AIR CONDITIONING SYSTEM

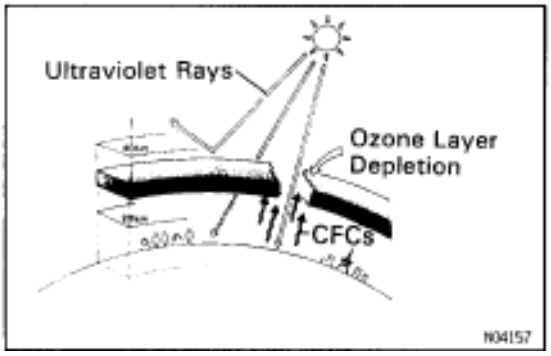

GENERAL DESCRIPTION

NEW AIR CONDITIONING SYSTEM WITH HFC134a

Refrigerant CFC 12 (R 12), previously used in automobiles' air conditioning systems is believed to contribute towards the depletion the earth's ozone layer. The ozone layer help to protect us against the harmful ultraviolet rays of the sun.



A newly developed refrigerant, HFC 134a (R 134 a), does not the destroy the ozone layer.

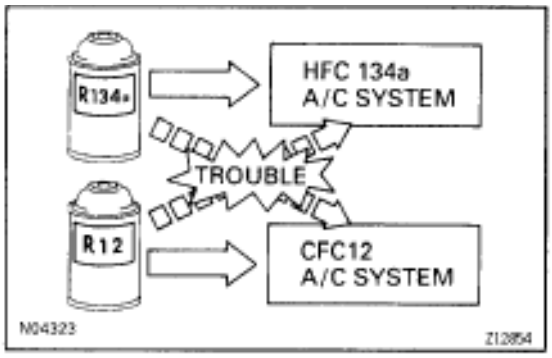

PRECAUTIONS FOR SERVICING HFC134a AIR CONDITIONINGS

1. USE OF NEW REFRIGERANT HFC134a

The very different characteristics of refrigerants HFC134a and CFC12 have determined the design of their respective air conditioning systems. Under no circumstances allow CFC12 to enter an HFC134a system, or vice versa, because serious damage could occur.



2. USE OF PROPER COMPRESSOR OIL

Compressor oil used in conventional CFC12 air conditioning systems cannot be used in HFC134a air conditioning systems.

Always use genuine Toyota R134a air conditioning oil ND–OIL 8, made expressly for use with HFC134a.

NOTICE: Compressor oil (ND–OIL 8) for HFC134a use adversely affects acrylic resin, so take care not to spill or spray any compressor oil.

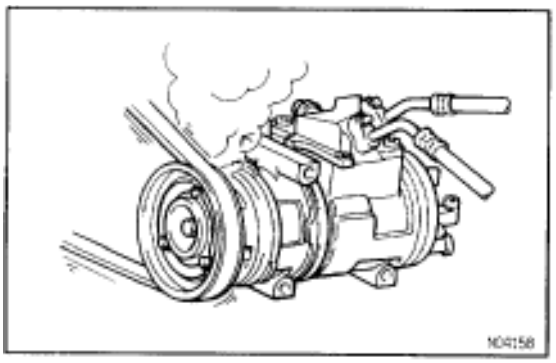

If even a small amount of the wrong oil is changed, it will result in clouding of the refrigerant.

A large amount will cause the compressor to seize up.

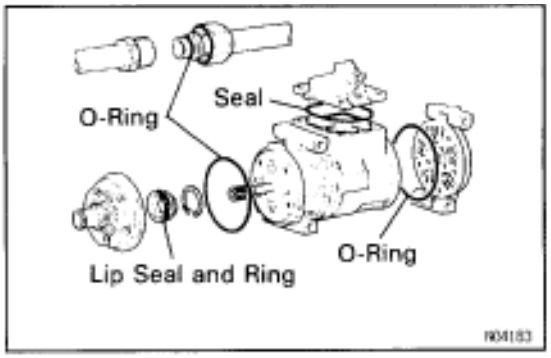

3. USE OF PROPER O–RINGS AND SEALS

O–rings and seals used for conventional CFC12 air conditioning systems cannot be used for HFC134a air conditioning systems.

Always use genuine Toyota HFC134a system O–rings and seals for HFC134a air conditioning systems.

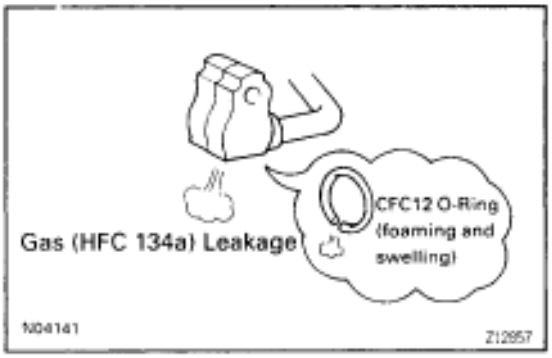

If O–rings and/or seals for CFC12 air conditioning systems are used by mistake in the connections of an HFC134a air conditioning system, the O–ring and seals will foam and swell resulting in leakage of refrigerant.

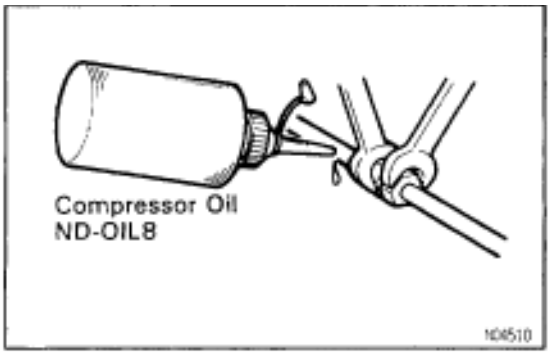

4. TIGHTEN CONNECTING PARTS SECURELY

Securely tighten the connecting parts to prevent leaking of refrigerant gas.

- Apply a few drops of compressor oil to O–ring fittings for easy tightening and to prevent leaking of refrigerant gas.

CAUTION: Apply only ND–OIL 8 compressor oil.

- Tighten the nuts using 2 wrenches to avoid twisting the tube.
- Tighten the O–ring fittings or the bolted type fittings to the specified torque.

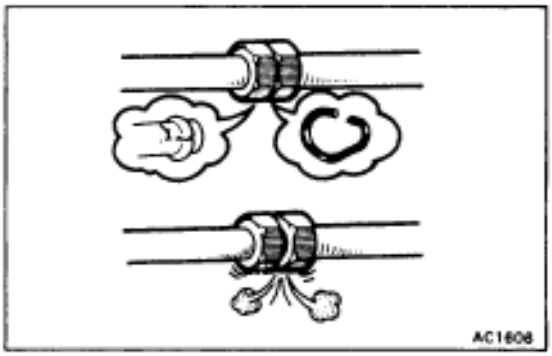

5. INSERT PLUG IMMEDIATELY IN DISCONNECTED PARTS

Insert a plug immediately in the disconnected parts to prevent the ingress of moisture and dust.

6. DO NOT REMOVE PLUG FROM NEW PARTS UNTIL IMMEDIATELY BEFORE INSTALLATION

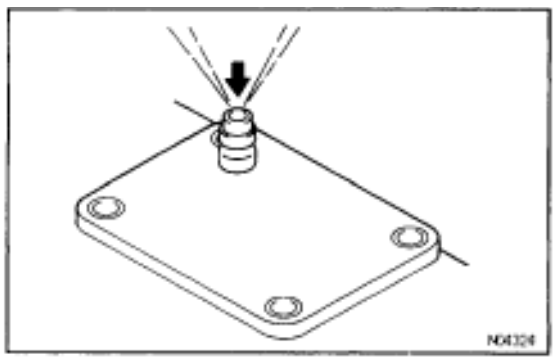

7. DISCHARGE GAS IN NEW COMPRESSOR FROM CHARGING VALVE BEFORE INSTALLING IT

If the gas in the new compressor is not discharged first, compressor oil will spray out with gas when the plug is removed.

SERVICE TOOLS FOR HFC134a AIR CONDITIONING

When servicing HFC134a air conditioning systems always use the HFC134a dedicated manifold gauges, gas leak detector and vacuum pump adaptor.

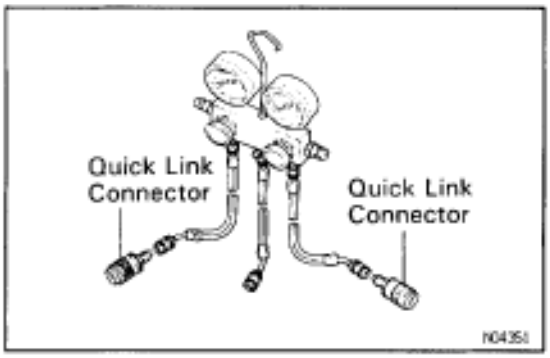

1. USE MANIFOLD GAUGES FOR HFC134a AIR CONDITIONING

Always use HFC134a dedicated manifold gauges to prevent CFC 12 and CFC 12 compressor oil contaminating the HFC134a system.

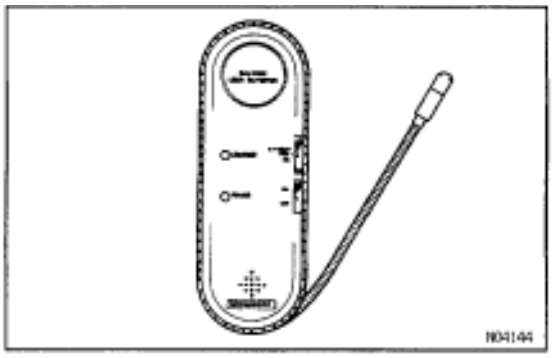

2. USE HFC134a GAS LEAK DETECTOR

Similarly, always use an HFC134a dedicated leak detector. The CFC12 leak detector is not sufficiently sensitive.

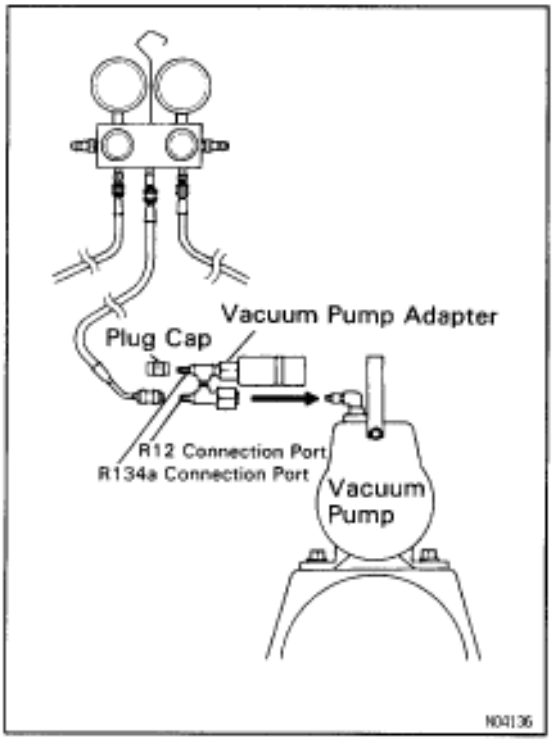

3. USE VACUUM PUMP ADAPTER

By connecting a vacuum pump adapter, the vacuum pump can be used for both HFC134a and CFC12 air conditioning systems.

The vacuum pump adaptor has an internal magnetic valve. When evacuation is completed and the vacuum pump switch is turned off, the magnetic valve opens allowing the introduction atmospheric air into the manifold gauges to prevent the back flow of oil from the vacuum pump into the gauge hose.

CAUTION:

Be sure to turn off the manifold gauge valve immediately after evacuating the system. Then you may switch off the vacuum pump. If this order is reversed, the line will be temporarily open to atmosphere.

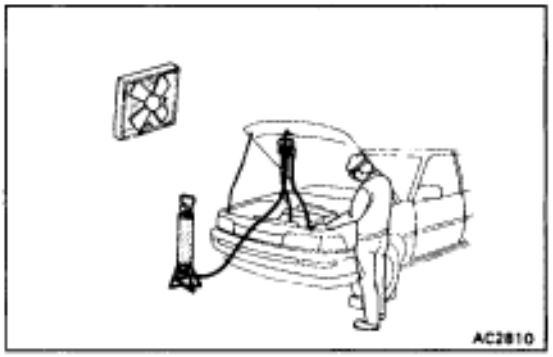

HANDLING PRECAUTIONS FOR REFRIGERANT

1. **DO NOT HANDLE REFRIGERANT IN AN ENCLOSED AREA OR NEAR AN OPEN FLAME**
2. **ALWAYS WEAR EYE PROTECTION**

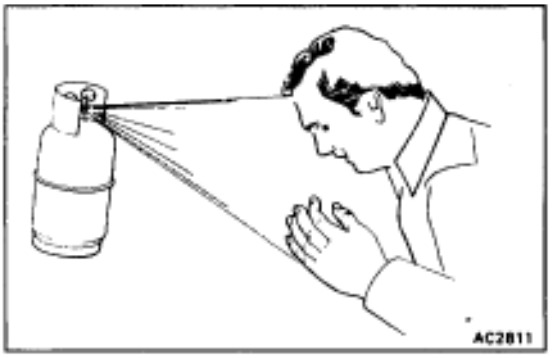

3. **BE CAREFUL THAT LIQUID REFRIGERANT DOES NOT GET IN YOUR EYES OR ON YOUR SKIN**

   If liquid refrigerant gets in your eyes or on your skin:

(a) Wash the area with lots of cool water.
   CAUTION: Do not rub your eyes or skin.
(b) Apply clean petroleum jelly to the skin.
(c) Go immediately to a physician or hospital for professional treatment.

HANDLING PRECAUTIONS FOR REFRIGERANT CONTAINER

1. **NEVER HEAT CONTAINER OR EXPOSE IT TO NAKED FLAME**
2. **BE CAREFUL NOT TO DROP CONTAINER AND NOT TO APPLY PHYSICAL SHOCKS TO IT**

CHARGING AND LEAK–CHECK METHODS

Evacuate the refrigeration system according to the following procedures.

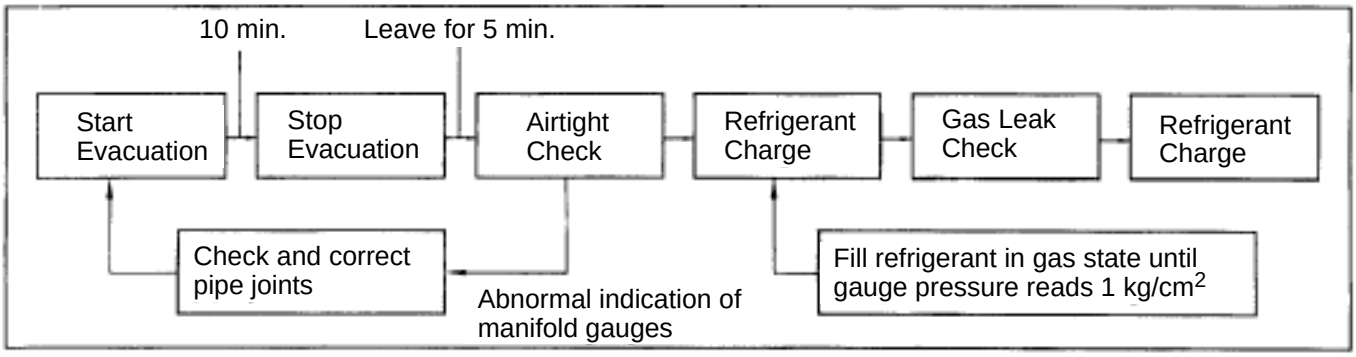

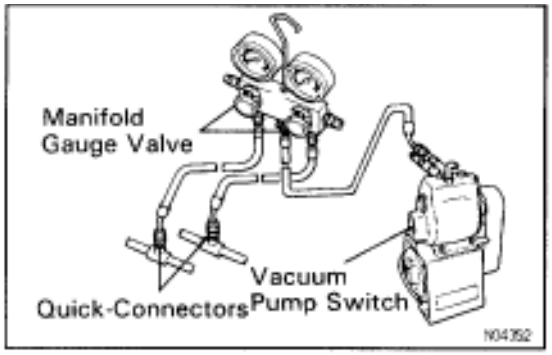

CAUTION:

- **Be sure to connect both the high and low pressure quick–connectors onto the A/C system when evacuating. If only one side is connected, the system would be open to atmosphere through the other connector, making it impossible to maintain vacuum.**
- **Be sure to turn off the manifold gauge valve immediately after evacuating the system. Then you may switch off the vacuum pump.**

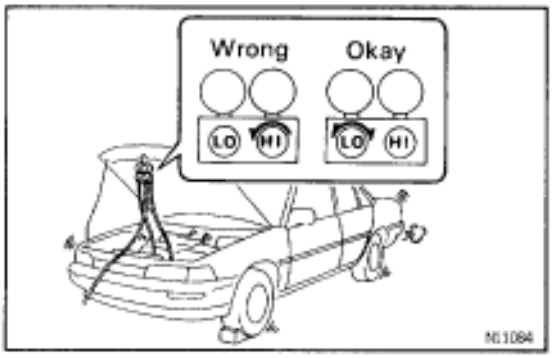

PRECAUTIONS WHEN CHARGING REFRIGERANT

1. **DO NOT OPERATE COMPRESSOR WITHOUT ENOUGH REFRIGERANT IN REFRIGERANT SYSTEM**
   If there is not enough refrigerant in the refrigerant system, oil lubrication will be insufficient and compressor burnout may occur, so take care to avoid this.
2. **DO NOT OPEN HIGH PRESSURE MANIFOLD VALVE WHILST COMPRESSOR IS OPERATING**
   If the high pressure valve is opened, refrigerant flows in the reverse direction and could cause the charging cylinder to rupture, so open and close the low pressure valve only.
3. **BE CAREFUL NOT TO OVERCHARGE SYSTEM WITH REFRIGERANT**
   If refrigerant is overcharged, it causes problems such as insufficient cooling, poor fuel economy, engine overheating etc.

SUPPLEMENTAL RESTRAINT SYSTEM (SRS)

Failure to carry out service operations in the correct sequence could cause the supplemental restraint system to deploy, possibly leading to a serious accident.
During removal or installation of the parts and the yellow wire harness and connector for the airbag is necessary, refer to the precautionary notices in the RS section before carrying out operation.

DESCRIPTION

PARTS LOCATION

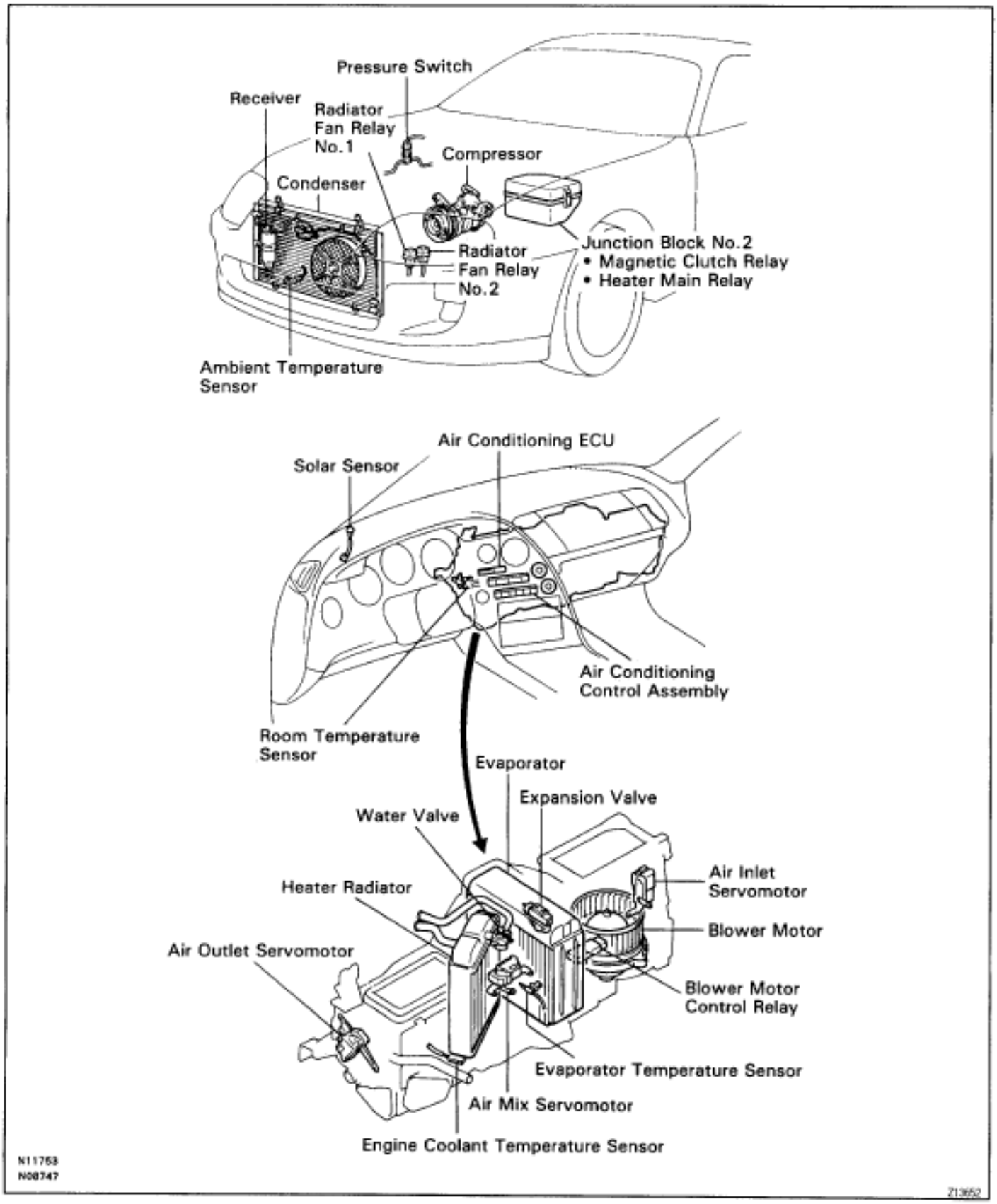

DAMPERS OPERATION

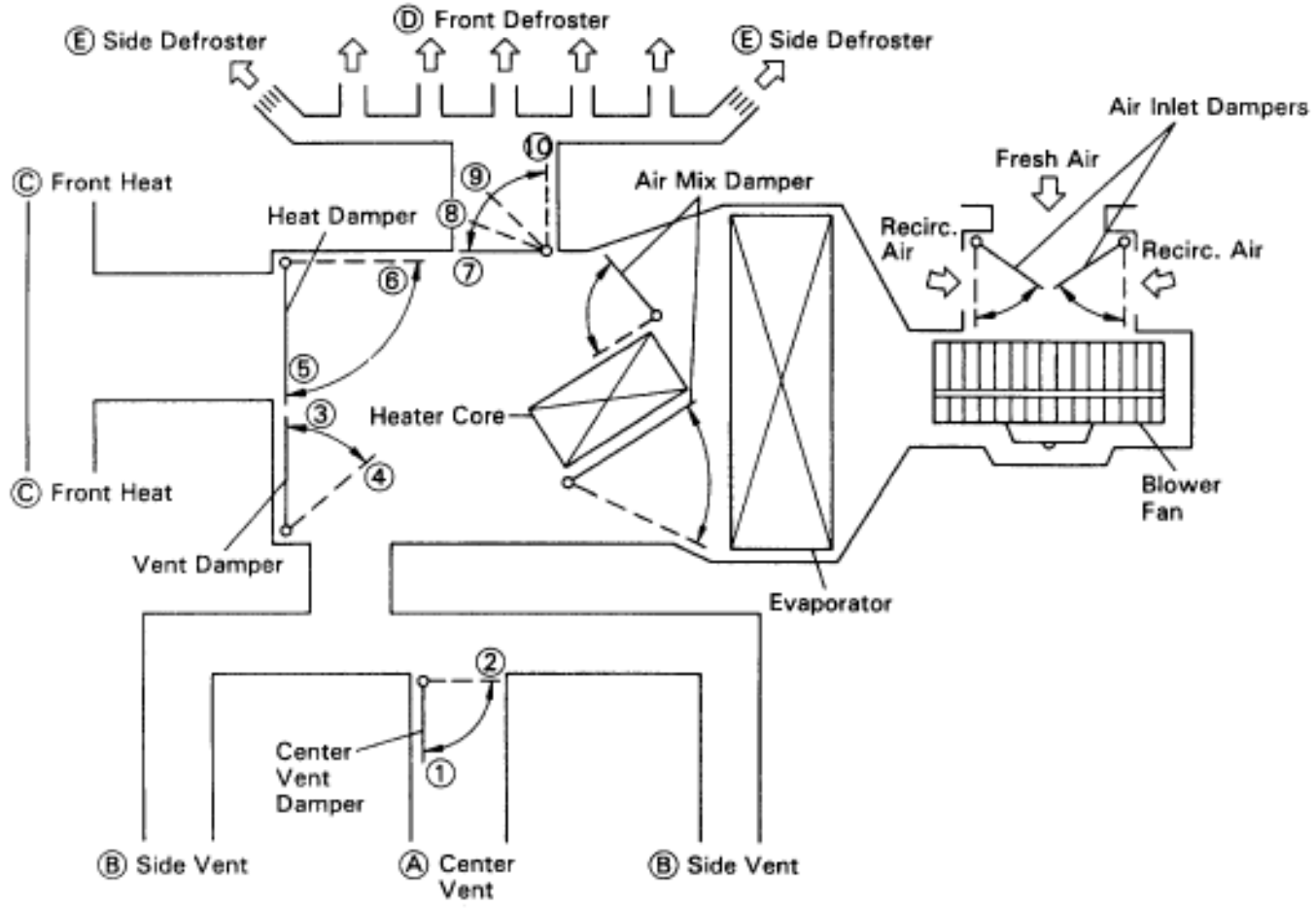

Mode		Mode Control Damper Position	Vent		Heat	Def.	
			Ⓐ Center	Ⓑ Side	Ⓒ Front	Ⓓ Front	Ⓔ Side
Face		① ③ ⑤ ⑦	○	○			
Bi–Level		① ③ ⑥ ⑦	○	○	○		
Foot* I		② ④ ⑥ ⑧		○	○	○	○
Foot* II		② ④ ⑥ ⑦		○	○		
Foot/Def.		② ④ ⑥ ⑨		○	○	○	○
Def.		② ④ ⑤ ⑩		○		○	○

The size of the circle ○ indicates the proportion of air flow volume.

* Foot I indicates the status during automatic control and Foot II indicates the status during manual control.

NO8639
NO8640

209420

PREPARATION

SST (SPECIAL SERVICE TOOLS)

	07110–58060 Air Conditioner Service Tool Set	
	(07117–58060) Refrigerant Drain Service Valve	
	(07117–58070) T–Joint	
	(07117–58080) Quick Coupler	Discharge (diam. 16 mm)
	(07117–58090) Quick Coupler	Suction (diam. 16 mm)
	(07117–78050) Refrigerant Charging Gauge	
	(07117–88060) Refrigerant Charging Hose	Discharge (Red)
	(07117–88070) Refrigerant Charging Hose	Suction (Blue)
	(07117–88080) Refrigerant Charging Hose	Utility (Green)
	07112–66040 Magnetic Clutch Remover	
	07112–76060 Magnetic Clutch Stopper	
	07114–84020 Snap Ring Pliers	
	07116–38360 Gas Leak Detector Assembly	

RECOMMENDED TOOLS

	09082–00050 TOYOTA Electrical Tester Set ◆	

LUBRICANT

Item	Capacity	Classification
Compressor oil	–	ND–OIL 8 or equivalent
When replacing receiver	10 cc (0.34 fl.oz.)	
When replacing condenser	40 cc (1.4 fl.oz.)	
When replacing evaporator	40 cc (1.4 fl.oz.)	
When replacing compressor	140 cc (4.8 fl.oz.)	

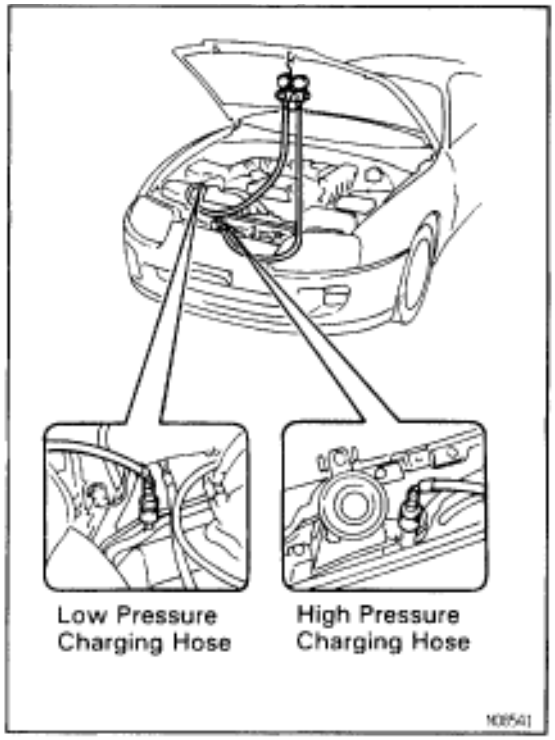

USE OF MANIFOLD GAUGE SET

MANIFOLD GAUGE SET INSTALLATION

1. **CONNECT CHARGING HOSES TO MANIFOLD GAUGE SET**
   Tighten the nuts by hand.
   CAUTION: Do not connect the wrong hoses.
2. **CONNECT QUICK CONNECTORS TO CHARGING HOSES**
   Tighten the nuts by hand.
3. **CLOSE BOTH HAND VALVES OF MANIFOLD GAUGE SET**
4. **REMOVE CAPS FROM SERVICE VALVES ON REFRIGERANT LINE**

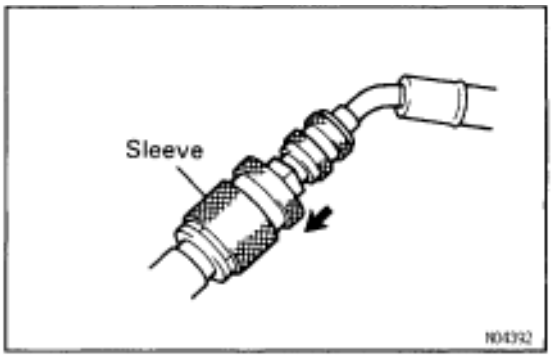

5. **CONNECT QUICK CONNECTORS TO SERVICE VALVES**
   HINT: Push the quick connector onto the service valve, then slide the sleeve of the quick connector downward to lock it.

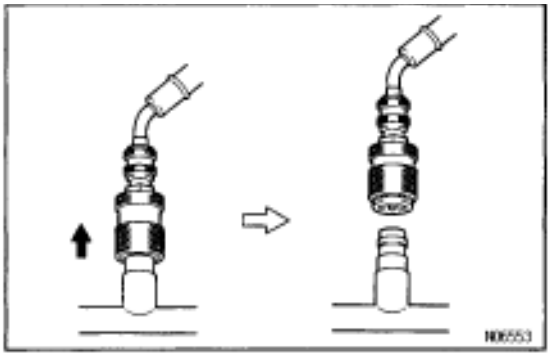

MANIFOLD GAUGE SET REMOVAL

1. **CLOSE BOTH HAND VALVES OF MANIFOLD GAUGE SET**
2. **DISCONNECT QUICK CONNECTORS FROM SERVICE VALVES ON REFRIGERANT LINE**
   HINT: Slide the sleeve of the quick connector upward to unlock the connector and remove it from the service valve.
3. **INSTALL CAPS TO SERVICE VALVES ON REFRIGERANT LINE**

–MEMO–

TROUBLESHOOTING

HOW TO PROCEED WITH TROUBLESHOOTING

Perform troubleshooting in accordance with the procedure on the following page.

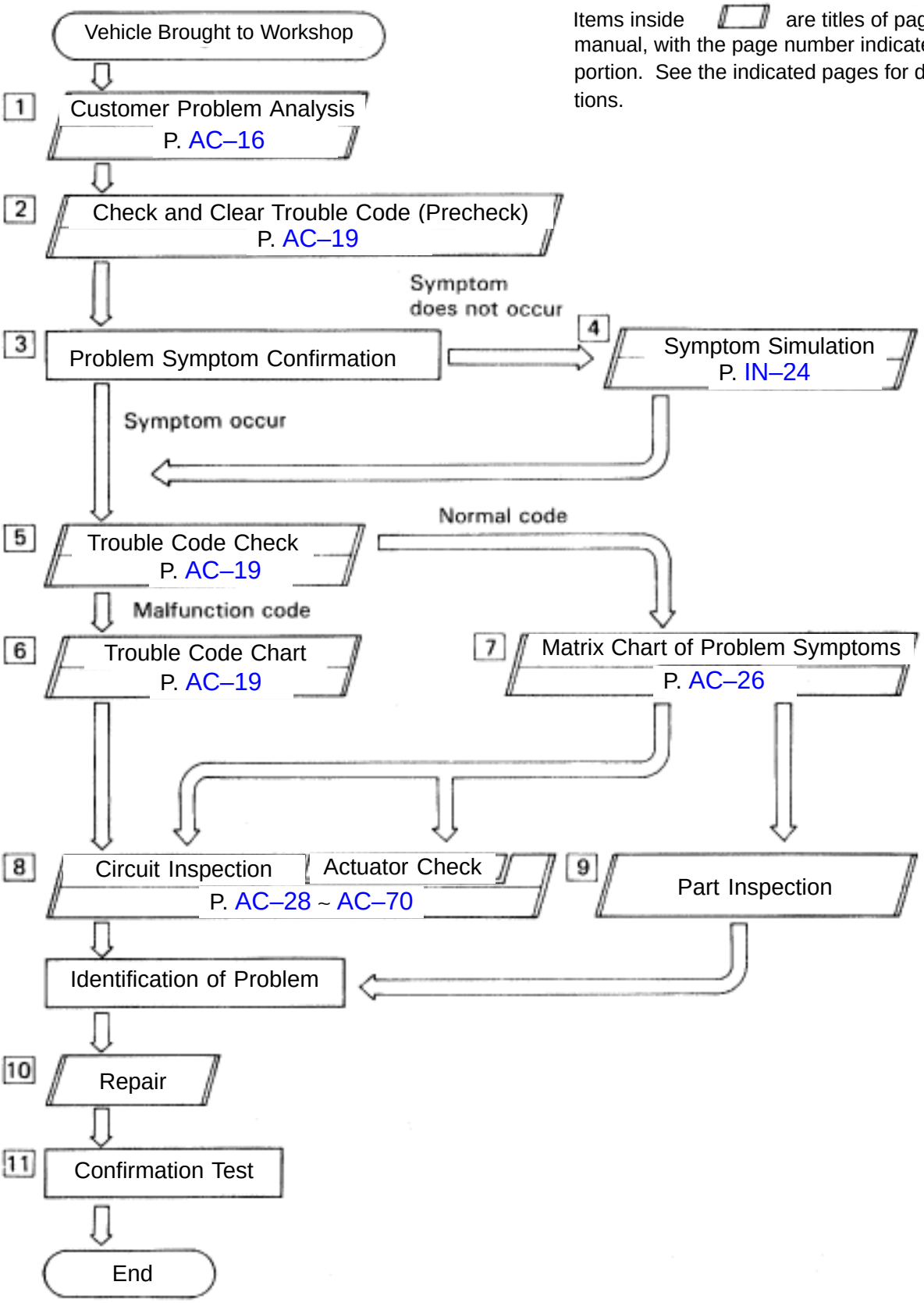

Items inside ▭ are titles of pages in this manual, with the page number indicated in the bottom portion. See the indicated pages for detailed explanations.

CUSTOMER PROBLEM ANALYSIS CHECK SHEET

AIR CONDITIONING SYSTEM Check Sheet

Inspector's Name :

Customer's Name		Registration No.	
		Registration Year	/ /
		Frame No.	
Date Vehicle Brought In	/ /	Odometer Reading	Km Miles

Date of Problem First Occurred	/ /
How Often does Problem Occur?	☐ Continuous ☐ Intermittent (times a day)
Weather	☐ Fine ☐ Cloudy ☐ Snowy ☐ Various/Other
Outdoor Temperature	☐ Hot ☐ Warm ☐ Cool ☐ Cold (Approx. °F °C)

Symptoms	Air Flow Control is Faulty	☐ Blower motor does not operate ☐ Blower motor speed does not change (Always Hi, Always Med, Always Lo)
	Temperature Control is Faulty	☐ Cabin temperature does not go down ☐ Cabin temperature does not rise ☐ Response is slow
	Air Inlet Control is Faulty	☐ Cannot change between FRS and REC (Always Fresh or always Recirculating)
	Vent Control is Faulty	☐ Mode will not change ☐ Will not enter the desired mode

Trouble Code Check	1st Time	☐ Normal Code	☐ Malfunction Code (Code)
	2nd Time	☐ Normal Code	☐ Malfunction Code (Code)

PANEL DIAGNOSIS SYSTEM

If a trouble occurs in A/C system, the specified lamp on the control panel starts blinking during the diagnostic sensor check.

During system diagnosis, a trouble is indicated on the panel by the blinking of a specified light instead of a code display. (See TROUBLE CODE CHART)

For example, when a trouble occurs in solar sensor circuit, the LED for DEF mode switch will be blinking during the diagnostic sensor check.

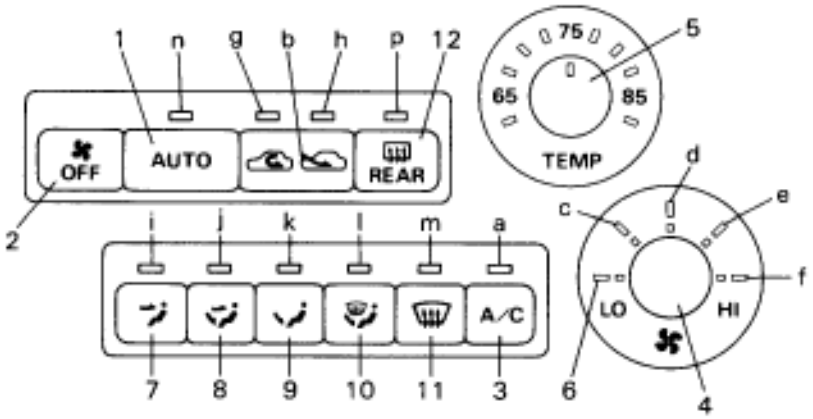

SWITCH

NO	SWITCH NAME	CODE
1	AUTO switch	AUTO
2	OFF switch	OFF
3	A/C switch	A/C
4	Fan speed dial	FAND

NO	SWITCH NAME	CODE
5	Temp. set dial	TSET
6	Recirc/Fresh switch	R/F
7	FACE mode switch	FACE
8	Bi-Level mode switch	B/L

NO	SWITCH NAME	CODE
9	FOOT mode switch	FOOT
10	FOOT/DEF mode switch	F/D
11	DEF mode switch	DEF
12	Rear Defogger switch	RDEF

LED

NO	INDICATOR NAME	CODE
a	A/C	L-A/C
b	Fan speed: LO	L-LO
c	Fan speed: Medium 1	L-M1
d	Fan speed: Medium 2	L-M2
e	Fan speed: Medium 3	L-M3

NO	INDICATOR NAME	CODE
f	Fan speed: HI	L-HI
g	RECIRCLE	L-REC
h	FRESH	L-FRS
i	FACE	L-FACE
j	BI-LEVEL	L-B/L

NO	INDICATOR NAME	CODE
k	FOOT	L-FOOT
l	FOOT/DEF	L-F/D
m	DEF	L-DEF
n	Mode AUTO/AUTO	L-AUTO
p	Rear Defogger	L-RDEF

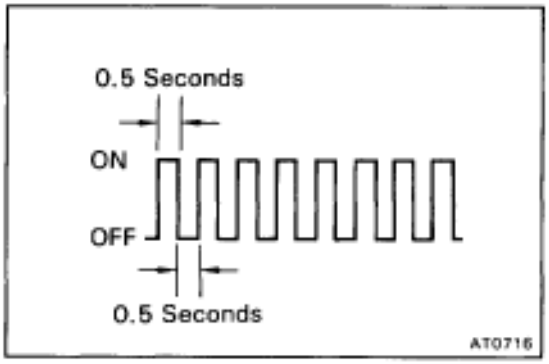

Warning for A/C compressor lock

If compressor lock occurs during air conditioning operation, the [A/C] switch indicator on the air conditioning control assembly starts blinking.
When this occurs, check for compressor lock using panel diagnosis check then proceed to inspect the circuit or the component.
Compressor lock sensor circuit → page AC–38

LIST OF OPERATION METHODS

By operating each of the air conditioning control switches as shown in the diagram below, it is possible to enter the diagnosis check mode.

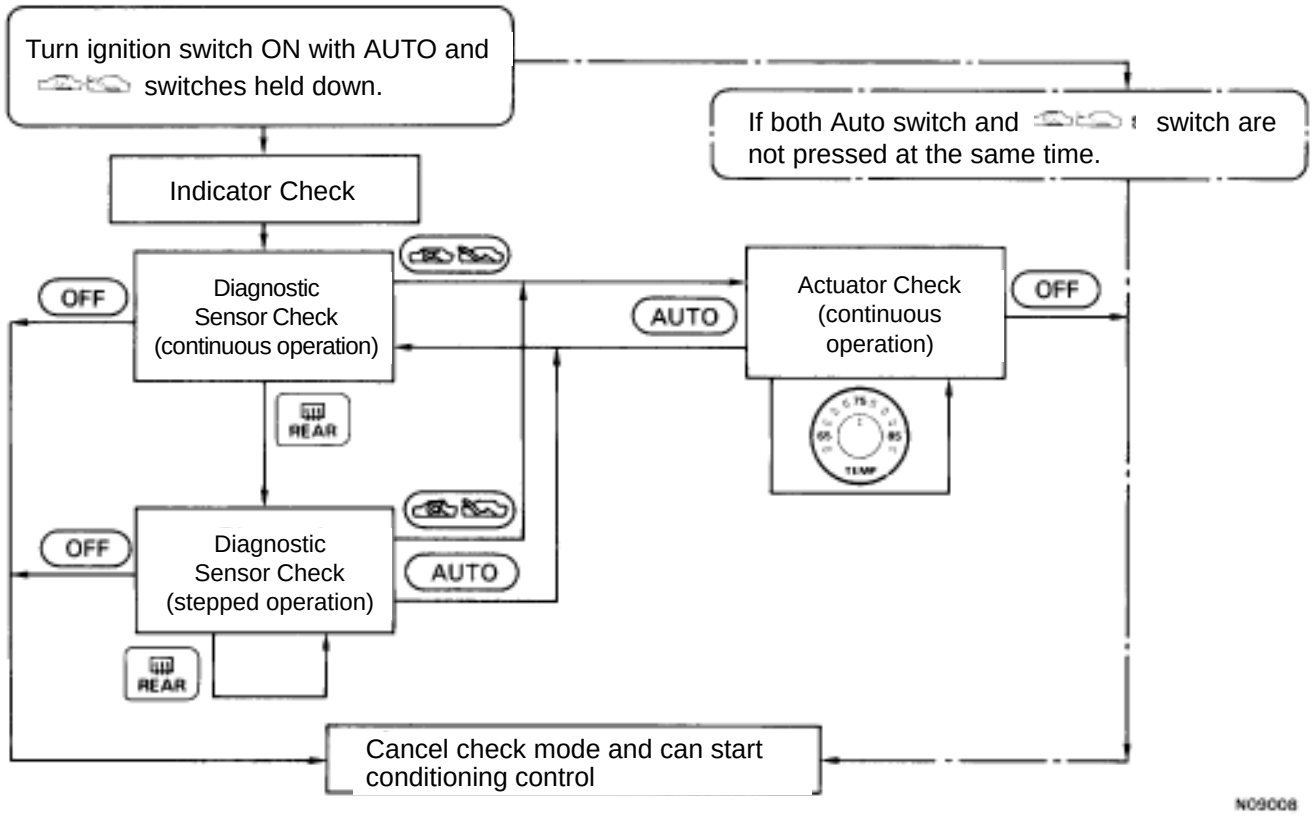

: Indicates a switch operation

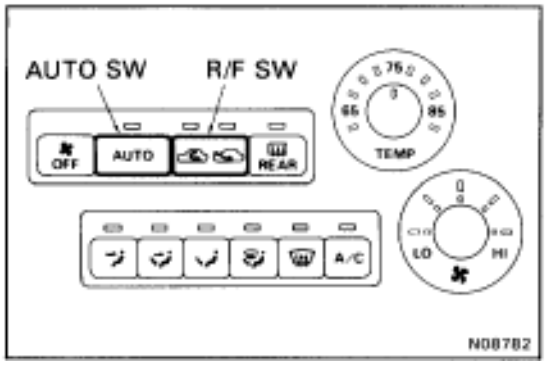

INDICATOR CHECK

1. Turn the ignition switch on while pressing the air conditioning control AUTO switch and R/F SW simultaneously.

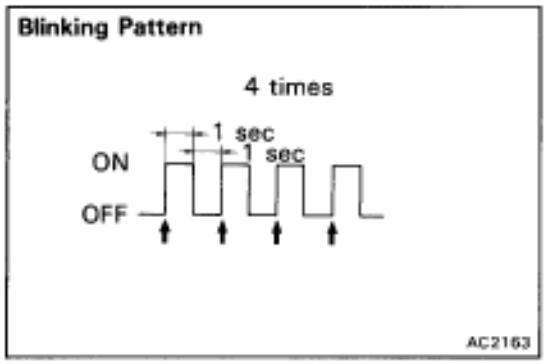

2. **Check that all the indicators light up and go off at 1 second intervals 4 times in succession.**
   HINT:
   - After the indicator check is ended, the diagnostic sensor check begins automatically.
   - Press the OFF switch when cancelling the check mode.

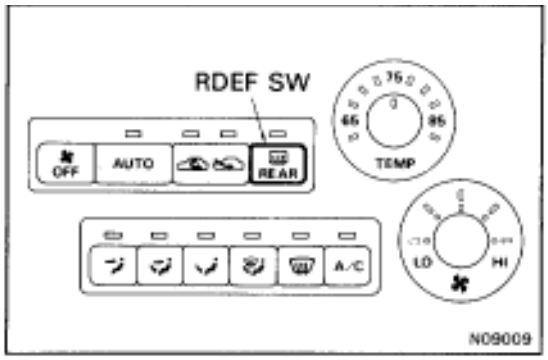

DIAGNOSTIC SENSOR CHECK

1. Perform an indicator check. After the indicator check is completed, the system enters the diagnostic sensor check mode automatically.
2. Check the LED blinking on the panel. Refer to the list of codes on page AC–20 when translating the trouble code from the LED blinking.
   If the slower display is desired, press the RDEF switch and change it to step operation. Each time the RDEF switch is pressed, the blinking LED changes by 1 step.

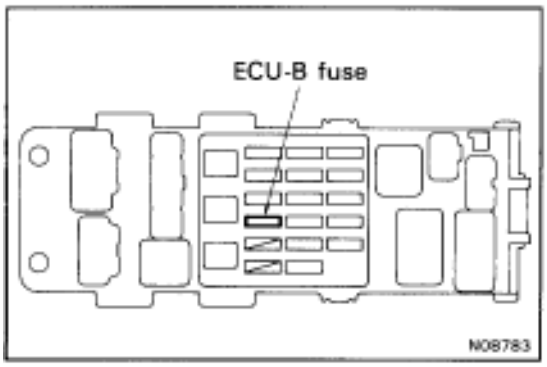

CLEARING TROUBLE CODES' MEMORY

Method 1:

1. Pull out the ECU–B fuse in Junction Block No. 1 for 10 sec. or longer to clear the trouble codes' memory.
2. After reinserting the fuse, check that the normal code is output.

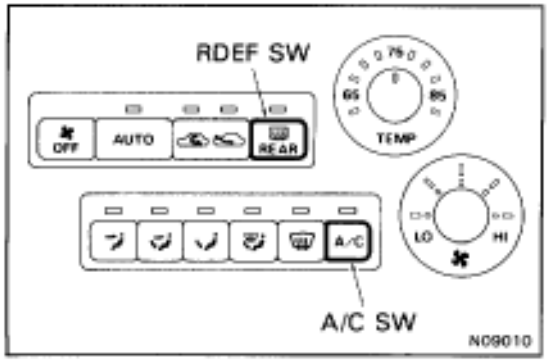

Method 2:

Press the RDEF switch while pushing the A/C switch during the sensor check mode.

–MEMO–

SENSOR CHECK TROUBLE CODE CHART

If a LED is blinking during the diagnostic sensor check, check the circuit listed for the code in the table below (Proceed to the page given for that circuit.)

No.	Blinking LED	Detecting Condition
0	L–AUTO	• Normal
1	L–FACE*1	• Open or short in room temperature sensor circuit.
2	L–B/L	• Open or short in ambient temperature sensor circuit.
3	L–FOOT	• Open or short in evaporator temperature sensor circuit.
4	L–F/D*2	• Open or short in engine coolant temperature sensor circuit.
5	L–DEF*3	• Open in solar sensor circuit. • Short in solar sensor circuit.
6	L–A/C*4	• All conditions below are detected for 3 secs. or more. (a) Engine speed 450 rpm or more. (b) Ratio between engine and compressor rpm deviates 20% or more in comparison to normal operation.
7	L–FRS	• Open in pressure sensor circuit. • Abnormal refrigerant pressure [below 196 kPa (2.0 kgf/cm^2, 28 psi) over 3,140 kPa (32.0 kgf/cm^2, 455 psi)]
8	L–REC	• Short to ground or power source circuit in air mix damper position sensor circuit.
9	L–LO	• Short to ground or power source circuit in air outlet damper position sensor circuit.
10	L–M2	• Air mix damper position sensor value does not change even if A/C amplifier signals the air mix damper control servo motor to operate.
11	L–HI	• Air outlet damper position sensor value does not change even if A/C amplifier signals the air outlet damper control servo motor to operate.

HINT: *1 If the room temp. is approx. –20˚C (–4˚F) or lower, FACE light may blink even though the system is normal.

*2 If the ambient temperature is approx. –50˚C (–58˚F) or lower, the B/L light may blink even though the system is normal.

*3 If the check is being performed in a dark place, the LED for DEF (solar sensor circuit abnormal) could be blinking.

In this case, perform diagnostic sensor check again while shining a light, such as an inspection light, on the solar sensor.

If the light is still blinking, there could be trouble in the solar sensor circuit.

Trouble Area	Memory*5	See page
—	—	
• Room temp. sensor • Harness or connector between room temp. sensor and A/C amplifier • A/C amplifier	○ (8.5 min. or more)	AC–28
• Ambient temp. sensor • Harness or connector between ambient temp. sensor and A/C amplifier • A/C amplifier	○ (8.5 min. or more)	AC–30
• Evaporator temp. sensor • Harness or connector between evaporator temp. sensor and A/C amplifier • A/C amplifier	○ (8.5 min. or more)	AC–32
• Engine coolant temp. sensor • Harness or connector between coolant temp. sensor and A/C amplifier • A/C amplifier	○ (8.5 min. or more)	AC–34
• Solar sensor • Harness or connector between sensor and A/C amplifier • A/C amplifier	— ○ (8.5 min. or more)	AC–36
• Compressor drive belt • Compressor lock sensor • Compressor • Harness and connector between A/C amplifier and compressor, compressor lock sensor • A/C amplifier	—	AC–38
• Pressure switch • Harness or connector between pressure switch and A/C amplifier • Refrigerant pipe line • A/C amplifier	—	AC–40
• Air mix damper position sensor • A/C amplifier • Harness or connector between air mix damper position sensor and A/C amplifier	○ (1 min. or more)	AC–42
• Air outlet damper position sensor • A/C amplifier • Harness or connector between max cool damper position sensor and A/C amplifi-	○ (1 min. or more)	AC–48
• Air mix damper control servo motor • Air mix damper position sensor • Harness and connector between A/C amplifier and air mix position sensor • Harness and connector between A/C amplifier and air mix damper control servo motor • A/C amplifier	○ (15 secs. or more)	AC–42 AC–44
• Air outlet damper control servo motor • Air outlet damper position sensor • Harness and connector between A/C amplifier and air outlet position sensor • Harness and connector between A/C amplifier and air outlet damper motor • A/C amplifier	○ (15 secs. or more)	AC–48 AC–50

HINT: *4 Compressor lock (A/C light blink) is indicated only for a current malfunction. (See page AC–38)

To confirm the trouble indication, perform the following steps.
(1) With the engine ON, enter the trouble code check mode.
(2) Press the R/F switch to enter actuator check mode, and set the operation to Step No. 3.
(3) Press the AUTO switch to return to diagnostic sensor check mode.
(4) The A/C light starts to blink after approx. 3 secs.

*5 The A/C amplifier memorizes the trouble code of the respective malfunction when it occurs for period of time indicated in the brackets.

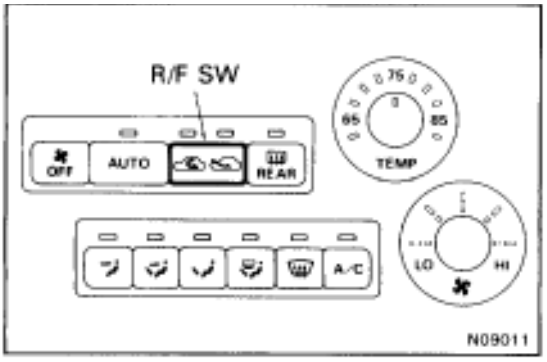

ACTUATOR CHECK

1. After entering the sensor check mode, press the R/F switch.
2. Turn the temperature set dial and change it to step operation. Each time the dial is turned, the actuator operation changes by 1 step.
   HINT:
   - Check the change of actuator operation visually and by hand.
   - To cancel the check mode, press the OFF switch.

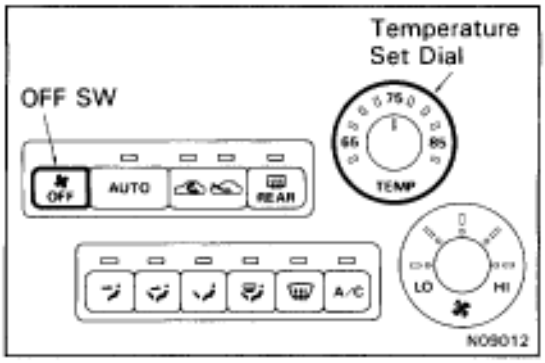

Step No.	Set Temperature ˚C (˚F)	Conditions				
		Blower Motor	Air Flow vent	Air Inlet damper	Magnetic clutch	Air mix damper
1	Below 20 (68)	OFF	(FACE)	(RECIRC)	OFF	Cool side (0% open)
2	20 ~ 23 (68 ~ 73)	LO	(BI-LEVEL)	(R/F)	ON	Cool/Hot (50% open)
3	23 ~ 27 (74 ~ 80)	M2	(FOOT)	(FRESH)	↑	Hot side (100% open)
4	27 ~ 30 (81 ~ 86)	↑	(FOOT/DEF)	↑	↑	↑
5	Over 30 (87)	HI	(DEF)	↑	↑	↑

A C AMPLIFIER TERMINAL STANDARD VALUE

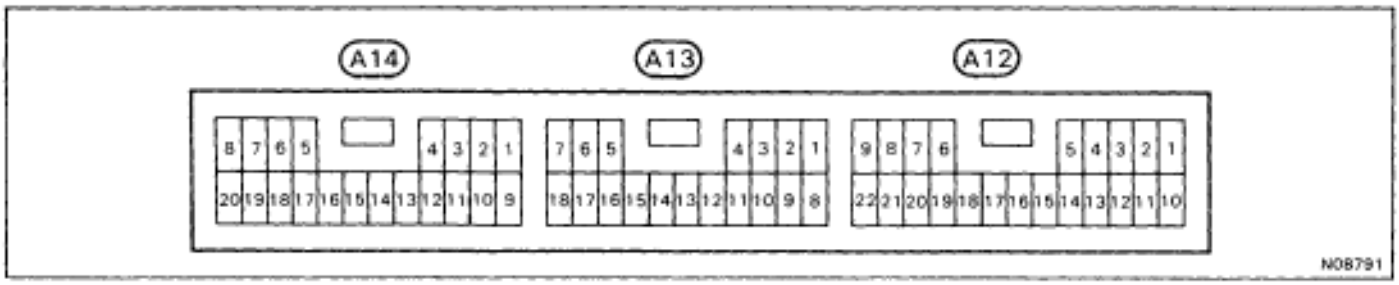

Terminal No.	Symbol	Tester Connection	Wiring Color	Condition	Standard Value
A12-1	L-B/L	A12-1↔A14-9	BR-W↔W-B	IG ON. B/L mode switch: OFF→ON	10 – 14 V → Below 1.0 V
A12-2	L-FACE	A12-2↔A14-9	G↔W-B	IG ON. FACE mode switch: OFF→ON	10 – 14 V → Below 1.0 V
A12-3	L-M1	A12-3↔A14-9	P-B↔W-B	IG ON. Fan speed dial: LO→M1	10 – 14 V → Below 1.0 V
A12-4	L-DEF	A12-4↔A14-9	R-Y↔W-B	IG ON. DEF mode switch: OFF→ON	10 – 14 V → Below 1.0 V
A12-6	L-AUTO	A12-6↔A14-9	R-B↔W-B	IG ON. AUTO switch: OFF→ON	10 – 14 V → Below 1.0 V
A12-7	A/C-IN	A12-7↔A14-9	L↔W-B	IG ON. A/C compressor: ON→OFF	10 – 14 V → Below 1.0 V
A12-8	MDEF	A12-8↔A14-9	Y-L↔W-B	IG ON. Mode control switch: FACE→DEF	Below 1.0 V → 10 – 14 V
A12-9	MFAC	A12-9↔A14-9	W↔W-B	IG ON. Mode control switch: DEF→FACE	Below 1.0 V → 10 – 14 V
A12-10	L-F/D	A12-10↔A14-9	BR↔W-B	IG ON. F/D mode switch: OFF→ON	10 – 14 V → Below 1.0 V
A12-11	L-FOOT	A12-11↔A14-9	Y↔W-B	IG ON. FOOT mode switch: OFF→ON	10 – 14 V → Below 1.0 V
A12-12	L-HI	A12-12↔A14-9	LG↔W-B	IG ON. Fan speed dial: LO→HI	10 – 14 V → Below 1.0 V
A12-13	L-LO	A12-13↔A14-9	R↔W-B	IG ON. Fan speed dial: HI→LO	10 – 14 V → Below 1.0 V
A12-14	L-M2	A12-14↔A14-9	B-W↔W-B	IG ON. Fan speed dial: LO→M2	10 – 14 V → Below 1.0 V
A12-15	L-M3	A12-15↔A14-9	P↔W-B	IG ON. Fan speed dial: LO→M3	10 – 14 V → Below 1.0 V
A12-16	L-RDEF	A12-16↔A14-9	V↔W-B	IG ON. Rear DEF switch: OFF→ON	10 – 14 V → Below 1.0 V
A12-17	L-REC	A12-17↔A14-9	LG-B↔W-B	IG ON. REC mode switch: OFF→ON	10 – 14 V → Below 1.0 V
A12-18	L-FRS	A12-18↔A14-9	GR↔W-B	IG ON. FRS mode switch: OFF→ON	10 – 14 V → Below 1.0 V
A12-19	L-A/C	A12-19↔A14-9	B↔W-B	IG ON. A/C switch: OFF→ON	10 – 14 V → Below 1.0 V
A12-20	ACC	A12-20↔A14-9	L-R↔W-B	Turn ignition switch ACC	10 – 14 V
A12-21	IGN	A12-21↔A14-9	B-W↔W-B	Start the engine	Pulse signal
A12-22	LOCK-IN	A12-22↔A13-9	G-Y↔V-W	IG ON. A/C compressor: ON	Pulse signal
A13-1	MC	A13-1↔A14-9	R-Y↔W-B	Temperature set: MAX. HOT→MAX. COOL	Below 1.0 V → 10 – 14 V
A13-2	S5	A13-2↔A14-9	BR-W↔W-B	Always	4.5 – 5.5 V

Terminal No.	Symbol	Tester Connection	Wiring Color	Condition	Standard Value
A13-3	MH	A13-3↔A14-9	V↔W-B	Temperature set: MAX. COOL→MAX. HOT	Below 1.0 V → 10 – 14 V
A13-5	TR	A13-5↔A13-9	Y-L↔V-W	Cabin temp.: 25°C (77°F)/40°C (104°F)	1.8 – 2.2 V/ 1.2 – 1.6 V
A13-6	TAM	A13-6↔A13-9	P-B↔V-W	Cabin temp.: 25°C (77°F)/40°C (104°F)	1.3 – 1.8 V/ 0.8 – 1.3 V
A13-7	TE	A13-7↔A13-9	L-Y↔V-W	Evapo. Ambient Temp.: 0°C (32°F)/15°C (59°F)	2.0 – 2.4V/1.4 – 1.8V
A13-9	SG	A13-9↔Body GND	V-W↔Body GND	Always	Below 1 Ω
A13-11	SPD	A13-11↔A14-9	P↔W-B	Turn the propeller shaft slowly.	10 – 14 V→ Below 1.0 V
A13-14	PSW	A13-14↔A14-9	L-Y↔W-B	Normal A/C pressure	Below 1.0 V
A13-16	TW	A13-16↔A13-9	LG-R↔V-W	Engine coolant temp.: 0°C (32°F)/40°C (104°F)	2.8 – 3.2 V/ 1.8 – 2.2 V
				Engine coolant temp.: 70°C (158°F)	0.9 – 1.3 V
A13-17	TS	A13-17↔A13-9	Y-G↔V-W	Sensor subjected to electric light	0.8↔4.3 V
				Sensor covered by a cloth	Below 0.8 V
A13-18	TP	A13-18↔A13-9	G-W↔V-W	Temperature set: MAX. COOL→MAX. HOT	3.7 – 4.3 V→ 0.8 – 1.2 V
A14-6	MGC	A14-6↔A14-9	L-R↔W-B	A/C compressor: ON → OFF	Below 1.0 V → 10 – 14 V
A14-7	+B	A14-7↔A14-9	W-R↔W-B	Always	10 – 14 V
A14-8	IG	A14-8↔A14-9	R-L↔W-B	Turn ignition switch IG	10 – 14 V
A14-9	GND	A14-9↔Body GND	W-B↔Body GND	Always	Below 1Ω
A14-10	TPM	A14-10↔A13-9	LG↔V-W	IG ON. Mode control switch: FACE→DEF	3.7 V – 4.3 V → 0.8 – 1.2 V
A14-11	TSET	A14-11↔A13-9	L-B↔V-W	IG ON. Temperature set: MAX.HOT→MAX.COOL	Below 0.3 V→ Over 4.7 V
A14-15	BLW	A14-15↔A14-9	L↔W-B	IG ON. Fan speed: LO→HI	Approx. 1 V→ Approx. 2 V
A14-16	HR	A14-16↔A14-9	L-W↔W-B	IG ON. OFF switch: ON mode→ OFF mode Mode control switch: DEF	Below 1.0 V→ 10 – 14 V
A14-17	MR/F	A14-17↔A14-9	GR↔W-B	During cool-down on AUTO after hot soak	Below 1.0 V
A14-18	RDEF	A14-18↔A14-9	B↔W-B	IG ON. Rear DEF switch: OFF→ON	10 – 14 V→ Below 1.0 V*
A14-19	MREC	A14-19↔A14-9	G-R↔W-B	IG ON. Air inlet control switch: FRS→REC	10 – 14 V→ Below 1.0 V
A14-20	MFRS	A14-20↔A14-9	G↔W-B	IG ON. Air inlet control switch: REC→FRS	10 – 14 V→ Below 1.0 V

* After 15 minutes, ON mode will change to OFF mode automatically.

–MEMO–

MATRIX CHART OF PROBLEM SYMPTOMS

If a normal code is displayed during the diagnostic sensor check but the trouble still occurs, perform troubleshooting for each problem symptom, checking the circuits for each symptom in the order given in the table below (Proceed to the page given for each circuit).

See page / Suspect Area / Symptom		AC–28 Room temp. sensor circuit	AC–30 Ambient temp. sensor circuit	AC–32 Evaporator temp. sensor circuit	AC–34 Engine coolant temp. sensor circuit	AC–36 Solar sensor circuit	AC–38 Compressor lock sensor circuit	AC–40 Pressure switch circuit	AC–42 Air mix damper position sensor circuit	AC–44 Air mix damper control servo motor circuit	AC–46 Air inlet damper control servo motor circuit	AC–48 Air outlet damper position sensor circuit	AC–50 Air outlet damper control servo motor circuit
Whole functions of the A/C system does not operate.													
Air Flow Control	No blower operation				3								
	No blower control												
	Insufficient air flow												
Temperature Control	No cool air comes out	9	10	11	12		6	5	7	8			
	No warm air comes out	4	5	6					2	3			
	Output air is warmer or colder than the set temperature or response is slow	7	8	9	10	6			11	12	13		
	No temperature control (only Max. cool or Max. warm)	2	3						4	5			
No air inlet control											1		
No air outlet control												1	2
Engine idle up does not occur, or is continuous													
Blinking of A/C indicator							2						
Trouble code not recorded. Set mode is cleared when IG switch is turned off.													

HINT:

- If the instruction ”Proceed to next circuit inspection shown on matrix chart is given in the flow chart for each circuit, proceed to the circuit with the next highest number in the table to continue the check.
- If the trouble still reappears even though there are no abnormalities in any of the other circuits, then check or replace the A/C amplifier.

Backup power source circuit	IG power source circuit	ACC power source circuit	Heater relay circuit	Blower motor circuit	Compressor circuit	A/C control assembly circuit	Temperature set dial circuit	A/C amplifier	Refrigeration system inspection with manifold gauge set	Refrigerant volume	Drive belt tension	Electric cooling fan	Condenser	Receiver	Evaporator	Heater radiator	Expansion valve	Water valve
AC–52	AC–54	AC–56	AC–58	AC–60	AC–62	AC–66	AC–69	IN–35	AC–71	AC–76	AC–77	AC–107	AC–92	AC–91	AC–95	AC–96	AC–98	AC–97
	1	2						3										
			1	2				4										
				2		1		3										
				1		2		3										
					4	14	13	15	3	1	2							
						8	7	9										1
						20	19	21	3	1	2	4	14	15	16	17	18	5
						6	1	7										
						2		3										
						3		4										
					1			2										
					1			3										
1								2										

CIRCUIT INSPECTION

Blinking Light FACE Room Temperature Sensor Circuit

CIRCUIT DESCRIPTION

This sensor detects the temperature inside the cabin and sends the appropriate signals to the A/C amplifier.

Diagnostic Sensor Check Detecting Condition	Trouble Area
Open or short in room temperature sensor circuit.	• Room temperature sensor • Harness or connector between room temperature sensor and A/C amplifier • A/C amplifier

WIRING DIAGRAM

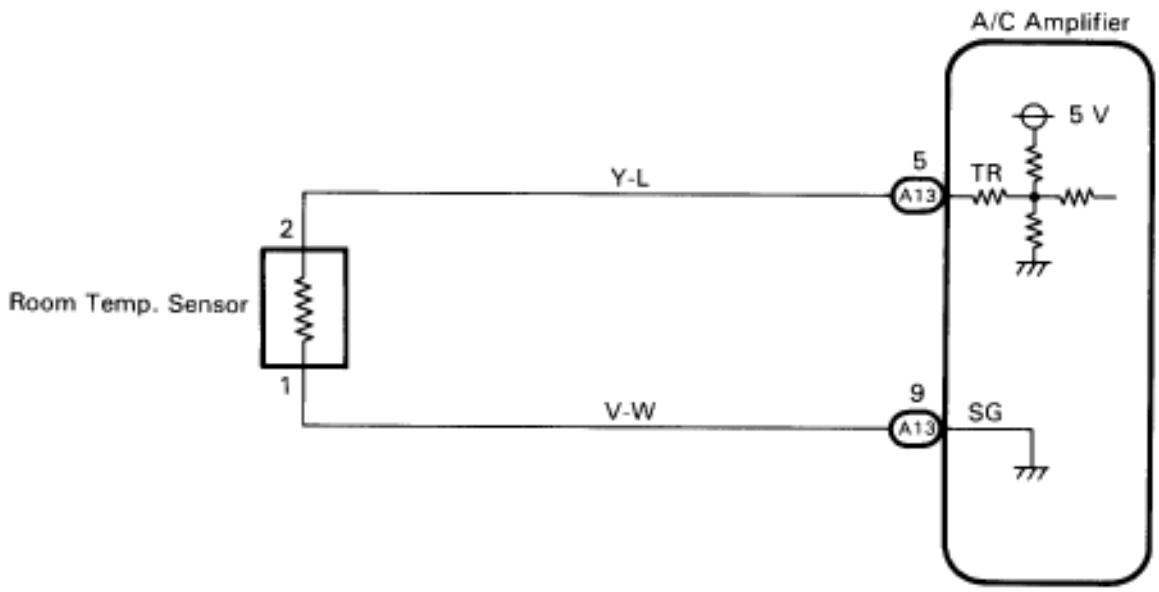

NO8776

INSPECTION PROCEDURE

1 Check voltage between terminals TR and SG of A/C amplifier connector.

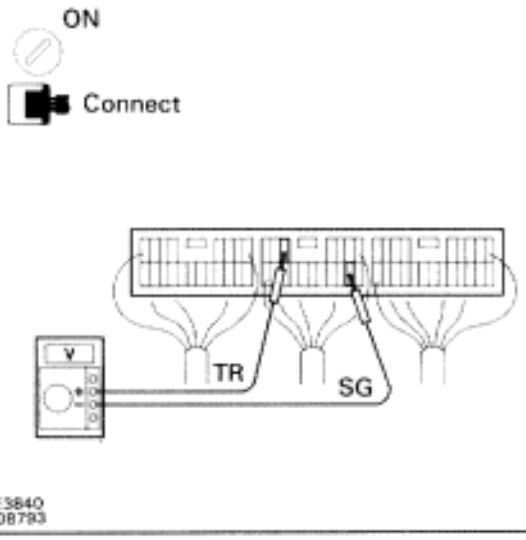

P Remove A/C amplifier with connectors still connected.

C
1. Turn ignition switch ON.
2. Measure voltage between terminal TR of SG of A/C amplifier connector at each temperature.

OK **Voltage:**
at 25˚C (77˚F): 1.8 ~ 2.2 V
at 40˚C (104˚F): 1.2 ~ 1.6 V

HINT: As the temperature increases, the voltage decreases gradually.

NG

OK → **Proceed to next circuit inspection shown on matrix chart (See page AC–26). However, if the light is still blinking, check and replace A/C amplifier.**

2 Check room temperature sensor.

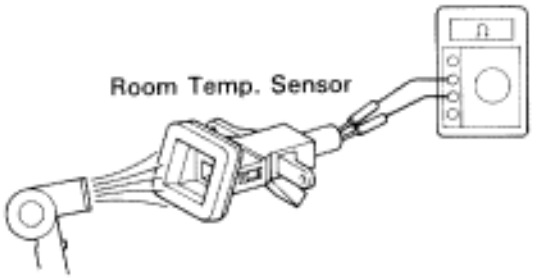

P
1. Remove instrument panel.
2. Disconnect room temperature sensor connector.

C Check resistance between terminals 1 and 2 of room temperature sensor connector.

OK **Resistance:**
at 25˚C (77˚F): 1.6 ~ 1.8 k

OK

NG → **Replace room temperature sensor.**

3 Check harness and connector between A/C amplifier and room temperature sensor (See page IN–30).

OK

NG → **Repair or replace harness or connector.**

Check and replace A/C amplifier.

Blinking Light B L Ambient Temperature Sensor Circuit

CIRCUIT DESCRIPTION

This sensor detects the ambient temperature and sends the appropriate signals to the A/C amplifier.

Diagnostic Sensor Check Detecting Condition	Trouble Area
Open or short in ambient temperature sensor circuit.	• Ambient temperature sensor • Harness or connector between ambient tempera–ture sensor and A/C amplifier • A/C amplifier

WIRING DIAGRAM

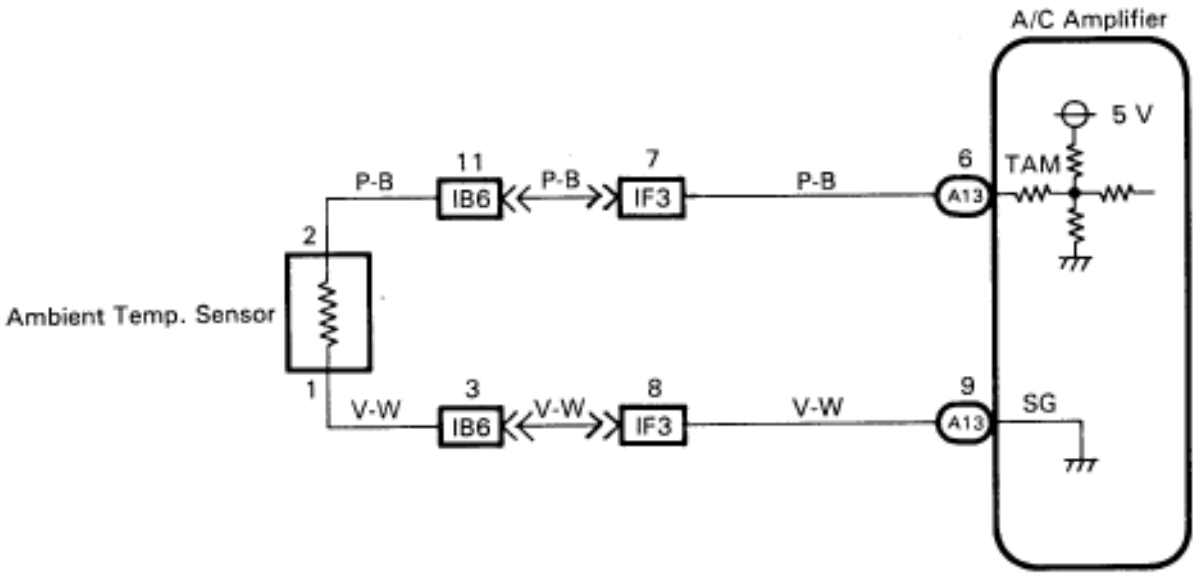

INSPECTION PROCEDURE

1 Check voltage between terminals TAM and SG of A/C amplifier connector.

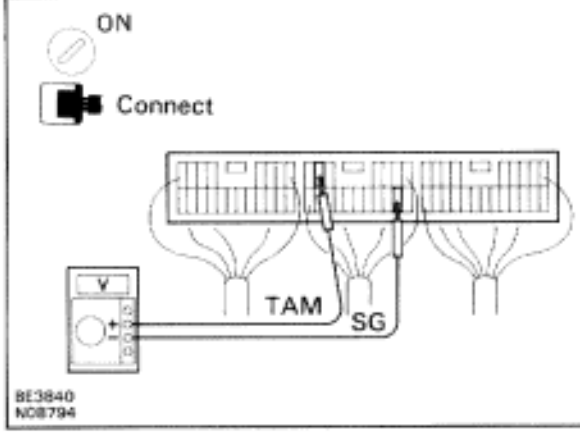

P Remove A/C amplifier with connectors still connected.

C
1. Turn ignition switch ON.
2. Measure voltage between terminal TAM of SG of A/C amplifier connector at each temperature.

OK **Voltage:**
at 25˚C (77˚F): 1.35 ~ 1.75 V
at 40˚C (104˚F): 0.85 ~ 1.25 V

HINT: As the temperature increases, the voltage decreases gradually.

NG

OK **Proceed to next circuit inspection shown on matrix chart (See page AC–26). However, if the light is still blinking, check and replace A/C amplifier.**

2 Check ambient temperature sensor.

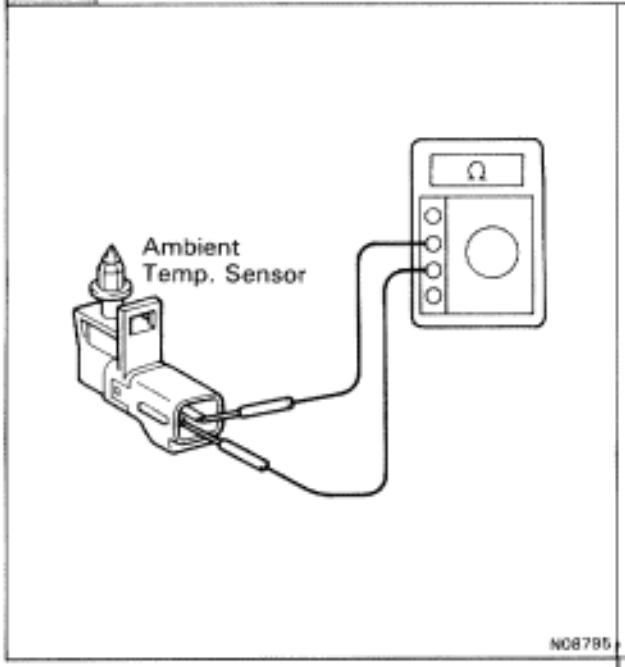

P
1. Remove the clip and the sensor from the right side inside the bumper reinforcement.
2. Disconnect ambient temperature sensor connector.

C Check resistance between terminals 1 and 2 of ambient temperature sensor connector at each temperature.

OK **Resistance:**
at 25˚C (77˚F): 1.6 ~ 1.8 k
at 50˚C (122˚F): 0.5 ~ 0.7 k

HINT: As the temperature increases, the resistance decreases gradually.

NOTICE:
When installing the ambient temperature sensor, be sure to connect the sensor connector before connecting the battery.

OK

NG **Replace ambient temperature sensor.**

3 Check harness and connector between A/C amplifier and ambient temperature sensor (See page IN–30).

OK

NG **Repair or replace harness or connector.**

Check and replace A/C amplifier.

Blinking Light FOOT Evaporator Temperature Sensor Circuit

CIRCUIT DESCRIPTION

This sensor detects the temperature inside the cooling unit and sends the appropriate signals to the A/C amplifier.

Diagnostic Sensor Check Detecting Condition	Trouble Area
Open or short in evaporator temperature sensor circuit.	• Evaporator temperature sensor • Harness or connector between evaporator temperature sensor and A/C amplifier • A/C amplifier

WIRING DIAGRAM

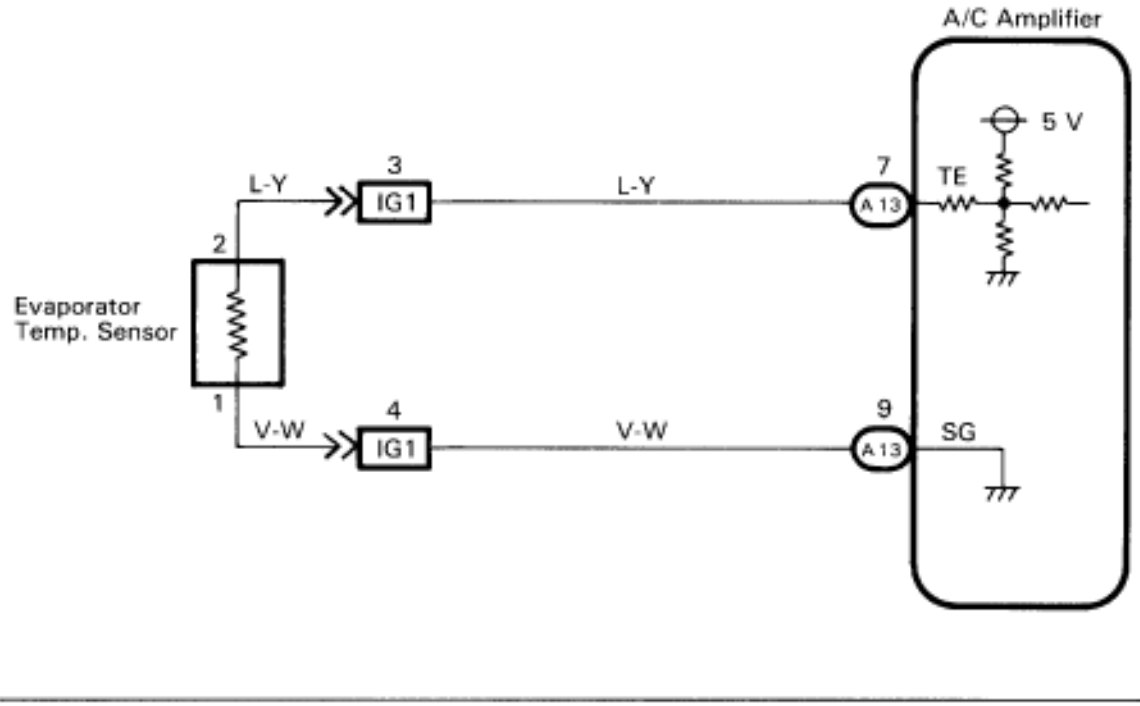

INSPECTION PROCEDURE

1 Check voltage between terminals TE and SG of A/C amplifier connector.

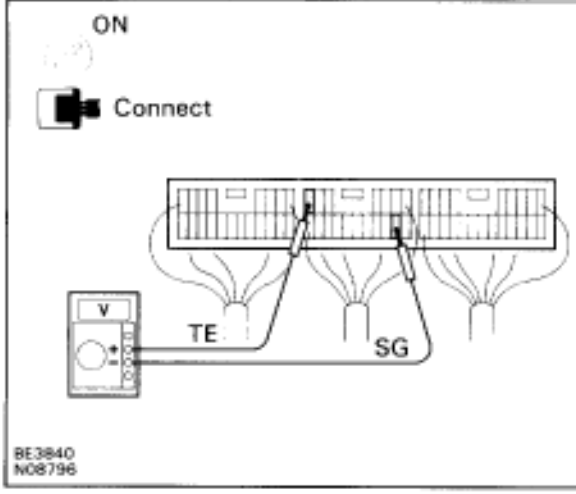

P Remove A/C amplifier with connectors still connected.

C
1. Turn ignition switch ON.
2. Measure voltage between terminal TE of SG of A/C amplifier connector at each temperature.

OK **Voltage:**
at 0˚C (32˚F): 2.0 ~ 2.4 V
at 15˚C (59˚F): 1.4 ~ 1.8 V

HINT: As the temperature increases, the voltage decreases gradually.

NG

OK → **Proceed to next circuit inspection shown on matrix chart (See page AC–26). However, if the light is still blinking, check and replace A/C amplifier.**

2 Check evaporator temperature sensor.

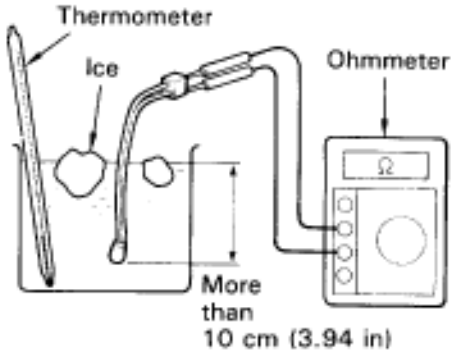

P Remove evaporator temperature sensor (See page AC–106)

C Check resistance between terminals 1 and 2 of evaporator temperature sensor connector at each temperature.

OK **Resistance:**
at 0˚C (32˚F): 4.5 ~ 5.2 k
at 15˚C (59˚F): 2.0 ~ 2.7 k

HINT: As the temperature increases, the resistance decreases gradually.

OK

NG → **Replace evaporator temperature sensor.**

3 Check harness and connector between A/C amplifier and evaporator temperature sensor (See page IN–30).

OK

NG → **Repair or replace harness or connector.**

Check and replace A/C amplifier.

Blinking Light F D Engine Coolant Temperature Sensor Circuit

CIRCUIT DESCRIPTION

This sensor detects the coolant temperature and sends the appropriate signals to the A/C amplifier. These signals are used for warm up control when the engine is cold.

Diagnostic Sensor Check Detecting Condition	Trouble Area
Open or short in engine coolant temperature sensor circuit.	• Engine coolant temperature sensor • Harness or connector between engine coolant temperature sensor and A/C amplifier • A/C amplifier

WIRING DIAGRAM

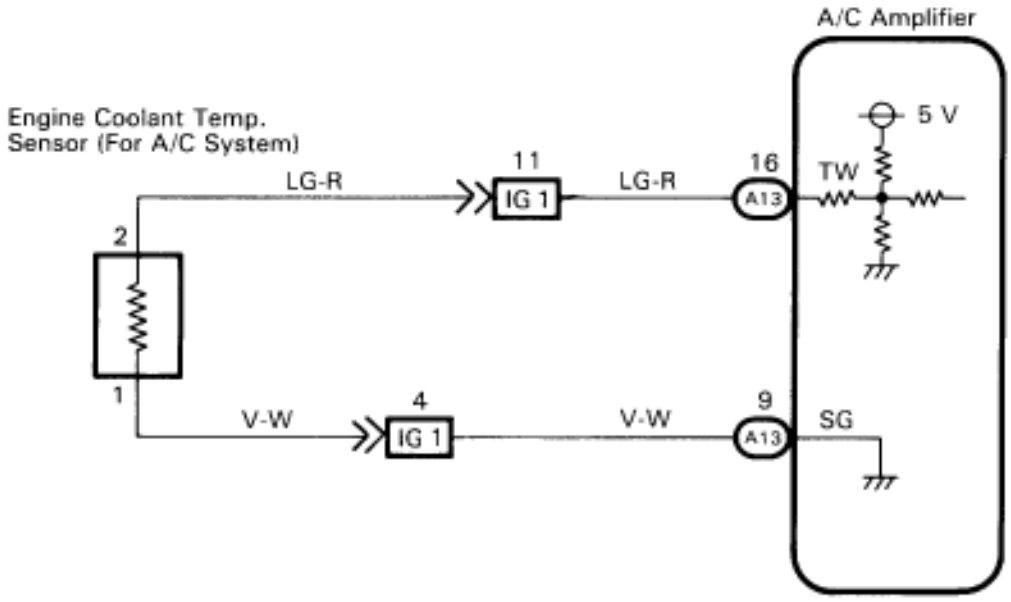

INSPECTION PROCEDURE

1 Check voltage between terminals TW and SG of A/C amplifier connector.

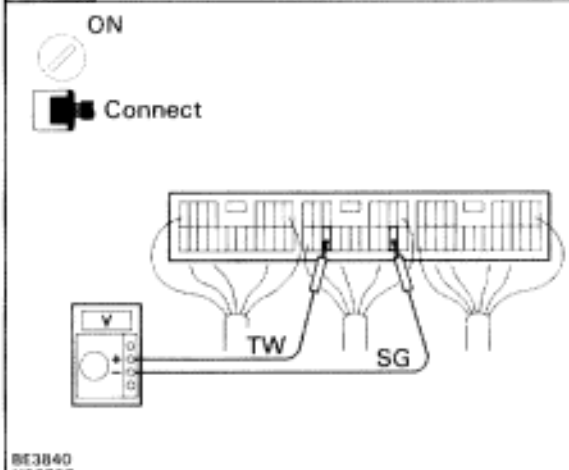

P Remove A/C amplifier with connectors still connected.

C
1. Turn ignition switch ON.
2. Measure voltage between terminal TW of SG of A/C amplifier connector at each temperature.

OK **Voltage:**

at 0°C (32°F):	**2.8 ~ 3.2 V**
at 40°C (104°F):	**1.8 ~ 2.2 V**
at 70°C (158°F):	**1.3 ~ 1.5 V**

HINT: As the temperature increases, the voltage decreases gradually.

NG

OK **Proceed to next circuit inspection shown on matrix chart (See page AC–26). However, if the light is still blinking, check and replace A/C amplifier.**

2 Check engine coolant temperature sensor.

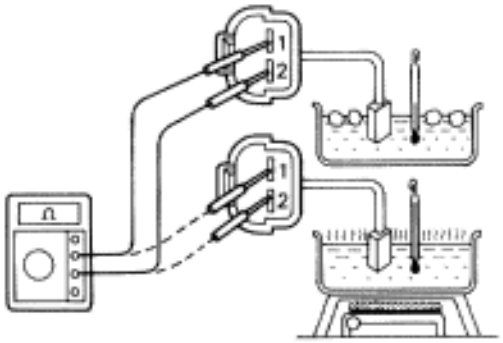

P
1. Remove A/C unit (See page AC–80).
2. Remove engine coolant temperature sensor.

C Measure resistance between terminals 1 and 2 of engine coolant temperature sensor connector at each temperature.

OK **Resistance:**

at 0°C (32°F):	**Below 50 k**
at 40°C (104°F):	**2.4 ~ 2.8 k**
at 100°C (212°F):	**Over 0.2 k**

HINT: As the temperature increases, the resistance decreases gradually.

OK

NG **Replace engine coolant temperature sensor.**

3 Check harness and connector between A/C amplifier and engine coolant temperature sensor (See page IN–30).

OK

NG **Repair or replace harness or connector.**

Check and replace A/C amplifier.

Blinking Light DEF Solar Sensor Circuit

CIRCUIT DESCRIPTION

A photo diode in the solar sensor detects solar radi–ation and sends signals to the A/C amplifier.

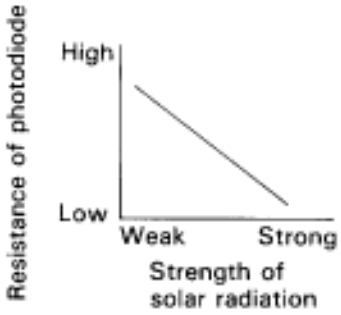

Diagnostic Sensor Check Detecting Condition	Trouble Area
Open or short in solar sensor circuit. (Please not that blinking of the LED for DEF is not abnormal when the sensor is not receiving solar radiation.)	• Solar sensor • Harness or connector between solar sensor and A/C amplifier • A/C amplifier

WIRING DIAGRAM

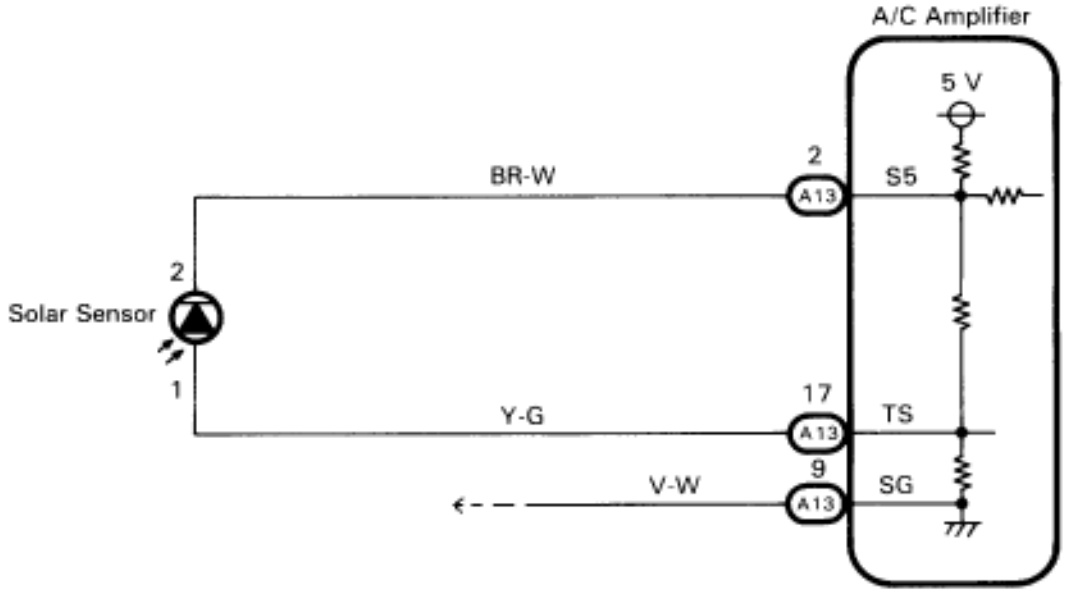

INSPECTION PROCEDURE

1 Check voltage between terminals S5 and TS of A/C amplifier connector.

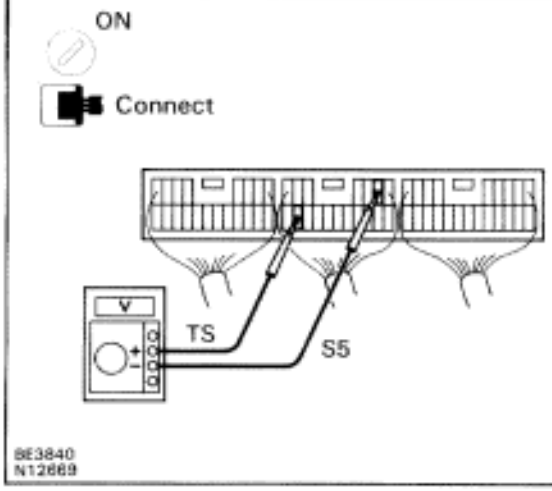

P Remove A/C amplifier with connectors still connected.

C
1. Turn ignition switch ON.
2. Measure voltage between terminal S5 of TS of A/C amplifier connector when the solar sensor is subjected to an electric light, and when the sen–sor is covered by a cloth.

OK

Condition	Voltage
Sensor covered by a cloth	0.8 ~ 4.3 V
Sensor subjected to electric light	Below 0.8 V

HINT: As the inspection light is gradually moved away from the sensor, the voltage increases.

NG

OK → **Proceed to next circuit inspection shown on matrix chart (See page AC–26). However, if the light is still blinking, check and replace A/C amplifier.**

2 Check solar sensor.

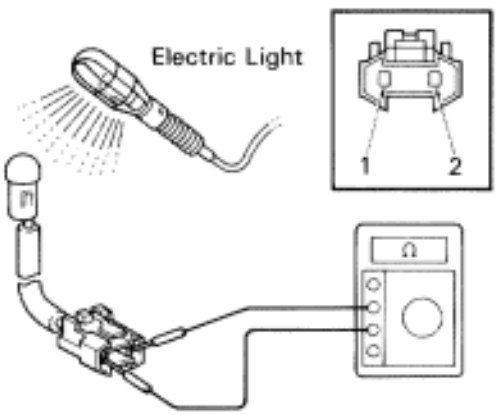

P
1. Remove glove compartment assembly.
2. Remove solar sensor.

C
1. Cover the sensor by a cloth.
2. Measure resistance between terminals 1 and 2 of solar sensor connector.

Hint Connect positive (+) lead of ohmmeter to terminal 2 and negative (–) lead to terminal 1 of the solar sen–sor.

OK **Resistance: ∞ ((no continuity)**

P
1. Remove the cloth from the solar sensor and sub–ject the sensor to electric light.
2. Measure resistance.

OK **Resistance: Approx. 4k((continuity)**

HINT: As the electric light is moved gradually away from the sensor, the resistance increases.

OK

NG → **Replace solar sensor.**

3 Check harness and connector between A/C amplifier and solar sensor (See page IN–30).

OK

NG → **Repair or replace harness or connector.**

Check and replace A/C amplifier.

Blinking Light A C Compressor Lock Sensor Circuit

CIRCUIT DESCRIPTION

This sensor sends 1 pulse per engine revolution to the A/C amplifier. If the number ratio of the compressor speed divided by the engine speed is smaller than a predetermined value, the A/C amplifier turns the compressor off. And, the indicator flashes at about 1 second intervals.

Diagnostic Sensor Check Detecting Condition	Trouble Area
All conditions below are detected for 3 secs. or more (a) Engine speed: 450 rpm or more (b) Ratio between engine and compressor speed deviates 20% or more in comparison to normal operation.	• Compressor • Compressor drive belt • Compressor lock sensor • Harness and connector between compressor and A/C amplifier • A/C amplifier

WIRING DIAGRAM

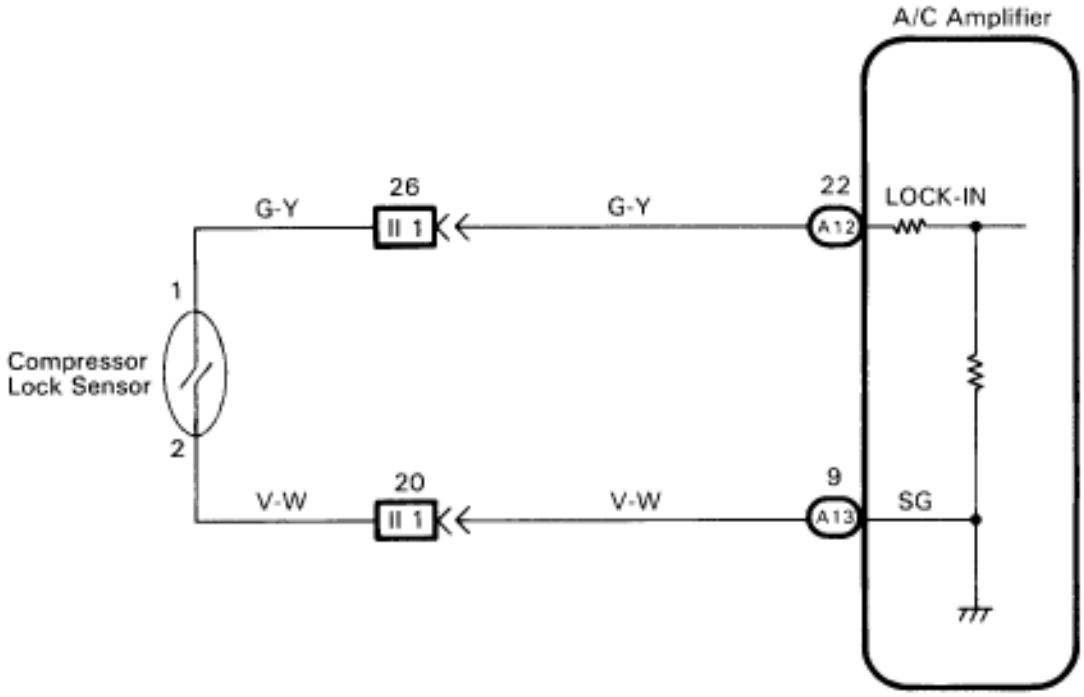

INSPECTION PROCEDURE

1 Check compressor.

P (1) Check compressor drive belt tension.
(2) Check the compressor does not lock during operation with engine started and blower switch
and A/C switch ON.

OK

NG → **Adjust drive belt tension or repair compressor.**

2 Check compressor lock sensor.



NC9020

P Disconnect compressor lock sensor connector

C Measure resistance between terminals 1 and 2 of compressor lock sensor connector.

OK **Resistance: at 20°C (68°F): 160 ~ 210**

OK

NG → **Replace compressor lock sensor.**

3 Check for open and short harness and connector between A/C amplifier and room temperature sensor (See page IN–30).

OK

NG → **Repair or replace harness or connector.**

Proceed to next circuit inspection shown on matrix chart (See page AC–26). However, if the light is still blinking, check and replace A/C amplifier.

Blinking Light FRS Pressure Switch Circuit

CIRCUIT DESCRIPTION

The pressure switch sends the appropriate signals to the A/C amplifier when the air conditioning refrigerant pressure drops too low or rises too high. When the A/C amplifier receives these signals, it outputs signals via the ECM to switch OFF the compressor relay and turns the magnetic clutch OFF.

Diagnostic Sensor Check Detecting Condition	Trouble Area
Open in pressure sensor circuit Abnormal refrigerant pressure { below 196 kPa (2.0 kgf/cm^2, 28 psi) { over 3,140 kPa (32.0 kgf/cm^2, 455 psi)	• Pressure switch • Harness or connector between pressure switch and A/C amplifier • Refrigerant pipe line • A/C amplifier

WIRING DIAGRAM

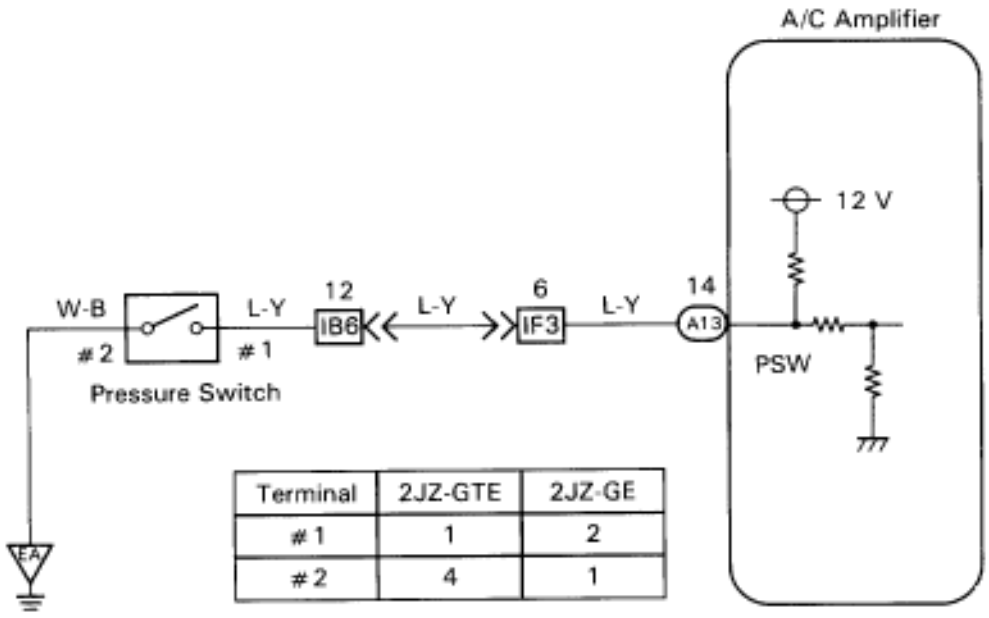

Terminal	2JZ-GTE	2JZ-GE
#1	1	2
#2	4	1

AC2924

INSPECTION PROCEDURE

1 Check voltage between terminal PSW of A/C amplifier and body ground.

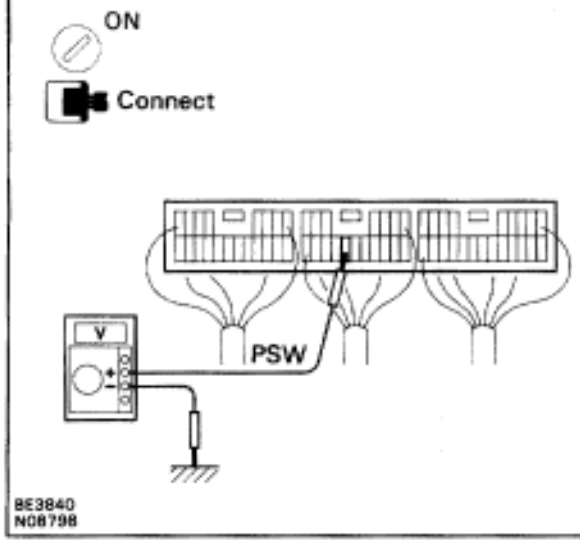

P Install the manifold gauge set.

C
1. Turn ignition switch ON.
2. Check voltage between terminal PSW of A/C amplifier connector and body ground when air conditioning gas pressure is changed.

OK **The voltage changes with gas pressure, as shown in the diagram below.**

Low Pressure Cut Side	Reference: High Pressure Cut Side
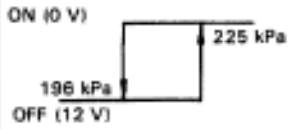	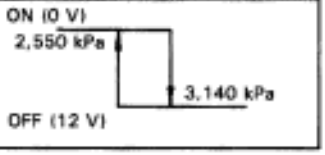

NG

OK → **Proceed to next circuit inspection shown on matrix chart (See page AC–26).**

2 Check pressure switch.

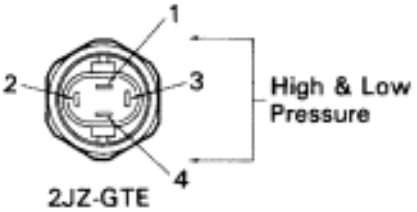



N08806

P Disconnect pressure switch connector.

C
1. Turn ignition switch ON.
2. Check continuity between terminals 1 and 4 (2 and 1) of pressure switch when air conditioning gas pressure is changed.

OK **The continuity changes with gas pressure as shown below**

Low Pressure Cut Side	Reference: High Pressure Cut Side
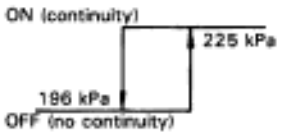	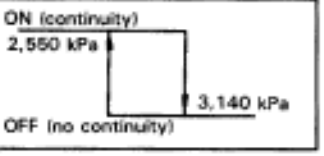

OK

NG → **Repair or replace harness or connector.**

3 Check harness and connector between A/C amplifier and room temperature sensor (See page IN–30).

OK

NG → **Repair or replace harness or connector.**

Check and replace A/C amplifier.

Blinking Light REC M2 Air Mix Damper Position Sensor Circuit

CIRCUIT DESCRIPTION

This sensor detects the position of the air mix damper and sends the appropriate signals to the A/C amplifier.
The position sensor is built into the air mix damper control servo motor assembly.

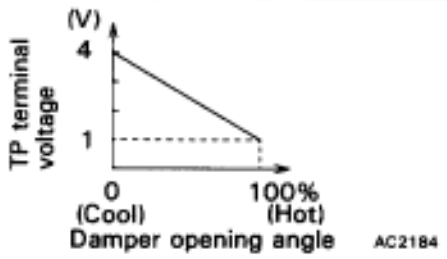

Light	Diagnostic Sensor Check Detecting Condition	Trouble Area
REC	Short to ground or power source circuit in air mix damper position sensor circuit.	• Air mix damper position sensor • Harness or connector between air mix damper control servo motor assembly and A/C amplifier • A/C amplifier
M2	Air mix damper position sensor value does not change even if A/C amplifier signals the air mix damper control servo motor to operate.	

WIRING DIAGRAM

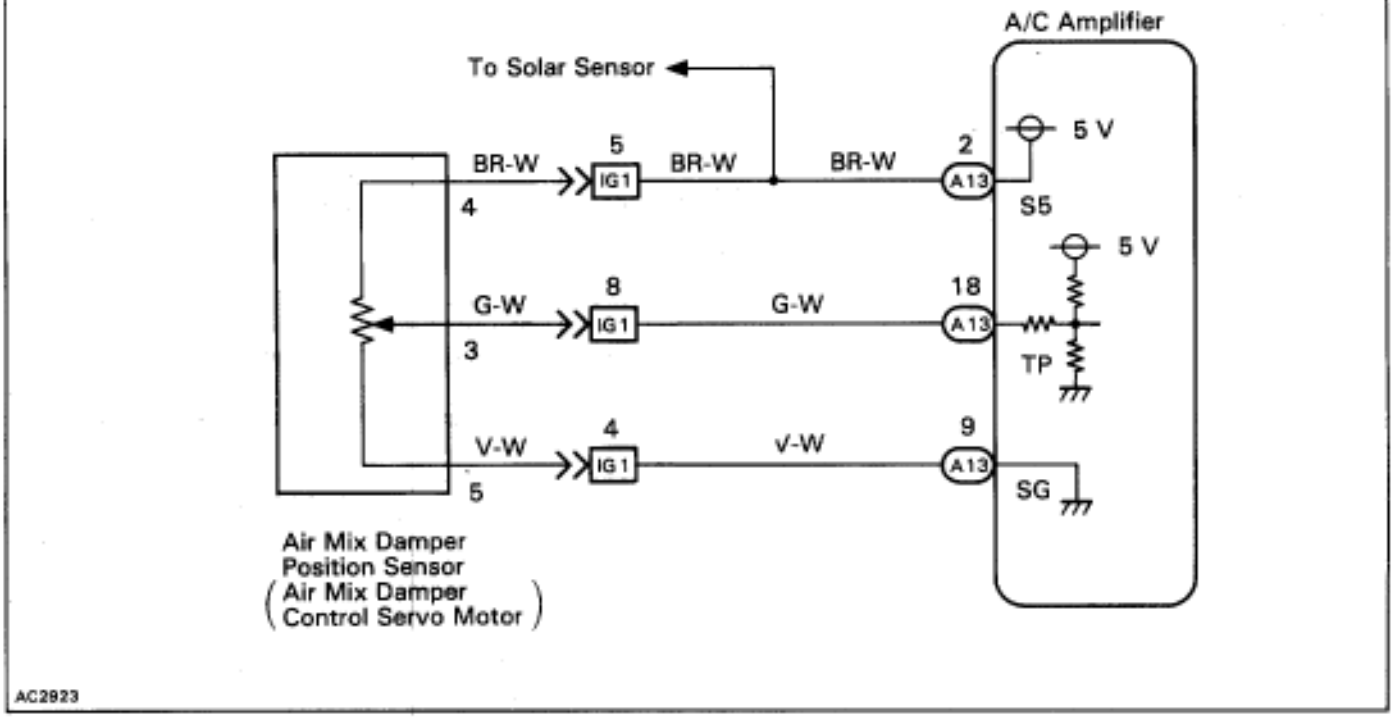

INSPECTION PROCEDURE

1 Check voltage between terminals TP and SG of A/C amplifier connector.

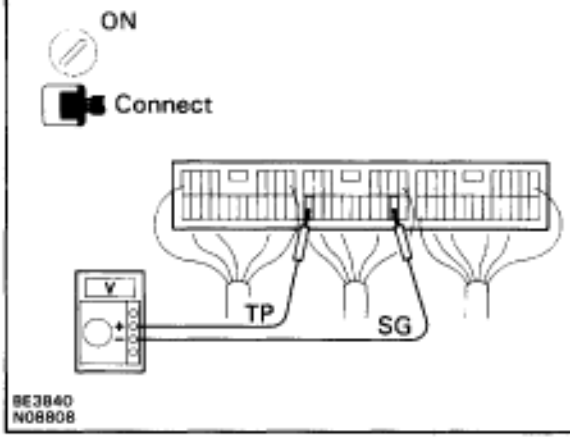

P Remove A/C amplifier with connectors still connected.

C
1. Turn ignition switch ON.
2. Change the set temperature to activate the air mix damper control servo motor, and measure the voltage between terminals TP and SG of A/C amplifier connector each time when the set temperature is changed.

OK

Set Temperature	Voltage
Max. cool	3.5 – 4.5 V
Max. hot	0.5 – 1.5 V

HINT: As the set temperature increases, the voltage decreases.

NG

OK → **Proceed to next circuit inspection shown on matrix chart (See page AC–26). However, if the light is still blinking, check and replace A/C amplifier.**

2 Check air mix damper position sensor.

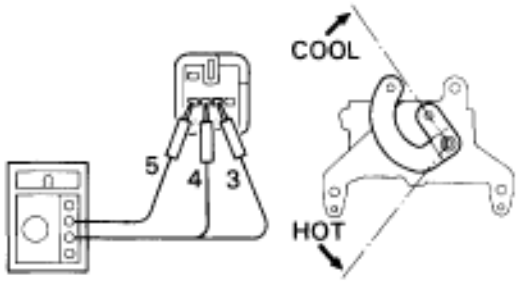

P
1. Remove instrument panel.
2. Disconnect air mix damper control servo motor assembly connector.

C Measure resistance between terminals 4 and 5 of air mix damper control servo motor assembly connector.

OK **Resistance: 4.8 ~ 7.2 k**

C While operating air mix damper control servo motor, following the procedure on page AC–44, measure resistance between terminals 5 and 3 of air mix damper control servo motor assembly connector.

OK

Position	Resistance
Max. cool	3.84 ~ 5.76 kΩ
Max. hot	0.96 ~ 1.44 kΩ

HINT: As the air mix damper control servo motor moves from cool side to hot side, the resistance decreases.

OK

NG → **Replace air mix damper control servo motor assembly.**

3 Check harness and connector between A/C amplifier and air mix damper control servo motor assembly (See page IN–30).

OK

NG → **Repair or replace harness or connector.**

Check and replace A/C amplifier.

Blinking Light M2 Air Mix Damper Control Servo Motor Circuit

CIRCUIT DESCRIPTION

The air mix damper control servo motor is controlled by the A/C amplifier and signals the air mix damper to move to the desired position.

Diagnostic Sensor Check Detecting Condition	Trouble Area
Air mix damper position sensor value does not change even if A/C amplifier signals the air mix damper control servo motor to operate.	• Air mix damper control servo motor • Air mix damper position sensor • Harness or connector between A/C amplifier and A/M damper control servo motor, A/M damper position sensor • A/C amplifier

WIRING DIAGRAM

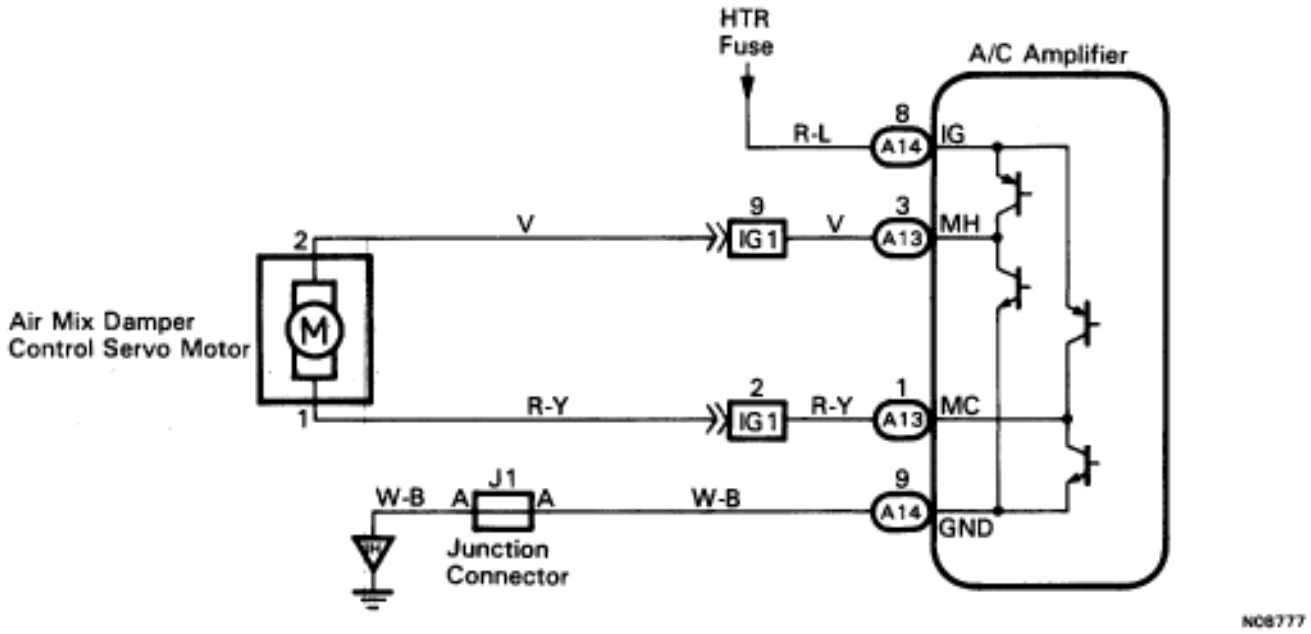

INSPECTION PROCEDURE

1 Actuator check.

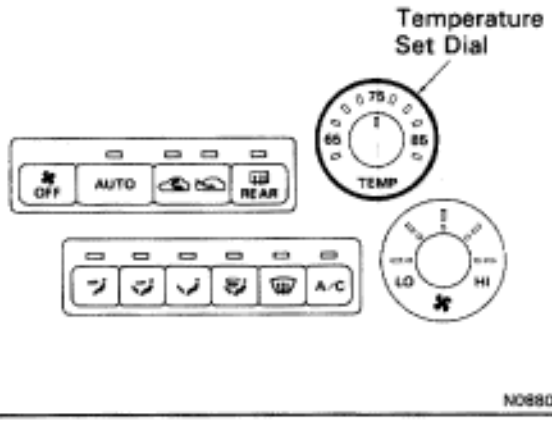

P
1. Warm up the engine.
2. Set to the actuator check mode (See page AC–22)
3. Turn the TSET dial and change it to step operation.

operation.

C Turn the TSET dial and check the operation of the air mix damper and the condition of the blower.

OK

Set Temp.	Air Mix Damper	Condition
Below 20	0% (Fully closed)	Cool air comes out
20 ~ 23	50%	
Over 23	100% (Fully opened)	Warm air comes out

NG

OK → **Proceed to next circuit inspection shown on matrix chart (See page AC–26).**

2 Check air mix damper control servo motor.

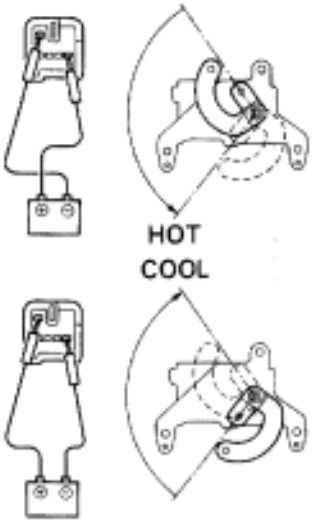

P Remove air mix damper control servo motor assembly

C Connect positive (+) lead to terminal 2 and negative (–) lead to terminal 1.

OK The lever turns smoothly to Hot side.

C Connect negative (–) lead to terminal 2 and positive (+) lead to terminal 1.

OK The lever turns smoothly to Cool side.

OK

NG → **Replace air mix damper control servo motor assembly.**

3 Check harness and connector between A/C amplifier and air mix damper control servo motor assembly (See page IN–30).

OK

NG → **Repair or replace harness or connector.**

Check and replace A/C amplifier.

Air Inlet Damper Control Servo Motor Circuit

CIRCUIT DESCRIPTION

The air inlet damper control servo motor is controlled by the A/C amplifier and signals the air inlet damper to move to the desired position.

Condition	Trouble Area
Air mix damper position sensor value does not change even if A/C amplifier signals the air mix damper control servo motor to operate.	• Air inlet damper position sensor • Harness or connector between air inlet damper control servo motor assembly and A/C amplifier • A/C amplifier

WIRING DIAGRAM

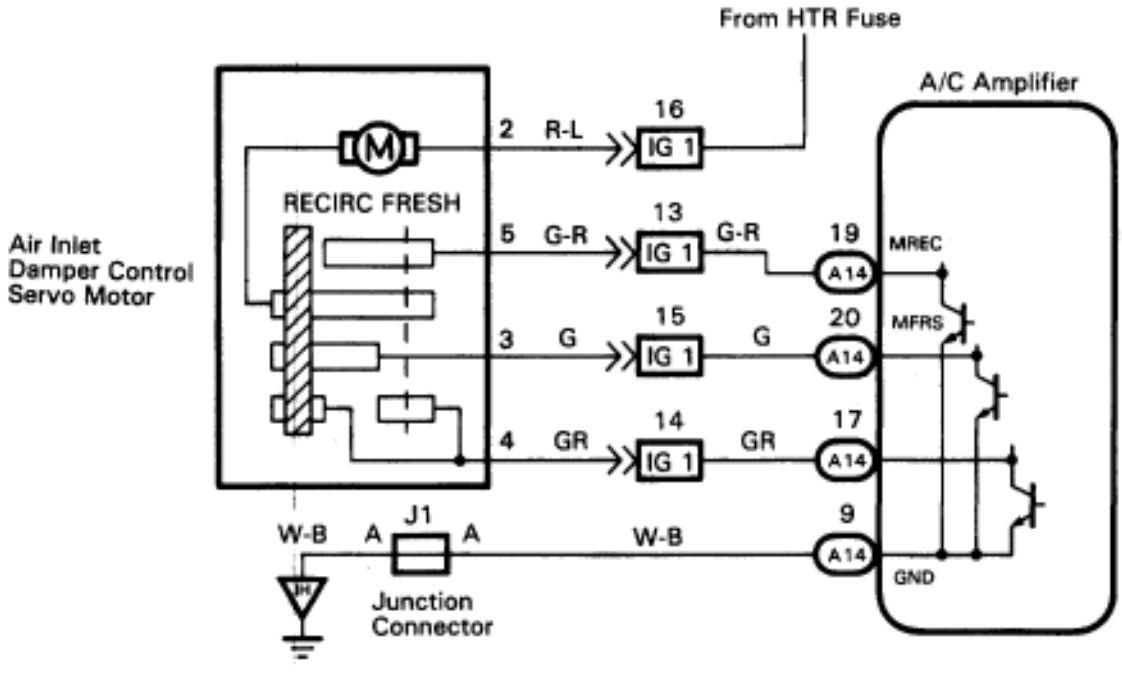

INSPECTION PROCEDURE

1 Actuator check.

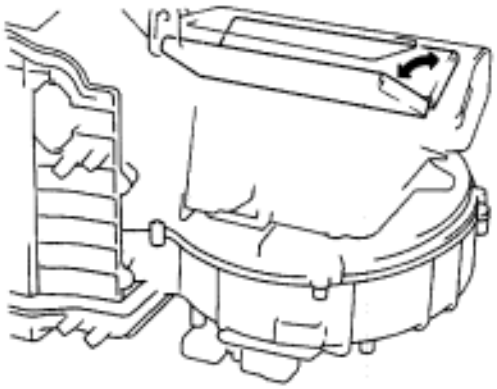

P
1. Remove glove box to see and check the air inlet damper operation.
2. Set to the actuator mode (See page AC–22)
3. Turn the TSET dial and change it to the step operation

C Turn the TSET dial and check the operation of the air inlet damper.

OK

Set Temp.	Air Inlet Damper
Below 20	REC
20 ~ 23	F/R
Over 23	FRS

NG

OK → **Proceed to next circuit inspection shown on matrix chart (See page AC–26).**

2 Check air inlet damper control servo motor.

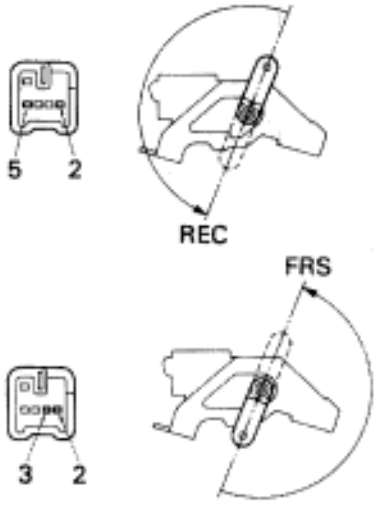

P
1. Remove instrument panel.
2. Remove the air inlet damper control servo motor assembly

C Connect positive (+) lead to terminal 2 and negative (–) lead to terminal 5.

OK The lever moves smoothly to REC position.

C Connect positive (+) lead to terminal 2 and negative (–) lead to terminal 3.

OK The lever moves smoothly to FRS position.

OK

NG → **Replace air inlet damper control servo motor assembly.**

3 Check harness and connector between A/C amplifier and air inlet damper control servo motor assembly (See page IN–30).

OK

NG → **Repair or replace harness or connector.**

Check and replace A/C amplifier.

Blinking Light LO HI Air Outlet Damper Position Sensor Circuit

CIRCUIT DESCRIPTION

This sensor detects the position of the air mix damper and sends the appropriate signals to the A/C amplifier.
The position sensor is built into the air outlet damper control servo motor assembly.

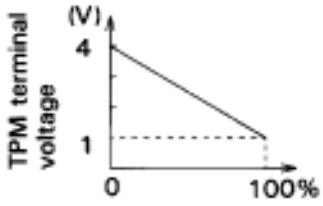

Light	Diagnostic Sensor Check Detecting Condition	Trouble Area
LO	Short to ground or power source circuit in air outlet damper position sensor circuit.	• Air outlet damper position sensor • Harness or connector between air outlet damper control servo motor assembly and A/C amplifier • A/C amplifier
HI	Air outlet damper position sensor value does not change even if A/C amplifier signals the air outlet damper control servo motor to move.	

WIRING DIAGRAM

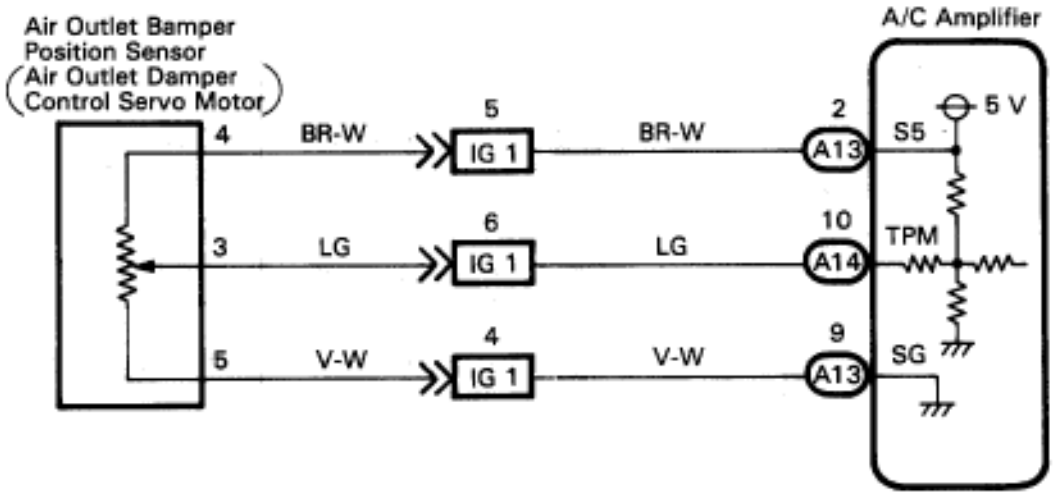

INSPECTION PROCEDURE

1 Check voltage between terminals TPM and SG of A/C amplifier connector.

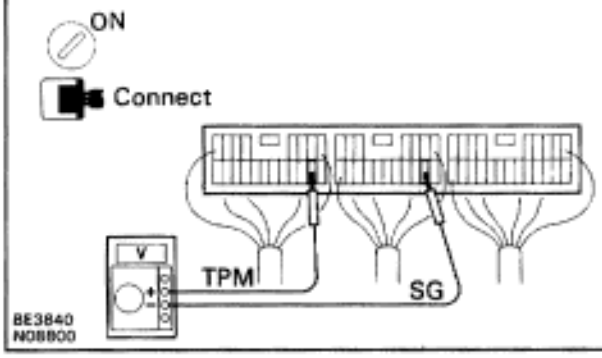

P
1. Remove A/C amplifier with connectors still connected.
2. Turn ignition switch ON

OK

Mode Switch	Voltage
FACE	3.5 ~ 4.5 V
DEF	0.5 ~ 1.5 V

HINT: As the air outlet damper control servo motor is moved from VENT side to DEF side, the voltage decreases gradually without interruption.

NG

OK → **Proceed to next circuit inspection shown on matrix chart (See page AC–26). However, if the light is still blinking, check and replace A/C amplifier.**

2 Check air outlet damper position sensor.

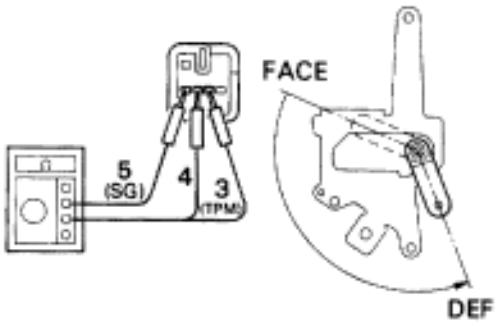

P
1. Remove instrument panel.
2. Disconnect air outlet damper control servo motor assembly connector.

C Measure resistance between terminals 4 and 5 of air outlet damper control servo motor assembly connector.

OK **Resistance: 4.7 ~ 7.2 k**

C While operating air outlet damper control servo motor, as in the procedure on page AC–50, measure resistance between terminals TPM and SG of air outlet servo motor assembly connector.

OK **Resistance**

Damper Position	Resistance
FACE	3.84 ~ 5.76 kΩ
DEF	0.96 ~ 1.44 kΩ

HINT: As the air outlet servo motor moves from FACE side to DEF side, the resistance decreases gradually without interruption.

OK

NG → **Replace max. cool damper control servo motor assembly.**

3 Check harness and connector between A/C amplifier and max. cool damper control servo motor assembly (See page IN–30).

OK

NG → **Repair or replace harness or connector.**

Check and replace A/C amplifier.

Blinking Light HI Air Outlet Damper Control Servo Motor Circuit

CIRCUIT DESCRIPTION

This circuit turns the servo motor and changes each mode damper position by the signals from the A/C amplifier. When the AUTO switch is on, the A/C amplifier changes the mode automatically between (FACE) (BI–LEVEL) and (FOOT) according to the temperature setting.

Diagnostic Sensor Check Detecting Condition	Trouble Area
Air outlet damper position sensor value does not change even if A/C amplifier signals the air outlet damper control servo motor.	• Air outlet damper control servo motor • Air outlet damper position sensor • Harness or connector between A/C amplifier and air outlet damper control servo motor, air outlet damper position sensor • A/C amplifier

WIRING DIAGRAM

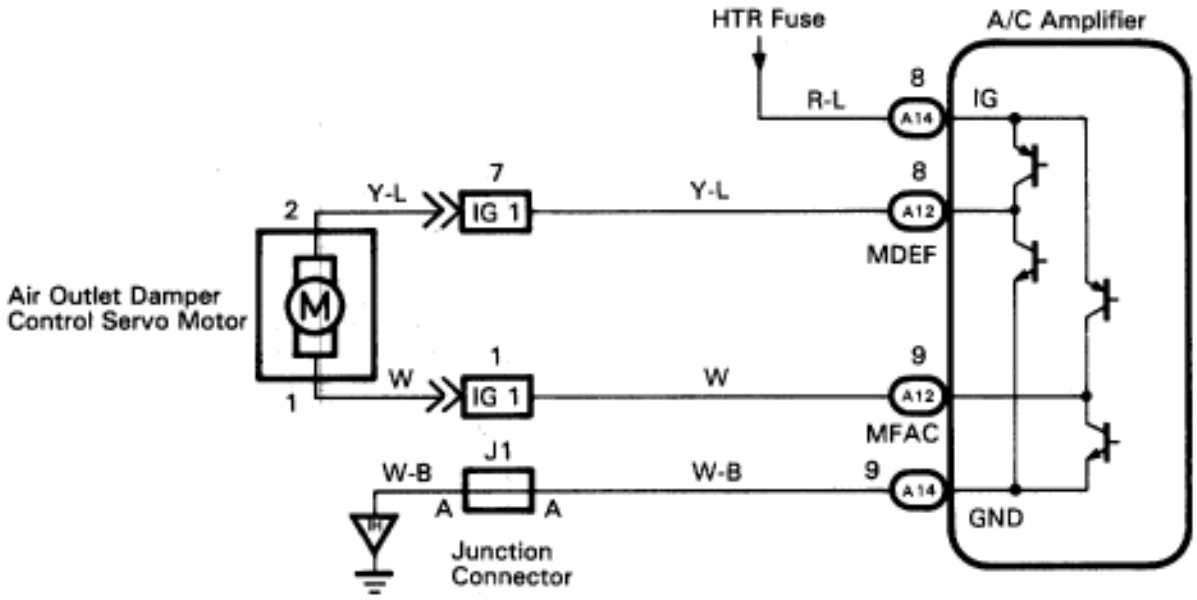

N08818

INSPECTION PROCEDURE

1 Actuator check.

	Air Flow
Below 20	FACE
20 ~ 23	BI-LEVEL
23 ~ 27	FOOT
27 ~ 30	FOOT DEF
Over 30	DEF

P
1. Set to the actuator check mode (see page AC–22).
2. Turn the temp. dial and change to step operation .

C Turn the temp. dial and check the condition of air flow.

OK The mode changes with the change in the temperature display as shown in the table.

NG

OK **Proceed to next circuit inspection shown on matrix chart (See page AC–26).**

2 Check air outlet damper control servo motor.

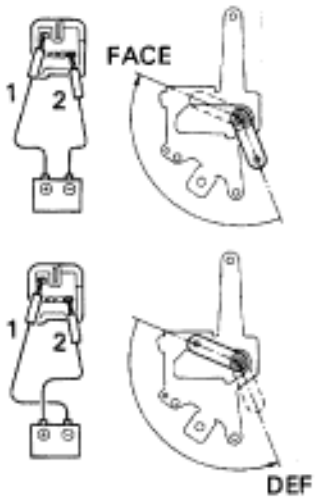

P
1. Remove instrument panel.
2. Remove the air outlet damper control servo motor assembly.

C Connect positive (+) lead to terminal 1 and negative (–) lead to terminal 2.

OK The lever moves smoothly to FACE position.

C Connect negative (–) lead to terminal 1 and positive (1) lead to terminal 2.

OK The lever moves smoothly to DEF position.

OK

NG **Replace air outlet servo motor.**

3 Check for open and short in harness and connector between A/C amplifier and air outlet damper control servo motor, air outlet damper control servo motor and battery, air outlet damper control servo motor and body ground (See page IN–26).

OK

NG **Repair or replace harness or connector.**

Check and replace A/C amplifier.

Back Up Power Source Circuit

CIRCUIT DESCRIPTION

This is the back up power source for the A/C amplifier. Power is supplied even when the ignition switch is off and is used for diagnostic sensor check memory, etc.

WIRING DIAGRAM

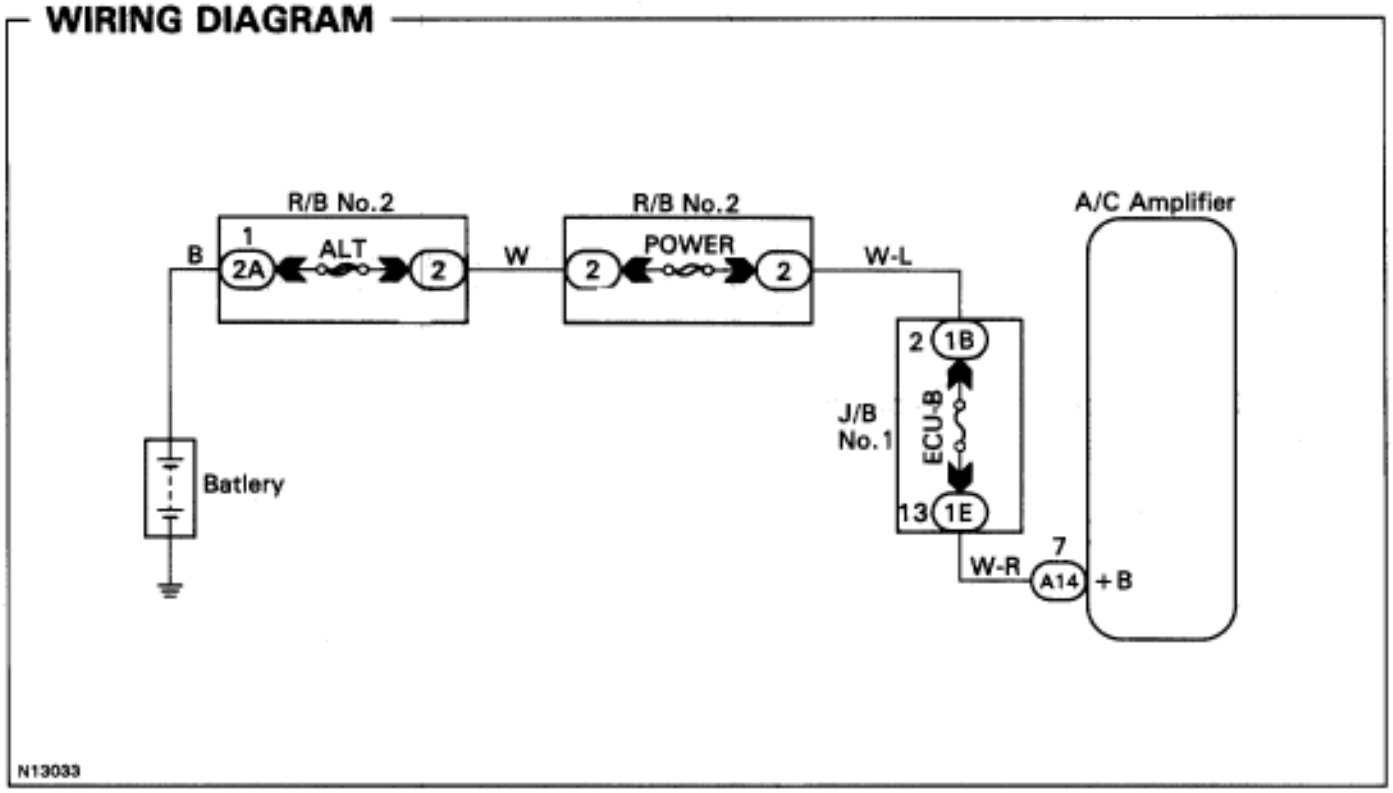

INSPECTION PROCEDURE

1 Check voltage between terminal +B of A/C amplifier connector and body ground.

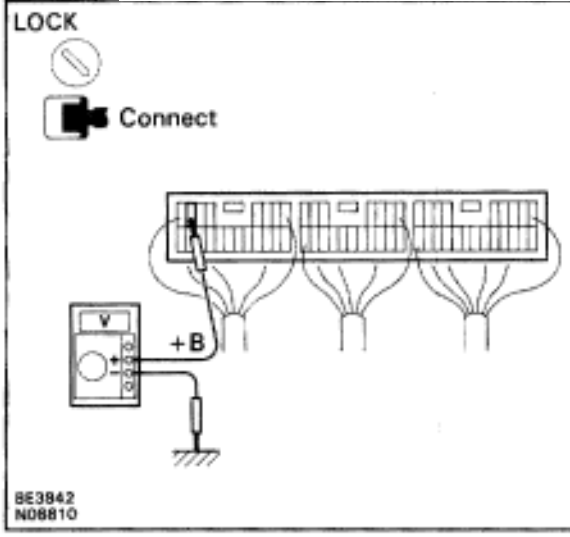

P Remove the A/C amplifier with connector still connected.

C Measure voltage between terminal + B of air conditioner control assembly connector and body ground.

OK **Voltage: Battery positive voltage**

NG

OK → **Proceed to next circuit inspection shown on matrix chart (See page AC–26).**

2 Check ECU–B fuse.

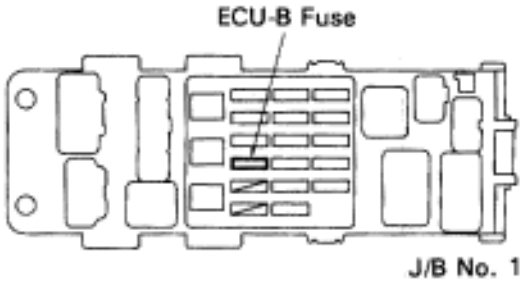

P Remove ECU–B fuse from J/B No. 1.

C Check continuity of ECU–B fuse.

OK **Continuity**

OK

NG → **Check for short in all the harness and components to the ECU–B fuse (See attached wiring diagram).**

Check and repair harness and connector between A/C amplifier and battery.

IG Power Source Circuit

CIRCUIT DESCRIPTION

This is the power source for the A/C amplifier and servo motors, etc.

WIRING DIAGRAM

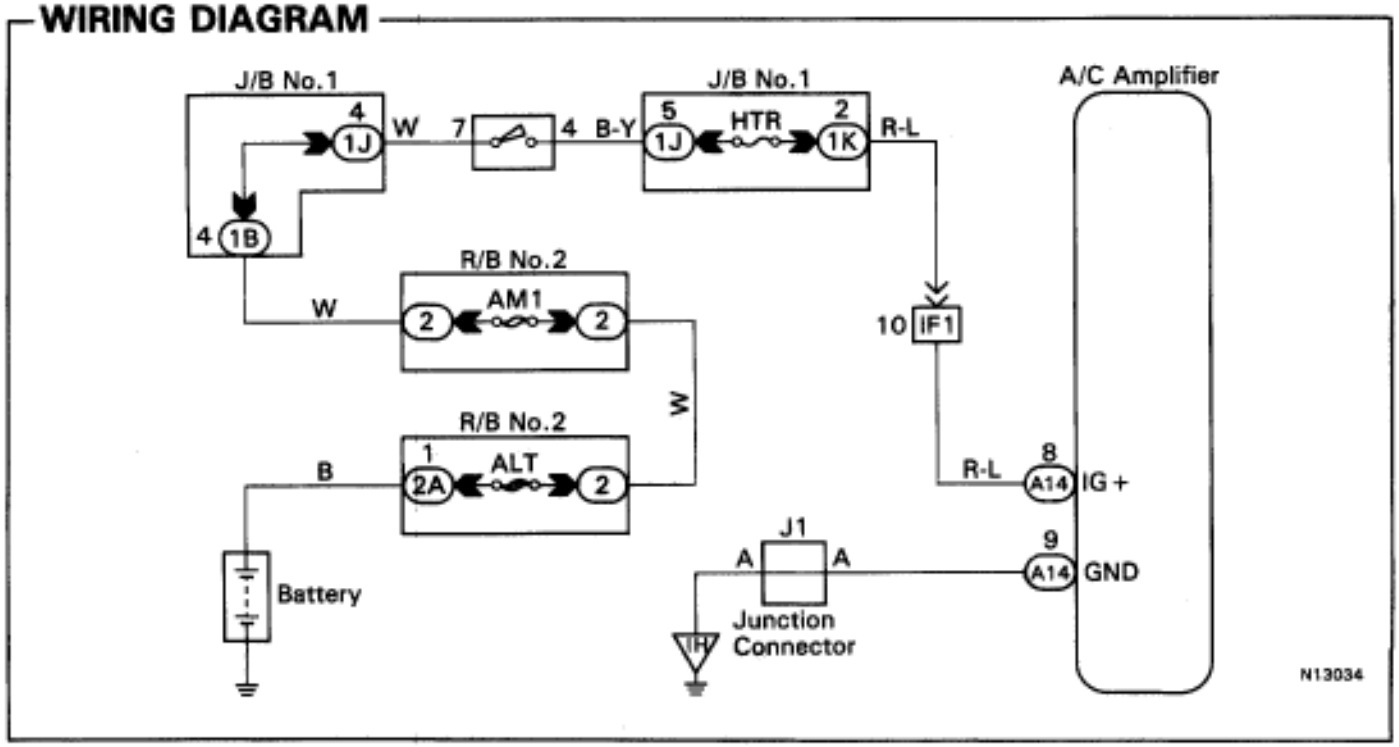

INSPECTION PROCEDURE

Check voltage between terminals IG and GND of A/C amplifier connector.

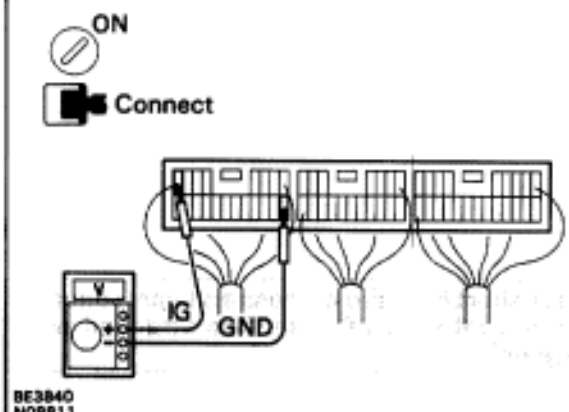

P Remove the A/C amplifier with connector still connected

C
1. Turn ignition switch ON.
2. Measure voltage between terminals IG and GND of A/C amplifier.

OK **Voltage: Battery positive voltage**

NG

OK **Proceed to next circuit inspection shown on matrix chart (See page AC–26).**

Go to step 2.

2 Check continuity between terminal GND of A/C amplifier and body ground.

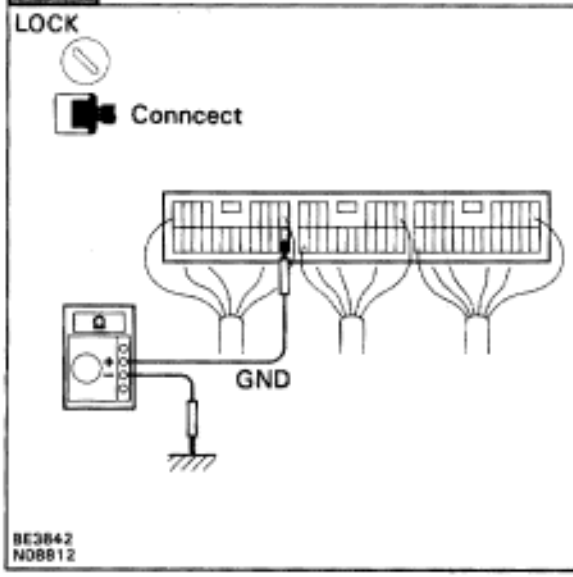

C Measure resistance between terminal GND of A/C amplifier and body ground.

OK **Resistance: O (continuity)**

OK

NG **Repair or replace harness or connector.**

3 Check HTR fuse.

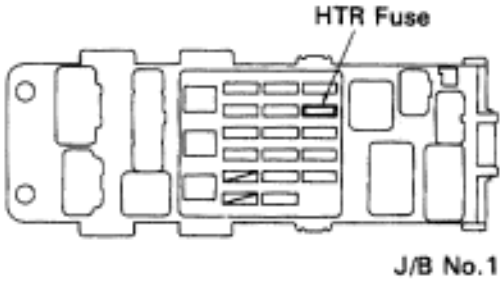

P Remove HTR fuse from J/B No. 1.

C Check continuity of HTR fuse.

OK **Continuity**

OK

NG **Check for short in all the harness and components to the HTR fuse (See attached wiring diagram).**

Check and repair harness and connector between A/C amplifier and battery.

ACC Power Source Circuit

CIRCUIT DESCRIPTION

This circuit supplies power to the A/C amplifier.

WIRING DIAGRAM

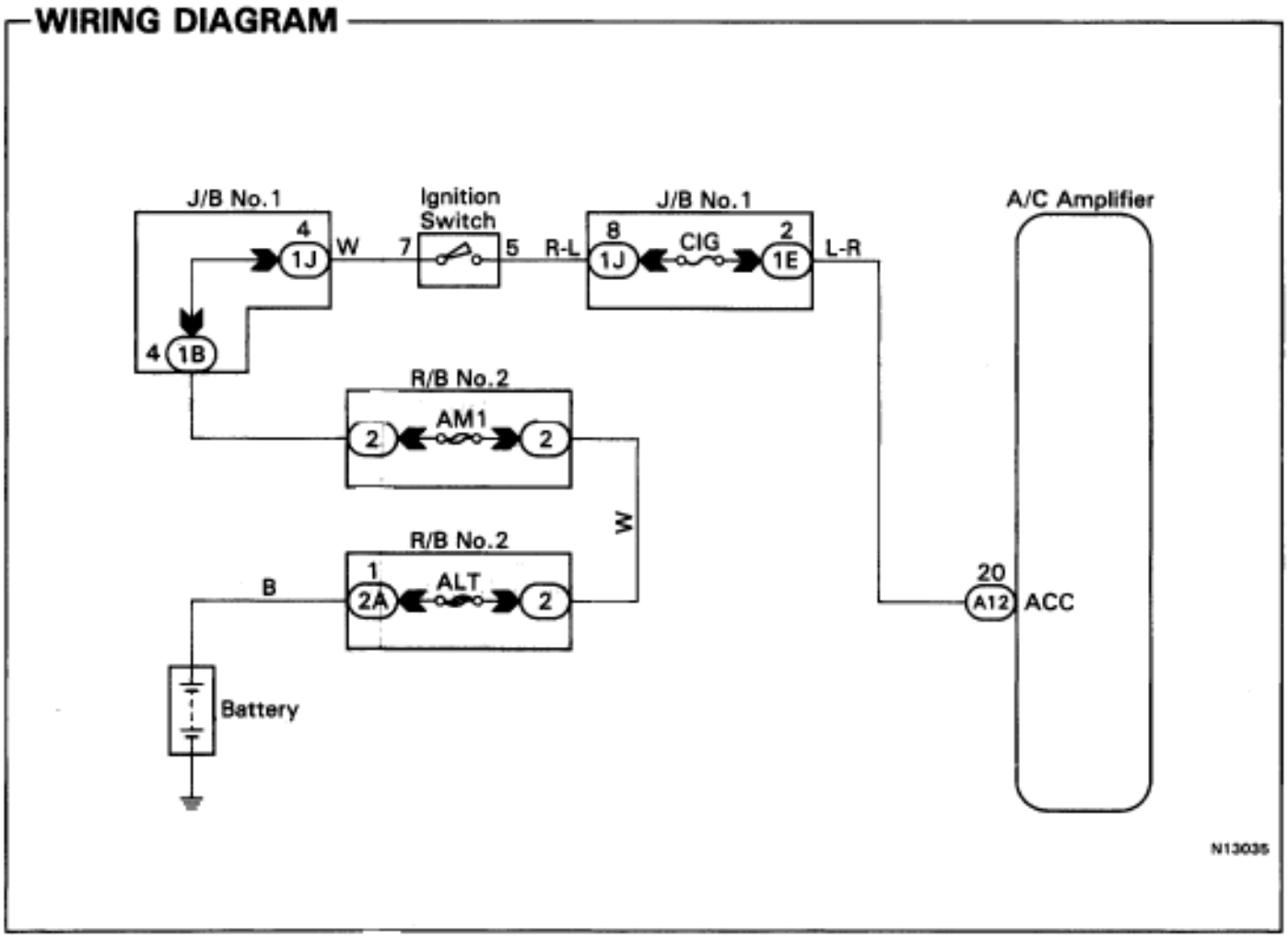

INSPECTION PROCEDURE

1 Check voltage between terminal ACC of A/C amplifier connector and body ground.

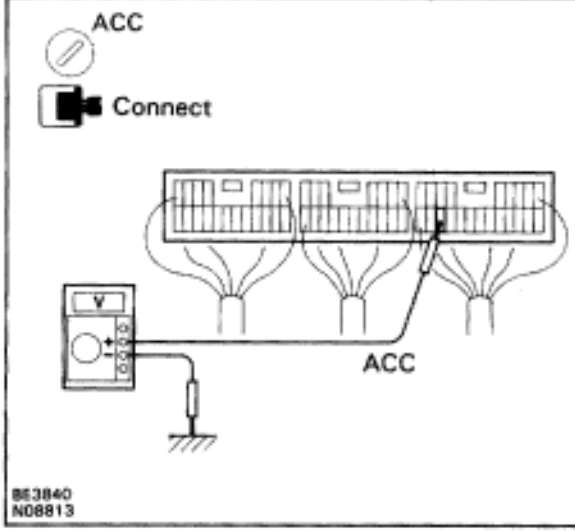

P Remove the A/C amplifier with connector still connected

C
1. Turn ignition switch To ACC.
2. Measure voltage between terminals ACC of A/C amplifier connector and body ground.

OK **Voltage: Battery positive voltage**

NG

OK → **Proceed to next circuit inspection shown on matrix chart (See page AC–26).**

2 Check CIG fuse.

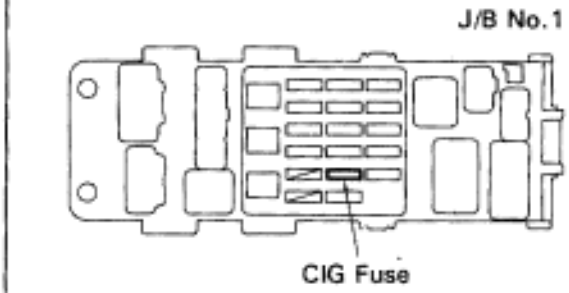

P Remove CIG fuse from J/B No. 1.

C Check continuity of CIG fuse.

OK **Continuity**

OK

NG → **Check for short in all the harness and components to the CIG fuse (See attached wiring diagram).**

Check and repair harness and connector between A/C amplifier and battery.

Heater Relay Circuit

CIRCUIT DESCRIPTION

The heater relay is switched on by signals from the A/C amplifier and switches power to the blower motor.

WIRING DIAGRAM

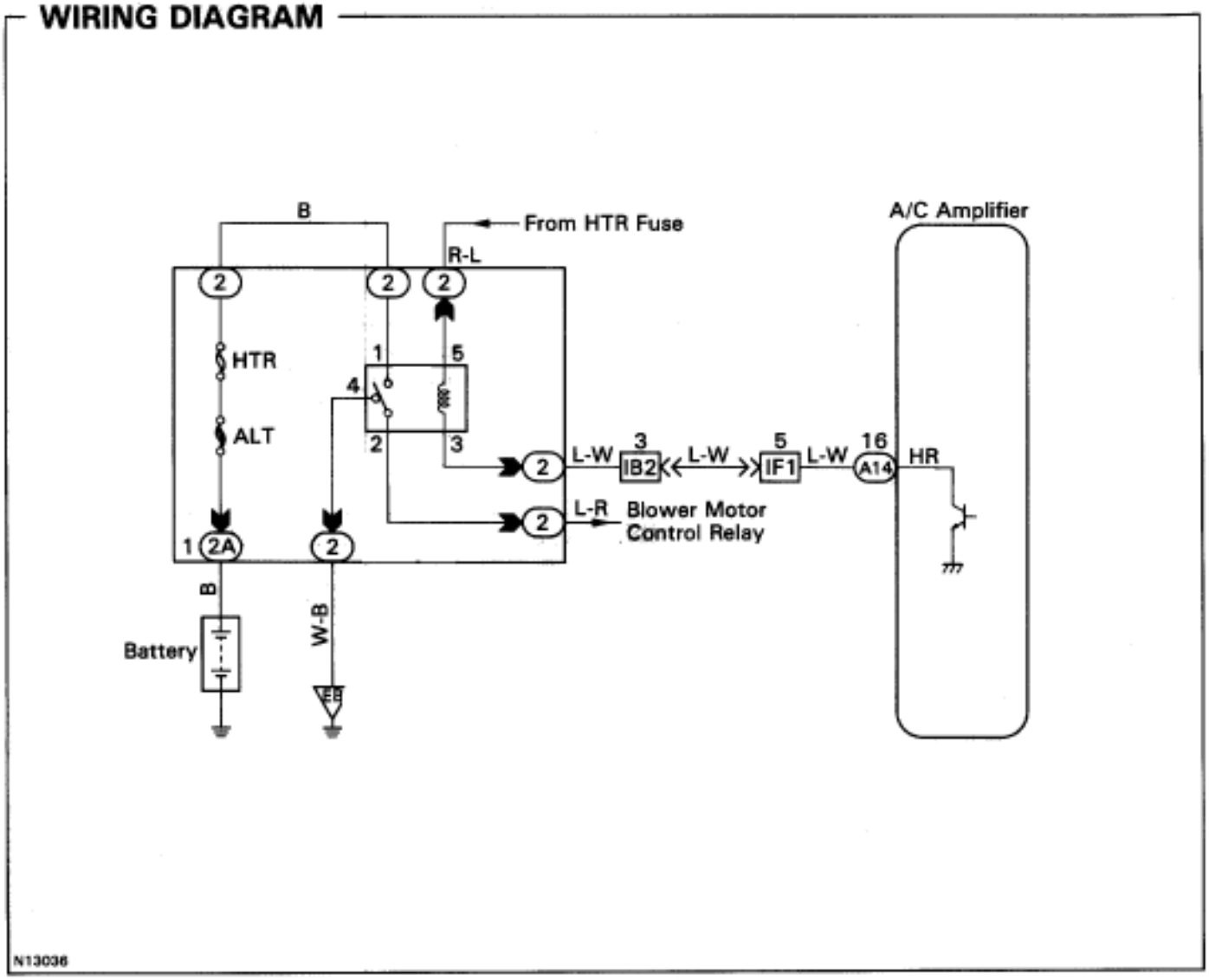

INSPECTION PROCEDURE

1 Check voltage between terminal HR of A/C amplifier connector and body ground.

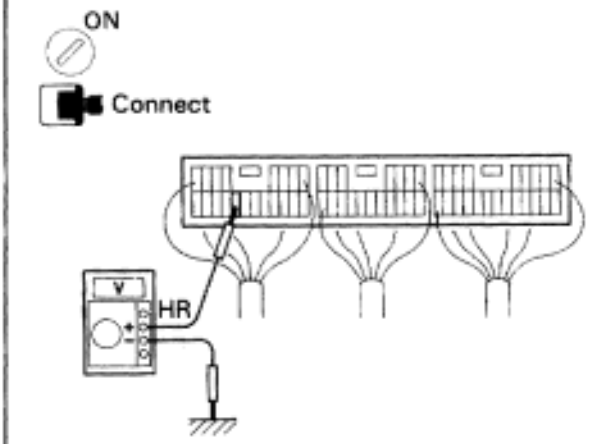

P Remove the A/C amplifier with connectors still connected

C Measure voltage between terminals HR of A/C amplifier connector and body ground when ignition switch is ON and OFF.

OK

Ignition Switch	Voltage	
OFF	OV	
ON	Blower ON	Below 1.O V
	Blower OFF	Battery positive voltage

NG

OK → **Proceed to next circuit inspection shown on matrix chart (See page AC–26).**

2 Check heater relay.

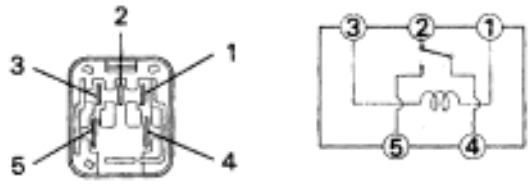

C Check continuity between each pair of terminals of heater relay shown below.

OK

Terminals 4 and 5	No continuity
Terminals 1 and 3 Terminals 2 and 4	Continuity

P
1. Apply battery positive voltage between terminals 1 and 3.
2. Check continuity between each pair of terminal shown below.

OK

Terminals 2 and 4	No continuity
Terminals 4 and 5	Continuity

OK

NG → **Replace heater relay.**

3 Check HTR fuse.

OK

NG → **Check for short in all the harness and components to the HTR fuse (See attached wiring diagram).**

Check and repair harness and connector between A/C amplifier and battery.

Blower Motor Circuit

CIRCUIT DESCRIPTION

This is the power source for the blower motor.

WIRING DIAGRAM

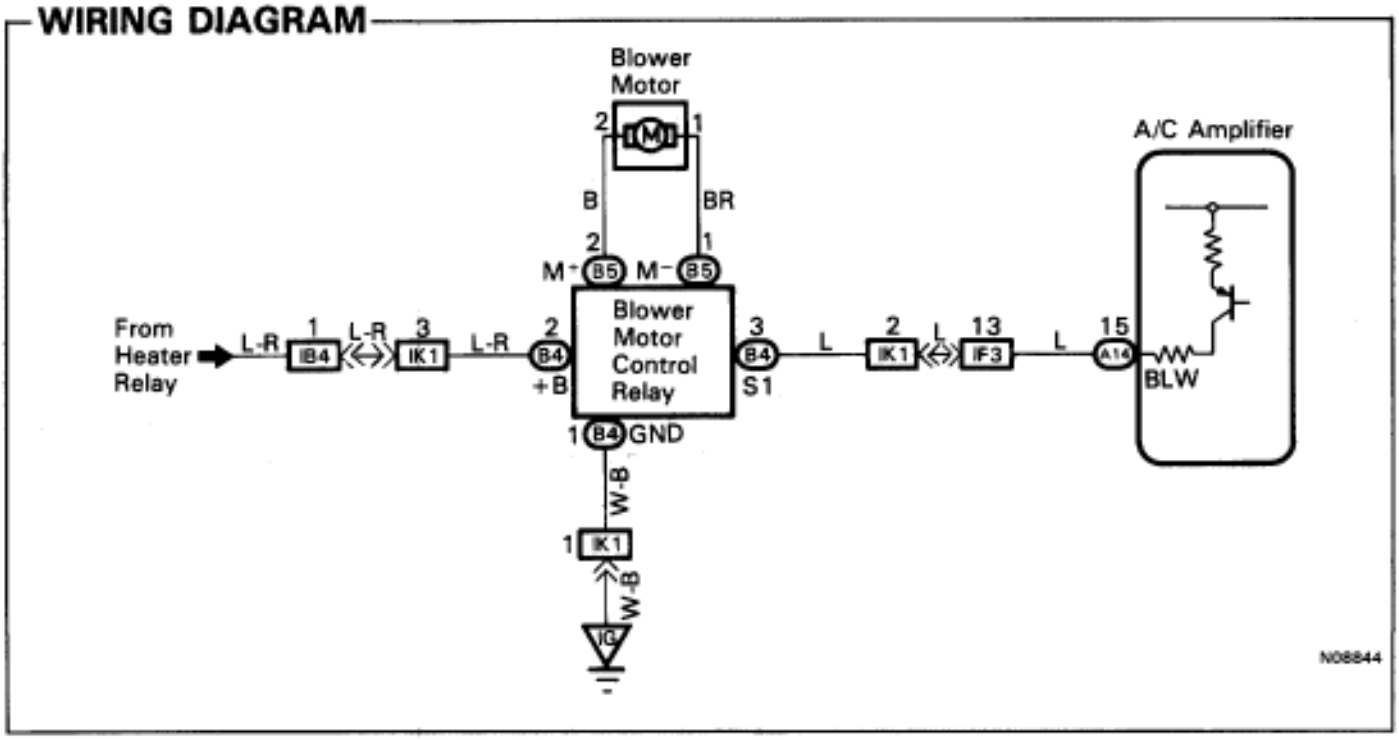

INSPECTION PROCEDURE

1 Check voltage between terminal BLW of A/C amplifier connector and body ground.

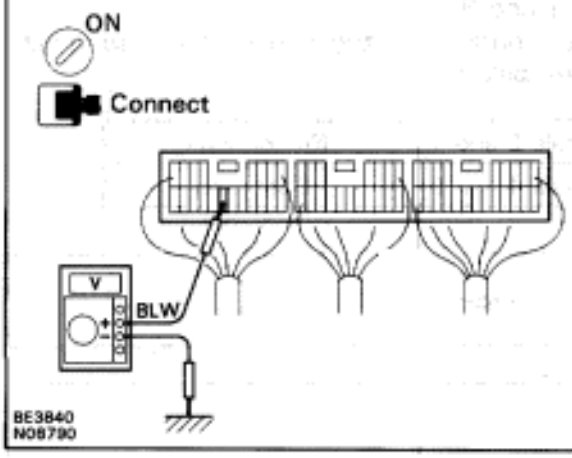

P Remove the A/C amplifier with connector still connected

C
1. Turn ignition switch To ON.
2. Operate blower motor.
3. Measure voltage between terminals BLW of A/C amplifier connector and body ground.

OK **Voltage: 1 – 3 V**

NG

OK → **Proceed to next circuit inspection shown on matrix chart (See page AC–26).**

Go to step 2.

2 Check blower motor.

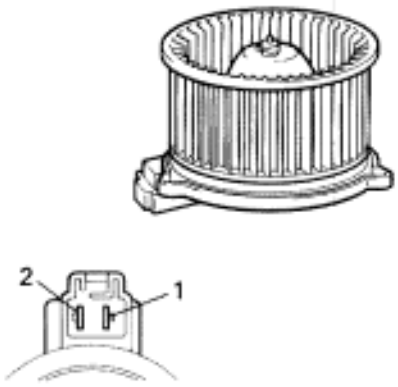

P Remove blower motor control (see page AC–99).

C Connect positive (+) lead to terminal 2 of blower motor connector, negative (–) lead to terminal 1.

OK **Blower motor operates smoothly.**

OK

NG **Replace blower motor.**

Go to step 3.

3 Check blower motor control relay.

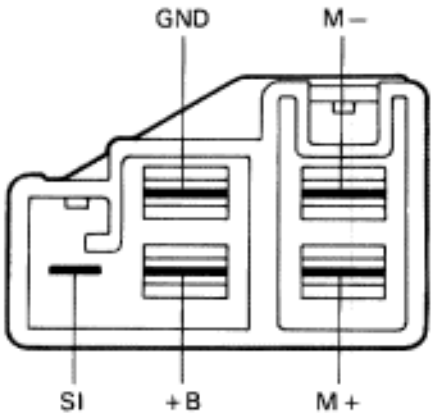

P Remove blower motor control relay with connectors still connected

C
1. Turn ignition switch To ON.
2. Operate blower motor.

OK

Terminals	Standard Value
GND ↔ Body Ground	Continuity
+B ↔ Body Ground	Battery Positive Voltage
M+ ↔ Body Ground	Battery Positive Voltage
M+ ↔ M–	Battery Positive Voltage
SI ↔ Body Ground	1 ~ 3 V

OK

NG **Replace blower motor control relay.**

Repair or replace harness or connector

Compressor Circuit

CIRCUIT DESCRIPTION

The A/C amplifier outputs the magnetic clutch ON signal from terminal MGC to the ECM. When the ECM receives this signal, it sends a signal from terminal ACMG and switches the air conditioning magnetic clutch relay ON, thus turning the air conditioning compressor magnetic clutch ON.

WIRING DIAGRAM

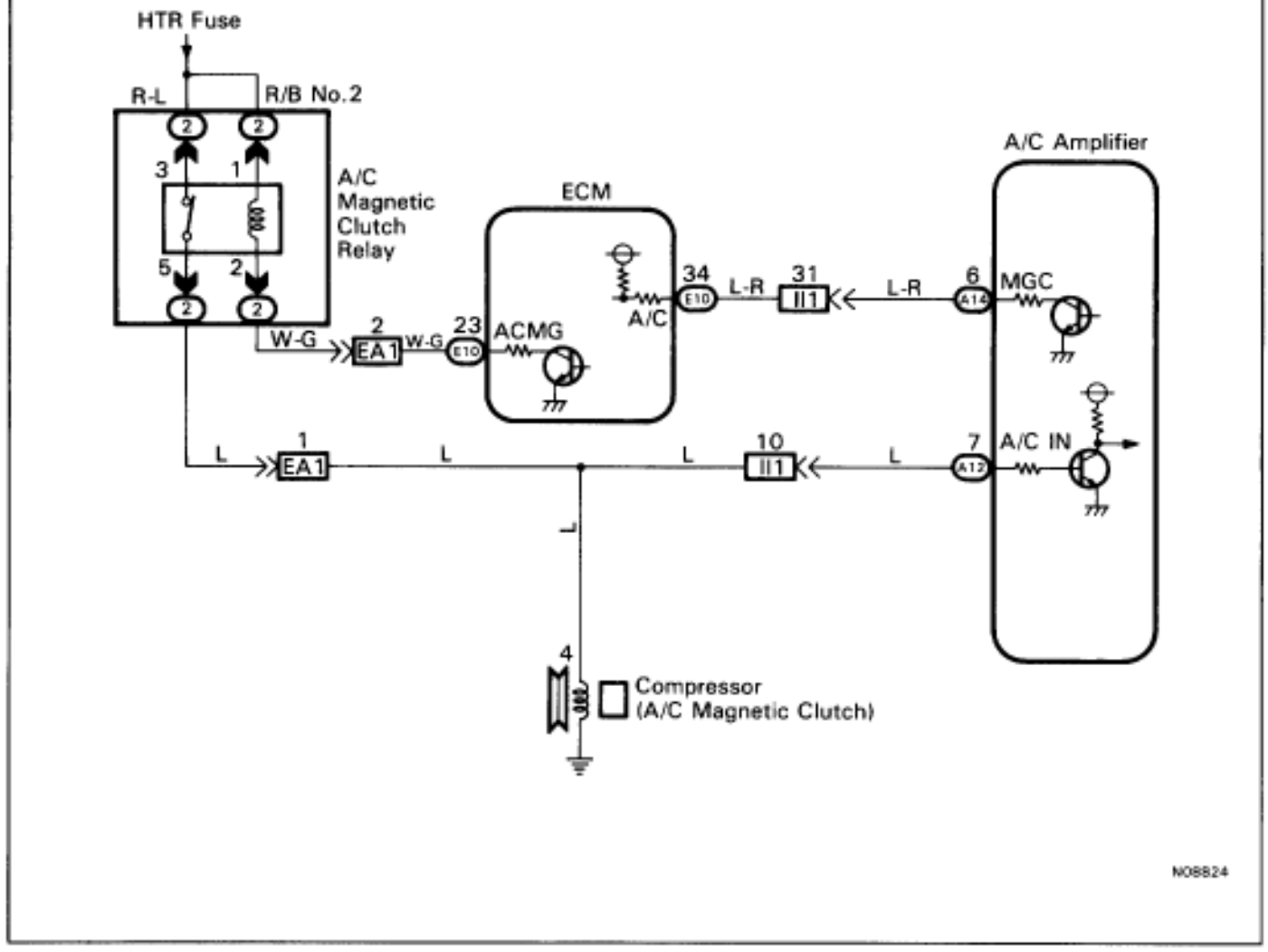

INSPECTION PROCEDURE

1 Check voltage between terminal A/C IN of A/C amplifier connector and body ground.

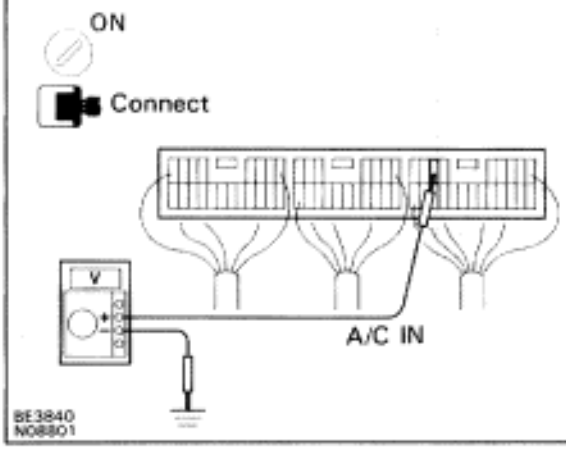

P
1. Remove A/C amplifier with connectors still connected.
2. Start the engine.

C Check voltage between terminal A/C IN of A/C amplifier connector and body ground when magnetic clutch is on and off by A/C switch.

OK

Magnetic Clutch	Voltage
ON	10 – 14 V
OFF	Below 1 V

OK

NG Go to step 4.

2 Check air conditioning compressor magnetic clutch.

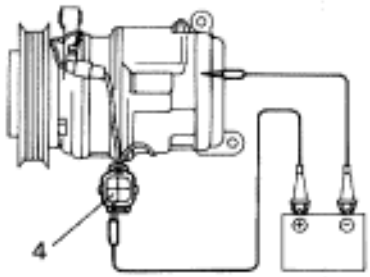

P Disconnect magnetic clutch connector.

C Connect positive (+) lead connected to battery to magnetic clutch connector terminal 4.

OK **Magnetic clutch is energized.**

OK

NG **Repair air conditioning compressor magnetic clutch.**

3 Check for open and short in harness and connector between air conditioner compressor and magnetic clutch relay (See page IN–30).

OK

NG **Repair or replace harness or connector.**

Go to step 4.

4 Check voltage between terminal MGC of A/C amplifier connector and body ground.

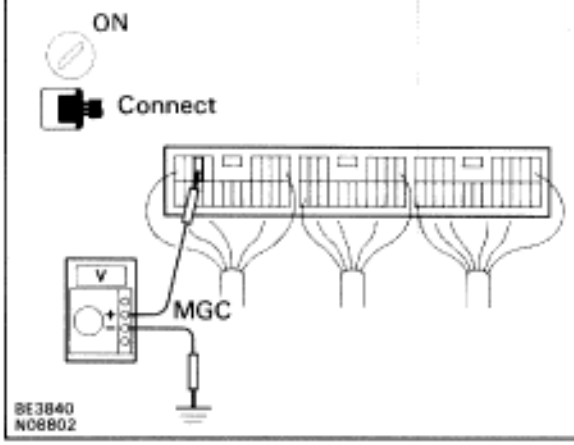

P
1. Remove A/C amplifier with connectors still connected.
2. Start the engine.

C Check voltage between terminal A/C IN of A/C amplifier connector and body ground when magnetic clutch is on and off by A/C switch.

OK

Magnetic Clutch	Voltage
ON	Below 1 V
OFF	4 – 6 V

NG

OK Go to step 7.

5 Check voltage between terminal A/C of ECM and body ground.

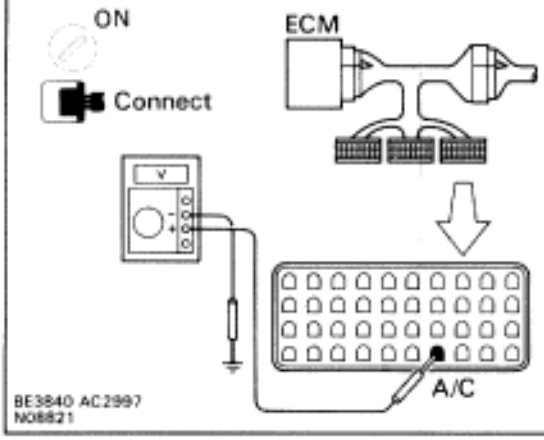

P
1. Remove the ECM with connectors still connected.
2. Turn ignition switch on.

C
1. Push the A/C switch on.
2. Measure voltage between terminal A/C of the ECM connector and body ground.

OK

Magnetic Clutch	Voltage
ON	Below 1 V
OFF	10 – 14 V

OK

NG Check and replace ECM.

6 Check for open and short in harness and connector between A/C amplifier and ECM (See page IN–30).

OK

NG Repair or replace harness or connector.

Check and replace A/C amplifier.

7 Check magnetic clutch relay.

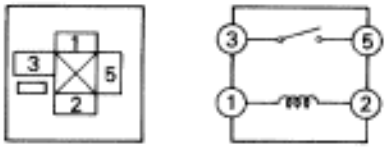

NC8833

P Remove magnetic clutch relay from R/B No. 2.

C Check continuity between each pair of terminals shown below of magnetic clutch relay.

OK

Terminals 1 and 2	Approx. 75 Ω
Terminals 3 and 5	No continuity

P
1. Apply battery positive voltage between terminals 1 and 2.
2. Check continuity between terminals 3 and 5.

OK

Terminals 3 and 5	Continuity

OK →

NG → **Replace magnetic relay.**

8 Check voltage between terminal ACMG of ECM and body ground.

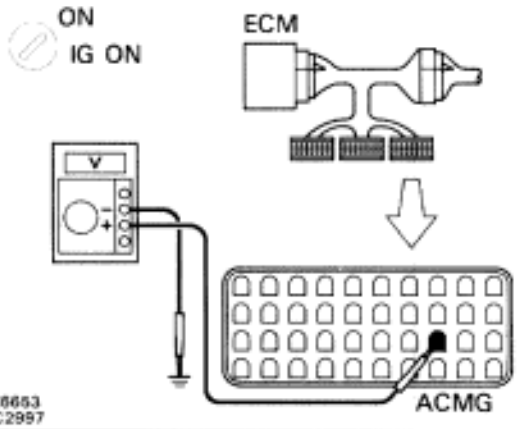

BE6653
AC2997

P
1. Remove the ECM with connectors still con nected.
2. Turn ignition switch on.

C
1. Turn fan speed control dial (Lo, Med or Hi).
2. Measure voltage between terminal ACMG of the ECM connector and body ground.

OK

A/C Switch	Voltage
ON	Approx. 1.3. V
OFF	Battery positive voltage ~ 1.3 V

NG →

OK → **Proceed to next circuit inspection shown on matrix chart (See page AC–26).**

9 Check for open and short in harness and connector between the ECM and battery (See page IN–30).

OK →

NG → **Repair or replace harness or connector.**

Check and replace the ECM.

A C Control Assembly Circuit

CIRCUIT DESCRIPTION

This circuit includes the control switch circuit and the LED circuit in the A/C control Assembly.
The A/C amplifier always searches which switch is operated and drives the LED according to A/C control operation or diagnostic sensor check operation.

WIRING DIAGRAM

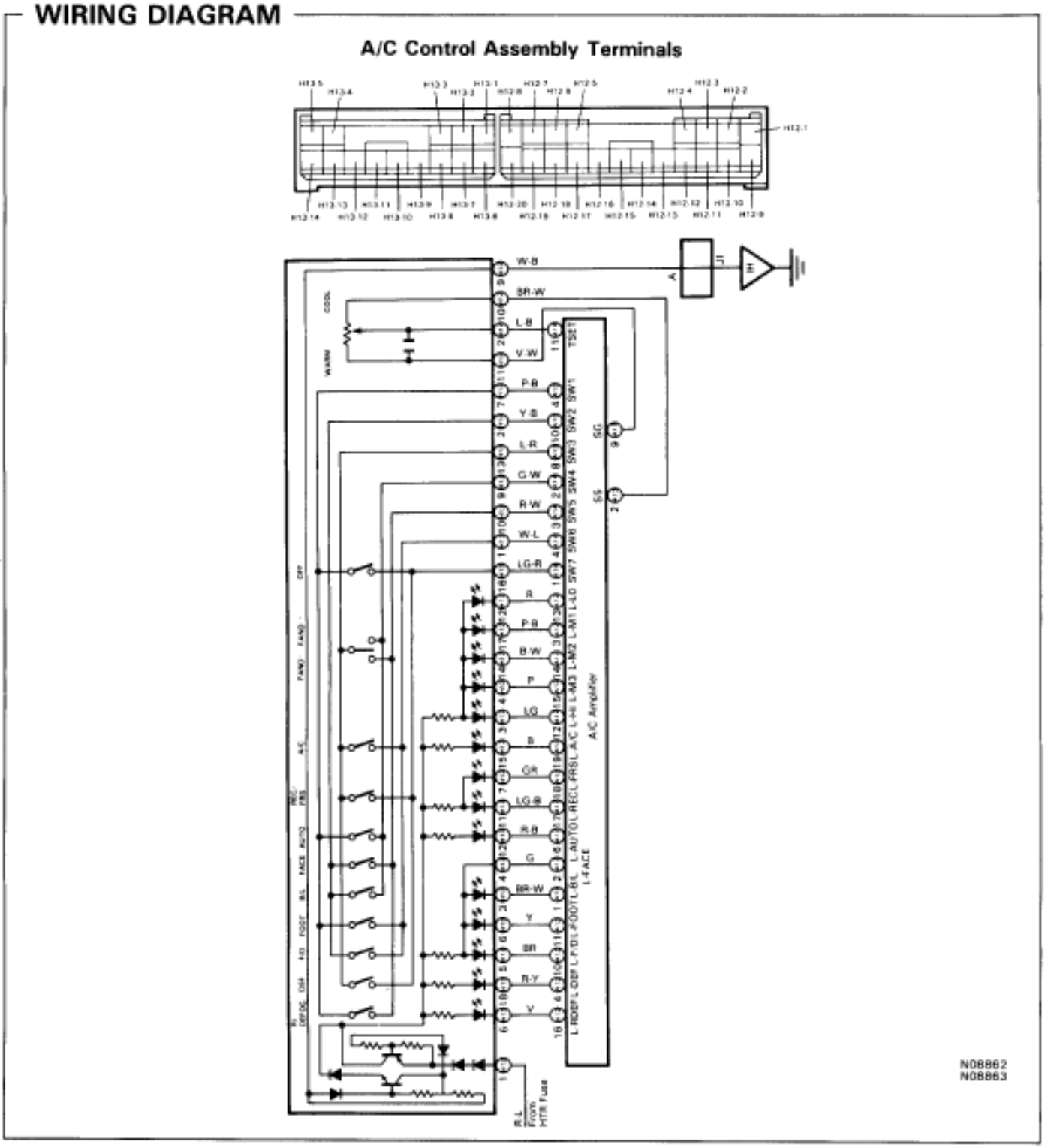

INSPECTION PROCEDURE

1 Check the each LED lights up when the applicable switch is operated.

C

1. Push each switch or turn fan sped dial on the A/C control assembly.
2. Check LED lighting according to switch operation.

NG

OK: **Proceed to next circuit inspection shown on matrix chart (See page AC–26).**

All LED OFF

YES: **Check IG switch circuit.**

NO

2 Check voltage between terminal for LED (OFF) and terminal H12–9 of A/C control assembly.

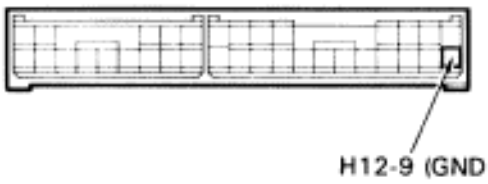

N08864

C

1. Push the switch on or OFF.
2. Check voltage between terminal for the LED (OFF) and terminal H12–9 of A/C control as sembly.

OK

Switch	Voltage
ON	Below 1.0 V
OFF	10 ~ 14 V

NG

OK: **Repair or replace A/C control assembly.**

3 Check continuity of harness between A/C amplifier and A/C control assembly.

OK

NG: **Repair or replace harness or connector.**

Go to step 4.

4 Check continuity of switch circuit in A/C control assembly.

P Remove A/C control assembly and disconnect con nectors.

C
1. Push the control switch on or Off.
2. Check continuity between terminals as follows.

Switch	SW1	SW2	SW3	SW4	SW5	SW6	SW7
	H13-7	H13-2	H12-13	B13-9	H13-10	B13-1	H12-16
OFF	○						○
R/F		○					○
DEF			○				○
FOOT	○					○	
F/D		○				○	
A/C			○			○	
RDEF	○				○		
FACE		○			○		
FAND⁻			○		○		
AUTO	○			○			
B/L		○		○			
FAND⁺			○	○			

FAND – : Turn fan speed dial counterclockwise.
FAND + : Turn fan speed dial clockwise.

OK

Switch	Check result
ON	Continuity
OFF	No continuity

OK

Check and replace A/C amplifier.

NG **Repair or replace A/C control assembly.**

Temperature Set Dial Circuit

CIRCUIT DESCRIPTION

When temperature set dial is turned, the voltage of TSET terminal will change. A/C amplifier searches for this change and controls the room temperature according to the temperature set.

WIRING DIAGRAM

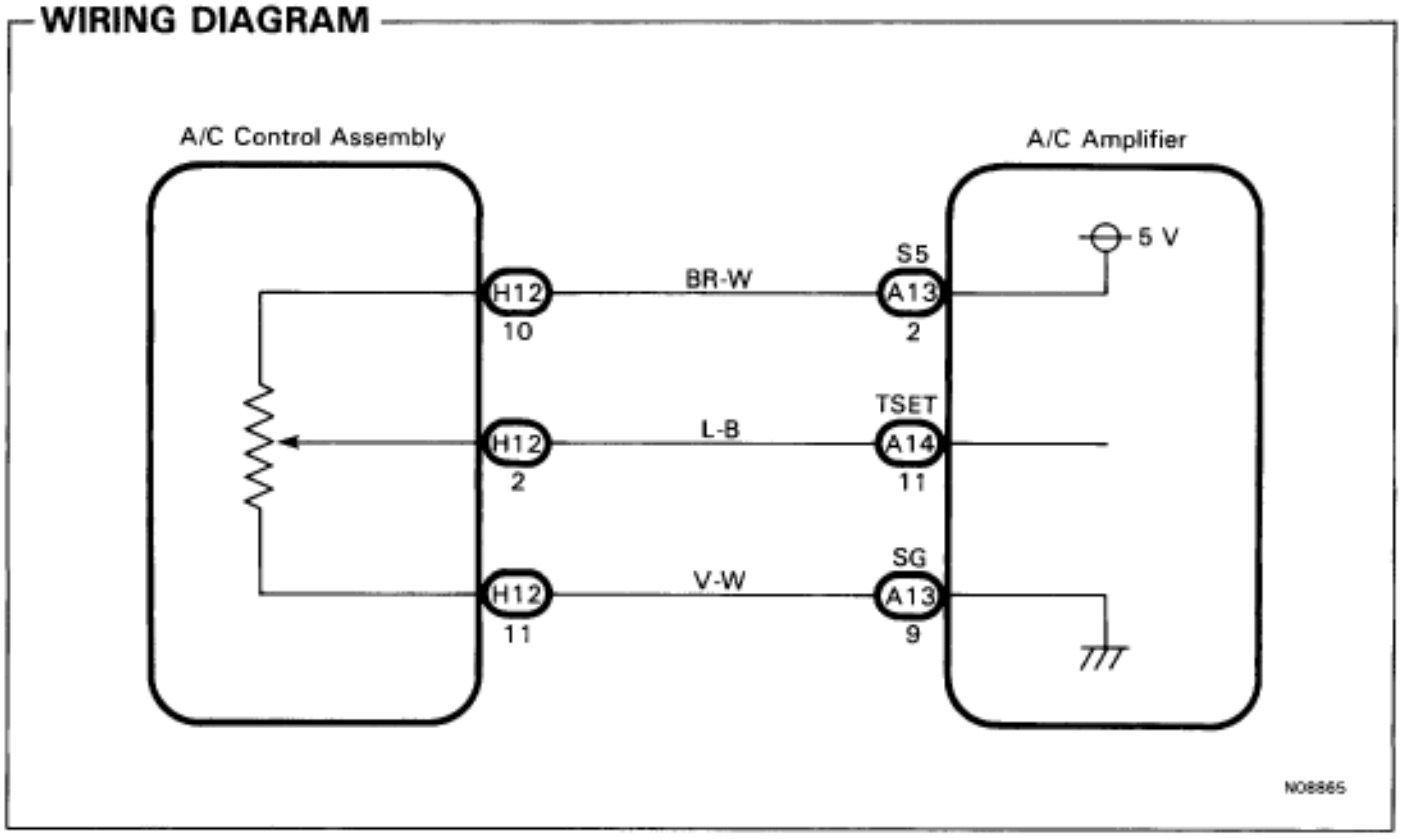

INSPECTION PROCEDURE

1 Check voltage of TSET terminal on A/C amplifier.

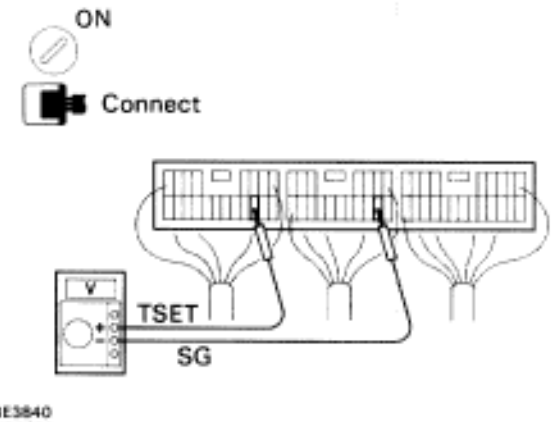

P Remove A/C amplifier with connectors still connected.

C
1. Turn temperature set dial.
2. Check voltage between terminals TSET and SG of A/C amplifier.

OK

Set Temperature	Voltage
20°C (68°F)	3.88 V
25°C (77°F)	2.50 V
30°C (86°F)	1.12 V

NG

OK → **Proceed to next circuit inspection shown on matrix chart (See page AC–26).**

2 Check voltage of terminal on A/C control assembly.

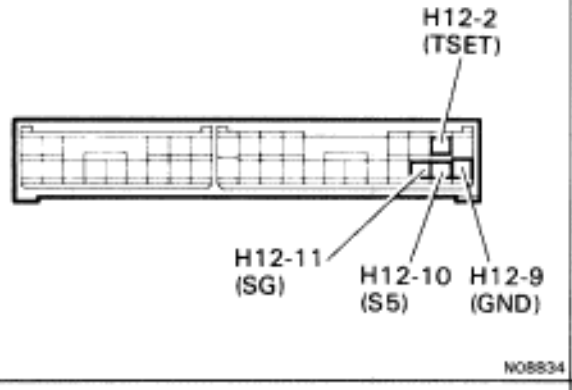

P Remove A/C control assembly with connectors still connected.

C Check voltage between following terminal and H12–9 (GND) of A/C control assembly connectors.

OK

Check Terminals	Voltage
H12-10 ⊕ – ⊖ H12-9	4.5 – 5.5 V
H12-11 ⊕ – ⊖ H12-9	Below 1.0 V
H12-2 ⊕ – ⊖ H12-9	See procedure 1 .

NG

OK → **Repair or replace harness or connectors between A/C amplifier and A/C control assembly.**

3 Check harness and connectors for S5 and SG signal.

OK

NG → **Repair or replace harness or connectors between A/C amplifier and A/C control assembly.**

Replace A/C control assembly.

REFRIGERANT SYSTEM INSPECTION WITH MANIFOLD GAUGE SET

This is a method in which the trouble is located by using a manifold gauge set.
(See “USE OF MANIFOLD GAUGE SET” on page AC–11)
Read the manifold gauge pressure when the following conditions are established:

(a) Temperature at the air inlet with the switch set at RECIRC is 30–35 ˚C (86–95 ˚F)
(b) Engine running at 1,500 rpm
(c) Blower speed control switch set at high
(d) Temperature control set at max. cool

HINT: It should be noted that the gauge indications may vary slightly due to ambient temperature conditions.

1. NORMALLY FUNCTIONING REFRIGERATION SYSTEM

Gauge reading:

Low pressure side:

0.15–0.25 MPa (1.5–2.5 kgf/cm^2)

High pressure side:

1.37–1.57 MPa (14–16 kgf/cm^2)

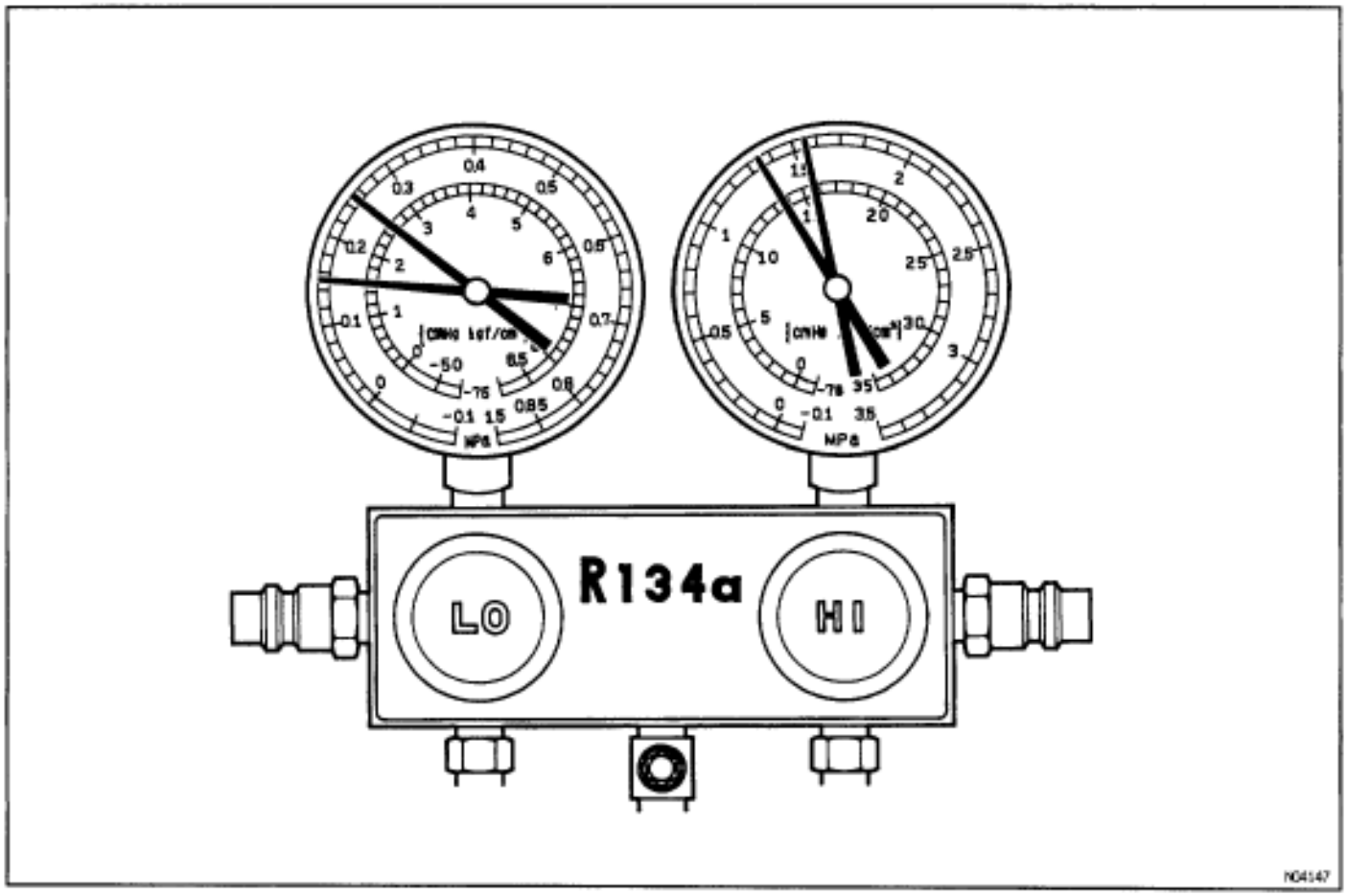

2. MOISTURE PRESENT IN REFRIGERATION SYSTEM

Condition: Periodically cools and then fails to cool

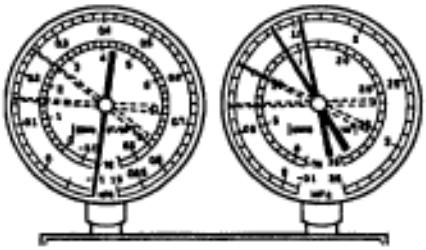

N04145

Symptom seen in refrigeration system	Probable cause	Diagnosis	Remedy
• During operation, pressure on low pressure side sometimes becomes a vacuum and sometimes normal	• Moisture entered in refrigeration system freezes at expansion valve orifice and temporarily stops cycle, but normal state is restored after a time when the ice melts	• Drier in oversaturated state ↓ • Moisture in refrigeration system freezes at expansion valve orifice and blocks circulation of refrigerant	(1) Replace receiver/drier (2) Remove moisture in cycle through repeatedly evacuating air (3) Charge new refrigerant to proper amount

3. INSUFFICIENT REFRIGERANT

Condition: insufficient cooling

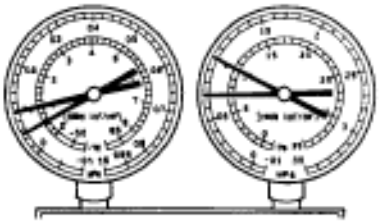

N04149

Symptom seen in refrigeration system	Probable cause	Diagnosis	Remedy
• Pressure low on both low and high pressure sides • Bubbles seen in sight glass continuously • insufficient cooling performance	• Gas leakage at some place in refrigeration system	• Insufficient refrigerant in system • Refrigerant leaking	(1) Check for gas leakage with leak detector and repair if necessary (2) Charge refrigerant to proper amount (3) If pressure indicated value is near 0 when connected to gauge, create the vacuum after inspecting and repairing the location of the leak

4. POOR CIRCULATION OF REFRIGERANT

Condition: insufficient cooling

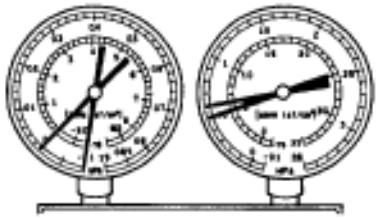

Symptom seen in refrigeration system	Probable cause	Diagnosis	Remedy
• Pressure low on both low and high pressure sides • Frost on tubes from receiver to unit	• Refrigerant flow obstructed by dirt in receiver	• Receiver clogged	• Replace receiver

5. REFRIGERANT DOES NOT CIRCULATE

Condition: **Does not cool (Cools from time to time in some cases)**

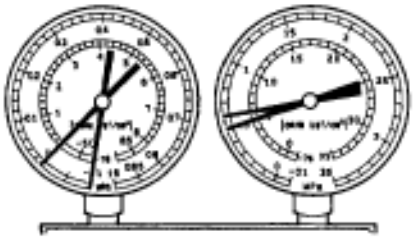

Symptom seen in refrigeration system	Probable cause	Diagnosis	Remedy
• Vacuum indicated on low pressure side, very low pressure indicted on high pressure side • Frost or dew seen on piping before and after receiver/drier or expan–sion valve	• Refrigerant flow obstructed by moisture or dirt in refrigeration system • Refrigerant flow ob–structed by gas leakage from expansion valve heat sensing tube	• Refrigerant does not circulate	(1) Check heat sensing tube, expansion valve and ERP (2) Clean out dirt inexpan–sion valve by blowing with air If not able to remove dirt, replace expansion valve (3) Replace receiver (4) Evacuate air and charge new refrigerant to proper amount. for gas leakage from heat sensing tube, re place expansion valve.

6. REFRIGERANT OVERCHARGE OR INSUFFICIENT COOLING OF CONDENSER

Condition: Insufficient Cooling

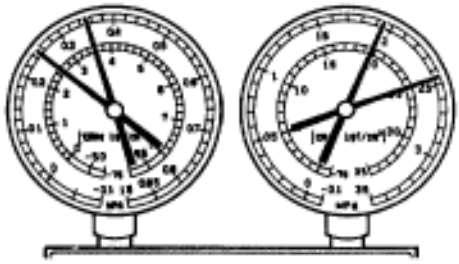

N04151

Symptom seen in refrigeration system	Probable cause	Diagnosis	Remedy
• Pressure too high on both low and high pressure sides • No air bubbles seen through the sight of glass even when the engine rpm is lowered.	• Unable to develop sufficient performance due to excessive refrigerant in system • Insufficient cooling of condenser	• Excessive refrigerant in in cycle → refrigerant overcharged • Condenser cooling insufficient → condenser fins clogged or fan motor faulty	(1) Clean condenser (2) Check fan motor operation (3) If (1) and (2) are in normal state, check amount of refrigerant Charge proper amount of refrigerant

7. AIR PRESENT IN REFRIGERATION SYSTEM

Condition: insufficient cooling

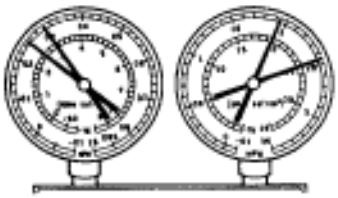

NOTE: These gauge indications are shown when the refrigeration system has been opened and the refrigerant charged without vacuum purging.

N04153

Symptom seen in refrigeration system	Probable cause	Diagnosis	Remedy
• Pressure too high on both low and high pressure sides • The low pressure piping is hot to the touch • Bubbles seen in sight glass	• Air entered in refrigeration system	• Air present in refrigeration system ↓ • Insufficient vacuum purging	(1) Check compressor oil to see if dirty or insufficient (2) Evacuate air and charge new refrigerant

V01033

8. EXPANSION VALVE IMPROPERLY MOUNTED/HEAT SENSING TUBE DEFECTIVE (OPENS TOO WIDE)

Condition: Insufficient cooling

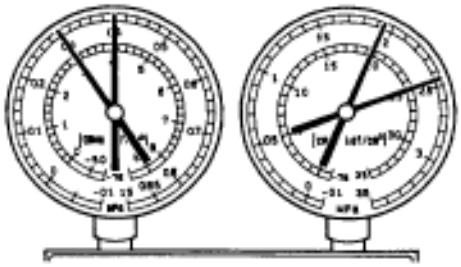

N04152

Symptom seen in refrigeration system	Probable cause	Diagnosis	Remedy
• Pressure too high on both low and high pressure sides • Frost or large amount of dew on piping on low pressure side	• Trouble in expansion valve or heat sensing tube not installed correctly	• Excessive refrigerant in low pressure piping ↓ • Expansion valve opened too wide	(1) Check heat sensing tube installed condition (2) if (1) is normal, check expansion valve Replace if defective

9. DEFECTIVE COMPRESSION COMPRESSOR

Condition: Does not cool

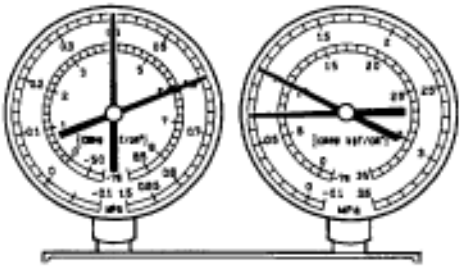

N04146

Symptom seen in refrigeration system	Probable cause	Diagnosis	Remedy
• Pressure too high on low pressure sides • Pressure too low on high pressure side	• Internal leak in compressor	• Compression defective ↓ • Valve leaking or broken, sliding parts	• Repair or replace compressor

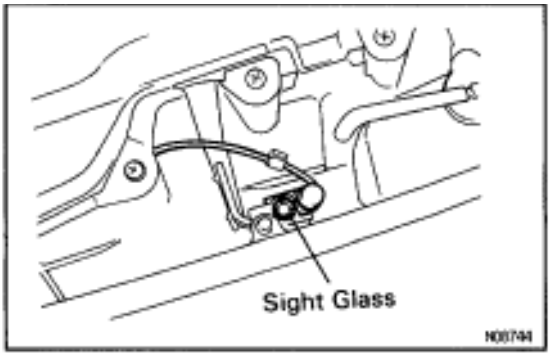

REFRIGERANT VOLUME

REFRIGERANT VOLUME INSPECTION

1. **RUN ENGINE AT APPROX. 1,500 RPM**
2. **SET TEMPERATURE CONTROL AT MAX. COOL**
3. **SET BLOWER SWITCH AT "HI"**
4. **SET AIR INLET CONTROL AT "RECIRC"**
5. **TURN A/C SWITCH ON**
6. **FULLY OPEN DOORS**
7. **INSPECT AMOUNT OF REFRIGERANT**
   Observe the sight glass on the liquid tube.

Item	Symptom	Amount of refrigerant	Remedy
1	Bubbles present in sight glass	Insufficient*	(1) Check for gas leakage with gas leak tester and repair if necessary (2) Add refrigerant until bubbles dis–appear
2	No bubbles present in sight glass	None, sufficient or too much	Refer to items 3 and 4
3	No temperature difference between compressor inlet and outlet	Empty or nearly empty	(1) Check for gas leakage with gas leak tester and repair if necessary (2) Add refrigerant until bubbles disap-pear
4	Temperature between compressor inlet and outlet is noticeably different	Correct or too much	Refer to items 5 and 6
5	Immediately after air conditioning is turned off, refrigerant in sight glass stays clear	Too much	(1) Discharge refrigerant (2) Evacuate air and charge proper amount of purified refrigerant
6	When air conditioning is turned off, refrigerant foams and then stays clear	Correct	—

* Bubbles in the sight glass with ambient temperatures higher than usual can be considered normal if cooling is sufficient.

REFRIGERANT CHARGE VOLUME

Specified amount:

700 ± 50 g (24.96 ± 1.76 oz.)

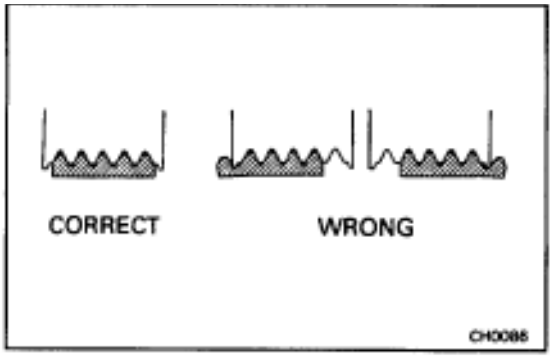

DRIVE BELT TENSION

DRIVE BELT TENSION INSPECTION

1. INSPECT DRIVE BELT'S INSTALLATION CONDITION

Check that drive belt fits properly in the ribbed grooves.

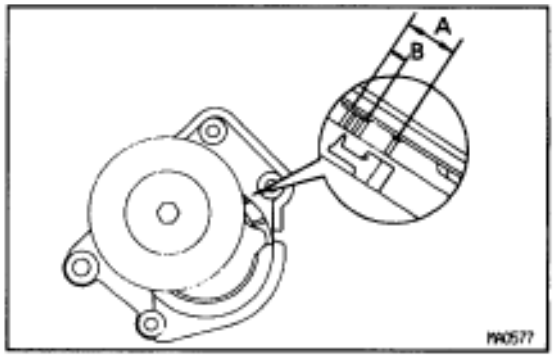

2. INSPECT DRIVE BELT TENSION

Check that the tension is within A range on the auto tensioner scale.

If the tension is not within the A range on the scale, replace the belt with a new one.

HINT: When replacing the drive belt with a new one, the belt's tension should be within the B range on the belt tensioner scale.

IDLE–UP SPEED

IDLE UP SPEED INSPECTION

1. WARM UP ENGINE

2. INSPECT IDLE SPEED

Put gear shift in neutral.

2JZ–GE (M/T)

Magnetic clutch condition	Standard idle speed (RPM)
Not engaged	Approx. 700
Engaged	Approx. 900

2JZ–GE (A/T)

Magnetic clutch condition	Standard idle speed (RPM)
Not engaged	Approx. 700
Engaged	Approx. 800

2JZ–GTE

Magnetic clutch condition	Standard idle speed (RPM)
Not engaged	Approx. 650
Engaged	Approx. 800

REFRIGERANT LINES

TIGHTENING TORQUE OF REFRIGERATION LINES

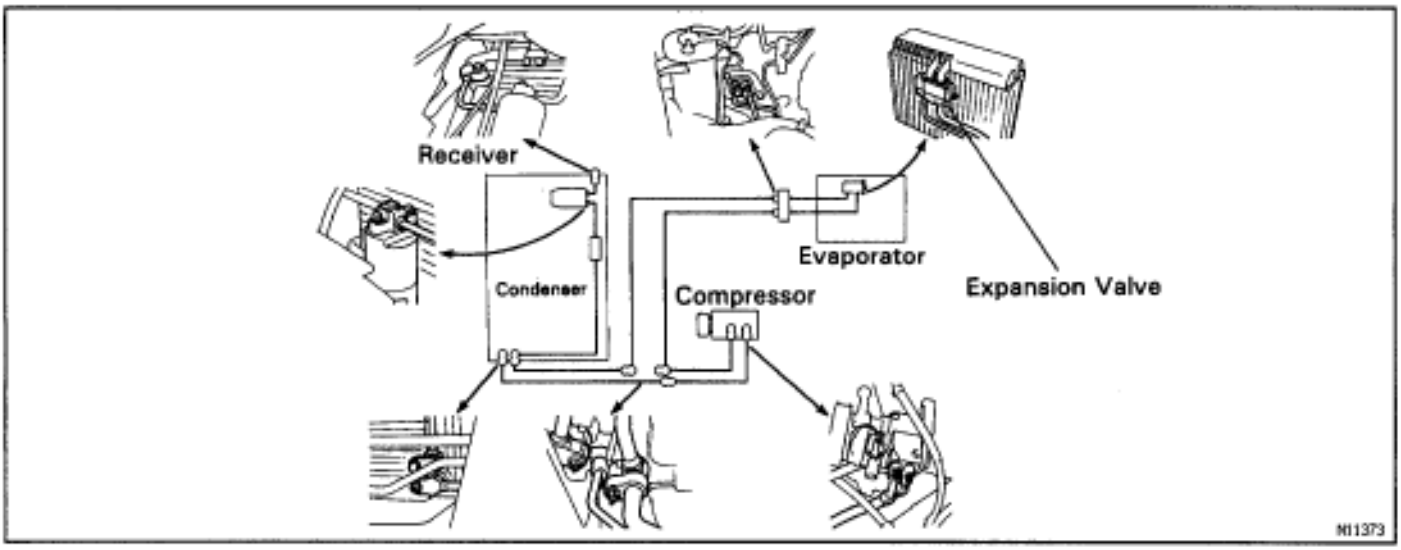

ON–VEHICLE INSPECTION

1. **INSPECT HOSES AND TUBES FOR LEAKAGE**
   Using a gas leak tester, check for leakage of refrigerant.
2. **INSPECT HOSE AND TUBE CONNECTIONS FOR LOOSENESS**

REFRIGERANT LINES REPLACEMENT

1. **DISCHARGE REFRIGERANT IN REFRIGERATION SYSTEM**
2. **REPLACE FAULTY TUBE OR HOSE**
   NOTICE: To prevent the intrusion of moisture or dirt, caps should be placed on hose or tube ends immediately.
3. **TORQUE CONNECTIONS TO SPECIFIED TORQUE**
   NOTICE: Connections should not be torqued tighter than the specified torque.
   Compressor X Suction tube
   Torque: 10 N·m (100 kgf·cm, 7 ft·lbf)
   Compressor X Discharge tube
   Torque: 10 N·m (100 kgf·cm, 7 ft·lbf)
   Condenser X Discharge tube
   Torque: 10 N·m (100 kgf·cm, 7 ft·lbf)
   Condenser X Liquid tube
   Torque: 10 N·m (100 kgf·cm, 7 ft·lbf)
   Receiver X Liquid tube
   Torque: 5.4 N·m (55 kgf·cm, 48 in.·lbf)
   A/C unit X Liquid tube
   Torque: 10 N·m (100 kgf·cm, 7 ft·lbf)
   A/C unit X Suction tube
   Torque: 10 N·m (100 kgf·cm, 7 ft·lbf)
   Evaporator X Expansion valve
   Torque: 5.4 N·m (55 kgf·cm, 48 in.·lbf)
   Discharge lines
   Torque: 10 N·m (100 kgf·cm, 7 ft·lbf)
   Liquid lines
   Torque: 10 N·m (100 kgf·cm, 7 ft·lbf)
   Suction lines
   Torque: 10 N·m (100 kgf·cm, 7 ft·lbf)
4. **EVACUATE AIR IN REFRIGERATION SYSTEM AND CHARGE WITH REFRIGERANT**
   Specified amount:
   700 ± 50 g (24.96 ± 1.76 oz.)
5. **INSPECT FOR LEAKAGE OF REFRIGERANT**
   Using a gas leak tester, check for leakage of refrigerant.
6. **INSPECT AIR CONDITIONING OPERATION**

AIR CONDITIONING UNIT

AIR CONDITIONING UNIT REMOVAL

1. DISCHARGE REFRIGERANT IN REFRIGERATION SYSTEM

INSTALLATION HINT: Evacuate air from refrigeration system.

Charge system with the refrigerant and inspect for leakage of refrigerant.

Specified amount:

700 ± 50 g (24.96 ± 1.76 oz.)

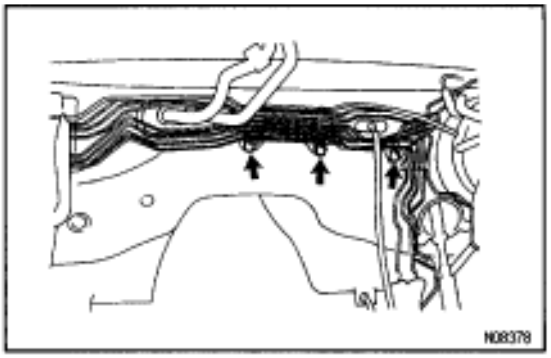

2. DRAIN ENGINE COOLANT FROM RADIATOR AND ENGINE COOLANT DRAIN COCK

3. REMOVE ENGINE WIRE HARNESS BRACKET MOUNTING BOLT

4. REMOVE BRAKE TUBE BRACKET MOUNTING BOLTS FROM DASH PANEL

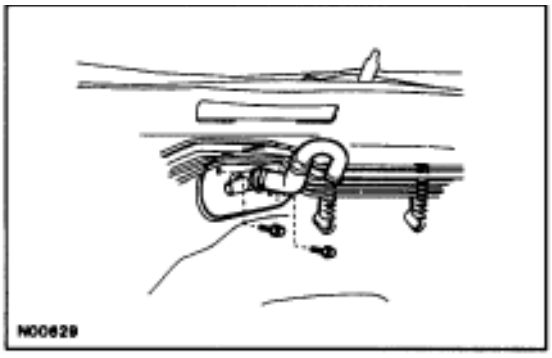

5. REMOVE WATER HOSE FROM HEATER RADIATOR

6. REMOVE INSULATOR RETAINER

Remove the 2 bolts and the insulator retainer.

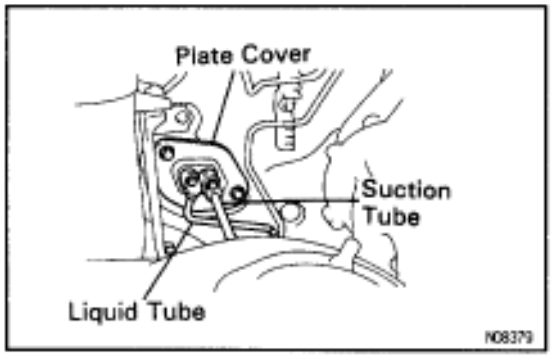

7. REMOVE LIQUID TUBE AND SUCTION TUBE

(a) w/ ABS:

Remove the ABS actuator.

(See page BR–44)

(b) Remove the liquid tube and suction tube.

Torque: 10 N·m (100 kgf·cm, 7 ft·lbf)

INSTALLATION HINT: Lubricate the new O–rings with compressor oil and install tubes.

8. REMOVE PLATE COVER

Remove the 2 bolts and the plate cover.

9. REMOVE INSTRUMENT PANEL AND REINFORCEMENT

(See page BO–45)

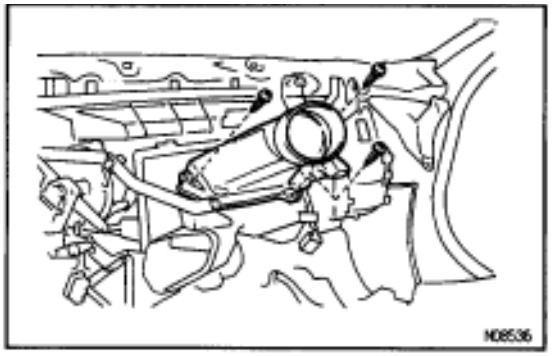

10. REMOVE HEATER TO REGISTER NO. 3 DUCT

Remove the 3 screws and the heater to register No. 3 duct.

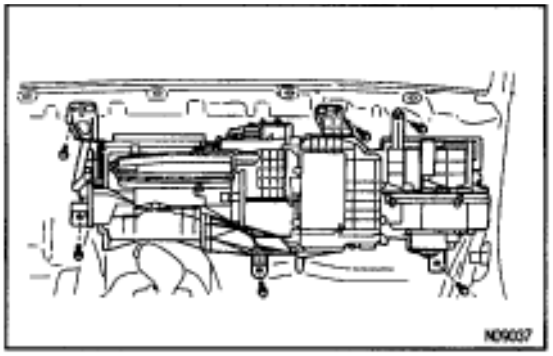

11. REMOVE A/C UNIT

(a) Disconnect connectors from the unit.

(b) Remove the 6 bolts and the A/C unit.

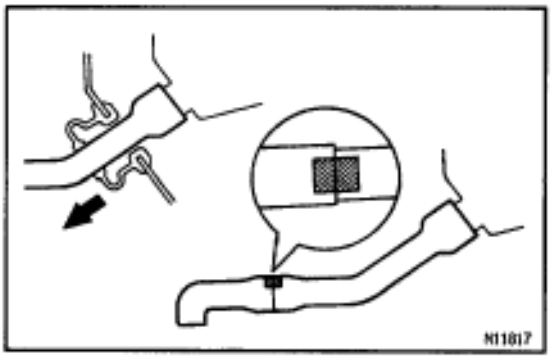

INSTALLATION HINT: Pull the drain hose of the A/C unit forward until the yellow paint on the hose is visible in the engine compartment.

Insert the drain hose into the engine compartment hose until the matchmarks are aligned.

AIR CONDITIONING UNIT DISASSEMBLY

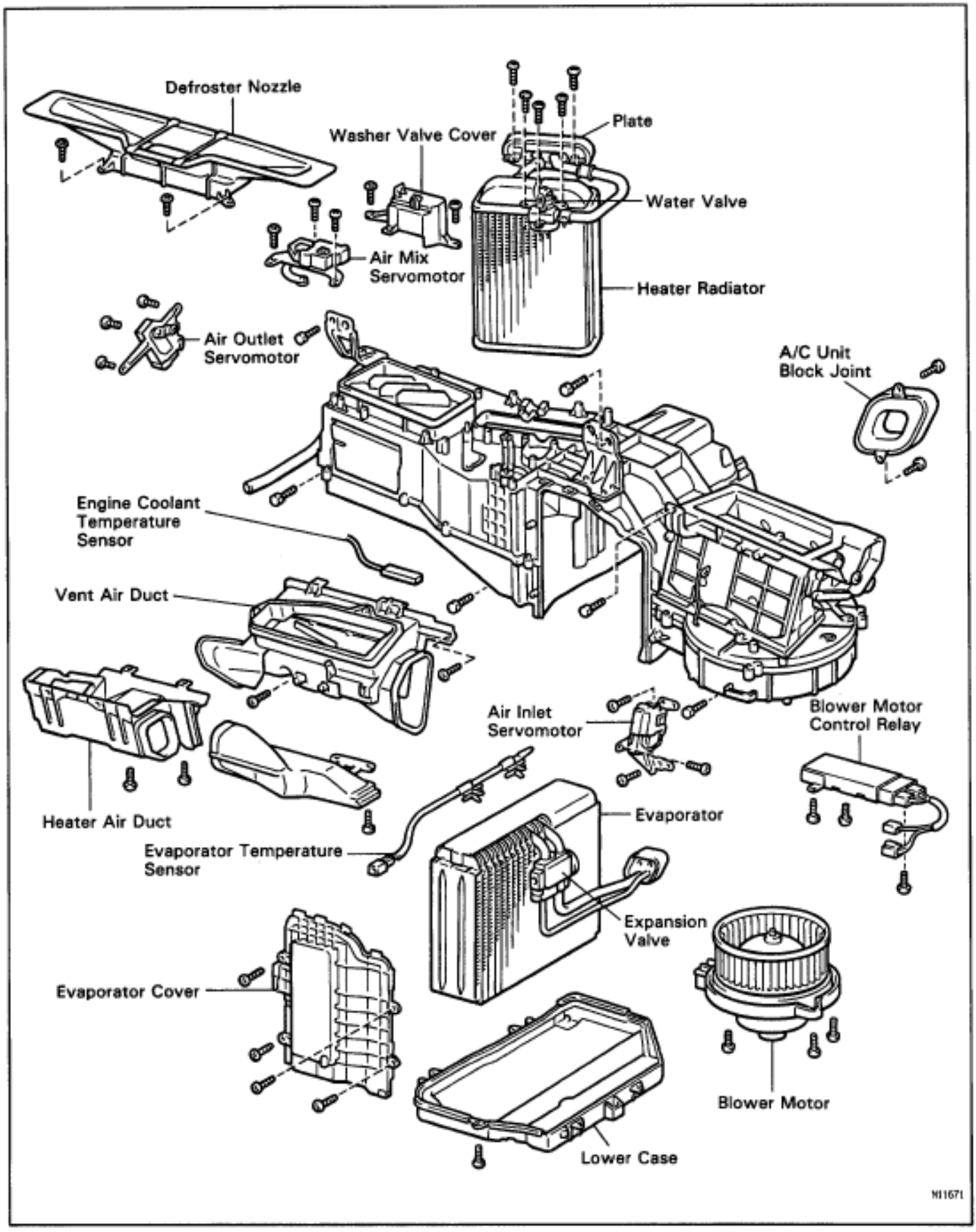

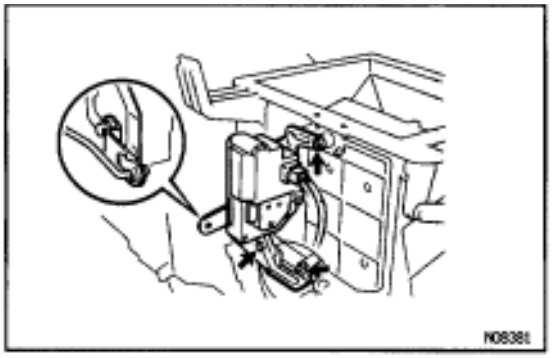

1. REMOVE AIR INLET SERVOMOTOR

(a) Disconnect the connector.
(b) Disconnect the control link.
(c) Remove the 3 screws and the air inlet servomotor.

2. REMOVE BLOWER MOTOR CONTROL RELAY

(a) Disconnect the connector.
(b) Remove the 3 screws and the blower motor control relay.

3. REMOVE BLOWER MOTOR

(a) Disconnect the connector.
(b) Using a torx driver, remove the blower motor.

4. REMOVE EVAPORATOR

(a) Remove the A/C unit wire harness.
(b) Remove the foot air duct.
(c) Remove the A/C unit block joint.
(d) Remove the 6 screws and down and the lower cover.
(e) Remove the 4 screws and the evaporator cover.

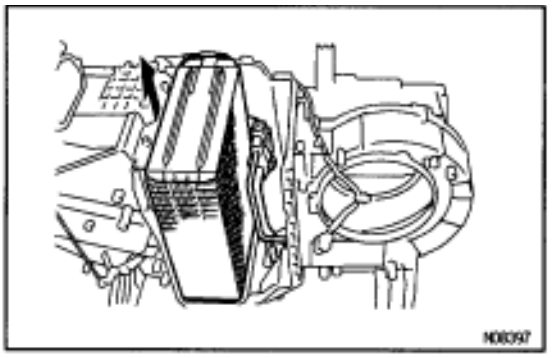

(f) Pull out the evaporator.

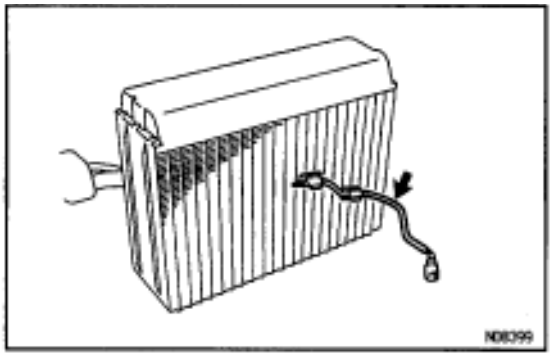

(g) Pull out the evaporator sensor from the evaporator.

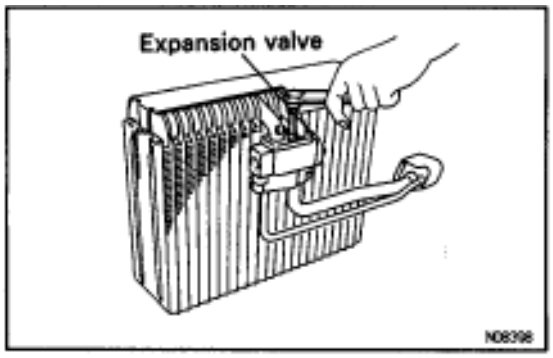

(h) Using a hexagon wrench, remove the 2 bolts and separate the evaporator and expansion valve.

Torque: 5.4 N·m (55 kgf·cm, 48 in.·lbf)

INSTALLATION HINT: If the evaporator was replaced, add compressor oil to the compressor.

Add 40 cc (1.4 fl.oz)
Compressor oil
ND–OIL 8 or equivalent

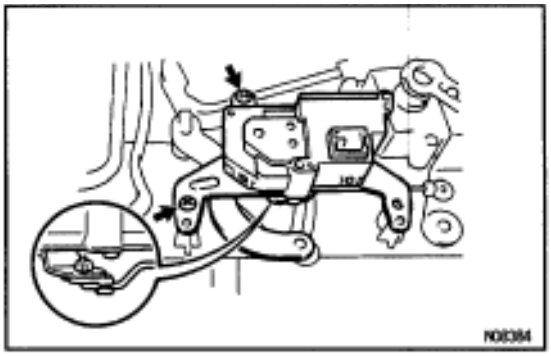

5. REMOVE AIR MIX SERVOMOTO

(a) Remove the defroster duct.
(b) Remove the 3 screws and the water valve cover.
(c) Disconnect the connector.
(d) Disconnect the control link.
(e) Remove the 2 screws and the air mix servomotor.

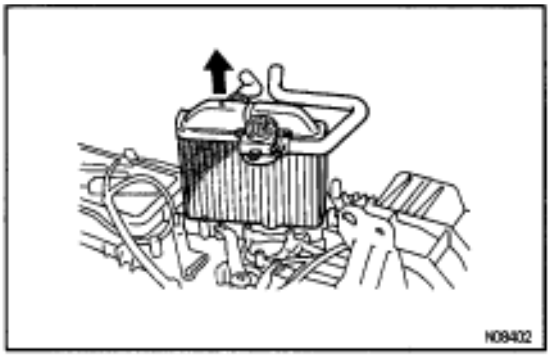

6. REMOVE HEATER RADIATOR AND WATER VALVE

(a) Remove the 2 screws and the plate.
(b) Remove the 2 screws and the clamp.
(c) Remove the 3 screws.
(d) Pull out the heater radiator with the water valve.

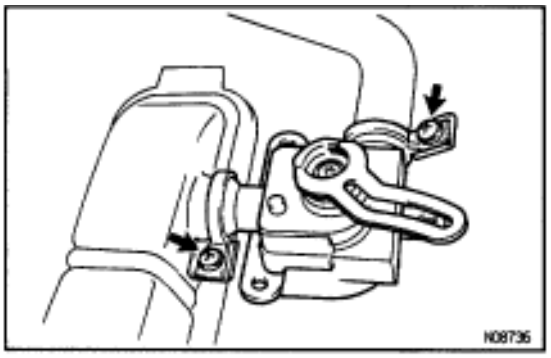

(e) Remove the 2 screws and water valve from the heater radiator.

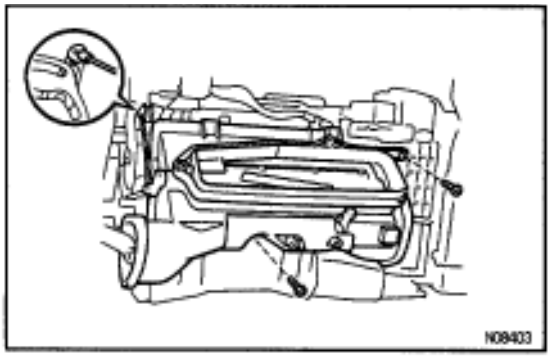

7. REMOVE HEATER AIR DUCT

Remove the 2 screws and the defroster air duct.

8. REMOVE VENT AIR DUCT

(a) Disconnect the control link.
(b) Remove the 2 screws and the vent air duct.

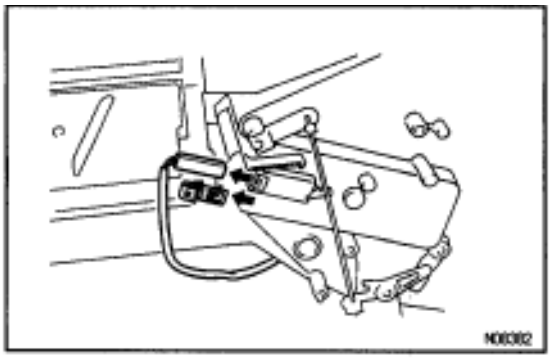

9. REMOVE ENGINE COOLANT TEMPERATURE SENSOR

(a) Disconnect the connector.
(b) After pulling off the clamp, pull out the sensor.

10. REMOVE AIR OUTLET SERVOMOTOR

(a) Disconnect the connector.
(b) Remove the 3 screws and the air outlet servomotor.

AIR CONDITIONING UNIT ASSEMBLY

Assembly is in the reverse order of disassembly.

AIR CONDITIONING UNIT INSTALLATION

Installation is in the reverse order of removal.

COMPRESSOR

ON–VEHICLE INSPECTION

Magnetic Clutch:

(See page AC–62)

Compressor:

1. **INSTALL MANIFOLD GAUGE SET**
   (See page AC–11)
2. **START ENGINE**
3. **INSPECT COMPRESSOR FOR METALLIC SOUND**
   Check that there is metallic sound from the compressor when the A/C switch is turned ON.
   If a metallic sound is heard, replace the compressor assembly.
4. **INSPECT PRESSURE OF REFRIGERATION SYSTEM**
   See ”Refrigeration System Inspection with Manifold Gauge Set” on page AC–71.
5. **STOP ENGINE**
6. **INSPECT VISUALLY FOR LEAKAGE OF REFRIGERANT FROM SAFETY SEAL**
   If there is any leakage, replace the compressor assembly.

COMPRESSOR REMOVAL

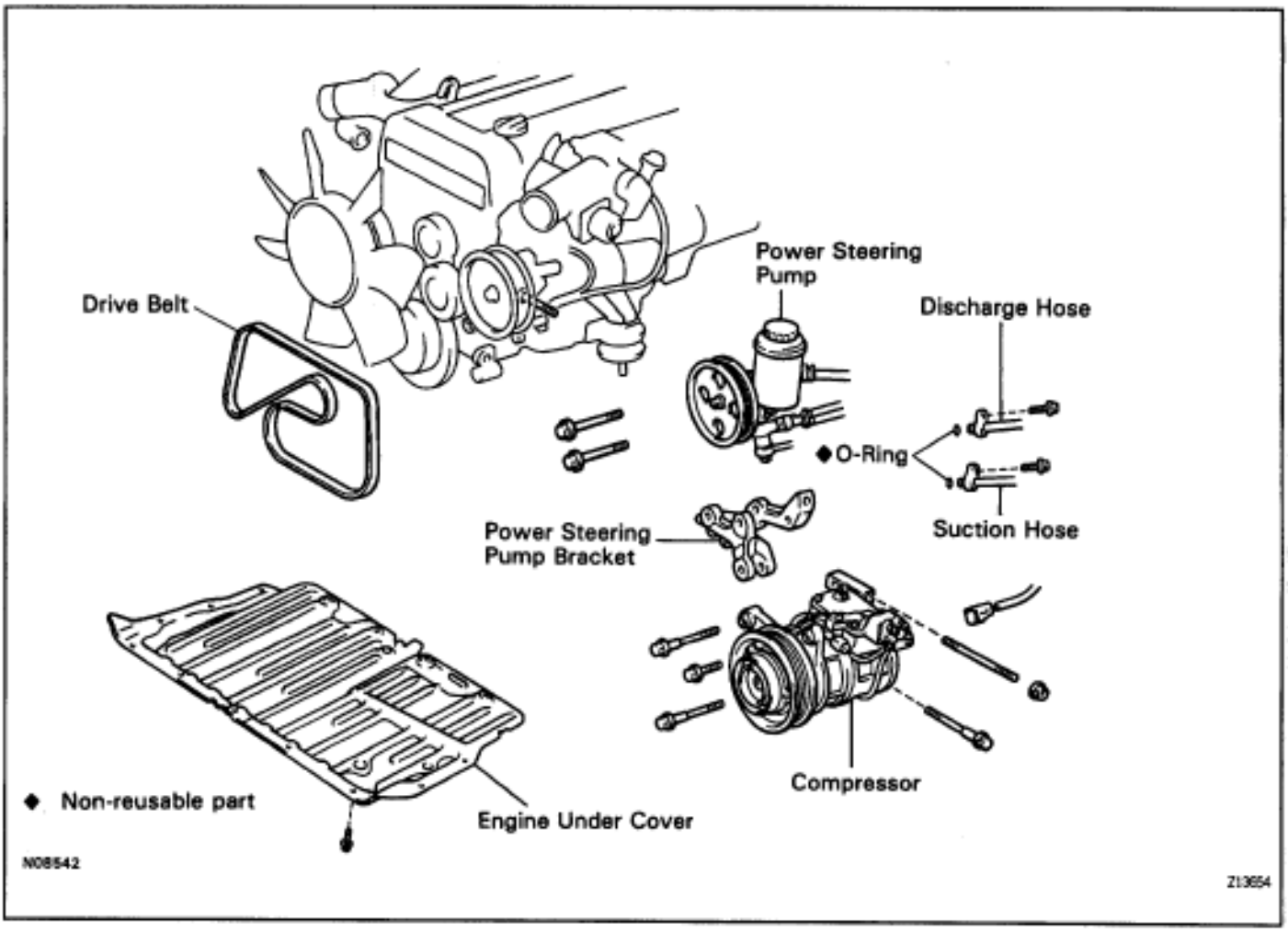

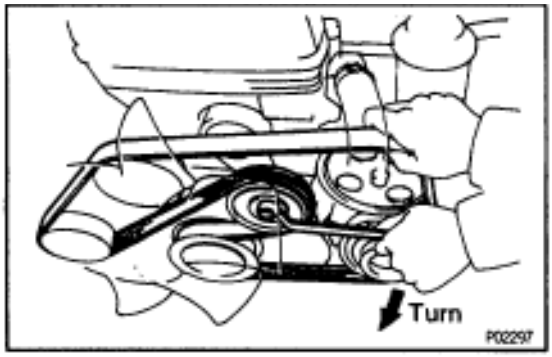

1. **RUN ENGINE AT IDLE SPEED WITH A/C ON FOR APPROX. 10 MINUTES**
2. **STOP ENGINE**
3. **REMOVE BATTERY**
4. **DISCHARGE REFRIGERANT IN REFRIGERATION SYSTEM**
5. **REMOVE DRIVE BELT**
   Loosen the drive belt tension by turning the drive belt tensioner clockwise, and remove the drive belt.
6. **REMOVE POWER STEERING PUMP**
7. **DISCONNECT DISCHARGE HOSE AND SUCTION HOSE FROM COMPRESSOR**
   NOTICE: Cap the open fittings immediately to keep moisture out of the system.
8. **REMOVE COMPRESSOR**

(a) Disconnect connector from compressor.
(b) Remove engine under cover.
(d) Remove the 4 bolts, nut and stud bolt.
(d) Remove the compressor.

MAGNETIC CLUTCH DISASSEMBLY

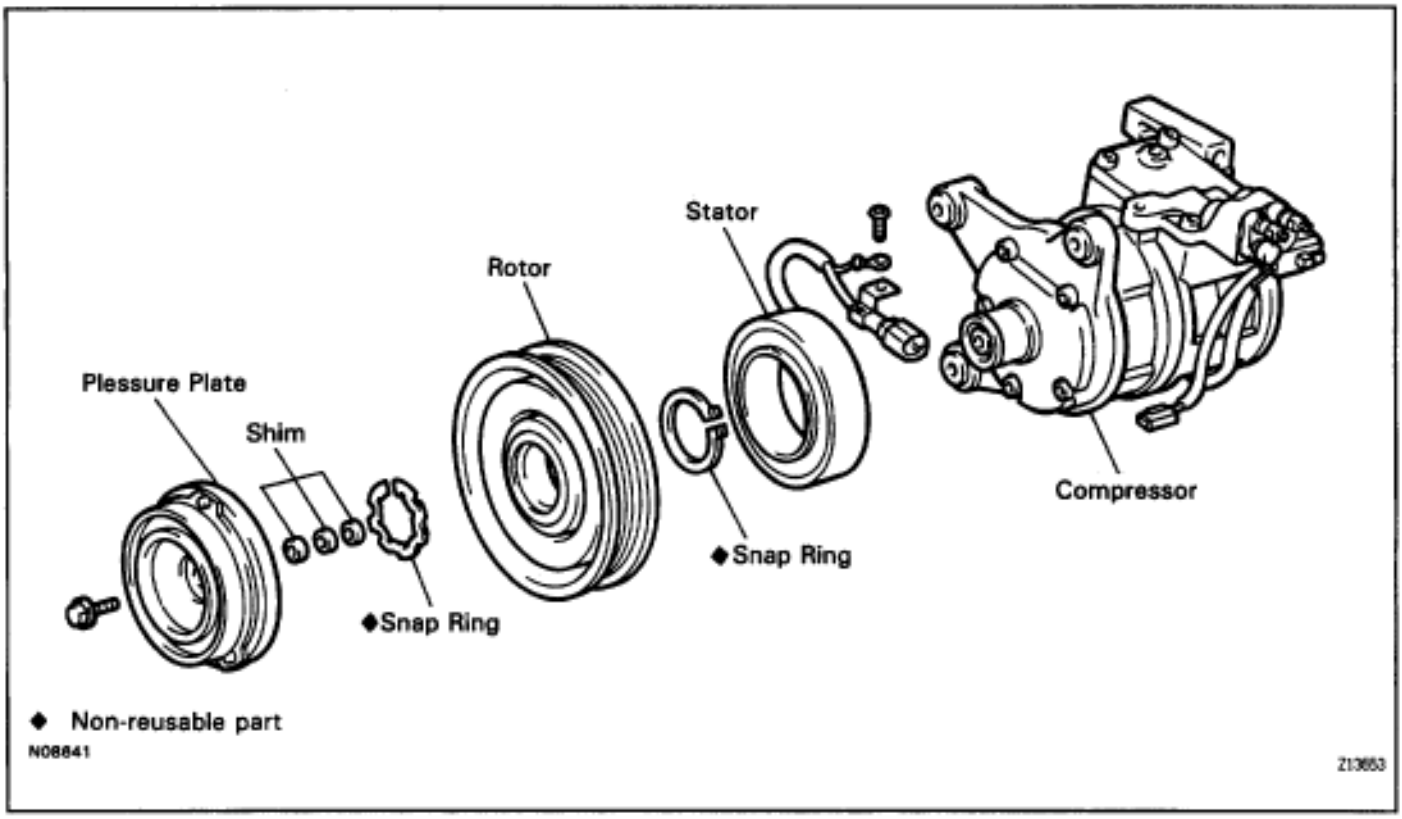

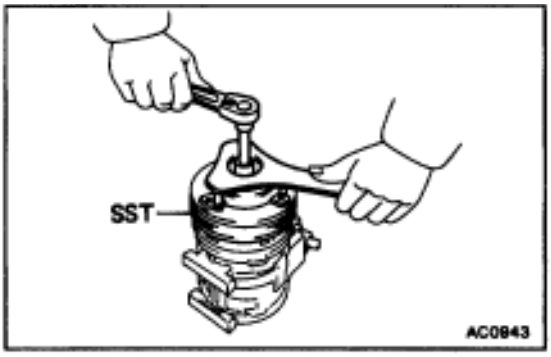

1. REMOVE PRESSURE PLATE

(a) Using SST and socket wrench, remove the shaft bolt.
SST 07112–76060
Torque: 14 N·m (140 kgf·cm, 10ft·lbf)

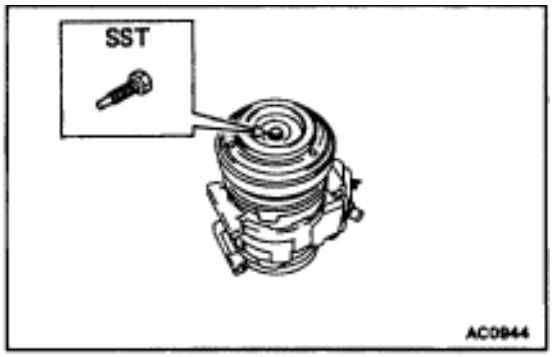

(b) Install SST on the pressure plate.
SST 07112–66040

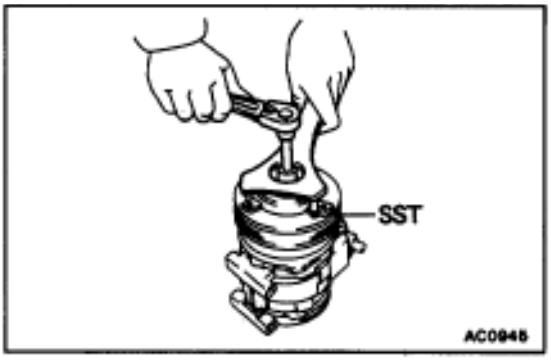

(c) Using SST and socket wrench, remove the pressure plate.
SST 07112–76060

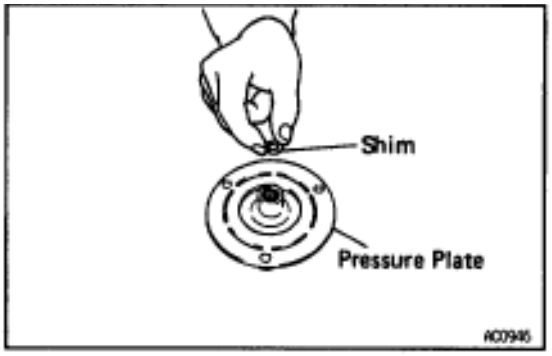

(d) Remove the shims from the pressure plate.

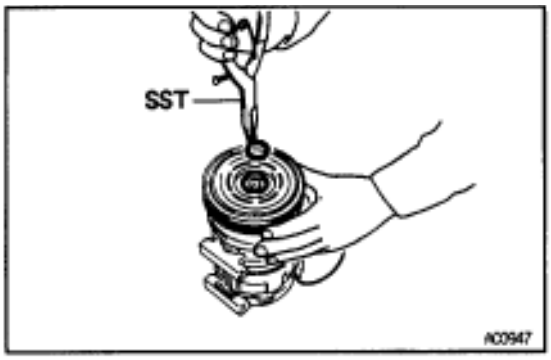

2. REMOVE ROTOR

(a) Using SST, remove the snap ring.
SST 07114–84020
ASSEMBLY CAUTION: Do not spread the point of SST too wide.
Max width:
23.1 mm

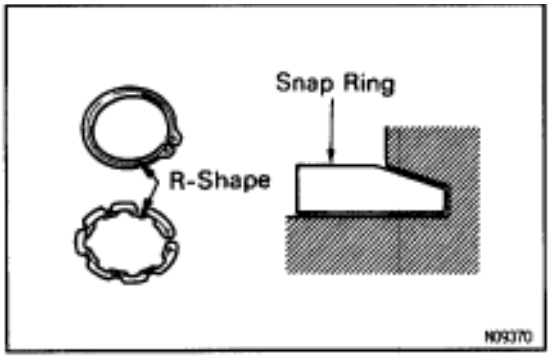

ASSEMBLY NOTICE: The snap ring should be installed so that its beveled side faces up.

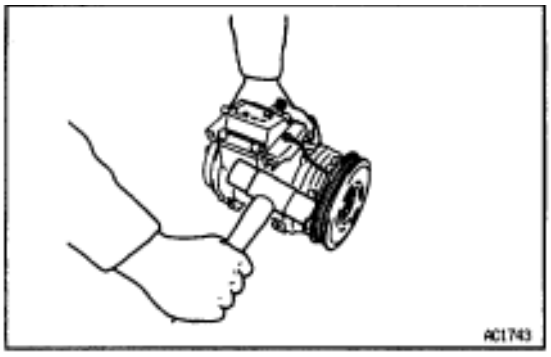

(b) Using a plastic hammer, tap the rotor off the shaft.
DISASSEMBLY NOTICE: Be careful not to damage pulley when tapping on the rotor.

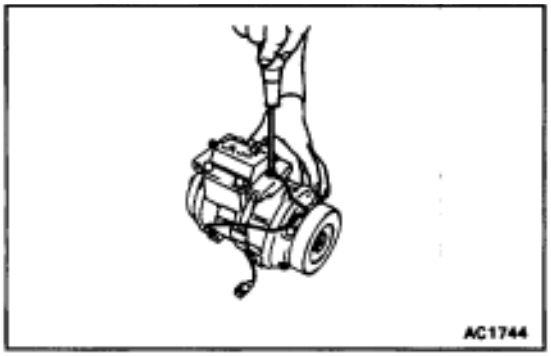

3. REMOVE STATOR

(a) Disconnect the stator lead wire from the compressor housing.

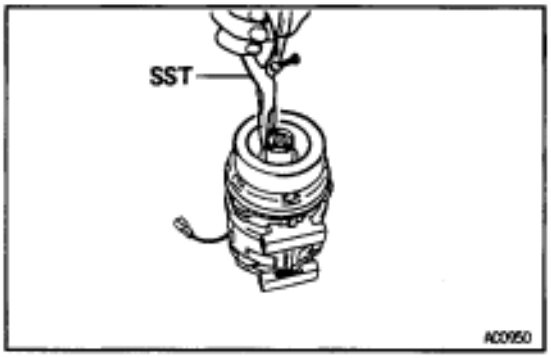

(b) Using SST, remove the snap ring.
SST 07114–84020

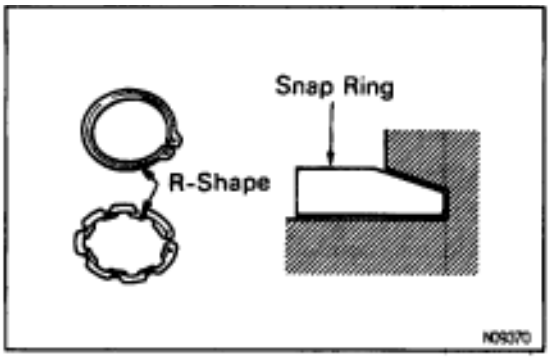

ASSEMBLY NOTICE: The snap ring should be installed so that its beveled side faces up.

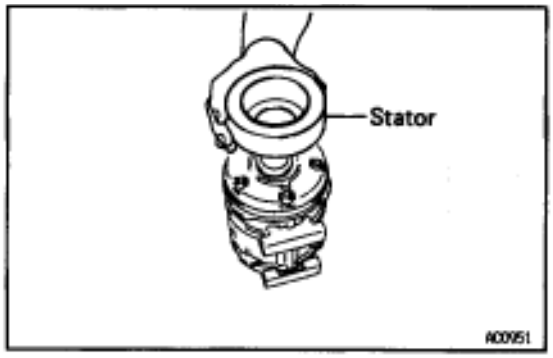

(c) Remove the stator.

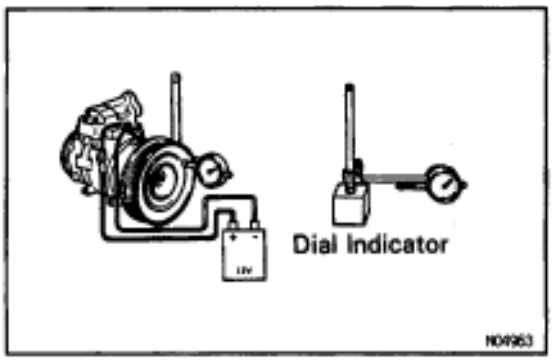

MAGNETIC CLUTCH ASSEMBLY

Assembly is in the reverse order of disassembly.

CHECK CLEARANCE OF MAGNETIC CLUTCH

(a) Set the dial–gauge to the pressure plate of the magnetic clutch.

(b) Connect the magnetic clutch lead wire to the positive (+) terminal of the battery.

(c) Check the clearance between the pressure plate and rotor, then connect the negative (–) terminal of the battery.

Standard clearance:

0.5 ± 0.15 mm (0.020 ± 0.0059 in.)

If the clearance is not within specification, adjust the clearance using shims to obtain the standard clearance.

Shim Thickness:

0.1 mm (0.004 in.)
0.3 mm (0.012 in.)
0.5 mm (0.020 in.)

COMPRESSOR INSTALLATION

1. INSTALL COMPRESSOR

(a) Install the stud bolt.
Torque: 26 N·m (265 kgf·cm, 19 ft·lbf)

(b) Install the compressor with 4 bolts and nut.
Torque: 52 N·m (530 kgf·cm, 38 ft·lbf)

(c) Connect the magnetic clutch connector.

(d) Install the engine under cover.

2. CONNECT DISCHARGE HOSE AND SUCTION HOSE TO COMPRESSOR

NOTICE: Hoses should be connected immediately after the caps have been removed.

Torque: 10 N·m (100 kgf·cm, 7 ft·lbf)

3. INSTALL POWER STEERING PUMP

Install the power steering pump with 2 bolts.
Torque: 58 N·m (590 kgf·cm, 43 ft·lbf)

4. INSTALL DRIVE BELT

5. INSTALL BATTERY

6. EVACUATE AIR IN REFRIGERATION SYSTEM AND CHARGE WITREFRIGERANT

Specified amount:

700 ± 50 g (24.96 ± 1.76 oz.)

7. INSPECT FOR LEAKAGE OF REFRIGERANT

Using a gas leak tester, check for leakage of refrigerant.
If there is leakage, check the tightening torque at the joints.

8. INSPECT A/C OPERATION

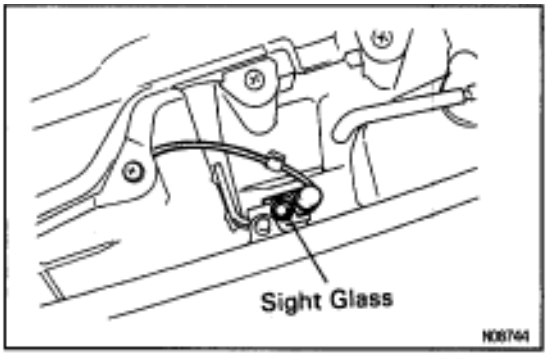

RECEIVER

ON–VEHICLE INSPECTION

1. **OPEN THE HOOD**
2. **INSPECT SIGHT GLASS AND FITTING FOR LEAKAGE**
   Using a gas leak tester, check for leakage, check for leakage. If there is leakage, check the tightening torque at the joints.

RECEIVER REMOVAL

1. **OPEN THE HOOD**
2. **DISCHARGE REFRIGERANT IN REFRIGERATION SYSTEM**
   INSTALLATION HINT: Evacuate air from refrigeration system.
   Charge system with refrigerant and inspect for leakage of refrigerant.
   Specified amount:
   700 ±50 g (24.96 ±1.76 oz.)

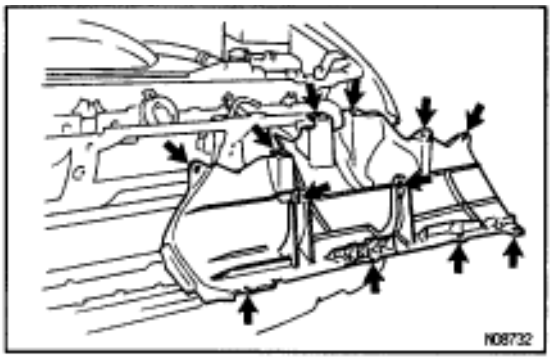

3. **REMOVE FRONT BUMPER**
   (See page BO–8)
4. **REMOVE RADIATOR SUPPORT UPPER SEAL**
   Remove the 12 clips and radiator support upper seal.
5. **REMOVE LIQUID TUBES FROM RECEIVER**
   Remove the 2 bolts and both tubes from the receiver.
   Torque: 5.4 N·m (55 kgf·cm, 48 in.·lbf
   INSTALLATION HINT: Lubricate the new O–rings with compressor oil and install the tubes.

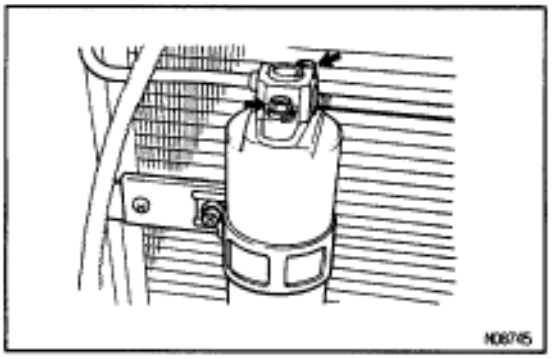

6. **REMOVE RECEIVER**
   Remove the holder bolt and pull the receiver upward from the receiver holder.
   REMOVAL NOTICE: Cap the open fitting immediately to keep moisture out of system.
   INSTALLATION HINT: If receiver was replaced, add compressor oil to the compressor.
   Add 10 cc (2.9 fl.oz.)
   Compressor oil:
   ND–OIL 8 or equivalent

RECEIVER INSTALLATION

Installation is in the reverse order of removal.

CONDENSER

ON–VEHICLE INSPECTION

1. INSPECT CONDENSER FINS FOR BLOCKAGE OR DAMAGE

If fins are clogged, wash them with water and dry with compressed air.

NOTICE: Be careful not to damage the fins.

If fins are bent, straighten them with a screwdriver or pliers.

2. INSPECT CONDENSER AND FITTING FOR LEAKAGE

Using a gas leak tester, check for leakage.

If there is leakage, check the tightening torque at the joints.

CONDENSER REMOVAL

1. DISCHARGE REFRIGERANT IN REFRIGERATION SYSTEM

INSTALLATION HINT: Evacuate air from refrigeration system.

Charge system with refrigerant and inspect for leakage of refrigerant.

Specified amount:

700 ±50g (24.96 ±1.76 oz.)

2. REMOVE BATTERY

3. REMOVE AIR CLEANER DUCT

Remove the bolt and the air cleaner duct.

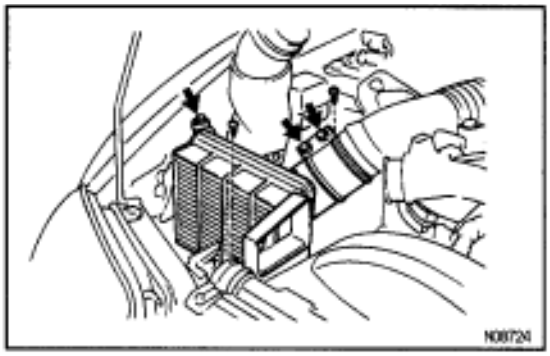

4. REMOVE AIR CLEANER

(a) Remove the air cleaner cover.

(b) Remove the air cleaner hose.

(c) 2JZ–GTE:

Remove the No. 1 air hose.

(d) Remove the 3 bolts and 2 screws.

(e) Remove the air cleaner.

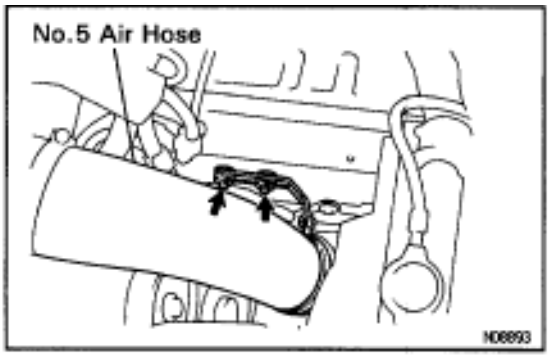

5. REMOVE NO.5 AIR HOSE CLAMP (2JZ–GTE)

(a) Remove the 2 bolts and clamp.

(b) Push the hose to engine side.

6. REMOVE FRONT BUMPER

(See page BO–88)

7. REMOVE RADIATOR SUPPORT UPPER SEAL

(See page AC–91)

8. REMOVE RECEIVER

(See page AC–91)

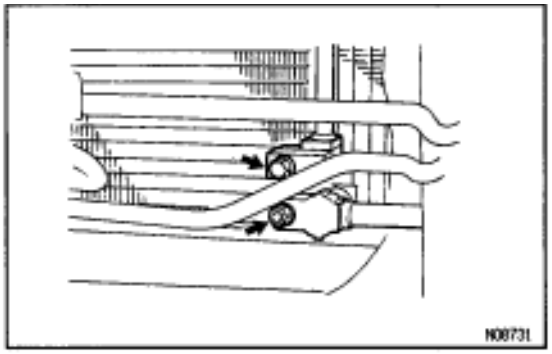

9. REMOVE LIQUID TUBE AND DISCHARGE TUBE

Torque: 10 N·m (100 kgf·cm, 7 ft·lbf)

REMOVAL NOTICE: Cap the open fittings immediately to keep moisture out of the system.

INSTALLATION HINT: Lubricate the new O–rings with compressor oil and install the tubes.

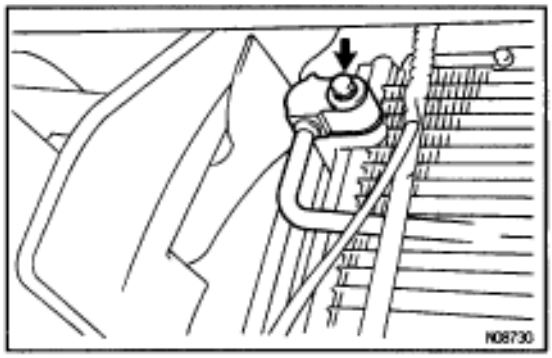

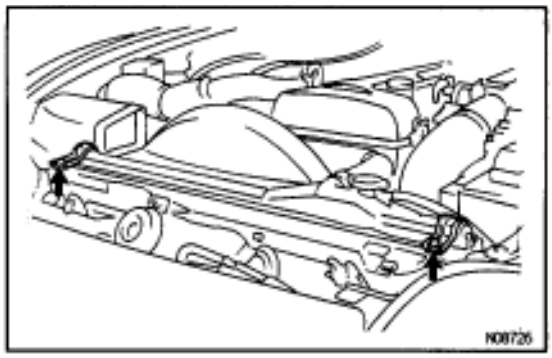

10. REMOVE CONDENSER

(a) Remove the radiator upper mounting.

(b) Push the radiator to engine side.

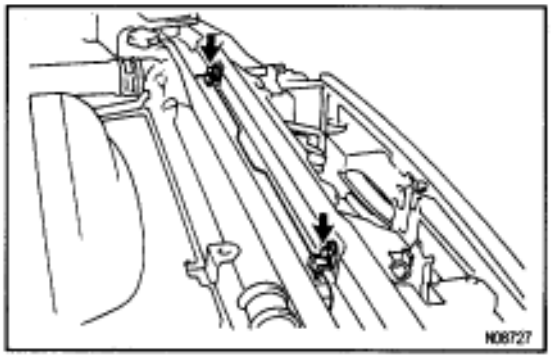

(c) Remove the condenser upper mounting.

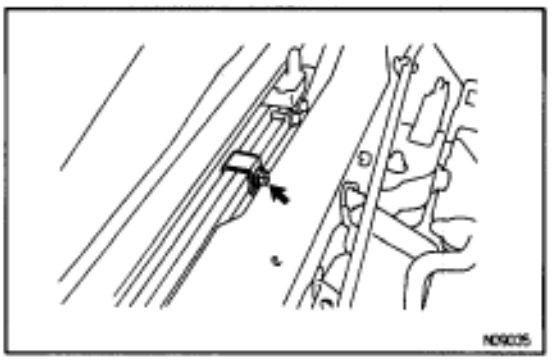

(d) Push the condenser to engine side and remove the liquid tube piping clamp.

Torque: 4.1 N·m (42 kgf·cm, 36 in.·lbf)

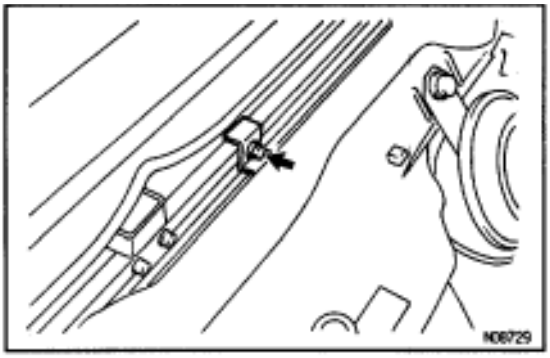

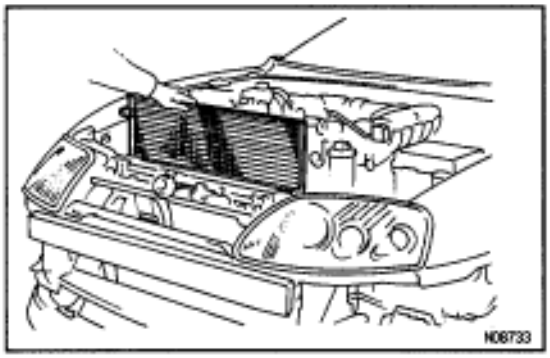

(e) Push the condenser to engine side and pull it upward.
INSTALLATION HINT: If condenser was replaced, add compressor oil to the compressor.
Add 40 cc (1.4 fl.oz.)
Compressor oil:
ND–OIL 8 or equivalent

CONDENSER INSTALLATION

Installation is in the reverse order of removal.

EVAPORATOR

EVAPORATOR REMOVAL

1. DISCHARGE REFRIGERANT IN REFRIGERATION SYSTEM

INSTALLATION HINT: Evacuate air from refrigeration system.

Charge system with refrigerant and inspect for leakage of refrigerant.

2. REMOVE ABS ACTUATOR (w/ABS)

(See page BR–44)

3. REMOVE LIQUID TUBE AND SUCTION TUBE FROM A/C UNIT

Torque: 10 N·m (100 kgf·cm, 7 ft·lbf)

INSTALLATION HINT: Lubricate the new O–rings with compressor oil and install the tubes.

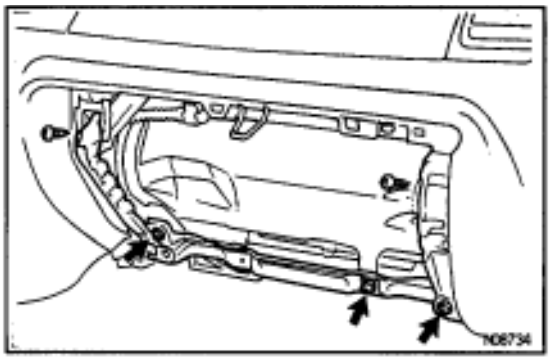

4. REMOVE GROVE BOX AND SIDE AIR DUCT

(a) Remove the glove box.

(See page BO–45)

(b) Remove the 5 screws and the brace.

(c) Remove the side air duct.

5. REMOVE SCUFF PLATE

(See page BO–44)

6. REMOVE FLOOR CARPET

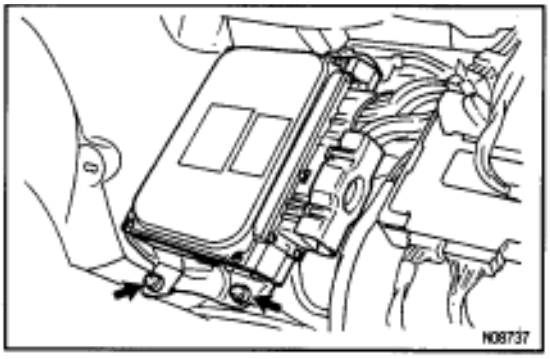

7. REMOVE ECM

(a) Remove the 2 nuts and the ECM cover.

(b) Remove the 2 nuts and the ECM.

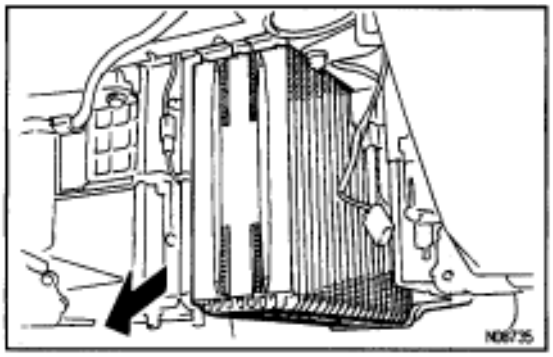

8. REMOVE EVAPORATOR

(a) Remove the 6 screws and the lower cover.

(b) Remove the 4 screws and the evaporator cover.

(c) Remove the evaporator.

INSTALLATION HINT: If evaporator was replaced, add compressor oil to the compressor.

Add 40 cc (1.4 fl.oz.)

Compressor oil

ND–OIL 8 or equivalent

EVAPORATOR INSPECTION

1. **INSPECT FINS FOR BLOCKAGE**
   If the fins are clogged, clean them with compressed air.
   NOTICE: Never use water to clean the evaporator.
2. **INSPECT FITTING FOR CRACKS OR SCRATCHES**
   Repair as necessary.

EVAPORATOR INSTALLATION

Installation is in the reverse order of removal.

HEATER RADIATOR

HEATER RADIATOR REMOVAL AND INSTALLATION

(See page AC–82)

HEATER RADIATOR INSPECTION

INSPECT FINS FOR BLOCKAGE
If the fins are clogged, clean them with compressed air.

WATER VALVE

WATER VALVE REMOVAL

1. REMOVE HEATER RADIATOR

(See page AC–82)

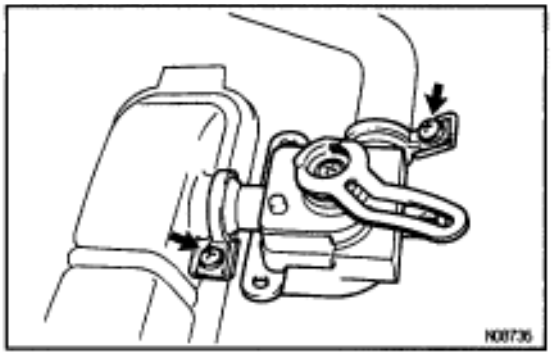

2. REMOVE WATER VALVE

(a) Remove the 2 screws.

(b) Remove the water valve from heater radiator.

WATER VALVE INSTALLATION

1. INSTALL WATER VALVE

(a) Install the water valve to heater radiator.

(b) Install the 2 screws.

2. INSTALL HEATER RADIATOR

EXPANSION VALVE

ON–VEHICLE INSPECTION

1. **CHECK QUANTITY OF GAS DURING REFRIGERATION CYCLE**
2. **INSTALL MANIFOLD GAUGE SET**
3. **RUN ENGINE**
   Run the engine at 1,500 rpm for at least 5 minutes. Then check that the high pressure reading is 1.371.57 MPa (14–16 kgf/cm^2, 199–228 psi).
4. **CHECK EXPANSION VALVE**
   If the expansion valve is faulty, the low pressure reading will drop to 0 kPa (0 kgf/cm^2, 0 psi).
   HINT: When the low pressure drops to 0 kPa (0 kgf/cm^2, 0 psi), feel the receiver's IN and OUT sides for zero temperature difference.

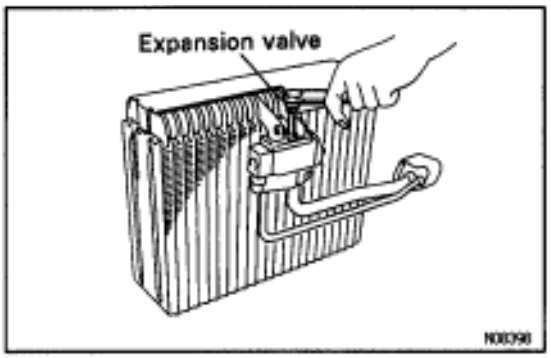

EXPANSION VALVE REMOVAL

1. **REMOVE EVAPORATOR**
   (See page AC–82)
2. **REMOVE EXPANSION VALVE**
   Using a hexagon wrench, remove the 2 bolts and separate the evaporator and expansion valve.
   Torque: 5.4 N·m (55 kgf·cm, 48 in.·lbf)
   INSTALLATION HINT: Lubricate the new O–ring with compressor oil and install the tubes.

EXPANSION VALVE INSTALLATION

Installation is in the reverse order of removal.

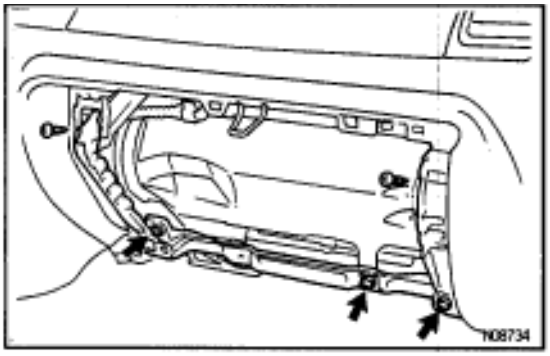

BLOWER MOTOR

BLOWER MOTOR REMOVAL

1. REMOVE GLOVE BOX AND SIDE AIR DUCT

(a) Remove the glove box.
(See page **BO–45**)

(b) Remove the 5 bolts and the brace.

(c) Remove the side air duct.

2. REMOVE SCUFF PLATE
(See page BO–44)

3. REMOVE FLOOR CARPET

4. REMOVE ECM COVER

Remove the 2 nuts and the ECM cover.

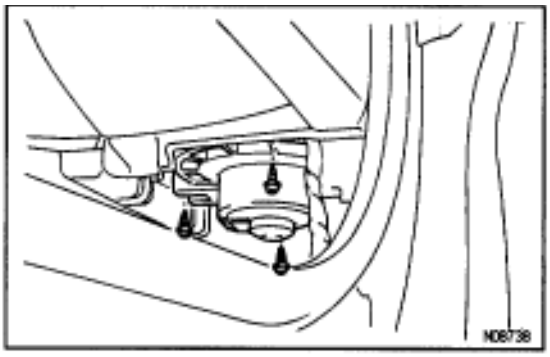

5. REMOVE BLOWER MOTOR

(a) Disconnect the connector.

(b) Remove the 3 screws and the blower motor.

BLOWER MOTOR INSPECTION

(See page AC–61)

BLOWER MOTOR INSTALLATION

Installation is in the reverse order of removal.

BLOWER MOTOR CONTROL RELAY

BLOWER MOTOR CONTROL RELAY REMOVAL

1. REMOVE BLOWER MOTOR
(See page AC–82)

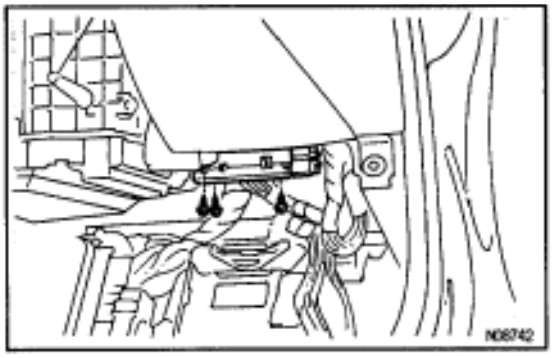

2. REMOVE BLOWER MOTOR CONTROL RELAY

(a) Disconnect the connector.

(b) Remove the 3 screws and the blower motor control relay.

BLOWER MOTOR CONTROL RELAY INSPECTION

(See page AC–61)

BLOWER MOTOR CONTROL RELAY INSTALLATION

Installation is in the reverse order of removal.

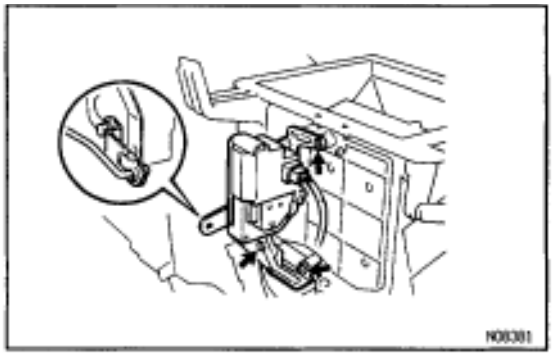

SERVOMOTOR

AIR INLET SERVOMOTOR REMOVAL

1. REMOVE INSTRUMENT PANEL
(See page BO–45)

2. REMOVE AIR INLET SERVOMOTOR

(a) Disconnect the connector.
(b) Disconnect the control link.
(c) Remove the 3 screws and the air inlet servomotor.

AIR INLET SERVOMOTOR INSPECTION

(See page AC–47)

AIR INLET SERVOMOTOR INSTALLATION

Installation is in the reverse order of removal.

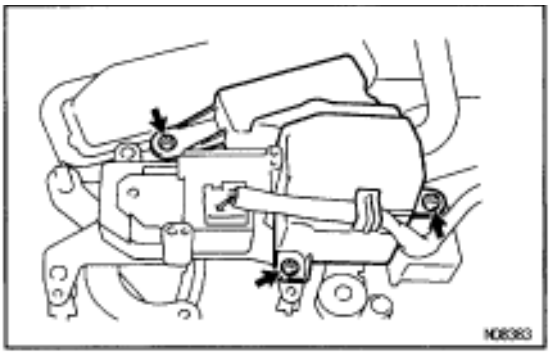

AIR MIX SERVOMOTOR REMOVAL

1. REMOVE INSTRUMENT PANEL
(See page BO–45)

2. REMOVE AIR MIX SERVOMOTOR

(a) Remove the defroster duct.
(b) Remove the 3 screws and the water valve cover.
(c) Disconnect the connector.

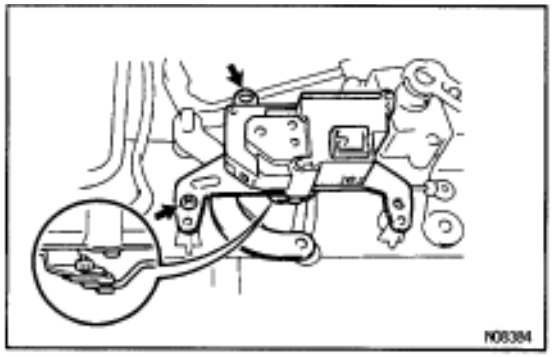

(d) Disconnect the control link.
(e) Remove the 2 screws and the air mix servomotor.

AIR MIX SERVOMOTOR INSPECTION

(See page AC–47)

AIR MIX SERVOMOTOR INSTALLATION

Installation is in the reverse order of removal.

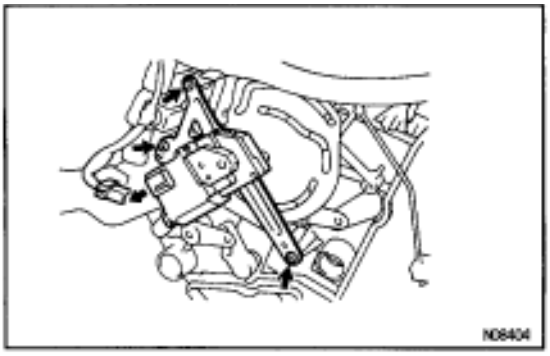

AIR OUTLET SERVOMOTOR REMOVAL

1. REMOVE INSTRUMENT PANEL

(See page BO–45)

2. REMOVE AIR OUTLET SERVOMOTOR

(a) Disconnect the connector.

(b) Remove the 3 screws and the air outlet servomotor.

AIR OUTLET SERVOMOTOR INSPECTION

(See page AC–51)

AIR OUTLET SERVOMOTOR INSTALLATION

Installation is in the reverse order of removal.

PRESSURE SWITCH

PRESSURE SWITCH REMOVAL

1. DISCHARGE REFRIGERANT IN REFRIGERATION SYSTEM

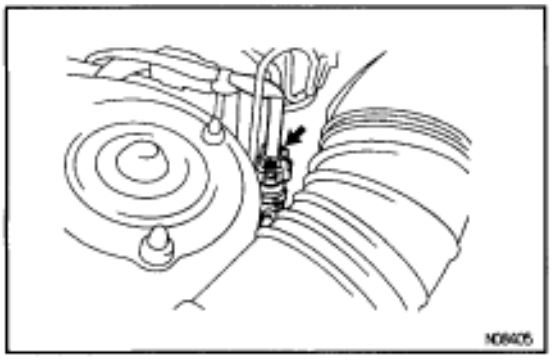

2. REMOVE PRESSURE SWITCH

(a) Disconnect the connector.

(b) Remove the pressure switch from the liquid tube.

HINT: Lock the pressure switch mount on the tube with an open end wrench, being careful not to deform the tube, and remove the switch.

PRESSURE SWITCH INSPECTION

(See page AC–41)

PRESSURE SWITCH INSTALLATION

1. INSTALL PRESSURE SWITCH

(a) Install the pressure switch to the liquid tube.

Torque: 10 N·m (100 kgf·cm, 7 ft·lbf)

HINT: Lock the switch mount on the tube with an open end wrench, being careful not to deform the tube, and install the switch.

(b) Connect the connector.

2. EVACUATE AIR IN REFRIGERATION SYSTEM AND CHARGE WITH REFRIGERANT

Specified amount:

700 ± 50 g (24.96 ± 1.76 oz.)

3. INSPECTION FOR LEAKAGE OF REFRIGERANT

Using a gas leak tester, check for leakage of refrigerant from the pressure switch.

4. INSPECT A/C OPERATION

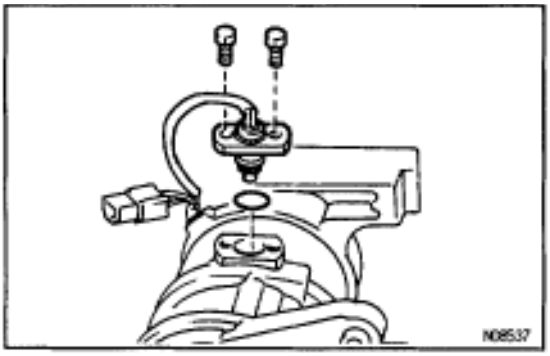

SENSOR

REVOLUTION DETECTING SENSOR REMOVAL

1. **REMOVE COMPRESSOR**
   (See page AC–86)
2. **REMOVE REVOLUTION DETECTING SENSOR**
   Remove the 2 bolts and the revolution detecting sensor.
   Torque: 6.0 N·m (60 kgf·cm, 52 in.·lbf)

REVOLUTION DETECTING SENSOR INSPECTION

(See page AC–39)

REVOLUTION DETECTING SENSOR INSTALLATION

Installation is in the reverse order of removal.

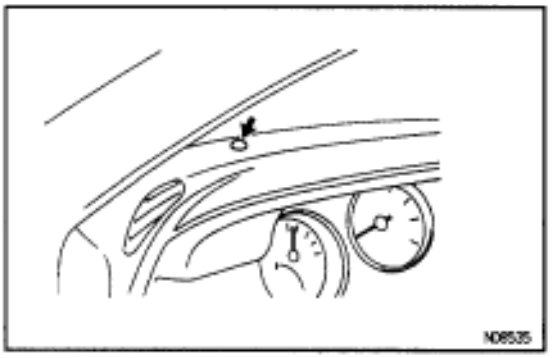

SOLAR SENSOR REMOVAL

1. **REMOVE INSTRUMENT PANEL**
   (See page BO–45)
2. **REMOVE SOLAR SENSOR**
   Disconnect the harness and pull the solar sensor upward from instrument panel.

SOLAR SENSOR INSPECTION

(See page AC–36)

SOLAR SENSOR INSTALLATION

Installation is in the reverse order of removal.

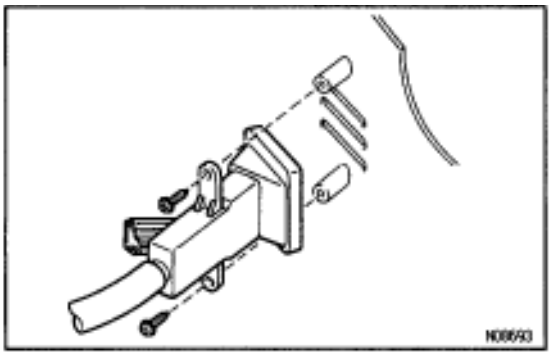

ROOM TEMPERATURE SENSOR REMOVAL

1. **REMOVE CENTER CLUSTER PANEL**
   (See page BO–45)
2. **REMOVE ROOM TEMPERATURE SENSOR**

(a) Disconnect the connector.
(b) Remove the aspirator hose.
(c) Remove the 2 screws and the room temperature sensor.

ROOM TEMPERATURE SENSOR INSPECTION

(See page AC–28)

ROOM TEMPERATURE SENSOR INSTALLATION

Installation is in the reverse of removal.

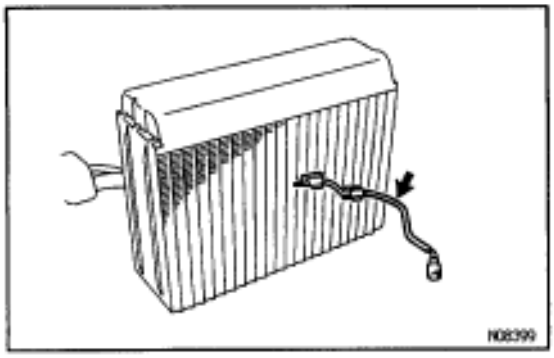

EVAPORATOR TEMPERATURE SENSOR REMOVAL

1. **REMOVE EVAPORATOR**
   (See page AC–82)
2. **REMOVE EVAPORATOR TEMPERATURE SENSOR**
   Pull out the evaporator temperature sensor from the evaporator.

EVAPORATOR TEMPERATURE SENSOR INSPECTION

(See page AC–32)

EVAPORATOR TEMPERATURE SENSOR INSTALLATION

Installation is in the reverse order of removal.

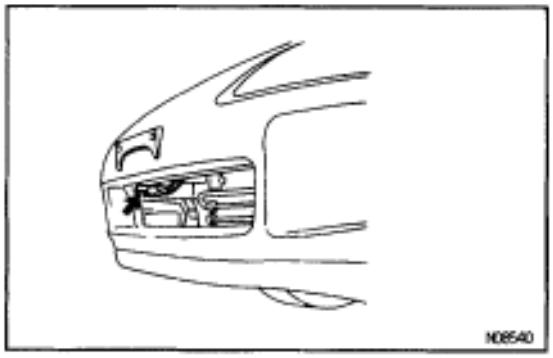

AMBIENT TEMPERATURE SENSOR REMOVAL

REMOVE AMBIENT TEMPERATURE SENSOR

(a) Remove the ambient temperature sensor from the bumper reinforcement.
(b) Disconnect the connector.

AMBIENT TEMPERATURE SENSOR INSPECTION

(See page AC–30)

AMBIENT TEMPERATURE SENSOR INSTALLATION

Installation is in the reverse order of removal.

ENGINE COOLANT TEMPERATURE SENSOR REMOVAL

1. REMOVE AIR CONDITIONING UNIT
(See page AC–80)

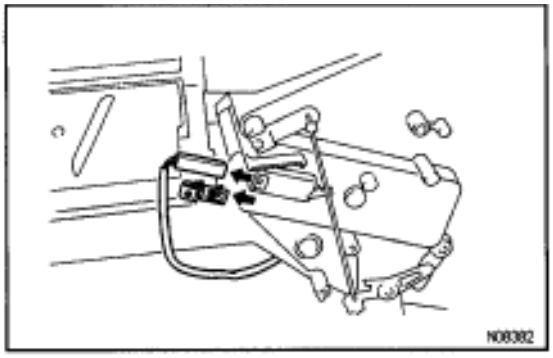

2. REMOVE ENGINE COOLANT TEMPERATURE SENSOR
(a) Disconnect the connector.
(b) After pulling off the clamp, pull out the sensor.

ENGINE COOLANT TEMPERATURE SENSOR INSPECTION

(See page AC–34)

ENGINE COOLANT TEMPERATURE SENSOR INSTALLATION

Installation is in the reverse order of removal.

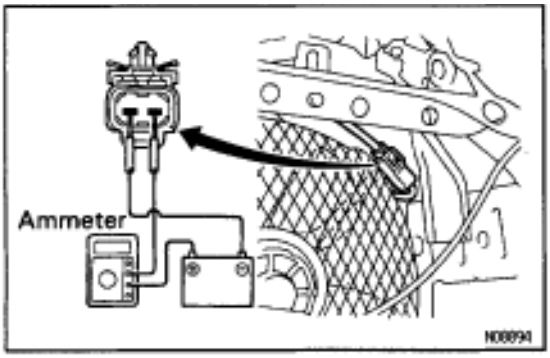

ELECTRIC COOLING FAN

ON–VEHICLE INSPECTION

Condenser Fan:

1. INSPECT CONDENCER

(a) Disconnect the fan connector.

(b) Connect battery and ammeter to the cooling fan connector.

(c) Check that the condenser fan rotates smoothly, and check the reading on the ammeter.

Standard amperage:

6.0–7.4 A

(d) Reconect the fan connector.

2. CONNECT NEGATIVE (–) TERMINAL CABLE TO BATTERY

Radiator Fan:

(See page EG–353)

COOLING FAN RELAYS INSPECTION

(See page EG–356)

ECT SWITCH

(in ENGINE RADIATOR)

(See page EG–356)

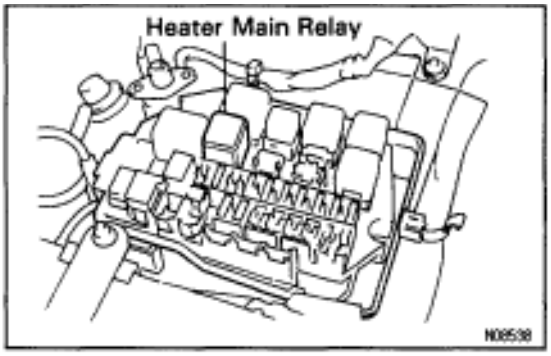

RELAY

HEATER MAIN RELAY

HEATER MAIN RELAY REMOVAL

1. **REMOVE JUNCTION BLOCK NO. 2 COVER**
   Remove the 2 clips and the junction block No. 2 cover.
2. **REMOVE HEATER MAIN RELAY**

HEATER MAIN RELAY INSPECTION

(See page AC–59)

HEATER MAIN RELAY INSTALLATION

Installation is in the reverse order of removal.

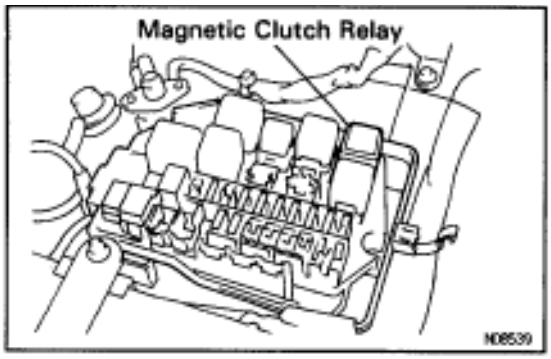

MAGNETIC CLUTCH RELAY

MAGNETIC CLUTCH RELAY REMOVAL

1. **REMOVE JUNCTION BLOCK NO. 2 COVER**
   Remove the 2 clips and the junction block No. 2 cover.
2. **REMOVE MAGNETIC CLUTCH RELAY**

MAGNETIC CLUTCH RELAY INSPECTION

(See page AC–65)

MAGNETIC CLUTCH RELAY INSTALLATION

Installation is in the reverse order of removal.

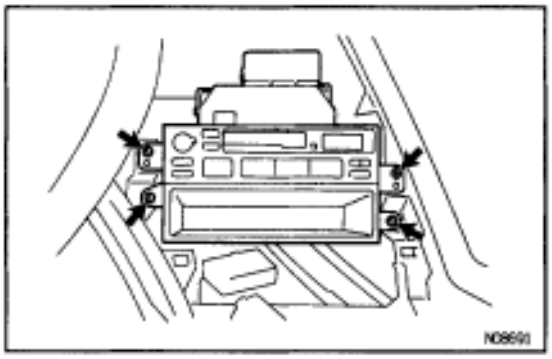

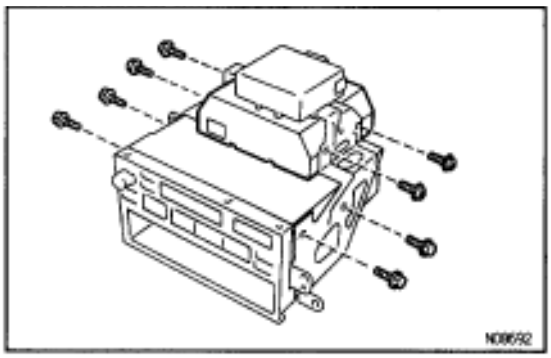

AIR CONDITIONING AMPLIFIER

AIR CONDITIONING AMPLIFIER REMOVAL

1. REMOVE CENTER CLUSTER PANEL
(See page BO–45)

2. REMOVE RADIO WITH AIR CONDITIONING AMPLIFIER

(a) Remove the 4 screws and radio with the air conditioning amplifier.

(b) Disconnect the connectors.

3. REMOVE AIR CONDITIONING AMPLIFIER FROM RADIO

(a) Remove the 4 screws and the 4 bolts.

(b) Remove the air conditioning amplifier from radio.

AIR CONDITIONING AMPLIFIER INSPECTION

(See page AC–23)

AIR CONDITIONING AMPLIFIER INSTALLATION

Installation is in the reverse order of removal.

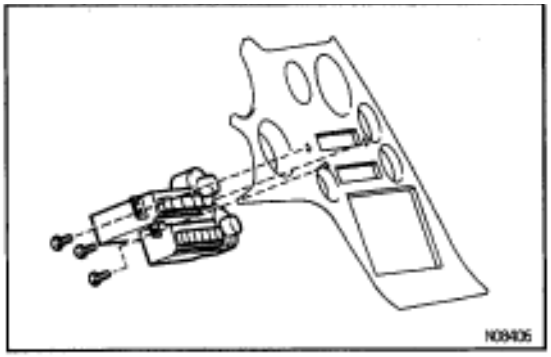

AIR CONDITIONING CONTROL ASSEMBLY

AIR CONDITIONING CONTROL ASSEMBLY REMOVAL

1. **REMOVE CENTER CLUSTER PANEL**
   (See page BO–45)
2. **REMOVE AIR CONDITIONING CONTROL ASSEMBLY**

(a) Disconnect the connector.

(b) Remove the 3 screws and the air conditioning control assembly.

AIR CONDITIONING CONTROL ASSEMBLY INSPECTION

(See page AC–66)

AIR CONDITIONING CONTROL ASSEMBLY INSTALLATION

Installation is in the reverse order of removal.

SERVICE SPECIFICATIONS

SERVICE DATA

Refrigerant charge volume	700 ± 50g. 24.96 ± 1.76 oz.
Idle speed	
2JZ–GE (M/T)	
Magnetic clutch not engaged	Approx. 700 rpm
Magnetic clutch engaged	Approx. 900 rpm
2JZ–GE (A/T)	
Magnetic clutch not engaged	Approx. 700 rpm
Magnetic clutch engaged	Approx. 800 rpm
2JZ–GTE	
Magnetic clutch not engaged	Approx. 650 rpm
Magnetic clutch engaged	Approx. 800 rpm

TORQUE SPECIFICATIONS

Part tightened		N·m	kgf·cm	ft·lbf
Suction hose x Compressor		10	100	7
Discharge hose x Compressor		10	100	7
Compressor x Engine	Stud bolt	26	265	19.2
	Other bolts and nut	52	530	38.3
Liquid tube x Receiver		5.4	55	48 in.·lbf
Liquid tube x Condenser		10	100	7
Discharge tube x Condenser		10	100	7
Expansion valve x Evaporator		5.4	55	48 in.·lbf
Suction tube x A/C unit		10	100	7
Liquid tube x A/C unit		10	100	7
Pressure switch x Liquired tube		10	100	7
Revolution detecting sensor x Compressor		6.0	60	52 in.·lbf
Condenser upper mounting x Body		4.1	42	36 in.·lbf
Liquid lines		10	100	7
Discharge lines		10	100	7
Suction lines		10	100	7

HOW TO USE THIS MANUAL

IN002-0T

To assist you in finding your way through the manual, the Section Title and major heading are given at the top of every page.

PREPARATION

Preparation lists the SST (Special Service Tools), recommended tools, equipment, lubricant and SSM (Special Service Materials) which should be prepared before beginning the operation and explains the purpose of each one.

REPAIR PROCEDURES

Most repair operations begin with an overview illustration. It identifies the components and shows how the parts fit together.

Example:

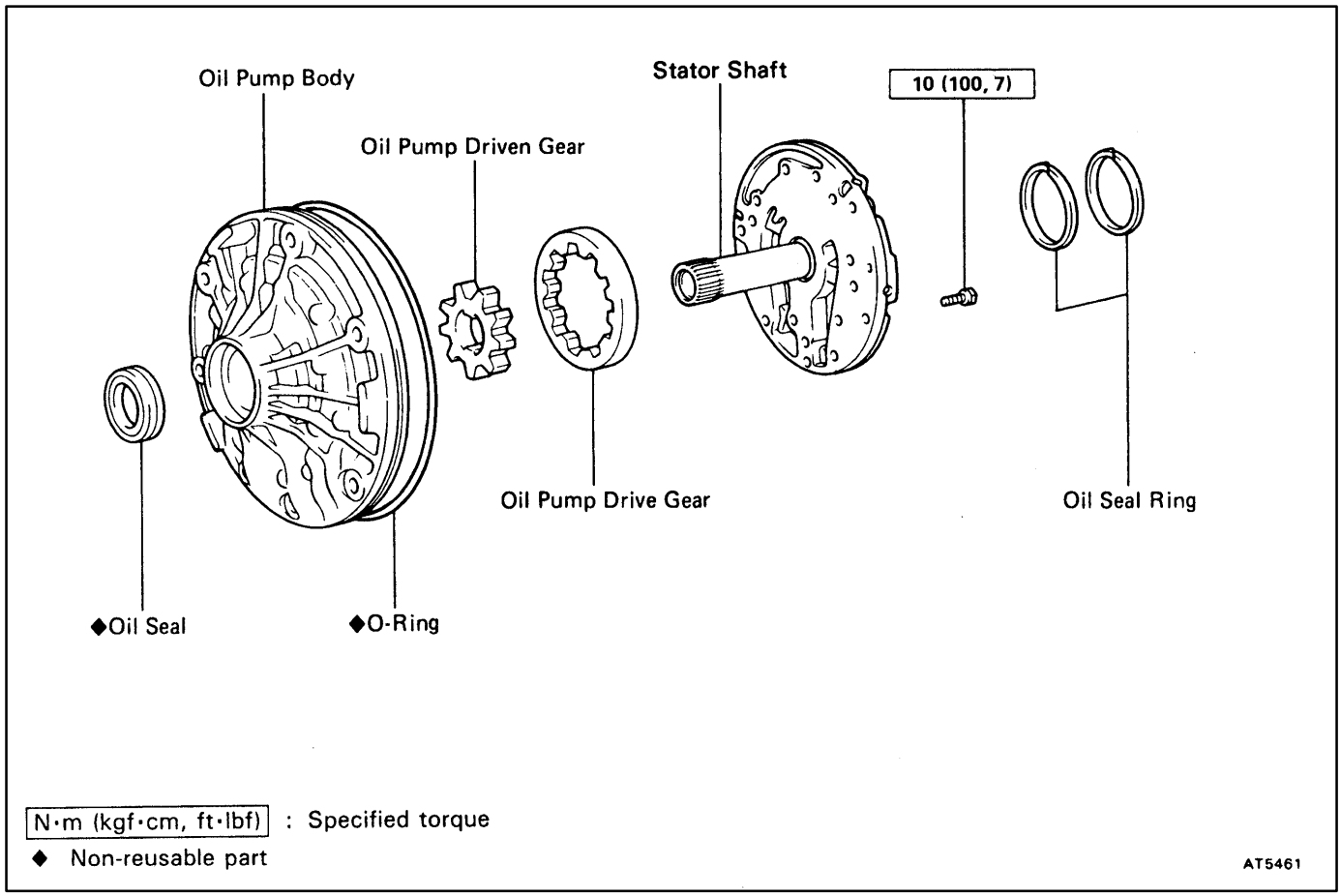

The procedures are presented in a step-by-step format:

★ The illustration shows what to do and where to do it.
★ The task heading tells what to do.
★ The detailed text tells how to perform the task and gives other information such as specifications and warnings.

Example:

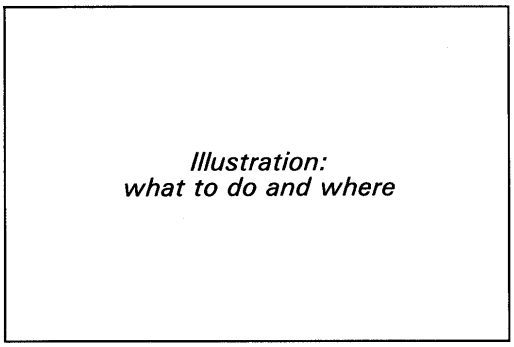

Task heading : what to do

21. CHECK PISTON STROKE OF OVERDRIVE BRAKE

(a) Place SST and a dial indicator onto the overdrive brake piston as shown in the illustration.

SST 09350-30020 (09350-06120)

Set part No. *Component part No.*

Detailed text: how to do task

(b) Measure the stroke applying and releasing the compressed air (392 — 785 kPa, 4 — 8 kgf/cm² or 57 — 114 psi) as shown in the illustration.

Piston stroke: 1.40 — 1.70 mm (0.0551 — 0.0669 in.)

Specification

V00081

This format provides the experienced technician with a FAST TRACK to the information needed. The upper case task heading can be read at a glance when necessary, and the text below it provides detailed information. Important specifications and warnings always stand out in bold type.

REFERENCES

References have been kept to a minimum. However, when they are required you are given the page to refer to.

SPECIFICATIONS

Specifications are presented in bold type throughout the text where needed.You never have to leave the procedure to look up your specifications. They are also found at the back of AT section, for quick reference.

CAUTIONS, NOTICES, HINTS:

- ★ CAUTIONS are presented in bold type, and indicate there is a possibility of injury to you or other people.
- ★ NOTICES are also presented in bold type, and indicate the possibility of damage to the components being repaired.
- ★ HINTS are separated from the text but do not appear in bold. They provide additional information to help you perform the repair efficiently.

SI UNIT

The UNITS given in this manual are primarily expressed according to the SI UNIT (International System of Unit), and alternately expressed in the metric system and in the English system.

Example:

Torque: 30 N·m (310 kgf·cm, 22 ft·lbf)

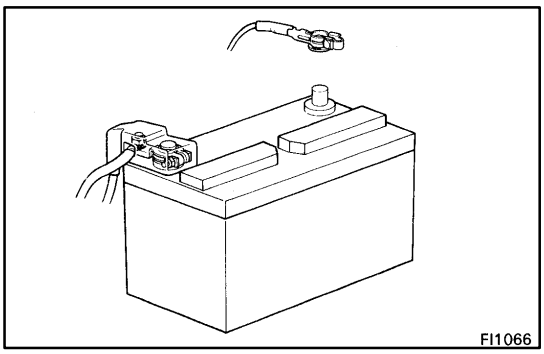
FI1066

GENERAL REPAIR INSTRUCTIONS

IN022-02

1. Use fender, seat and floor covers to keep the vehicle clean and prevent damage.
2. During disassembly, keep parts in the appropriate order to facilitate reassembly.
3. Observe the following:
   (a) Before performing electrical work, disconnect the negative cable from the battery terminal.
   (b) If it is necessary to disconnect the battery for inspection or repair, always disconnect the cable from the negative (-) terminal which is grounded to the vehicle body.
   (c) To prevent damage to the battery terminal post, loosen the terminal nut and raise the cable straight up without twisting or prying it.
   (d) Clean the battery terminal posts and cable terminals with a clean shop rag. Do not scrape them with a file or other abrasive objects.
   (e) Install the cable terminal to the battery post with the nut loose, and tighten the nut after installation. Do not use a hammer to tap the terminal onto the post.
   (f) Be sure the cover for the positive (+) terminal is properly in place.
4. Check hose and wiring connectors to make sure that they are secure and correct.
5. Non-reusable parts
   (a) Always replace cotter pins, gaskets, O-rings and oil seals etc. with new ones.
   (b) Non-reusable parts are indicated in the component illustrations by the "◆" symbol.

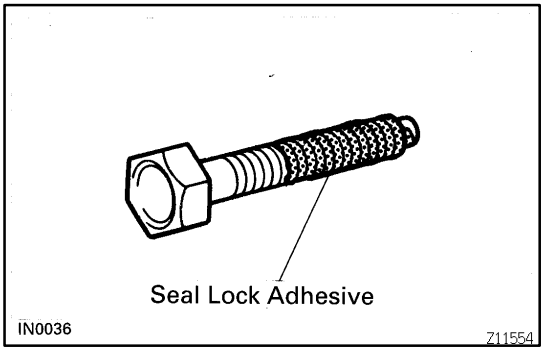

IN0036
Z11554

6. Precoated parts
   Precoated parts are bolts and nuts, etc. that are coated with a seal lock adhesive at the factory.
   (a) If a precoated part is retightened, loosened or caused to move in any way, it must be recoated with the specified adhesive.
   (b) When reusing precoated parts, clean off the old adhesive and dry with compressed air. Then apply

the specified seal lock adhesive to the bolt, nut or threads.

(c) Precoated parts are indicated in the component illustrations by the "★" symbol.

7. When necessary, use a sealer on gaskets to prevent leaks.
8. Carefully observe all specifications for bolt tightening torques. Always use a torque wrench.
9. Use of special service tools (SST) and special service materials (SSM) may be required, depending on the nature of the repair. Be sure to use SST and SSM where specified and follow the proper work procedure. A list of SST and SSM can be found at the preparation of AT section.

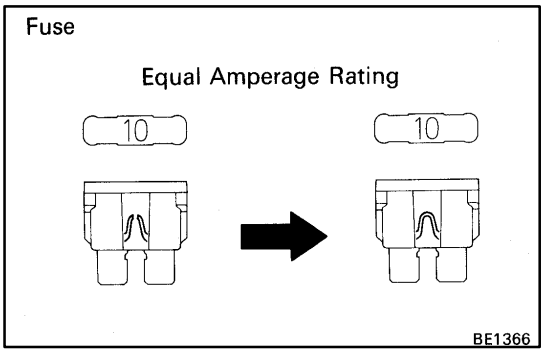

10. When replacing fuses, be sure the new fuse has the correct amperage rating. DO NOT exceed the rating or use one with a lower rating.

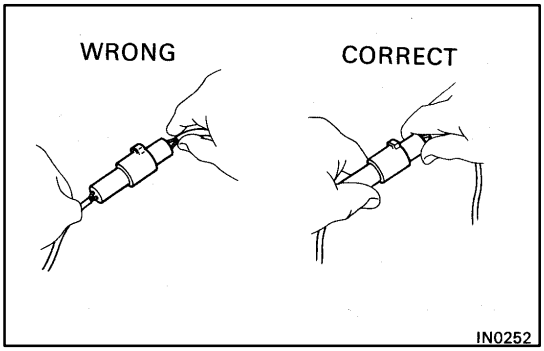

11. To pull apart electrical connectors, pull on the connector itself, not the wires.
12. Care must be taken when jacking up and supporting the vehicle. Be sure to lift and support the vehicle at the proper locations.
    (a) If the vehicle is to be jacked up only at the front or rear end, be sure to block the wheels at the opposite end in order to ensure safety.
    (b) After the vehicle is jacked up, be sure to support it on stands. It is extremely dangerous to do any work on a vehicle raised on a jack alone, even for a small job that can be finished quickly.

ABBREVIATIONS USED IN THIS MANUAL

IN01H-0K

A/T ATM	Automatic Transmission
ATF	Automatic Transmission Fluid
B_0	Overdrive Brake
B_1	Second Coast Brake
B_2	Second Brake
B_3	First and Reverse Brake
C_0	Overdrive Direct Clutch
C_1	Forward Clutch
C_2	Direct Clutch
D	Disc
F	Flange
F_0	Overdrive One-way Clutch
F_1	No.1 One-way Clutch
F_2	No.2 One-way Clutch
FIPG	Formed in Place Gasket
MP	Multipurpose
O/D	Overdrive
P	Plate
SSM	Special Service Materials
SST	Special Service Tools
w/	with
w/o	without

GLOSSARY OF SAE AND TOYOTA TERMS

IN016-02

This glossary lists all SAE-J1930 terms and abbreviations used in this manual in compliance with SAE recommendations, as well as their Toyota equivalents.

SAE ABBREVIATIONS	SAE TERMS	TOYOTA TERMS ( )--ABBREVIATIONS
A/C	Air Conditioning	Air Conditioner
ACL	Air Cleaner	Air Cleaner
AIR	Secondary Air Injection	Air Injection (AI)
AP	Accelerator Pedal	-
B+	Battery Positive Voltage	+B, Battery Voltage
BARO	Barometric Pressure	-
CAC	Charge Air Cooler	Intercooler
CARB	Carburetor	Carburetor
CFI	Continuous Fuel Injection	-
CKP	Crankshaft Position	Crank Angle
CL	Closed Loop	Closed Loop
CMP	Camshaft Position	Cam Angle
CPP	Clutch Pedal Position	-
CTOX	Continuous Trap Oxidizer	-
CTP	Closed Throttle Position	-
DFI	Direct Fuel Injection (Diesel)	Direct Injection (DI)
DI	Distributor Ignition	-
DLC1 DLC2 DLC3	Data Link Connector 1 Data Link Connector 2 Data Link Connector 3	1: Check Connector 2: Toyota Diagnosis Communication Link (TDCL) 3: OBD II Diagnostic Connector
DTC	Diagnostic Trouble Code	Diagnostic Code
DTM	Diagnostic Test Mode	-
ECL	Engine Control Level	-
ECM	Engine Control Module	Engine ECU (Electronic Control Unit)
ECT	Engine Coolant Temperature	Coolant Temperature, Water Temperature (THW)
EEPROM	Electrically Erasable Programmable Read Only Memory	Electrically Erasable Programmable Read Only Memory (EEPROM), Erasable Programmable Read Only Memory (EPROM)
EFE	Early Fuel Evaporation	Cold Mixture Heater (CMH), Heat Control Valve (HCV)
EGR	Exhaust Gas Recirculation	Exhaust Gas Recirculation (EGR)
EI	Electronic Ignition	Toyota Distributorless Ignition (TDI)
EM	Engine Modification	Engine Modification (EM)
EPROM	Erasable Programmable Read Only Memory	Programmable Read Only Memory (PROM)
EVAP	Evaporative Emission	Evaporative Emission Control (EVAP)
FC	Fan Control	-
FEEPROM	Flash Electrically Erasable Programmable Read Only Memory	-
FEPROM	Flash Erasable Programmable Read Only Memory	-
FF	Flexible Fuel	-
FP	Fuel Pump	Fuel Pump
GEN	Generator	Alternator
GND	Ground	Ground (GND)
HO2S	Heated Oxygen Sensor	Heated Oxygen Sensor (HO2S)

IAC	Idle Air Control	Idle Speed Control (ISC)
IAT	Intake Air Temperature	Intake or Inlet Air Temperature
ICM	Ignition Control Module	-
IFI	Indirect Fuel Injection	Indirect Injection
IFS	Inertia Fuel-Shutoff	-
ISC	Idle Speed Control	-
KS	Knock Sensor	Knock Sensor
MAF	Mass Air Flow	Air Flow Meter
MAP	Manifold Absolute Pressure	Manifold Pressure Intake Vacuum
MC	Mixture Control	Electric Bleed Air Control Valve (EBCV) Mixture Control Valve (MCV) Electric Air Control Valve (EACV)
MDP	Manifold Differential Pressure	-
MFI	Multiport Fuel Injection	Electronic Fuel Injection (EFI)
MIL	Malfunction Indicator Lamp	Check Engine Light
MST	Manifold Surface Temperature	-
MVZ	Manifold Vacuum Zone	-
NVRAM	Non-Volatile Random Access Memory	-
O2S	Oxygen Sensor	Oxygen Sensor, O_2 Sensor (O_2S)
OBD	On-Board Diagnostic	On-Board Diagnostic (OBD)
OC	Oxidation Catalytic Converter	Oxidation Catalyst Converter (OC), CCo
OP	Open Loop	Open Loop
PAIR	Pulsed Secondary Air Injection	Air Suction (AS)
PCM	Powertrain Control Module	-
PNP	Park/Neutral Position	-
PROM	Programmable Read Only Memory	-
PSP	Power Steering Pressure	-
PTOX	Periodic Trap Oxidizer	Diesel Particulate Filter (DPF) Diesel Particulate Trap (DPT)
RAM	Random Access Memory	Random Access Memory (RAM)
RM	Relay Module	-
ROM	Read Only Memory	Read Only Memory (ROM)
RPM	Engine Speed	Engine Speed
SC	Supercharger	Supercharger
SCB	Supercharger Bypass	-
SFI	Sequential Multiport Fuel Injection	Electronic Fuel Injection (EFI), Sequential Injection
SPL	Smoke Puff Limiter	-
SRI	Service Reminder Indicator	-
SRT	System Readiness Test	-
ST	Scan Tool	-
TB	Throttle Body	Throttle Body
TBI	Throttle Body Fuel Injection	Single Point Injection Central Fuel Injection (Ci)
TC	Turbocharger	Turbocharger
TCC	Torque Converter Clutch	Torque Converter
TCM	Transmission Control Module	Transmission ECU (Electronic Control Unit)
TP	Throttle Position	Throttle Position
TR	Transmission Range	-

TVV	Thermal Vacuum Valve	Bimetallic Vacuum Switching Valve (BVSV) Thermostatic Vacuum Switching Valve (TVSV)
TWC	Three-Way Catalytic Converter	Three-Way Catalyst (TWC) CC_{RO}
TWC+OC	Three-Way + Oxidation Catalytic Converter	CC_R + CCo
VAF	Volume Air Flow	Air Flow Meter
VR	Voltage Regulator	Voltage Regulator
VSS	Vehicle Speed Sensor	Vehicle Speed Sensor (Read Switch Type)
WOT	Wide Open Throttle	Full Throttle
WU-OC	Warm Up Oxidation Catalytic Converter	-
WU-TWC	Warm Up Three-Way Catalytic Converter	Manifold Converter
3GR	Third Gear	-
4GR	Fourth Gear	-

PREPARATION

SST (SPECIAL SERVICE TOOLS)

AT0D6-04

	09032-00100	Oil Pan Seal Cutter	
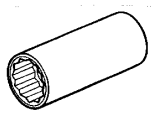	09060-20100	Deeper Socket Wrench 30 mm ★	
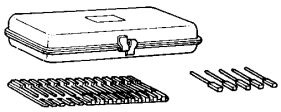	09240-00020	Wire Gauge Set	
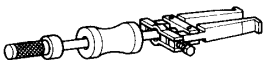	09308-00010	Oil Seal Puller	
	09309-37010	Transmission Bearing Replacer	
	09325-40010	Transmission Oil Plug	
	09350-30020	TOYOTA Automatic Transmission Tool Set	
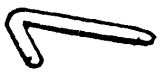	(09350-06120)	No.2 Measure Terminal	
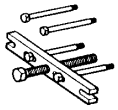	(09350-07020)	Oil Pump Puller	
	(09350-07030)	No.1 Piston Spring Compressor	
	(09350-07040)	No.2 Piston Spring Compressor	
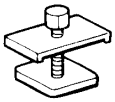	(09350-07050)	No.3 Piston Spring Compressor	
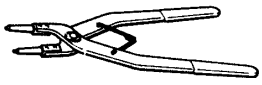	(09350-07060)	No.1 Snap Ring Expander	

	(09350-07070)	No.2 Snap Ring Expander	
	(09350-07080)	Brake Reaction Sleeve Puller	
	(09350-07090)	Brake No.1 Piston Puller	
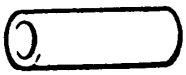	(09350-071 10)	Oil Seal Replacer	
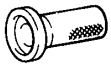	(09351-32140)	Oil Seal Replacer	
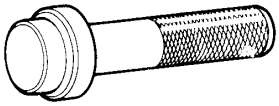	09517-36010	Rear Axle Shaft Oil Seal Replacer-	
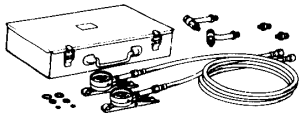	09992-00094	Automatic Transmission Oil Pressure Gauge Set	

AT0D7-03

RECOMMENDED TOOLS

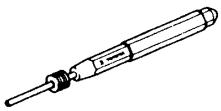	09031-00030	Pin Punch .	

AT0D8-03

EQUIPMENT

Feeler gauge	Check major clearance.
Vernier calipers	Check length of second coast brake piston rod.
Dial indicator or dial indicator with magnetic base	Check piston stroke and play of the output shaft.
Dial indicator	Check inside diameter of major bushing.
Straight edge	Check side clearance of oil pump.
Torque wrench	
Cylinder gauge	Check inside diameter of the transmission case rear bushing.
Ohmmeter	
Voltmeter	
Ammeter(A)	

AT0D9-02

LUBRICANT

Item	Capacity	Classification
Dry fill	8.2 liters (8.7 US qts, 7.2 Imp. qts)	ATF Type T-II or equivalent
Drain and refill	1.9 liters (2.0 US qts, 1.7 Imp. qts)	

AT0DA-05

SSM (SPECIAL SERVICE MATERIALS)

08826-00090	Seal Packing 1281, THREE BOND 1281 or equivalent (FIPG)	Oil pan
08833-00070	Adhesive 1324, THREE BOND 1324 or equivalent	Torque converter clutch housing Extension housing PNP switch

PREPARATION

SST (SPECIAL SERVICE TOOLS)

AT053-06

	09032-00100	Oil Pan Seal Cutter	
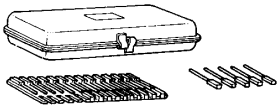	09240-00020	Wire Gauge Set	
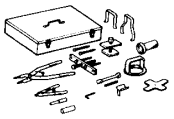	09350-30020	TOYOTA Automatic Transmission Tool Set	
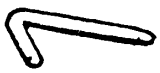	(09350-06120)	No.2 Measure Terminal	
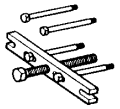	(09350-07020)	Oil Pump Puller	
	(09350-07030)	No.1 Piston Spring Compressor	
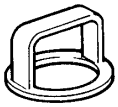	(09350-07040)	No.2 Piston Spring Compressor	
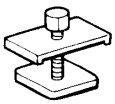	(09350-07050)	No.3 Piston Spring Compressor	
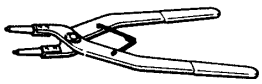	(09350-07060)	No.1 Snap Ring Expander	
	(09350-07070)	No.2 Snap Ring Expander	
	(09350-07080)	Brake Reaction Sleeve Puller	
	(09350-07090)	Brake No.1 Piston Puller	
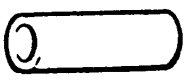	(09350-071 10)	Oil Seal Replacer	

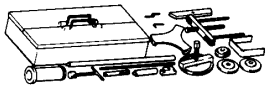	09350-36010	TOYOTA Automatic Transmission Tool Set	
	(09350-06090)	Plate	
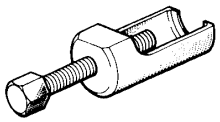	09610-20012	Pitman Arm Puller	Remove oil pump.

AT054-03

RECOMMENDED TOOLS

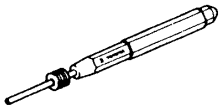	09031-00030	Pin Punch .	

AT055-03

EQUIPMENT

Feeler gauge	Check major clearance.
Vernier calipers	Check length of second coast brake piston rod.
Dial indicator or dial indicator with magnetic base	Check piston stroke and end play of the output shaft.
Dial indicator with magnetic base	Check inside diameter of major bushing.
Straight edge	Check side clearance of oil pump.
Torque wrench	
Cylinder gauge	Check inside diameter of the transmission case rear bushing.

AT056-09

LUBRICANT

Item	Capacity	Classification
Dry fill	7.2 liters (7.6 US qts, 6.3 Imp. qts)	DEXRON® II
Drain and refill	1.6 liters (1.7 US qts, 1.4 Imp. qts)	

AT057-05

SSM (SPECIAL SERVICE MATERIALS)

	08826-00090	Seal Packing 1281, THREE BOND 1281 or equivalent (FIPG)	Oil pan

STANDARD BOLT TORQUE SPECIFICATIONS

IN008-02

HOW TO DETERMINE BOLT STRENGTH

	Mark	Class		Mark	Class
Hexagon head bolt	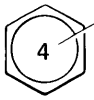 Bolt head No. 4 — 4T 5 — 5T 6 — 6T 7 — 7T 8 — 8T 9 — 9T 10 — 10T 11 — 11T		Stud bolt	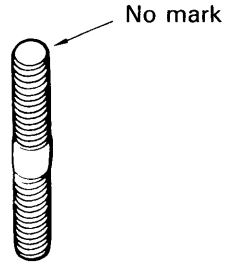	4T
	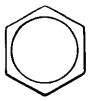 No mark	4T		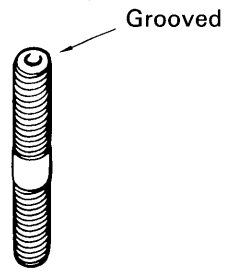	6T
Hexagon flange bolt w/ washer hexagon bolt	 No mark	4T			
Hexagon head bolt	 2 protruding lines	5T			
Hexagon flange bolt w/ washer hexagon bolt	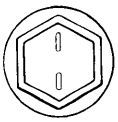 2 protruding lines	6T	Welded bolt	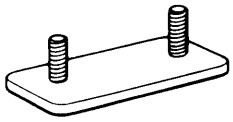	4T
Hexagon head bolt	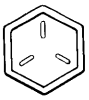 3 protruding lines	7T			
Hexagon head bolt	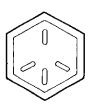 4 protruding lines	8T			

V00078

SPECIFIED TORQUE FOR STANDARD BOLTS

Class	Diameter mm	Pitch mm	Specified torque					
			Hexagon head bolt			Hexagon flange bolt		
			N·m	kgf·cm	ft·lbf	N·m	kgf·cm	ft·lbf
4T	6	1	5	55	48 in.·lbf	6	60	52 in.·lbf
	8	1.25	12.5	130	9	14	145	10
	10	1.25	26	260	19	29	290	21
	12	1.25	47	480	35	53	540	39
	14	1.5	74	760	55	84	850	61
	16	1.5	115	1,150	83	—	—	—
5T	6	1	6.5	65	56 in.·lbf	7.5	75	65 in.·lbf
	8	1.25	15.5	160	12	17.5	175	13
	10	1.25	32	330	24	36	360	26
	12	1.25	59	600	43	65	670	48
	14	1.5	91	930	67	100	1,050	76
	16	1.5	140	1,400	101	—	—	—
6T	6	1	8	80	69 in.·lbf	9	90	78 in.·lbf
	8	1.25	19	195	14	21	210	15
	10	1.25	39	400	29	44	440	32
	12	1.25	71	730	53	80	810	59
	14	1.5	110	1,100	80	125	1,250	90
	16	1.5	170	1,750	127	—	—	—
7T	6	1	10.5	110	8	12	120	9
	8	1.25	25	260	19	28	290	21
	10	1.25	52	530	38	58	590	43
	12	1.25	95	970	70	105	1,050	76
	14	1.5	145	1,500	108	165	1,700	123
	16	1.5	230	2,300	166	—	—	—
8T	8	1.25	29	300	22	33	330	24
	10	1.25	61	620	45	68	690	50
	12	1.25	110	1,100	80	120	1,250	90
9T	8	1.25	34	340	25	37	380	27
	10	1.25	70	710	51	78	790	57
	12	1.25	125	1,300	94	140	1,450	105
10T	8	1.25	38	390	28	42	430	31
	10	1.25	78	800	58	88	890	64
	12	1.25	140	1,450	105	155	1,600	116
11T	8	1.25	42	430	31	47	480	35
	10	1.25	87	890	64	97	990	72
	12	1.25	155	1,600	116	175	1,800	130

SERVICE SPECIFICATIONS

SERVICE DATA

AT0F0-04

Oil Pump

Body clearance	STD	0.07 - 0.15 mm	0.0028 - 0.0059 in.
	Maximum	0.3 mm	0.012 in.
Tip clearance	STD	0.11 - 0.14 mm	0.0043 - 0.0055 in.
	Maximum	0.3 mm	0.012 in.
Side clearance	STD	0.02 - 0.05 mm	0.0008 - 0.0020 in.
	Maximum	0.1 mm	0.004 in.
Oil pump body bushing inside diameter	Maximum	38.19 mm	1.5035 in.
Stator shaft bushing inside diameter	(Front side) Maximum	21.58 mm	0.8496 in.
	(Rear side) Maximum	27.08 mm	1.0661 in.

Second Coast Brake

Piston rod stroke	1.0 - 2.0 mm	0.039 - 0.079 in.
Piston rod length	70.7 mm	2.783 in.
	71.4 mm	2.811 in.
	72.2 mm	2.843 in.
	72.9 mm	2.870 in.
	73.1 mm	2.09 in.

Overdrive Direct Clutch

Overdrive direct clutch piston stroke		1.45 - 1.70 mm	0.0571 - 0.0669 in.
Clutch return spring free length	STD	15.8 mm	0.6220 in.
Clutch drum bushing inside diameter	Maximum	27.11 mm	1.0673 in.
Overdrive planetary gear bushing	Maximum	11.27 mm	0.4437 in.
Planetary pinion gear thrust clearance	STD	0.02 - 0.60 mm	0.0079 - 0.0236 in.
	Maximum	1.00 mm	0.0394 in.
Flange thickness	No. 16	3.6 mm	0.142 in.
	No. 17	3.5 mm	0.138 in.
	No. 18	3.4 mm	0.134 in.
	No. 19	3.3 mm	0.130 in.
	No. 20	3.2 mm	0.126 in.
	No. 21	3.1 mm	0.122 in.

Overdrive Brake

Piston return spring free length	STD	17.23 mm	0.6783 in.
Piston stroke		1.75 - 2.05 mm	0.0689 - 0.0807 in.
Flange thickness	No. 26	3.3 mm	0.130 in.
	No. 25	3.5 mm	0.138 in.
	No. 12	3.6 mm	0.142 in.
	No. 24	3.7 mm	0.146 in.
	No. 11	3.8 mm	0.150 in.
	No. 23	3.9 mm	0.154 in.
	None	4.0 mm	0.157 in.

Direct Clutch

Pack clearance		0.50 - 0.80 mm	0.0197 - 0.0315 in.
Clutch piston return spring free length	STD	23.25 mm	0.9154 in.
Clutch drum bushing inside diameter	Maximum	53.97 mm	2.1248 in.
Flange thickness	No. 86	2.7 mm	0.106 in.
	No. 85	2.8 mm	0.110 in.
	No. 84	2.9 mm	0.114 in.
	No. 33	3.0 mm	0.118 in.
	No. 32	3.1 mm	0.122 in.
	No. 31	3.2 mm	0.126 in.
	No. 30	3.3 mm	0.130 in.
	No. 29	3.4 mm	0.134 in.
	No. 28	3.5 mm	0.138 in.
	No. 27	3.6 mm	0.142 in.
	No. 34	3.7 mm	0.146 in.

Forward Clutch

Pack clearance		0.70 - 1.00 mm	0.0276 - 0.0394 in.
Clutch drum bushing inside diameter	Maximum	24.08 mm	0.9480 in.
Flange thickness	No. 61	3.0 mm	0.118 in.
	No. 60	3.2 mm	0.126 in.
	No. 45	3.4 mm	0.134 in.
	No. 62	3.6 mm	0.142 in.
	No. 44	3.8 mm	0.150 in.
	No. 42	4.0 mm	0.157 in.

Front Planetary Gear

Ring gear bushing inside diameter	Maximum	24.08 mm	0.9480 in.
Planetary pinion gear thrust clearance	STD	0.20 - 0.60 mm	0.0079 - 0.0236 in.
	Maximum	1.00 mm	0.0394 in.

Planetary Sun Gear

Sun gear bushing inside diameter	Maximum	27.08 mm	1.0661 in.

Second Brake

Pack clearance		0.49 - 1.11 mm	0.0139 - 0.0437 in.
Piston return spring free length	STD	19.64 mm	0.7732 in.

Rear Planetary Gear

Planetary pinion gear thrust clearance	STD	0.20 mm - 0.60 mm	0.0079 - 0.0236 in.
	Maximum	1.00 mm	0.0394 in.

First and Reverse Brake

Pack clearance		0.70 - 1.00 mm	0.0276 - 0.0394 in.
Piston return spring free length		12.9 mm	0.508 in.
Flange thickness	No. 68	5.4 mm	0.213 in.
	No. 67	5.2 mm	0.205 in.
	No. 50	5.0 mm	0.197 in.
	No. 51	4.8 mm	0.189 in.
	No. 52	4.6 mm	0.181 in.
	No. 53	4.4 mm	0.173 in.
	No. 54	4.2 mm	0.165 in.
	No. 55	4.0 mm	0.157 in.

Transmission Case

Transmission case bushing inside diameter	Maximum	38.18 mm	1.5031 in.

Output Shaft

Output shaft thrust play	1.63 - 2.89 mm	0.0642 - 0.1138 in.

Valve Body Spring

Spring	Free length / Outer diameter mm (in.)	Total No. of coils & (Color)	
Upper valve body			
Lock - up relay valve	23.42 (0.9220) / 5.86 (0.2307)	12.25	(Red)
Secondary regulator valve	32.79 (1.2909) / 9.40 (0.3700)	12.75	(Blue)
C_1Orifice control valve	37.13 (1.4618) / 11.14 (0.4316)	11.25	(White)
C_1Orifice control valve	21.50 (0.8465) / 7.76 (0.3055)	11.50	(None)
C_1Accumulator	75.26 (2.9623) / 15.02 (0.5193)	17.06	(Pink)
2-3 Shift valve	30.77 (1.2114) / 9.70 (0.3819)	10.50	(Purple)
3-4 Shift valve	30.77 (1.2114) / 9.70 (0.3819)	10.50	(Purple)
Reverse control valve	25.58 (1.0070) / 8.64 (0.3402)	8.75	(None)
Lower valve body			
Primary regulator valve	45.62 (1.7961) / 16.88 (0.6446)	9.5	(Blue)
Lock-up control valve	18.52 (0.7291) / 5.30 (0.209)	12.75	(White)
Cut back valve	18.80 (0.740) / 7.48 (0.2995)	7.50	(None)
Solenoid relay valve	18.80 (0.740) / 7.48 (0.2995)	7.50	(None)
Solenoid modulator valve	32.13 (1.2650) / 8.00 (0.3150)	15.75	(Yellow)
Cut off valve	20.30 (0.799) / 6.10 (0.240)	12.75	(None)
Accumulator control valve	31.17 (1.2272) / 8.85 (0.3484)	12.50	(White)
1-2 Shift valve	30.77 (1.2114) / 9.70 (0.382)	10.50	(Purple)
Coast modulator valve	21.83 (0.8594) / 8.19 (0.3150)	10.5	(Green)
Coast modulator valve	26.11 (1.027) / 8.19 (0.3224)	12.0	(Blue)
	26.60 (1.043) / 8.19 (0.3224)	12.0	(Light Blue)
	27.11 (1.067) / 8.19 (0.3224)	12.0	(White)

Valve Body key

Key	Hight mm (in.)	Width mm (in.)	Thickness mm (in.)
Upper valve body			
Check valve	10.0 (0.394)	5.0 (0.197)	3.2 (0.126)
Check valve	19.0 (0.748)	5.0 (0.197)	3.2 (0.126)
Reverse control valve	16.0 (0.630)	5.0 (0.197)	3.2 (0.126)
2-3 Shift valve	12.5 (0.492)	5.0 (0.197)	3.2 (0.126)
C_1 Accumularor	37.5 (1.476)	5.0 (0.197)	3.2 (0.126)
C_1 Orifice control valve	12.5 (0.492)	5.0 (0.197)	3.2 (0.126)
Secondary regulator valve	10.0 (0.394)	5.0 (0.197)	3.2 (0.126)
3-4 Shift valve	11.5 (0.453)	5.0 (0.197)	3.2 (0.126)
Lock-up relay valve	21.2 (0.835)	5.0 (0.197)	3.2 (0.126)
Lower valve body			
1-2 Shift valve	14.0 (0.551)	5.0 (0.197)	3.2 (0.126)
Coast modulator valve	14.0 (0.551)	5.0 (0.197)	3.2 (0.126)
Coast modulator valve	14.0 (0.551)	5.0 (0.197)	3.2 (0.126)
Primary regulator valve	13.0 (0.521)	5.0 (0.197)	3.2 (0.126)
Lock-up control valve	14.5 (0.570)	5.0 (0.197)	3.2 (0.126)
Cut back valve	8.5 (0.335)	5.0 (0.197)	3.2 (0.126)
Solenoid relay valve	12.5 (0.492)	5.0 (0.197)	3.2 (0.126)
Solenoid modulator valve	14.5 (0.570)	5.0 (0.197)	3.2 (0.126)
Cut off valve	19.0 (0.748)	5.0 (0.197)	3.2 (0.126)
Accumulator control valve	29.0 (1.142)	5.0 (0.197)	3.2 (0.126)

Accumulator Spring

Spring	Free length / Outer diameter mm (in.)	Color
B_2	75.25 (2.9626) / 19.97 (0.7862)	White & Red
C_2 (Inner)	40.0 (1.575) / 14.11 (0.5556)	White & Dark blue
C_2 (Outer)	77.51 (3.0516) / 20.1 (0.791)	Light Blue
B_0	66.97 (2.6366) / 16.24 (0.6394)	White & Blue
C_0 (Outer)	63.35 (2.5728) / 20.59 (0.8106)	White & Orange
C_0 (Inner)	38.42 (1.5126) / 14.03 (0.5524)	White

AT0F1-05

TORQUE SPECIFICATIONS

Part tightened		N·m	kgf·cm	ft·lbf
Engine x Transmissin		64	650	47
Rear support member x Body		25	260	19
Transmission housing x Transmisson case	14 mm	34	345	25
	17 mm	57	580	42
Extension housing x Transmission case		34	345	25
Packing lock pawl bracket		7	75	65 in.·lbf
O/D support x Transmission case		25	260	19
Oil pump x Transmission case		21	215	16
Oil pump body x Stator shaft		10	100	7
Valve body x Transmission case		10	100	7
Upper valve body x Lower valve body		6.5	65	56 in.·lbf
Detent spring		10	100	7
Oil strainer		10	100	7
Oil pan		7	75	65 in.·lbf
No. 1 Vehicle speed sensor		16	160	12
No. 2 Vehicle speed sensor		5.4	55	48 in.·lbf
Solenoid wiring stopper plate		5.4	55	48 in.·lbf
O/D direct clutch vehicle speed sensor		5.4	55	48 in.·lbf
Transmission output flange		123	1250	90
Throttle cable x Transmission case		5.4	55	48 in.·lbf
Union		29	300	22
Cooler pipe union nut		34	350	25
Park/Neutral position switch	Bolt	13	130	9
	Nut	6.9	70	61 in.·lbf
Control shaft lever		16	160	12

SERVICE SPECIFICATIONS

SERVICE DATE

AT06P-0F

Oil Pump

Body clearance	Standard	0.07 - 0.15 mm	0.0028 - 0.0059 in.
	Maximum	0.3 mm	0.012 in.
Tip clearance	Standard	0.11 - 0.14 mm	0.0043 - 0.0055 in.
	Maximum	0.3 mm	0.012 in.
Side clearance	Standard	0.02 - 0.05 mm	0.0008 - 0.0020 in.
	Maximum	0.1 mm	0.004 in.
Pump body bushing inside diameter	Maximum	38.19 mm	1.5035 in.
Stator shaft bushing inside diameter			
Front side	Maximum	21.58 mm	0.8496 in.
Rear side	Maximum	27.08 mm	1.0661 in.
Drive gear and driven gear thickness	Mark		
	1	9.440-9.449 (0.3717-0.3720)	
	2	9.450-9.459 (0.3720-0.3724)	
	3	9.460-9.470 (0.3724-0.3728)	
	4	9.471-9.480 (0.3720-0.3724)	
	5	9.481-9.490 (0.3729-0.3736)	

Overdrive Direct Clutch

Clutch drum bushing inside diameter	Maximum	27.11 mm	1.0673 in.
Overdrive direct clutch piston stroke		SUPRA	
		1.45 - 1.70 mm	0.0571 - 0.0669 in.
		OTHERS	
		1.85 - 2.15 mm	0.0728 - 0.0846 in.
Overdrive planetary gear bushing	Maximum	11.27 mm	0.4437 in.
Planetary pinion gear thrust clearance	Standard	0.20 - 0.60 mm	0.0079 - 0.0236 in.
	Maximum	1.00 mm	0.0394 in.
Flange thickness	No.16	3.6 mm	0.142 in.
	No.17	3.5 mm	0.138 in.
	No.18	3.4 mm	0.134 in.
	No.19	3.3 mm	0.130 in.
	No.20	3.2 mm	0.126 in.
	No.21	3.1 mm	0.122 in.

Overdrive Brake

Piston stroke		PREVIA	
		1.32 -1.62 mm	0.0520 - 0.0638 in.
		OTHERS	
		1.40 -1.70 mm	0.0551 - 0.0669 in.
Flange thickness	No.77	3.3 mm	0.130 in.
	No.78	3.5 mm	0.138 in.
	No.79	3.6 mm	0.142 in.
	No.80	3.7 mm	0.146 in.
	No.81	3.8 mm	0.150 in.
	No.82	3.9 mm	0.154 in.
	None	4.0 mm	0.157 in.

Direct Clutch

Piston stroke		1.37 - 1.60 mm	0.0359 - 0.0630 in.
Drum bushing inside diameter		53.99 mm	2.1256 in.
Flange thickness	No.33	3.0 mm	0.118 in.
	No.32	3.1 mm	0.122 in.
	No.31	3.2 mm	0.126 in.
	No.30	3.3 mm	0.130 in.
	No.29	3.4 mm	0.134 in.
	No.28	3.5 mm	0.138 in.
	No.27	3.6 mm	0.142 in.
	No.34	3.7 mm	0.146 in.

Forward Clutch

Pack clearance		0.5 - 0.9 mm	0.020 - 0.035 in.
Drum bushing inside diameter		24.08 mm	0.9480 in.
Flange thickness	No.61	3.0 mm	0.118 in.
	No.60	3.2 mm	0.126 in.
	No.45	3.4 mm	0.134 in.
	No.62	3.6 mm	0.142 in.
	No.44	3.8 mm	0.150 in.
	No.42	4.0 mm	0.157 in.
	No.63	4.2 mm	0.165 in.
	No.64	4.4 mm	0.173 in.

Second Coast Brake

Piston stroke		1.5 - 3.0 mm	0.059 - 0.118 in.
Piston rod length		72.9 mm	2.870 in.
		71.4 mm	2.811 in.

Front Planetary Gear

Maximum inside diameter		24.08 mm	0.9480 in.
Planetary pinion gear thrust clearance	Standard	0.20 - 0.60 mm	0.0079 - 0.0236 in.
	Maximum	1.00 mm	0.0394 in.

Planetary Sun Gear

Sun gear bushing inside diameter	Maximum	27.08 mm	1.0661 in.

Second Brake

Pack clearance		0.62 - 1.98 mm	0.0244 - 0.0780 in.

First and Reverse Brake

Pack clearance		0.60 - 1.12 mm	0.0236 -0.0441 in.
Flange thickness	No.50	5.0 mm	0.197 in.
	No.51	4.8 mm	0.189 in.
	No.52	4.6 mm	0.181 in.
	No.53	4.4 mm	0.173 in.
	No.54	4.2 mm	0.165 in.
	No.55	4.0 mm	0.157 in.

Rear Planetary Gear

Planetary pinion gear thrust clearance	Standard	0.20 - 0.60 mm	0.0079 - 0.0236 in.
	Maximum	1.00 mm	0.0394 in.

Valve Body Spring

Spring	Free length and Coil outer diameter mm (in.)		Total No. of coils and Color	
Upper valve body				
Secondary regulator valve	30.9 (1.217)	11.2 (0.441)	10.5	Blue
Lock-up relay valve	21.4 (0.843)	5.5 (0.217)	17.5	Light Gray
3 - 4 shift valve	30.8 (1.213)	9.7 (0.382)	10.5	Purple
Down shift plug	27.3 (1.075)	8.7 (0.343)	12.5	Yellow
Throttle valve	20.6 (0.811)	9.2 (0.362)	9.5	Blue
	or 23.3 (0.917)	9.2 (0.362)	9.5	White
SUPRA, PREVIA Second coast modulator valve	24.6 (0.967)	8.3 (0.327)	9.0	Orange
OTHERS Second coast modulator valve	25.3 (0.996)	8.6 (0.339)	9.5	Orange
Cut-back valve	21.8 (0.858)	6.0 (0.236)	13.5	Red
2 - 3 shift valve	30.8 (1.213)	9.7 (0.382)	10.5	Blue
SUPRA, PREVIA Low coast modulator valve	26.4 (1.039)	8.3 (0.327)	10.5	Yellow
OTHERS Low coast modulator valve	30.4 (1.197)	8.3 (0.327)	10.5	Yellow
Lower valve body				
Check valve	20.2 (0.796)	12.1 (0.476)	6.5	None
Pressure relief valve	11.2 (0.441)	6.4 (0.252)	7.5	None
1 - 2 shift valve	30.8 (1.213)	9.7 (0.382)	10.5	Purple
Primary regulator valve	62.3 (2.453)	18.6 (0.732)	12.5	Purple
SUPRA Accumulator control valve	36.1 (1.421)	8.9 (0.327)	14.0	White
OTHERS Accumulator control valve	33.9 (1.335)	8.8 (0.346)	12.0	Pink

Valve Body Key

Key	Height mm (in.)	Width mm (in.)	Thickness mm (in.)
Upper valve body			
Low coast modulator valve	14.5 (0.571)	5.0 (0.197)	3.2 (0.126)
2 - 3 shift valve	14.0 (0.551)	5.0 (0.197)	3.2 (0.126)
Cut-back valve	15.0 (0.591)	5.0 (0.197)	3.2 (0.126)
Secondary regulator valve	14.0 (0.551)	5.0 (0.197)	3.2 (0.126)
Lock-up relay valve	21.2 (0.835)	5.0 (0.197)	3.2 (0.126)
3 - 4 shift valve	16.5 (0.650)	5.0 (0.197)	3.2 (0.126)
2nd coast modulator valve	16.5 (0.650)	5.0 (0.197)	3.2 (0.126)
Lower valve body			
Accumulator control valve	21.2 (0.835)	5.0 (0.197)	3.2 (0.126)
1 - 2 shift valve	16.5 (0.650)	6.0 (0.236)	3.2 (0.126)
Primary regulator valve	16.2 (0.638)	5.0 (0.197)	3.2 (0.126)

Transmission Case

Transmission case bushing	Maximum	38.19 mm	1.5035 in.

Extension Housing

Extension housing bushing	Maximum	40.09 mm	1.5783 in.

Output Shaft

Thrust play	0.27 - 0.86 mm	0.0106 - 0.0339 in.

Accumulator Spring

SUPRA:

Spring	(Color)	Free length mm (in.)	Outer diameter mm (in.)
B_2	(Red)	73.4 (2.890)	19.9 (0.783)
C_2 (Inner)	(Pink)	42.1 (1.657)	14.7 (0.579)
C_2 (Outer)	(Purple)	70.2 (2.764)	20.2 (0.795)
B_0	(White & Blue)	67.0 (2.638)	16.2 (0.638)
C_0 (Outer)	(Orange)	74.6 (2.397)	20.9 (0.823)
C_0 (Inner)	(Yellow)	46.0 (1.811)	14.0 (0.551)

TRUCK, 4 RUNNER, T100:

Spring	(Color)	Free length mm (in.)	Outer diameter mm (in.)
B_2	(Yellow)	70.5 (2.776)	19.7 (0.776)
C_2 (Inner)	(Pink)	42.1 (1.657)	14.7 (0.579)
C_2 (Outer)	(Purple)	70.2 (2.764)	20.2 (0.795)
B_0	(Green)	62.0 (2.441)	16.0 (0.630)
C_0 (Outer)	(Orange)	74.6 (2.397)	20.9 (0.823)
C_0 (Inner)	(Yellow)	46.0 (1.811)	14.0 (0.551)

PREVIA:

Spring	(Color)	Free length mm (in.)	Outer diameter mm (in.)
B_2	(White & Red)	75.3 (2.965)	20.0 (0.787)
C_2 (Inner)	(Pink)	42.1 (1.657)	14.7 (0.579)
C_2 (Outer)	(Purple)	70.2 (2.764)	20.2 (0.795)
B_0	(White & Blue)	67.0 (2.638)	16.2 (0.638)
C_0 (Outer)	(Orange)	74.6 (2.397)	20.9 (0.823)
C_0 (Inner)	(Yellow)	46.0 (1.811)	14.0 (0.551)

AT06Q-0E

TORQUE SPECIFICATION

Part tightened		N·m	kgf·cm	ft·lbf
Stator shaft x Oil pump body		10	100	7
Upper valve body x Lower valve body		6.4	65	56 in.·lbf
Detent spring x Valve body		10	100	7
Parking lock pawl bracket		7.4	75	65 in.·lbf
Overdrive support x Transmission case		25	260	19
Oil pump x Transmission case		22	220	16
Valve body x Transmission case		10	100	7
Oil strainer x Valve body		10	100	7
Solenoid x Valve body		10	100	7
Oil pan x Transmission case		7.4	75	65 in.·lbf
Extension housing x Transmission case		36	370	27
Transmission housing	10 mm bolt	34	345	25
	12 mm bolt	57	580	42
Union		29	300	22
Vehicle speed sensor		16	160	12
Park/Neutral position switch		6.9	70	61 in.·lbf
Park/Neutral position switch adjusting bolt		13	130	9
Control shaft lever		16	160	12

SERVICE SPECIFICATIONS

SERVICE DATE

AT06P-0D

Oil Pump

Body clearance	STD	0.07 - 0.15 mm	0.0028 - 0.0059 in.
	Maximum	0.3 mm	0.012 in.
Tip clearance	STD	0.11 - 0.14 mm	0.0043 - 0.0055 in.
	Maximum	0.3 mm	0.012 in.
Side clearance	STD	0.02 - 0.05 mm	0.0008 - 0.0020 in.
	Maximum	0.1 mm	0.004 in.
Pump body bushing inside diameter	Maximum	38.19 mm	1.5035 in.
Stator shaft bushing inside diameter			
Front side	Maximum	21.58 mm	0.8496 in.
Rear side	Maximum	27.08 mm	1.0661 in.

Overdrive Direct Clutch

Clutch drum bushing inside diameter	Maximum	27.11 mm	1.0673 in.
Overdrive direct clutch piston stroke		1.85 - 2.15 mm	0.0728 - 0.0846 in.
Overdrive planetary gear bushing	Maximum	11.27 mm	0.4437 in.
Planetary pinion gear thrust clearance	STD	0.20 - 0.60 mm	0.0079 - 0.0236 in.
	Maximum	1.00 mm	0.0394 in.
Flange thickness	No.16	3.6 mm	0.142 in.
	No.17	3.5 mm	0.138 in.
	No.18	3.4 mm	0.134 in.
	No.19	3.3 mm	0.130 in.
	No.20	3.2 mm	0.126 in.
	No.21	3.1 mm	0.122 in.

Overdrive Brake

Piston stroke		1.40 - 1.70 mm	0.0551 - 0.0669 in.

Direct Clutch

Piston stroke		1.37 - 1.60 mm	0.0359 - 0.0630 in.
Drum bushing inside diameter		53.99 mm	2.1256 in.
Flange thickness	No.33	3.0 mm	0.118 in.
	No.32	3.1 mm	0.122 in.
	No.31	3.2 mm	0.126 in.
	No.30	3.3 mm	0.130 in.
	No.29	3.4 mm	0.134 in.
	No.28	3.5 mm	0.138 in.
	No.27	3.6 mm	0.142 in.
	No.34	3.7 mm	0.146 in.

Forward Clutch

Pack clearance		0.5 - 0.9 mm	0.020 - 0.035 in.
Drum bushing inside diameter		24.08 mm	0.9480 in.
Flange thickness	No.61	3.0 mm	0.118 in.
	No.60	3.2 mm	0.126 in.
	No.45	3.4 mm	0.134 in.
	No.62	3.6 mm	0.142 in.
	No.44	3.8 mm	0.150 in.
	No.42	4.0 mm	0.157 in.
	No.63	4.2 mm	0.165 in.
	No.64	4.4 mm	0.173 in.

Second Coast Brake

Piston stroke		1.5 - 3.0 mm	0.059 - 0.118 in.
Piston rod length		72.9 mm	2.870 in.
		71.4 mm	2.811 in.

Front Planetary Gear

Maximum inside diameter		24.08 mm	0.9480 in.
Planetary pinion gear thrust clearance	STD	0.20 - 0.60 mm	0.0079 - 0.0236 in.
	Maximum	1.00 mm	0.0394 in.

Planetary Sun Gear

Sun gear bushing inside diameter	Maximum	27.08 mm	1.0661 in.

Second Brake

Pack clearance		0.62 - 1.98 mm	0.0244 - 0.0780 in.

First and Reverse Brake

Pack clearance		0.60 - 1.32 mm	0.0236 - 0.0520 in.

Rear Planetary Gear

Planetary pinion gear thrust clearance	STD	0.20 - 0.60 mm	0.0079 - 0.0236 in.
	Maximum	1.00 mm	0.0394 in.

Valve Body Spring

Spring	Free length and Coil outer diameter mm (in.)		Total No. of coils and Color	
Upper valve body				
Secondary regulator valve	30.9 (1.217)	11.2 (0.441)	10.5	Blue
Lock-up relay valve	21.4 (0.843)	5.5 (0.217)	17.5	Light Gray
3 - 4 shift valve	30.8 (1.213)	9.7 (0.382)	10.5	Purple
Down shift plug	27.3 (1.075)	8.7 (0.343)	12.5	Yellow
Throttle valve	20.6 (0.811)	9.2 (0.362)	9.5	Blue
	or 23.3 (0.917)	9.2 (0.362)	9.5	White
Second coast modulator valve	25.3 (0.996)	8.6 (0.339)	11.5	Orange
Cut-back valve	21.8 (0.858)	6.0 (0.236)	13.5	Red
2 - 3 shift valve	30.8 (1.213)	9.7 (0.382)	10.5	Blue
Low coast modulator valve	30.4 (1.197)	8.3 (0.327)	10.5	Light Green
Lower valve body				
Check valve	20.2 (0.796)	12.1 (0.476)	6.5	None
Pressure relief valve	11.2 (0.441)	6.4 (0.252)	7.5	None
1 - 2 shift valve	30.8 (1.213)	9.7 (0.382)	10.5	Purple
Primary regulator valve	62.3 (2.453)	18.6 (0.732)	12.5	Purple
Accumulator control valve	33.9 (1.335)	8.8 (0.346)	12.0	Pink

Valve Body Key

Key	Height mm (in.)	Width mm (in.)	Thickness mm (in.)
Upper valve body			
Low coast modulator valve	14.5 (0.571)	5.0 (0.197)	3.2 (0.126)
2 - 3 shift valve	14.0 (0.551)	5.0 (0.197)	3.2 (0.126)
Cut-back valve	15.0 (0.591)	5.0 (0.197)	3.2 (0.126)
Secondary regulator valve	14.0 (0.551)	5.0 (0.197)	3.2 (0.126)
Lock-up relay valve	21.2 (0.835)	5.0 (0.197)	3.2 (0.126)
3 - 4 shift valve	16.5 (0.650)	5.0 (0.197)	3.2 (0.126)
2nd coast modulator valve	16.5 (0.650)	5.0 (0.197)	3.2 (0.126)
Lower valve body			
Accumulator control valve	21.2 (0.835)	5.0 (0.197)	3.2 (0.126)
1 - 2 shift valve	16.5 (0.650)	5.0 (0.197)	3.2 (0.126)
Primary regulator valve	16.2 (0.638)	5.0 (0.197)	3.2 (0.126)

Output Shaft

Thrust play	0.27 - 0.86 mm	0.0106 - 0.0339 in.

Transfer Direct Clutch

Piston stroke	2.28 - 2.68 mm	0.0898 - 0.1055 in.
Drum bushing inside diameter	47.65 mm	1.8760 in.
Flange thickness	3.9 mm	0.154 in.
	4.1 mm	0.161 in.
	4.3 mm	0.169 in.
	4.5 mm	0.177 in.

Transfer Low Speed Brake

Center support bushing inside diameter	35.08 mm	1.3811 in.
Ring gear flange bushing inside diameter	35.08 mm	1.3811 in.
Planetary gear bushing inside diameter	18.08 mm	0.7118 in.
Planetary pinion gear thrust clearance STD	0.30 - 0.60 mm	0.0118 - 0.0236 in.
Maximum	1.00 mm	0.0394 in.

Transfer Front Drive Clutch

Piston stroke	2.38 - 3.22 mm	0.0937 - 0.1268 in.

Transfer Valve Body Spring

Spring	Free length and Coil outer diameter mm (in.)		Total No. of coils and Color	
Upper valve body				
Direct clutch accumulator valve	55.7 (2.193)	18.3 (0.720)	11.1	Blue
Center valve body				
Accumulator control valve	29.3 (1.154)	8.2 (0.323)	11.8	White
Low-high relay valve	31.7 (1.248)	8.5 (0.335)	11.2	Light Blue
Low shift valve	29.2 (1.213)	8.2 (0.323)		
Lower valve body				
Low-high shift timing valve	33.1 (1.303)	8.7 (0.343)	15.0	Red
Low-high orifice control valve	29.7 (1.196)	9.0 (0.354)	12.3	Green

Transfer Valve Body Key

Key	Height mm (in.)	Width mm (in.)	Thickness mm (in.)
Upper valve body			
Direct clutch accumulator valve	9.5 (0.374)	9.5 (0.374)	3.2 (0.126)
Center valve body			
Accumulator control valve	21.2 (0.835)	5.0 (0.197)	3.2 (0.126)
Low-high relay valve	8.5 (0.335)	5.0 (0.197)	3.2 (0.126)
Low shift valve	9.5 (0.374)	5.0 (0.197)	3.2 (0.126)
Lower valve body			
Low-high shift timing valve	8.5 (0.335)	5.0 (0.197)	3.2 (0.126)
Low-high orifice control valve	8.5 (0.335)	5.0 (0.197)	3.2 (0.126)

Transfer Case And Front Support

Front support bushing inside diameter	31.40 mm 1.2362 in.

Transfer Chain Front Case

Front drive shaft oil seal depth		2.7 - 3.3 mm 0.106 - 0.130 in.
Output shaft oil seal depth	Front	11.0 - 11.3 mm 0.433 - 0.445 in.
	Rear	0 - +0.3 mm 0 - +0.012 in.

Transfer Chain Rear Case

Front drive shaft bearing depth		1.2 - 1.8 mm 0.047 - 0.071 in.
Output shaft oil seal depth	Front	11.0 - 11.3 mm 0.433 - 0.445 in.
	Rear	0 - +0.3 mm 0 - +0.012 in.

Transfer Oil Pump

Body clearance	STD	0.07 - 0.15 mm 0.0028 - 0.0059 in.
	Maximum	0.3 mm 0.012 in.
Tip clearance	STD	0.15 - 0.42 mm 0.0059 - 0.0165 in.
	Maximum	0.6 mm 0.024 in.
Side clearance	STD	0.04 - 0.15 mm 0.0016 - 0.0059 in.

Transfer Extension Housing

Extension housing oil seal depth	2.7 - 3.3 mm 0.106 - 0.130 in.

Accumulator Spring

Spring		Free length / Outer diameter mm (in.)	Color
B_2		70.5 (2.776) / 19.7(0.776)	Yellow
C_2	Inner	42.1 (1.657) / 14.7 (0.579)	Pink
C_2	Outer	70.2 (2.764) / 20.2 (0.795)	Purple
B_0		62.0 (2.441) / 16.0 (0.630)	Green
C_0	Outer	74.6 (2.937) / 20.9 (0.823)	Orange
C_0	Inner	46.0 (1.811) / 14.0 (0.551)	Yellow

AT06Q-08

TORQUE SPECIFICATION

Part tightened	N·m	kgf·cm	ft·lbf
Stator shaft x Oil pump body	10	100	7
Upper valve body x Lower valve body	6.4	65	56 in.·lbf
Detent spring x Valve body	10	100	7
Transfer lower valve body x Transfer center valve body	6.4	65	56 in.·lbf
Transfer center valve body x Transfer upper valve body	6.4	65	56 in.·lbf
Transfer upper valve body x Transfer lower valve body	6.4	65	56 in.·lbf
No.4 solenoid x Valve body	10	100	7
Transfer pressure switch x Valve body	6.9	70	61 in.·lbf
Transfer oil strainer x Transfer chain rear case	6.9	70	61 in.·lbf
Transfer oil pump x Transfer oil pump cover	10	100	7
Oil pump x Transmission case	22	220	16
Parking lock pawl bracket	7.4	75	65 in.·lbf
Transfer case x Transmission case	34	345	25
Transfer front support x Transfer case	34	345	25
Transfer chain front case x Transfer case	34	345	25
Oil receiver x Transfer chain front case	10	100	7
Transfer chain front case x Transfer chain rear case	34	345	25
Transfer oil pump x Transfer chain rear case	16	160	12
Transfer extension housing x Transfer chain rear case	34	345	25
Front companion flange	123	1,250	90
Rear companion flange	123	1,250	90
Overdrive case x Transmission case	25	260	19
Valve body x Transmission case	10	100	7
Oil strainer case x Valve body	10	100	7
Oil strainer case x Oil strainer	6.9	70	61 in.·lbf
Transfer valve body x Transfer case	10	100	7
Transfer oil pan x Transfer case	7.4	75	65 in.·lbf
Transfer position switch	3.9	40	35 in.·lbf
Transfer control shaft lever	16	160	12
Speedometer drive gear	16	160	12
Transfer oil cooler tube	34	345	25
Transmission fluid temperature sensor	15	150	11
Transfer fluid temperature sensor	15	150	11
Transmission oil pan x Transmission case	7.4	75	65 in.·lbf
Transmission housing 14 mm bolt	34	345	25
Transmission housing 17 mm bolt	57	580	42
Union	29	300	22
Park/Neutral position switch	6.9	70	61 in.·lbf
Park/Neutral position switch adjusting bolt	13	130	9
Control shaft lever	16	160	12

SERVICE SPECIFICATIONS

SERVICE DATE

AT06P-0E

Oil Pump

Body clearance	Standard	0.07 - 0.15 mm	0.0028 - 0.0059 in.
	Maximum	0.3 mm	0.012 in.
Tip clearance	Standard	0.11 - 0.14 mm	0.0043 - 0.0055 in.
	Maximum	0.3 mm	0.012 in.
Side clearance	Standard	0.02 - 0.05 mm	0.0008 - 0.0020 in.
	Maximum	0.1 mm	0.004 in.
Pump body bushing inside diameter	Maximum	38.19 mm	1.5035 in.
Stator shaft bushing inside diameter			
Front side	Maximum	21.58 mm	0.8496 in.
Rear side	Maximum	27.08 mm	1.0661 in.

Overdirve Direct Clutch

Clutch drum bushing inside diameter	Maximum	27.11 mm	1.0673 in.
Overdrive direct clutch piston stroke		1.77 - 2.07 mm	0.0697 - 0.0815 in.
Overdrive planetary gear bushing	Maximum	11.27 mm	0.4437 in.
Planetary pinion gear thrust clearance	Standard	0.20 - 0.60 mm	0.0079 - 0.0236 in.
	Maximum	1.00 mm	0.0394 in.
Flange thickness	No.16	3.6 mm	0.142 in.
	No.17	3.5 mm	0.138 in.
	No.18	3.4 mm	0.134 in.
	No.19	3.3 mm	0.130 in.
	No.20	3.2 mm	0.126 in.
	No.21	3.1 mm	0.122 in.

Overdrive Brake

Piston stroke		1.32 - 1.62 mm	0.0520 - 0.0638 in.
Flange thickness	No.77	3.3 mm	0.130 in.
	No.78	3.5 mm	0.138 in.
	No.79	3.6 mm	0.142 in.
	No.80	3.7 mm	0.146 in.
	No.81	3.8 mm	0.150 in.
	No.82	3.9 mm	0.154 in.
	None	4.0 mm	0.157 in.

Direct Clutch

Piston stroke		1.03 - 1.33 mm	0.0405 - 0.0524 in.
Drum bushing inside diameter		53.99 mm	2.1256 in.
Flange thickness	No.33	3.0 mm	0.118 in.
	No.32	3.1 mm	0.122 in.
	No.31	3.2 mm	0.126 in.
	No.30	3.3 mm	0.130 in.
	No.29	3.4 mm	0.134 in.
	No.28	3.5 mm	0.138 in.
	No.27	3.6 mm	0.142 in.
	No.34	3.7 mm	0.146 in.

Forward Clutch

Pack clearance		0.4 - 0.8 mm	0.016 - 0.031 in.
Drum bushing inside diameter		24.08 mm	0.9480 in.
Flange thickness	No.61	3.0 mm	0.118 in.
	No.60	3.2 mm	0.126 in.
	No.45	3.4 mm	0.134 in.
	No.62	3.6 mm	0.142 in.
	No.44	3.8 mm	0.150 in.
	No.42	4.0 mm	0.157 in.
	No.63	4.2 mm	0.165 in.
	No.64	4.4 mm	0.173 in.

Second Coast Brake

Piston stroke		1.5 - 3.0 mm	0.059 - 0.118 in.
Piston rod length		72.9 mm	2.870 in.
		71.4 mm	2.811 in.

Front Planetary Gear

Maximum inside diameter		24.08 mm	0.9480 in.
Planetary pinion gear thrust clearance	Standard	0.20 - 0.60 mm	0.0079 - 0.0236 in.
	Maximum	1.00 mm	0.0394 in.

Planetary Sun Gear

Sun gear bushing inside diameter	Maximum	27.08 mm	1.0661 in.

Second Brake

Pack clearance		0.50 - 1.76 mm	0.0197 - 0.0693 in.

First and Reverse Brake

Pack clearance		0.50 - 1.02 mm	0.0197 - 0.0402 in.
Flange thickness	No.50	5.0 mm	0.197 in.
	No.51	4.8 mm	0.189 in.
	No.52	4.6 mm	0.181 in.
	No.53	4.4 mm	0.173 in.
	No.54	4.2 mm	0.165 in.
	No.55	4.0 mm	0.157 in.

Rear Planetary Gear

Planetary pinion gear thrust clearance	Standard	0.20 - 0.60 mm	0.0079 - 0.0236 in.
	Maximum	1.00 mm	0.0394 in.

Valve Body Spring

Spring	Free length and Coil outer diameter mm (in.)		Total No. of coils and Color	
Upper valve body				
Secondary regulator valve	30.9 (1.217)	11.2 (0.441)	10.5	Blue
Lock-up relay valve	21.4 (0.843)	5.5 (0.217)	17.5	Light Gray
3 - 4 shift valve	30.8 (1.213)	9.7 (0.382)	10.5	Purple
Down shift plug	27.3 (1.075)	8.7 (0.343)	12.5	Yellow
Throttle valve	20.6 (0.811)	9.2 (0.362)	9.5	Blue
	or 23.3 (0.917)	9.2 (0.362)	9.5	White
Second coast modulator valve	25.3 (0.996)	8.6 (0.339)	11.5	Orange
Cut-back valve	21.8 (0.858)	6.0 (0.236)	13.5	Red
2 - 3 shift valve	30.8 (1.213)	9.7 (0.382)	10.5	Blue
Low coast modulator valve	30.4 (1.197)	8.3 (0.327)	10.5	Light Green
Lower valve body				
Check valve	20.2 (0.796)	12.1 (0.476)	6.5	None
Pressure relief valve	11.2 (0.441)	6.4 (0.252)	7.5	None
1 - 2 shift valve	30.8 (1.213)	9.7 (0.382)	10.5	Purple
Primary regulator valve	62.3 (2.453)	18.6 (0.732)	12.5	Purple
Accumulator control valve	33.9 (1.335)	8.8 (0.346)	12.0	Pink

Valve Body Key

Key	Height mm (in.)	Width mm (in.)	Thickness mm (in.)
Upper valve body			
Low coast modulator valve	14.5 (0.571)	5.0 (0.197)	3.2 (0.126)
2 - 3 shift valve	14.0 (0.551)	5.0 (0.197)	3.2 (0.126)
Cut-back valve	15.0 (0.591)	5.0 (0.197)	3.2 (0.126)
Secondary regulator valve	14.0 (0.551)	5.0 (0.197)	3.2 (0.126)
Lock-up relay valve	21.2 (0.835)	5.0 (0.197)	3.2 (0.126)
3 - 4 shift valve	16.5 (0.650)	5.0 (0.197)	3.2 (0.126)
2nd coast modulator valve	16.5 (0.650)	5.0 (0.197)	3.2 (0.126)
Lower valve body			
Accumulator control valve	21.2 (0.835)	5.0 (0.197)	3.2 (0.126)
1 - 2 shift valve	16.5 (0.650)	6.0 (0.236)	3.2 (0.126)
Primary regulator valve	16.2 (0.638)	5.0 (0.197)	3.2 (0.126)

Transmission Case

Transmission case bushing	Maximum	38.19 mm	1.5035 in.

Output Shaft

Thrust play	0.27 - 0.86 mm	0.0106 - 0.0339 in.

Accumulator Spring

Spring	(Color)	Free length mm (in.)	Outer diameter mm(in.)
B_2	(Yellow)	70.5 (2.776)	19.7 (0.776)
C_2	(Blue)	68.5 (2.698)	20.2 (0.795)
B_0	(Light Green)	69.7 (2.744)	16.7 (0.657)
C_0	(White)	67.0 (2.638)	17.8 (0.701)

AT06Q-0D

TORQUE SPECIFICATION

Part tightened		N·m	kgf·cm	ft·lbf
Stator shaft x Oil pump body		10	100	7
Upper valve body x Lower valve body		6.4	65	56 <in.lbf>
Detent spring x Valve body		10	100	7
Parking lock pawl bracket		7.4	75	65 in.·lbf
Overdrive support x Transmission case		25	260	19
Oil pump x Transmission case		22	220	16
Valve body x Transmisson case		10	100	7
Oil strainer x Valve body		10	100	7
Solenoid x Valve body		10	100	7
Oil pan x Transmission case		7.4	75	65 in.·lbf
Transmission housing	14 mm bolt	34	345	25
	17 mm bolt	57	580	42
Union		29	300	22
Vehicle speed sensor		16	160	12
Park/Neutral position switch		6.9	70	61 in.·lbf
Park/Neutral position switch adjusting bolt		13	130	9
Control shaft lever		16	160	12
Transmission case x Transfer adaptor		34	345	25
Transfer adaptor x Transfer		36	370	27
Dynamic damper		37	380	27

DESCRIPTION

GENERAL DESCRIPTION

AT0D4-06

The A340E automatic transmission is a 4-Speed Electronically Controlled Transmission with an intelligent control. The A340E automatic transmission have the following features.

★ When shifting, the clutch hydraulic pressure in the transmission is controlled by the ECM to reduce transmission shift shock.to reduce transmission shift shock.

★ A new type of ATF (ATF Type T-II) is used which provides improved shifting characteristics and prevents deterioration in the ATF over time.

HINT: The A340E automatic transmission use ATF Type T-II or equivalent.

A super flow torque converter clutch is used to improve transmission efficiency.

The A340E automatic transmission is mainly composed of a torque converter clutch with lock-up clutch, a 4-speed planetary gear unit, a hydraulic control system and an electronic control system.

To minimize the possibility of incorrect operation of the automatic transmission, a shift lock mechanism has also been added.

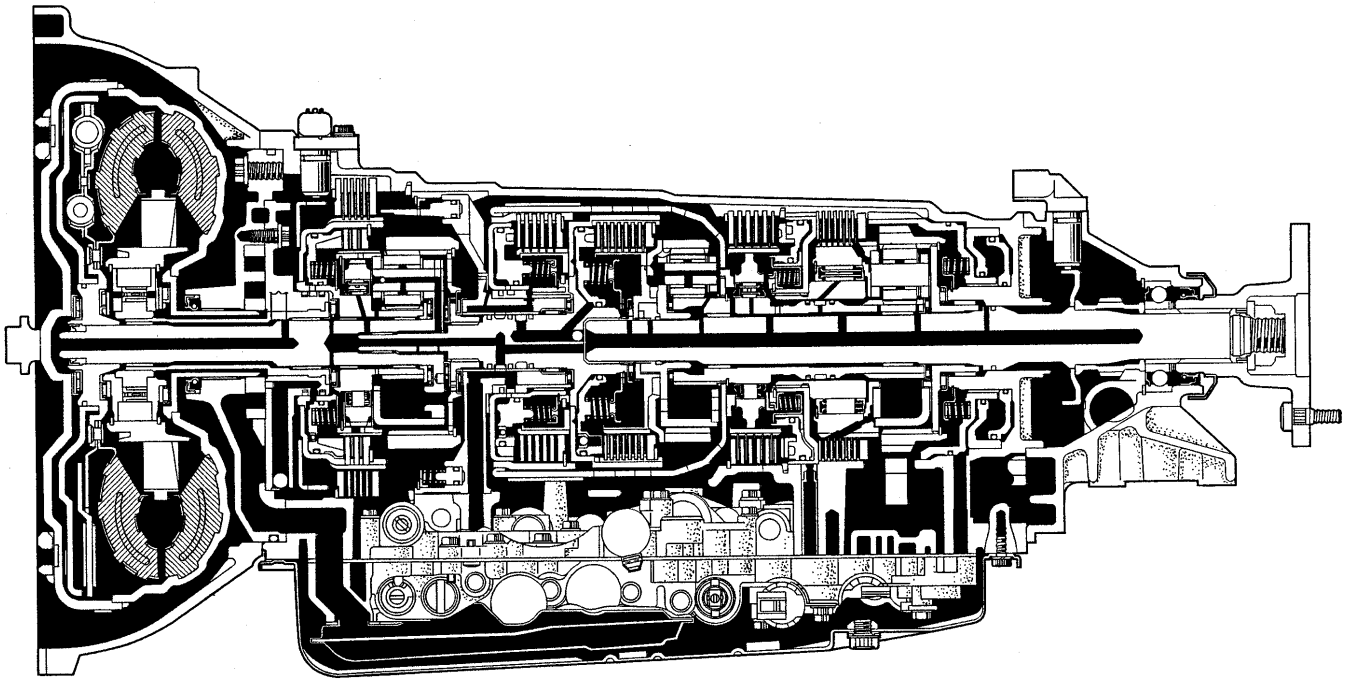

V03556

Transmission Specifications

Type of Transmisson		A340E
Type of Engine		2JZ-GTE
Torque Converter Clutch Stall Torque Ratio		2.000 : 1
Lock-up Mechanism		Equipped
Gear Ratio	1st Gear	2.804
	2nd Gear	1.531
	3rd Gear	1.000
	O/D Gear	0.705
	Reverse Gear	2.393
Number of Discs and Plates	(Disc and Plate)	
	O/D Direct Clutch (C_0)	2 / 2
	Forward Clutch (C_1)	7 / 7
	Direct Clutch (C_2)	5 / 5
	No.2 Brake (B_2)	5 / 5
	1st and Reverse Brake (B_3)	7 / 7
	O/D Brake (B_0)	5 / 5
Sedond Coast Brake Band Width	mm (in.)	40 (1.57)
ATF Type		ATF Type T-II or equivalent
Capacity Liter (US qts, Imp.qts)	Total	8.2 (8.7 , 7.2)
	Drain and Refill	1.9 (2.0 , 1.7)

OPERATION

1. OPERATING CONDITIONS

AT0PT-03

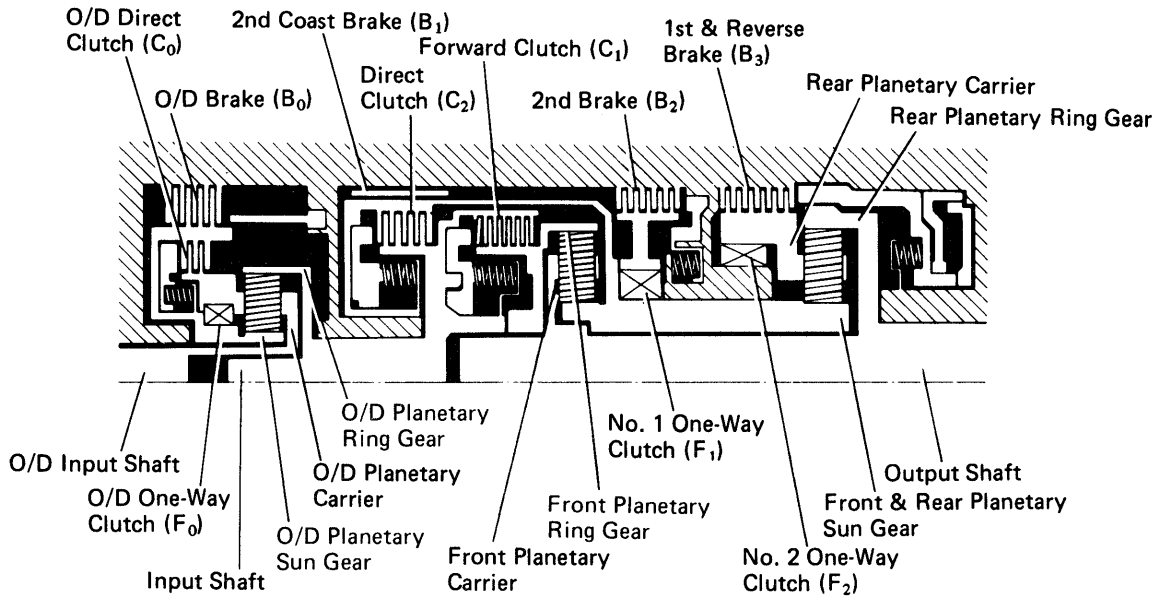

AT2157

○ ..... Operating

Shift lever position	Gear position	C_0	C_1	C_2	B_0	B_1	B_2	B_3	F_0	F_1	F_2
P	Parking	○									
R	Reverse	○		○				○	○		
N	Neutral	○									
D	1st	○	○						○		○
	2nd	○	○				○		○	○	
	3rd	○	○	○			○		○		
	O/D		○	○	○		○				
2	1st	○	○						○		○
	2nd	○	○			○	○		○	○	
	3rd	○	○	○			○		○		
L	1st	○	○					○	○		○
	*2nd	○	○			○	○		○	○	

* Down-shift only in the L position and 2nd gear — no up-shift.

V03089

2. COMPONENTS FUNCTION

NOMENCLATURE	OPERATION
O/D Direct Clutch (C_0)	Connects overdrive sun gear and overdrive carrier
O/D Brake (B_0)	Prevents overdrive sun gear from turning either clockwise or counterclockwise
O/D One-Way Clutch (F_0)	When transmission is being driven by engine, connects overdrive sun gear and overdrive carrier
Forward Clutch (C_1)	Connects input shaft and front planetary ring gear
Direct Clutch (C_2)	Connects input shaft and front & rear planetary sun gear
2nd Coast Brake (B_1)	Prevents front & rear planetary sun gear from turning either clockwise or counterclockwise
2nd Brake (B_2)	Prevents outer race of F_1 from turning either clockwise or counterclockwise, thus preventing front & rear planetary sun gear from turning counterclockwise
1st & Reverse Brake (B_3)	Prevents rear planetary carrier from turning either clockwise or counterclockwise
No.1 One-Way Clutch (F_1)	When B_2 is operating, prevents front & rear planetary sun gear from turning counterclockwise
No.2 One-Way Clutch (F_2)	Prevents rear planetary carrier from turning counterclockwise

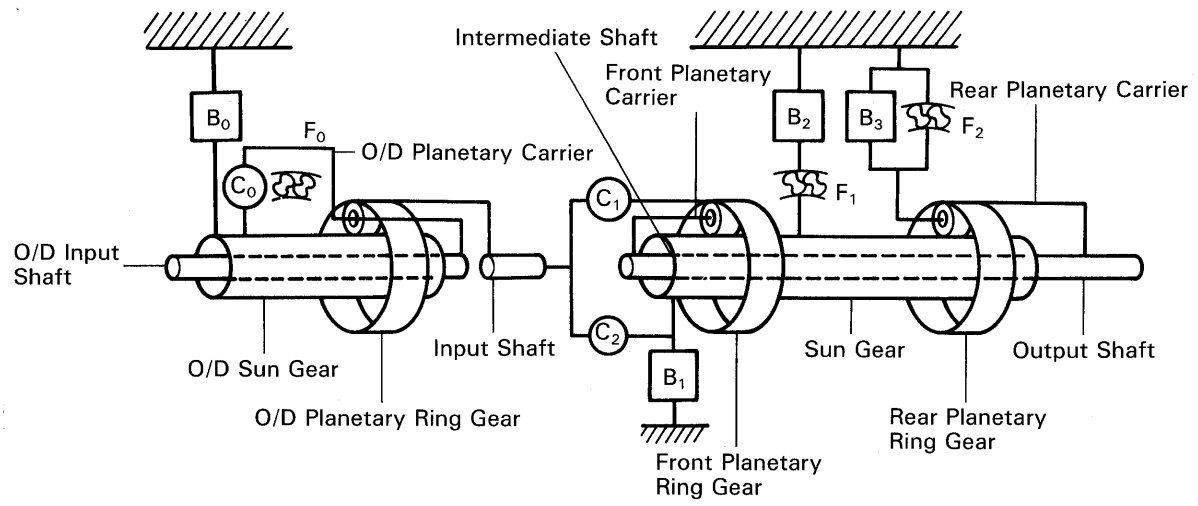

D or 2 Position 1st Gear

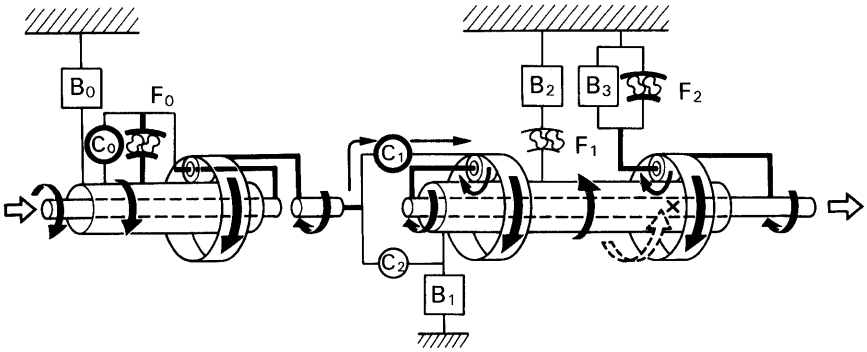

AT6675

D Position 2nd Gear

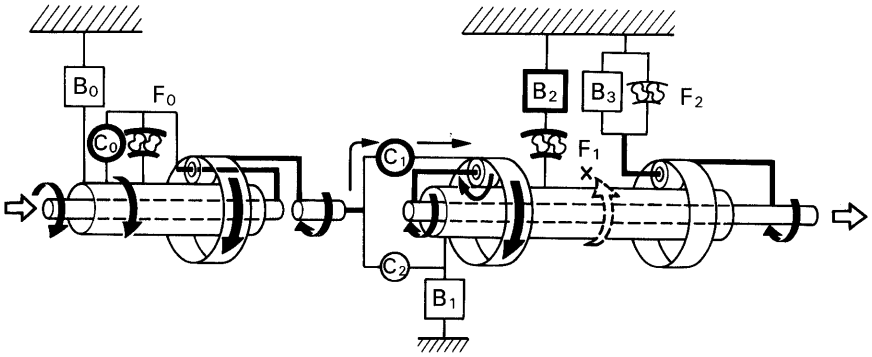

AT6676

D or 2 Position 3rd Gear

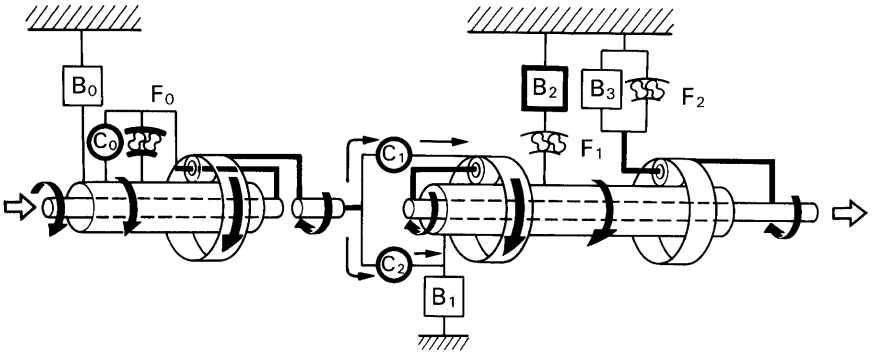

AT6677

D Position O/D

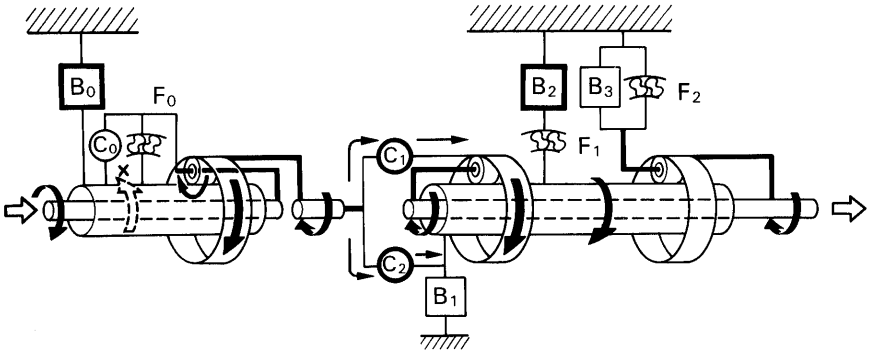

AT6678

2 or L Position 2nd Gear

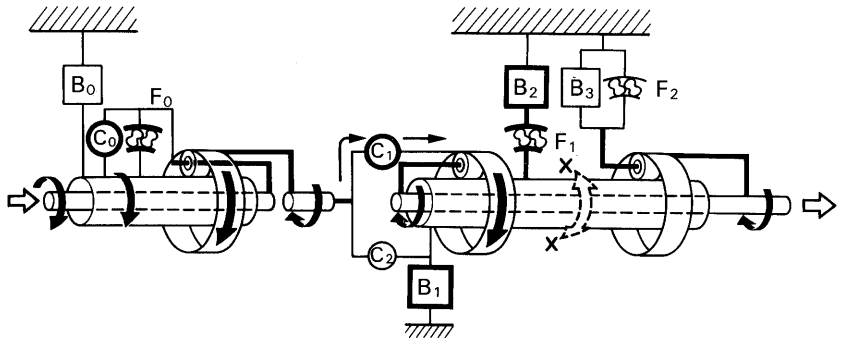

AT6679

L Position 1st Gear

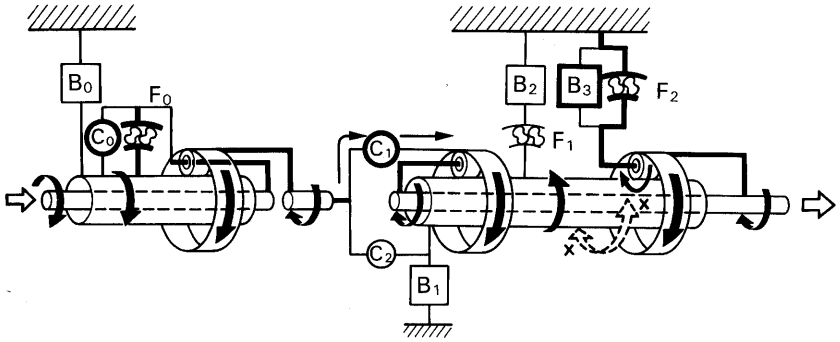

AT6680

R Position Reverse Gear

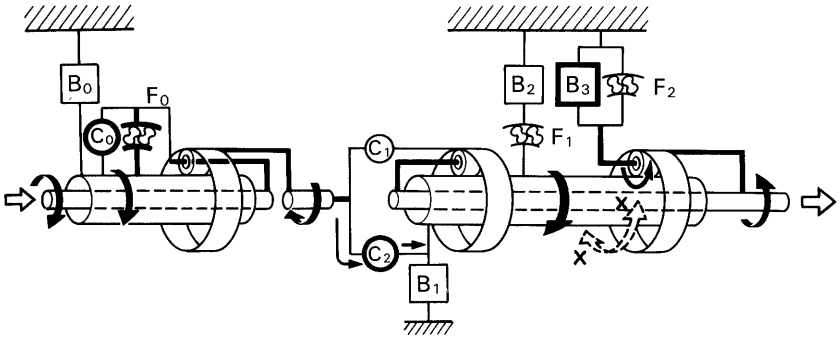

AT6681

V02111

3. HYDRAULIC CONTROL SYSTEM

The hydraulic control system is composed of the oil pump, the valve body, the solenoid valves, the accumulators, the clutches and brakes, as well as the fluid passages which connect all of these components. Based on the hydraulic pressure created by the oil pump, the hydraulic control system governs the hydraulic pressure acting on the torque converter clutch, clutches and brakes in accordance with the vehicle driving conditions.

There are 5 solenoid valves on the valve body.

The No.1 and No.2 solenoid valves are turned on and off by signals from the ECM to control the shift valves, and change the gear shift position.

The No.3 solenoid valve is operated by signals from the ECM to engage or disengage the lock-up clutch of the torque converter clutch.

The No.4 solenoid valve is operated by signals from the ECM to control the engagement speed and reduce gear shift shock.

The No.5 solenoid valve is operated by signals from the ECM to regulate the line pressure to throttle pressure.

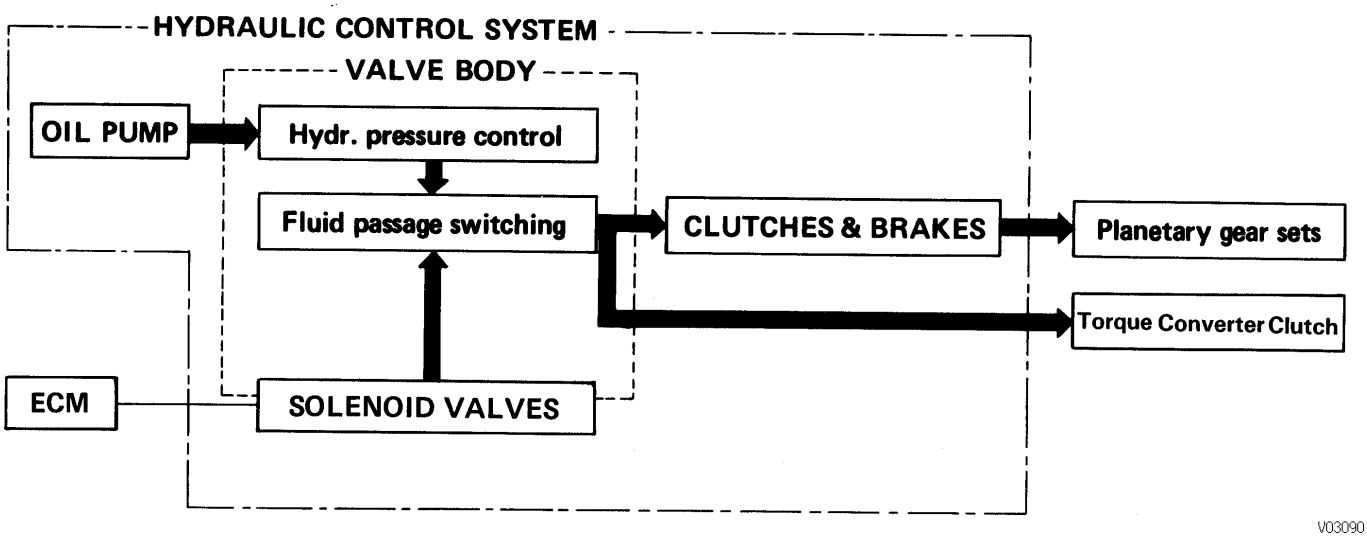

4. ELECTRONIC CONTROL SYSTEM

The electronic control system for the A340E automatic transmission provides extremely precise control of the gear shift timing and lock-up timing in response to driving conditions as sensed by various sensors located throughout the vehicle and in response to the engine's running condition.

In addition, the ECM control reduces vehicle squat when the shift lever is moved from N to D.

The electronic control system is also equipped with a self diagnosis system which diagnoses malfunctions for the vehicle to continue functioning when a malfunction occurs.

CONSTRUCTION

The electronic control system can be broadly divided onto three groups; the sensors, ECM and actuators.

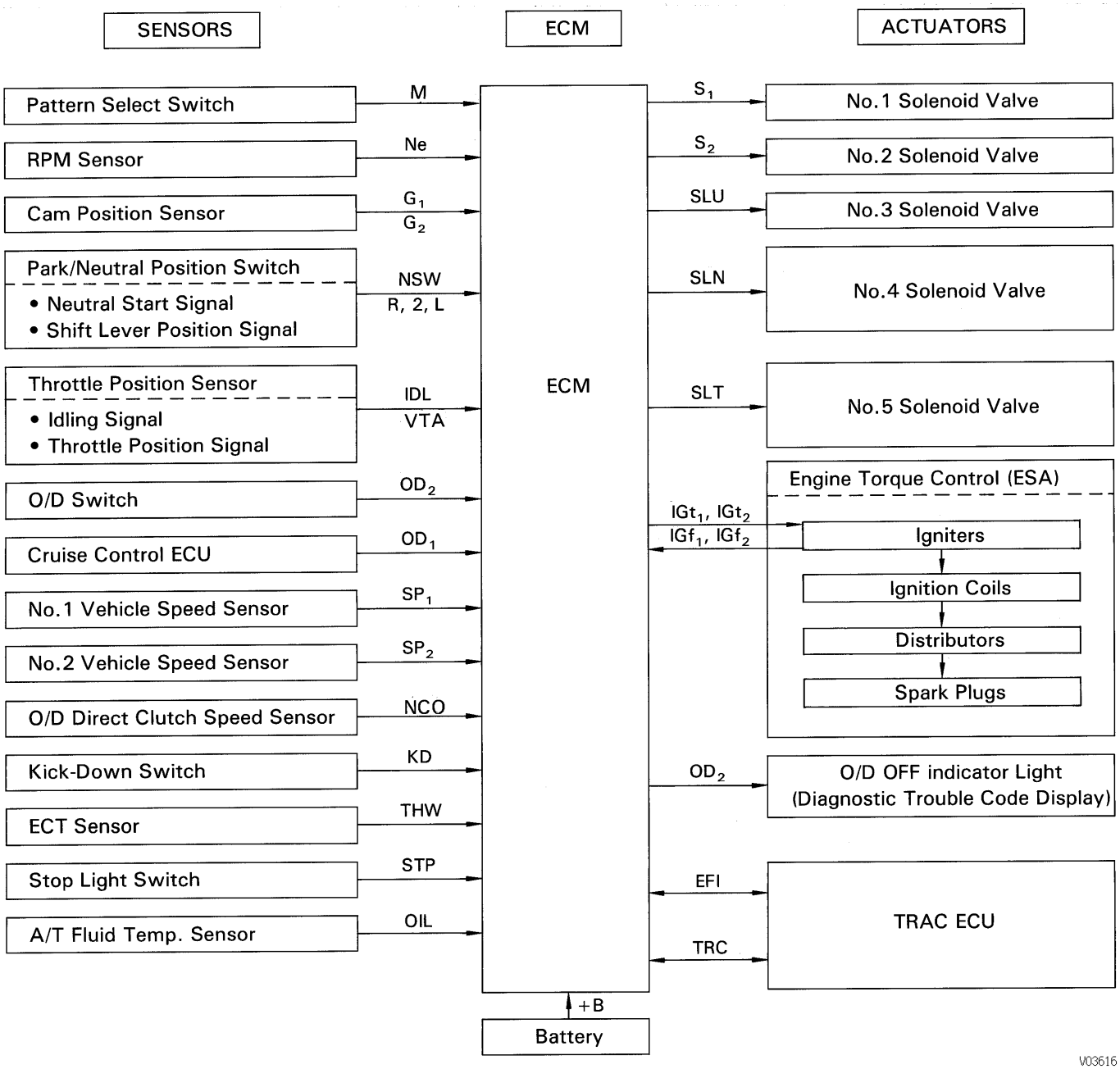

COMPONENT PARTS REMOVAL

AT0DB-02

COMPONENTS

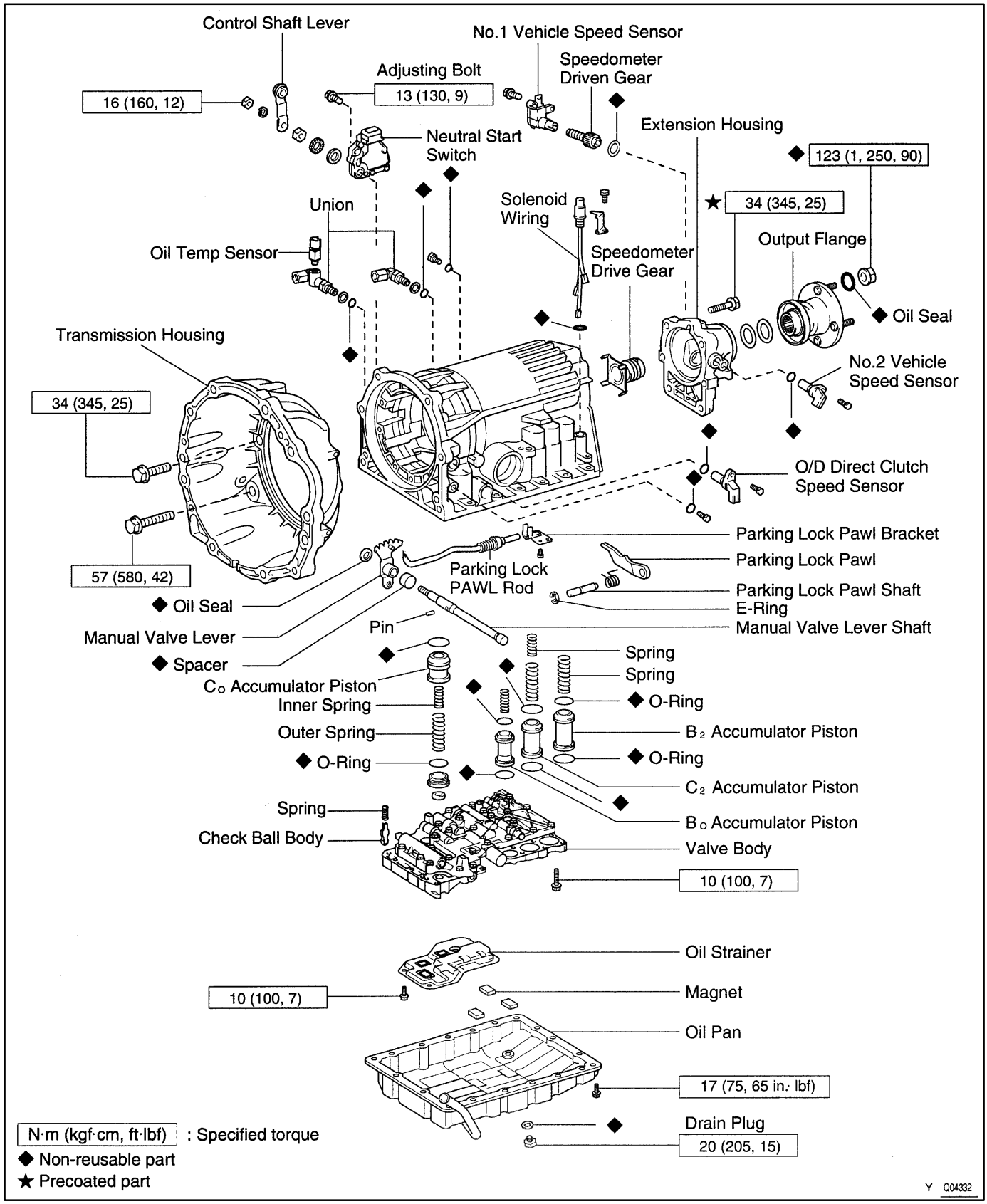

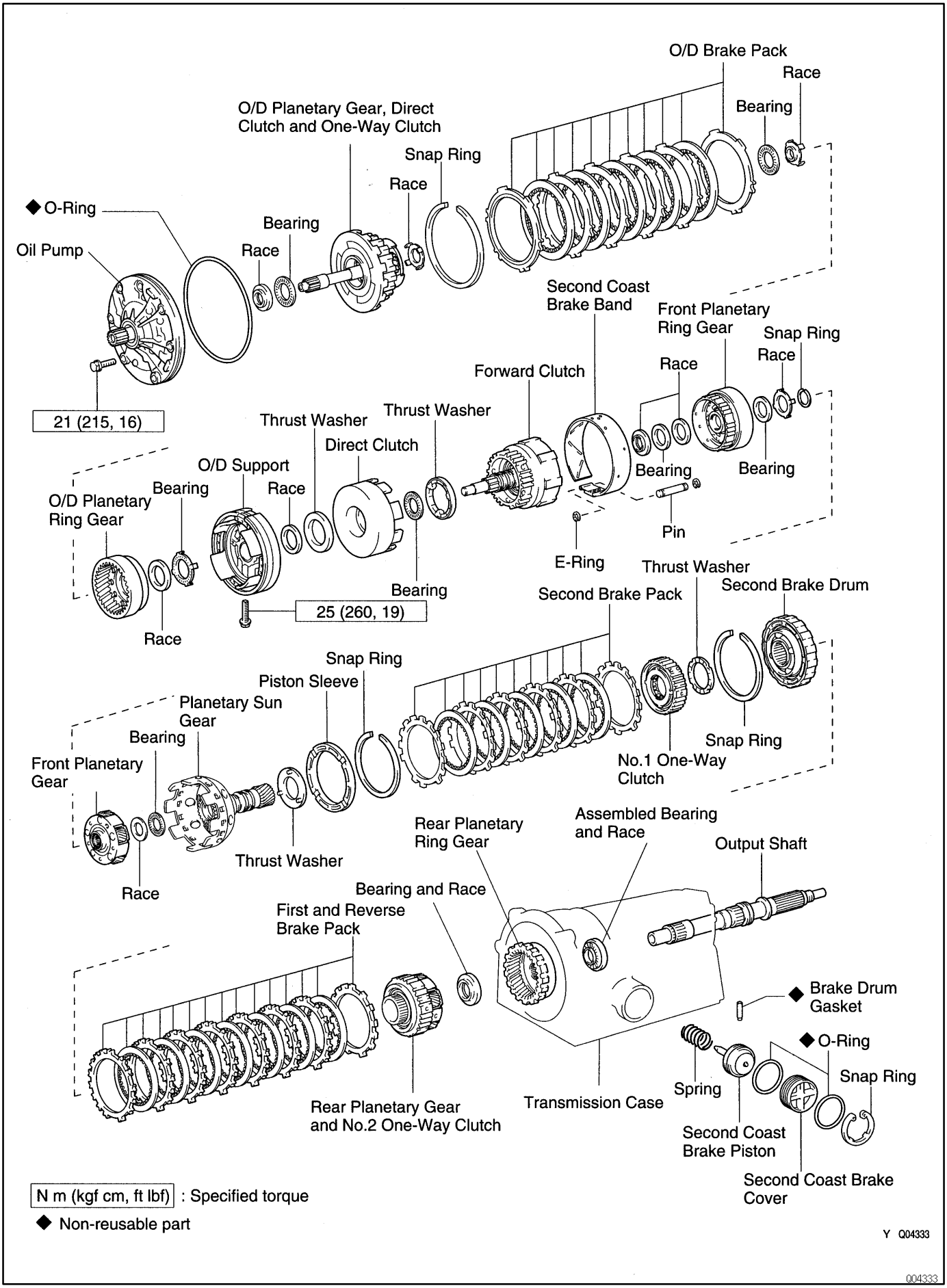
O/D Brake Pack
Race
Bearing
O/D Planetary Gear, Direct Clutch and One-Way Clutch
Snap Ring
Race
◆ O-Ring
Bearing
Race
Oil Pump
Second Coast Brake Band
Front Planetary Ring Gear
Snap Ring
Race
Race
Forward Clutch
21 (215, 16)
Thrust Washer
Thrust Washer
Direct Clutch
O/D Support
Bearing
Race
O/D Planetary Ring Gear
Bearing
Bearing
Pin
E-Ring
Thrust Washer
Second Brake Drum
Second Brake Pack
Bearing
25 (260, 19)
Race
Snap Ring
Piston Sleeve
Planetary Sun Gear
Bearing
Front Planetary Gear
Snap Ring
No.1 One-Way Clutch
Thrust Washer
Race
Rear Planetary Ring Gear
Assembled Bearing and Race
Output Shaft
Bearing and Race
First and Reverse Brake Pack
◆ Brake Drum Gasket
◆ O-Ring
Snap Ring
Spring
Rear Planetary Gear and No.2 One-Way Clutch
Transmission Case
Second Coast Brake Piston
Second Coast Brake Cover
N m (kgf cm, ft lbf) : Specified torque
◆ Non-reusable part
Y Q04333
Q04333

AT0DC-05

TRANSMISSION DISASSEMBLY

1. REMOVE CONTROL SHAFT LEVER

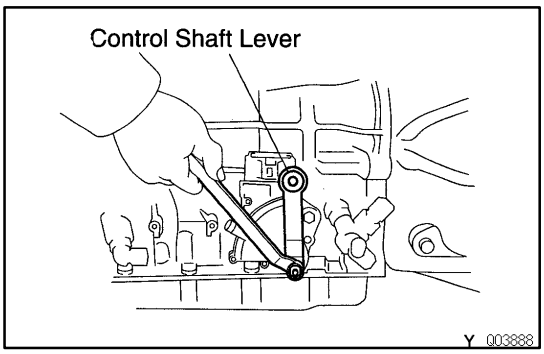

2. REMOVE PARK/NEUTRAL POSITION SWITCH

(a) Unstake the lock washer.
(b) Remove the nut and bolt.

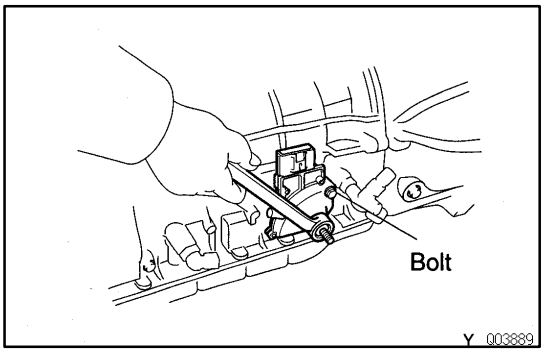

(c) Remove the park/neutral position switch.

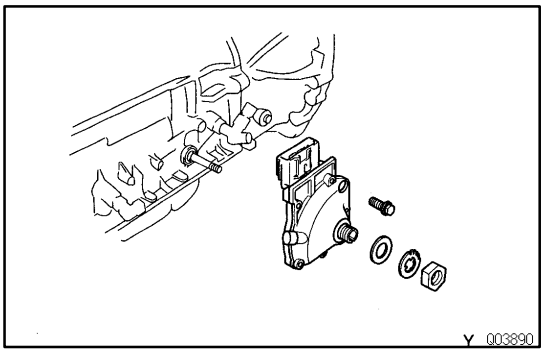

3. REMOVE OIL TEMPERATURE SENSOR

(a) Remove the oil temperature sensor.
(b) Remove the O-ring from the sensor.

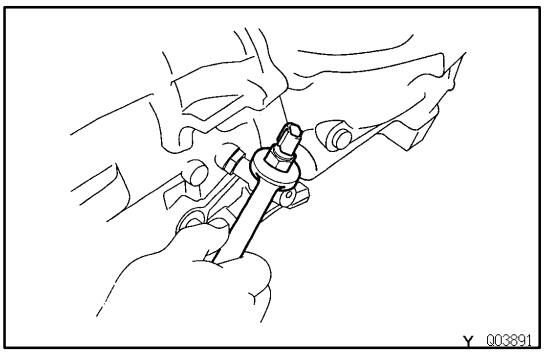

4. REMOVE UNIONS

(a) Remove the 2 unions.
(b) Remove the O-ring from both unions.

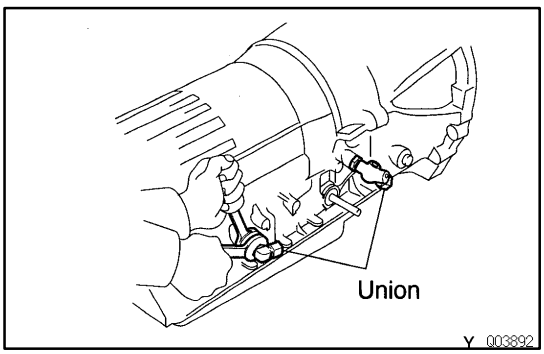

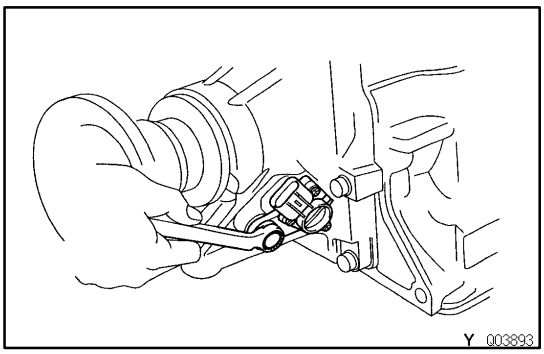

5. REMOVE NO.1 VEHICLE SPEED SENSOR

(a) Remove the No.1 vehicle speed sensor.
(b) Remove the O-ring from the sensor.

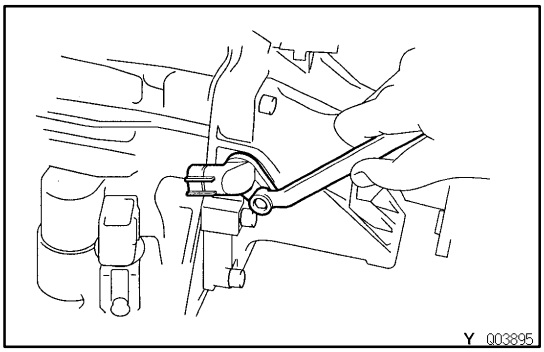

6. REMOVE NO.2 VEHICLE SPEED SENSOR

(a) Remove the No.2 vehicle speed sensor.
(b) Remove the O-ring from the sensor.

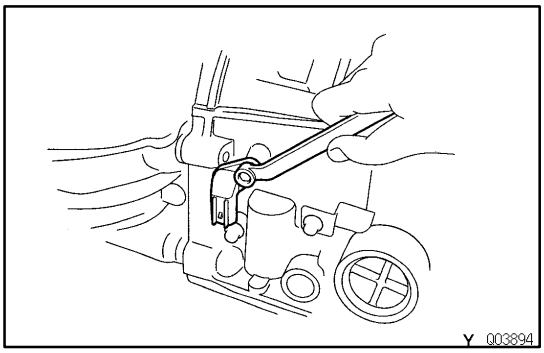

7. REMOVE O/D DIRECT CLUTCH SPEED SENSOR

(a) Remove the O/D direct clutch speed sensor.
(b) Remove the O-ring from the sensor.

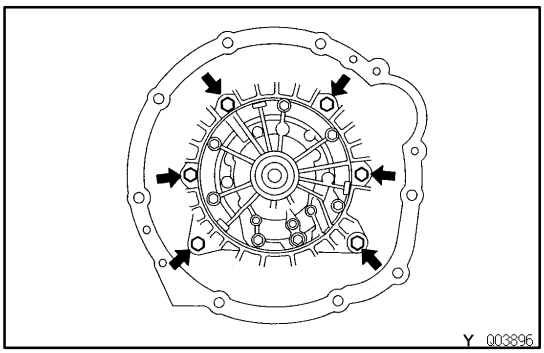

8. REMOVE TRANSMISSION HOUSING

(a) Remove the 6 bolts.
(b) Remove the transmission housing.

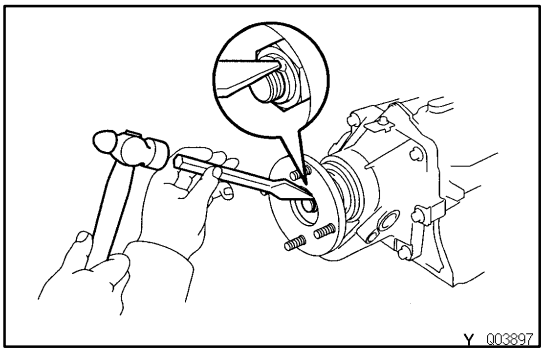

9. REMOVE TRANSMISSION OUTPUT FLANGE

(a) Using a hammer and a chisel, loosen the staked part of the nut.
HINT: Shift the manual valve lever to the P position.

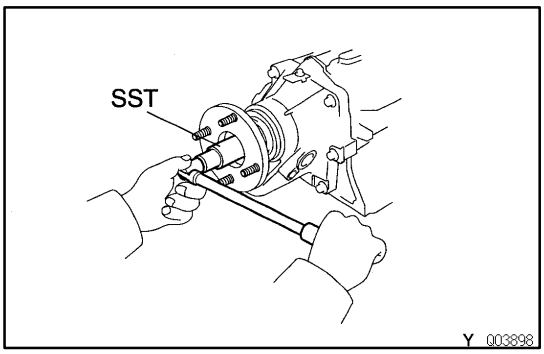

(b) Using SST, remove the nut.
SST 09060-20100

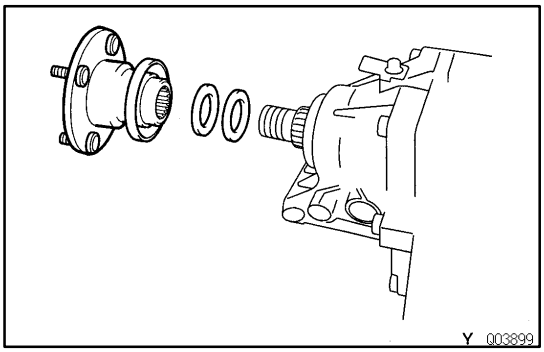

(c) Remove the output flange and 2 washers.

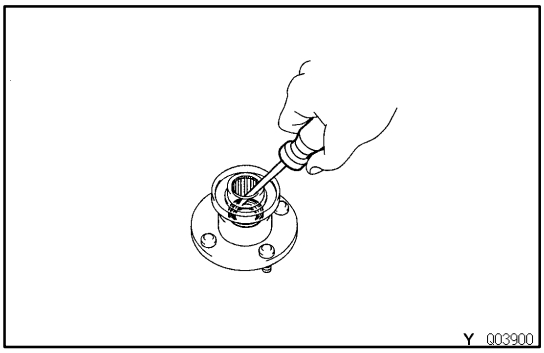

(d) Remove the oil seal from the output flange.

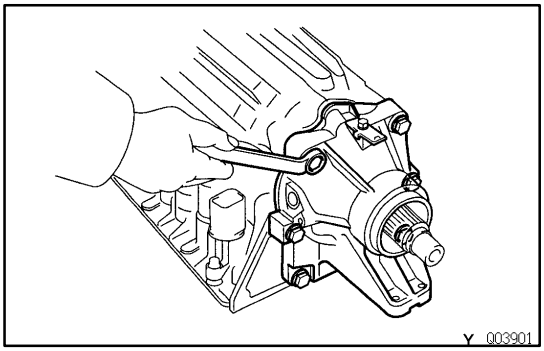

10. REMOVE EXTENSION HOUSING

(a) Remove the 6 bolts.

(b) Using a brass bar and a hammer, remove the extension housing.

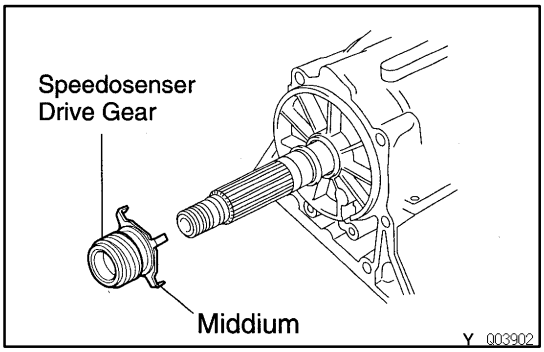

11. REMOVE SPEEDOMETER DRIVE GEAR AND SENSOR ROTOR

Remove the speedometer drive gear and sensor rotor from the output shaft.

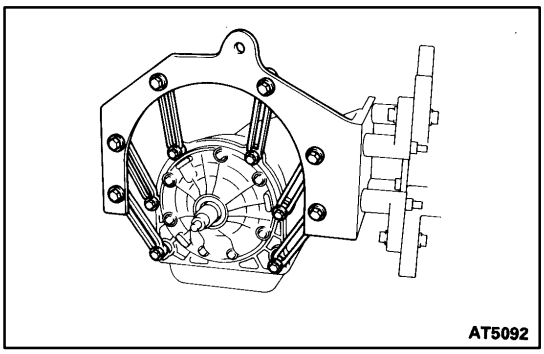

12. INSTALL TRANSMISSION CASE

Install the transmission case on the overhaul attachment.

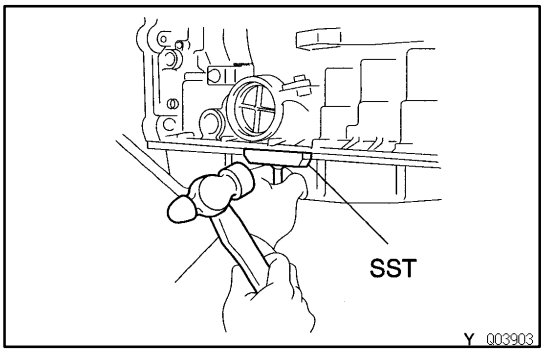

13. REMOVE OIL PAN

NOTICE: Do not turn the transmission over as this will contaminate the valve body with any foreign matter at the bottom of the pan.

(a) Remove the 19 bolts.

(b) Insert the blade of SST between the transmission case and oil pan, cut off applied sealer.

SST 09032-00100

NOTICE: Be careful not to damage the oil pan flange.

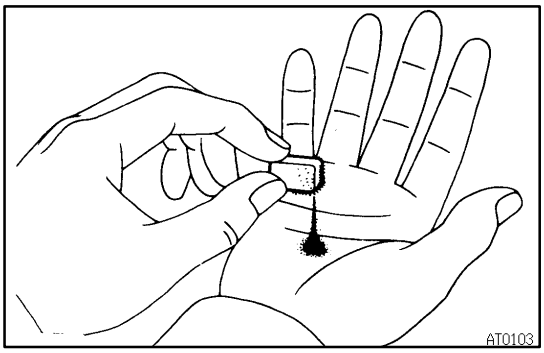

14. EXAMINE PARTICLES IN PAN

Remove the magnets and use them to collect steel particles.

Carefully lock at the foreign matter and particles in the pan and on the magnets to anticipate the type of wear you will find in the transmission:

★ Steel (magnetic): bearing, gear and clutch plate wear

★ Brass (non-magnetic): bushing wear

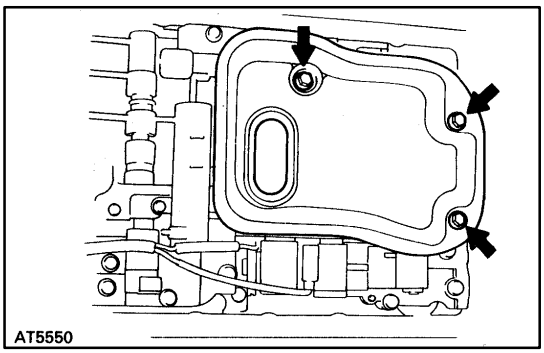

15. REMOVE OIL STRAINER

(a) Turn over the transmission.

(b) Remove the 3 bolts holding the oil strainer to the valve body.

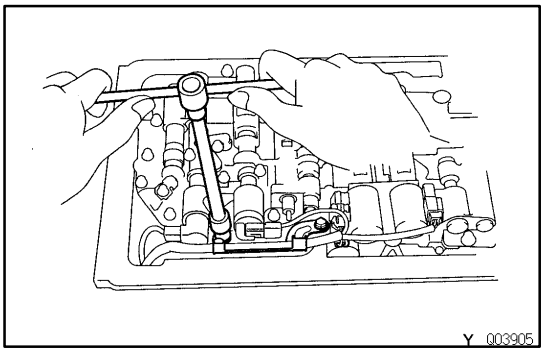

16. REMOVE SOLENOID WIRING

(a) Remove the 2 bolts and the clamp.

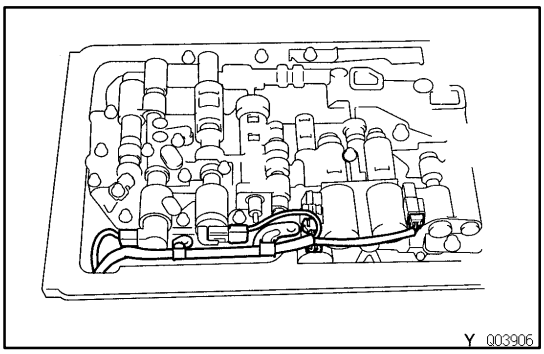

(b) Disconnect the 5 connectors from the solenoids.

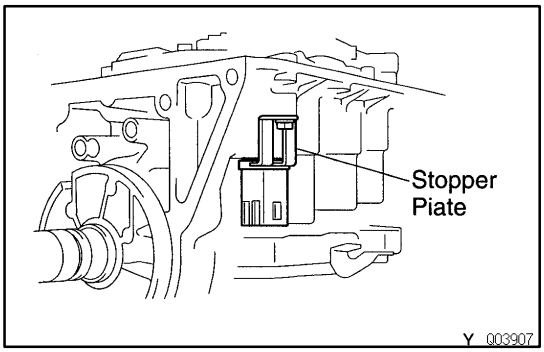

(c) Remove the stopper plate from the case.
(d) Pull the wiring out of the transmission case.
(e) Remove the O-ring from the grommet.

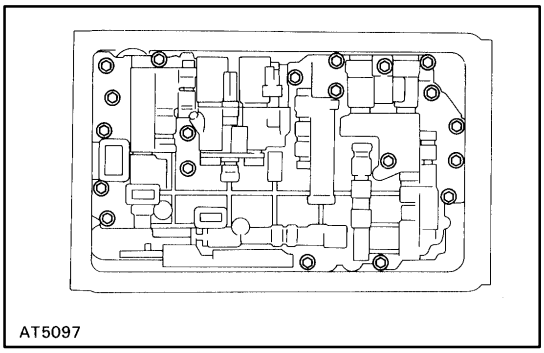

17. REMOVE VALVE BODY
(a) Remove the 20 bolts.
(b) Remove the valve body.

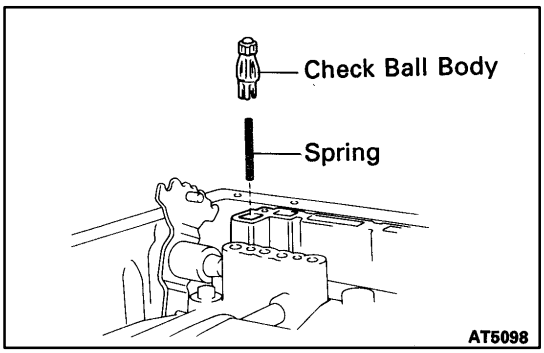

18. REMOVE CHECK BALL BODY
Remove the check ball body and spring.

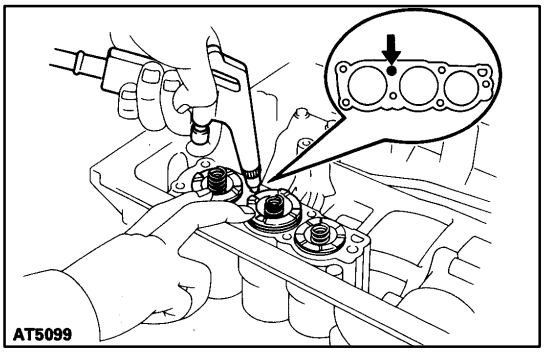

19. REMOVE ACCUMULATOR SPRINGS AND PISTONS
(a) Applying compressed air to the oil hole, remove the B_2 and C_2 accumulator pistons and 3 springs.
(b) Remove the O-rings from each piston.

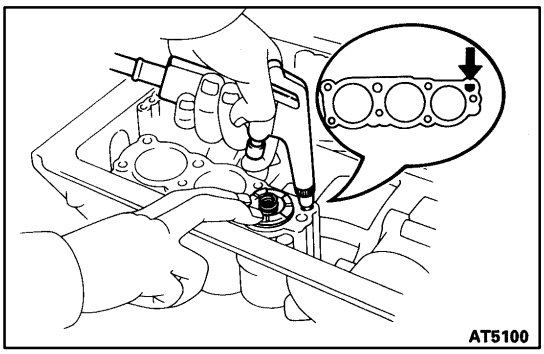

(c) Applying compressed air to the oil hole, remove the B_0 accumulator piston and spring.
(d) Remove the O-rings from the piston.
NOTICE: Take care as the C_0 accumulator piston may jump out.

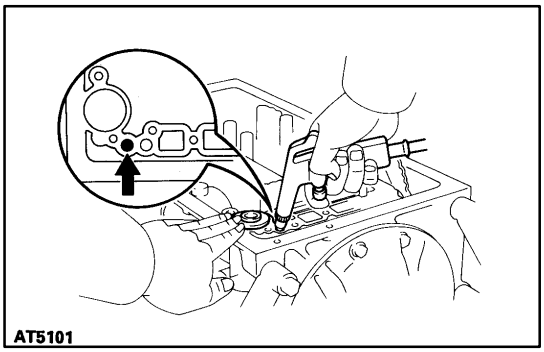

(e) Applying compressed air to the oil hole, remove the C_0 accumulator piston and spring.
HINT: The C_0 accumulator piston comes in 2 parts, so if only the top part is removed, after removing the spring reapply compressed air.
(f) Remove the O-ring from the piston.

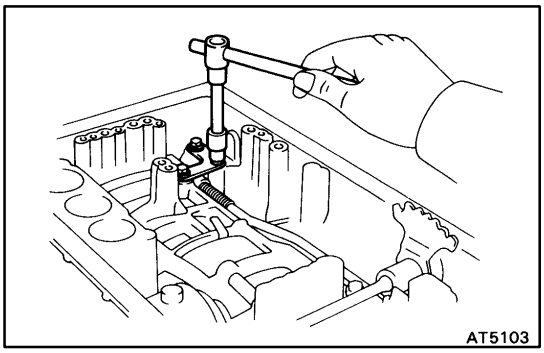

20. REMOVE PARKING LOCK ROD AND PAWL
(a) Remove the parking lock pawl bracket.

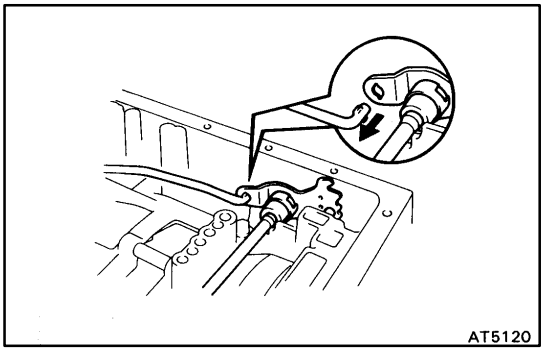

(b) Disconnect the parking lock rod from the manual valve lever.

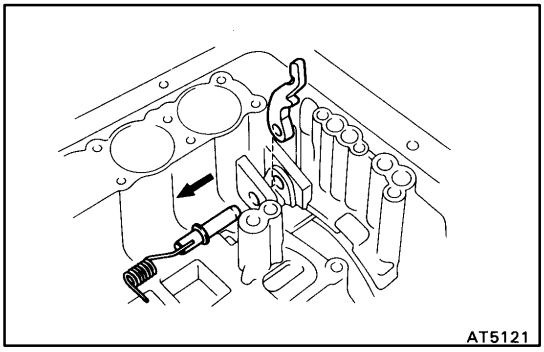

(c) Pull the parking lock pawl shaft out from the front side, then remove the pawl and spring.
(d) Remove the E-ring from the shaft.

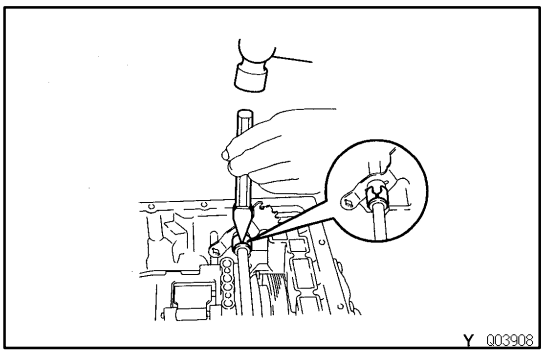

21. REMOVE MANUAL VALVE LEVER SHAFT

(a) Using a hammer and a chisel, cut off the spacer and remove it from the shaft.

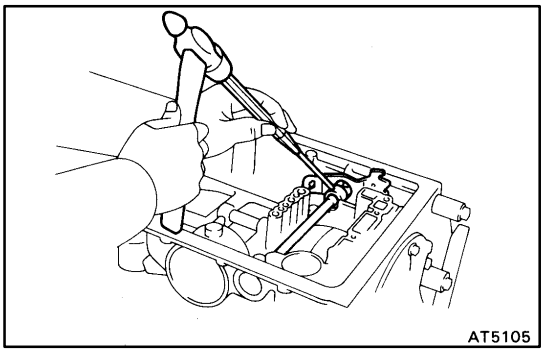

(b) Using a pin punch, drive out the spring pin.
HINT: Slowly drive out the spring pin so it does not fall into the transmission case.

(c) Pull the manual valve lever shaft out through the case and remove the manual valve lever.

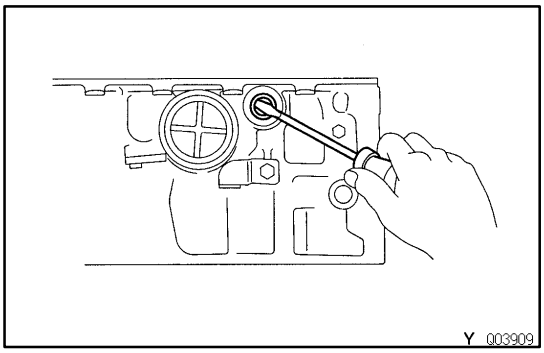

(d) Using a screwdriver, remove the oil seal.

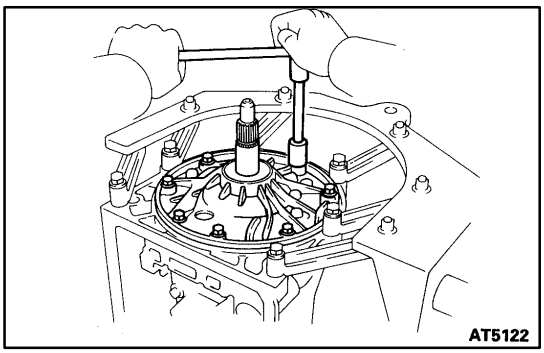

22. REMOVE OIL PUMP

(a) Remove the 7 bolts holding the oil pump to the transmission case.

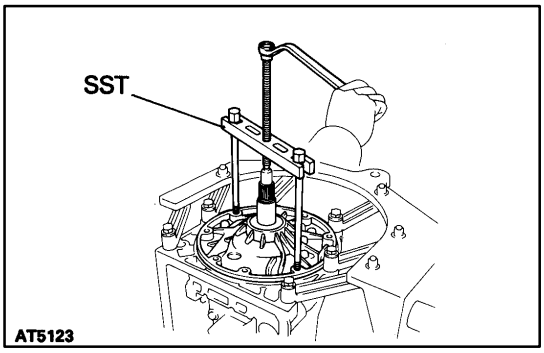

(b) Using SST, remove the oil pump.
SST 09350-30020 (09350-07020)

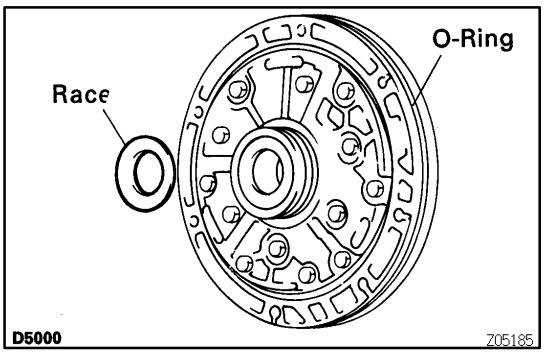

(c) Remove the race from the oil pump.
(d) Remove the O-ring from the oil pump.

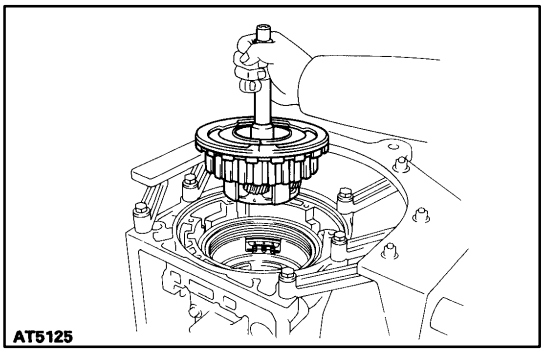

23. REMOVE OVERDRIVE PLANETARY GEAR WITH OVERDRIVE DIRECT CLUTCH

(a) Remove the overdrive planetary gear with the overdrive direct clutch from the transmission case.

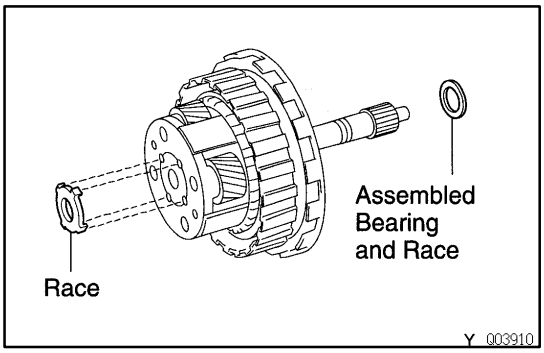

(b) Remove the race and assembled bearing and race.

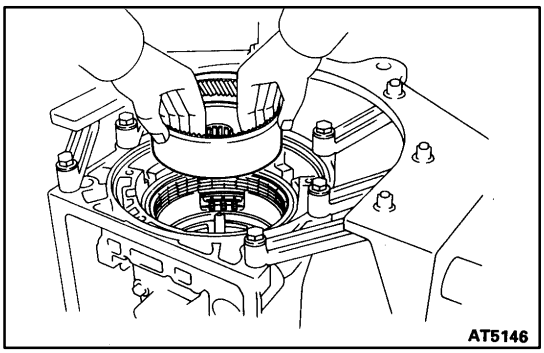

24. REMOVE OVERDRIVE PLANETARY RING GEAR

(a) Remove the overdrive planetary ring gear from the transmission case.

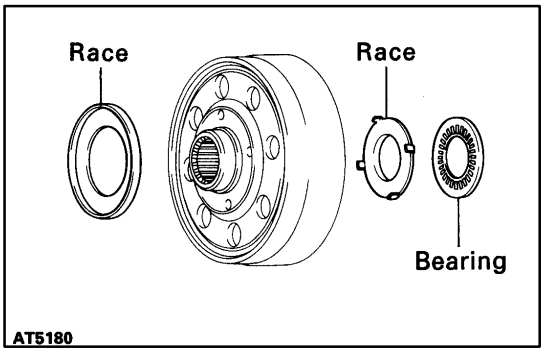

(b) Remove the bearing and races from the planetary ring gear.

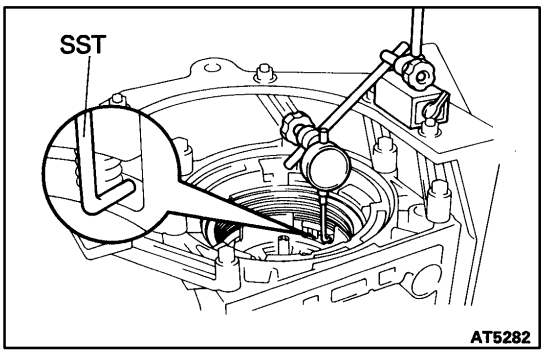

25. CHECK PISTON STROKE OF OVERDRIVE BRAKE

(a) Place SST and dial indicator onto the overdrive brake piston.
SST 09350-30020 (09350-06120)

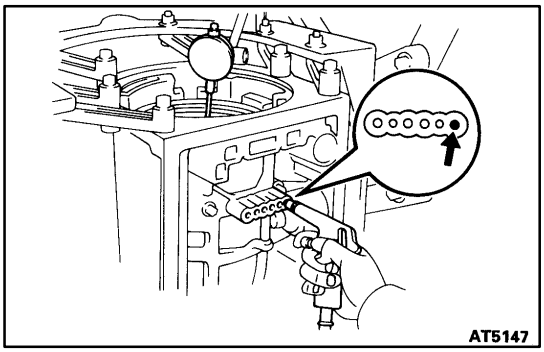

(b) Measure the stroke while applying and releasing compressed air (392-785 kPa, 4-8 kgf/cm^2 or 57-114 psi).
Piston stroke:
1.75-2.05 mm (0.0689-0.0807 in.)
If the values are non-standard, inspect the discs.

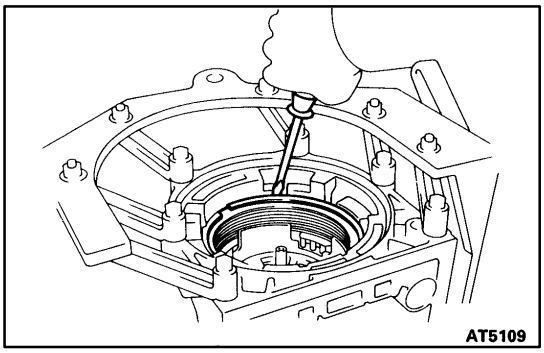

26. REMOVE FLANGES, PLATES AND DISCS OF OVERDRIVE BRAKE

(a) Remove the snap ring.

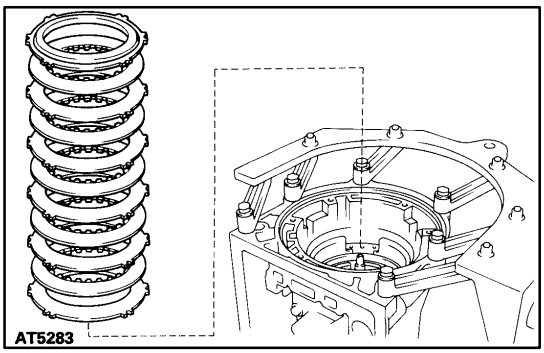

(b) Remove the flange, 5 plates and 5 discs.

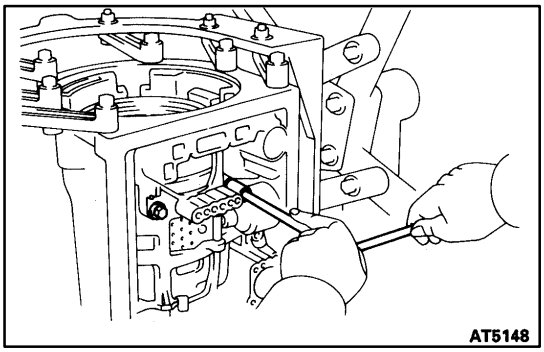

27. REMOVE OVERDRIVE SUPPORT ASSEMBLY

(a) Remove the 2 bolts holding the overdrive support assembly to the case.

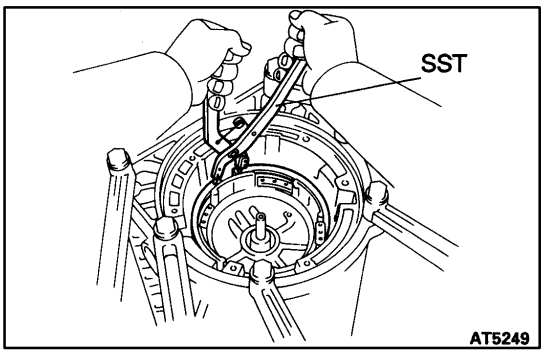

(b) Using SST, remove the snap ring.
SST 09350-30020 (09350-07060)

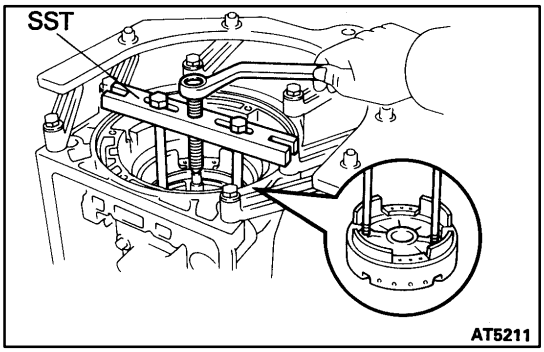

(c) Using SST, remove the overdrive support assembly.
SST 09350-30020 (09350-07020)

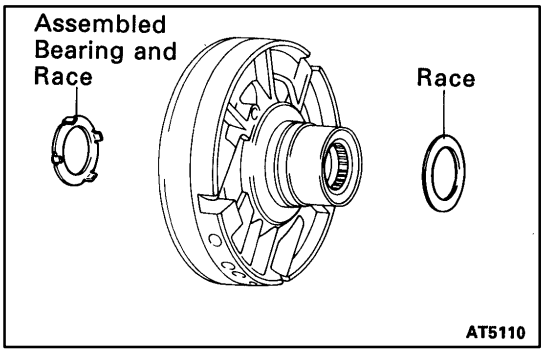

(d) Remove the assembled bearing and races from the overdrive support.

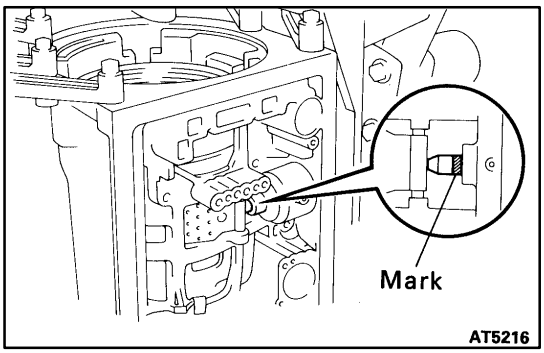

28. CHECK PISTON ROD STROKE OF SECOND COAST BRAKE

(a) Using a waterproof pen, place a mark on the second coast brake piston rod.

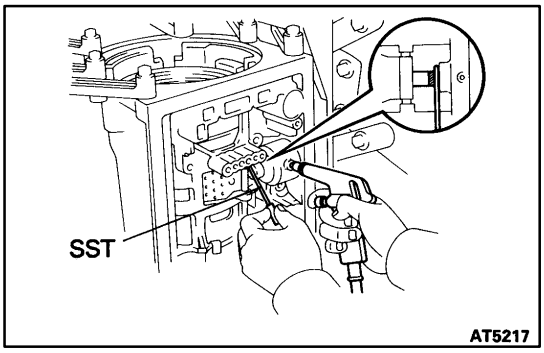

(b) Using SST, measure the stroke while applying and releasing compressed air (392-784 kPa, 4-8 kgf/cm^2 or 57-114 psi).
SST 09240-00020
Piston rod stroke:
1.0 - 2.0 mm (0.039 - 0.079 in.)
If the values are non-standard, inspect the brake band.

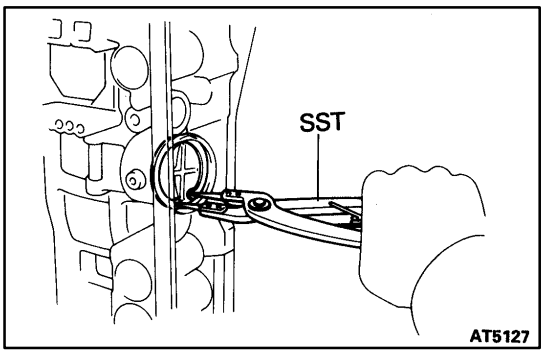

29. REMOVE SECOND COAST BRAKE COVER, PISTON ASSEMBLY AND SPRING

(a) Using SST, remove the snap ring.
SST 09350-30020 (09350-07060)

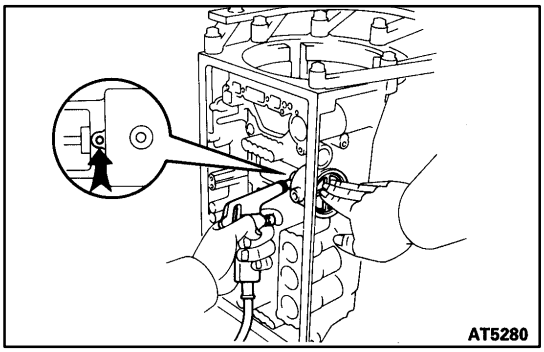

(b) Applying compressed air to the oil hole, remove the second cost brake cover, piston assembly and spring.

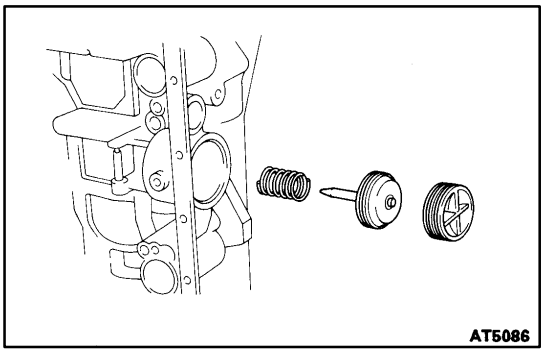

(c) Remove the 2 O-rings from the cover.

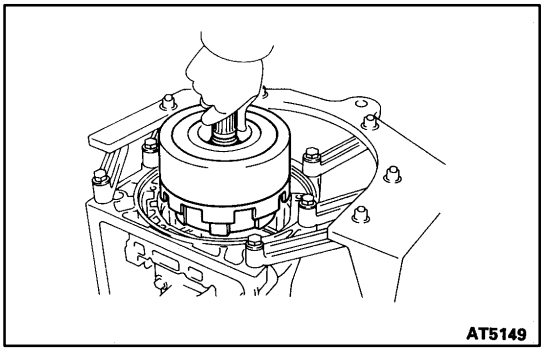

30. REMOVE DIRECT CLUTCH WITH FORWARD CLUTCH

(a) Remove the direct clutch with forward clutch from the case.

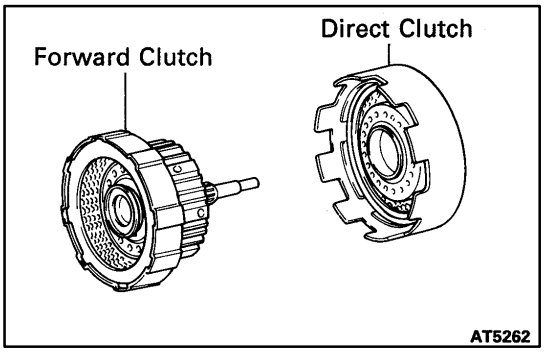

(b) Remove the direct clutch from the forward clutch.

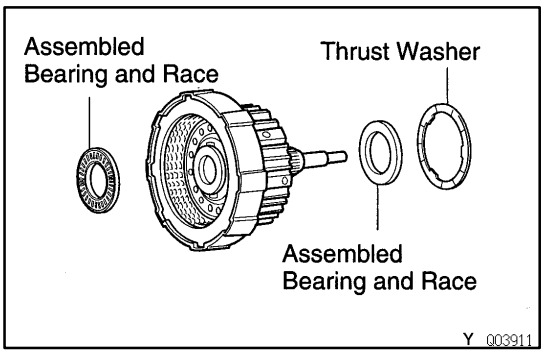

(c) Remove the assembled bearing and race, thrust washer and race from the forward clutch.

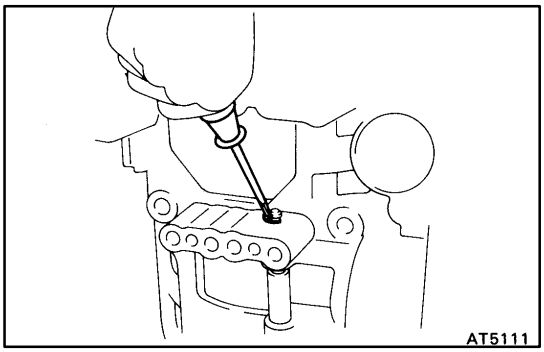

31. REMOVE SECOND COAST BRAKE BAND

(a) Remove the E-ring from the pin.

(b) Remove the pin from the brake band.

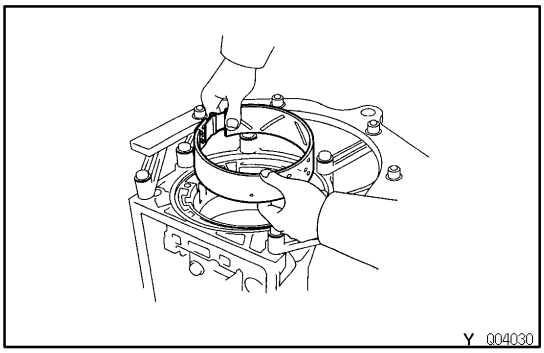

(c) Remove the second coast brake band from the case.

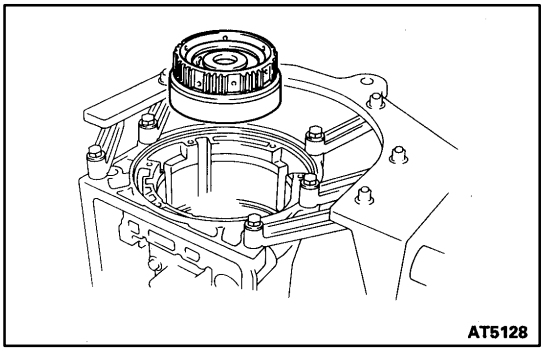

32. REMOVE FRONT PLANETARY RING GEAR

(a) Remove the front planetary ring gear from the case.

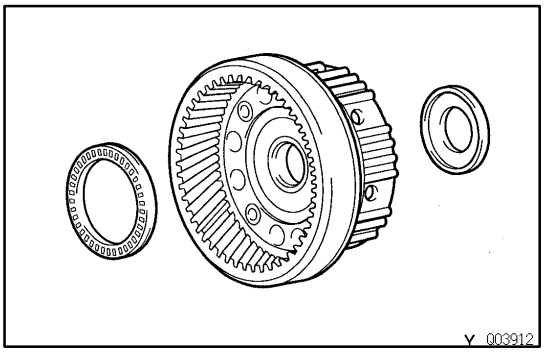

(b) Remove the bearing and race from the front planetary ring gear.

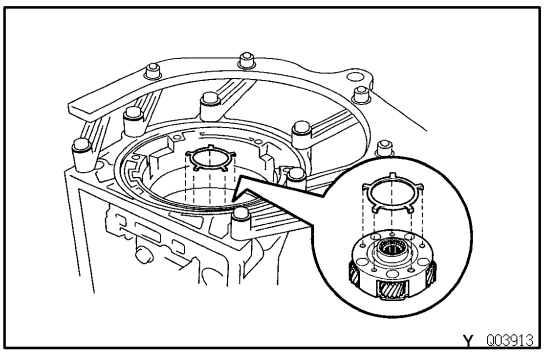

(c) Remove the race from the front planetary gear.

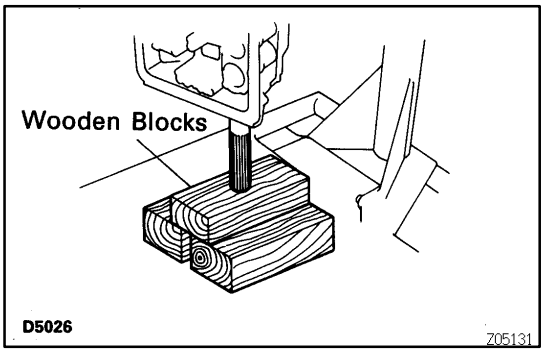

(d) With wooden blocks under the output shaft, stand the transmission on the output shaft.

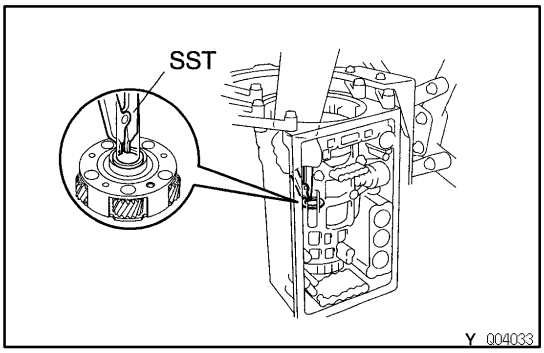

33. REMOVE OUTPUT SHAFT

(a) Using SST, remove the snap ring.
SST 09350-30020 (09350-07070)
HINT: Pushing the output shaft towards the front makes it easier to remove.

(b) Remove the output shaft from the case.

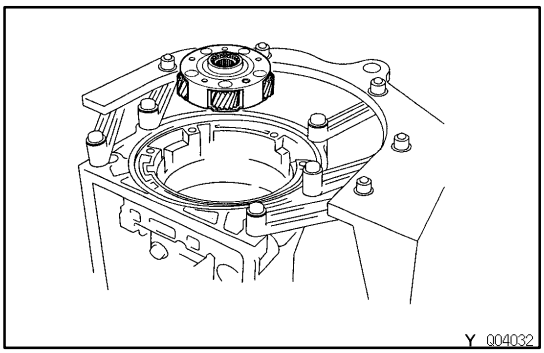

34. REMOVE FRONT PLANETARY GEAR

(a) Remove the front planetary gear from the case.

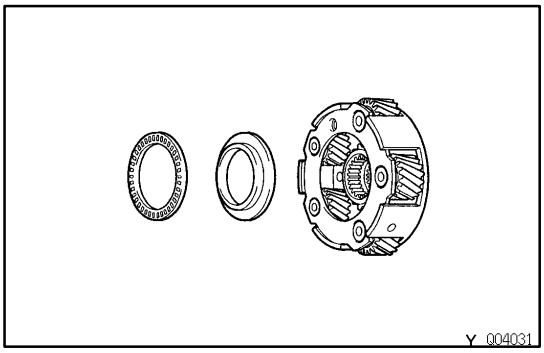

(b) Remove the bearing and race from the front planetary gear.

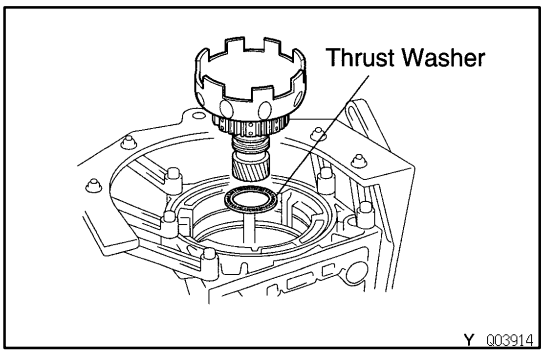

35. REMOVE PLANETARY SUN GEAR WITH NO.1 ONE-WAY CLUTCH

(a) Remove the planetary sun gear with No.1 one-way clutch from the case.

(b) Remove the thrust washer.

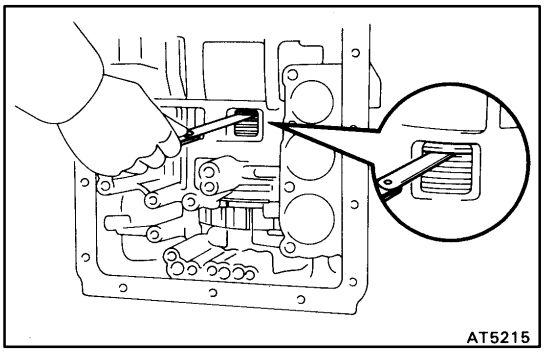

36. CHECK PACK CLEARANCE OF SECOND BRAKE

Using a feeler gauge, measure the clearance between the snap ring and flange.

Clearance:

0.49 - 1.11 mm (0.0193 - 0.0437 in.)

If the values are non-standard, inspect the discs.

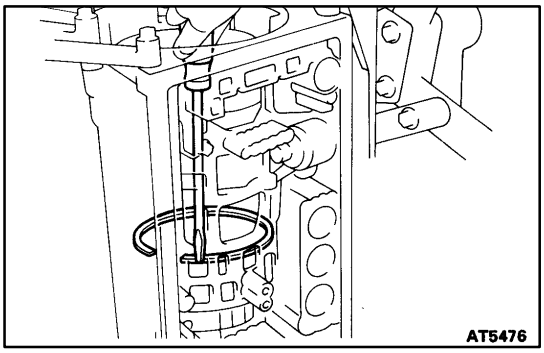

37. REMOVE FLANGE, PLATES AND DISCS OF SECOND BRAKE

(a) Remove the snap ring.

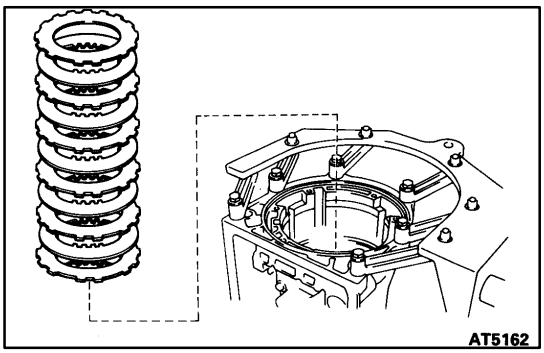

(b) Remove the flange, 5 plates and 5 discs as a set.

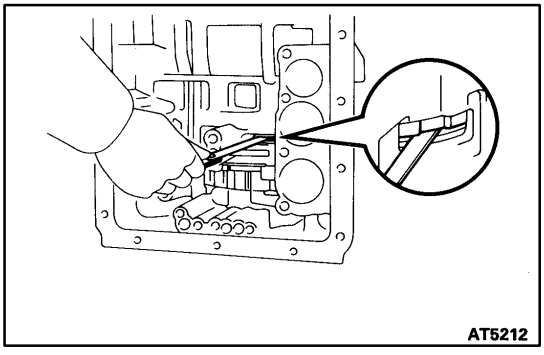

38. CHECK PACK CLEARANCE OF FIRST AND REVERSE BRAKE

Using a feeler gauge, measure the clearance between the plate and second brake drum.

Clearance:

0.7-1.0 mm (0.028-0.039 in.)

If the values are non-standard, inspect the discs.

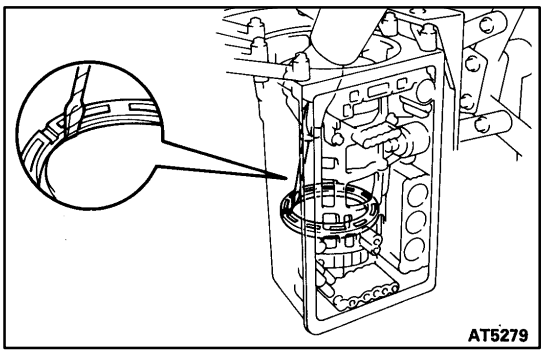

39. REMOVE SECOND BRAKE PISTON SLEEVE

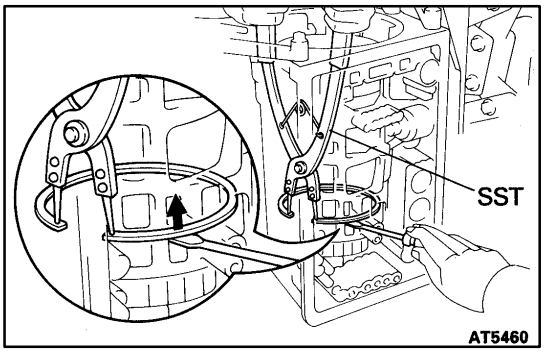

40. REMOVE REAR PLANETARY GEAR AND SECOND BRAKE

(a) Using SST and a screwdriver, remove the snap ring.
SST 09350-30020 (09350-07060)

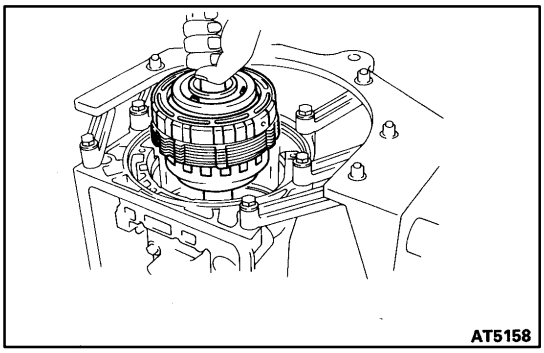

(b) Remove the output shaft.
(c) Remove the rear planetary gear, second brake and first and reverse brake pack from the case.

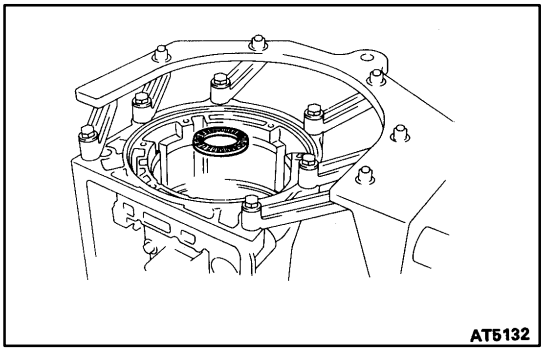

(d) Remove the assembled bearing and race from the first and reverse brake.

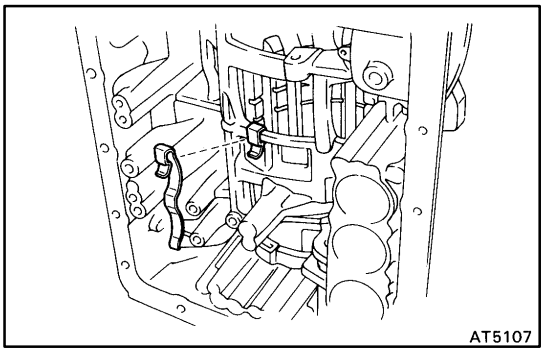

(e) Remove the leaf spirng from the case.

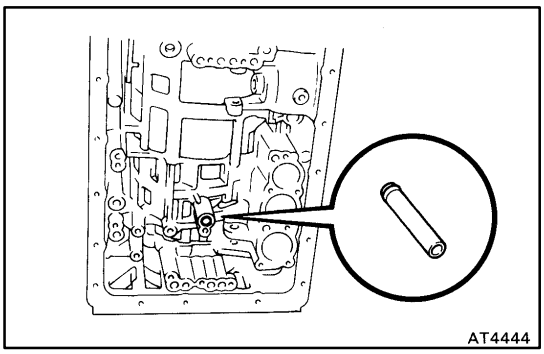

41. REMOVE BRAKE DRUM GASKET

COMPONENT PARTS

AT0DD-03

GENERAL NOTES

The instructions here are organized so that you work on only one component group at a time.

This will help avoid confusion from similar-looking parts of different subassemblies being on your workbench at the same time.

The component groups are inspected and repaired from the converter housing side.

As much as possible, complete the inspection, repair and assembly before proceeding to the next component group. If a component group cannot be assembled because parts are being ordered, be sure to keep all parts of that group in a separate container while proceeding with disassembly, inspection, repair and assembly of other component groups.

Recommended ATF:

Type T-II or equivalent

GENERAL CLEANING NOTES:

1. All disassembled parts should be washed clean and any fluid passages and holes blown through with compressed air.
2. When using compressed air to dry parts, always aim away from yourself to prevent accidentally spraying automatic transmission fluid or kerosene on your face.
3. The recommended automatic transmission fluid or kerosene should be used for cleaning.

PARTS ARRANGEMENT:

1. After cleaning, the parts should be arranged in the correct order to allow efficient inspection, repairs, and reassembly.
2. When disassembling a valve body, be sure to keep each valve together with the corresponding spring.
3. New discs for the brakes and clutches that are to be used for replacement must be soaked in transmission fluid for at least 15 minutes before assembly.

GENERAL ASSEMBLY:

1. All oil seal rings, clutch discs, clutch plates, rotating parts, and sliding surfaces should be coated with transmission fluid prior to reassembly.
2. All gaskets and rubber O-rings should be replaced.
3. Make sure that the ends of a snap ring are not aligned with one of the cutouts and are installed in the groove correctly.
4. If a worn bushing is to be replaced, the subassembly containing that bushing must also be replaced.
5. Check thrust bearings and races for wear or damage. Replace if necessary.
6. Use petroleum jelly to keep parts in place.

OIL PUMP
COMPONENTS

AT0DE-02

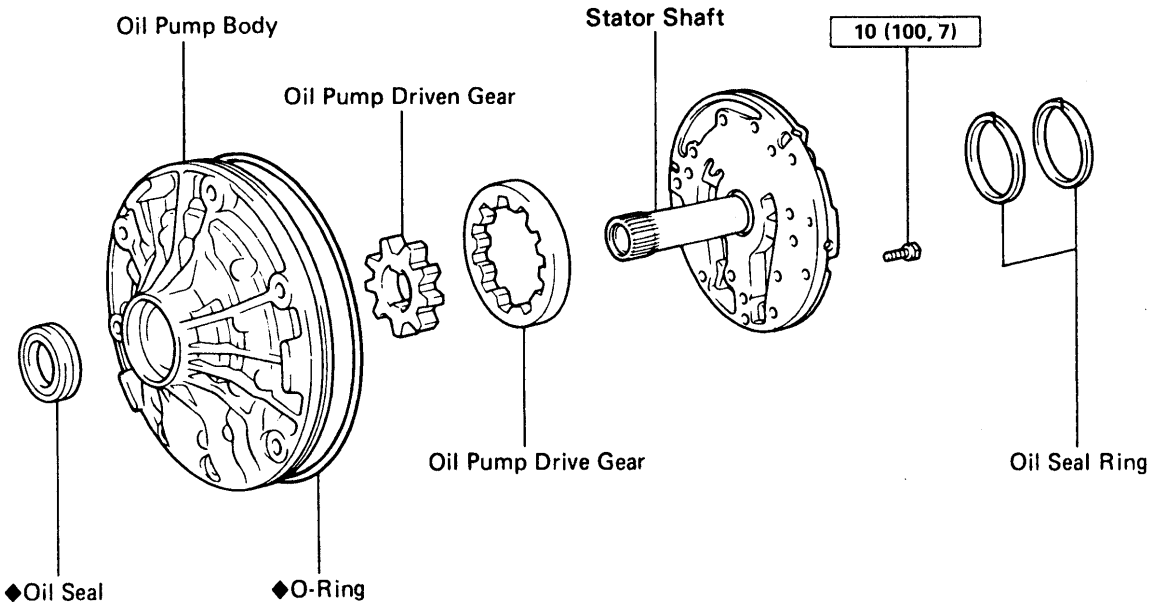

N·m (kgf·cm, ft·lbf) : Specified torque
◆ Non-reusable part

AT5461

AT0DF-05

OIL PUMP DISASSEMBLY

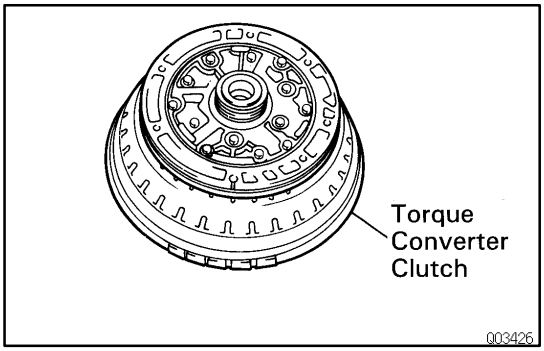

Q03426

1. USE TORQUE CONVERTER CLUTCH AS WORK STAND

Place the oil pump body on the torque converter clutch.

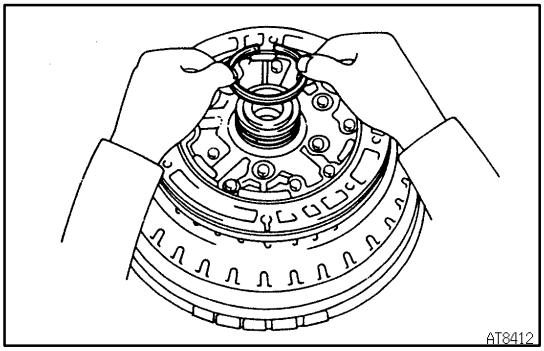

AT8412

2. REMOVE OIL SEAL RINGS

Remove the 2 oil seal rings.

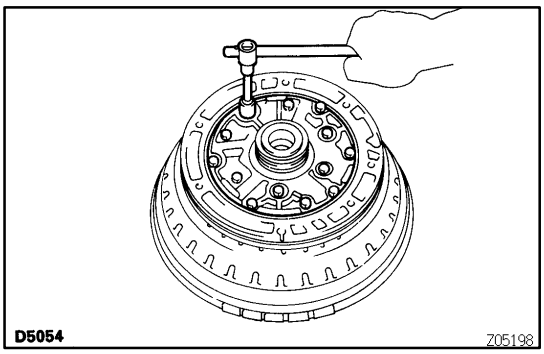

3. REMOVE STATOR SHAFT

(a) Remove the 13 bolts, and then remove the stator shaft from the oil pump body.

(b) Remove the oil pump body from the torque converter clutch.

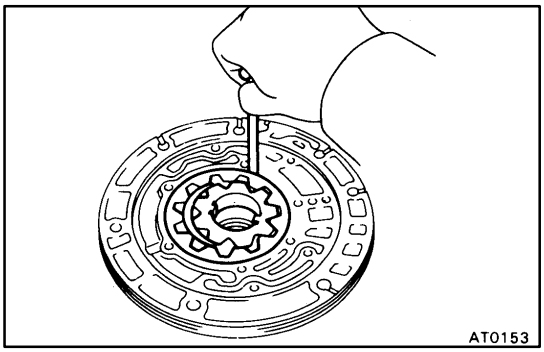

4. CHECK BODY CLEARANCE OF DRIVEN GEAR

Push the driven gear to one side of the body.

Using a feeler gauge, measure the clearance.

Standard body clearance:

0.07-0.15 mm (0.0028-0.0059 in.)

Maximum body clearance:

0.3 mm (0.012 in.)

If the body clearance is greater than the maximum, replace the drive gear, driven gear or pump body.

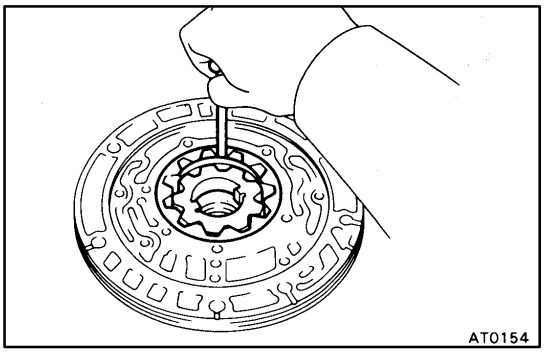

5. CHECK TIP CLEARANCE OF DRIVEN GEAR

Measure between the driven gear teeth and the crescet-shaped part of the pump body.

Standard tip clearance:

0.11-0.14 mm (0.0043-0.0055 in.)

Maximum tip clearance:

0.3 mm (0.012 in.)

If the tip clearance is greater than the maximum, replace the drive gear, driven gear or pump body.

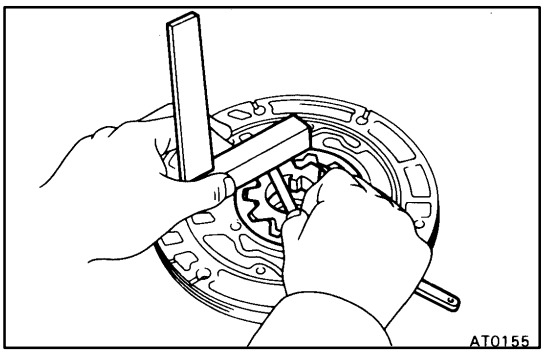

6. CHECK SIDE CLEARANCE OF BOTH GEARS

Using a steel straight edge and a feeler gauge, measure the side clearance of both gears.

Standard side clearance:

0.02-0.05 mm (0.0008-0.0020 in.)

Maximum side clearance:

0.1 mm (0.004 in.)

If the side clearance is greater than the maximum, replace the drive gear, driven gear or pump body.

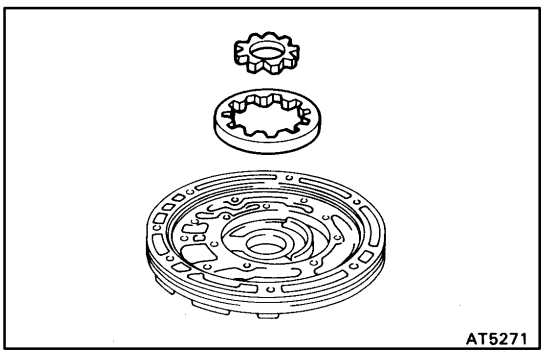

7. REMOVE OIL PUMP DRIVE GEAR AND DRIVEN GEAR

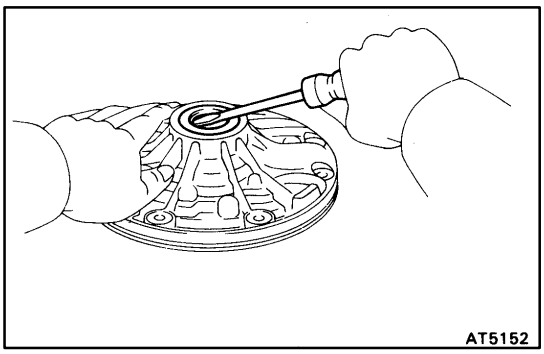

8. REMOVE OIL SEAL

(a) Pry off the oil seal with a screwdriver.

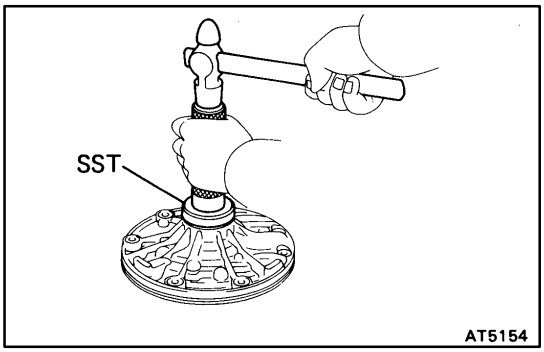

(b) Using SST, install a new oil seal.
The oil seal end should be flush with the outer edge of the pump body.
SST 09350-30020 (09351-32140)

(c) Coat the oil seal lip with MP grease.

AT0DG-03

OIL PUMP BUSHING CHECK

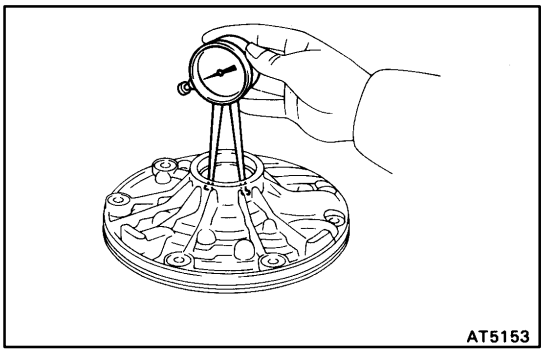

1. CHECK OIL PUMP BODY BUSHING

Using a dial indicator, measure the inside diameter of the oil pump body bushing.

Maximum inside diameter:

38.19 mm (1.5035 in.)

If the inside diameter is greater than the maximum, replace the oil pump body.

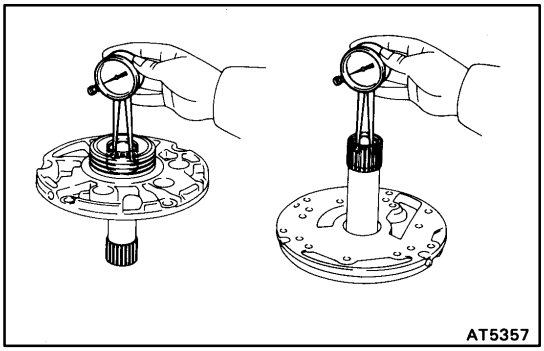

2. CHECK STATOR SHAFT BUSHING

Using a dial indicator, measure the inside diameter of the stator shaft bushing.

Maximum inside diameter (Front):

21.58 mm (0.8496 in.)

Maximum inside diameter (Rear):

27.08 mm (1.0661 in.)

If the inside diameter is greater than maximum, replace the stator shaft.

AT0DH-05

OIL PUMP ASSEMBLY

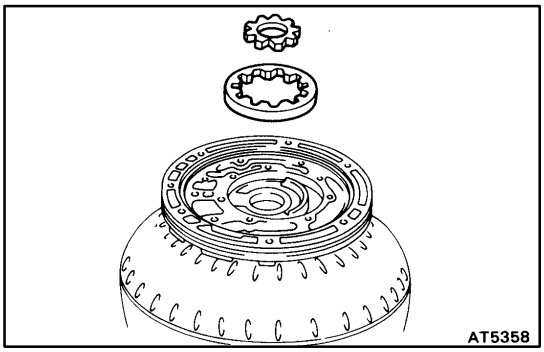

1. INSTALL DRIVEN GEAR AND DRIVE GEAR TO OIL PUMP BODY

(a) Place the oil pump body on the torque converter clutch.

(b) Coat the driven gear and drive gear with ATF.

(c) Install the driven gear and drive gear.

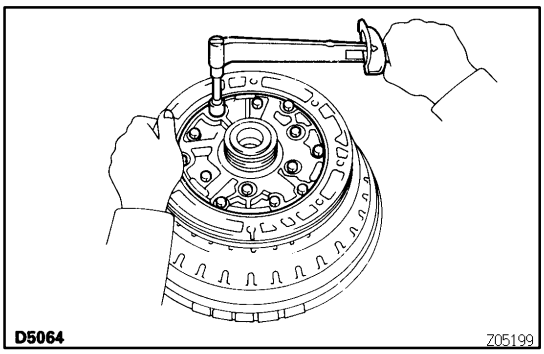

2. INSTALL STATOR SHAFT TO OIL PUMP BODY

(a) Align the stator shaft with each bolt hole.

(b) Tighten the 13 bolts.

Torque: 10 N·m (100 kgf·cm, 7 ft·lbf)

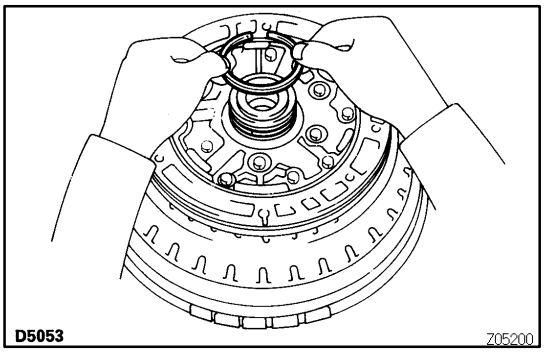

3. INSTALL OIL SEAL RINGS

(a) Coat the 2 oil seal rings with ATF.

(b) Install the 2 oil seal rings to the stator shaft groove, then snug them down by squeezing their ends together.

NOTICE: Do not spread the ring ends too much.

HINT: After installing the oil seal rings, check that they rotate smoothly.

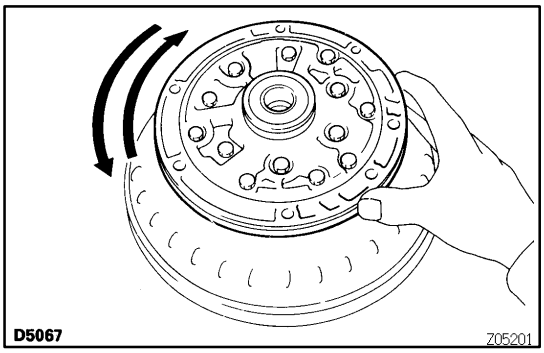

4. CHECK OIL PUMP DRIVE GEAR ROTATION

Make sure the drive gear rotates smoothly.

SECOND COAST BRAKE

AT0DJ-02

COMPONENTS

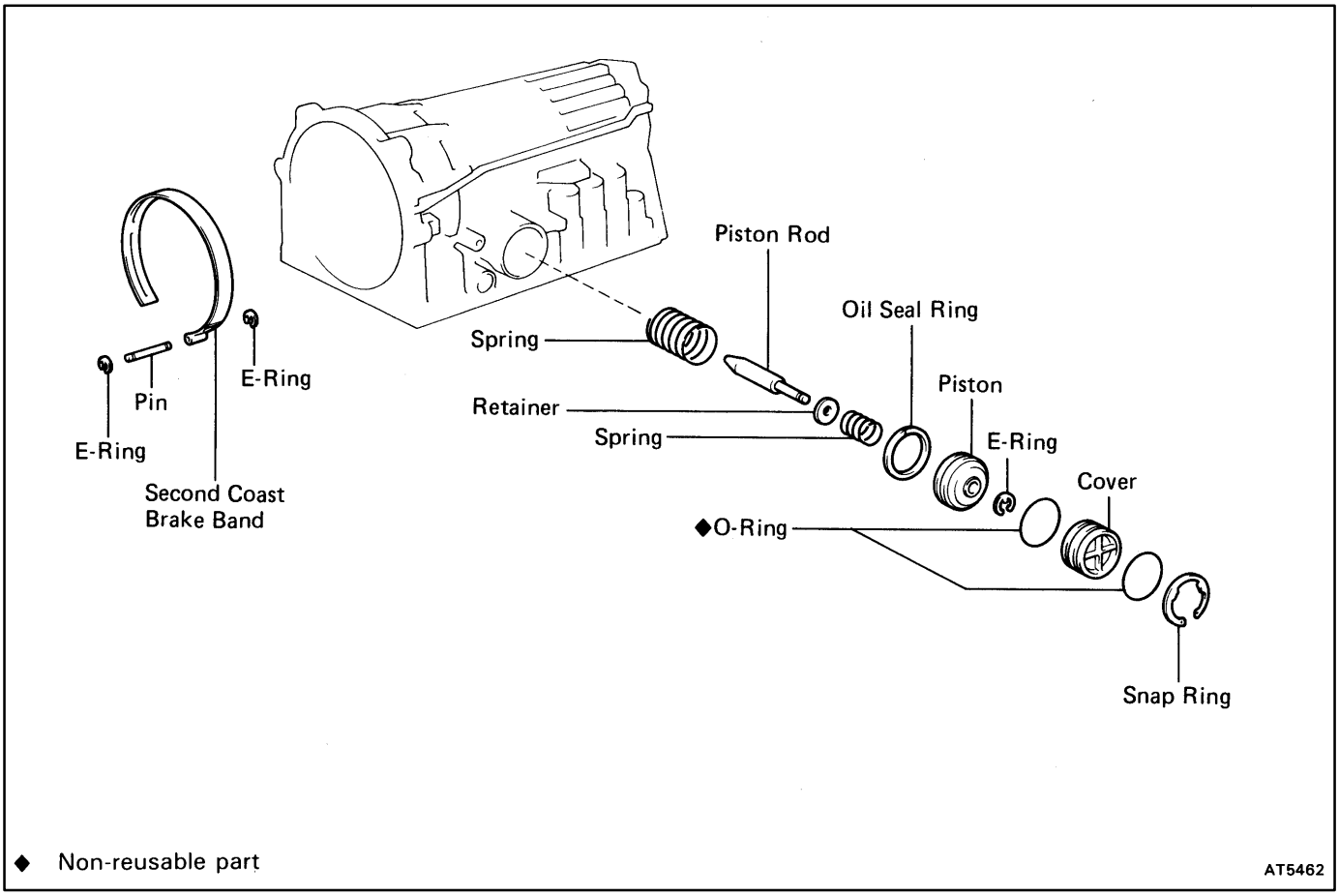

AT0DK-02

SECOND COAST BRAKE PISTON DISASSEMBLY

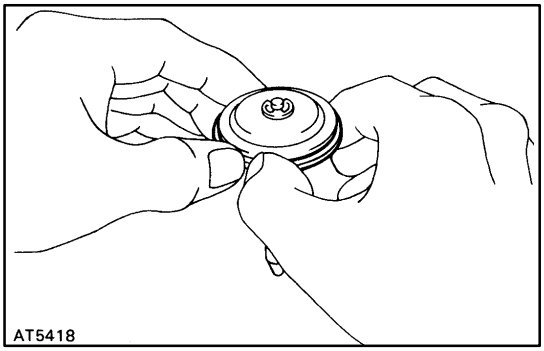

1. REMOVE SECOND COAST BRAKE PISTON OIL SEAL RING

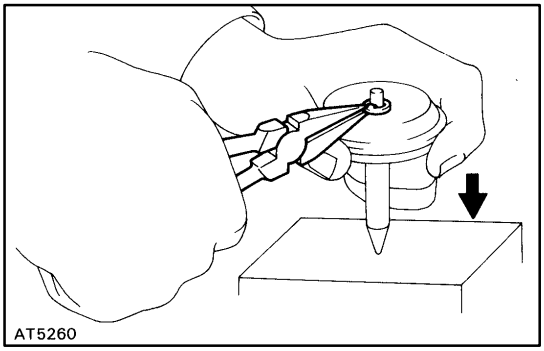

2. REMOVE SECOND COAST BRAKE PISTON ROD

(a) Firmly hold down the piston, then compress the compression spring.

(b) Remove the E-ring.

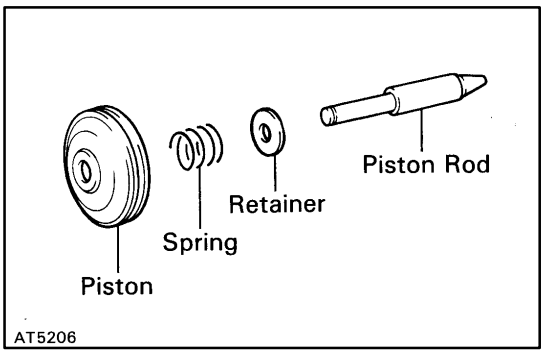

(c) Remove the compression spring, retainer and piston rod.

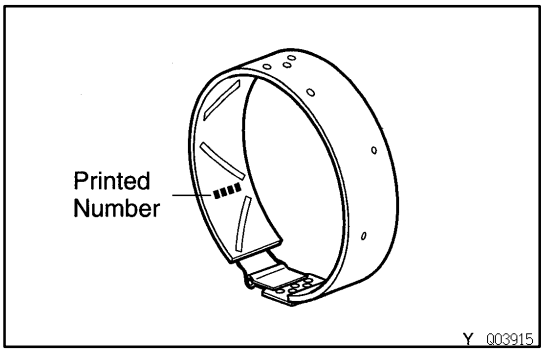

AT0DL-04

SECOND COAST BRAKE BAND INSPECTION

INSPECT BRAKE BAND

If the lining of the brake band is peeling off or discolored, or even if parts of the printed numbers are defaced, replace the brake band.

HINT: Before assembling the new band, soak it in ATF for at least 15 minutes.

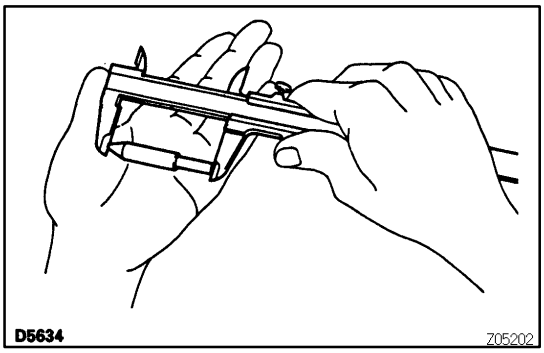

AT0DM-04

SECOND COAST BRAKE PISTON ASSEMBLY

1. SELECT PISTON ROD

If the band is OK with piston rod stroke not within the standard value, select a new piston rod.

HINT: There are 5 different piston rod lengths.

Piston rod length:

70.7 mm (2.783 in.)
71.4 mm (2.811 in.)
72.2 mm (2.843 in.)
72.9 mm (2.870 in.)
73.7 mm (2.902 in.)

2. ASSEMBLE SECOND COAST BRAKE PISTON

(a) Install the retainer, compression spring and piston to the piston rod.

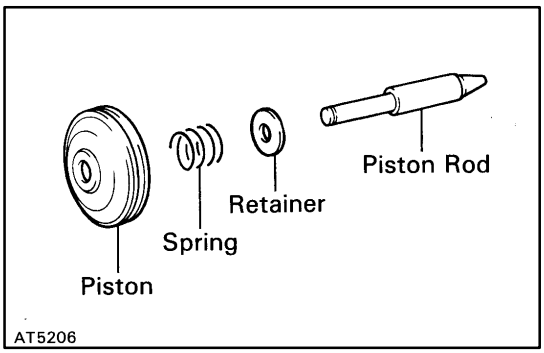

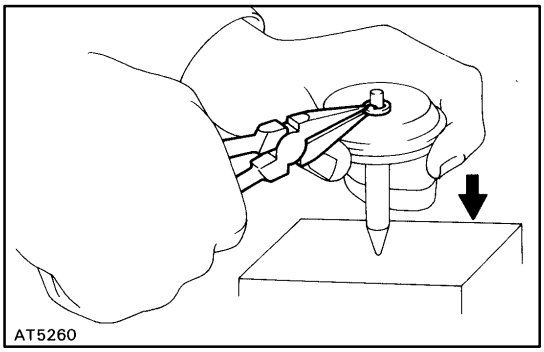

(b) Firmly hold down the piston, then compress the compression spring.

(c) Install the E-ring.

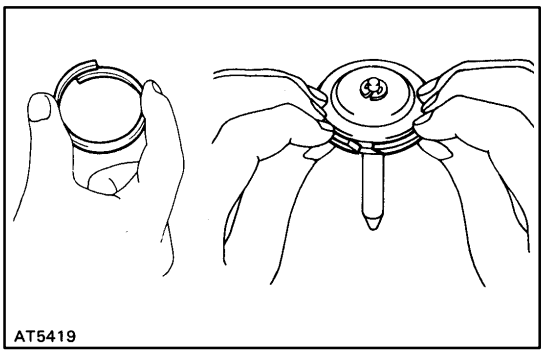

3. INSTALL SECOND COAST BRAKE PISTON OIL SEAL RING

(a) Coat the oil seal ring with ATF.

(b) Install the oil seal ring to the piston groove, then snug it down by squeezing its ends together.

NOTICE: Do not spread the ring ends more than necessary.

OVERDRIVE DIRECT CLUTCH

AT0DN-02

COMPONENTS

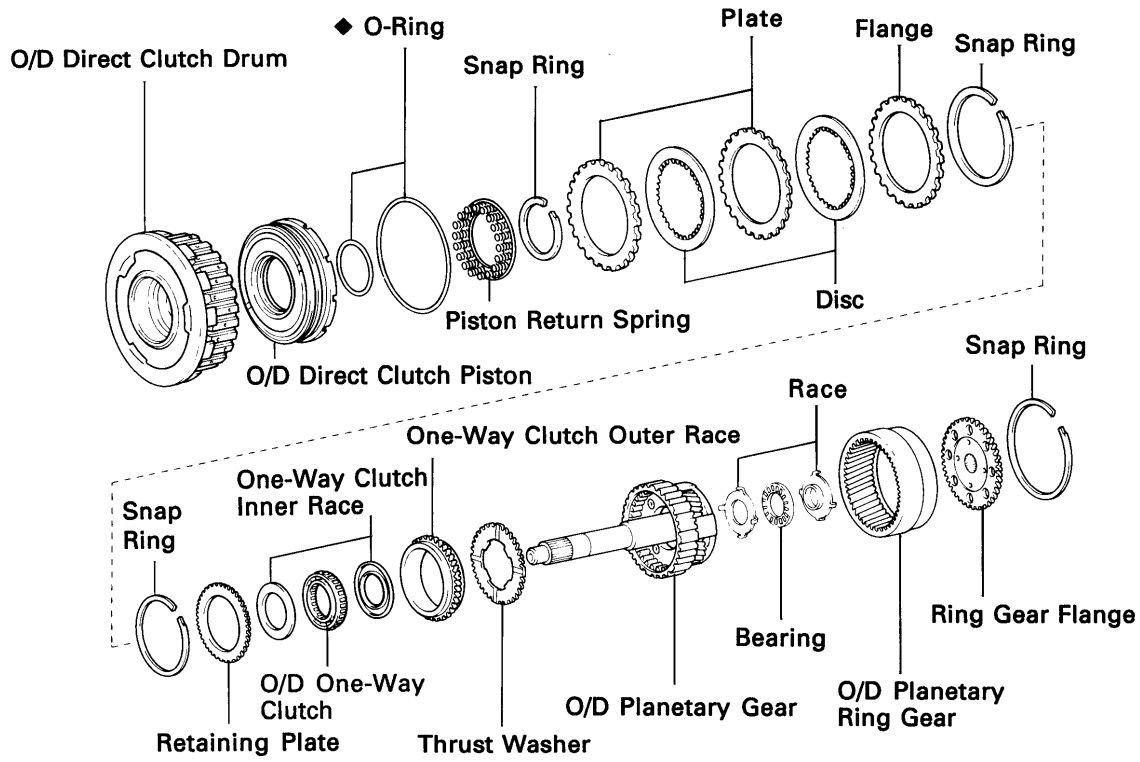

◆ Non-reusable part

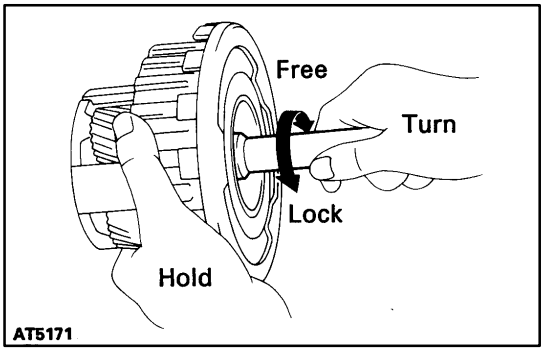

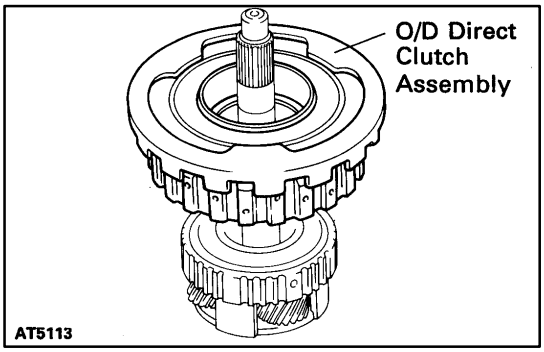

AT0DP-04

OVERDRIVE PLANETARY GEAR, OVERDRIVE DIRECT CLUTCH AND OVERDRIVE ONE-WAY CLUTCH DISASSEMBLY

1. **CHECK OPERATION OF ONE-WAY CLUTCH**
   Hold the O/D direct clutch drum and turn the input shaft. Check that the input shaft turns freely clockwise and locks counterclockwise.
2. **REMOVE OVERDRIVE DIRECT CLUTCH ASSEMBLY FROM OVERDRIVE PLANETARY GEAR**

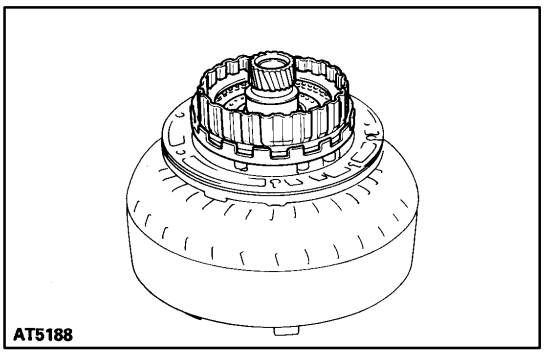

3. CHECK PISTON STROKE OF OVERDRIVE DIRECT CLUTCH

(a) Place the oil pump onto the torque converter clutch, and then place the O/D direct clutch assembly onto the oil pump.

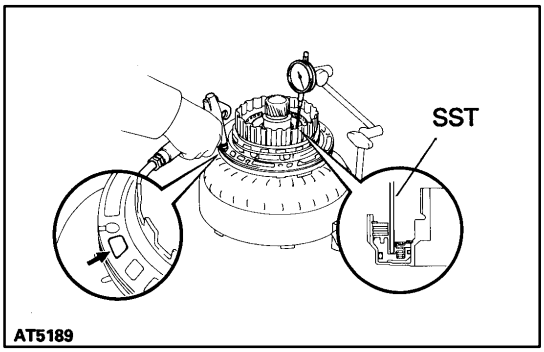

(b) Using SST and a dial indicator, measure the O/D direct clutch piston stroke while applying and releasing compressed air (392-785 kPa, 4-8 kgf/cm^2 or 57-114 psi).
SST 09350-30020 (09350-06120)
Piston stroke:
1.45-1.70 mm (0.057-0.067 in.)
If the values are non-standard, inspect the discs.

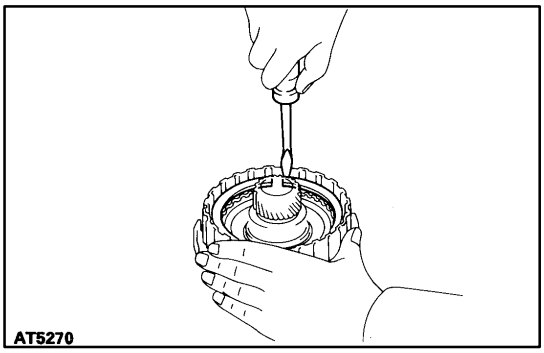

4. REMOVE FLANGE, PLATES AND DISCS

(a) Using a screwdriver, remove the snap ring from the O/D direct clutch drum.

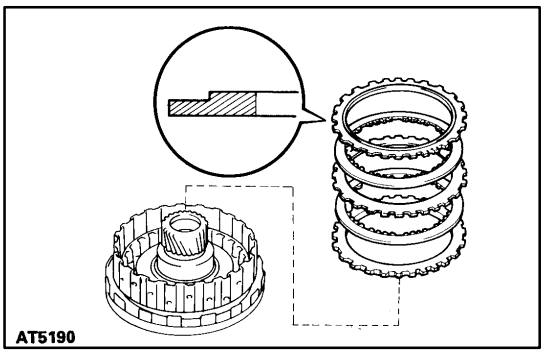

(b) Remove the flange, 2 plates and 2 discs.

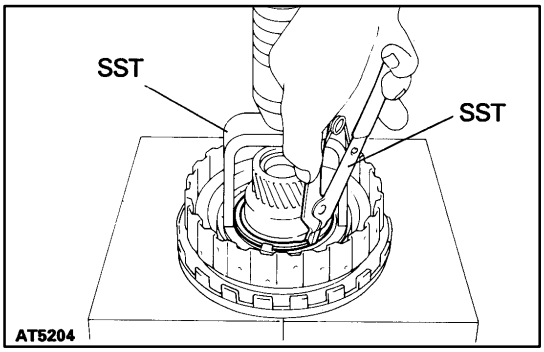

5. REMOVE PISTON RETURN SPRING

(a) Place SST on the spring retainer and compress the return spring with a shop press.
SST 09350-30020 (09350-07040)

(b) Using SST, remove the snap ring.
SST 09350-30020 (09350-07070)

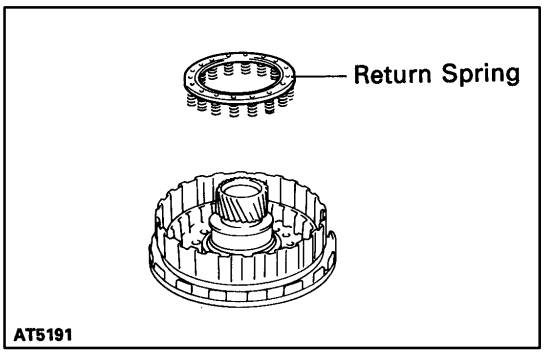

(c) Remove the piston return spring.

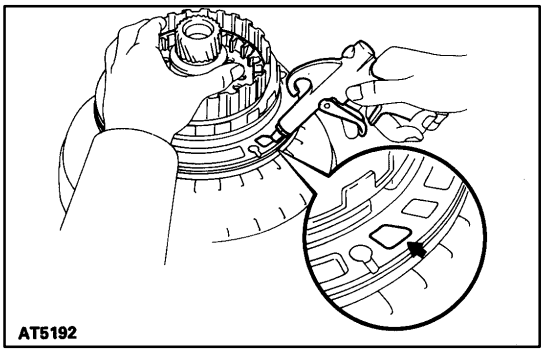

6. REMOVE OVERDRIVE DIRECT CLUTCH PISTON

(a) Place the oil pump onto the torque converter clutch and then place the O/D direct clutch onto the oil pump.

(b) Hold the O/D direct clutch piston, apply compressed air to the oil pump to remove the O/D direct clutch piston.

(c) Remove the O/D direct clutch piston.
HINT: If the piston is at an angle and cannot be removed, press down on the side jutting out and again apply compressed air, or else wind vinyl tape around the piston end and remove it with needle nose pliers.

(d) Remove the 2 O-rings from the piston.

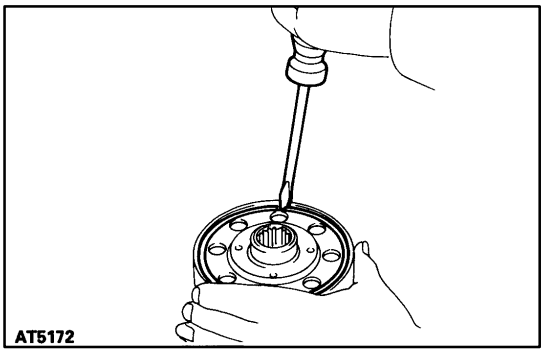

7. REMOVE RING GEAR FLANGE

(a) Using a screwdriver, remove the snap ring.

(b) Remove the ring gear flange.

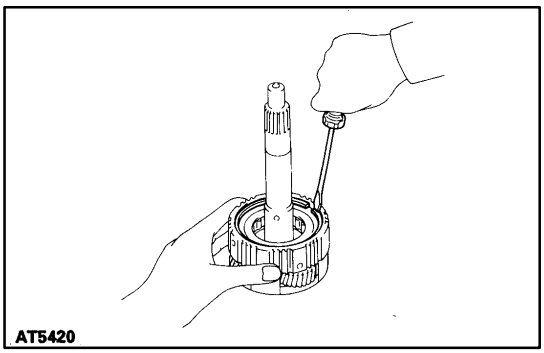

8. REMOVE RETAINING PLATE

(a) Using a screwdriver, remove the snap ring.

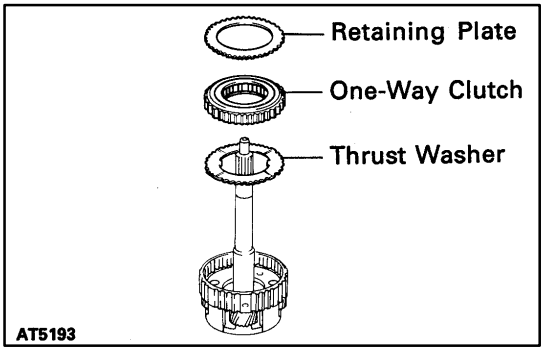

(b) Remove the retaining plate, one-way clutch and thrust washer.

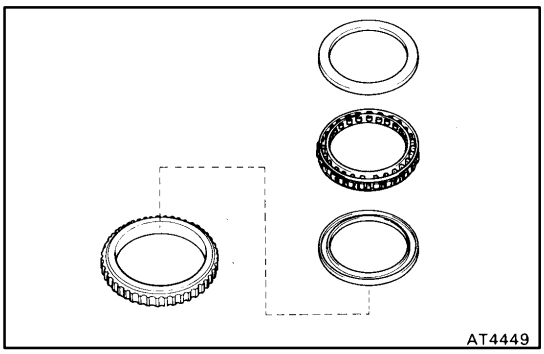

9. REMOVE ONE-WAY CLUTCH FROM OUTER RACE

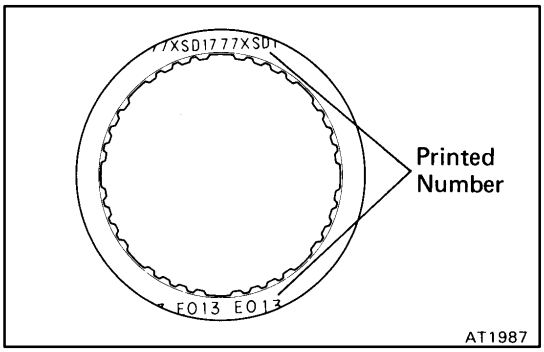

AT0DQ-04

OVERDRIVE PLANETARY GEAR AND OVERDRIVE DIRECT CLUTCH INSPECTION

1. INSPECT DISC AND FLANGE

Check to see if the sliding surface of the disc, plate and flange are worn or burnt. If necessary, replace them.

HINT:

★ If the lining of the disc is peeling off or discolored, or even if a part of the printed numbers are defaced, replace all discs.

★ Before assembling new discs, soak them in ATF for at least 15 minutes.

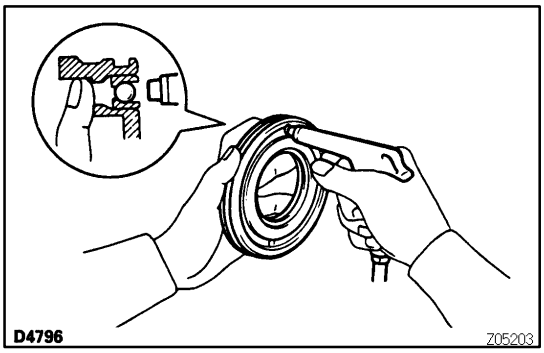

2. CHECK OVERDRIVE DIRECT CLUTCH PISTON

(a) Check that the check ball is free by shaking the piston.

(b) Check that the valve does not leak by applying low-pressure compressed air.

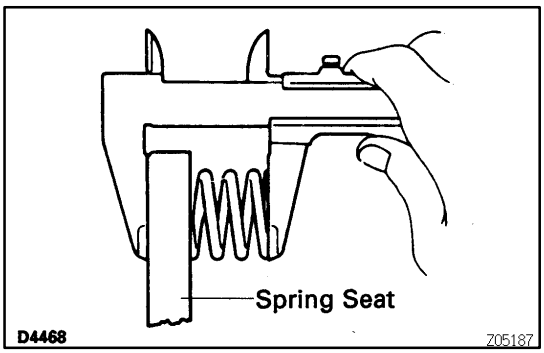

3. CHECK OVERDRIVE DIRECT CLUTCH RETURN SPRING

Check the spring free length together with the spring seat.

Standard free length:

15.8 mm (0.622 in.)

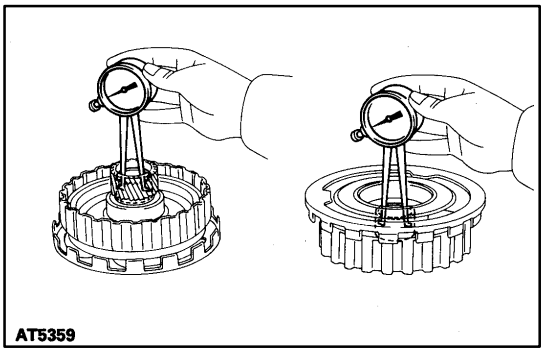

4. CHECK OVERDRIVE DIRECT CLUTCH DRUM BUSHINGS

Using a dial indicator, measure the inside diameter of the clutch drum bushings.

Maximum inside diameter:

27.11 mm (1.0673 in.)

If the inside diameter is greater than the maximum, replace the clutch drum.

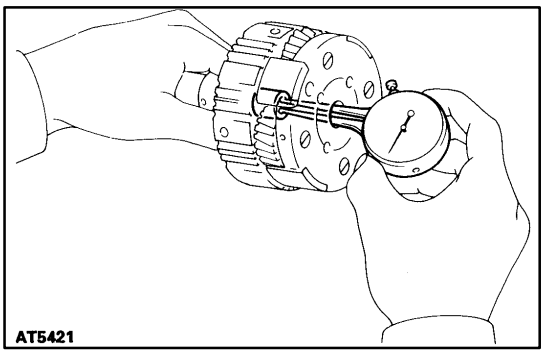

5. CHECK OVERDRIVE PLANETARY GEAR BUSHINGS

Using a dial indicator, measure the inside diameter of the planetary gear bushing.

Maximum inside diameter:

11.27 mm (0.4437 in.)

If the inside diameter is greater than the maximum, replace the planetary gear.

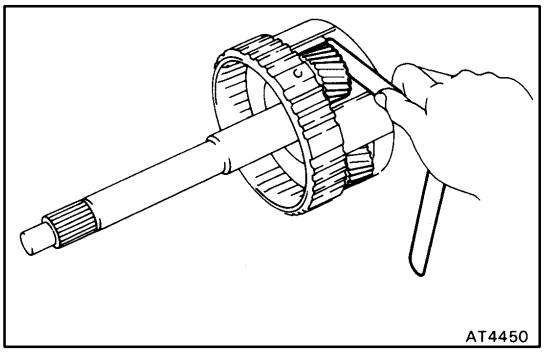

6. MEASURE PLANETARY PINION GEAR THRUST CLEARANCE

Using a feeler gauge, measure the planetary pinion gear thrust clearance.

Standard clearance:

0.2-0.6 mm (0.008-0.024 in.)

Maximum clearance:

1.0 mm (0.039 in.)

If the clearance is greater than the maximum, replace the planetary gear assembly.

AT0DR-05

OVERDRIVE PLANETARY GEAR, OVERDRIVE DIRECT CLUTCH AND OVERDRIVE ONE-WAY CLUTCH ASSEMBLY

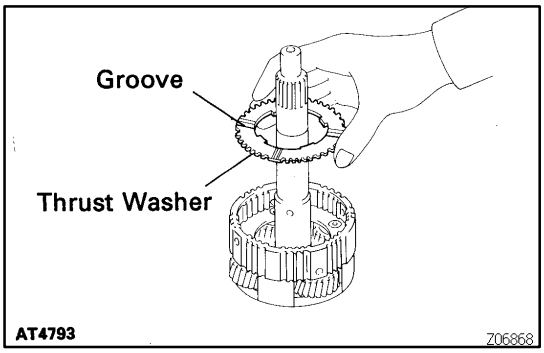

1. INSTALL OVERDRIVE ONE-WAY CLUTCH

(a) Install the thrust washer to the overdrive planetary gear, the grooved side facing upward.

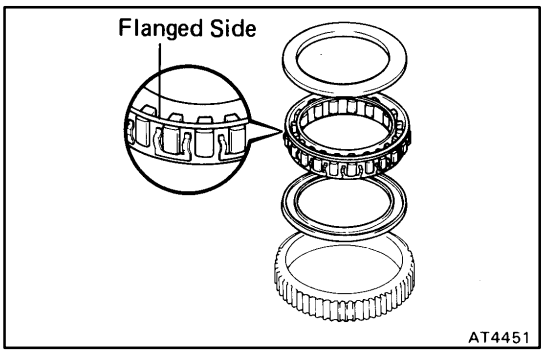

(b) Install the one-way clutch into the outer race the flanged side of the one-way clutch facing upward.

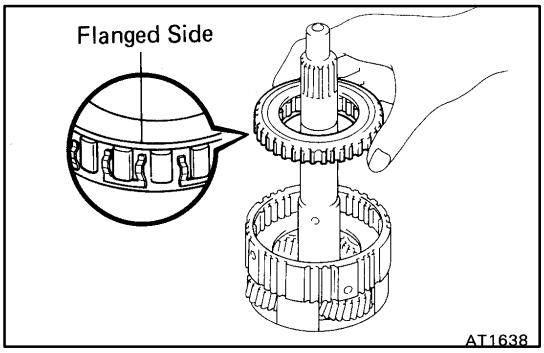

(c) Install the overdrive one-way clutch with the outer race to the overdrive planetary gear.

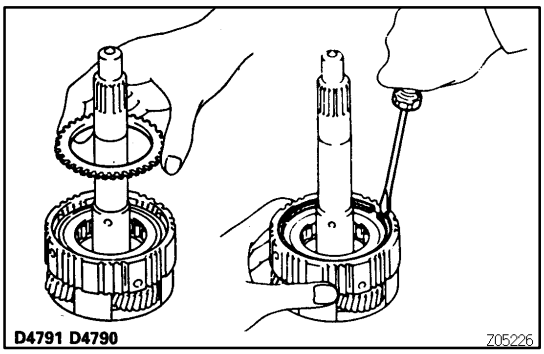

(d) Install the retaining plate.
(e) Using a screwdriver, install the snap ring.

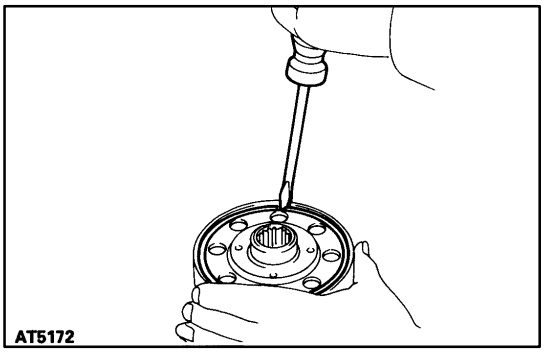

2. INSTALL RING GEAR FLANGE TO OVERDRIVE PLANETARY RING GEAR

(a) Install the ring gear flange.
(b) Using a screwdriver, install the snap ring.

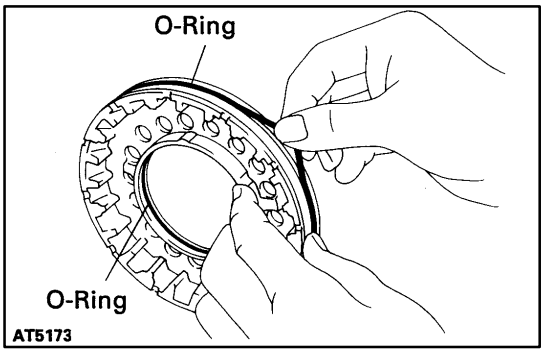

3. INSTALL OVERDRIVE DIRECT CLUTCH PISTON

(a) Coat new O-rings with ATF and install them on the O/D direct clutch piston.

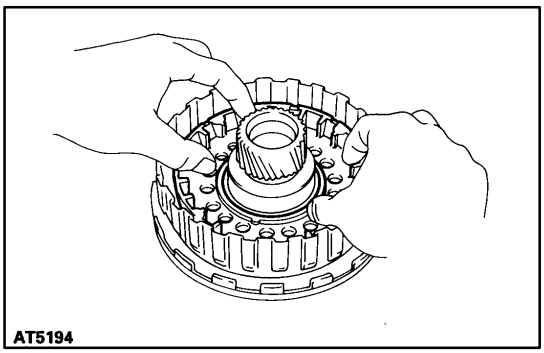

(b) Being careful not to damage the O-rings, press the direct clutch piston into the clutch drum with both hands.

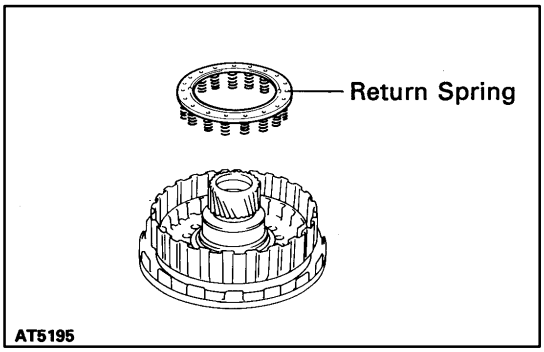

4. INSTALL PISTON RETURN SPRING

(a) Install the piston return spring to the piston.

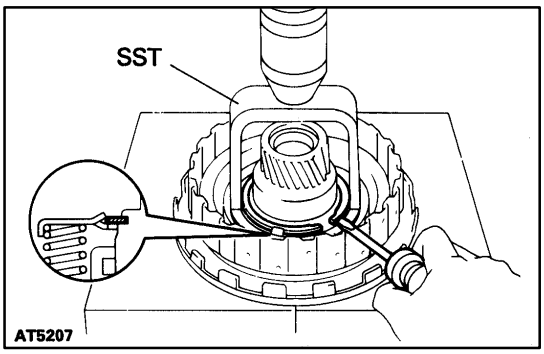

(b) Place SST on the spring retainer, and compress the return spring with a shop press.
SST 09350-30020 (09350-07040)

(c) Install the snap ring with SST. Be sure the end gap of the snap ring is not aligned with the spring retainer claw.
SST 09350-30020 (09350-07070)

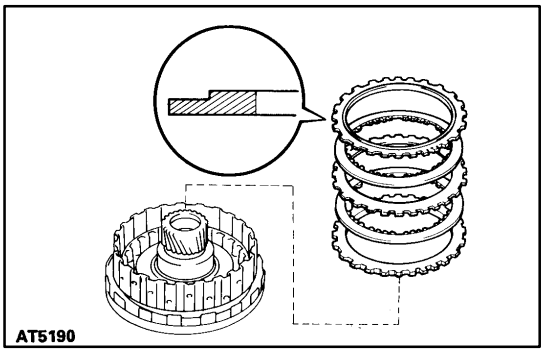

5. INSTALL PLATES, DISCS AND FLANGE

(a) Install the plates and discs.
Install in order: P = Plate D = Disc
P-D-P-D

(b) Install the flange, the flat end facing downward.

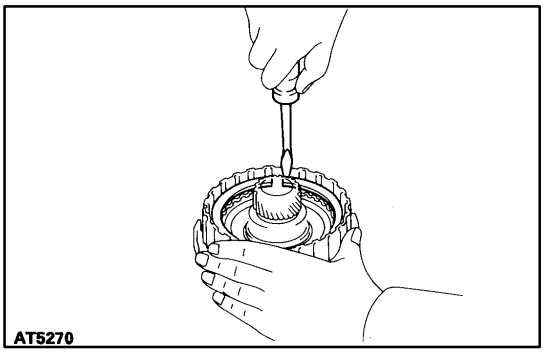

(c) Using a screwdriver, install the snap ring.

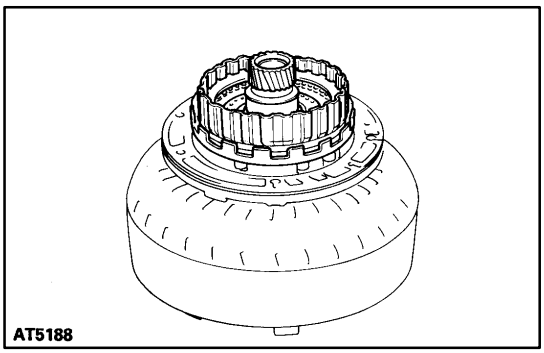

6. CHECK PISTON STROKE OF OVERDRIVE DIRECT CLUTCH

(a) Place the oil pump onto the torque converter clutch, then place the O/D direct clutch assembly onto the oil pump.

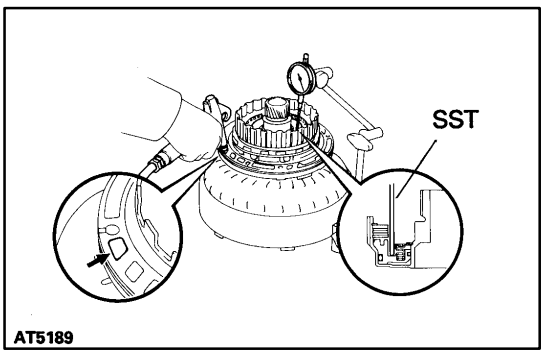

(b) Using SST and a dial indicator, measure the overdrive direct clutch piston stroke while applying and releasing compressed air (392-785 kPa, 4-8 kgf/cm^2 or 57-114 psi).
SST 09350-30020 (09350-06120)
Piston stroke:
1.45-1.70 mm (0.057-0.067 in.)
If the piston stroke is less than the limit, parts may have been assembled incorrectly, so check and reassemble

again.

If the piston stroke is nonstandard, select another flange.

HINT: There are 6 different flange thicknesses.

Flange Thickness

mm (in.)

No.	Thickness	No.	Thickness
16	3.6 (0.142)	19	3.3 (0.130)
17	3.5 (0.138)	20	3.2 (0.126)
18	3.4 (0.134)	21	3.1 (0.122)

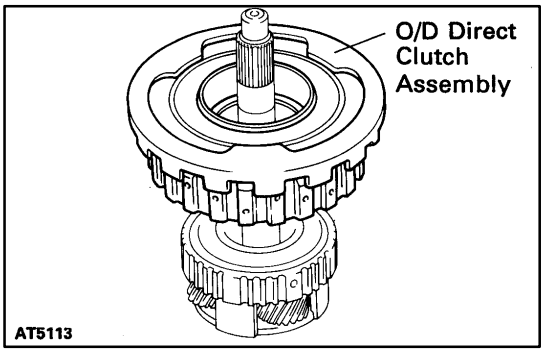

7. INSTALL OVERDRIVE DIRECT CLUTCH ASSEMBLY

(a) Align the flukes of the discs in the direct clutch.

(b) Install the direct clutch assembly onto the O/D planetary gear.

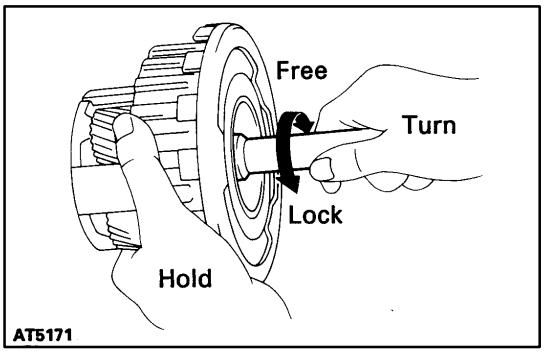

8. CHECK OPERATION OF ONE-WAY CLUTCH

Hold the O/D direct clutch drum and turn the input shaft. Check that the input shaft turns freely clockwise and locks counterclockwise.

OVERDRIVE BRAKE

AT0DS-02

COMPONENTS

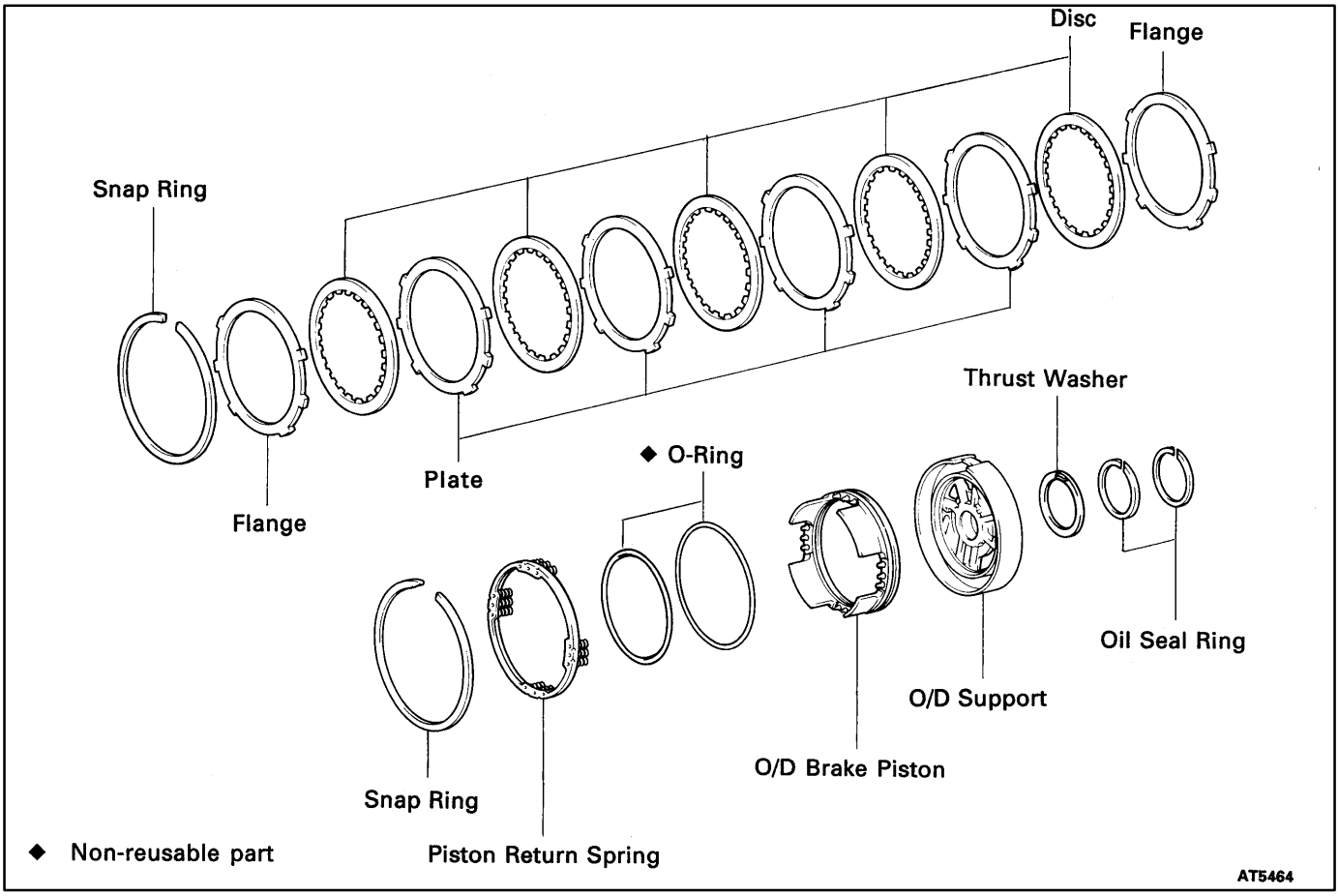

AT0DT-02

OVERDRIVE BRAKE DISASSEMBLY

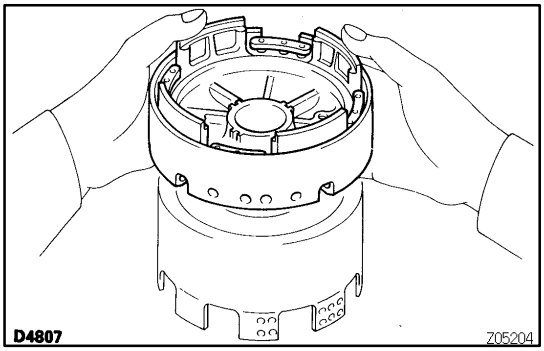

1. CHECK OVERDRIVE BRAKE PISTON MOVEMENT

(a) Place the O/D support assembly onto the direct clutch assembly.

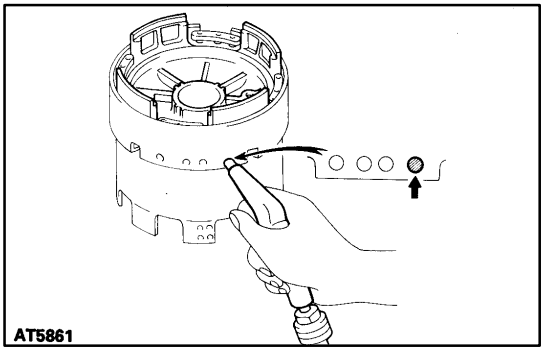

(b) Apply compressed air into the oil passage as shown, and be sure that the O/D brake piston moves smoothly.

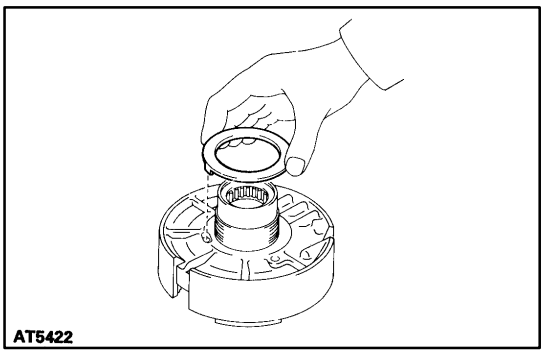

2. REMOVE CLUTCH DRUM THRUST WASHER FROM OVERDRIVE SUPPORT

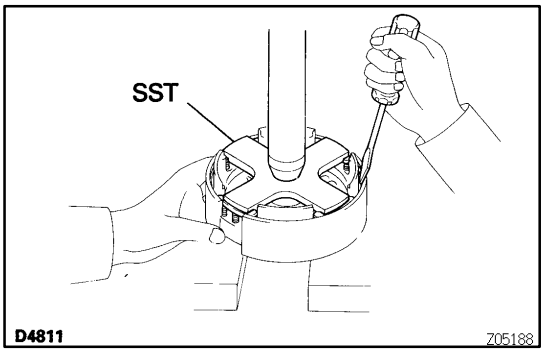

3. REMOVE PISTON RETURN SPRING

(a) Place SST on the spring retainer, and compress the return spring with a shop press.
SST 09350-30020 (09350-07030)
(b) Remove the snap ring with a screwdriver.
(c) Remove the piston return spring.

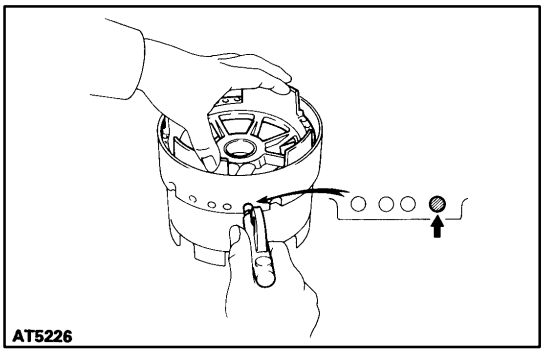

4. REMOVE OVERDRIVE BRAKE PISTON

(a) Place the O/D support onto the direct clutch assembly.
(b) Hold the O/D brake piston so it does not slant, and apply compressed air into the passage to remove the O/D brake piston.
(c) Remove the O/D brake piston.

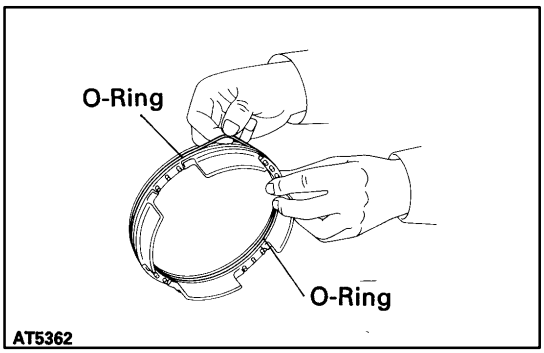

(d) Remove the 2 O-rings.

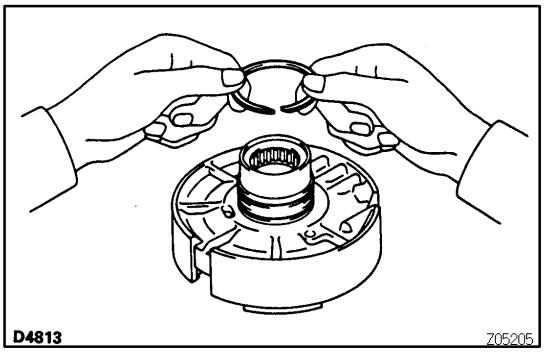

5. REMOVE OIL SEAL RINGS

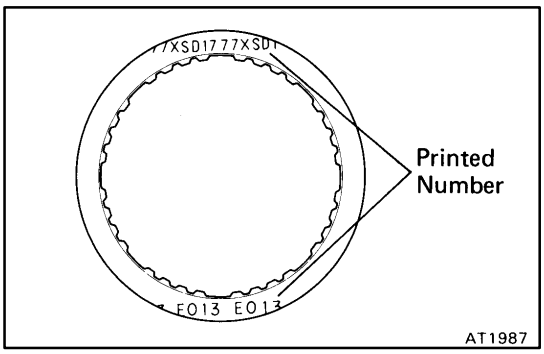

AT0DU-04

OVERDRIVE BRAKE INSPECTION

1. INSPECT DISC, PLATE AND FLANGE

Check to see if the sliding surface of the disc, plate and flange are worn or burnt. If necessary, replace them.

HINT:

★ If the lining of the disc is peeling off or discolored, or even if a part of the printed numbers are defaced, replace all discs.

★ Before assembling new discs, soak them in ATF for at least 15 minutes.

2. CHECK OVERDRIVE BRAKE PISTON RETURN SPRING

Check the spring free length together with the spring seat.

Standard free length:

17.23 mm (0.6783 in.)

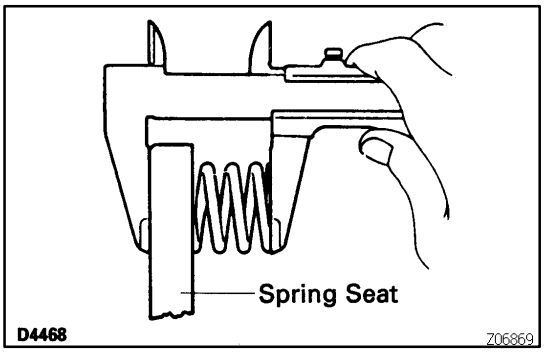

AT0DV-04

OVERDRIVE BRAKE ASSEMBLY

1. INSTALL OIL SEAL RINGS

(a) Coat the 2 oil seal rings with ATF.

(b) Install the 2 oil seal rings to the O/D support groove, then snug them down by squeezing their ends together.

NOTICE: Do not spread the ring ends more than necessary.

HINT: After installing the oil seal rings, check that they rotate smoothly.

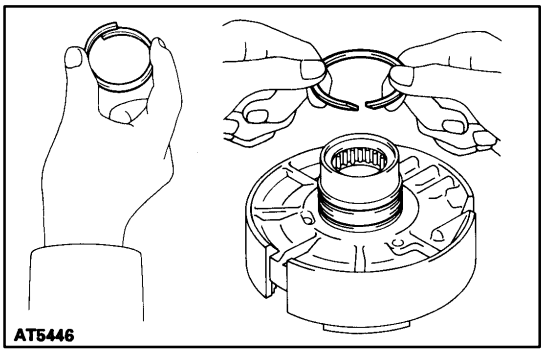

2. INSTALL OVERDRIVE BRAKE PISTON

(a) Coat 2 new O-rings with ATF and install them on the O/D brake piston.

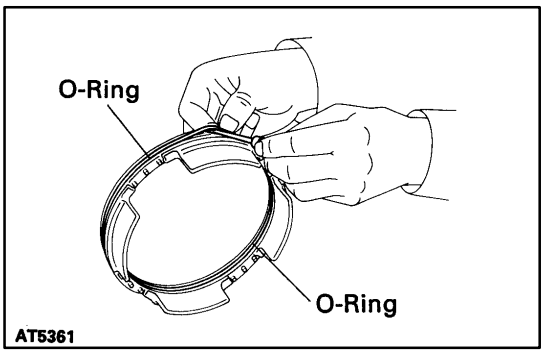

(b) Being careful not to damage the O-rings, press in the brake piston into the O/D support with both hands.

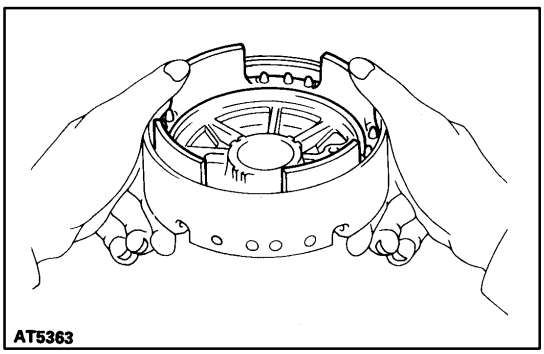

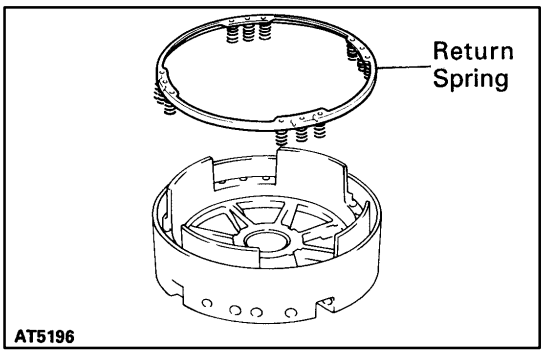

3. INSTALL PISTON RETURN SPRING

(a) Install the piston return spring.

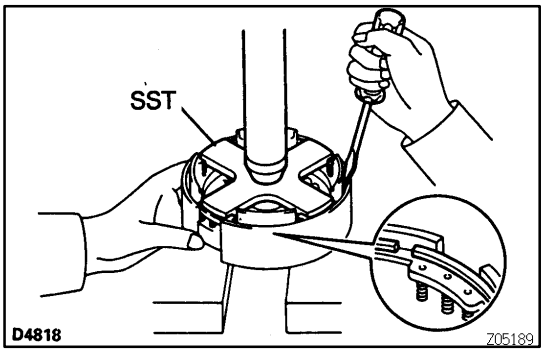

(b) Place SST on the spring retainer, and compress the return spring with a shop press.
SST 09350-30020 (09350-07030)

(c) Install the snap ring with a screwdriver. Be sure the end gap of the snap ring is not aligned with the cutout portion of the O/D support.

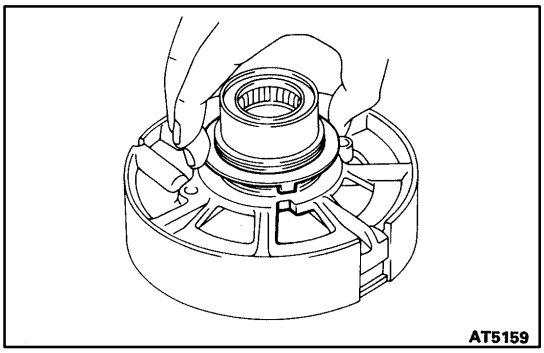

4. INSTALL CLUTCH DRUM THRUST WASHER

Coat the thrust washer with petroleum jelly and install it into the O/D support.
HINT: Make sure that the lug shape matches the hole on the O/D support.

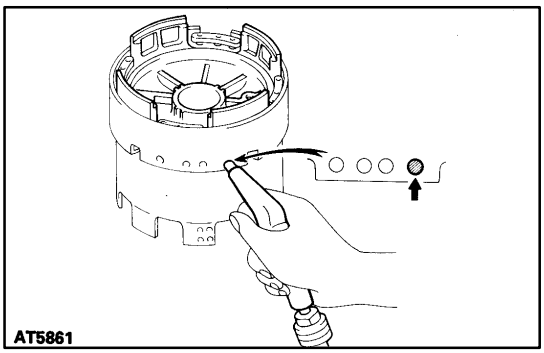

5. CHECK OVERDRIVE BRAKE PISTON MOVEMENT

(a) Place the O/D support assembly onto the direct clutch assembly.

(b) Apply compressed air into the oil passage as shown, and be sure that the O/D Brake piston moves smoothly.

DIRECT CLUTCH

AT0DW-02

COMPONENTS

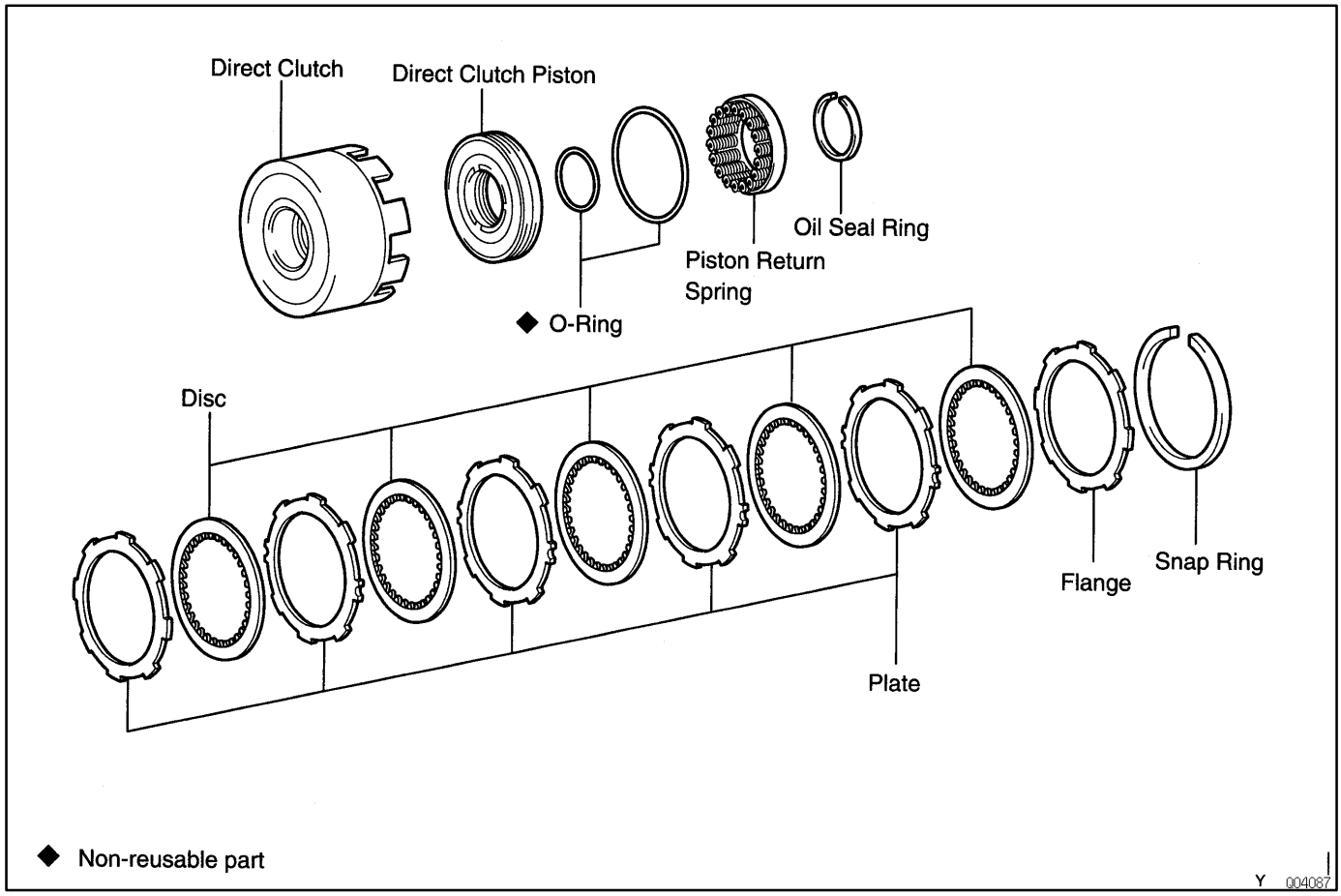

AT0DX-04

DIRECT CLUTCH DISASSEMBLY

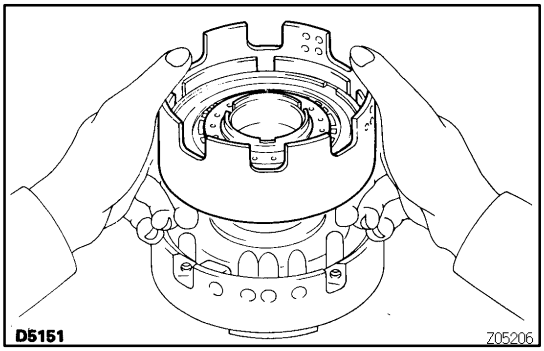

1. CHECK PACK CLEARANCE OF DIRECT CLUTCH

(a) Place the direct clutch assembly onto the O/D support assembly.

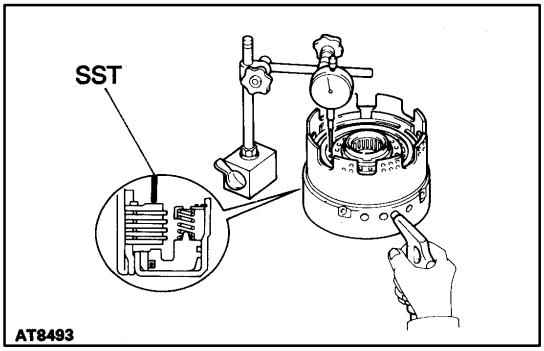

(b) Using SST and a dial indicator, measure the direct clutch pack clearancewhile applying and releasing compressed air (186-206 kPa, 1.9-2.1 kgf/cm^2, 27-30 psi).
SST 09350-30020 (09350-06120)

Pack clearance:

0.50 - 0.80 mm (0.0197 - 0.0315 in.)

If the values are non-standard inspect the discs.

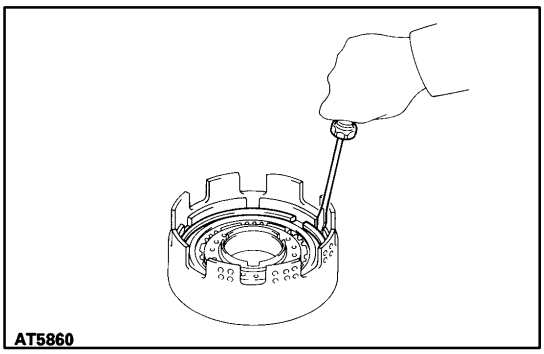

2. REMOVE FLANGE, PLATES AND DISCS

(a) Using a screwdriver, remove the snap ring from the direct clutch drum.

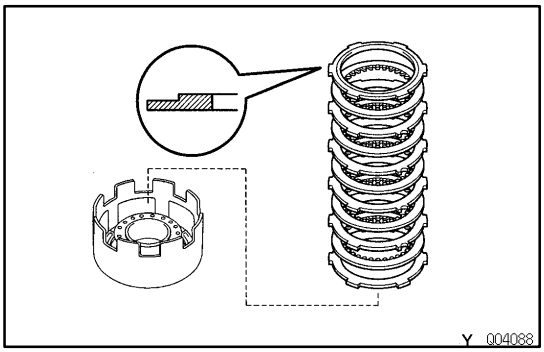

(b) Remove the flange, 5 plates and 5 discs.

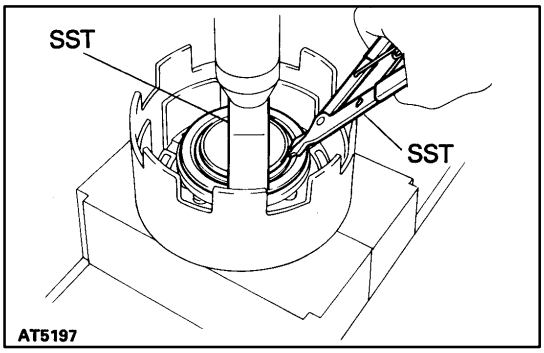

3. REMOVE PISTON RETURN SPRING

(a) Place SST on the spring retainer and compress the return spring with a shop press.
SST 09350-30020 (09350-07040)

(b) Using SST, remove the snap ring.
SST 09350-30020 (09350-07070)

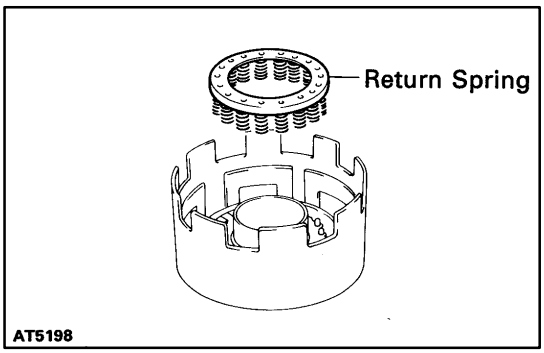

(c) Remove the piston return spring.

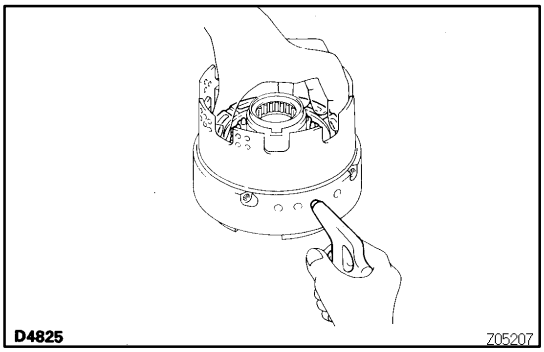

4. REMOVE DIRECT CLUTCH PISTON

(a) Place the direct clutch drum onto the O/D support.

(b) Hold the direct clutch piston and apply compressed air to the O/D support to remove the direct clutch piston.
HINT: Make sure the direct clutch piston is square in the drum before applying compressed air.

(c) Remove the direct clutch piston.

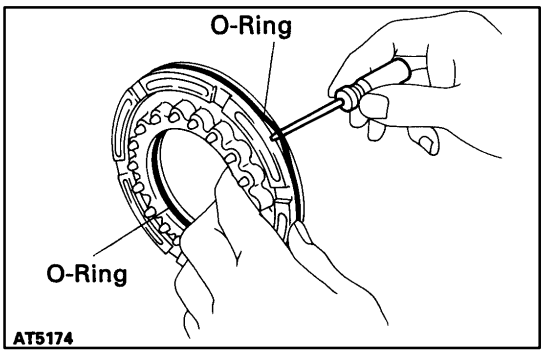

(d) Using a small screwdriver, remove the 2 O-rings from the piston.

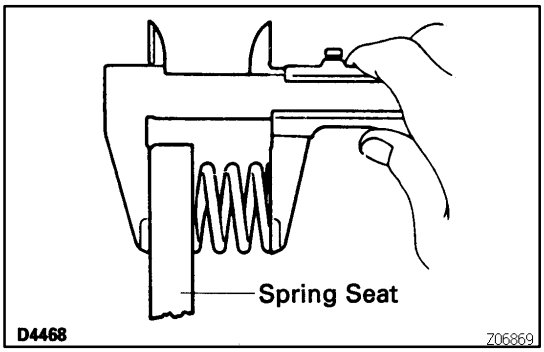

AT0DY-04

DIRECT CLUTCH INSPECTION

1. CHECK DIRECT CLUTCH PISTON RETURN SPRING

Check the spring free length together with the spring seat.

Standard free length:

23.25 mm (0.9154 in.)

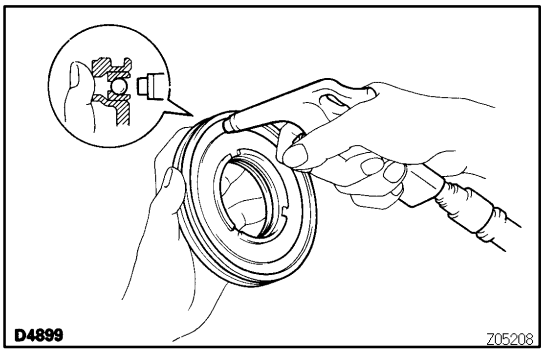

2. CHECK DIRECT CLUTCH PISTON

(a) Check that the check ball is free by shaking the piston.

(b) Check that the valve does not leak by applying low-pressure compressed air.

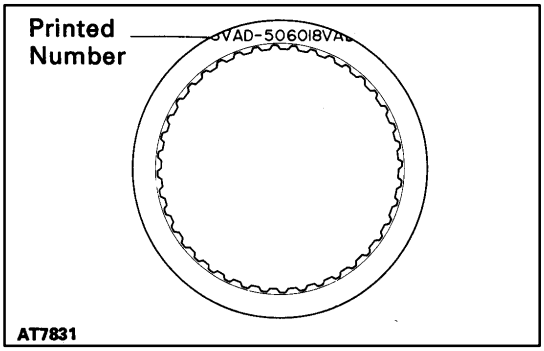

3. INSPECT DISC, PLATE AND FLANGE

Check to see if the sliding surface of the disc, plate and flange are worn or burnt. If necessary, replace them.

HINT:

★ If the lining of the disc is peeling off or discolored, or even if a part of the printed numbers are defaced, replace all discs.

★ Before assembling new discs, soak them in ATF for at least 15 minutes.

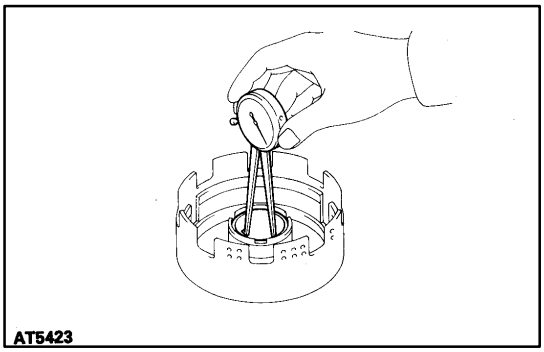

4. CHECK DIRECT CLUTCH BUSHING

Using a dial indicator, measure the inside diameter of the clutch drum bushing.

Maximum inside diameter:

53.97 mm (2.1248 in.)

If the inside diameter is greater than the maximum, replace the clutch drum.

AT0DZ-04

DIRECT CLUTCH ASSEMBLY

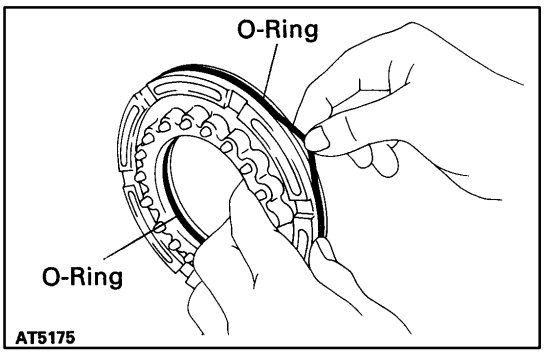

1. INSTALL DIRECT CLUTCH PISTON TO DIRECT CLUTCH DRUM

(a) Coat new O-rings with ATF and install them on the direct clutch piston.

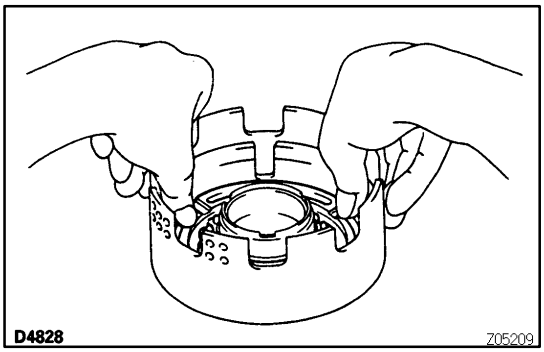

(b) Being careful not to damage the O-rings, press in the direct clutch piston into the clutch drum with both hands.

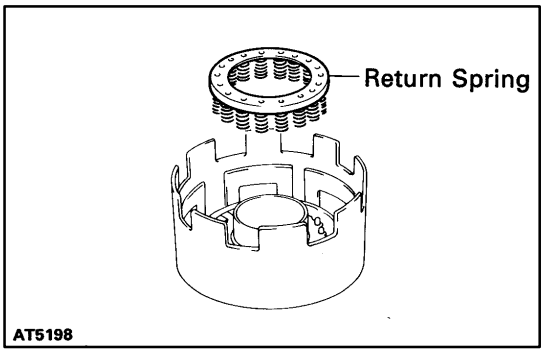

2. INSTALL PISTON RETURN SPRING

(a) Install the piston return spring.

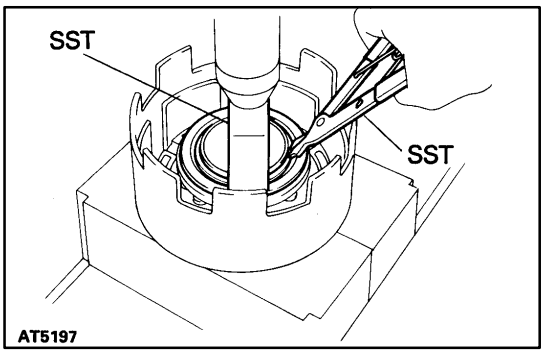

(b) Place SST on the spring retainer, and compress the return spring with a shop press.
SST 09350-30020 (09350-07040)

(c) Using SST, install the snap ring.
SST 09350-30020 (09350-07070)
Be sure the end gap of the snap ring is not aligned with the spring retainer claw.

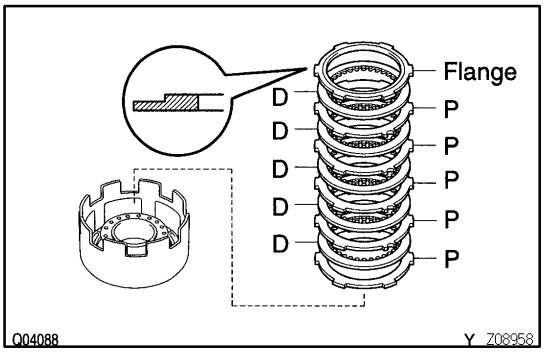

3. INSTALL PLATES, DISCS AND FLANGE

(a) Install the plates and discs.
Install in order: P = Plate D = Disk
P-D-P-D-P-D-P-D-P-D

(b) Install the flange, the flat end facing downward.

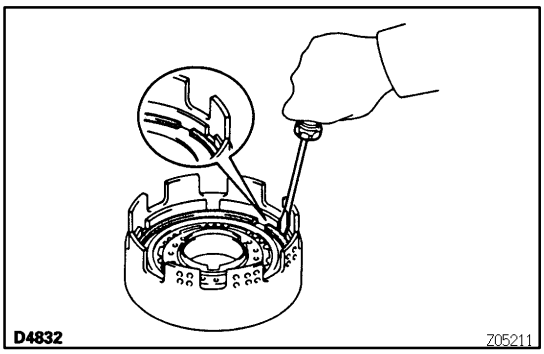

(c) Using a screwdriver, install the snap ring. Be sure the end gap of the snap ring is not aligned with the cutout portion of the direct clutch drum.

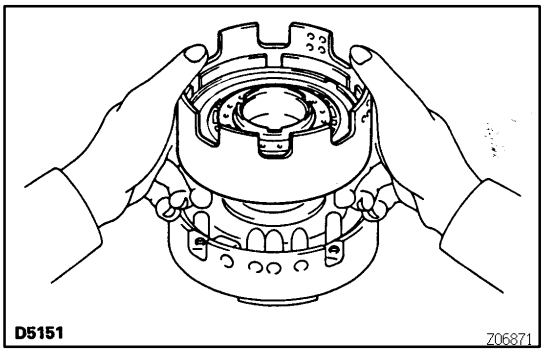

4. CHECK PISTON STROKE OF DIRECT CLUTCH

(a) Place the direct clutch assembly onto the O/D support assembly.

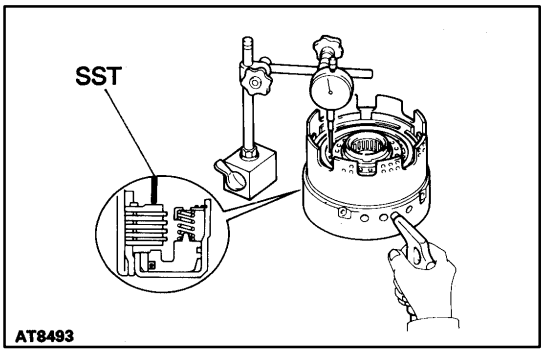

(b) Using SST and a dial indicator, measure the direct clutch pack clearance while applying and releasing compressed air (186-206 kPa, 1.9-2.1 kgf/cm^2, 27-30 psi).
SST 09350-30020 (09350-06120)
Pack clearance:
0.50 - 0.80 mm (0.0197 - 0.0315 in.)
If the pack clearance is less than the limit, parts may have been assembled incorrectly, so check and reassemble again.
If the pack clearance is non-standard, select another flange.
HINT: There are 9 different flange thicknesses.
Flange thickness
mm (in.)

No.	Thickness	No.	Thickness
86	2.7 (0.106)	30	3.3 (0.130)
85	2.8 (0.110)	29	3.4 (0.134)
84	2.9 (0.114)	28	3.5 (0.138)
33	3.0 (0.118)	27	3.6 (0.142)
32	3.1 (0.122)	34	3.7 (0.146)
31	3.2 (0.126)	-	-

FORWARD CLUTCH

AT0E0-02

COMPONENTS

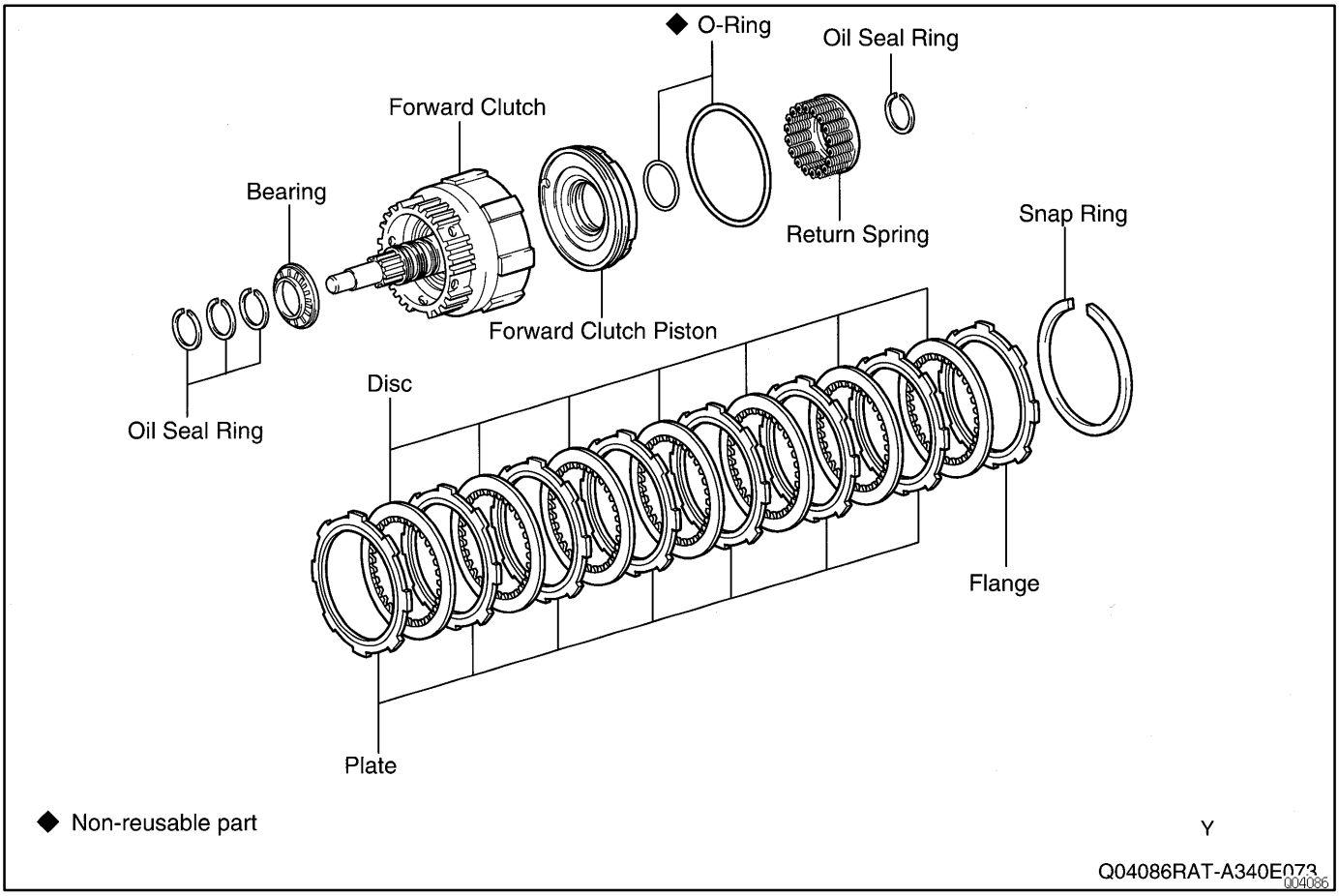

AT0E1-04

FORWARD CLUTCH DISASSEMBLY

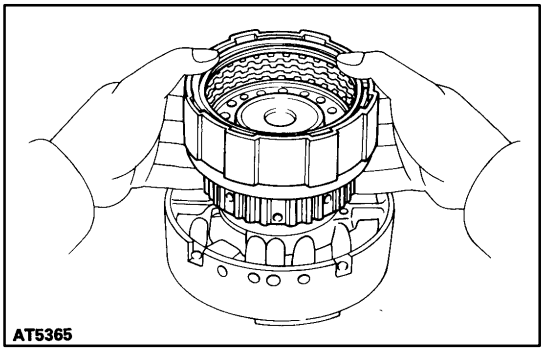

1. PLACE FORWARD CLUTCH INTO OVERDRIVE SUPPORT

(a) Place wooden blocks, etc. to prevent forward clutch shaft from touching the work stand, and place the O/D support on them.

(b) Place the forward clutch onto the O/D support.

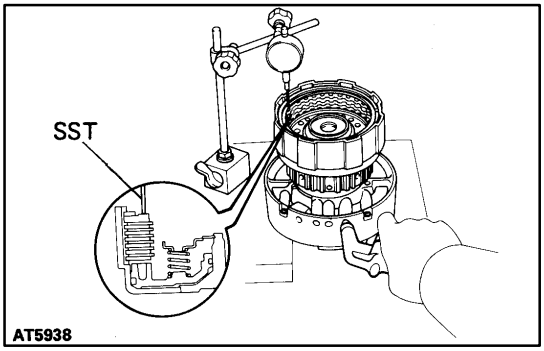

2. CHECK FORWARD CLUTCH PACK CLEARANCE

Using SST and a dial indicator, measure forward clutch pack clearance while applying and releasing compressed air (186-206 kPa, 1.9-21. kgf/cm^2, 27-30 psi).

SST 09350-30020 (09350-06120)

Pack clearance:

0.70-1.00 mm (0.0276-0.0394 in.)

If the values are non-standard, inspect the discs.

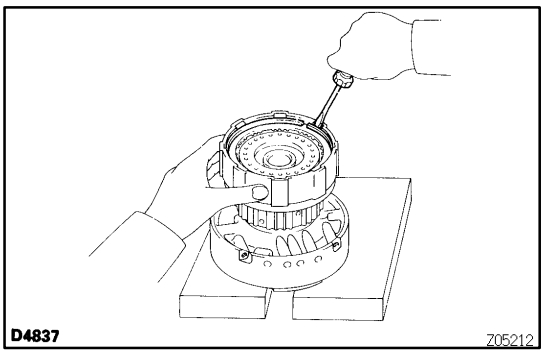

3. REMOVE FLANGE, PLATES AND DISCS

(a) Using a screwdriver, remove the snap ring from the forward clutch drum.

(b) Remove the flange, 7 plates and 7 discs.

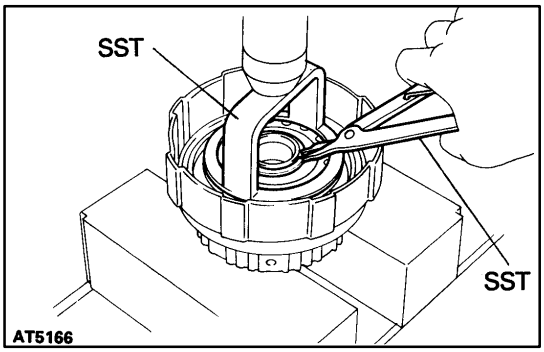

4. REMOVE PISTON RETURN SPRING

(a) Place SST on the spring retainer and compress the return spring with a shop press.
SST 09350-30020 (09350-07040)

(b) Using SST, remove the snap ring.
SST 09350-30020 (09350-07070)

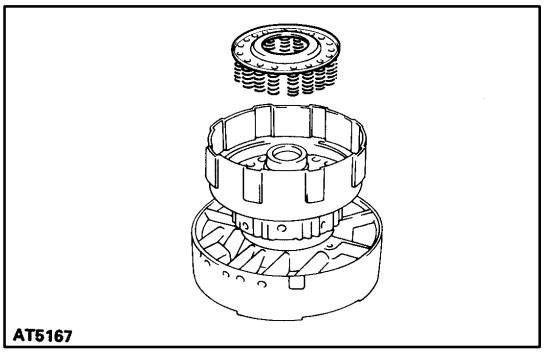

(c) Remove the piston return spring.

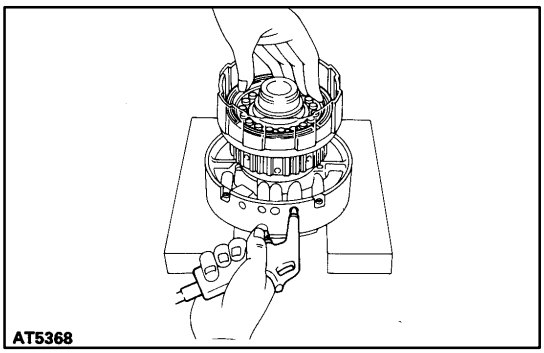

5. REMOVE FORWARD CLUTCH PISTON

(a) Place the forward clutch drum onto the O/D support.

(b) Hold the forward clutch piston with hand, apply compressed air to the O/D support to remove the forward clutch piston.

(c) Remove the forward clutch piston.

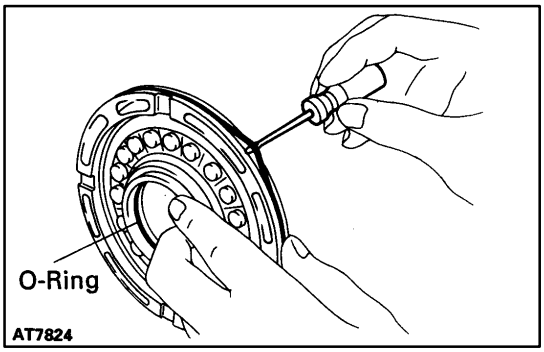

6. REMOVE 2 O-RINGS FROM PISTON

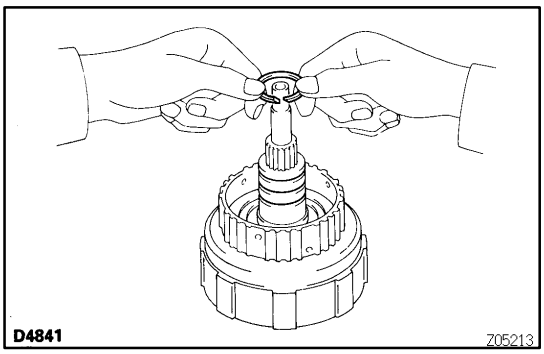

7. REMOVE 3 OIL SEAL RINGS FROM FORWARD CLUTCH

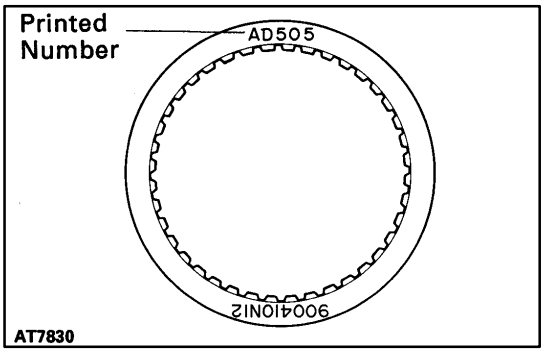

AT0E2-04

FORWARD CLUTCH INSPECTION

1. INSPECT DISC, PLATE AND FLANGE

Check to see if the sliding surface of the disc, plate and flange are worn or burnt. If necessary, replace them.

HINT:

★ If the lining of the disc is peeling off or discolored, or even if a part of the printed numbers are defaced, replace all discs.

★ Before assembling new discs, soak them in ATF for at least 15 minutes.

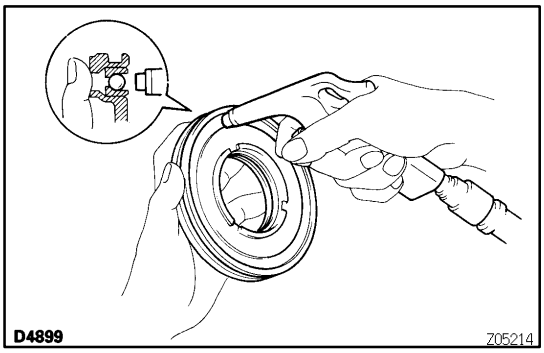

2. CHECK FORWARD CLUTCH PISTON

(a) Check that the check ball is free by shaking the piston.

(b) Check that the valve does not leak by applying low-pressure compressed air.

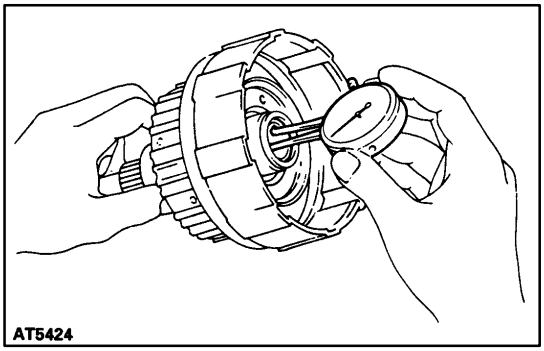

3. CHECK FORWARD CLUTCH DRUM BUSHING

Using a dial indicator, measure the inside diameter of the forward clutch drum bushing.

Maximum inside diameter:

24.08 mm (0.9480 in.)

If the inside diameter is greater than the maximum, replace the forward clutch drum.

AT0E3-04

FORWARD CLUTCH ASSEMBLY

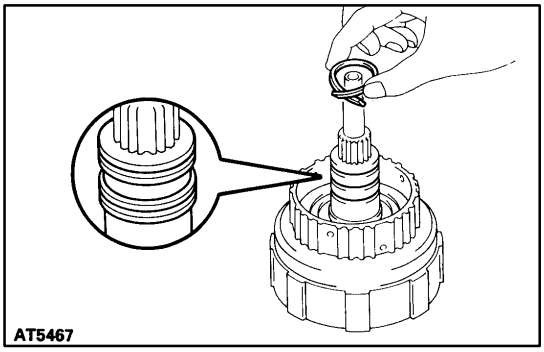

1. INSTALL OIL SEAL RINGS

(a) Coat the 3 oil seal rings with ATF.

(b) Install the 3 oil seal rings to the forward clutch drum groove, then snug them down by squeezing their ends together.

NOTICE: Do not spread the ring ends more than necessary.

HINT: After installing the oil seal rings, check that they rotate smoothly.

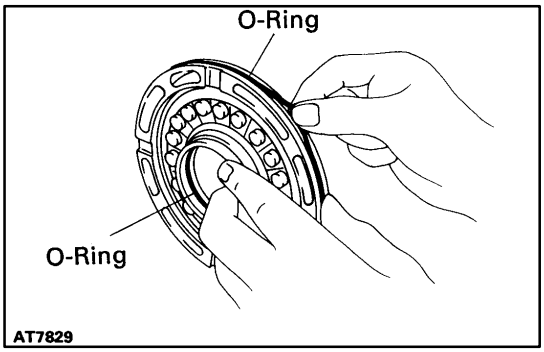

2. INSTALL FORWARD CLUTCH PISTON

(a) Coat 2 new O-rings with AFT and install them on the forward clutch piston.

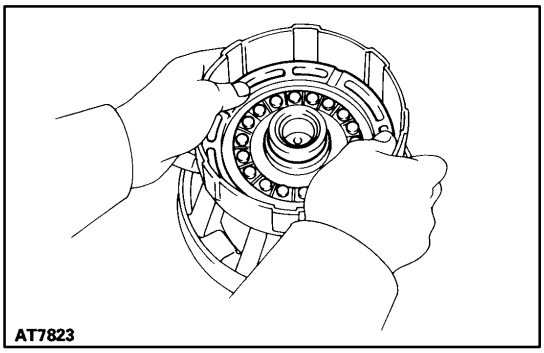

(b) Being careful not to damage the O-rings, press the clutch piston into the forward clutch drum with both hands.

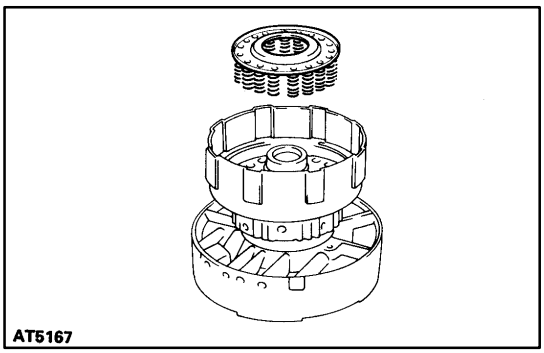

3. INSTALL PISTON RETURN SPRING

(a) Install the piston return spring.

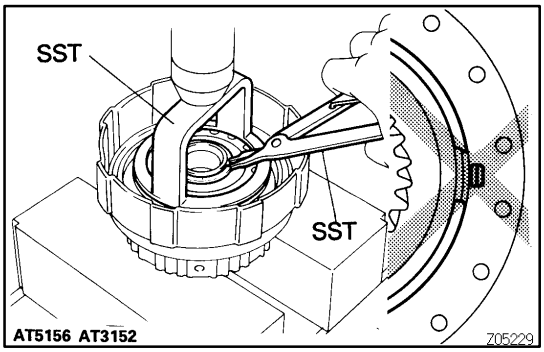

(b) Place SST on the spring retainer, and compress the return spring with a shop press.
SST 09350-30020 (09350-07040)

(c) Using SST, install the snap ring. Be sure the end gap of the snap ring is not aligned with the spring retainer claw.
SST 09350-30020 (09350-07070)

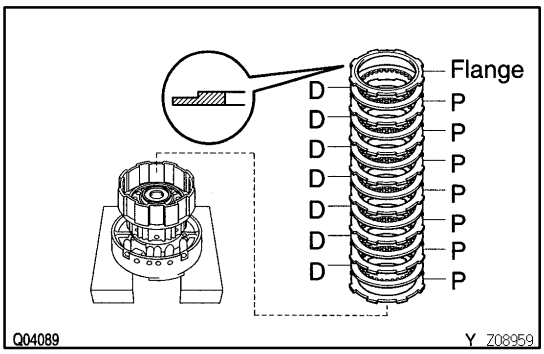

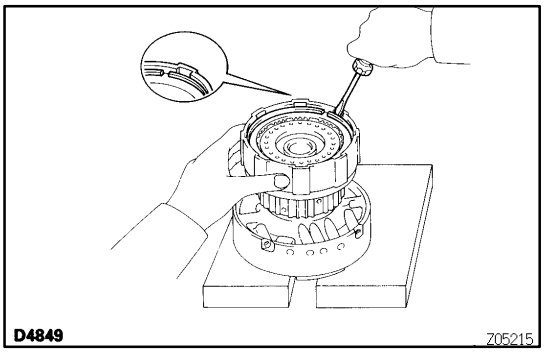

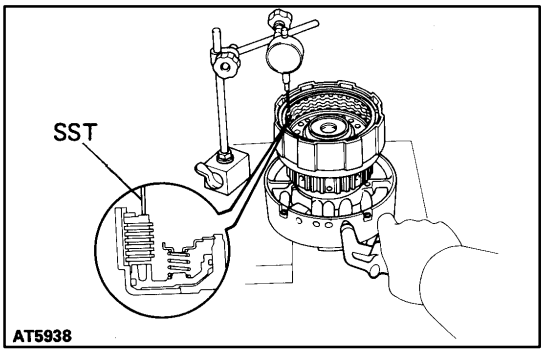

4. INSTALL PLATES, DISCS AND FLANGE

(a) Install the plate and discs.
Install in order: P = Plate D = Disc
P-D-P-D-P-D-P-D-P-D-P-D-P-D

(b) Then install the flange, the rounded edge facing downward.
HINT: There are 6 different flange thicknesses.
Flange thickness
mm (in.)

No.	Thickness	No.	Thickness
42	4.0 (0.157)	45	3.4 (0.134)
44	3.8 (0.150)	60	3.2 (0.126)
62	3.6 (0.142)	61	3.0 (0.118)

(c) Install the snap ring with a screwdriver. Be sure the end gap of the snap ring is not aligned with the cutout portion of the forward clutch drum.

5. CHECK PACK CLEARANCE OF FORWARD CLUTCH

Using SST and a dial indicator, measure the forward clutch pack clearance while applying and releasing compressed air (186-206 kPa, 1.9-2.1 kgf/cm^2, 27-30 psi).
SST 09350-30020 (09350-06120)
Pack clearance:
0.70-1.00 mm (0.0276-0.0394 in.)
If the pack clearance is less than the limit, parts may have been assembled incorrectly, check and reassemble again.

FRONT PLANETARY GEAR

AT0E4-02

COMPONENTS

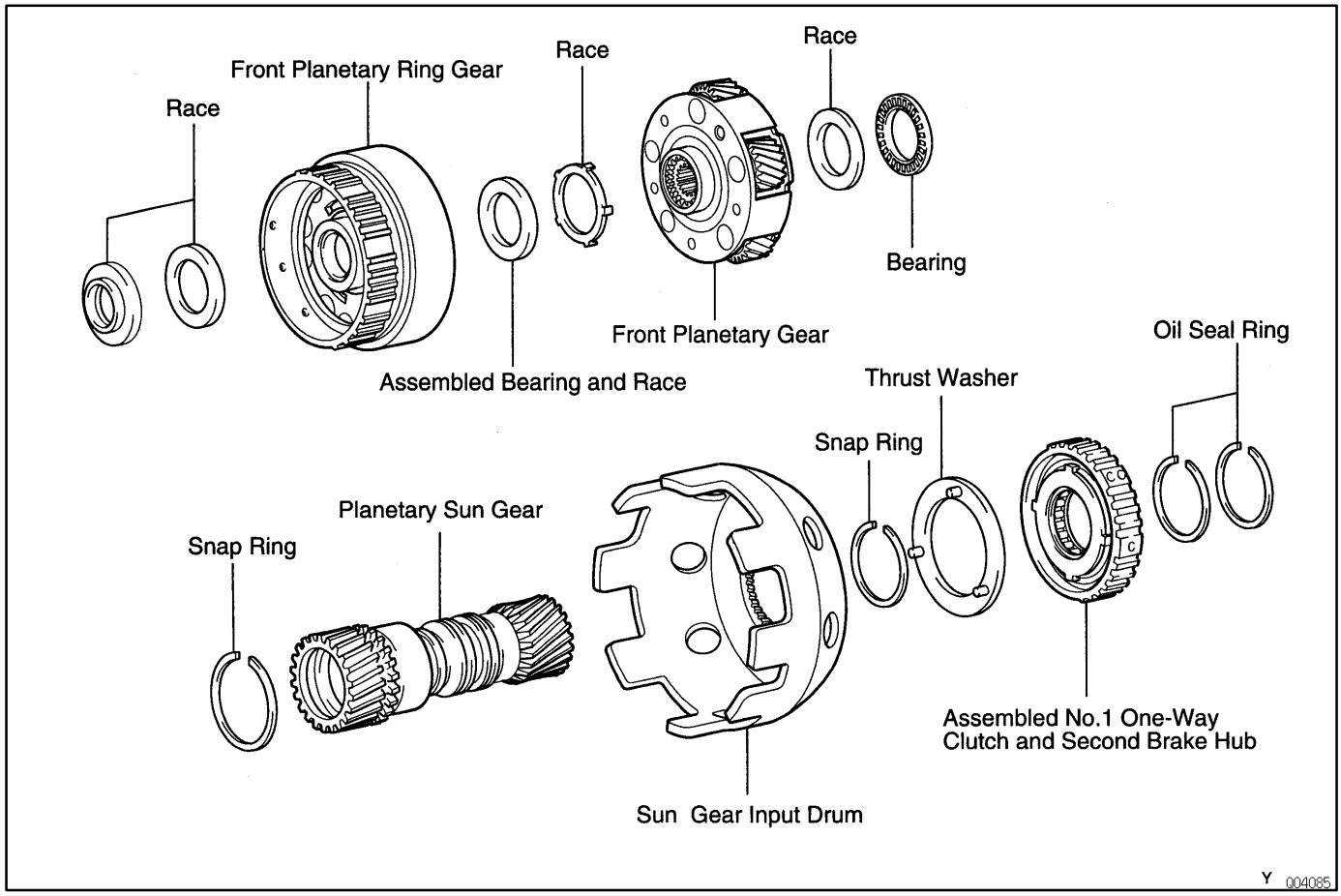

AT0E5-03

PLANETARY SUN GEAR AND NO.1 ONE-W AY CLUTCH DISASSEMBLY

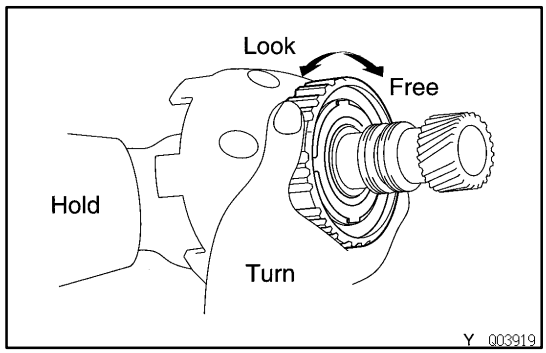

1. CHECK OPERATION OF NO.1 ONE-WAY CLUTCH

Hold the planetary sun gear and turn the second brake hub. Check that the second brake hub turns freely clockwise and locks counterclockwise.

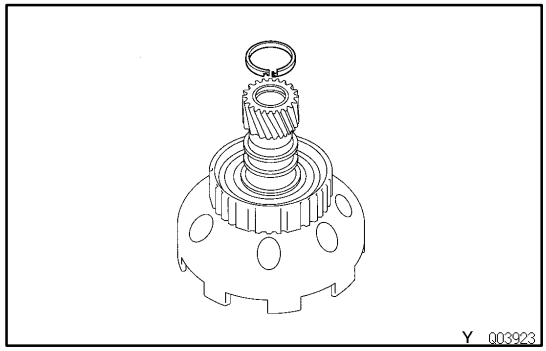

2. REMOVE 2 OIL SEAL RINGS

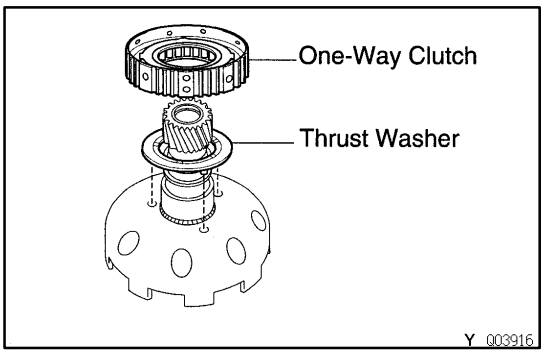

3. REMOVE NO.1 ONE- WAY CLUTCH AND THRUST WASHER FROM SUN GEAR INPUT DRUM

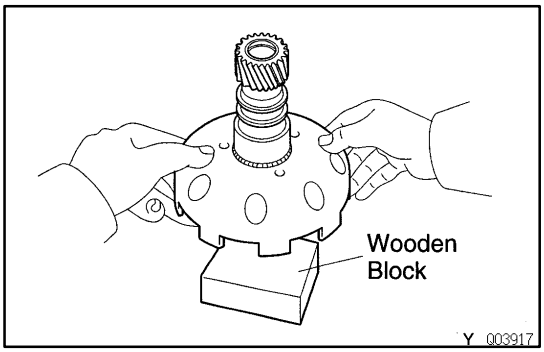

4. REMOVE SUN GEAR INPUT DRUM FROM PLANETARY SUN GEAR

(a) Use a wooden block, etc. as a work stand.

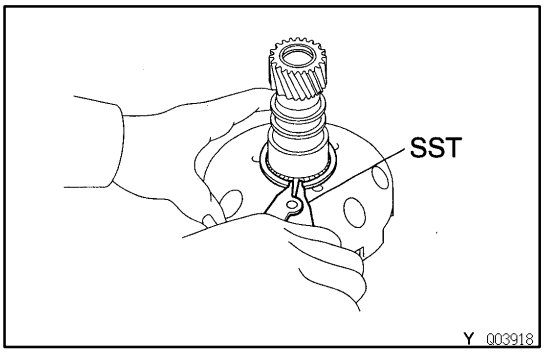

(b) Using SST, remove the snap ring.
SST 09350-30020 (09350-07070)

(c) Remove the sun gear input drum from the planetary sun gear.

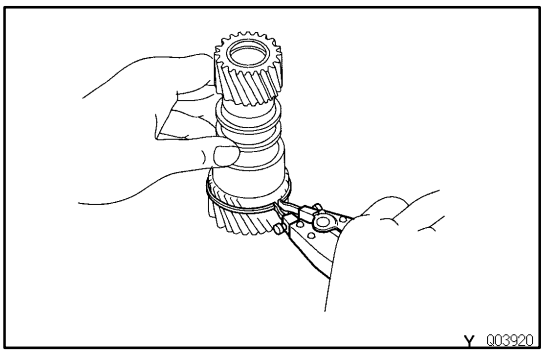

5. REMOVE SNAP RING FROM PLANETARY SUN GEAR

Using a snap ring expander, remove the snap ring from the planetary sun gear.

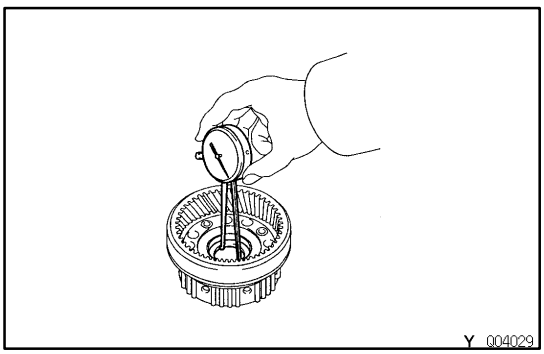

FRONT PLANETARY GEAR INSPECTION

AT0E6-03

1. CHECK FRONT PLANETARY RING GEAR BUSHING

Using dial indicator, measure the inside diameter of the planetary ring gear bushing.

Maximum inside diameter:

24.08 mm (0.9480 in.)

If the inside diameter is greater than the maximum, replace the planetary ring gear.

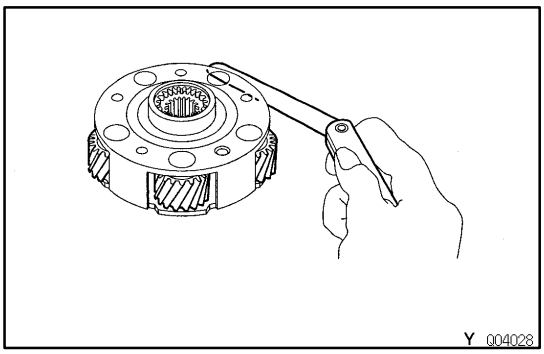

2. MEASURE PLANETARY PINION GEAR THRUST CLEARANCE

Using a feeler gauge, measure the planetary pinion gear thrust clearance.

Standard clearance:

0.2-0.6 mm (0.008-0.0024 in.)

Maximum clearance:

1.0 mm (0.039 in.)

If the clearance is greater than the maximum, replace the planetary gear assembly.

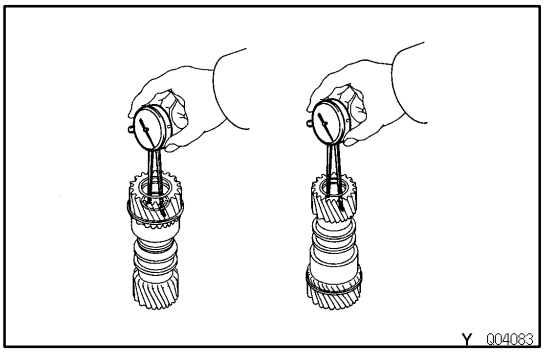

3. CHECK PLANETARY SUN GEAR BUSHINGS

Using a dial indicator, measure the inside diameter of the planetary ring gear bushing.

Maximum inside diameter:

27.08 mm (1.0661 in.)

If the inside diameter is greater then the maximum, replace the planetary sun gear.

AT0E7-05

PLANETARY SUN GEAR AND NO.1 ONE-WAY CLUTCH ASSEMBLY

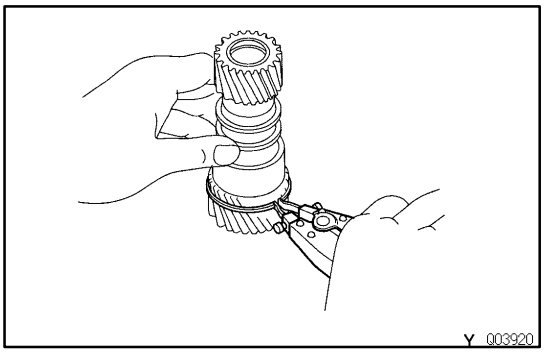

1. INSTALL SNAP RING TO PLANETARY SUN GEAR

Using a snap ring expander, remove the snap ring from the planetary sun gear.

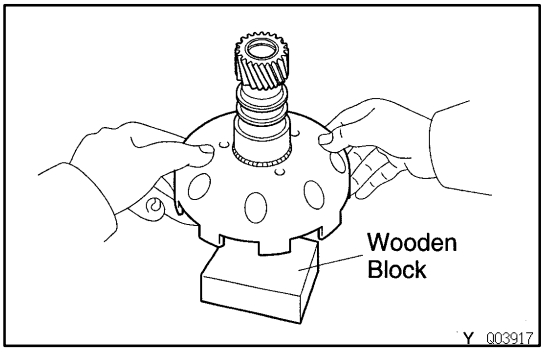

2. INSTALL SUN GEAR INPUT DRUM

(a) Use a wooden block, etc. as a work stand and place the planetary sun gear on it.

(b) Install the sun gear input drum onto the planetary sun gear.

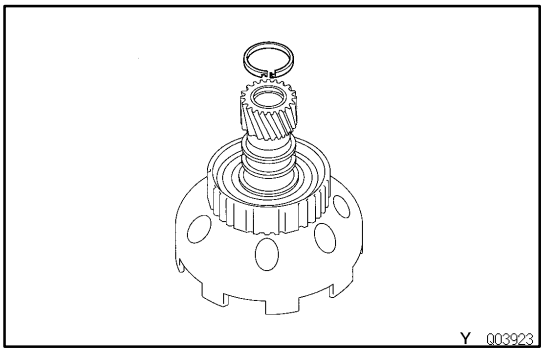

(c) Using SST, install the snap ring.
SST 09350-30020 (09350-07070)

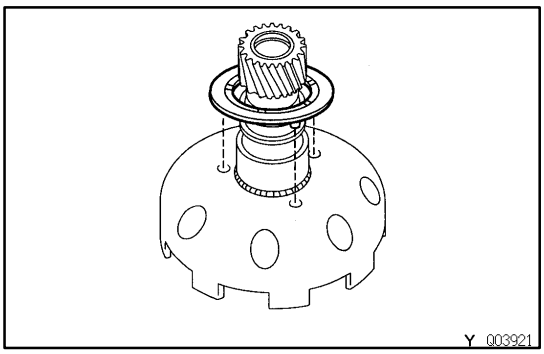

3. INSTALL THRUST WASHER ONTO PLANETARY SUN GEAR

HINT: Make sure that the lug shapes match the holes on the sun gear input drum.

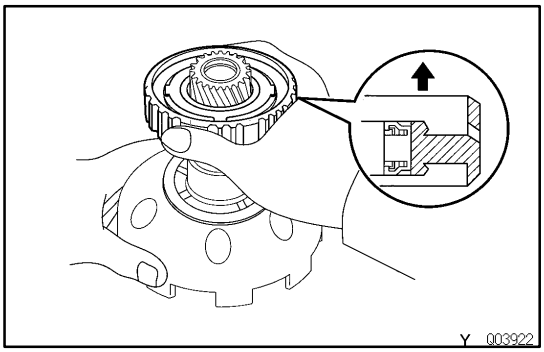

4. INSTALL ASSEMBLED NO.1 ONE-WAY CLUTCH AND SECOND BRAKE HUB ONTO PLANETARY SUN GEAR

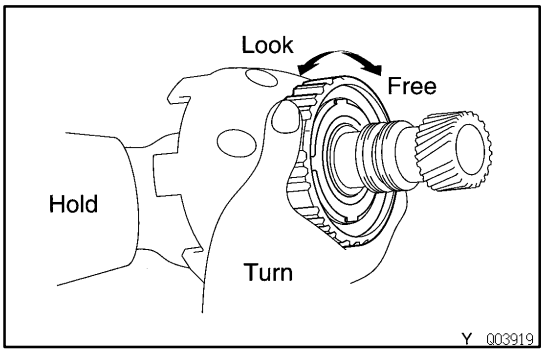

5. CHECK OPERATION OF NO.1 ONE-WAY CLUTCH

(a) Hold the planetary sun gear and turn the second brake hub.

(b) The second brake hub turns freely clockwise and locks counterclockwise.

(c) Remove the one-way clutch and second brake hub.

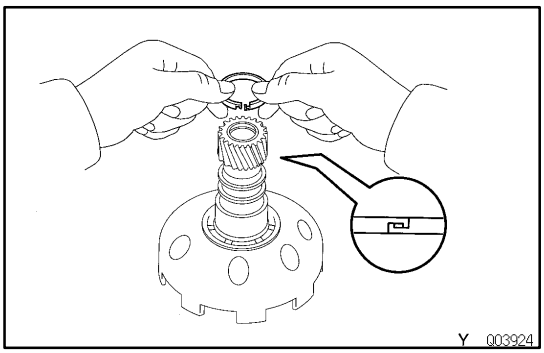

6. INSTALL OIL SEAL RINGS

(a) Coat the 2 oil seal rings with AFT.

(b) Install the 2 oil seal rings onto the planetary sun gear.

NOTICE: Do not spread the ring ends too much.

HINT: After installing the oil seal rings, check that they rotate smoothly.

SECOND BRAKE

AT0E8-02

COMPONENTS

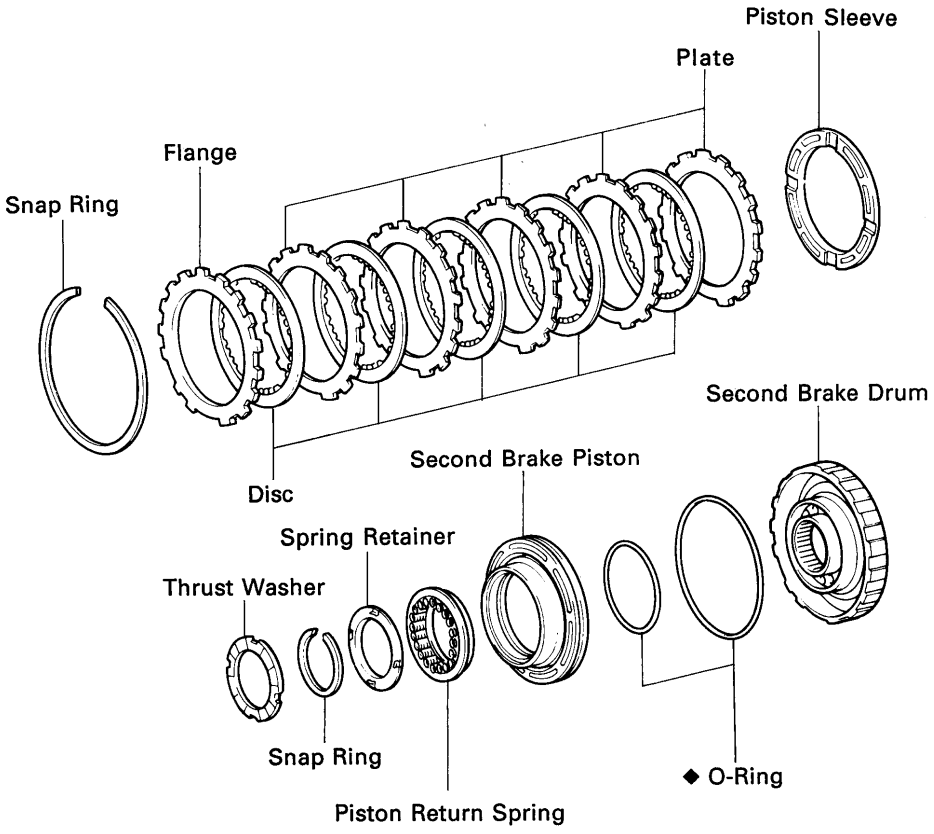

◆ Non-reusable part

AT5469

AT0E9-03

SECOND BRAKE DISASSEMBLY

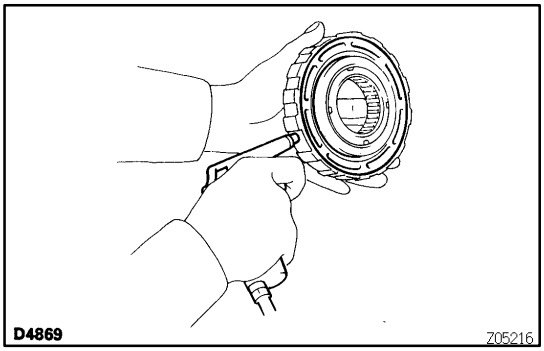

1. CHECK SECOND BRAKE PISTON MOVEMENT

Make sure the second brake piston moves smoothly while applying and releasing low-pressure compressed air to the second brake drum.

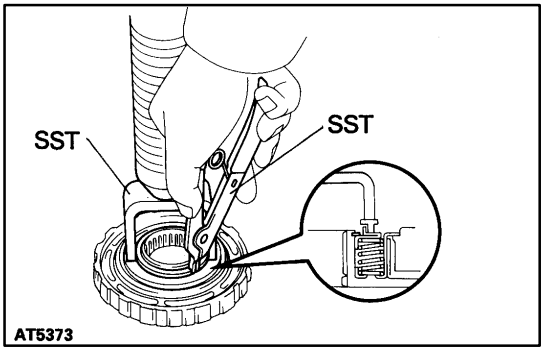

2. REMOVE PISTON RETURN SPRING

(a) Places SST on the spring retainer, and compress the return spring with a shop press.
SST 09350-30020 (09350-07040)

(b) Using SST, remove the snap ring.
SST 09350-30020 (09350-07070)

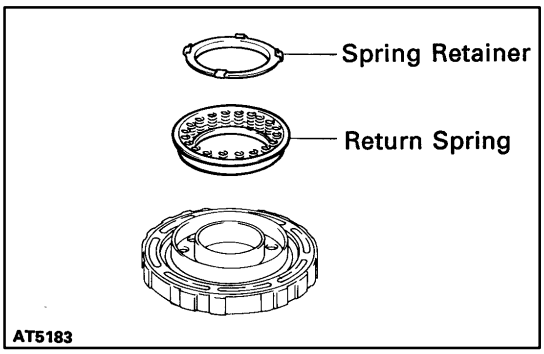

(c) Remove the spring retainer and piston return spring.

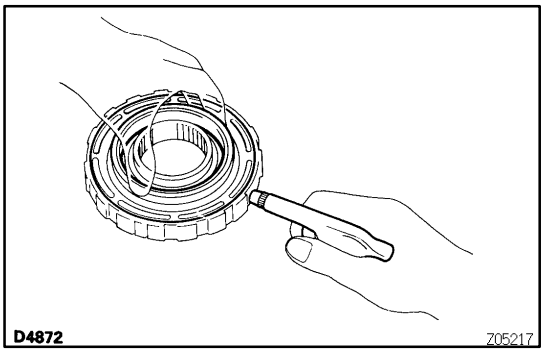

3. REMOVE SECOND BRAKE PISTON

(a) Hold the second brake piston with hand apply compressed air to the second brake drum to remove the second brake piston.

(b) Remove the second brake piston.
HINT: If the piston is at an angle and cannot be removed, press down on the side jutting out and again apply compressed air, or else wind vinyl tape around the piston end and remove it with needle nose pliers.

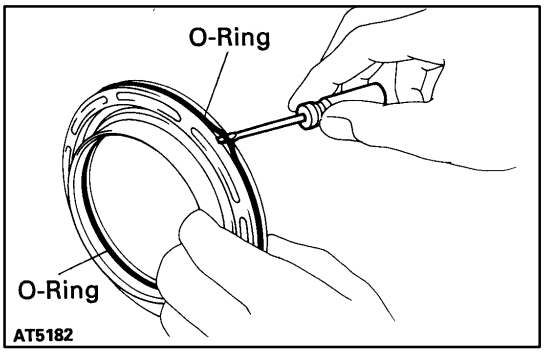

(c) Remove the 2 O-rings from the piston.

AT0EA-04

SECOND BRAKE INSPECTION

1. INSPECT DISC, PLATE AND FLANGE

Check to see if the sliding surface of the disc, plate and flange are worn or burnt.
If necessary, replace them.
HINT:

★ If the lining of the disc is peeling off or discolored, or even if a part of the printed numbers are defaced, replace all discs.

★ Before assembling new discs, soak them in ATF for at least 15 minutes.

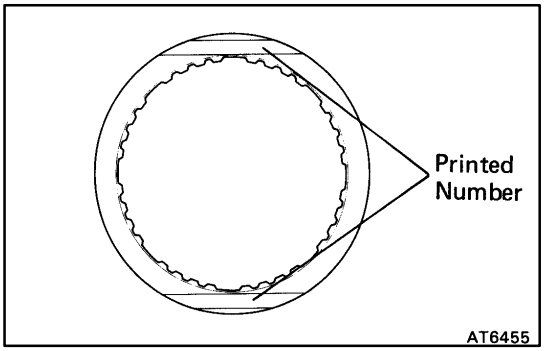

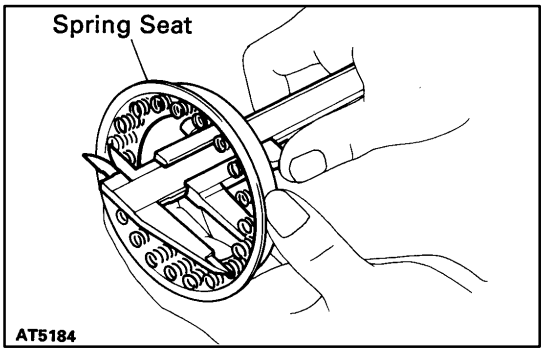

2. CHECK PISTON RETURN SPRING

Check the return spring free length together with the spring test.

Standard free length:

19.64 mm (0.7732 in.)

AT0EB-03

SECOND BRAKE ASSEMBLY

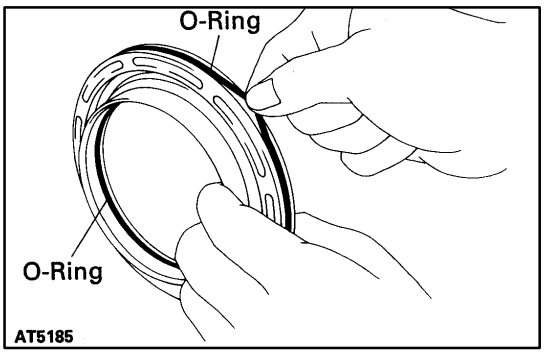

1. INSTALL SECOND BRAKE PISTON

(a) Coat 2 new O-rings with ATF and install them on second brake piston.

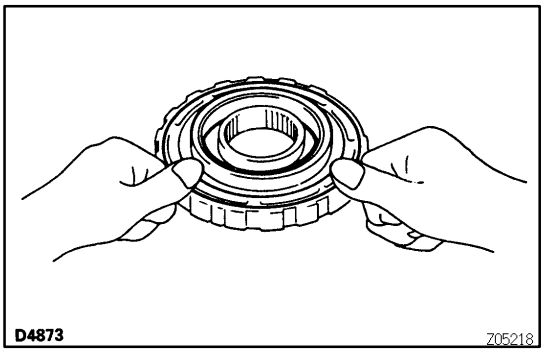

(b) Being careful not to damage the O-rings, press the second brake piston into the second brake drum with both hands.

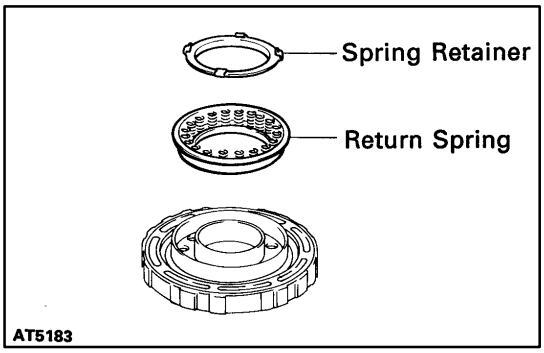

2. INSTALL PISTON RETURN SPRINGS

(a) Install the piston return spring.

(b) Install the spring retainer.

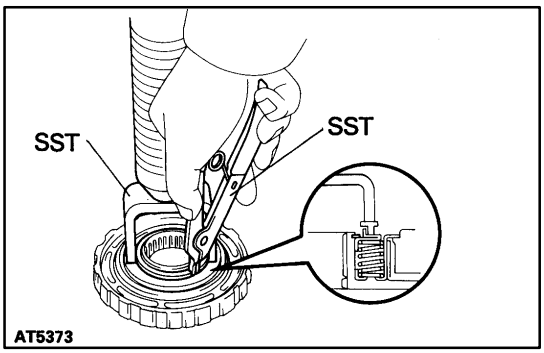

(c) Place SST on the spring retainer, and compress the return spring with a shop press.
SST 09350-30020 (09350-07040)

(d) Using SST, install the snap ring.
SST 09350-30020 (09350-07070)

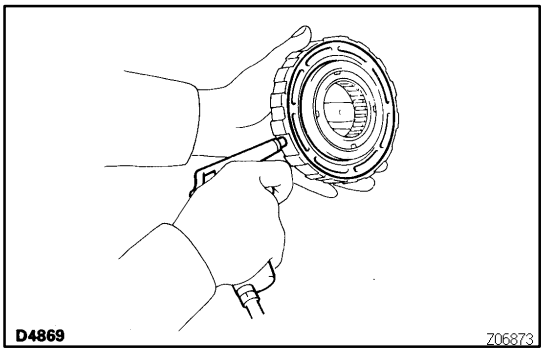

3. CHECK SECOND BRAKE PISTON MOVEMENT

Make sure the second brake piston moves smoothly when applying and releasing low-pressure compressed air to the second brake drum.

REAR PLANETARY GEAR

AT0EC-02

COMPONENTS

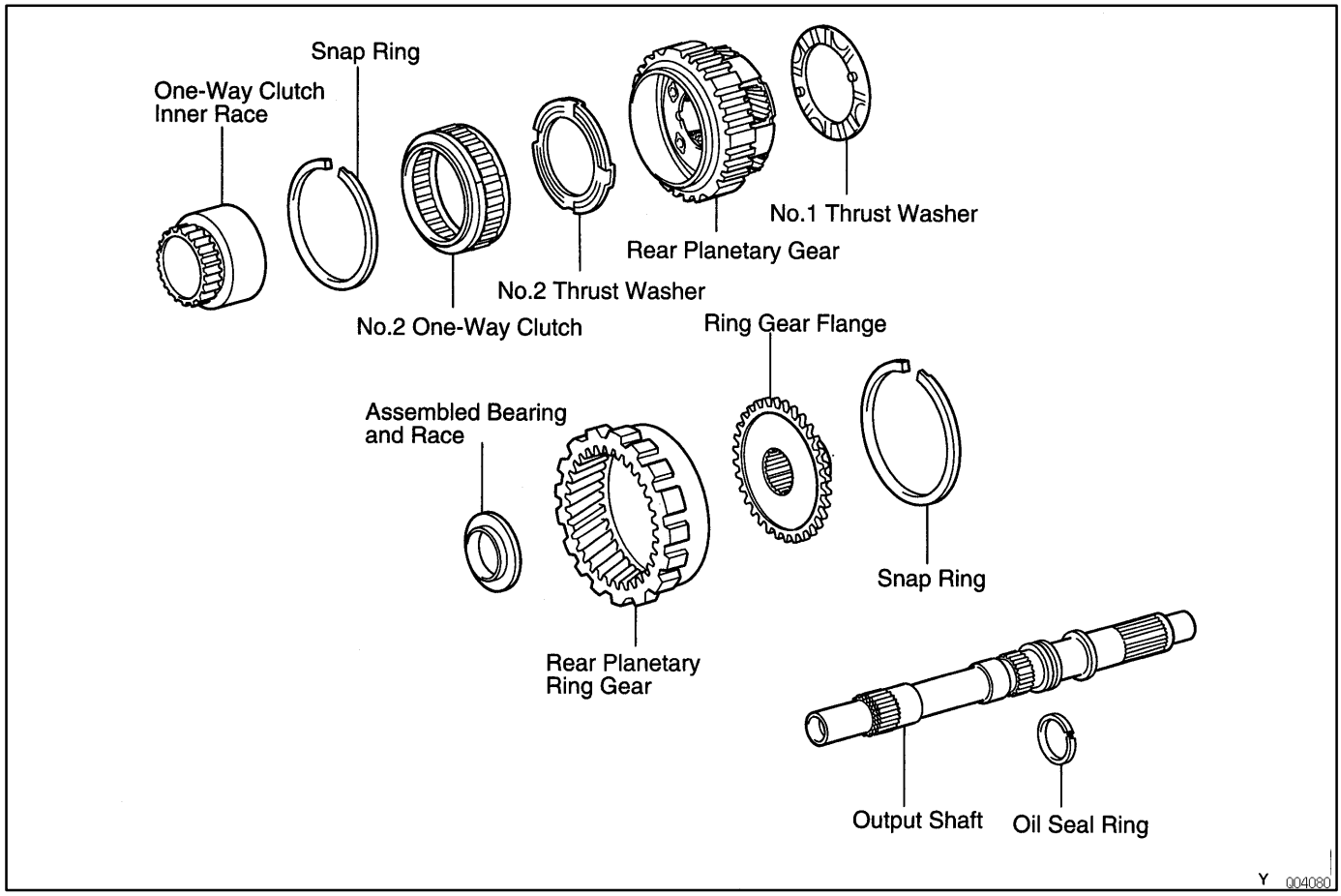

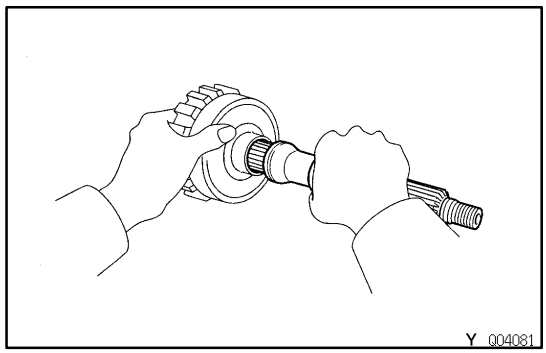

AT0ED-04

REAR PLANETARY GEAR, NO.2 ONE-WAY CLUTCH AND OUTPUT SHAFT DISASSEMBLY

1. REMOVE OUTPUT SHAFT FROM REAR PLANETARY GEAR ASSEMBLY

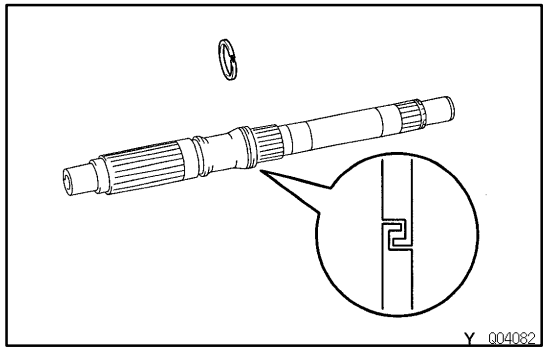

2. REMOVE OIL SEAL RING FROM OUTPUT SHAFT

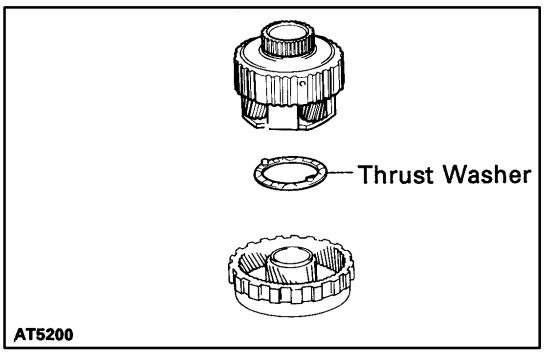

3. REMOVE REAR PLANETARY GEAR FROM REAR PLANETARY RING GEAR

(a) Remove the No.1 thrust washer from the rear planetary gear.

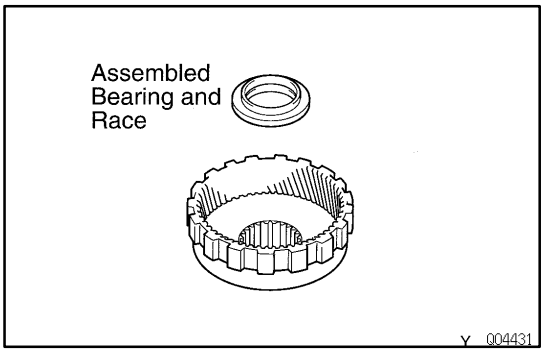

(b) Remove the assembled bearing and race from the rear planetary ring gear.

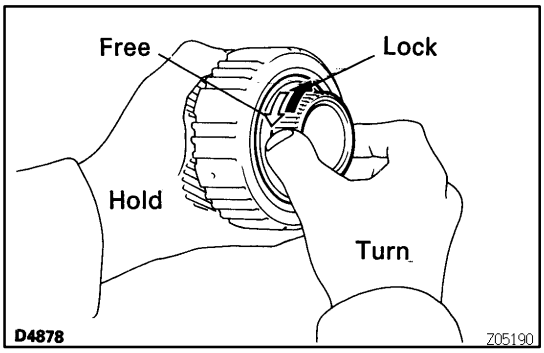

4. CHECK OPERATION OF NO.2 ONE-WAY CLUTCH

Hold the planetary gear and turn the one-way clutch inner race. The one-way clutch inner race must be able to turn freely counterclockwise and locks clockwise.

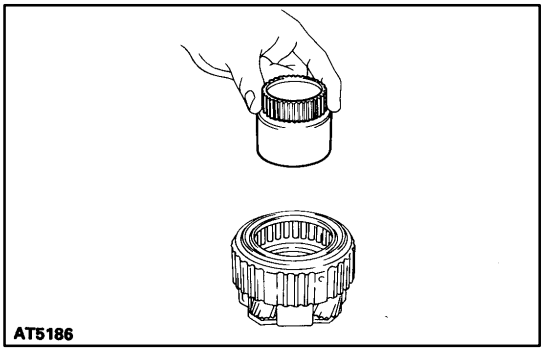

5. REMOVE NO.2 ONE-WAY CLUTCH

(a) Remove the one-way clutch inner race from the rear planetary gear.

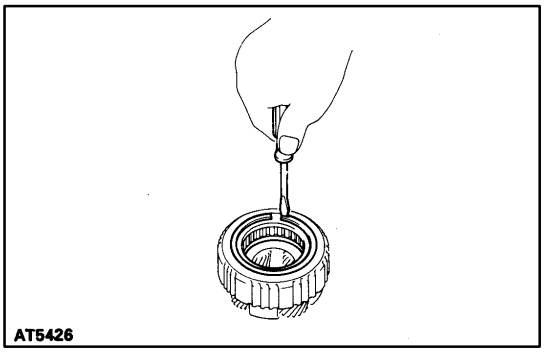

(b) Using a screwdriver, remove the snap ring.

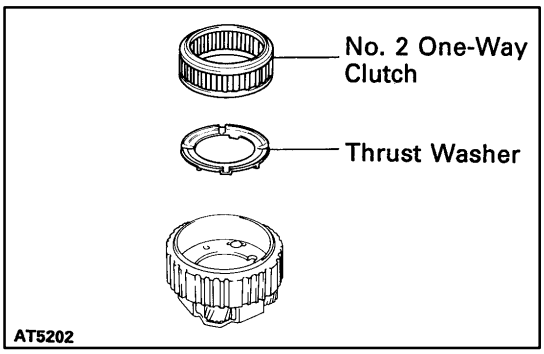

(c) Remove No.2 one-way clutch with retainers and No.2 thrust washer from the planetary gear.

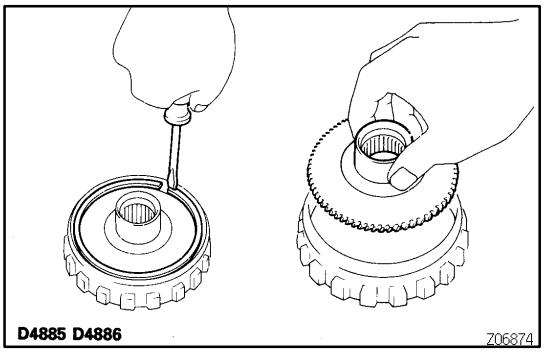

6. REMOVE RING GEAR FLANGE

(a) Using a screwdriver, remove the snap ring.

(b) Remove the ring gear flange.

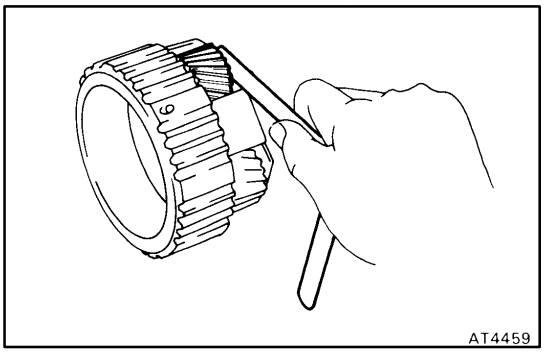

REAR PLANETARY GEAR INSPECTION

AT0EE-03

MEASURE PLANETARY PINION GEAR THRUST CLEARANCE

Using a feeler gauge, measure the planetary pinion gear thrust clearance.

Standard clearance:

0.2-0.6 mm (0.008-0.024 in.)

Maximum clearance:

1.0 mm (0.039 in.)

If the clearance is greater than the maximum, replace the planetary gear assembly.

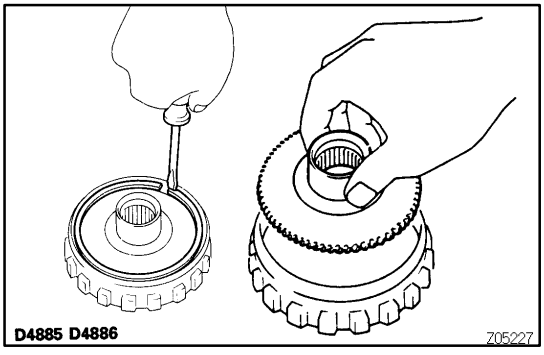

REAR PLANETARY GEAR, NO.2 ONE-WAY CLUTCH AND OUTPUT SHAFT ASSEMBLY

AT0EF-04

1. INSTALL RING GEAR FLANGE

(a) Install the ring gear flange.

(b) Using a screwdriver, install the snap ring.

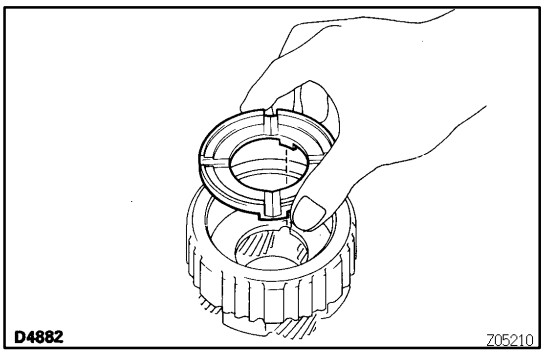

2. INSTALL NO.2 THRUST WASHER

(a) Coat the thrust washer with petroleum jelly.

(b) Install the thrust washer onto the rear planetary gear.
HINT: Make sure that the lug shapes match the cutout portions on the rear planetary gear.

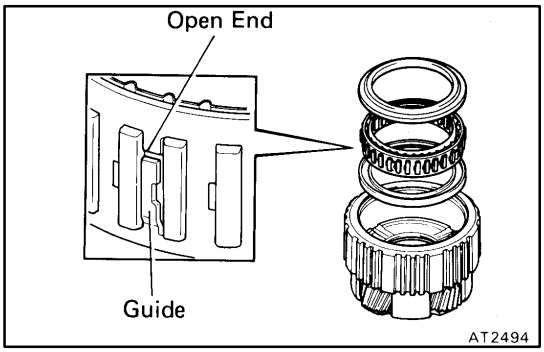

3. INSTALL NO.2 ONE-WAY CLUTCH

(a) Install the one-way clutch and 2 retainers into the rear planetary gear, as shown.
HINT: Make sure that the open ends of the guides on the one-way clutch face upward.

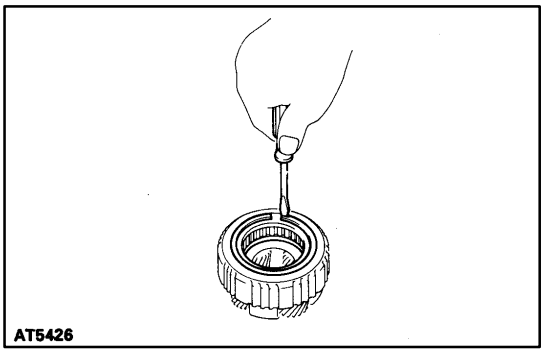

(b) Using a screwdriver, install the snap ring.

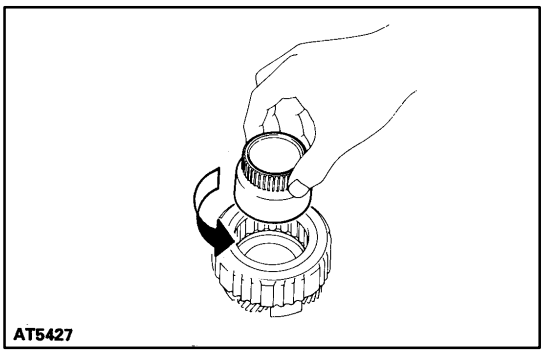

(c) While turning it counterclockwise, install the one-way clutch inner race to the rear planetary gear.

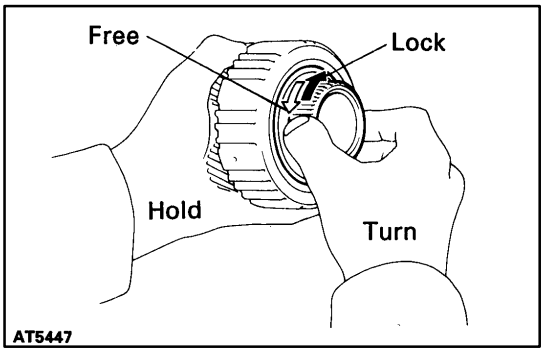

4. CHECK OPERATION OF NO.2 ONE-WAY CLUTCH

Hold the planetary gear and turn the one-way clutch inner race. The one-way clutch inner race turns freely counter-clockwise and locks clockwise.

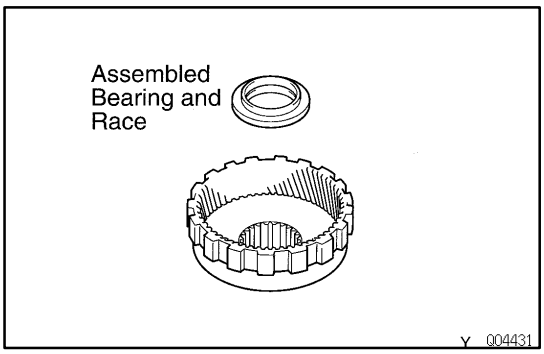

5. INSTALL ASSEMBLED BEARING AND RACE

Coat the assembled bearing and race with petroleum jelly, and install them and sun gear onto the rear planetary ring gear.

Assembled bearing and race diameter

mm (in.)

	Inside	Outside
Assembled bearing and race	54.5 (2.146)	27.6 (1.087)

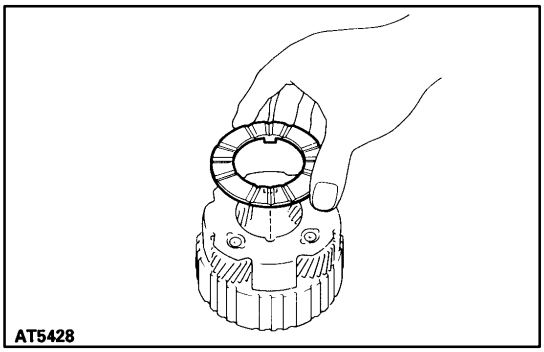

6. INSTALL NO.1 THRUST WASHER

Coat the No.1 thrust washer with petroleum jelly, and install it from the rear planetary gear.

HINT: Make sure that the lug shapes match the cutout portions on the rear planetary gear.

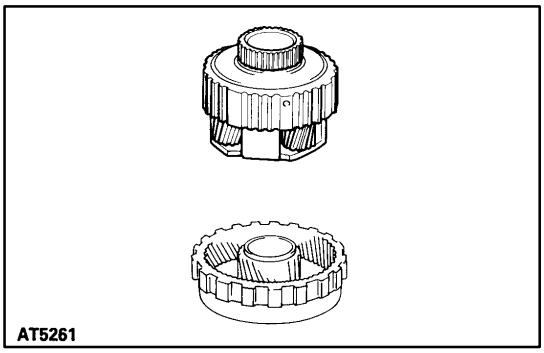

7. INSTALL REAR PLANETARY GEAR ONTO REAR PLANETARY RING GEAR

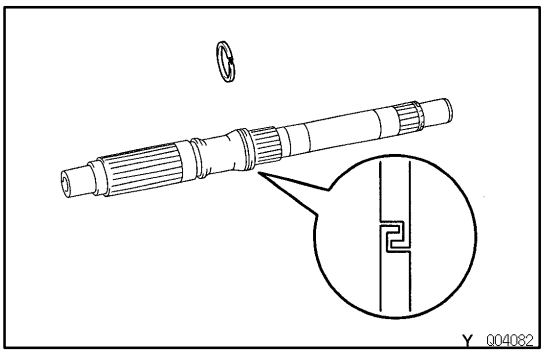

8. INSTALL OIL SEAL RING

Coat the oil seal ring with ATF and install them to the output shaft.

NOTICE: Do not spread the ring ends too much.

HINT: After installing the oil seal rings, check that they rotate smoothly.

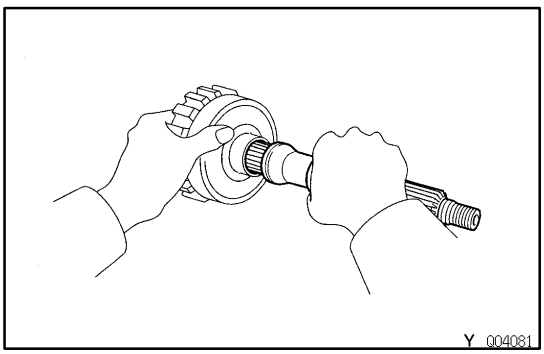

9. INSTALL OUTPUT SHAFT INTO REAR PLANETARY GEAR ASSEMBLY

FIRST AND REVERSE BRAKE

AT0EG-02

COMPONENTS

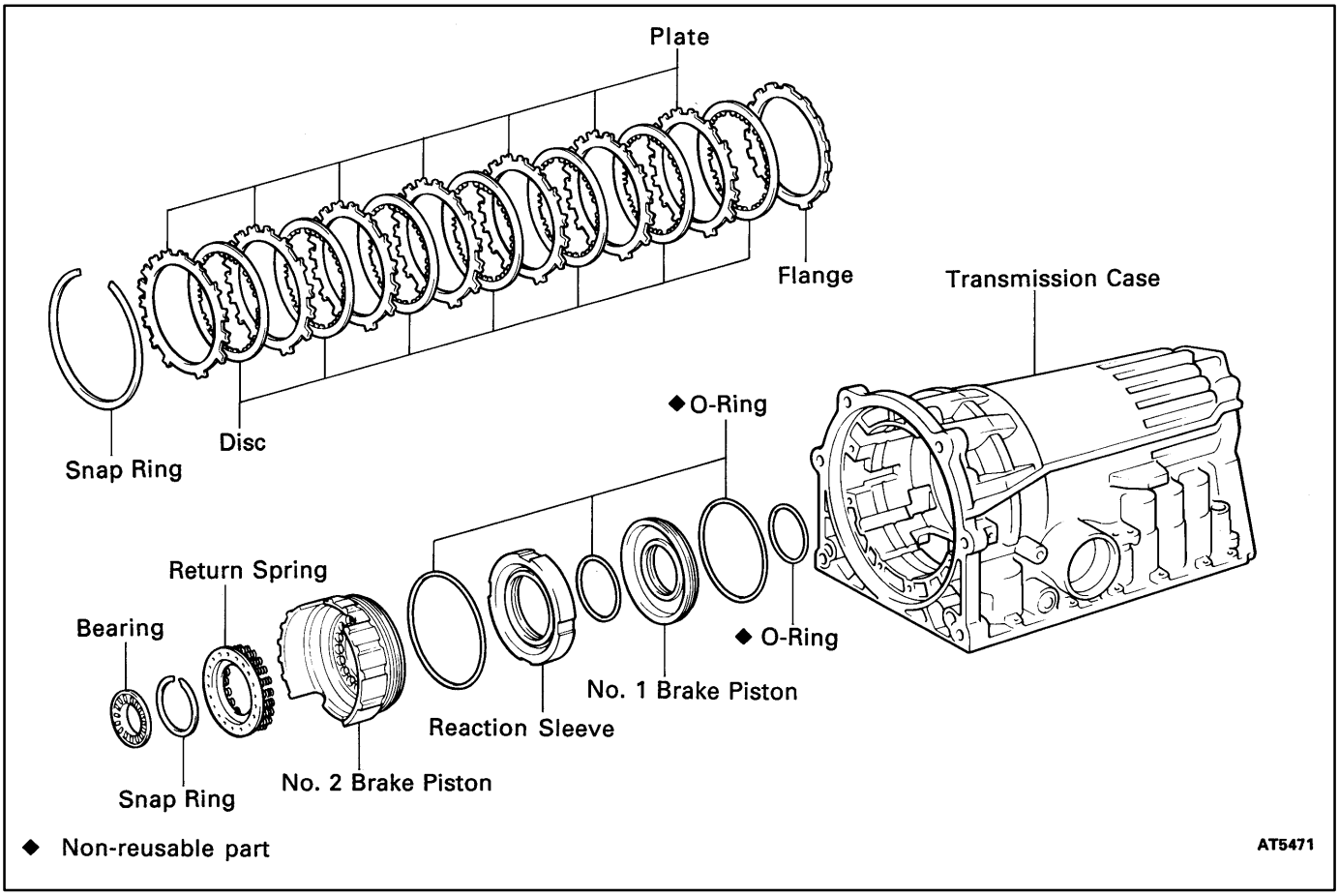

AT0EH-03

FIRST AND REVERSE BRAKE

DISASSEMBLY

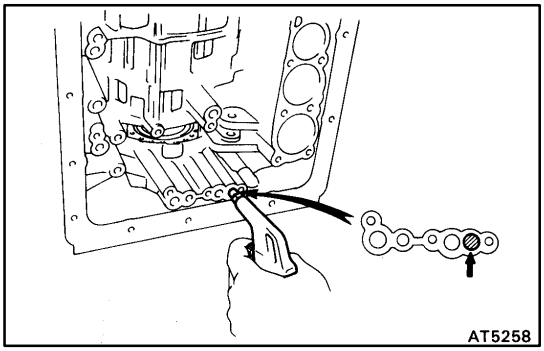

1. CHECK PISTON STROKE OF FIRST AND REVERSE BRAKE

Make sure the first and reverse brake pistons move smoothly when applying and releasing the compressed air into the transmission case.

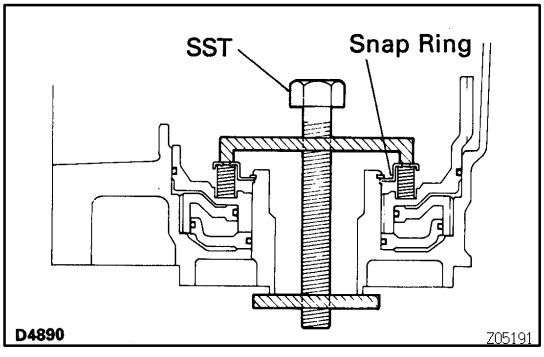

2. REMOVE PISTON RETURN SPRING

(a) Place SST on the spring retainer and compress the return spring.
SST 09350-30020 (09350-07050)

(b) Using SST, remove the snap ring.
SST 09350-30020 (09350-07070)

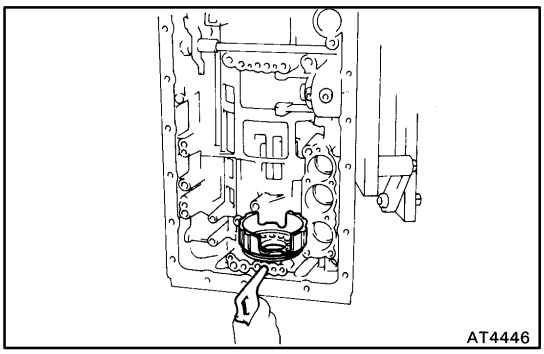

3. REMOVE NO.2 BRAKE PISTON

(a) Hold No.2 brake piston with hand, apply compressed air to transmission case to remove No.2 brake piston.
HINT: If the piston does not pop out with compressed air, lift the piston out with needle-nose pliers.

(b) Remove the O-ring from No.2 brake piston.

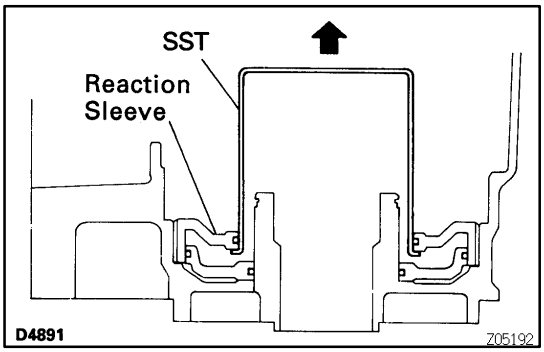

4. REMOVE REACTION SLEEVE

(a) Using SST, remove the reaction sleeve.
SST 09350-30020 (09350-07080)

(b) Remove the O-ring from the reaction sleeve.

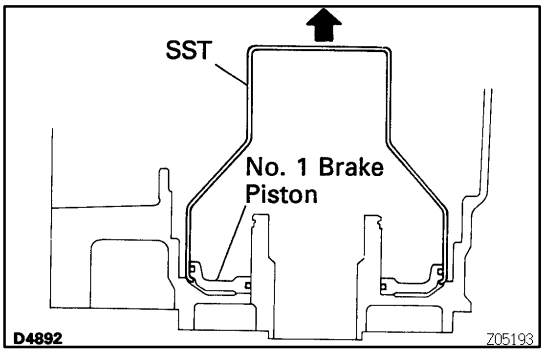

5. REMOVE NO.1 BRAKE PISTON

(a) Using SST, remove the No.1 brake piston.
SST 09350-30020 (09350-07090)

(b) Remove the 2 O-rings from the No.1 piston.

FIRST AND REVERSE BRAKE INSPECTION

AT0EJ-04

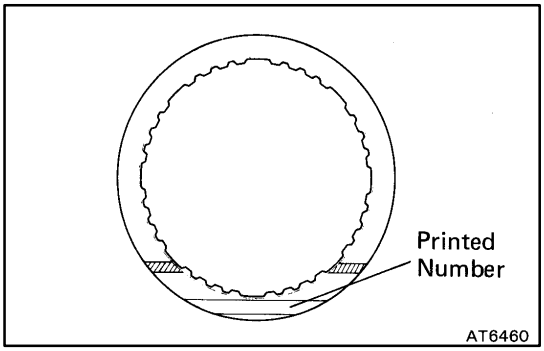

1. CHECK DISC, PLATE AND FLANGE

Check to see if the sliding surface of the disc, plate and flange are worn or burnt. If necessary, replace them.
HINT:

★ If the lining of the disc is peeling off or discolored, or even if a part of the printed numbers are defaced, replace all discs.

★ Before assembling new discs, soak them in ATF for at least 15 minutes.

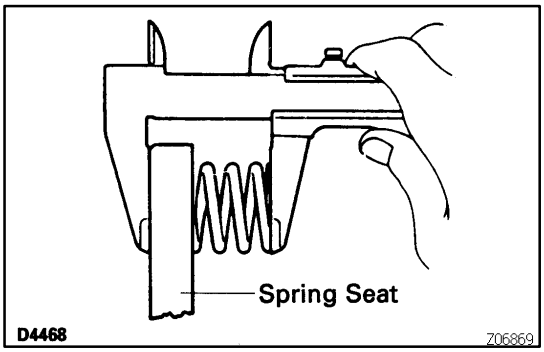

2. CHECK PISTON RETURN SPRING

Check the return spring free length together with the spring seat.

Standard free length:

12.9 mm (0.508 in.)

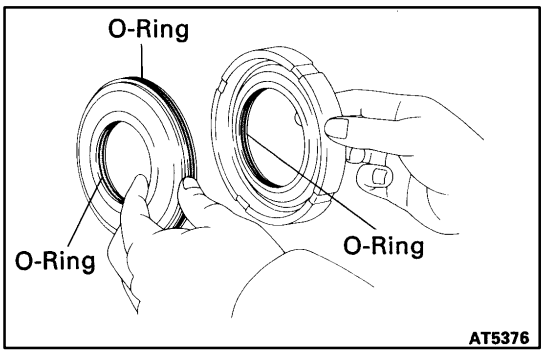

FIRST AND REVERSE BRAKE ASSEMBLY

AT0EK-03

1. INSTALL NO.1 BRAKE PISTON

(a) Coat the 3 new O-rings with ATF.
(b) Install the 2 O-rings on No.1 brake piston.
(c) Install the O-ring on the reaction sleeve.
(d) Install the No.1 brake piston to the reaction sleeve.

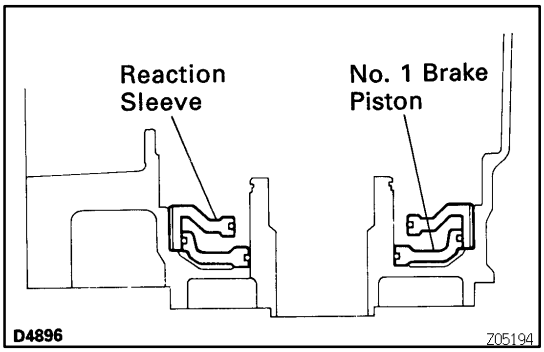

2. INSTALL REACTION SLEEVE AND NO.1 BRAKE PISTON TO TRANSMISSION CASE

With the No.1 brake piston underneath (the rear side), install the brake reaction sleeve and No.1 brake piston to the transmission case.

NOTICE: Be careful not to damage the O-rings.

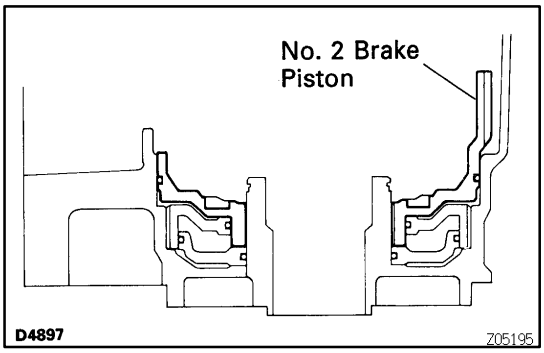

3. INSTALL NO.2 BRAKE PISTON

(a) Coat the a new O-ring with ATF.
(b) Install the O-ring on No.2 brake piston.
(c) With the spring seat of the piston upwards (the front side), place the piston in the transmission case.

NOTICE: Be careful not to damage the O-rings.

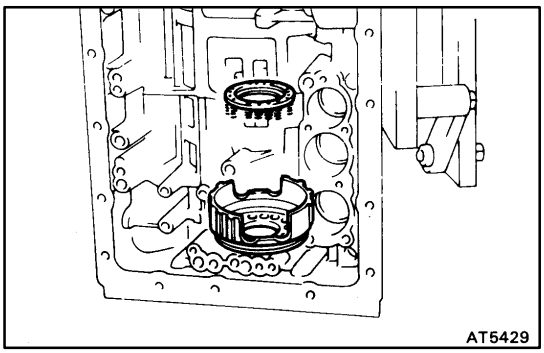

(d) Place the piston return spring onto the No.2 brake piston.

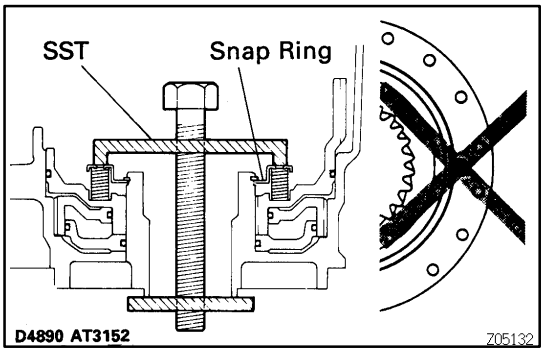

4. INSTALL PISTON RETURN SPRING

(a) Place SST on the spring retainer and compress the return spring.
SST 09350-30020 (09350-07050)
(b) Using SST, install the snap ring.
SST 09350-30020 (09350-07070)

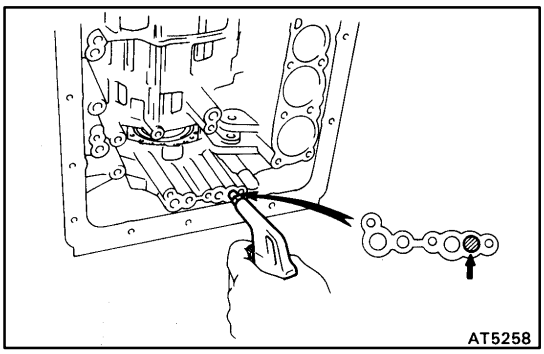

5. CHECK PISTON STROKE OF FIRST AND REVERSE BRAKE

Make sure the first and reverse brake pistons move smoothly when applying and releasing the compressed air into the transmission case.

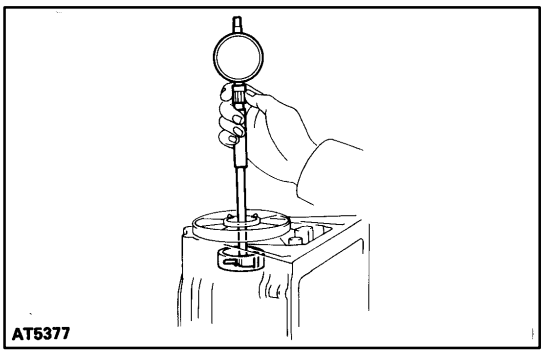

TRANSMISSION CASE

AT0EL-03

TRANSMISSION CASE INSPECTION

INSPECT TRANSMISSION CASE BUSHING

Using a cylinder gauge, measure the inside diameter of the transmission case rear bushing.

Maximum inside diameter:

38.18 mm (1.5031 in.)

If the inside diameter is greater than the maximum, replace the transmission case.

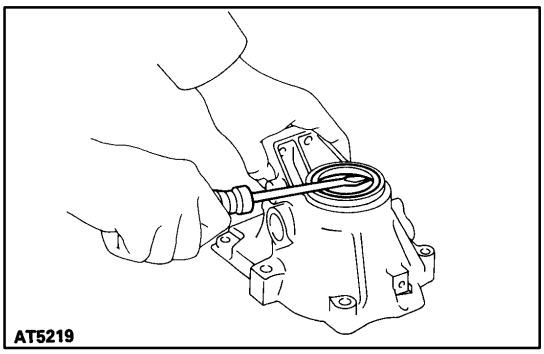

EXTENSION HOUSING

AT0EM-03

EXTENSION HOUSING DISASSEMBLY

1. REMOVE OIL SEAL FROM EXTENSION HOUSING

Using a screwdriver, remove the oil seal.

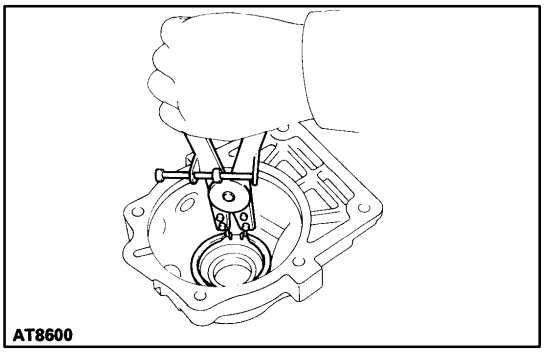

2. REMOVE EXTENSION HOUSING BEARING

(a) Using a snap ring expander, remove the snap ring.

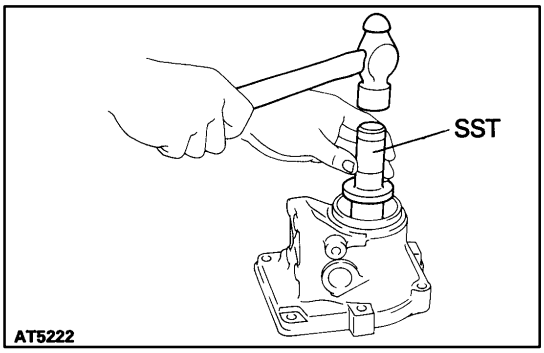

(b) Using SST, drive out the bearing.
SST 09325-12010

AT0EN-03

EXTENSION HOUSING ASSEMBLY

1. INSTALL EXTENSION HOUSING BEARING

(a) Using SST, drive in the bearing.
SST 09350-30020 (09350-32140)

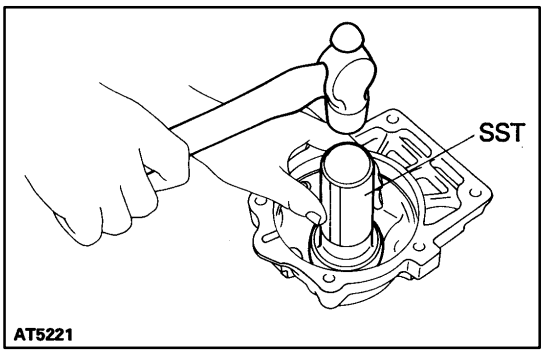

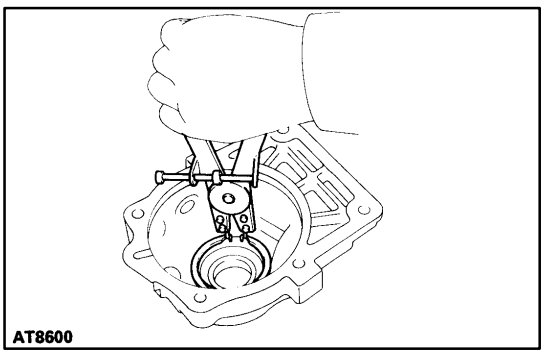

(b) Using a snap ring expander, install the snap ring.

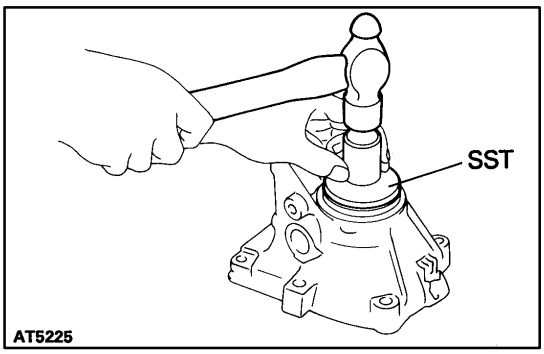

2. INSTALL OIL SEAL TO EXTENSION HOUSING

Using SST, install a new oil seal.

SST 09325-40010

VALVE BODY
COMPONENTS

AT0EP-02

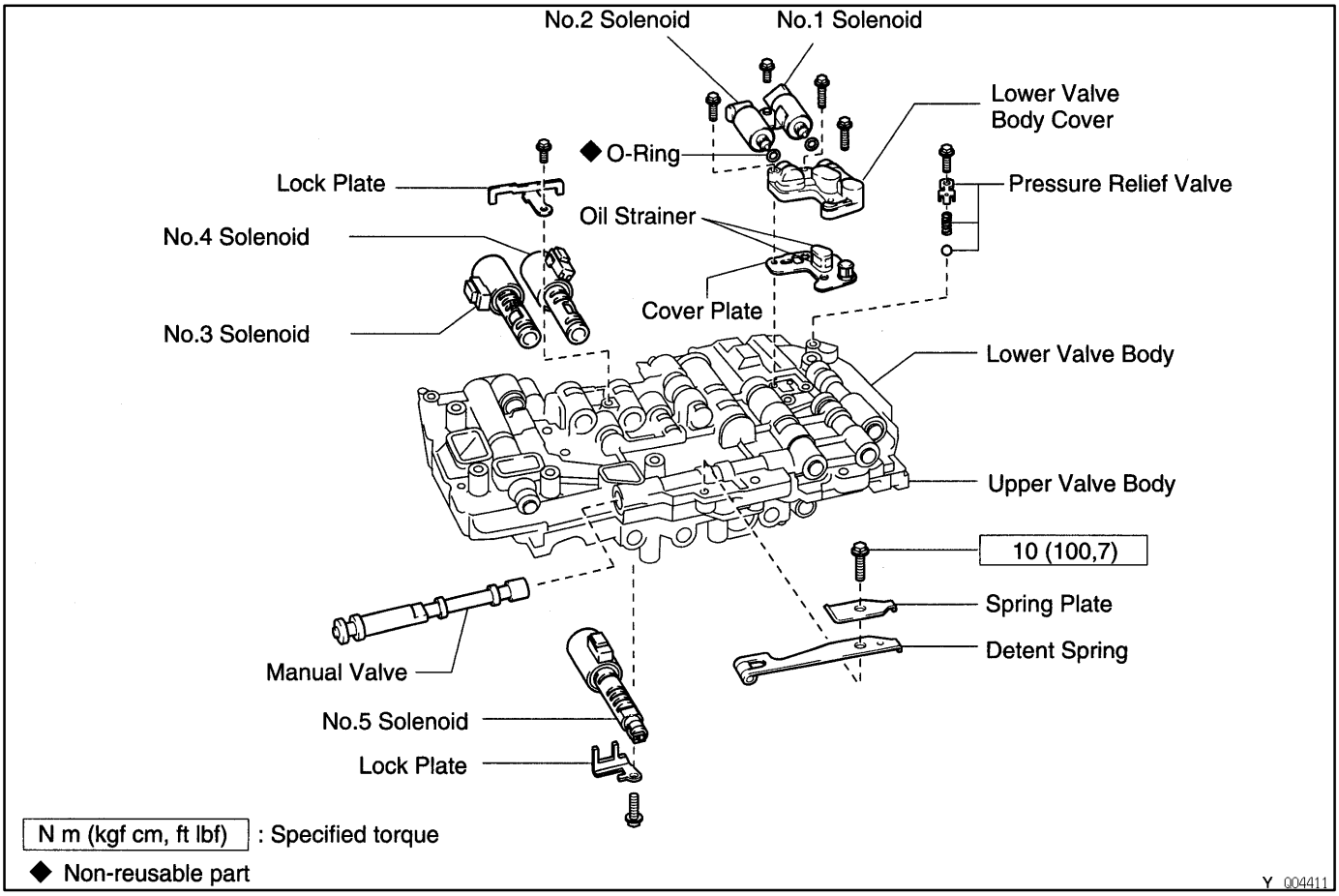

AT0PU-02

VALVE BODY DISASSEMBLY

1. REMOVE DETENT SPRING AND SPRING PLATE

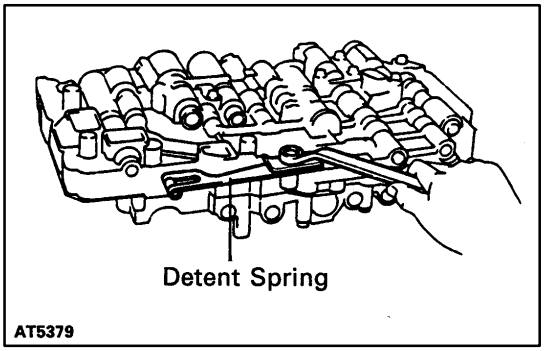

2. REMOVE MANUAL VALVE

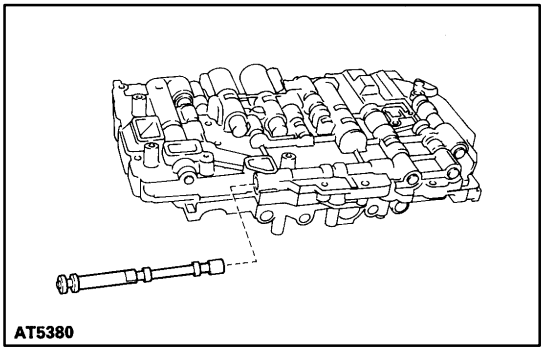

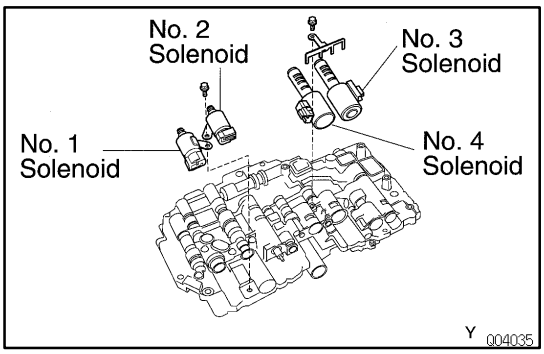

3. REMOVE 4 SOLENOIDS

(a) Remove No.1 and No.2 solenoids.
(b) Remove the O-ring from No.1 and No.2 solenoids.
(c) Remove the lock plate and No.3 and No.4 solenoids.

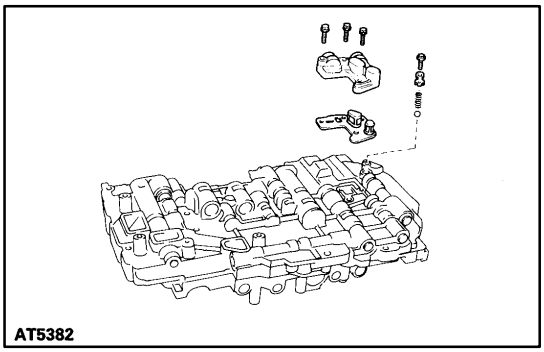

4. REMOVE OIL STRAINER AND PRESSURE RELIEF VALVE

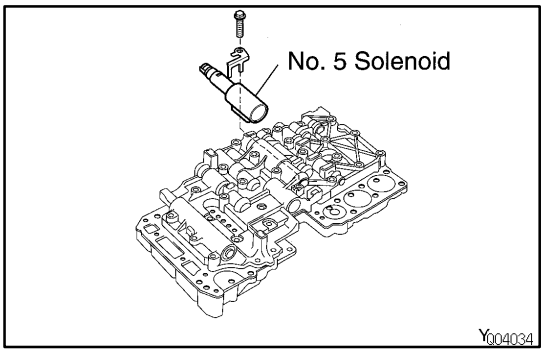

5. TURN OVER ASSEMBLY AND REMOVE NO.5 SOLENOID VALVE

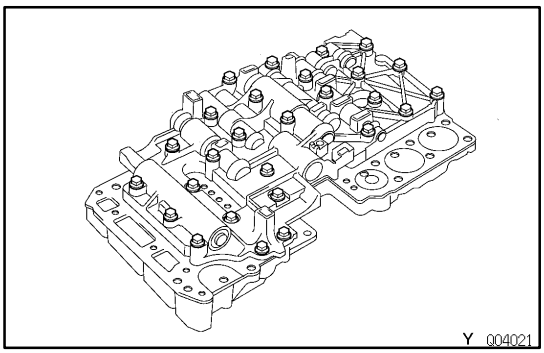

6. REMOVE 28 BOLTS

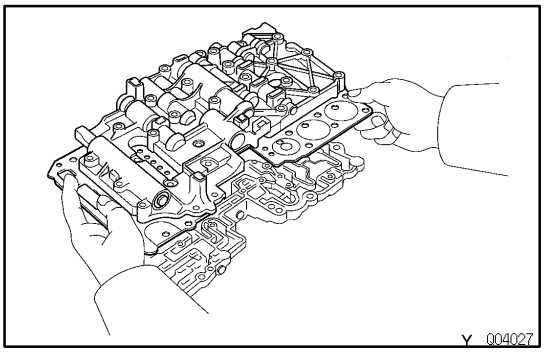

7. LIFT OFF UPPER VALVE BODY AND PLATE

UPPER VALVE BODY

AT0ER-02

COMPONENTS

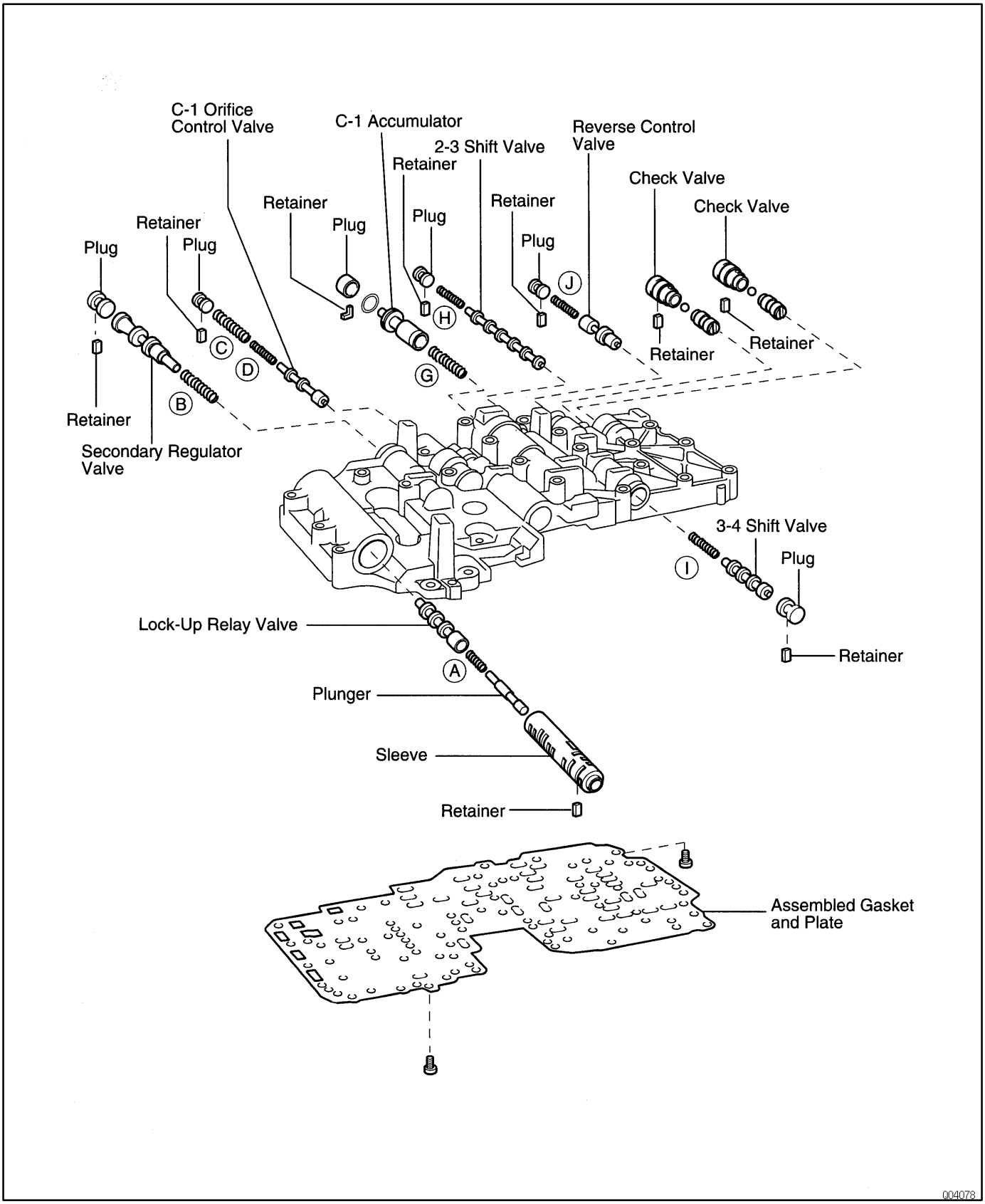

AT0ES-04

VALVE BODY SPRING SPECIFICATIONS

HINT: During reassembly please refer to the spring specifications below to help you to differentiate the different springs.

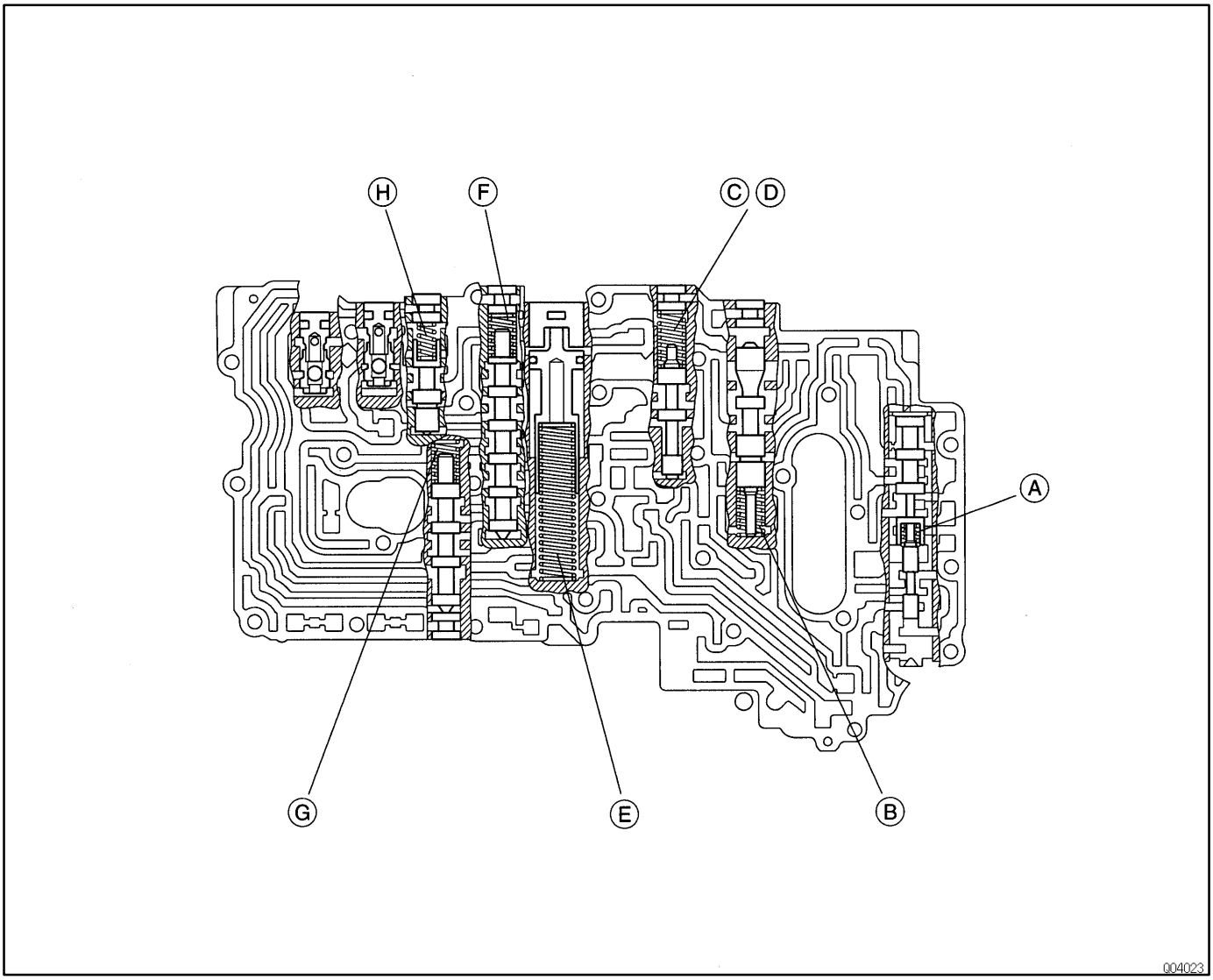

Mark	Name (Color)	Free length / Outer diameter mm (in.)	Total No. of coils
(A)	Lock-up relay valve (Red)	23.42 (0.9220) / 5.86 (0.2307)	12.25
(B)	Secondary regulator valve (Blue)	32.79(1.2909) / 9.4 (0.3700)	12.75
(C)	C_1 Orifice control valve (White)	37.13 (1.4618) / 11.14 (0.4316)	11.25
(D)	C_1 Orifice control valve (None)	21.50 (0.8465) / 7.76 (0.3055)	11.50
(E)	C_1 Accumulator (Pink)	75.26 (2.9623) / 15.02 (0.5193)	17.06
(F)	2-3 Shift valve (Purple)	30.77 (1.2114) / 9.70 (0.3819)	10.50
(G)	3-4 Shift valve (Purple)	30.77 (1.2114) / 9.70 (0.3819)	10.50
(H)	Reverse control valve (None)	25.58 (1.0070) / 8.64 (0.3402)	8.75

AT0ET-04

RETAINERS AND CHECK BALLS LOCATION

1. RETAINERS

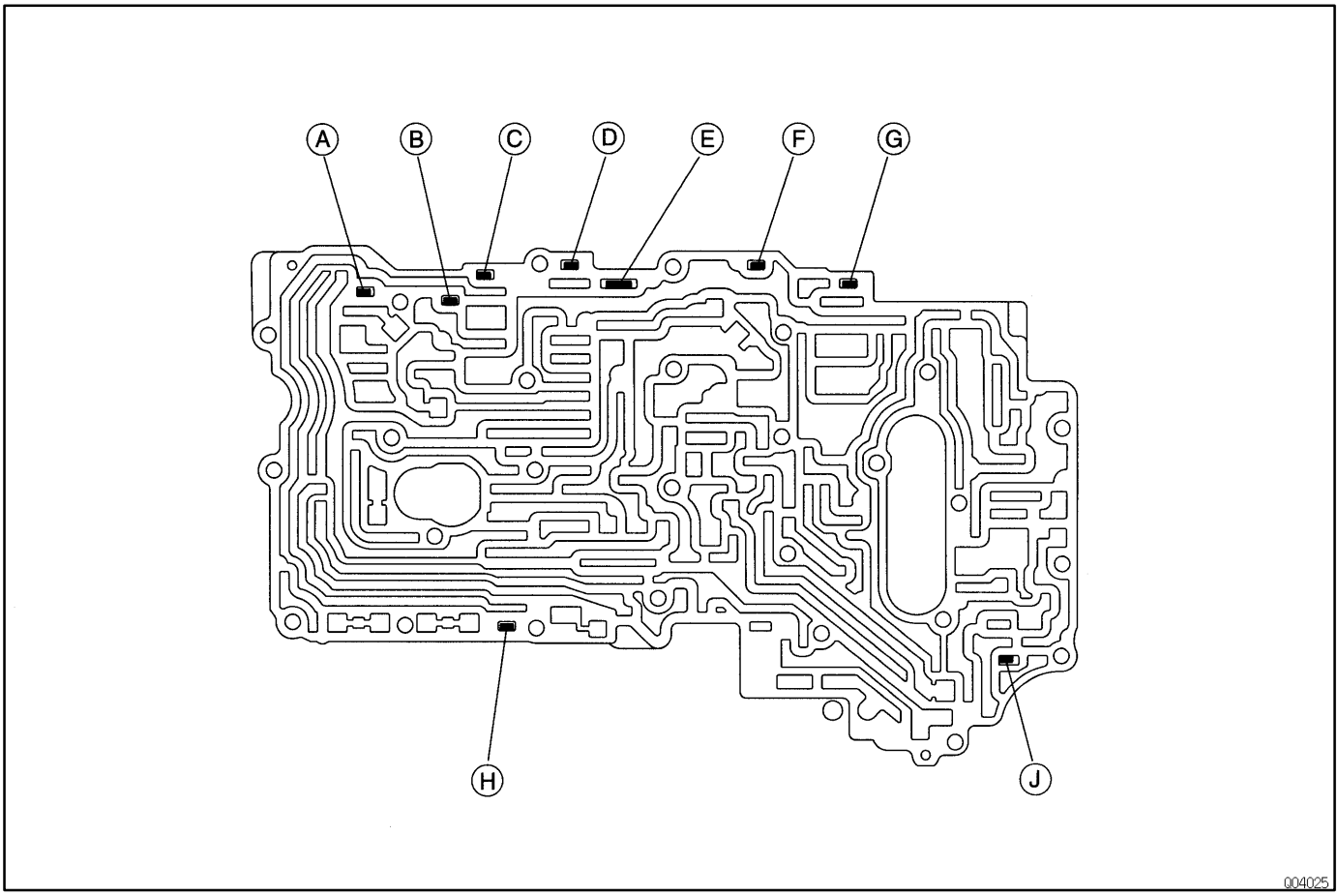

Mark	Retainer	Height / Width / Thickness mm (in.)
(A)	Check valve	10.0 (0.394) / 5.0 (0.197) / 3.2 (0.126)
(B)	Check valve	19.0 (0.748) / 5.0 (0.197) / 3.2 (0.126)
(C)	Reverse control valve	16.0 (0.630) / 5.0 (0.197) / 3.2 (0.126)
(D)	2-3 Shift valve	12.5 (0.492) / 5.0 (0.197) / 3.2 (0.126)
(E)	C_1 Accumulator	37.5 (1.476) / 5.0 (0.197) / 3.2 (0.126)
(F)	C_1 Orifice control valve	12.5 (0.492) / 5.0 (0.197) / 3.2 (0.126)
(G)	Secondary regulator valve	10.0 (0.394) / 5.0 (0.197) / 3.2 (0.126)
(H)	3-4 Shift valve	11.5 (0.453) / 5.0 (0.197) / 3.2 (0.126)
(J)	Lock-up relay valve	21.2 (0.835) / 5.0 (0.197) / 3.2 (0.126)

2. CHECK BALLS

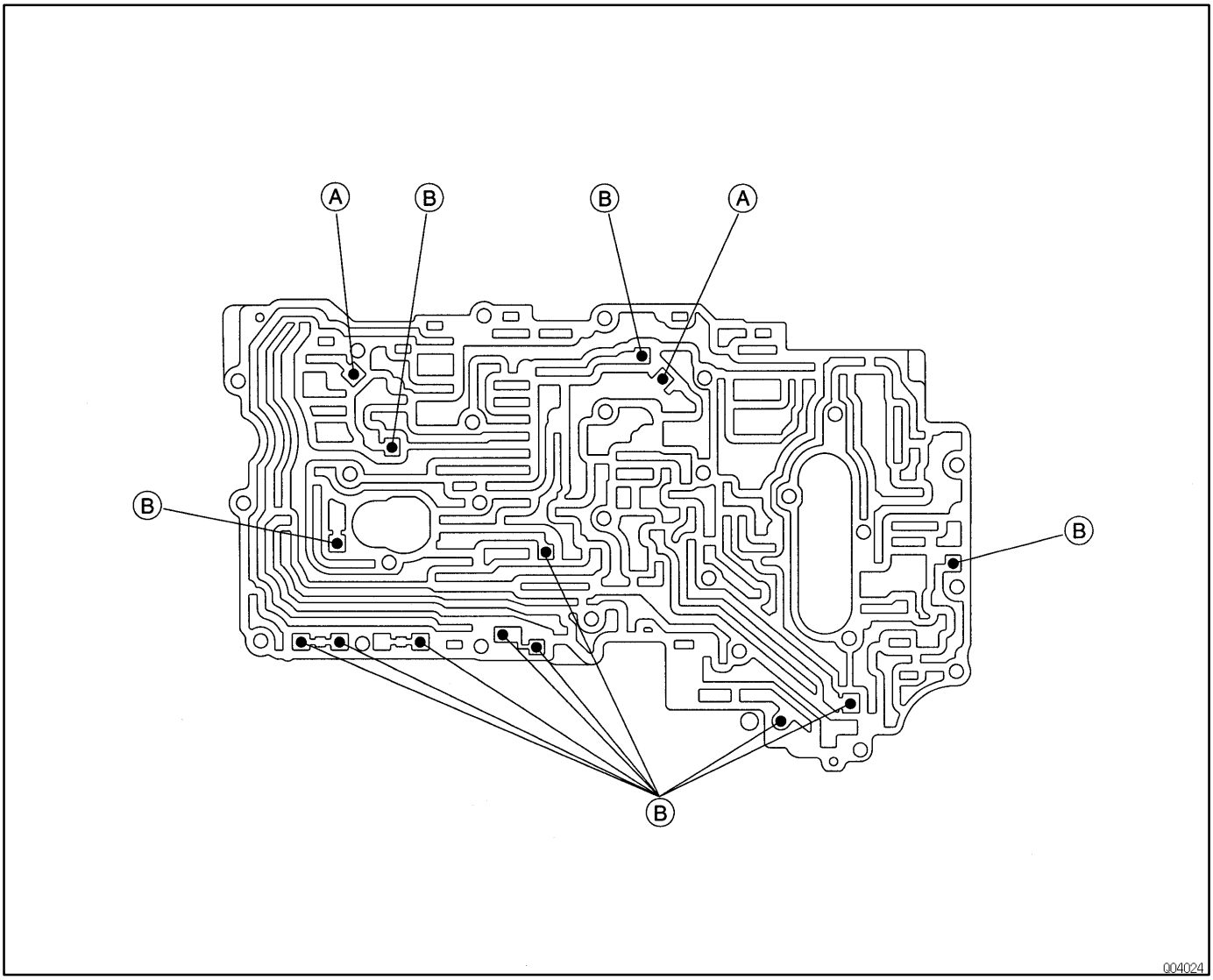

Mark	Check ball	Diameter mm (in.)
(A)	Rubber ball	6.35 (0.250)
(B)	Rubber ball	5.54 (0.2181)

LOWER VALVE BODY

COMPONENTS

AT0EU-02

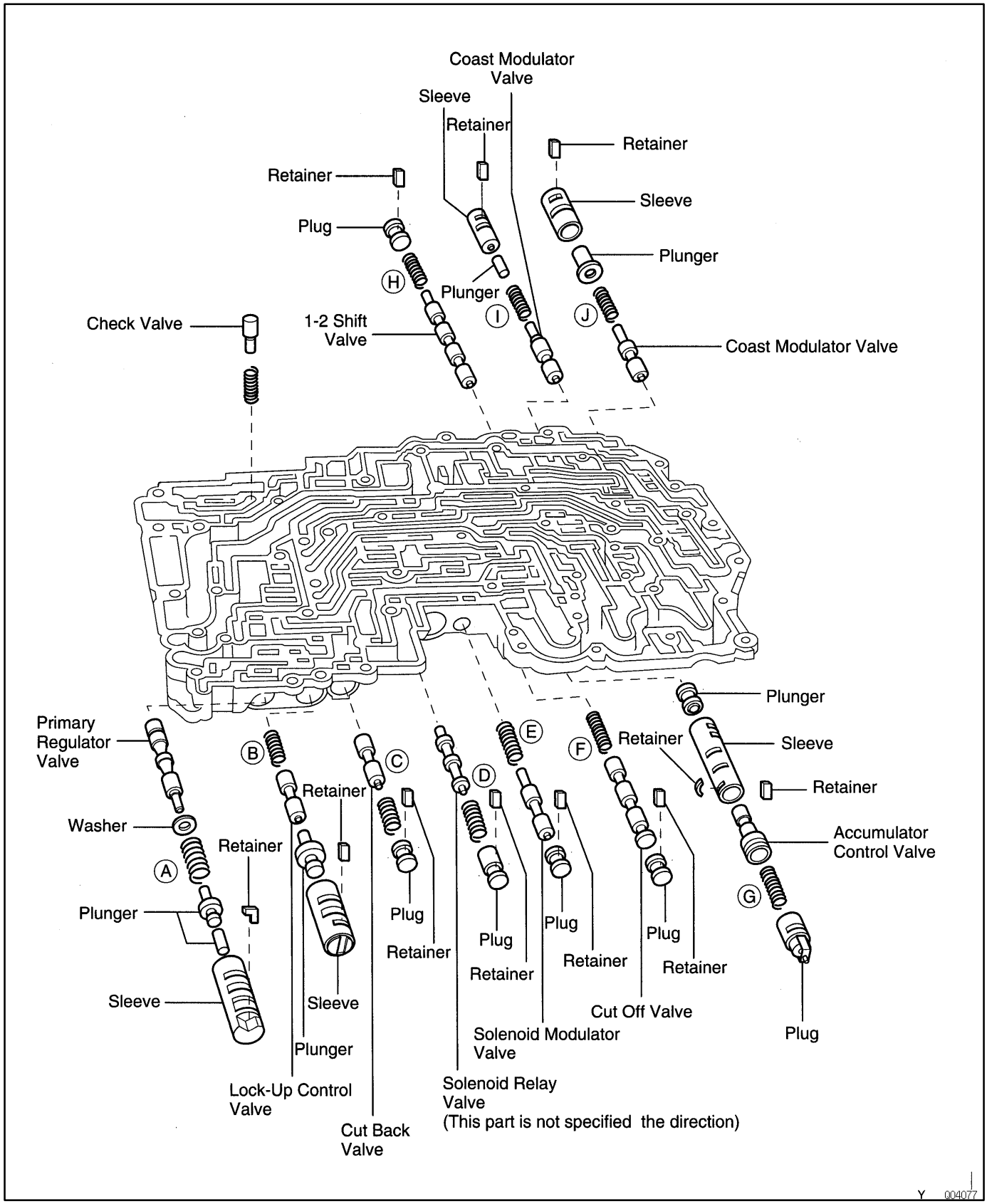

AT0EV-04

VALVE BODY SPRINGS SPECIFICATIONS

HINT: During reassembly please refer to the spring specifications below to help you to differentiate the different springs.

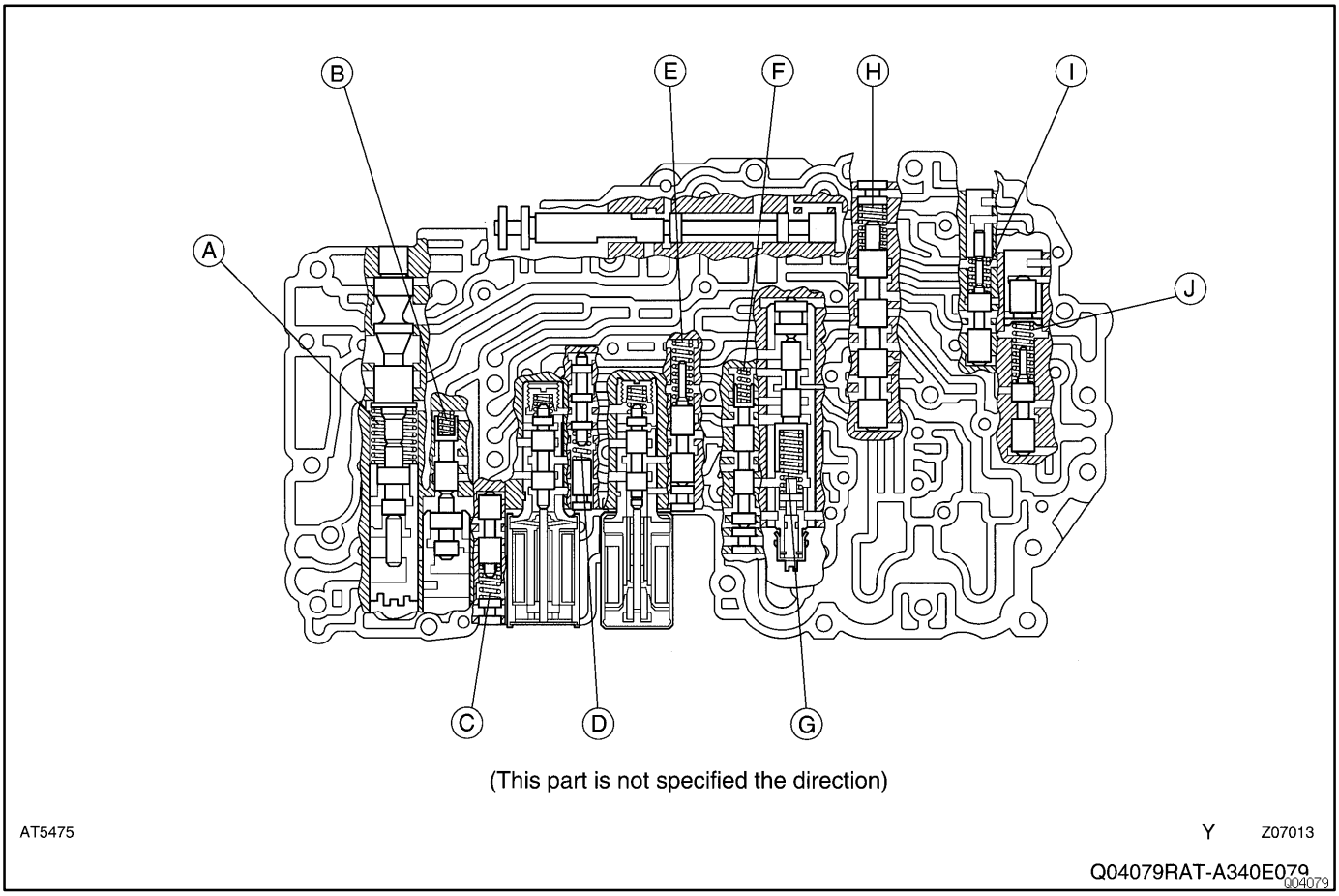

Mark	Name (Color)	Free length / Outer diameter mm (in.)	Total No. of coils
(A)	Primary regulator valve (Blue)	45.62 (1.7961) / 16.88 (0.6446)	9.5
(B)	Lock-up control valve (White)	18.52 (0.7291) / 5.30 (0.209)	12.75
(C)	Cut back valve (None)	18.80 (0.740) / 7.48 (0.2995)	7.50
(D)	Solenoid relay valve (None)	18.80 (0.740) / 7.48 (0.2995)	7.50
(E)	Solenoid modulator valve (Yellow)	32.13 (1.2650) / 8.00 (0.3150)	15.75
(F)	Cut off valve (None)	20.30 (0.719) / 6.10 (0.240)	12.75
(G)	Accumulator control valve (White)	31.17 (1.2272 / 8.85 (0.3484)	12.50
(H)	1-2 Shift valve (Purple)	30.77 (1.2114) / 9.70 (0.382)	10.50
(I)	Coast modulator valve (Green)	21.83 (0.8594) / 8.00 (0.3150)	10.5
(J)	*Coast modulator valve (Blue)	26.09 (1.0272) / 8.19 (0.3224)	12.0
	(Light Blue)	26.60 (1.0472) / 8.19 (0.3224)	12.0
	(White)	27.11 (1.0673) / 8.19 (0.3224)	12.0

* One of the 3 types of spring is installed.

AT0EW-02

RETAINERS LOCATION

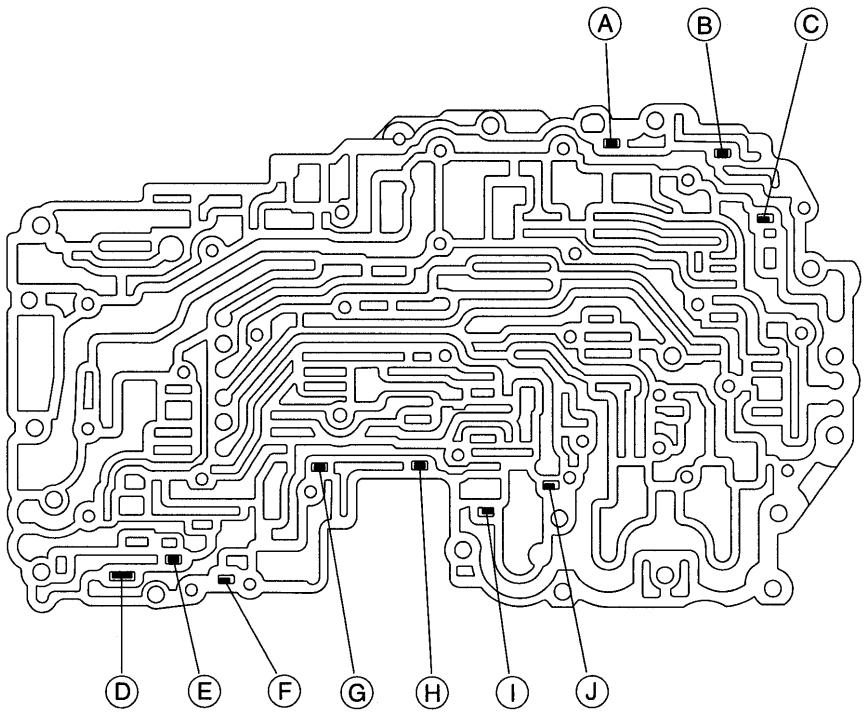

004022

Mark	Retainer	Height / Width / Thickness mm (in.)
(A)	1-2 Shift valve	14.0 (0.551) / 5.0 (0.197) / 3.2 (0.126)
(B)	Coast modulator valve	14.0 (0.551) / 5.0 (0.197) / 3.2 (0.126)
(C)	Coast modulator valve	14.0 (0.551) / 5.0 (0.197) / 3.2 (0.126)
(D)	Primary regulator valve	13.0 (0.521) / 5.0 (0.197) / 3.2 (0.126)
(E)	Lock-up control valve	14.5 (0.570) / 5.0 (0.197) / 3.2 (0.126)
(F)	Cut back valve	8.5 (0.335) / 5.0 (0.197) / 3.2 (0.126)
(G)	Solenoid relay valve	12.5 (0.492) / 5.0 (0.197) / 3.2 (0.126)
(H)	Solenoid modulator valve	14.5 (0.570) / 5.0 (0.197) / 3.2 (0.126)
(I)	Cut off valve	19.0 (0.748) / 5.0 (0.197) / 3.2 (0.126)
(J)	Accumulator control valve	29.0 (1.142) / 5.0 (0.197) / 3.2 (0.126)

AT0PV-02

VALVE BODY ASSEMBLY

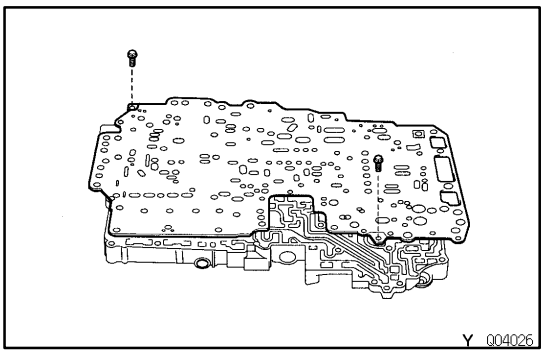

1. INSTALL ASSEMBLED GASKETS ON UPPER VALVE BODY

Align the assembled gaskets with each bolt hole and install the screw.

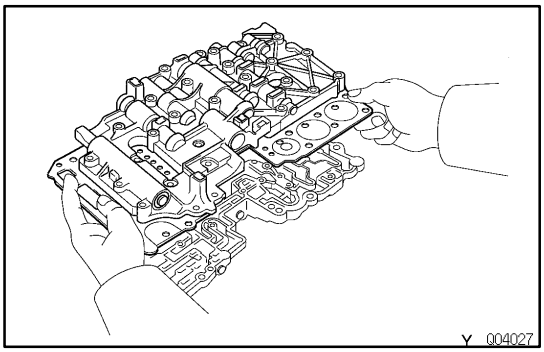

2. PLACE UPPER VALVE BODY WITH GASKETS ON TOP OF LOWER VALVE BODY

Align each bolt hole and gaskets in the valve body.

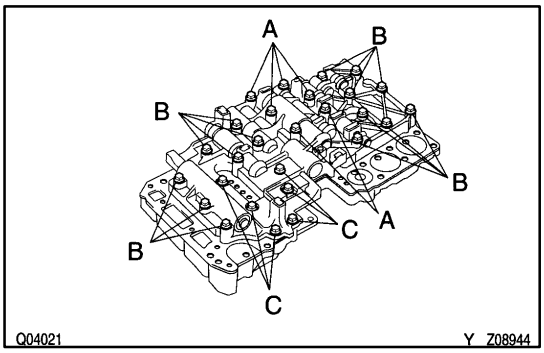

3. INSTALL 28 BOLTS TO UPPER VALVE BODY

HINT: Each bolt length (mm, in.) is indicated below.

Torque: 6.5 N·m (65 kgf·cm, 56 in.·lbf)

Bolt length:

Bolt A: 45 mm (1.772 in.)

Bolt B: 35 mm (1.378 in.)

Bolt C: 20 mm (0.787 in.)

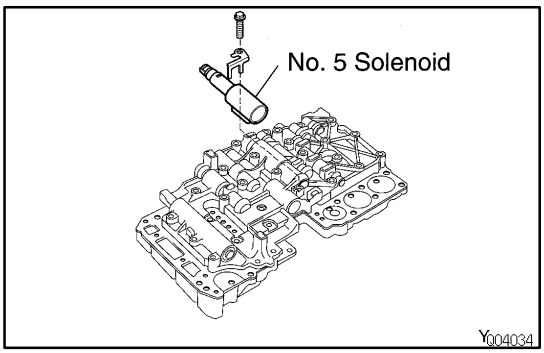

4. INSTALL NO.5 SOLENOID VALVE

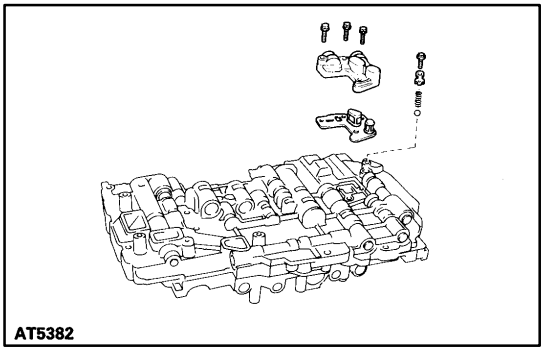

5. TURN OVER ASSEMBLY INSTALL OIL STRAINER AND PRESSURE RELIEF VALVE

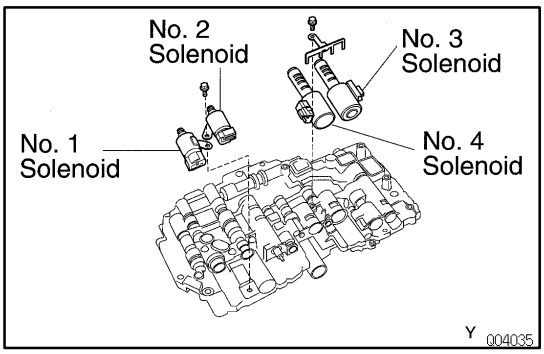

6. INSTALL NO.1, NO.2, NO.3, NO.4, SOLENOID VALVES

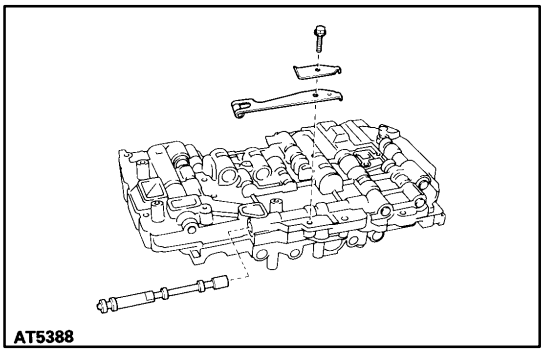

7. INSTALL MANUAL VALVE

8. INSTALL DETENT SPRING

Torque: 10 N·m (100 kgf·cm, 7 ft·lbf)

9. MAKE SURE MANUAL VALVE MOVES SMOOTHLY

COMPONENT PARTS INSTALLATION

AT0EY-02

Disassembly, inspection and assembly of each component group have been indicated in the preceding chapter. Before installation, make sure again that all component groups are assembled correctly.

If a problem is found in a certain component group during assembly, inspect and repair this group immediately.

Recommended ATF:

Type T-II or equivalent

GENERAL NOTES:

1. The automatic transmission is composed of highly precision-finished parts, necessitating careful inspection before assembly because even a small nick could cause fluid leakage or affect performance.
2. Before assembling new clutch discs, soak them in automatic transmission fluid for at least 15 minutes.
3. Apply automatic transmission fluid on sliding or rotating surfaces of parts before assembly.
4. Use petroleum jelly to keep small parts in their place.
5. Do not use adhesive cements on gaskets and similar parts.
6. When assembling the transmission, be sure to use new gaskets and O-rings.
7. Dry all parts with compressed air-never use shop rags.
8. When working with FIPG material, you must observe the following.
   - ★ Using a razor blade and gasket scraper, remove all the old packing (FIPG) material from the gasket surfaces.
   - ★ Thoroughly clean all components to remove all the loose material.
   - ★ Clean both sealing surface with a non-residue solvent.
   - ★ Parts must be assembled within 10 minutes of application. Otherwise, the packing (FIPG) material must be removed and reapplied.

BEARINGS AND RACES INSTALLATION POSITION AND DIRECTION

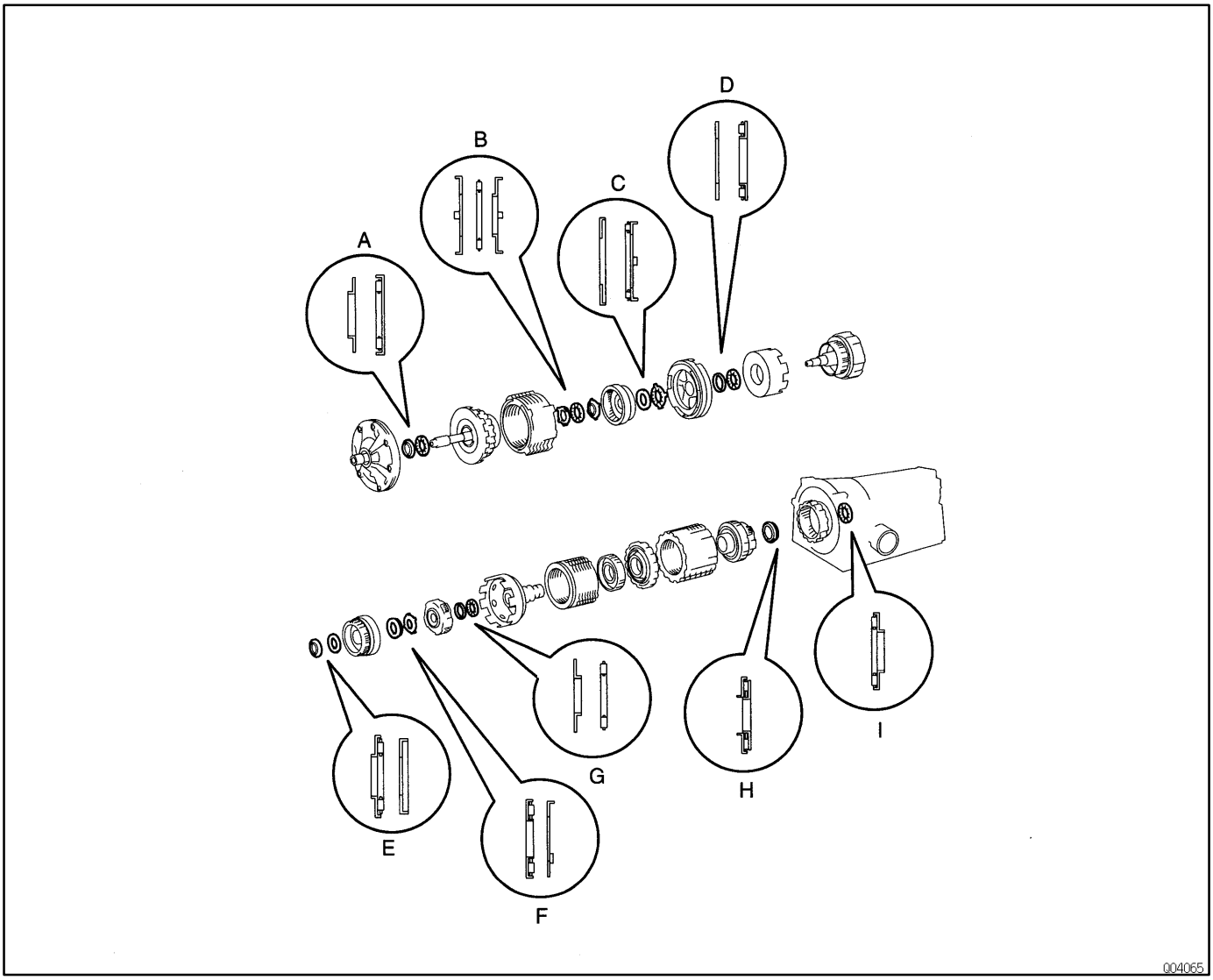

Mark	Front Race Diameter Inside / Outside mm (in.)	Thrust Bearing Diameter Inside / Outside mm (in.)	Rear Race Diameter Inside / Outside mm (in.)
A	28.1 (1.106) / 47.5 (1.870)	28.8 (1.134) / 50.4 (1.984)	-
B	27.2 (1.070) / 42.0 (1.654)	25.9 (1.020) / 47.0 (1.850)	24.0 (0.945) / 48.0 (1.890)
C	37.1 (1.461) / 59.0 (2.323)	33.6 (1.323) / 50.3 (1.980)	-
D	37.0 (1.457) / 51.0 (2.008)	33.5 (1.319) / 47.8 (1.882)	-
E	26.0 (1.024) / 48.9 (1.925)	25.9 (1.020) / 47.0 (1.850)	26.5 (1.043) / 47.0 (1.850)
F	-	35.0 (1.378) / 53.8 (2.118)	34.0 (1.339) / 48.0 (1.890)
G	33.5 (1.319) / 47.8 (1.882)	35.4 (1.394) / 48.0 (1.890)	-
H	-	27.6 (1.087) / 54.5 (2.146)	-
H'	28.8 (1.134) / 44.8 (1.764)	30.1 (1.185) / 44.7 (1.760)	28.7 (1.094) / 44.8 (1.764)
I	-	39.0 (1.535) / 57.7 (2.272)	-

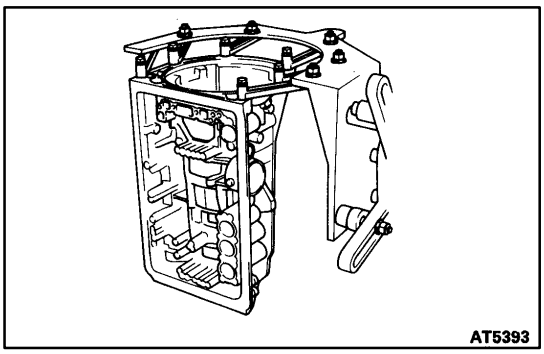

AT0PW-03

BASIC SUBASSSEMBLY REASSEMBLY

1. INSTALL TRANSMISSION CASE

Install the transmission case in the overhaul attachment.

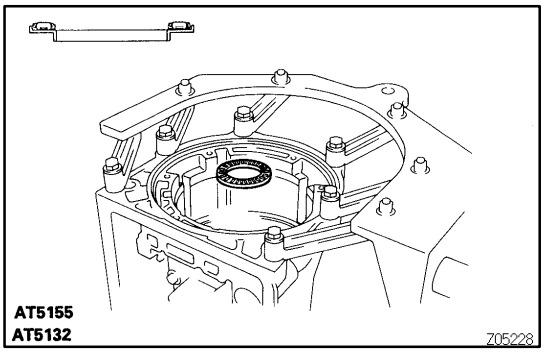

2. INSTALL BEARING AND RACE

(a) Coat the assembled bearing and race with petroleum jelly.

(b) Install it onto the case.

Assembled bearing and race diameter

mm (in.)

	Inside	Outside
Assembled bearing and race	39.0 (1.535)	57.7 (2.272)

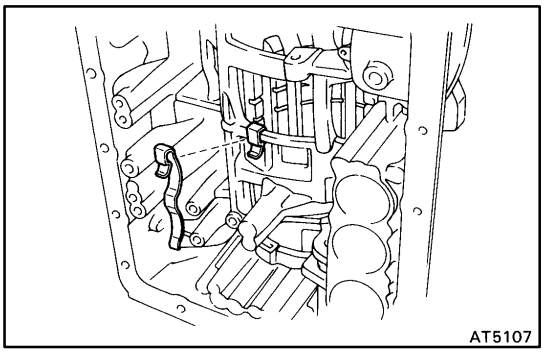

3. INSTALL LEAF SPRING

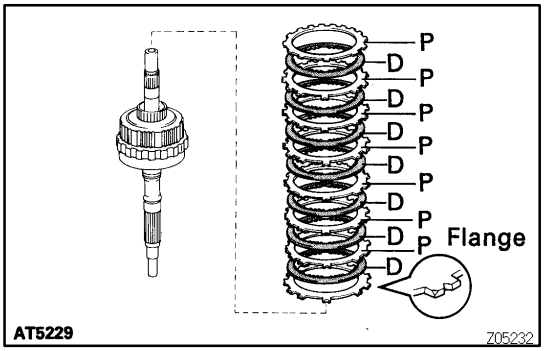

4. INSTALL REAR PLANETARY GEAR UNIT WITH FIRST AND REVERSE BRAKE AND OUTPUT SHAFT

(a) Install the flange, the rounded edge facing upward.

(b) Install the 7 plates and 7 discs.

Install in order: P=Plate D=Disc

D-P-D-P-D-P-D-P-D-P-D-P-D-P

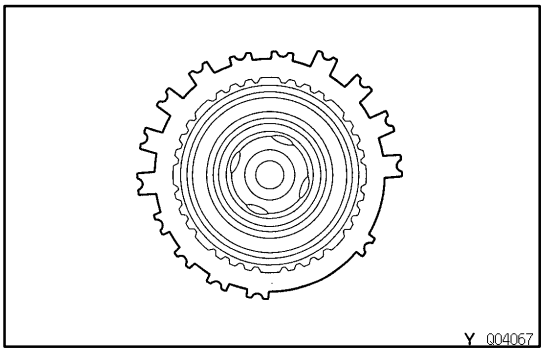

(c) Align the teeth of the flange, discs and plates.

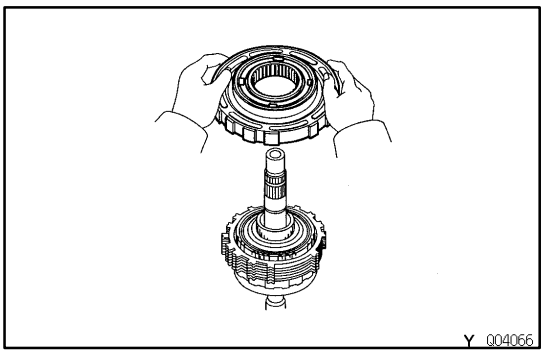

(d) Face the snap ring upward (front side) and install the second brake drum to the planetary gear.
NOTICE: Face the oil hole in the drum towards the lower side of the transmission case (the side the valve body is installed).

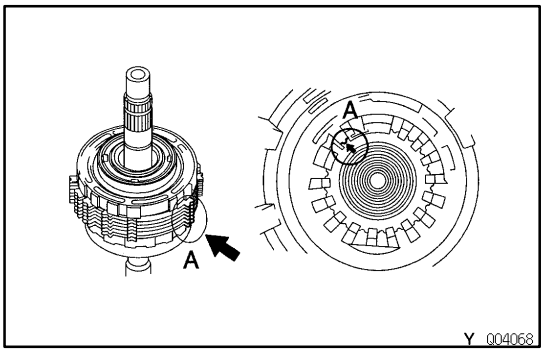

(e) Align the splines of the transmission case and the assembled rear planetary gear, first and reverse brake pack and output shaft, indicated by A.

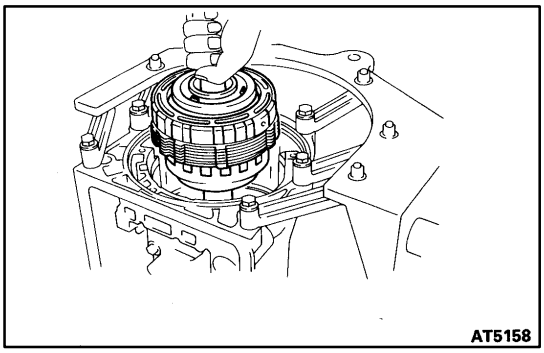

(f) Install the assembled rear planetary gear, first and reverse brake pack and output shaft.

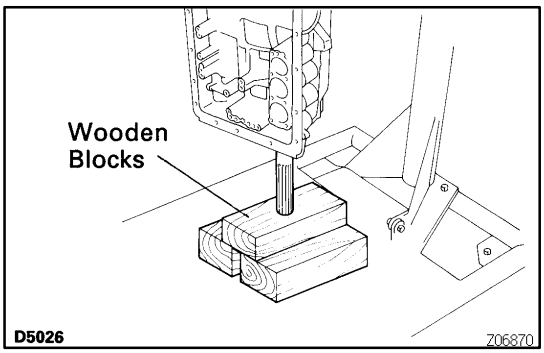

(g) Rest the output shaft on wooden blocks.

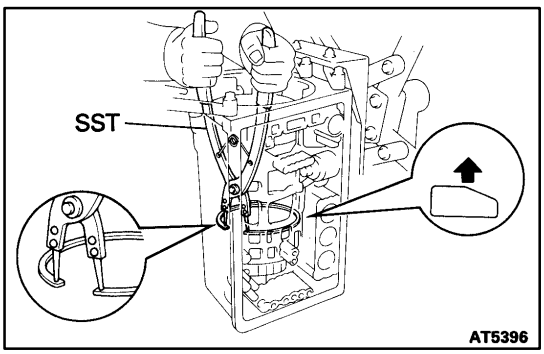

(h) Using SST, install the snap ring.
SST 09350-30020 (09350-07060)

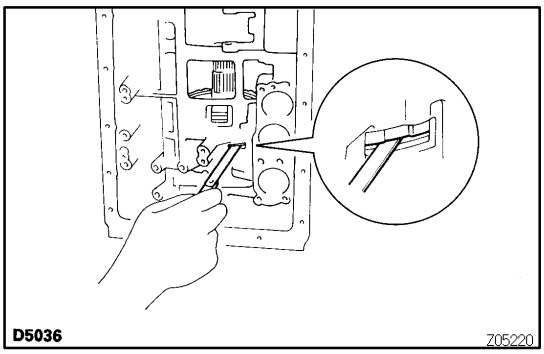

5. CHECK PACK CLEARANCE OF FIRST AND REVERSE BRAKE

Using a feeler gauge, measure the clearance between the plate and second brake drum.

Clearance:

0.70-1.00 mm (0.028-0.039 in.)

If the values are non-standard, select another flange.

HINT: There are 8 different flange thickness.

Flange Thickness

mm (in.)

No.	Thickness	No.	Thickness
68	5.4 (0.213)	52	4.6 (0.181)
67	5.2 (0.205)	53	4.4 (0.173)
50	5.0 (0.197)	54	4.2 (0.165)
51	4.8 (0.189)	55	4.0 (0.157)

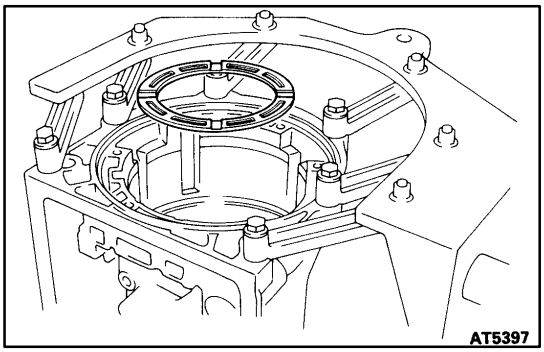

6. INSTALL SECOND BRAKE PISTON SLEEVE

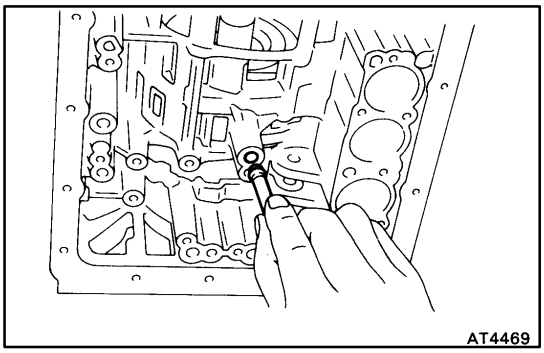

7. INSTALL NEW BRAKE DRUM GASKET

(a) Coat the gasket with ATF.

(b) Install a new brake drum gasket.

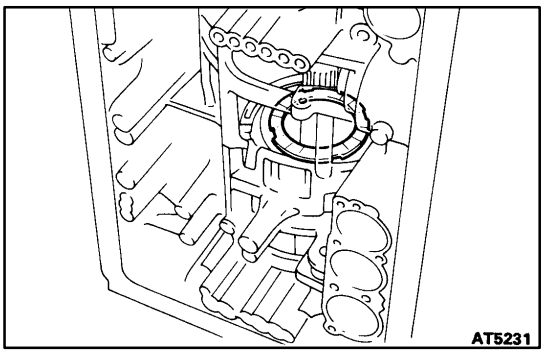

8. INSTALL NO.1 ONE-WAY CLUTCH

(a) Install the No.1 thrust washer onto the second brake.

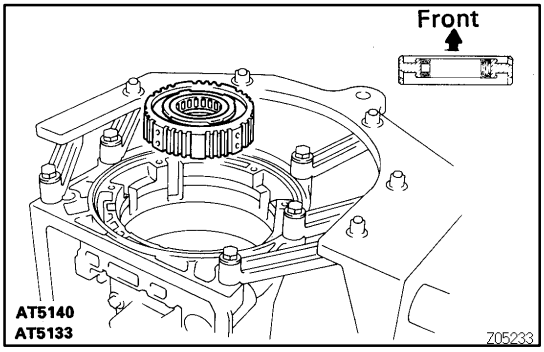

(b) Install the No.1 one-way clutch.

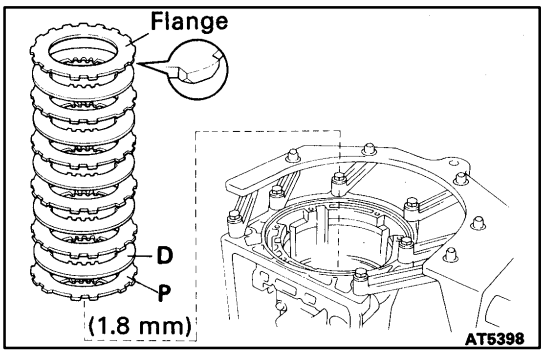

9. INSTALL FLANGE, PLATES AND DISCS OF SECOND BRAKE

(a) Install the 1.8 mm (0.071 in.) thick plate with the rounded-edge side of the plate facing the disc.

(b) Install the 5 plates and 5 discs.
Install in order: P=Plate D=Disc
D-P-D-P-D-P-D-P-D-P

(c) Install the flange with the rounded edge of the flange facing the disc.

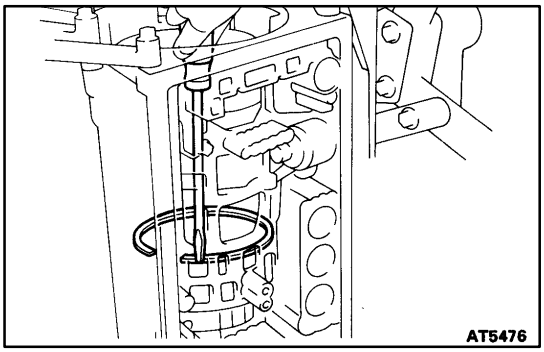

(d) Using a screwdriver, install the snap ring.

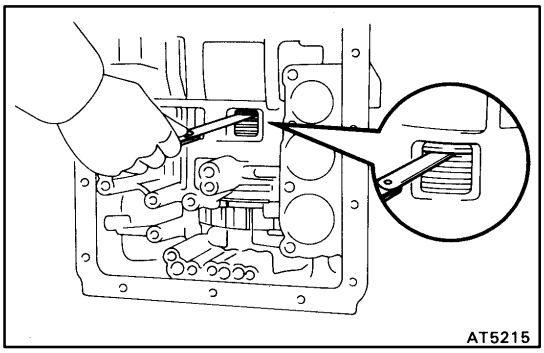

10. CHECK PACK CLEARANCE OF SECOND BRAKE

Using a feeler gauge, measure the clearance between the snap ring and flange.

Clearance:

0.49-1.1 1 mm (0.0193-0.0437 in.)

If the values are non-standard, check for improper installation.

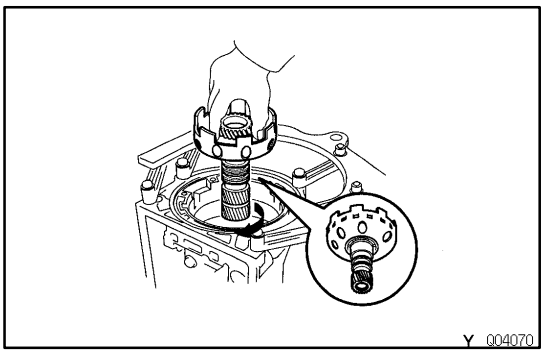

11. INSTALL PLANETARY SUN GEAR

While turning the planetary sun gear clockwise, install it into No.1 one-way clutch.

HINT: Confirm the thrust washer is installed correctly.

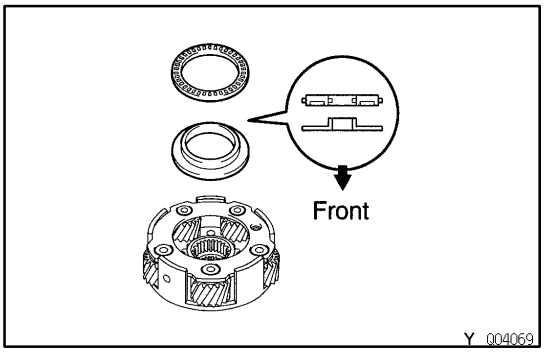

12. INSTALL FRONT PLANETARY GEAR

(a) Coat the bearing and race with petroleum jelly and install them onto the front planetary gear.

Bearing and race diameter

mm (in.)

	Inside	Outside
Bearing	35.4 (1.394)	48.0 (1.890)
Race	33.5 (1.319)	47.8 (1.882)

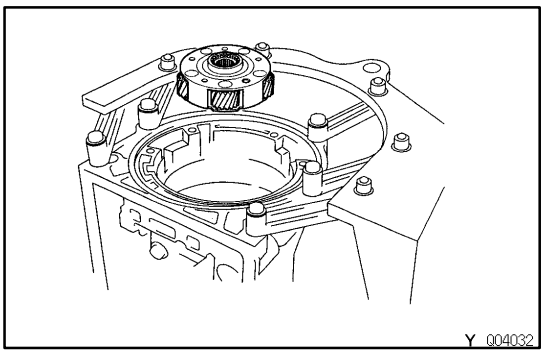

(b) Install the front planetary gear to the sun gear input drum.

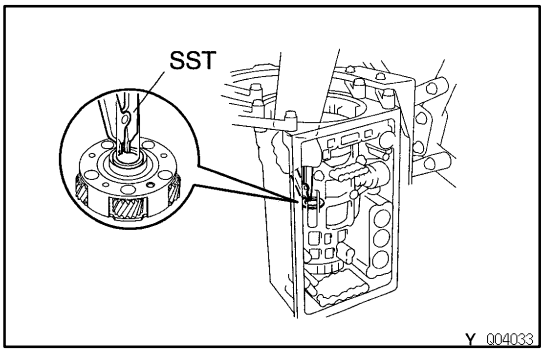

(c) Using SST, install the snap ring.
SST 09350-30020 (09350-07070)

(d) Remove the wooden blocks under the output shaft.

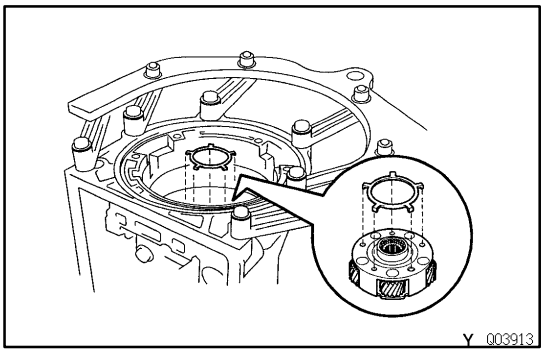

(e) Coat the race with petroleum jelly and install it onto the front planetary gear.

Race diameter

mm (in.)

	Inside	Outside
Race	34.0 (1.339)	48.0 (1.890)

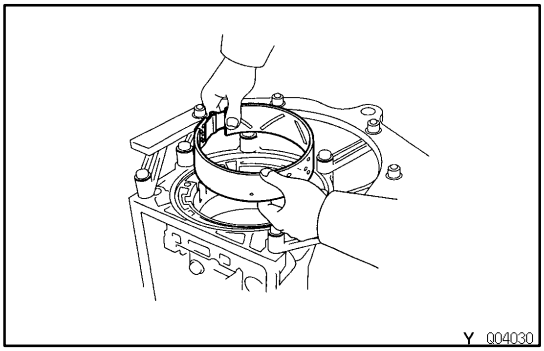

14. INSTALL SECOND COAST BRAKE BAND

(a) Install the second coast brake band to the transmission case.

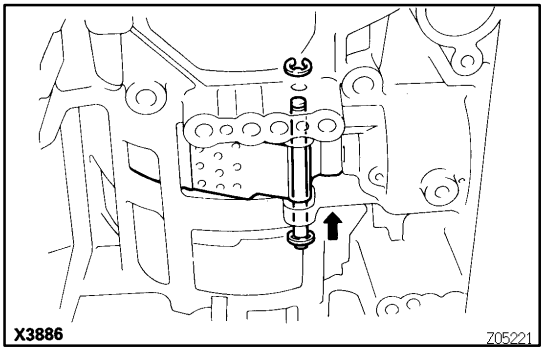

(b) Install the E-ring to the pin.

(c) Install the pin through the brake band.

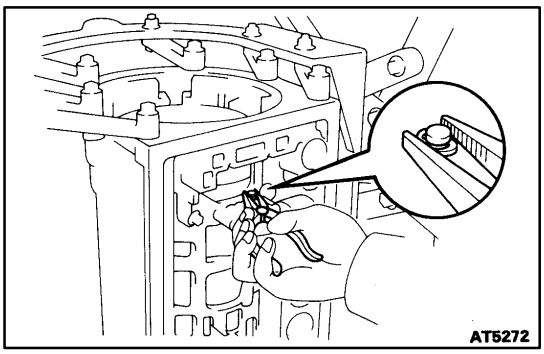

(d) Install the E-ring to the pin.

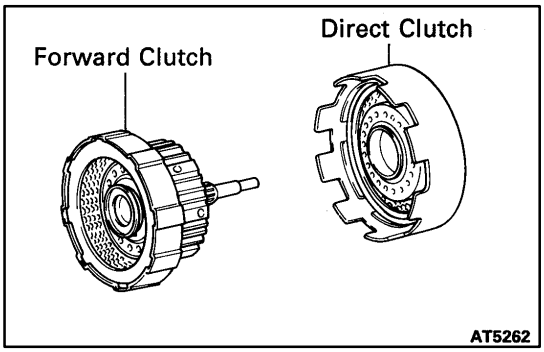

15. INSTALL DIRECT CLUTCH TO FORWARD CLUTCH

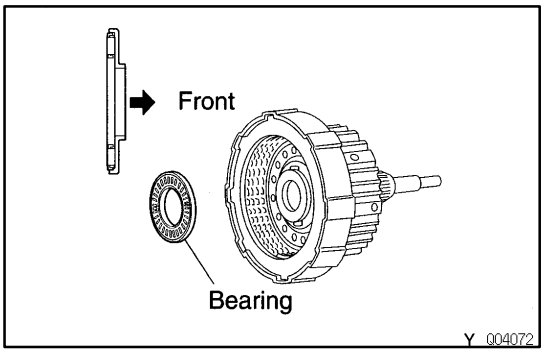

16. INSTALL FRONT PLANETARY RING GEAR TO FORWARD AND DIRECT CLUTCH

(a) Coat the bearing and race with petroleum jelly and install them onto the forward clutch.

Bearing and race diameter

mm (in.)

	Inside	Outside
Bearing	25.9 (1.020)	48.9 (1.925)

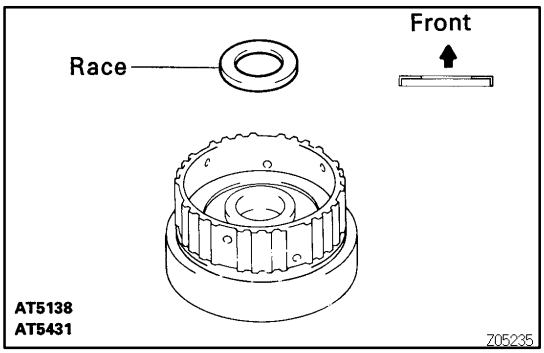

(b) Coat the race with petroleum jelly and install it onto the front planetary ring gear.

Race diameter

mm (in.)

	Inside	Outside
Race	26.5 (1.043)	47.0 (1.850)

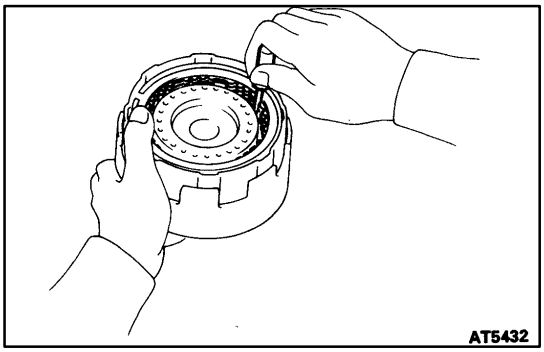

(c) Align the flukes of the discs in the forward clutch.

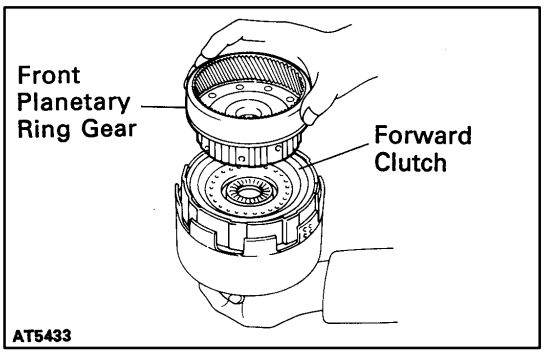

(d) Align the splines of the front planetary ring gear with the flukes of the discs and install the front planetary ring gear to the forward clutch.

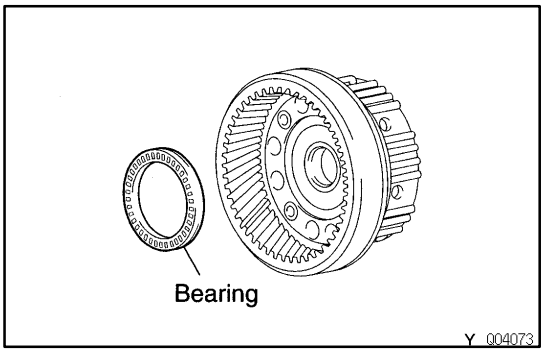

17. INSTALL ASSEMBLED DIRECT CLUTCH, FORWARD CLUTCH AND FRONT PLANETARY RING GEAR INTO CASE

(a) Coat the bearing and race with petroleum jelly and install them onto the ring gear.

Bearing and race diameter

mm (in.)

	Inside	Outside
Bearing and Race	35.0 (1.378)	53.8 (2.118)

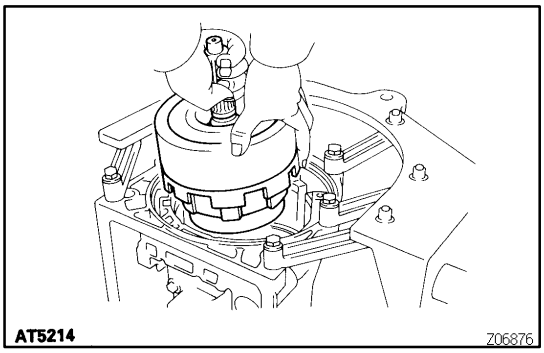

(b) Install the assembled direct clutch, forward clutch and front planetary ring gear into the transmission case.

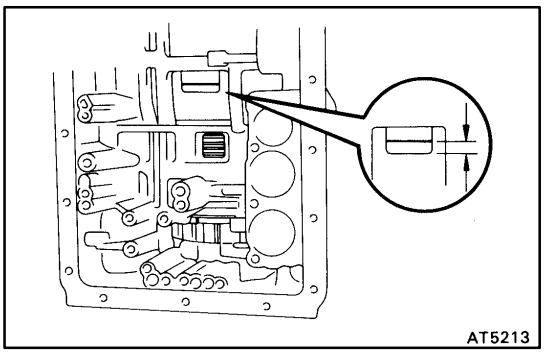

(c) Using vernier calipers, measure the distance between the sun gear input drum and direct clutch drum.

Height:

9.8-11.8 mm (0.386-0.465 in.)

If the values are non-standard, check for improper installation.

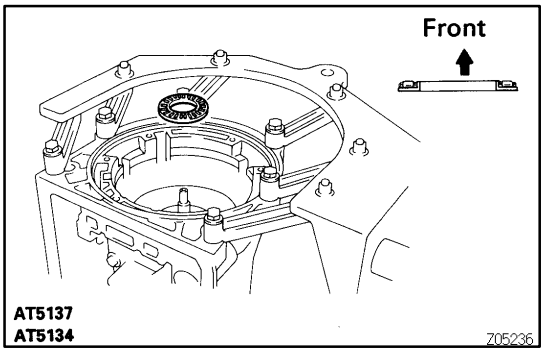

(d) Coat the assembled bearing and race with petroleum jelly and install it onto the forward clutch.

Assembled bearing and race diameter

mm (in.)

	Inside	Outside
Assembled bearing and race	33.5 (1.319)	47.8 (1.882)

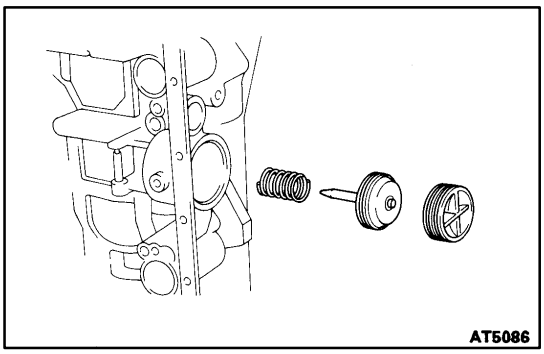

18. INSTALL SECOND COAST BRAKE COVER, PISTON ASSEMBLY AND SPRING

(a) Coat 2 new O-rings with ATF and install them to the cover.

(b) Install the spring, piston assembly and cover to the case.

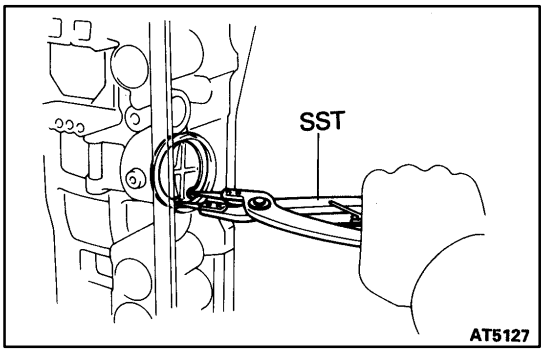

(c) Using SST, install the snap ring.
SST 09350-30020 (09350-07060)

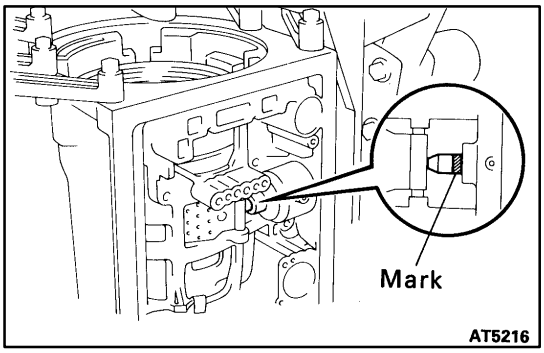

19. CHECK PISTON ROD STROKE OF SECOND COAST BRAKE

(a) Place a mark on the second coast brake piston rod.

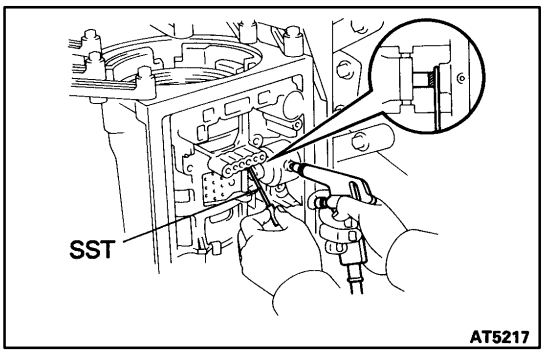

(b) Using SST, measure the stroke while applying and releasing compressed air (392-785 kPa, 4-8 kgf/cm^2 or 57-114 psi).
SST 09240-00020

Piston rod stroke:

1.0-2.0 mm (0.039-0.079 in.)

If the stroke is more than specified, replace the piston rod with a longer one.

Piston rod length:

70.7 mm (2.783 in.)
71.4 mm (2.811 in.)
72.2 mm (2.843 in.)
72.9 mm (2.870 in.)
73.7 mm (2.902 in.)

If it is still more than standard value, replace the brake band with a new one.

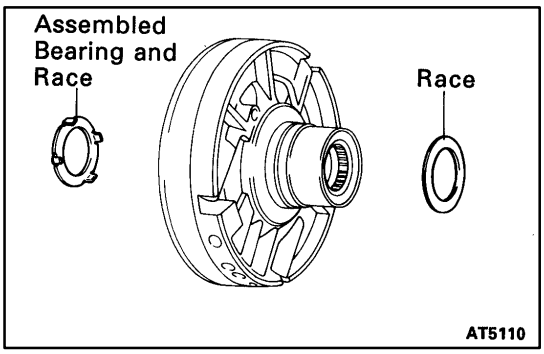

20. INSTALL OVERDRIVE SUPPORT ASSEMBLY

(a) Coat the assembled bearing and races with petroleum jelly and install them onto the overdrive support assembly.
Assembled bearing and race diameter
mm (in.)

	Inside	Outside
Assembled bearing and race	33.6 (1.323)	50.3 (1.980)
Race	37.0 (1.457)	51.0 (2.008)

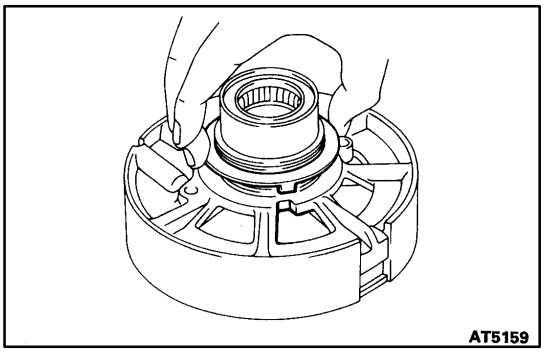

(b) Confirm the thrust washer is installed correctly.
HINT: Make sure that the lug shape matches the hole on the O/D support.

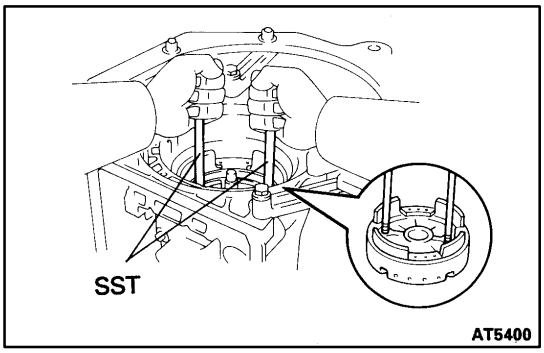

(c) Using 2 bolts of SST, aim the bolt and oil holes of the overdrive support toward the valve body side, align them with the bolt holes of the transmission case.
SST 09350-30020 (09350-07020)

(d) Temporarily install the 2 bolts.

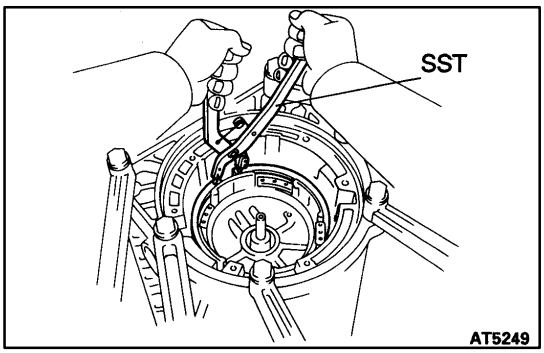

(e) Using SST, install the snap ring.
SST 09350-30020 (09350-07060)

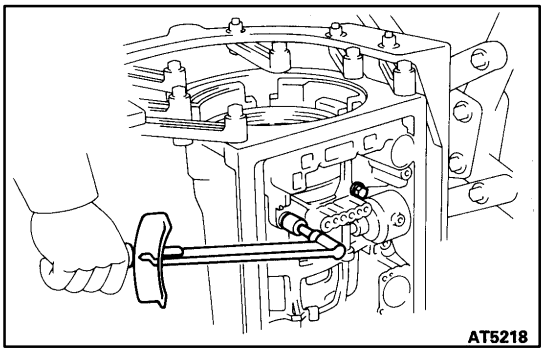

(f) Install and torque the 2 bolts.
Torque: 25 N·m (260 kgf·cm, 19 ft·lbf)

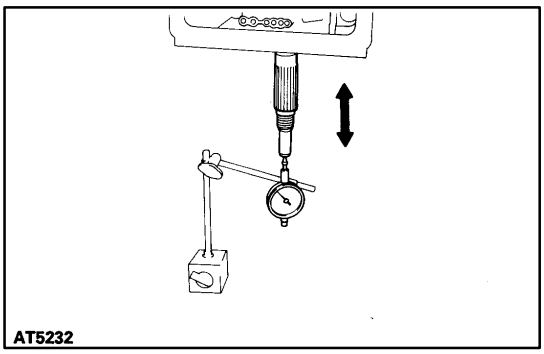

21. CHECK OUTPUT SHAFT

(a) Using a dial indicator, measure the end play of the output shaft.

End play:

1.63-2.89 mm (0.0642-0.1138 in.)

If the values are non-standard, check for improper installation.

(b) Check to see that output shaft rotates smoothly.

22. INSTALL FLANGES, PLATES AND DISCS OF OVERDRIVE BRAKE

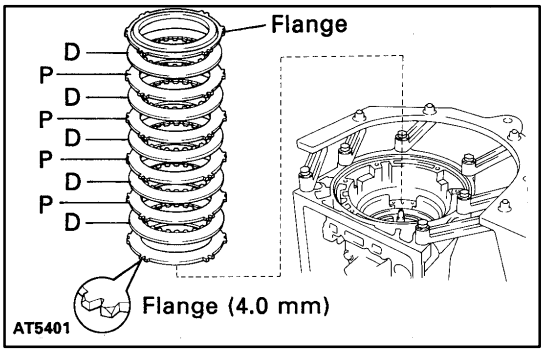

(a) Install the 4.0 mm (0.157 in.) thick flange (flat ring) with the rounded-edge side of the flange facing the disc.

(b) Install the 4 plates and 5 discs.
Install in order: P=Plate D=Disc
D-P-D-P-D-P-D-P-D

(c) Install the flange (stepped ring) with the flat side of the flange facing the disc.

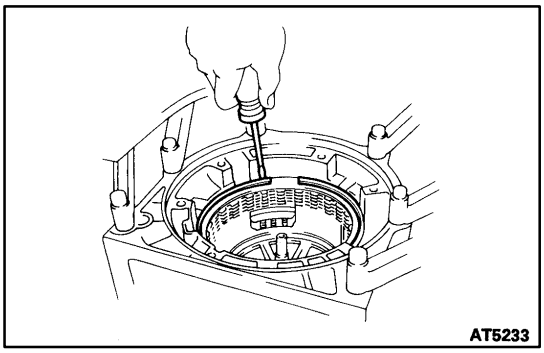

(d) Using a screwdriver, install the snap ring.

23. CHECK PISTON STROKE OF OVERDRIVE BRAKE

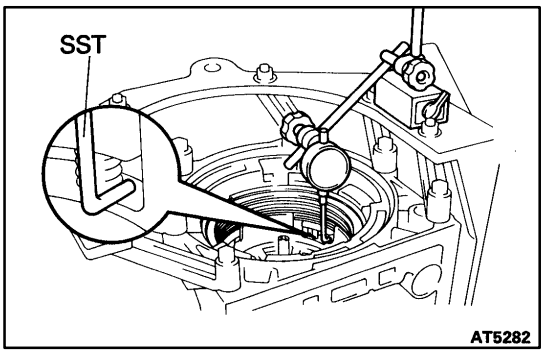

(a) Place SST and a dial indicator onto the overdrive brake piston.
SST 09350-30020 (09350-06120)

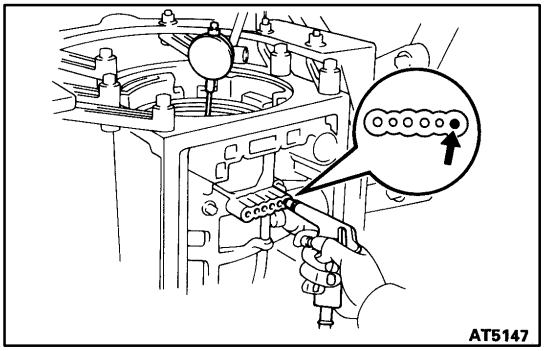

(b) Measure the stroke while applying and releasing compressed air (392-785 kPa, 4-8 kgf/cm^2 or 57-114 psi).

Piston Stroke:

1.75-2.05 mm (0.0690-0.0807 in.)

If the piston stroke is less than the limit, parts may have been assembled incorrectly, so check and reassemble again.

If the piston stroke is non- standard, select another flange.

HINT: There are 7 different flange thicknesses.

Flange thickness

mm (in.)

No.	Thickness	No.	Thickness
77	3.3 (0.130)	81	3.8 (0.150)
78	3.5 (0.138)	82	3.9 (0.154)
79	3.6 (0.142)	83	4.0 (0.157)
80	3.7 (0.146)		

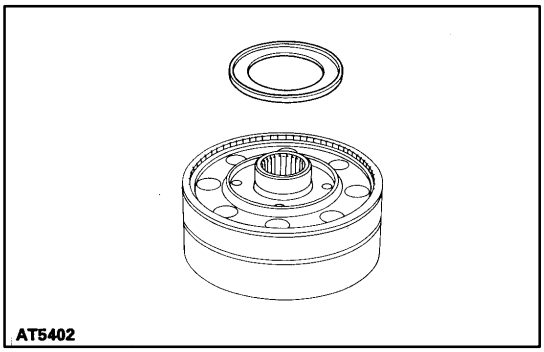

24. INSTALL OVERDRIVE PLANETARY GEAR UNIT WITH OVERDRIVE DIRECT CLUTCH AND ONE- WAY CLUTCH

(a) Coat the race with petroleum jelly and install it onto the overdrive planetary ring gear.

Race diameter

mm (in.)

	Inside	Outside
Race	37.1 (1.461)	59.0 (2.323)

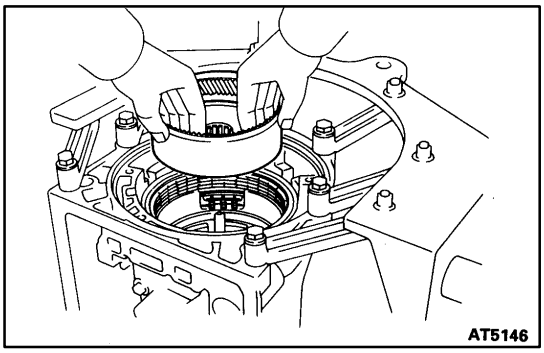

(b) Install the overdrive planetary ring gear.

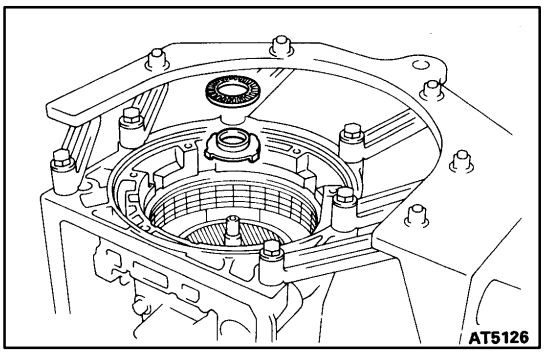

(c) Coat the bearing and race with petroleum jelly and install them onto the planetary ring gear.

Bearing and race diameter

mm (in.)

	Inside	Outside
Bearing	25.9 (1.020)	47.0 (1.850)
Race	24.0 (0.945)	48.0 (1.890)

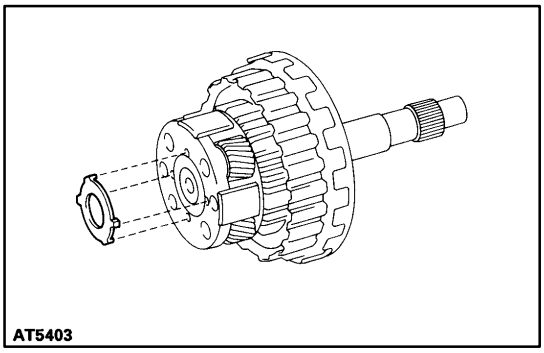

(d) Coat the race with petroleum jelly and install it onto the planetary gear.

Race diameter

mm (in.)

	Inside	Outside
Race	27.2 (1.071)	42.0 (1.654)

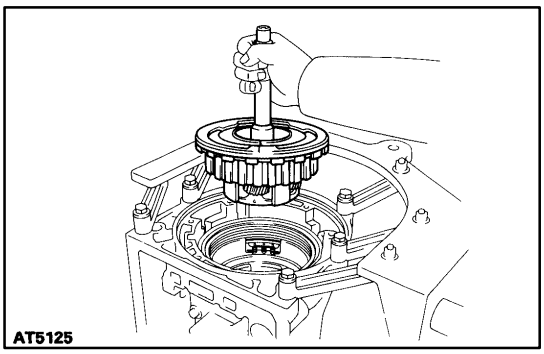

(e) Install the overdrive planetary gear with the overdrive direct clutch and one-way clutch.

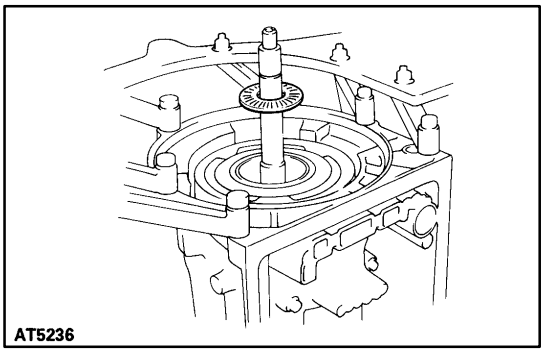

(f) Coat the assembled bearing and race with petroleum jelly and install them onto the overdrive direct clutch.
Assembled bearing and race diameter
mm (in.)

	Inside	Outside
Assembled bearing and race	28.8 (1.134)	50.4 (1.984)

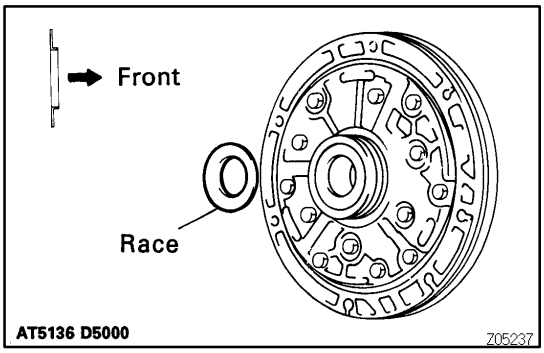

25. INSTALL OIL PUMP INTO CASE

(a) Coat the race with petroleum jelly and install it onto the oil pump.
Race diameter
mm (in.)

	Inside	Outside
Race	28.1 (1.106)	47.5 (1.870)

(b) Coat a new O-ring with ATF and install it around the pump body.

(c) Place the oil pump through the input shaft, and align the bolt holes of the pump body with the transmission case.

(d) Hold the input shaft, and lightly press the oil pump body to slide the oil seal rings into the overdrive direct clutch drum.
NOTICE: Do not push on the oil pump strongly, or the oil seal ring will stick to the direct clutch drum.

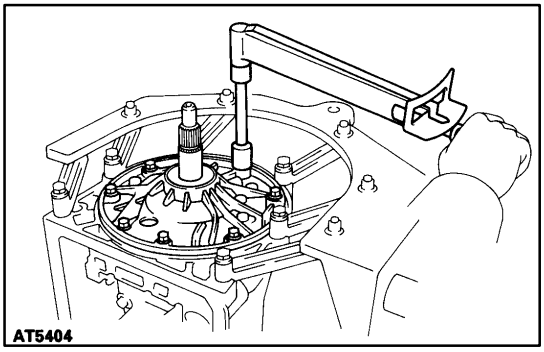

(e) Install the 7 bolts.
Torque: 21 N·m (215 kgf·cm, 16 ft·lbf)

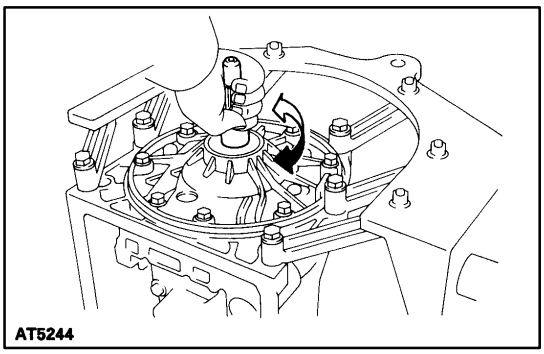

26. CHECK INPUT SHAFT ROTATION

Make sure the input shaft rotates smoothly.

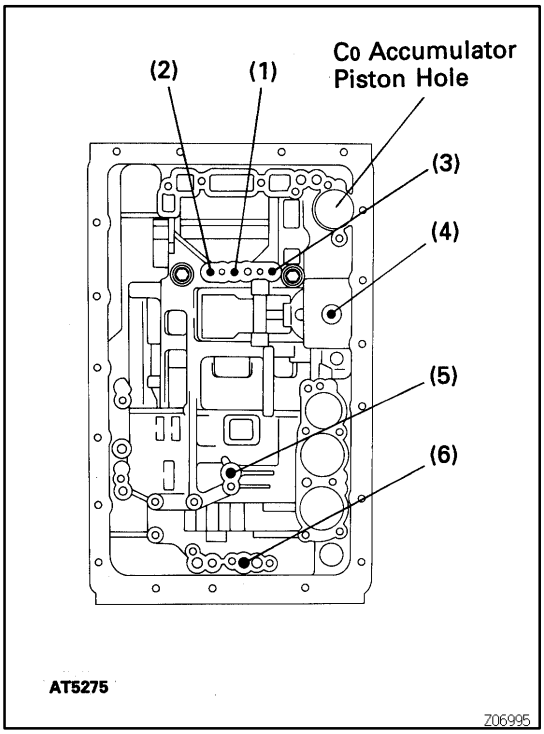

27. INDIVIDUAL PISTON OPERATION INSPECTION

Check for the sound of operation while applying compressed air into the oil holes indicated in the illustration.

HINT: When inspecting the O/D direct clutch, check with the C_0 accumulator piston hole closed.

If there is no noise, disassemble and check the installation condition of the parts.

(1) Direct clutch
(2) Forward clutch
(3) O/D brake
(4) Second coast brake
(5) Second brake
(6) First and reverse brake

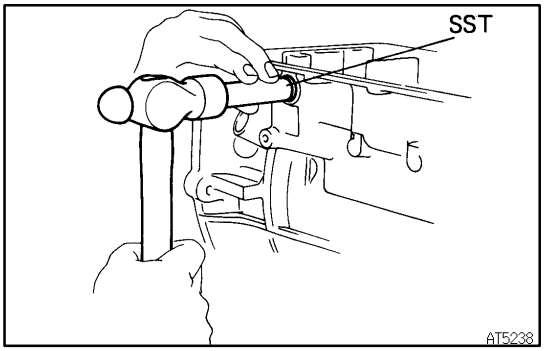

28. INSTALL MANUAL VALVE LEVER, SHAFT AND OIL SEAL

(a) Using SST, drive in a new oil seal.
SST 09350-30020 (09350-07110)
(b) Coat the oil seal lip with MP grease.

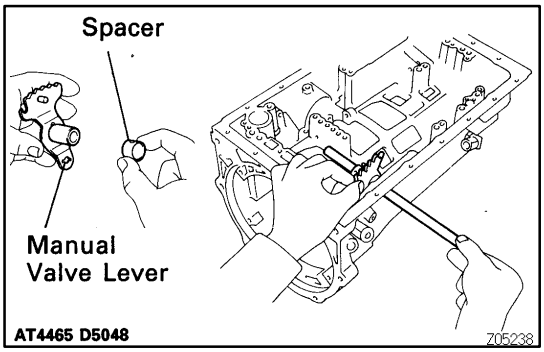

(c) Install a new spacer to the manual valve lever.
(d) Install the manual valve lever shaft to the transmission case through the manual valve lever.

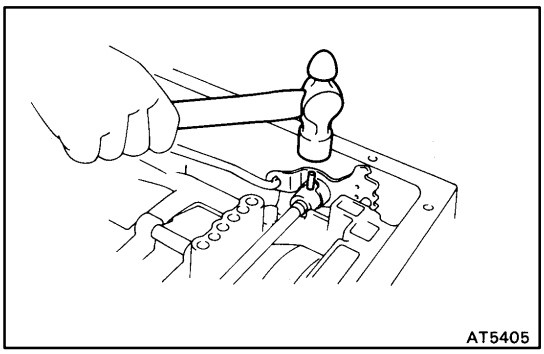

(e) Using a hammer, drive in a new spring pin.

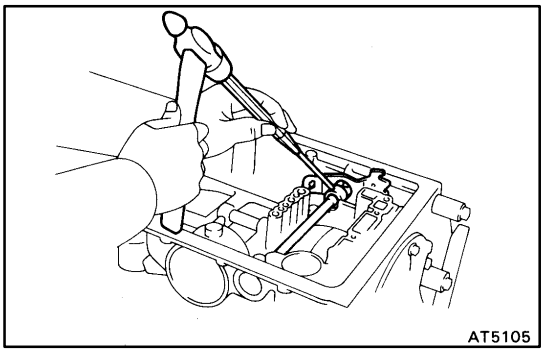

(f) Match the manual valve lever indentation with the spacer hole and calk them together with the punch.
(g) Make sure the shaft rotates smoothly.

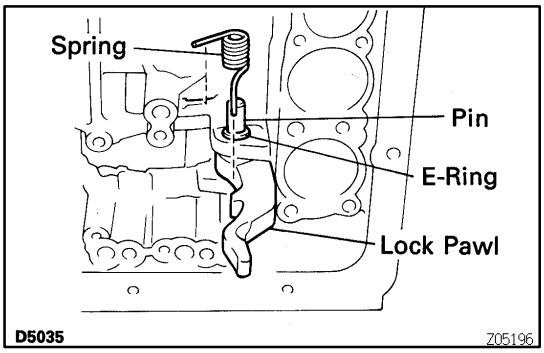

29. INSTALL PARKING LOCK PAWL AND ROD

(a) Install the E-ring to the shaft.
(b) Install the parking lock pawl, shaft and spring.

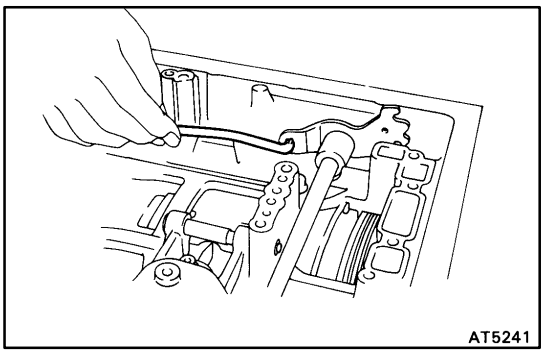

(c) Connect the parking lock rod to the manual valve lever.

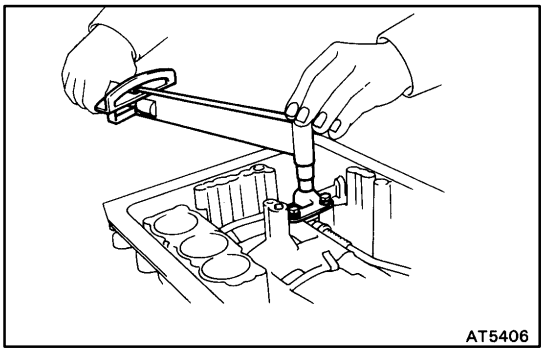

(d) Place the parking lock pawl bracket onto the transmission case and torque the 3 bolts.
Torque: 7 N·m (75 kgf·cm, 65 in.·lbf)

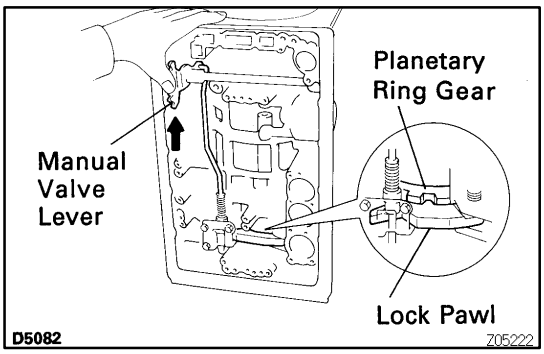

(e) Shift the manual valve lever to the P position, and confirm the planetary ring gear is correctly locked up by the lock pawl.

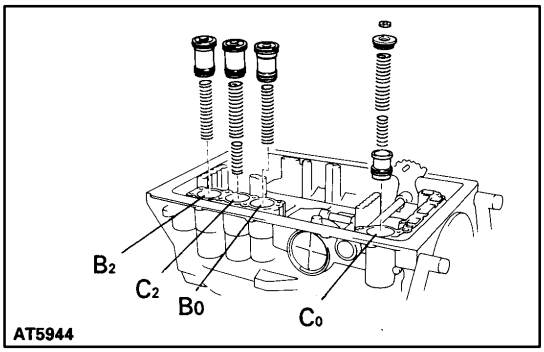

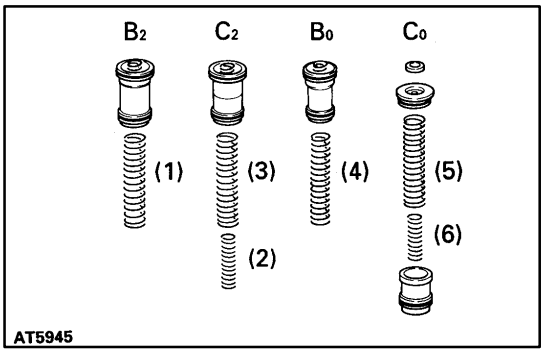

30. INSTALL ACCUMULATOR SPRINGS AND PISTONS

(a) Coat new O-rings with ATF and install them to the pistons.

(b) Install the 6 springs and 4 accumulator pistons to the bore.

HINT: The pistons are marked in relief with either C_0, B_0, C_2 or B_2 to discriminate between them.

Accmulator spring

Spring		Free length Outer diameter	Color
(1) B_2		75.25 mm (2.9626 in.) 19.97 mm (0.7862 in.)	White & Red
(2) C_2	(Inner)	40.0 mm (1.575 in.) 14.11 mm (0.5556 in.)	White & Dark Blue
(3) C_2	(Outer)	77.51 mm (3.0516 in.) 20.1 mm (0.791 in.)	Light Blue
(4) B_0		66.97 mm (2.6366 in.) 16.24 mm (0.6394 in.)	White & Blue
(5) C_0	(Outer)	63.35 mm (2.5728 in.) 20.59 mm (0.8106 in.)	White & Orange
(6) C_0	(Inner)	38.42 mm (1.5126 in.) 14.03 mm (0.5524 in.)	White

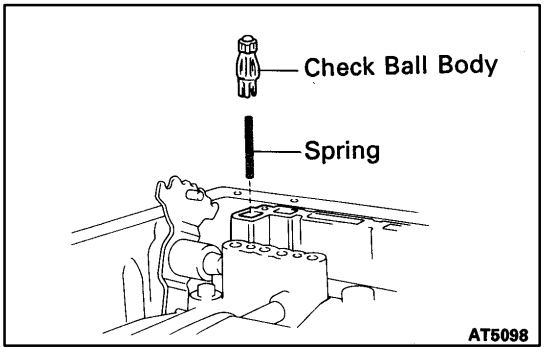

31. INSTALL SPRING AND CHECK BALL BODY

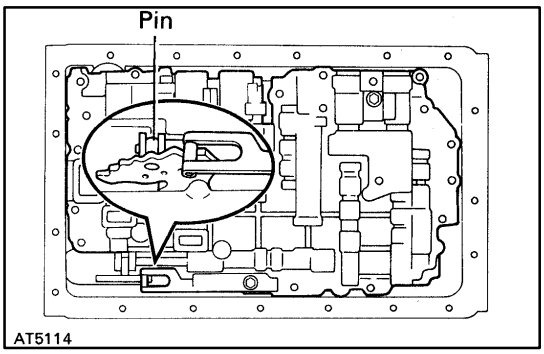

32. INSTALL VALVE BODY

(a) Align the groove of the manual valve to the pin of the lever.

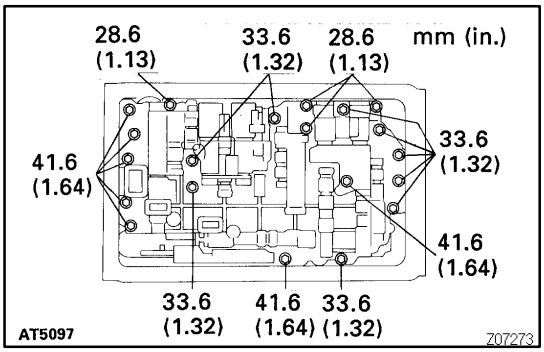

(b) Install the 20 bolts.
Torque: 10 N·m (100 kgf·cm, 7 ft·lbf)
HINT: Each bolt length (mm, in.) is indicated in the illustration.

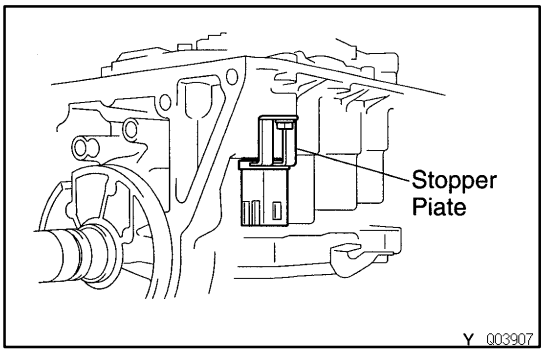

33. INSTALL SOLENOID WIRING

(a) Coat a new O-ring with ATF and install it to the solenoid wire.

(b) Install the solenoid wiring to the case and install the stopper plate.
Torque: 5.4 N·m (55 kgf·cm, 48 in.·lbf)

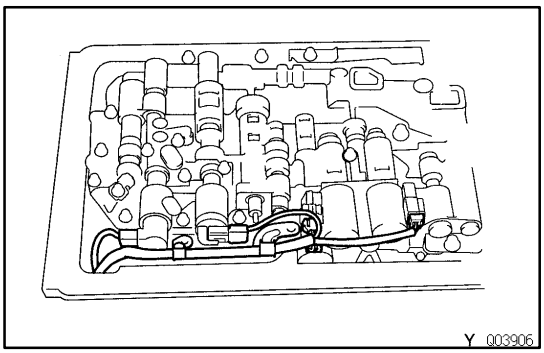

(c) Connect the 5 solenoid connectors.

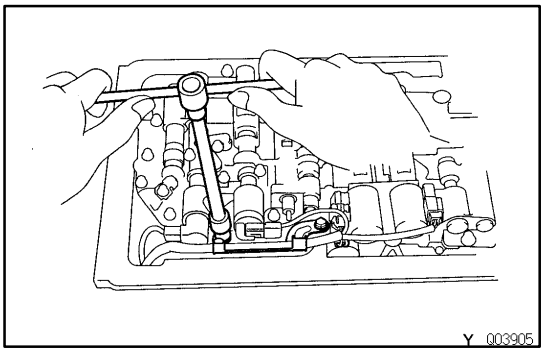

(d) Install the clamp with 2 bolts.

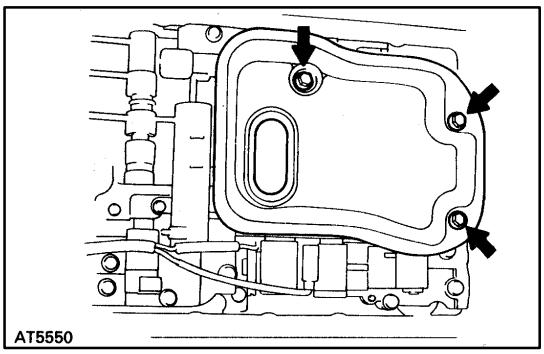

34. INSTALL OIL STRAINER AND GASKETS

Install the oil strainer and torque the 3 bolts.

Torque: 10 N·m (100 kgf·cm, 7 ft·lbf)

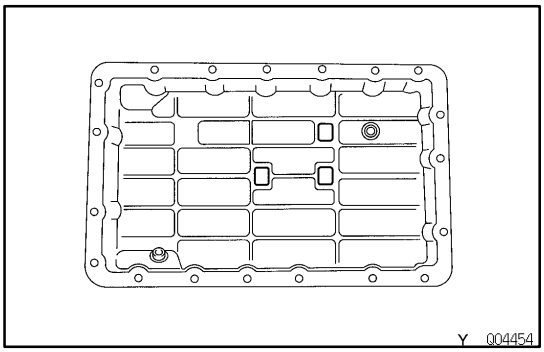

35. INSTALL OIL PAN

(a) Install the 3 magnets in the oil pan, as shown.

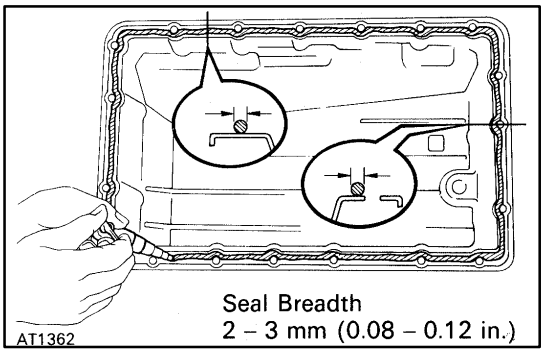

(b) Remove any packing material and be careful not to drop oil on the contacting surfaces of the transmission case and oil pan.

(c) Apply seal packing to the oil pan.

Seal packing:

Part No.08826-00090, THREE BOND 1281 or equivalent

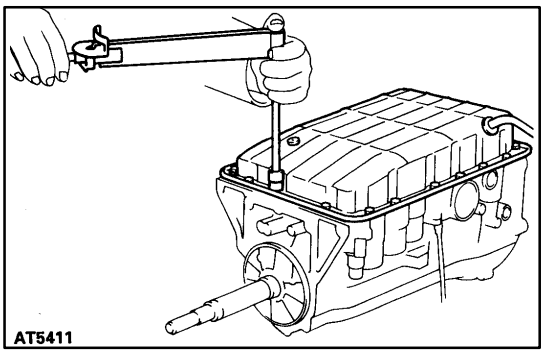

(d) Install and torque the 19 bolts.

Torque: 17 N·m (75 kgf·cm, 65 in.·lbf)

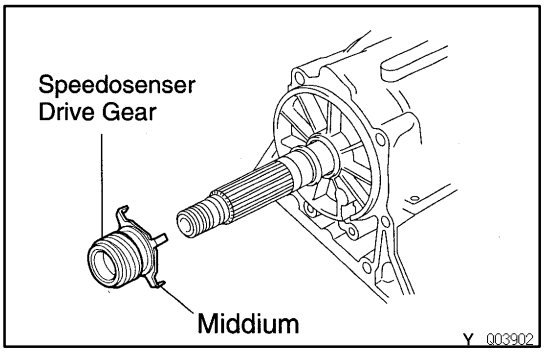

36. INSTALL SPEEDOMETER DRIVE GEAR

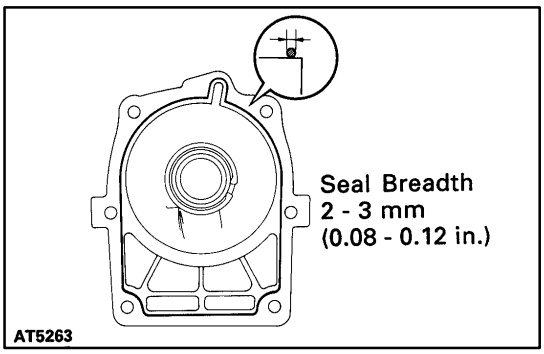

37. INSTALL EXTENSION HOUSING

(a) Clean the threads of the bolts and case with white gasoline.

(b) Apply seal packing to the extension housing.

Seal packing:

Part No.08826-00090, THREE BOND 1281 or equivalent

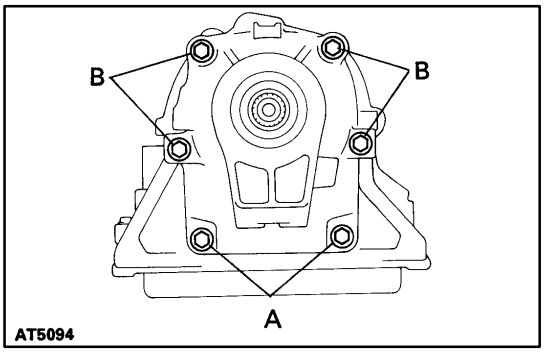

(c) Apply seal packing or equivalent to the 6 bolts.

Seal packing:

Part No.08833-00070, THREE BOND 1324 or equivalent

(d) Install and torque the 6 bolts.

Torque: 34 N·m (345 kgf·cm, 25 ft·lbf)

HINT: Each bolt length is indicated below.

Bolt length:

Bolt A: 35 mm (1.378 in.)

Bolt B: 45 mm (1.772 in.)

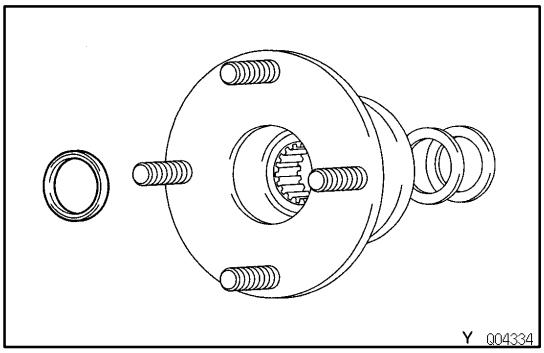

38. INSTALL TRANSMISSION OUTPUT FLANGE

(a) Install a new oil seal to the output flange.

(b) Install the output flange and 2 washers.

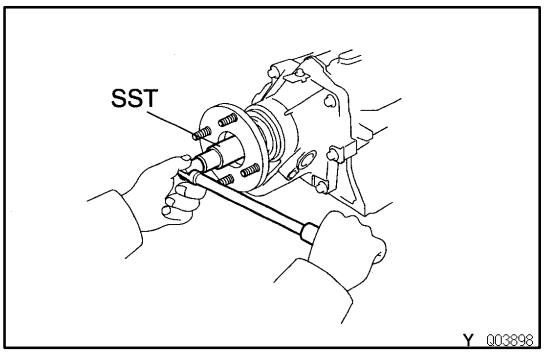

(c) Using SST, install a new nut.

SST 09060-20100

Torque: 123 N·m (1,250 kgf·cm, 90 ft·lbf)

HINT: Shift the manual valve lever to the P position.

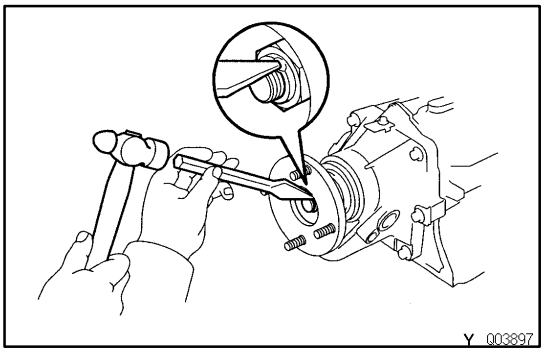

(d) Using a hammer and chisel, stake the nut.

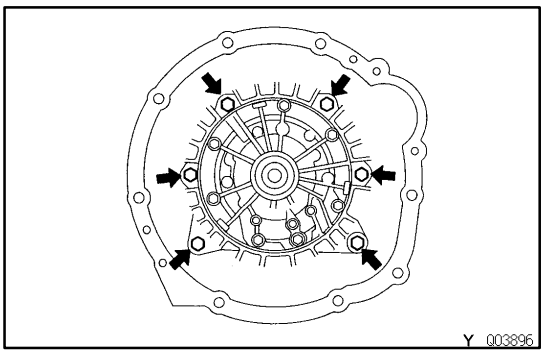

39. REMOVE TRANSMISSION CASE FROM OVERHAUL ATTACHMENT

40. INSTALL TRANSMISSION HOUSING

(a) Clean the threads of the bolts and case with white gasoline.

(b) Apply seal packing or equivalent to the 6 bolts.

Seal packing:

Part No.08833-00070, THREE BOND 1324 or equivalent

(c) Install and torque the 6 bolts.

Torque:

14 mm bolt: 34 N·m (345 kgf·cm, 25 ft·lbf)

17 mm bolt: 57 N·m (580 kgf·cm, 42 ft·lbf)

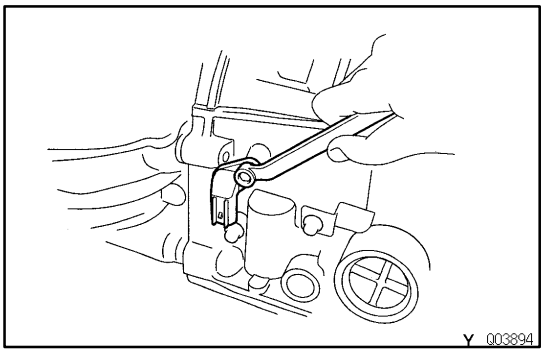

41. INSTALL O/D DIRECT CLUTCH SPEED SENSOR

(a) Coat a new O-ring with ATF and install it to the speed sensor.

(b) Install the speed sensor.

(c) Install and torque the bolts.

Torque: 5.4 N·m (55 kgf·cm, 48 in.·lbf)

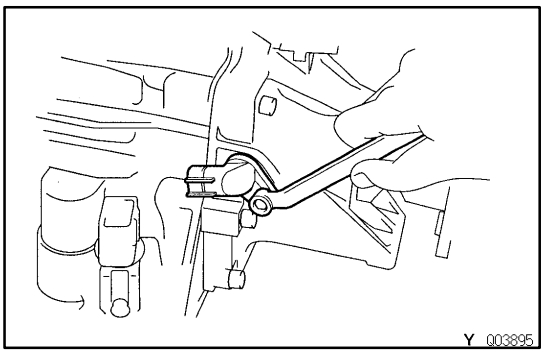

42. INSTALL NO.2 VEHICLE SPEED SENSOR

(a) Coat a new O-ring with ATF and install it to the speed sensor.

(b) Install the speed sensor.

(c) Install and torque the bolts.

Torque: 5.4 N·m (55 kgf·cm, 48 in.·lbf)

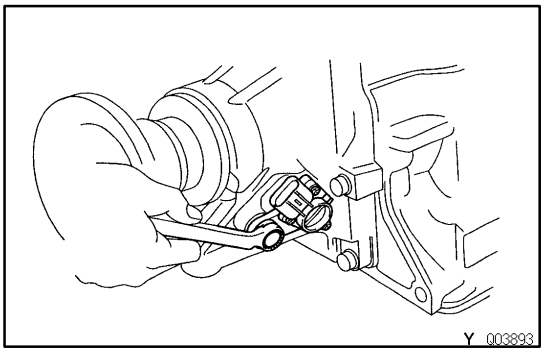

43. INSTALL NO.1 VEHICLE SPEED SENSOR

(a) Coat a new O-ring with ATF and install it to the No.1 vehicle speed sensor.

(b) Install the No.1 vehicle speed sensor.

(c) Install and torque the bolt.

Torque: 16 N·m (160 kgf·cm, 12 ft·lbf)

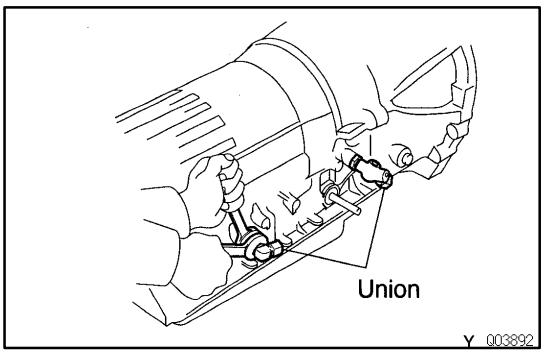

44. INSTALL UNIONS

(a) Coat 2 new O-rings with ATF and install them to each union.

(b) Install each union.

Torque: 29 N·m (300 kgf·cm, 22 ft·lbf)

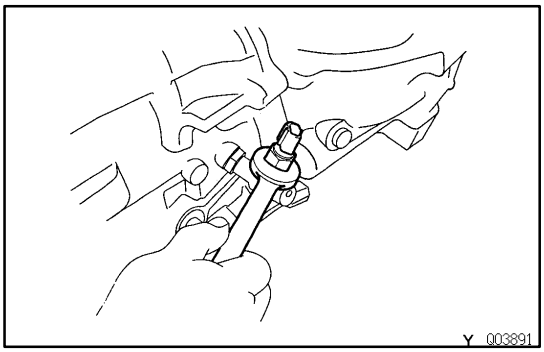

45. INSTALL OIL TEMPERATURE SENSOR

(a) Coat a new O-ring with ATF and install it to the oil temp. sensor.

(b) Install the oil temp. sensor.

Torque: 29 N·m (300 kgf·cm, 22 ft·lbf)

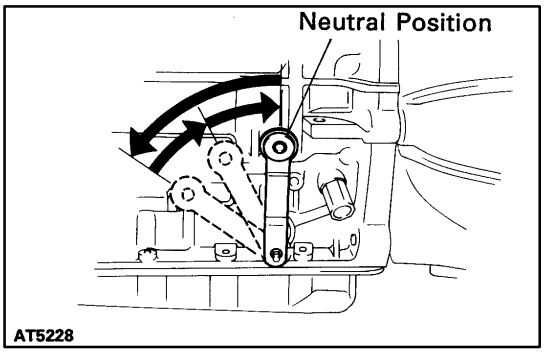

46. INSTALL PARK/NEUTRAL POSITION SWITCH

(a) Using the control shaft lever, fully turn the manual lever shaft back and return 2 notches. It is now in neutral.

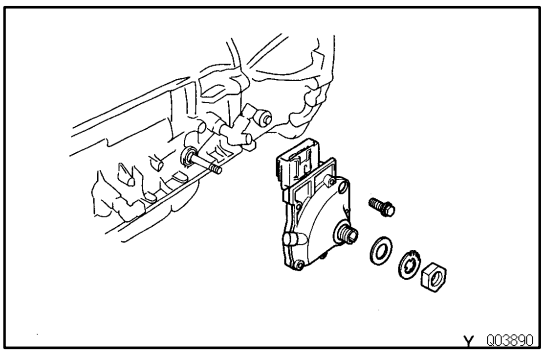

(b) Insert the park/neutral position switch onto the manual valve lever shaft and temporarily tighten the adjusting bolt.

(c) Install the grommet and a new lock washer. Install and torque the nut.

Torque: 7 N·m (70 kgf·cm, 61 in.·lbf)

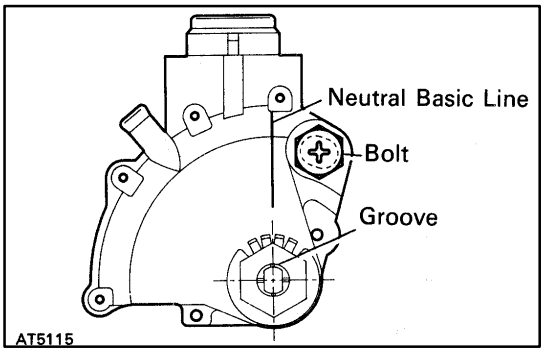

(d) Clean the threads of the adjusting bolt and case with white gasoline.

(e) Apply seal packing or equivalent to the adjusting bolt.

Seal packing:

Part No.08833-00070, THREE BOND 1324 or equivalent

(f) Align the neutral basic line and the switch groove, and tighten the adjusting bolt.

Torque: 13 N·m (130 kgf·cm, 9 ft·lbf)

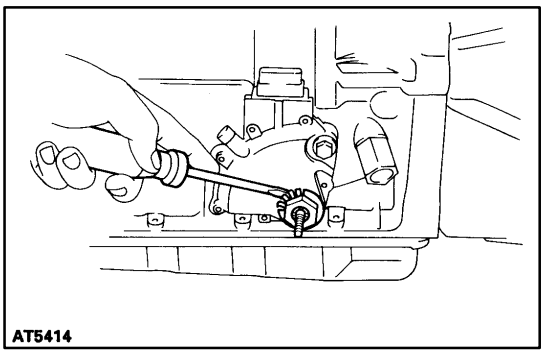

(g) Using a screwdriver, bend the tabs of the lock washer.
HINT: Bend at least 2 of the lock washer tabs.

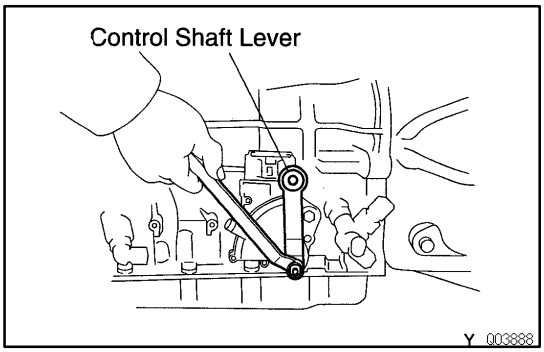

47. INSTALL CONTROL SHAFT LEVER
Torque: 16 N·m (160 kgf·cm, 12 ft·lbf)

DESCRIPTION

GENERAL DESCRIPTION

AT0FT-02

The A340E is a 4-speed, Electronically Controlled Transmission developed for use with high-performance engines. A lock-up mechanism is built into the torque converter clutch.

The A340E automatic transmission is mainly composed of the torque converter clutch, the overdrive (hereafter called O/D) planetary gear unit, a 3-speed planetary gear unit, a hydraulic control system and an electronic control system.

Sectional View

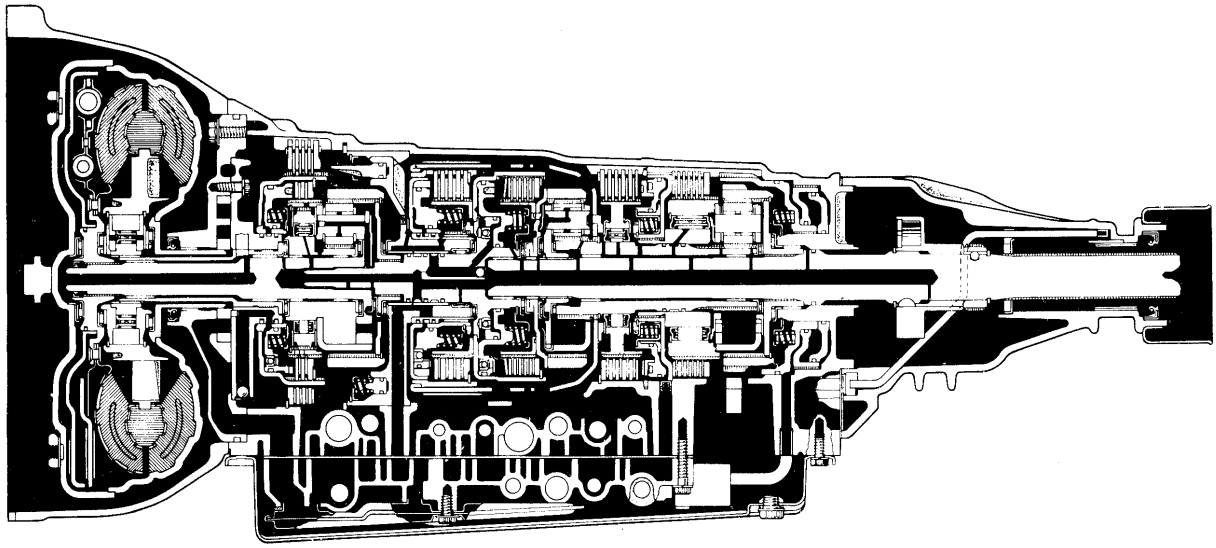

AT4366

GENERAL SPECIFICATIONS

TRUCK, 4 RUNNER, T100:

Type of Transmission		A340E
Type of Engine		3VZ-E
Torque Converter Clutch Stall Torque Ratio		C&C, T100 2.0 : 1 Others 2.15 : 1
Lock-up Mechanism		Equipped
Gear Ratio	1st Gear	2.804
	2nd Gear	1.531
	3rd Gear	1.000
	O/D Gear	0.705
	Reverse Gear	2.393
Number of Discs and Plates	(Disc and Plate)	
	O/D Direct Clutch (C_0)	2 / 2
	Forward Clutch (C_1)	5 / 5
	Direct Clutch (C_2)	4 / 4
	2nd Brake (B_2)	5 / 5
	1st and Reverse Brake (B_3)	6 / 6
	O/D Brake (B_0)	4 / 3
B_1 Band Width	mm (in.)	40 (1.57)
ATF Type		ATF DEXRON® II
Capacity (US qts, Imp.qts)	Total	7.2 (7.6, 6.3)
	Drain and Refill	1.6 (1.7, 1.4)

SUPRA:

Type of Transmission		A340E
Type of Engine		2JZ-GE
Torque Converter Clutch Stall Torque Ratio		1.9 : 1
Lock-up Mechanism		Equipped
Gear Ratio	1st Gear	2.804
	2nd Gear	1.531
	3rd Gear	1.000
	O/D Gear	0.705
	Reverse Gear	2.393
Number of Discs and Plates	(Disc and Plate)	
	O/D Direct Clutch (C_0)	2 / 2
	Forward Clutch (C_1)	5 / 5
	Direct Clutch (C_2)	4 / 4
	2nd Brake (B_2)	5 / 5
	1st and Reverse Brake (B_3)	6 / 6
	O/D Brake (B_0)	4 / 3
B_1 Band Width	mm (in.)	40 (1.57)
ATF Type		ATF DEXRON® II
Capacity (US qts, Imp.qts)	Total	7.2 (7.6, 6.3)
	Drain and Refill	1.6 (1.7, 1.4)

PREVIA:

Type of Transmission		A340E
Type of Engine		2TZ-FZE
Torque Converter Clutch Stall Torque Ratio		2.0 : 1
Lock-up Mechanism		Equipped
Gear Ratio	1st Gear	2.804
	2nd Gear	1.531
	3rd Gear	1.000
	O/D Gear	0.705
	Reverse Gear	2.393
Number of Discs and Plates	(Disc and Plate)	
	O/D Direct Clutch (C_0)	2 / 2
	Forward Clutch (C_1)	5 / 5
	Direct Clutch (C_2)	4 / 4
	2nd Brake (B_2)	5 / 5
	1st and Reverse Brake (B_3)	6 / 6
	O/D Brake (B_0)	3 / 2
B_1 Band Width	mm (in.)	40 (1.57)
ATF Type		ATF DEXRON® II
Capacity (US qts, Imp.qts)	Total	7.2 (7.6, 6.3)
	Drain and Refill	1.6 (1.7, 1.4)

OPERATION

AT02T-0E

1. OPERATING CONDITIONS

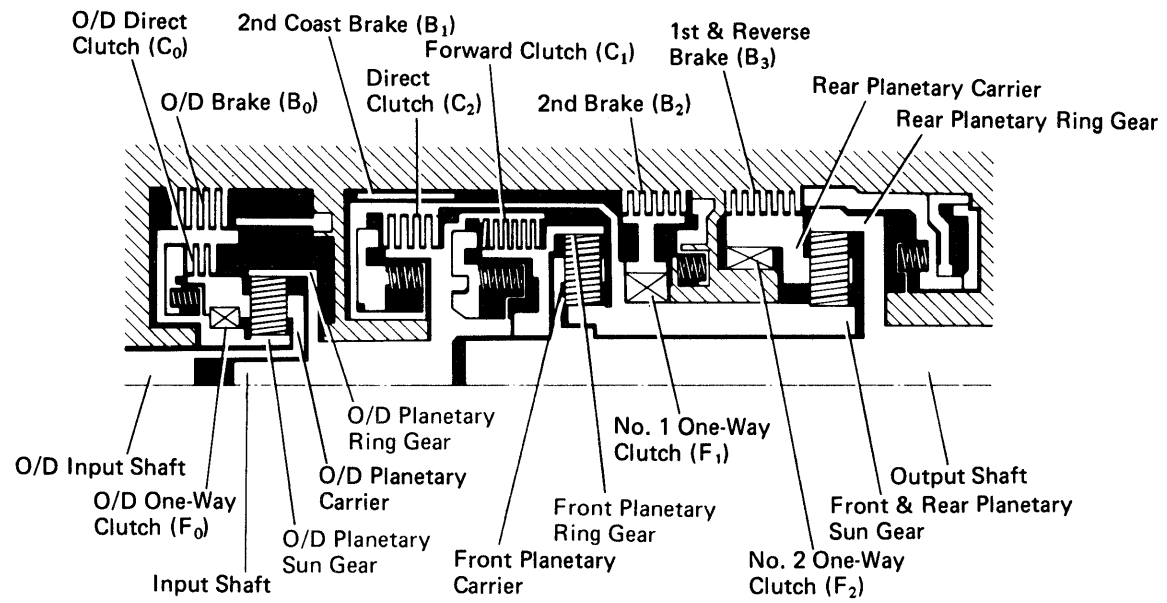

AT2157

○ ..... Operating

Shift lever position	Gear position	C_0	C_1	C_2	B_0	B_1	B_2	B_3	F_0	F_1	F_2
P	Parking	○									
R	Reverse	○		○				○	○		
N	Neutral	○									
D	1st	○	○						○		○
	2nd	○	○				○		○	○	
	3rd	○	○	○			○		○		
	O/D		○	○	○		○				
2	1st	○	○						○		○
	2nd	○	○			○	○		○	○	
	3rd	○	○	○			○		○		
L	1st	○	○					○	○		○
	*2nd	○	○			○	○		○	○	

* Down-shift only in the L position and 2nd gear — no up-shift.

V03089

2. FUNCTION OF COMPONENTS

NOMENCLATURE	OPERATION
O/D Direct Clutch (C_0)	Connects overdrive sun gear and overdrive carrier
O/D Brake (B_0)	Prevents overdrive sun gear from turning either clockwise or counterclockwise
O/D One-Way Clutch (F_0)	When transmission is being driven by engine, connects overdrive sun gear and overdrive carrier
Forward Clutch (C_1)	Connects input shaft and front planetary ring gear
Direct Clutch (C_2)	Connects input shaft and front & rear planetary sun gear
2nd Coast Brake (B_1)	Prevents front & rear planetary sun gear from turning either clockwise or counterclockwise
2nd Brake (B_2)	Prevents outer race of F_1 from turning either clockwise or counterclockwise, thus preventing front & rear planetary sun gear from turning counterclockwise
1st & Reverse Brake (B_3)	Prevents rear planetary carrier from turning either clockwise or counterclockwise
No.1 One-Way Clutch (F_1)	When B_2 is operating, prevents front & rear planetary sun gear from turning counterclockwise
No.2 One-Way Clutch (F_2)	Prevents rear planetary carrier from turning counterclockwise

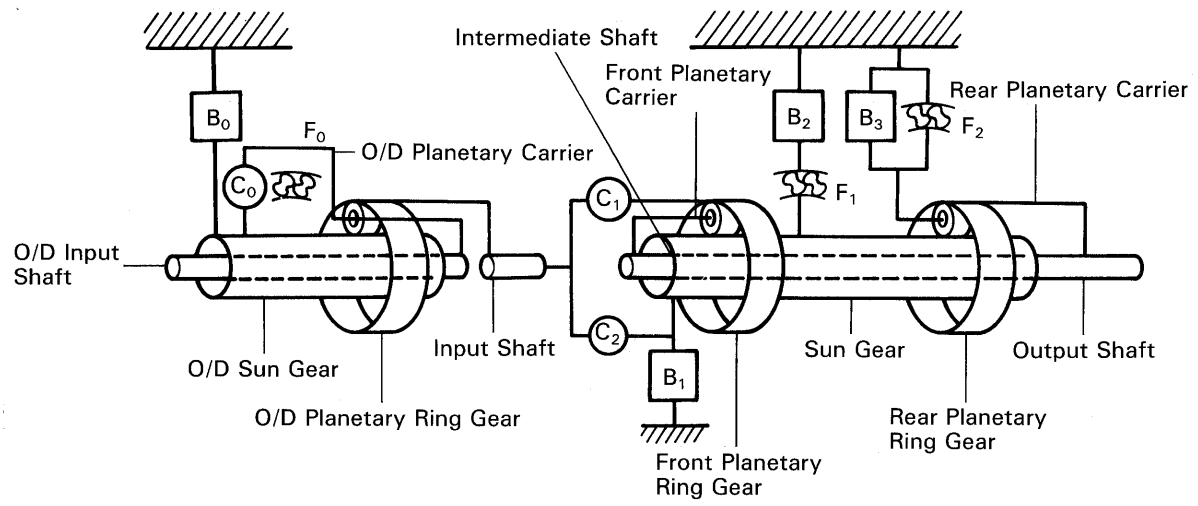

D or 2 Position 1st Gear

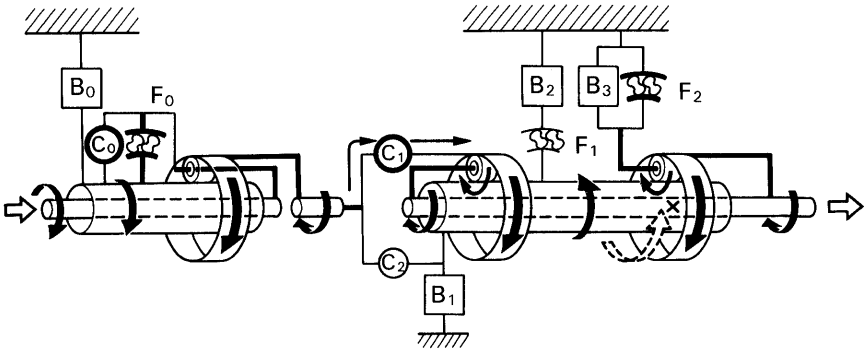

AT6675

D Position 2nd Gear

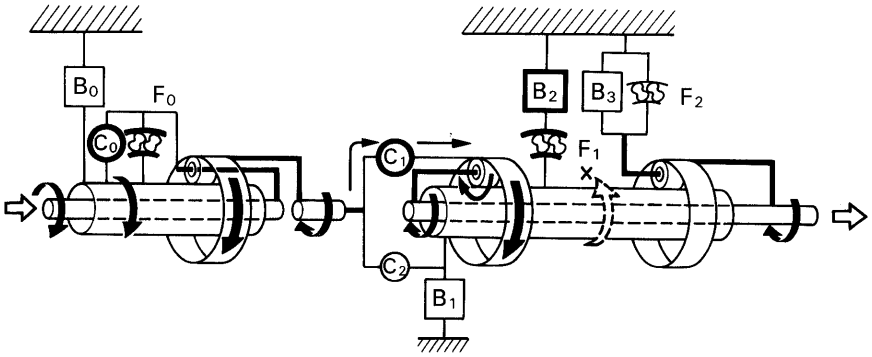

AT6676

D or 2 Position 3rd Gear

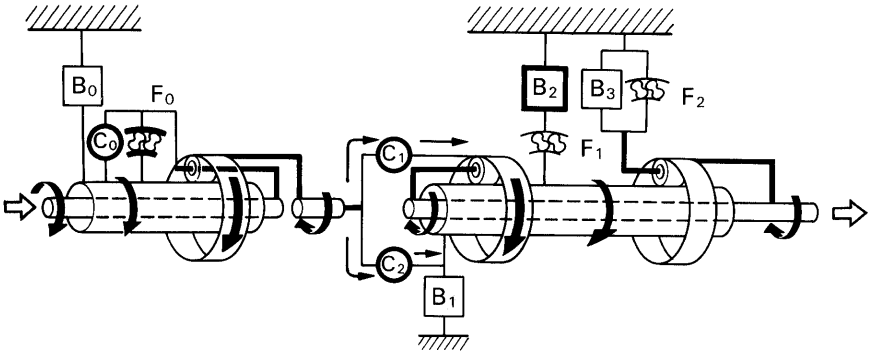

AT6677

D Position O/D

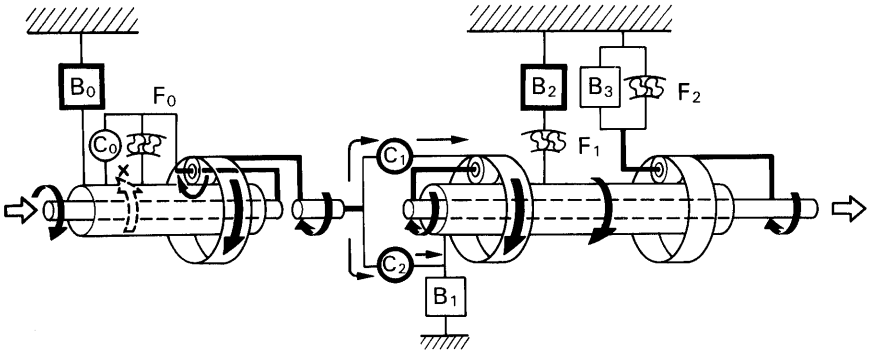

AT6678

V02110

2 or L Position 2nd Gear

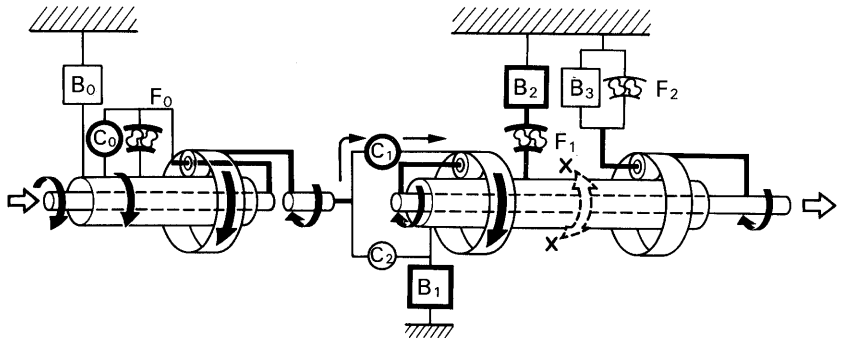

AT6679

L Position 1st Gear

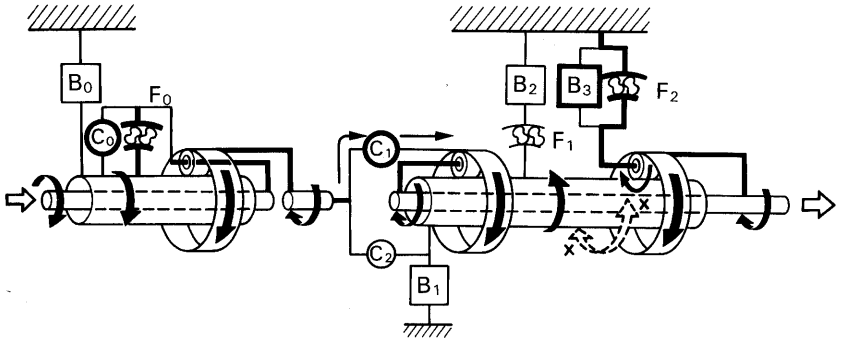

AT6680

R Position Reverse Gear

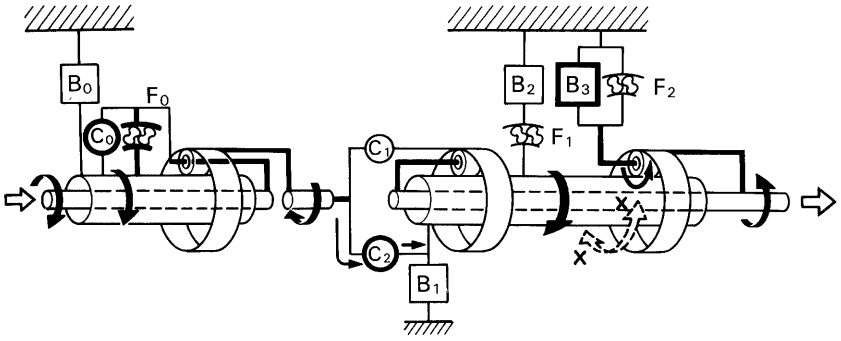

AT6681

V02111

3. HYDRAULIC CONTROL SYSTEM

The hydraulic control system is composed of the oil pump, the valve body, the solenoid valves, and the clutches and brakes, as well as the fluid passages which connect all of these components. Based on the hydraulic pressure created by the oil pump, the hydraulic control system governs the hydraulic pressure acting on the torque converter clutch, clutches and brakes in accordance with the vehicle driving conditions.

There are 3 solenoid valves on the valve body.

The No.1 and No.2 solenoid valves are turned on and off by signals from the ECM to operate the shift valves and change the gear shift position.

The lock-up solenoid valve is operated by signals from the ECM to engage or disengage the lock-up clutch of the torque converter clutch.

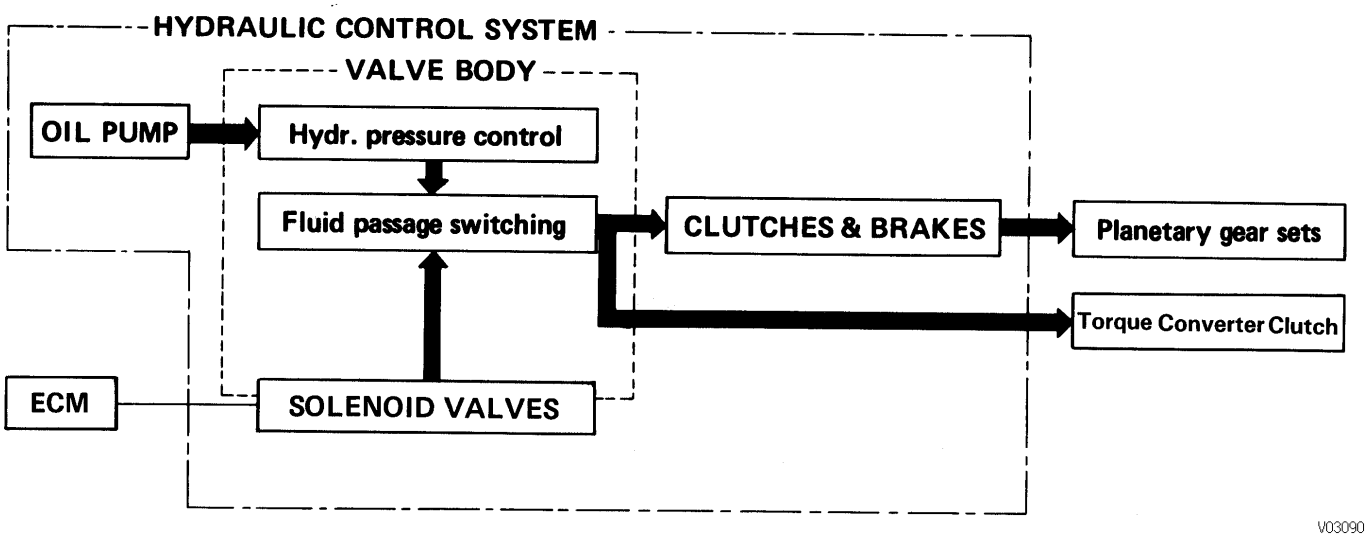

★ LINE PRESSURE

Line pressure is the most basic and important pressure used in the automatic transmission, because it is used to operate all of the clutches and brakes in the transmission.

If the primary regulator valve does not operate correctly, line pressure will be either too high or too low. Line pressure that is too high will lead to shifting shock and consequent engine power loss due to the greater effort required of the oil pump; line pressure that is too low will cause slippage of clutches and brakes, which will, in extreme cases, prevent the vehicle from moving. Therefore, if either of these problems are noted, the line pressure should be measured to see if it is within specification.

★ THROTTLE PRESSURE

Throttle pressure is always kept in accordance with the opening angle of the engine throttle valve. This throttle pressure acts on the primary regulator valve and, the line pressure is regulated according to the throttle valve opening.

In the hydraulically controlled automatic transmission, throttle pressure is used for regulating line pressure and as signal pressure for up-shift and down-shift of the transmission. In the electronically controlled transmission, however, throttle pressure is used only for regulating line pressure. Consequently, improper adjustment of the transmission throttle cable may result in a line pressure that is too high or too low. This, in turn, will lead to shifting shock or clutch and brake slippage.

4. ELECTRONIC CONTROL SYSTEM

The electronic control system, which controls the shift points and the operation of the lock-up clutch, is composed of the following 3 parts:

1. Sensors

These sensors sense the vehicle speed, throttle opening and other conditions and send these data to the ECM in the form of electrical signals.

2. ECM

The ECM determines the shift and lock-up timing based upon the signals from sensors, and controls the solenoid valves of the hydraulic control unit accordingly.

3. Actuators

These are 3 solenoid valves that control hydraulic pressure acting on the hydraulic valves to control shifting and lock-up timing.

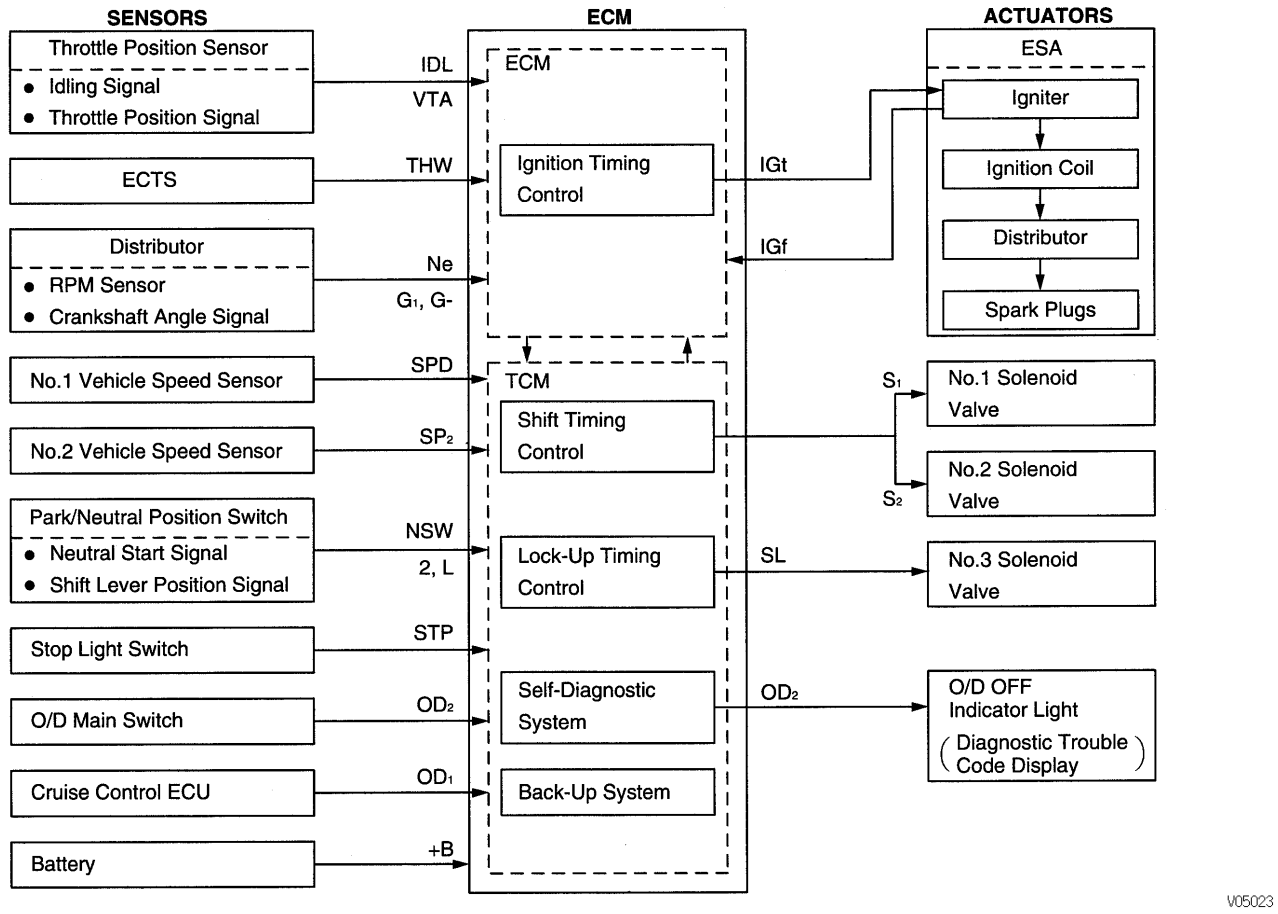

COMPONENT PARTS REMOVAL

AT0SF-01

COMPONENTS
(TRUCK, 4 RUNNER)

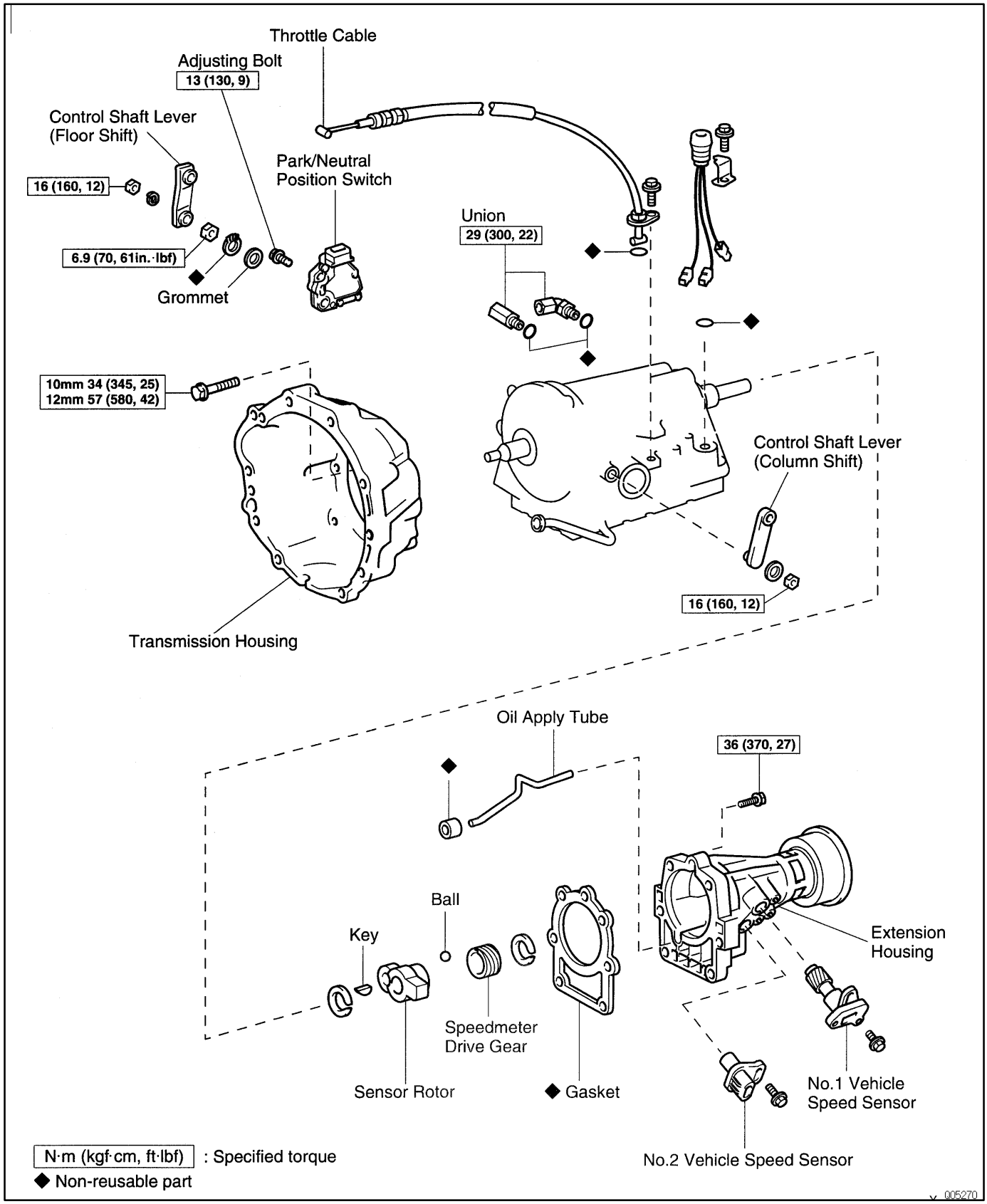

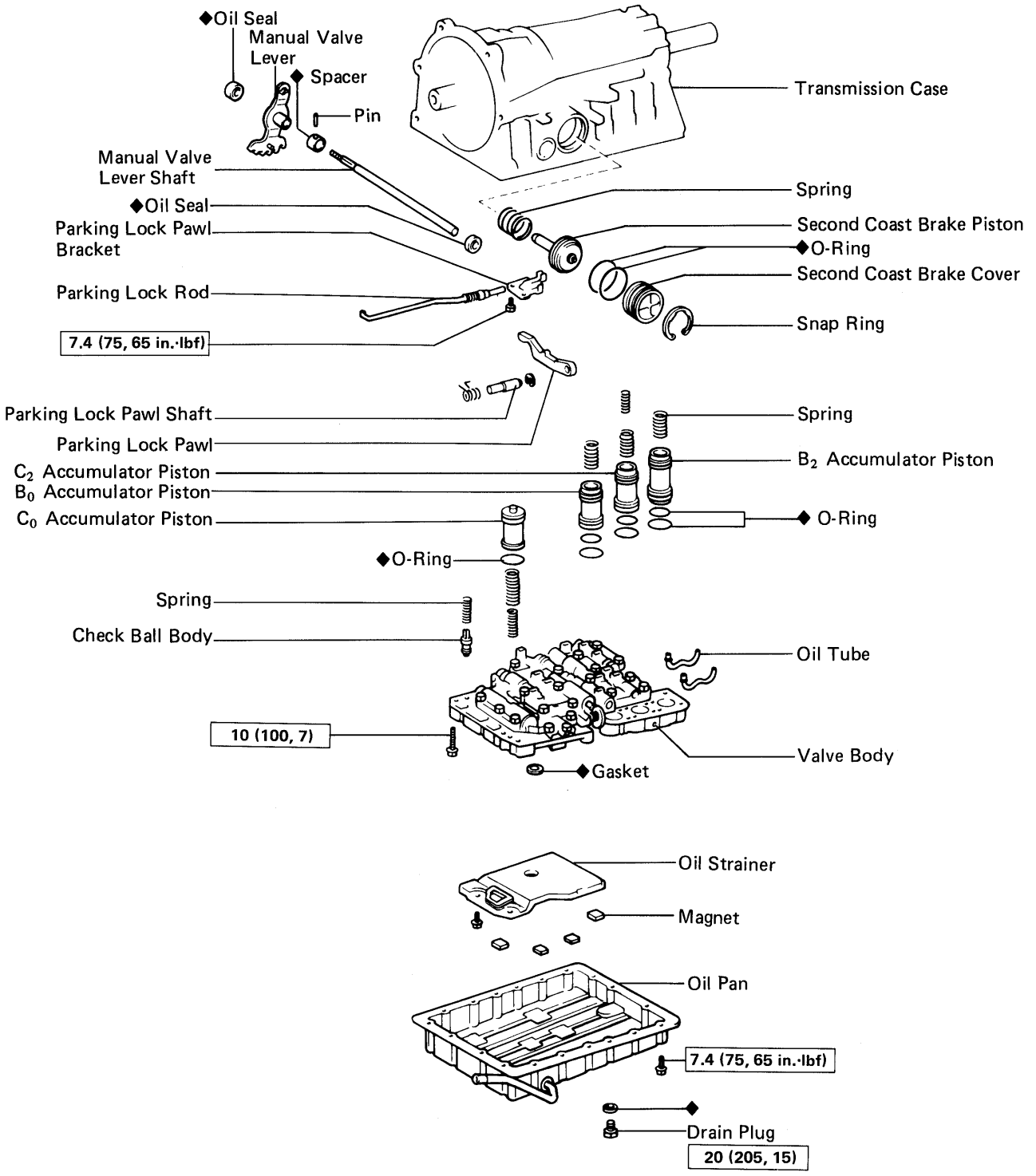

N·m (kgf·cm, ft·lbf) : Specified torque

◆ Non-reusable part

Q00630

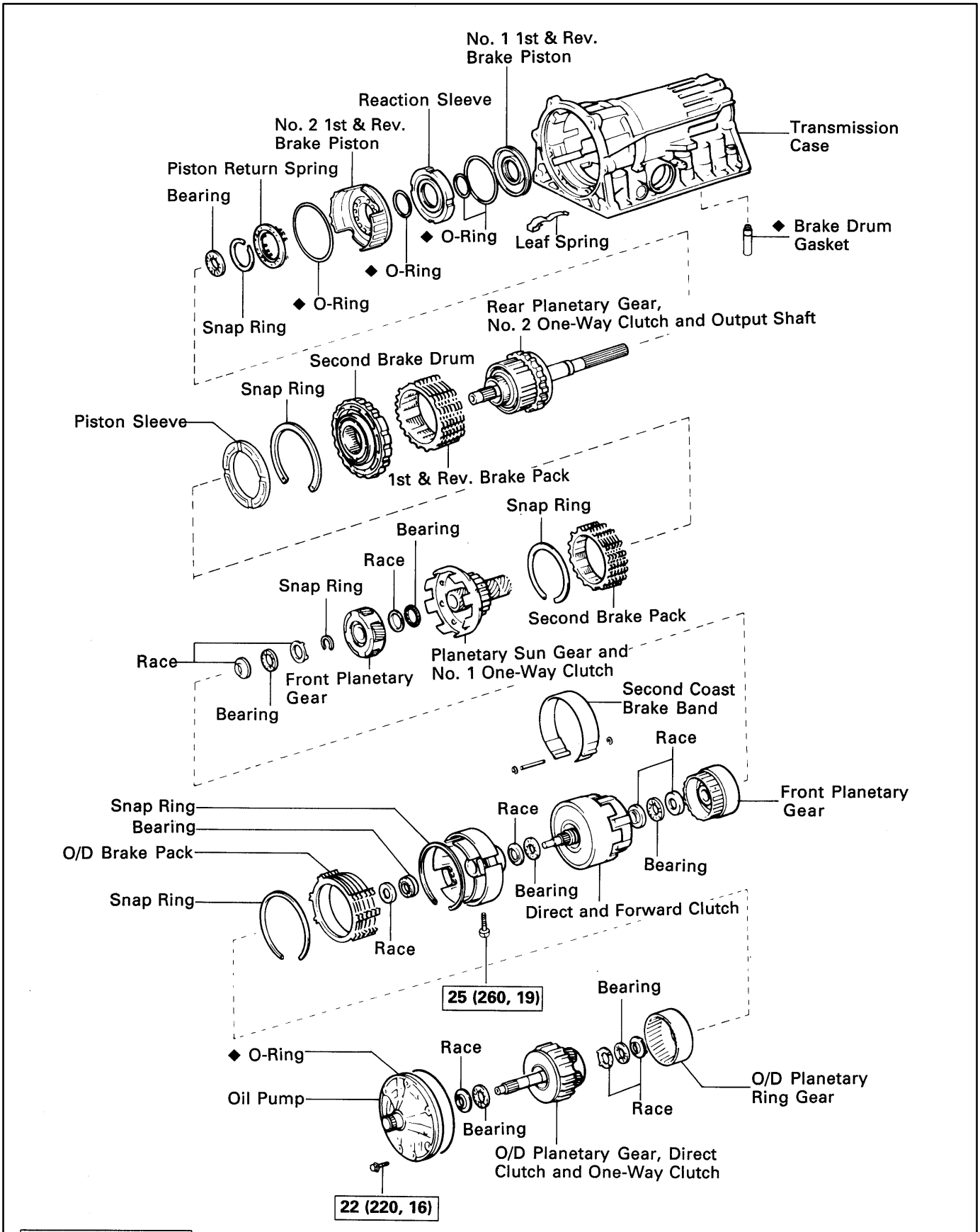

N·m (kgf·cm, ft·lbf) : Specified torque

◆ Non-reusable part

AT5654

COMPONENTS
(T100)

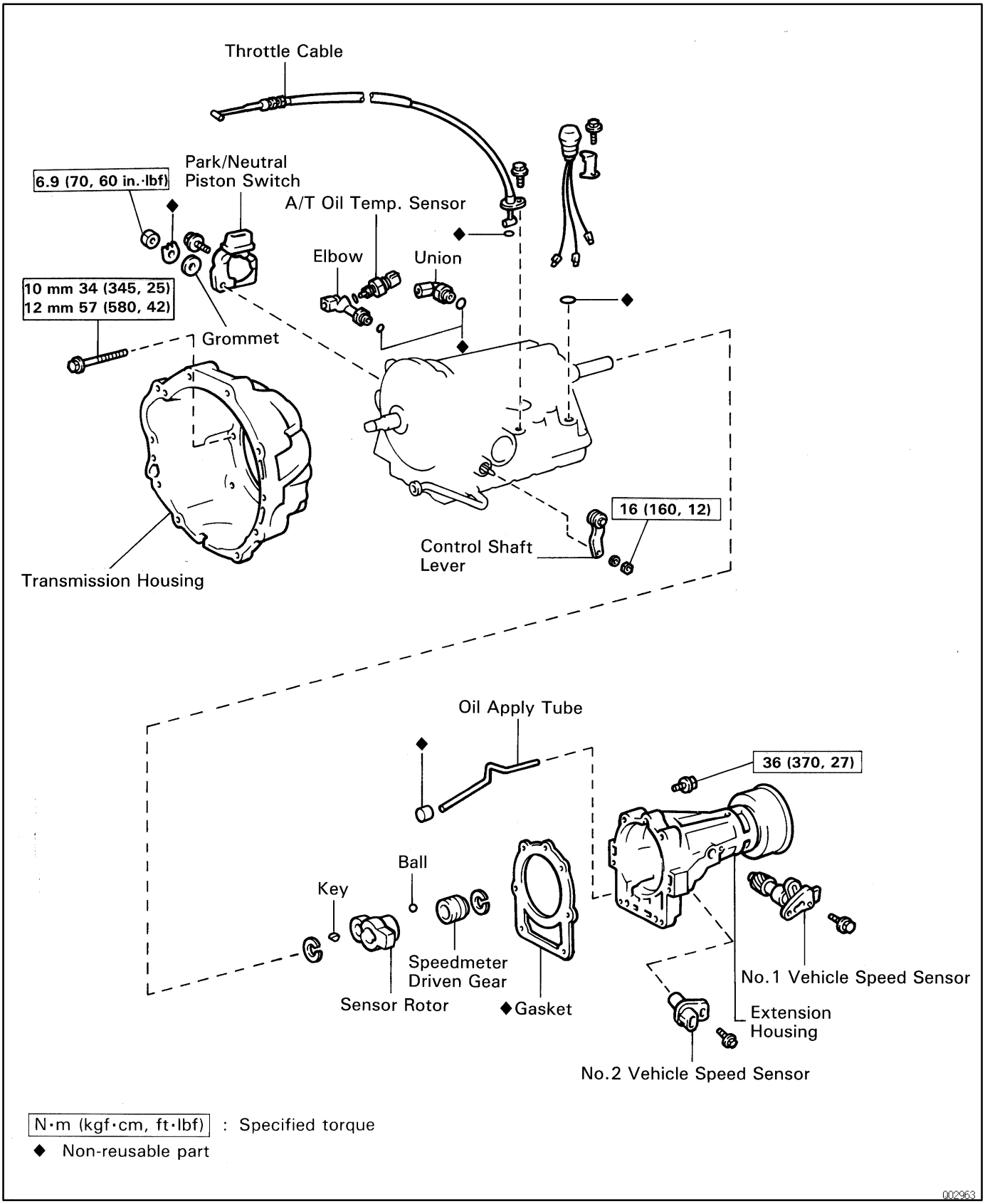

N·m (kgf·cm, ft·lbf) : Specified torque

◆ Non-reusable part

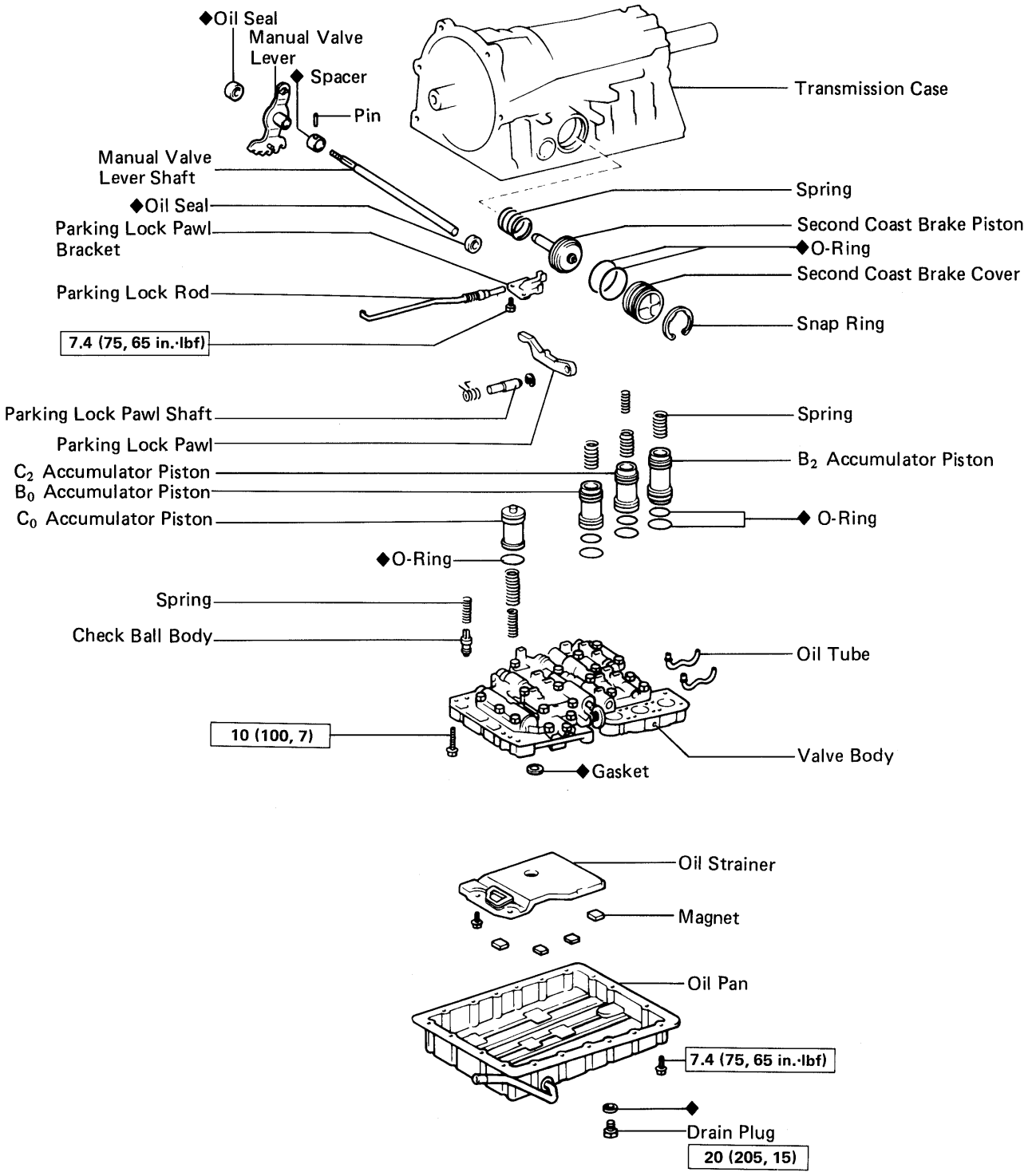

N·m (kgf·cm, ft·lbf) : Specified torque

◆ Non-reusable part

Q00630

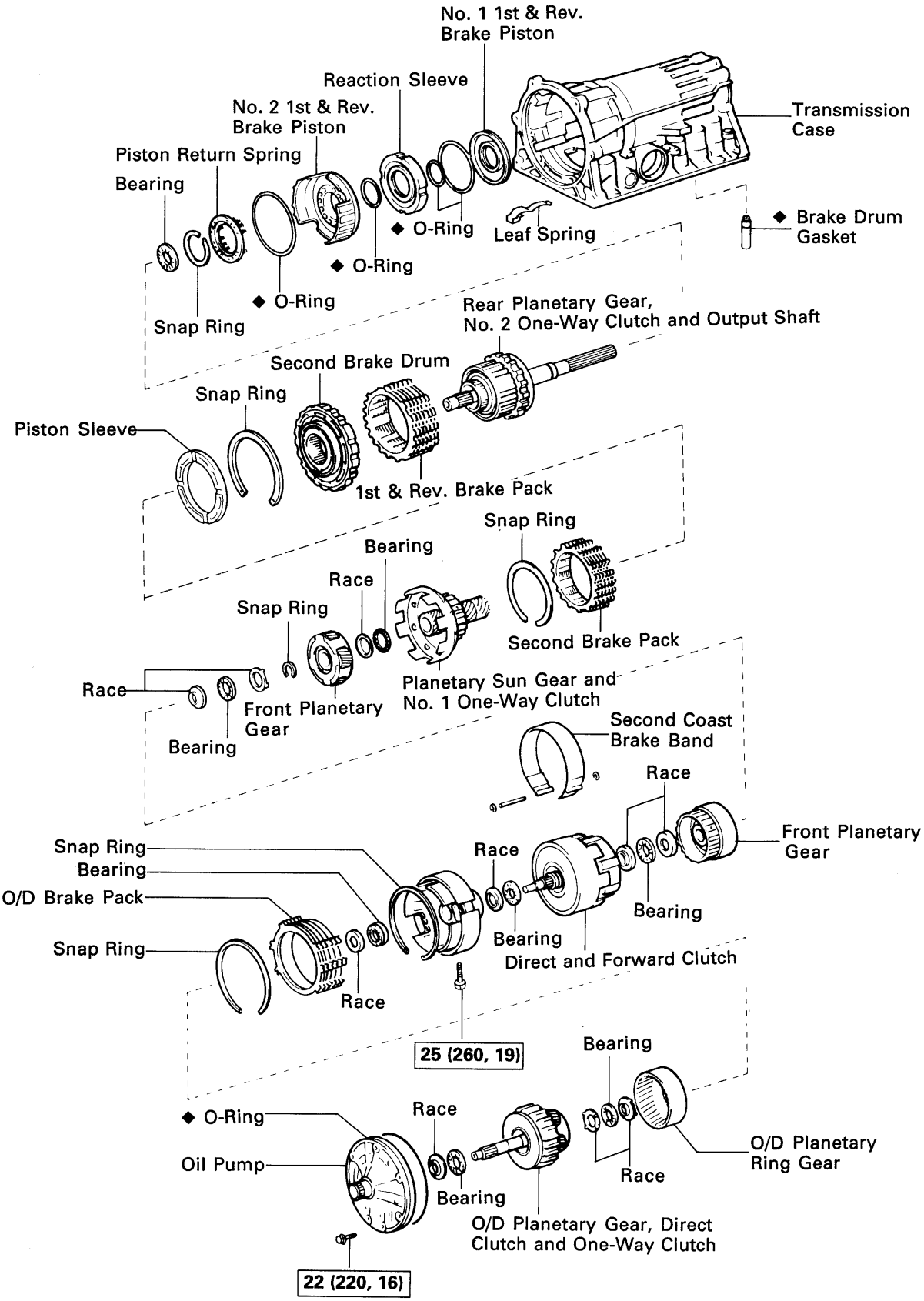

N·m (kgf·cm, ft·lbf) : Specified torque

◆ Non-reusable part

AT5654

COMPONENTS (SUPRA)

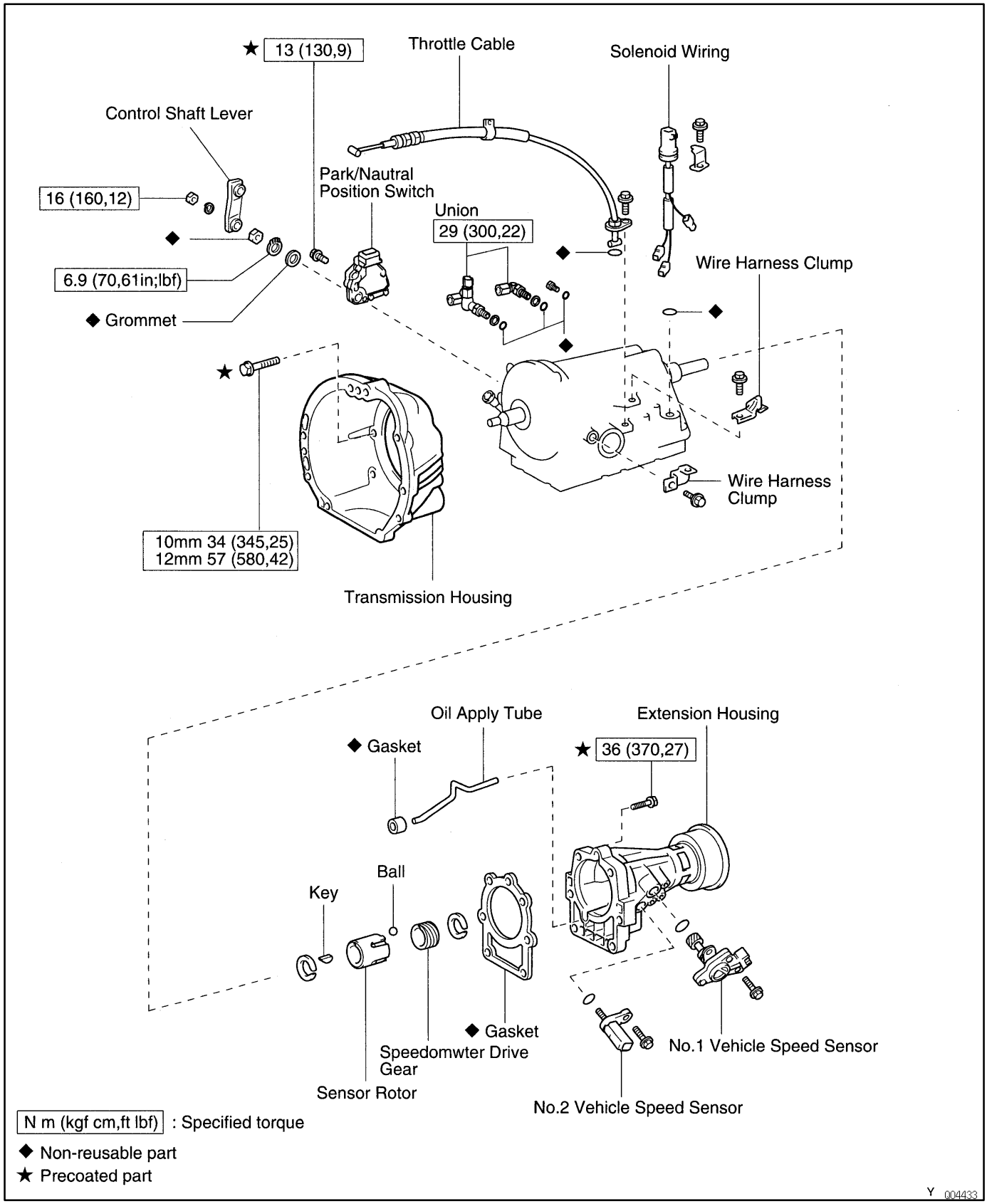

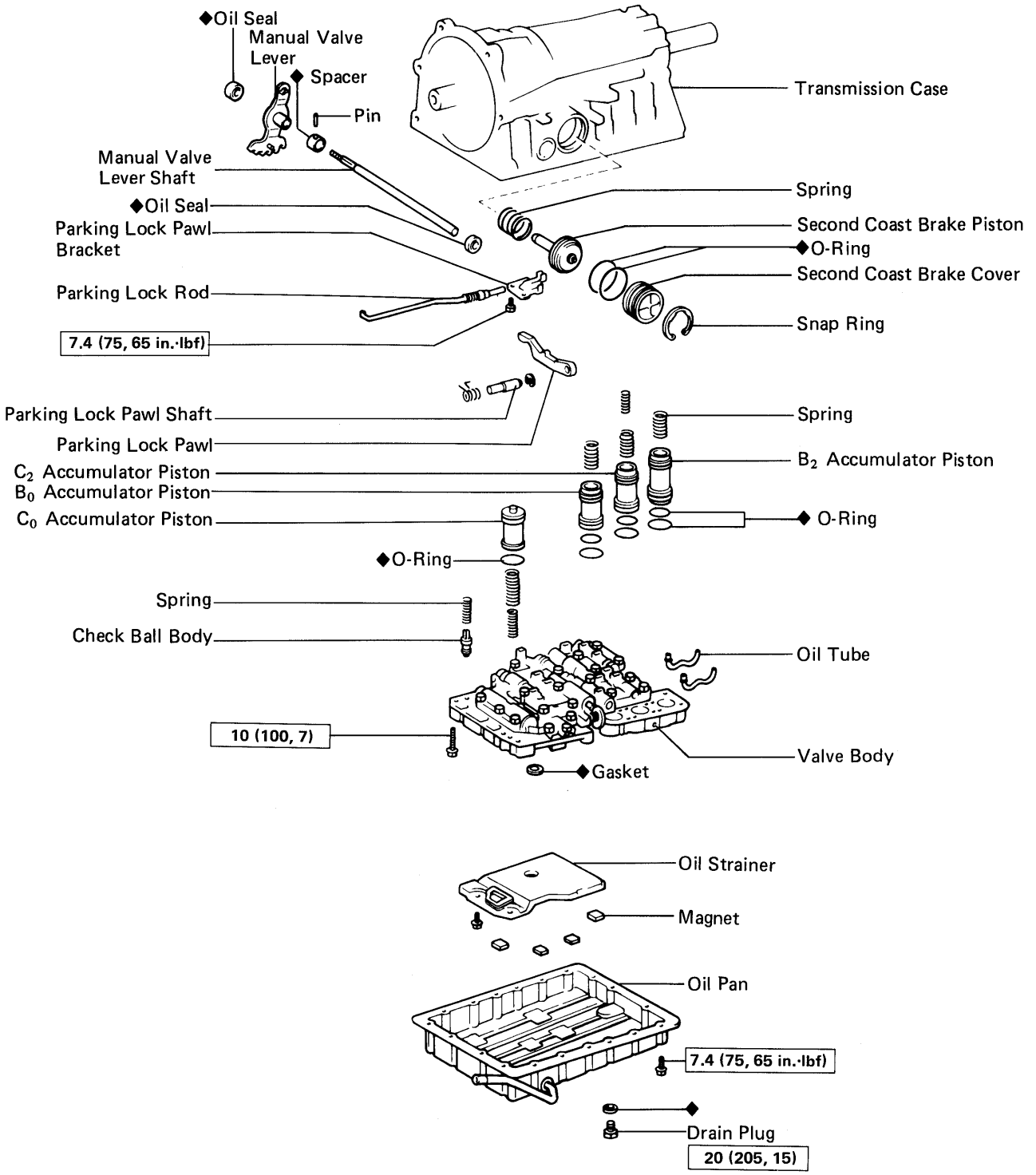

N·m (kgf·cm, ft·lbf) : Specified torque

◆ Non-reusable part

Q00630

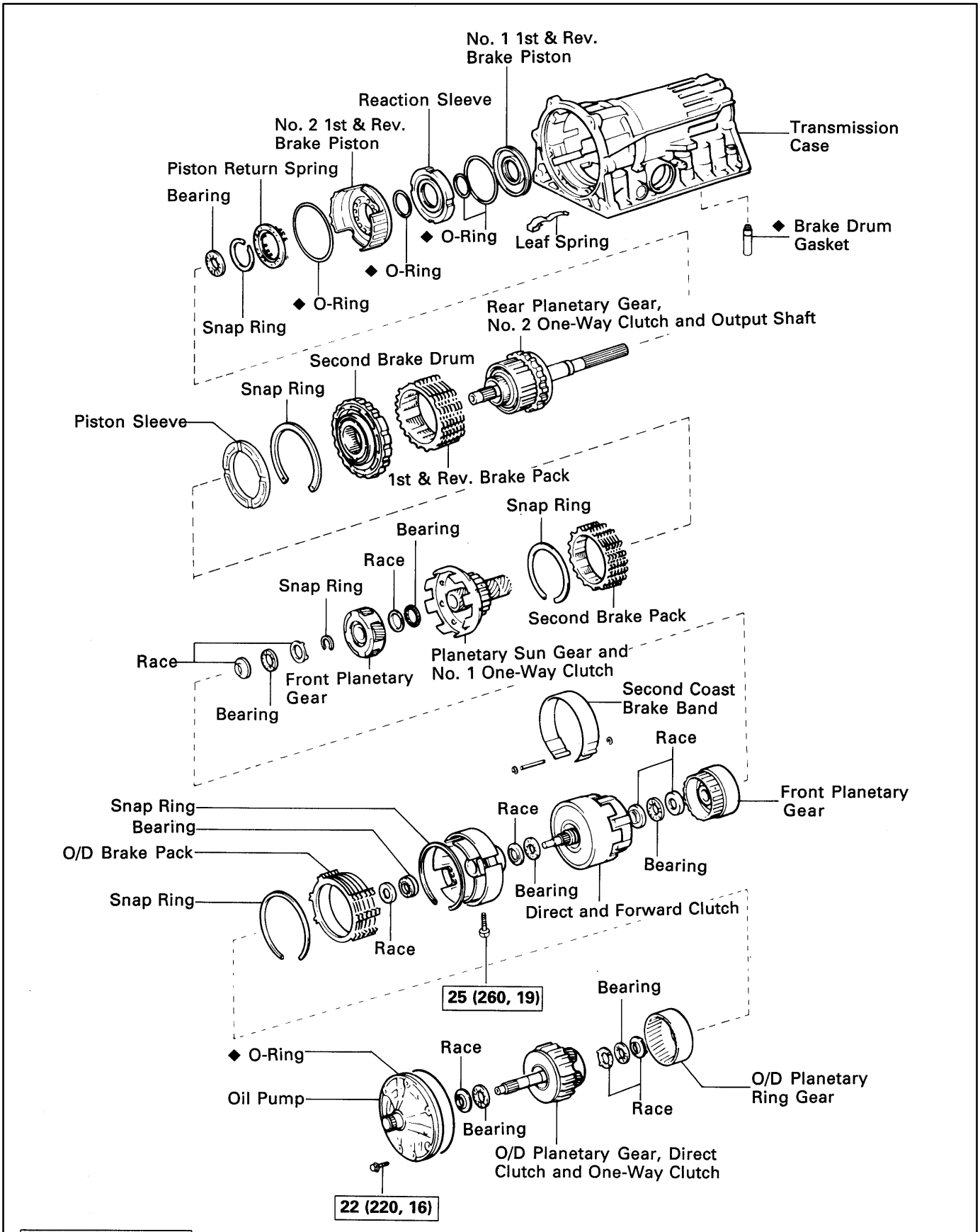

N·m (kgf·cm, ft·lbf) : Specified torque

◆ Non-reusable part

AT5654

COMPONENTS
(PREVIA)

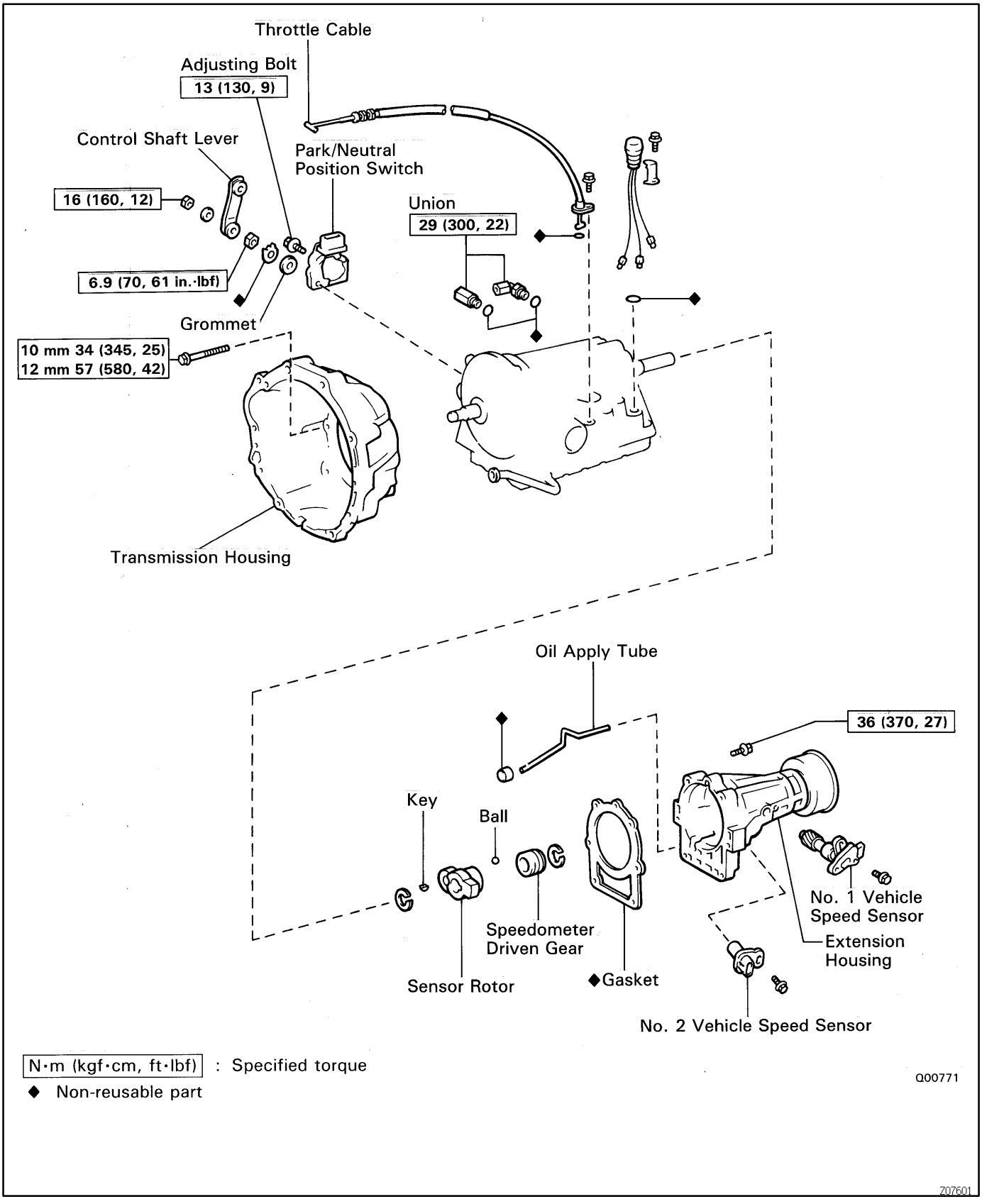

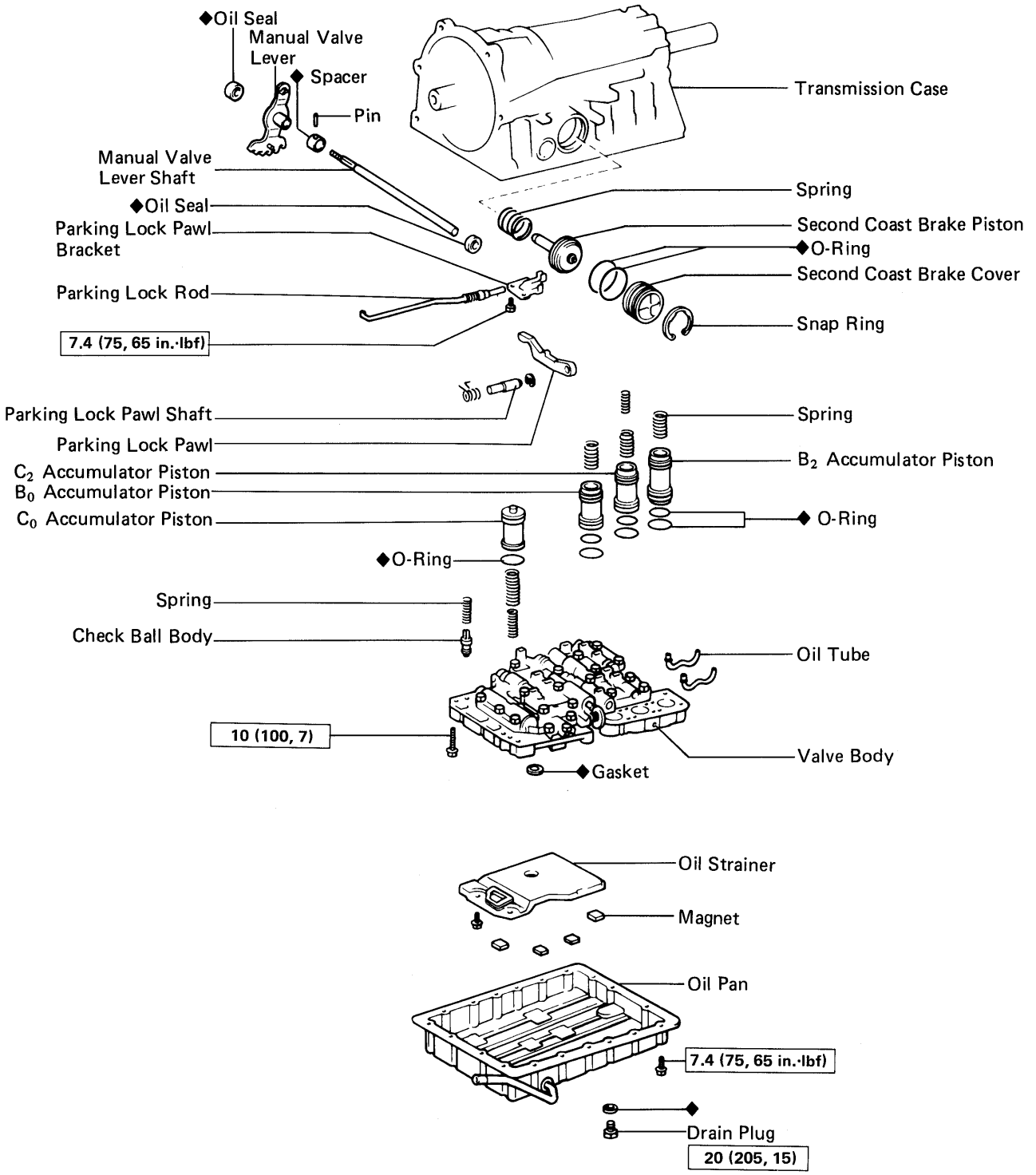

N·m (kgf·cm, ft·lbf) : Specified torque

◆ Non-reusable part

Q00630

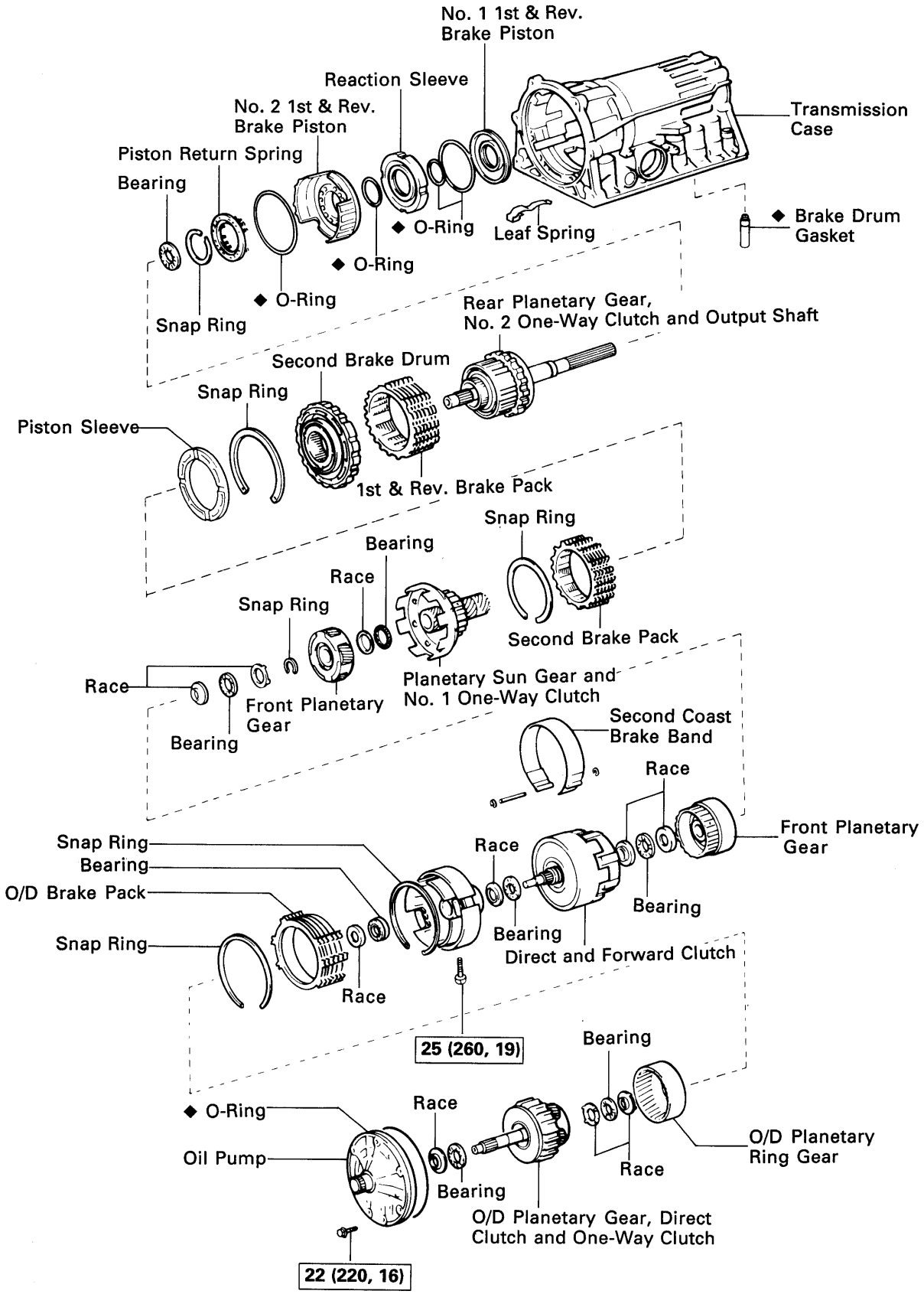

N·m (kgf·cm, ft·lbf) : Specified torque

◆ Non-reusable part

AT5654

AT0SG-01

TRANSMISSION DISASSEMBLY

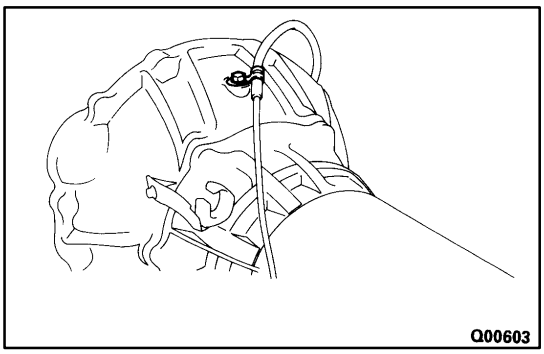

1. SUPRA, PREVIA:
REMOVE WIRE HARNESS CLAMP AND THROTTLE CABLE CLAMP

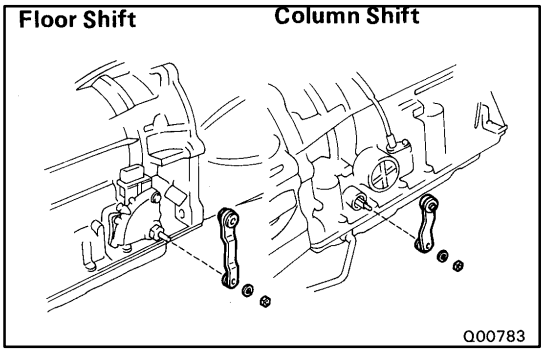

2. REMOVE TRANSMISSION CONTROL SHAFT LEVER

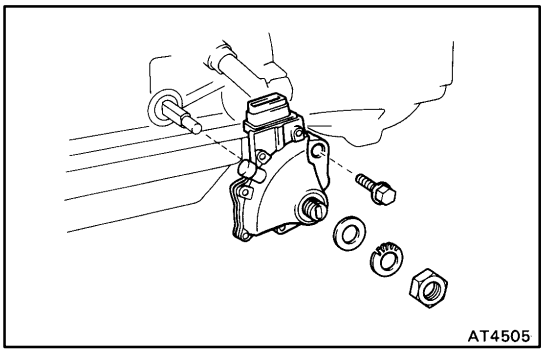

3. REMOVE PARK/NEUTRAL POSITION SWITCH
(a) Unstake the lock washer.
(b) Remove the nut and bolt, and then remove the park/neutral position switch.
(c) Remove the lock washer and grommet.

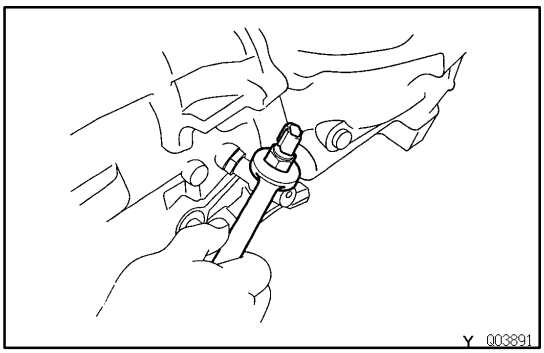

4. SUPRA, T100:
REMOVE A/T OIL TEMPERATURE SENSOR
(a) Remove the oil temperature sensor.
(b) Remove the O-ring from the sensor.

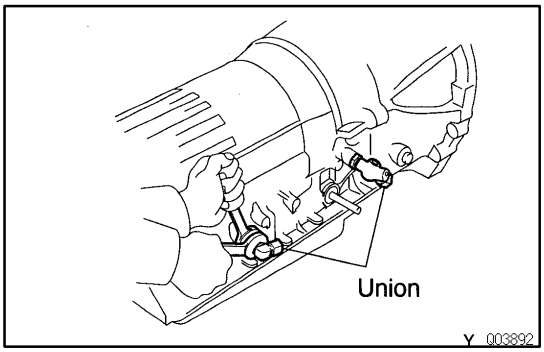

5. REMOVE UNIONS
(a) Remove the 2 unions.
(b) Remove the O-rings from both unions.

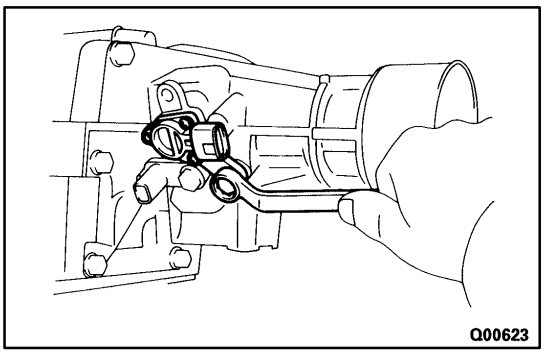

6. REMOVE NO.1 VEHICLE SPEED SENSOR

(a) Remove the No.1 vehicle speed sensor.
(b) Remove the O-ring from it.

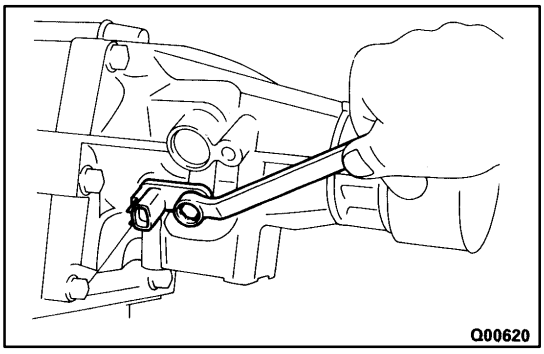

7. REMOVE NO.2 VEHICLE SPEED SENSOR

(a) Remove the No.2 vehicle speed sensor.
(b) Remove the O-ring from it.

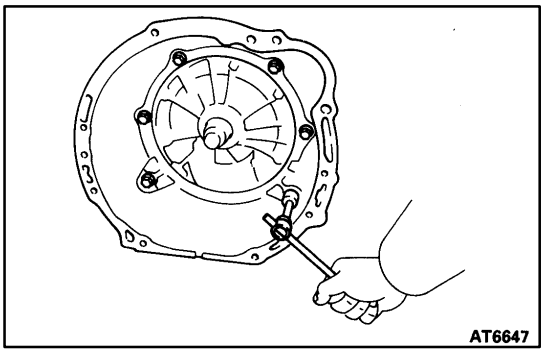

8. REMOVE TRANSMISSION HOUSING

(a) Remove the 6 bolts.
(b) Remove the transmission housing.

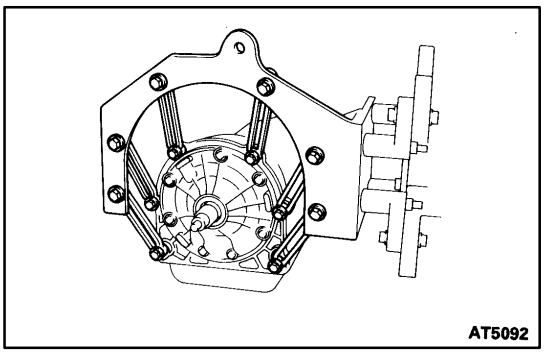

9. INSTALL TRANSMISSION CASE

Install the transmission case on the overhaul attachment.

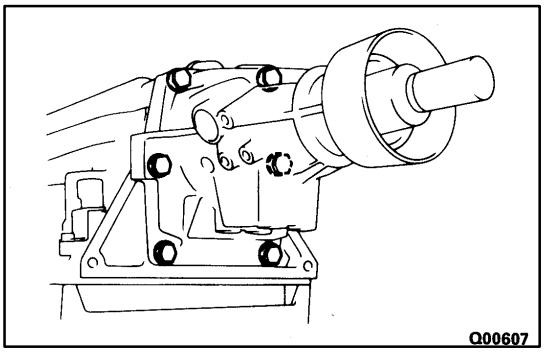

10. REMOVE EXTENSION HOUSING

(a) Remove the 6 bolts.
(b) Remove the extension housing.

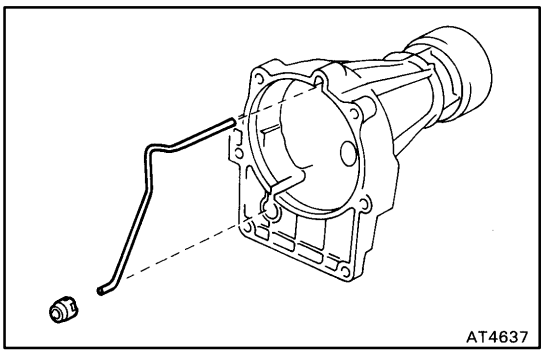

(c) Remove the oil apply tube and gasket from the extension housing.

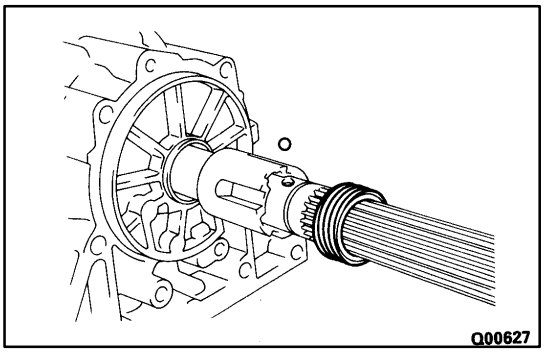

11. SUPRA:
REMOVE SPEEDOMETER DRIVE GEAR AND BALL

(a) Using snap ring pliers, remove the snap ring.
(b) Remove the speedometer drive gear and ball.

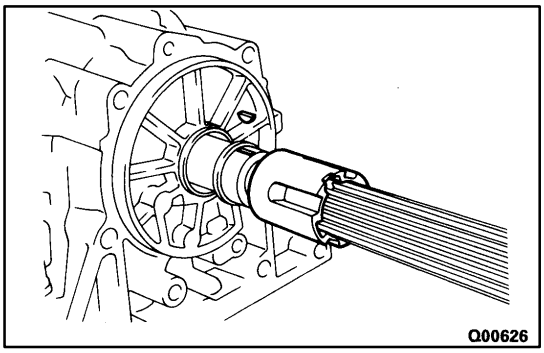

12. SUPRA:
REMOVE SENSOR ROTOR AND KEY

(a) Remove the sensor rotor and key.
(b) Using snap ring pliers, remove the snap ring.

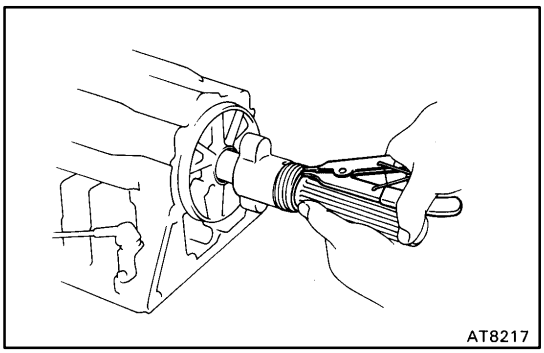

13. OTHERS:
REMOVE SPEEDOMETER DRIVE GEAR AND BALL

(a) Using snap ring pliers, remove the snap ring.
(b) Remove the speedometer drive gear and ball.

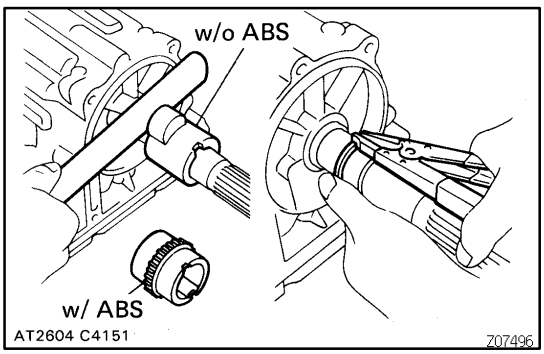

14. OTHERS:
REMOVE SENSOR ROTOR AND KEY

(a) Remove the sensor rotor and key.
(b) Using snap ring pliers, remove the snap ring.

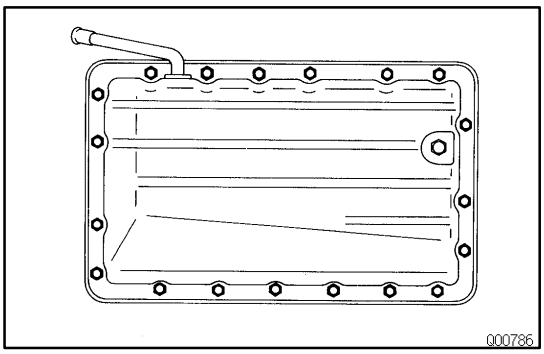

15. REMOVE OIL PAN

NOTICE: Do not turn the transmission over as this will contaminate the valve body with any foreign matter at the bottom on the pan.

(a) Remove the 19 bolts.

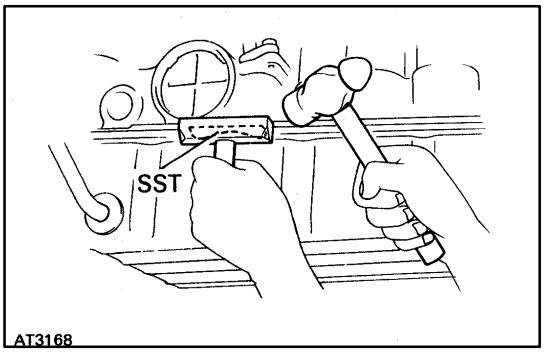

(b) Install the blade of SST between the transmission case and oil pan, cut off applied sealer.
SST 09032-00100

NOTICE: Be careful not to damage the oil pan flange.

(c) Remove the pan by lifting the transmission case.

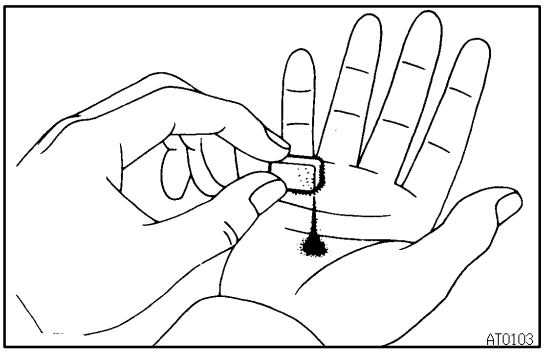

16. EXAMINE PARTICLES IN PAN

Remove the magnets and use them to collect steel particles.

Carefully look at the foreign matter and particles in the pan and on the magnets to anticipate the type of wear you will find in the transmission.

Steel (magnetic) ... bearing, gear and clutch plate wear
Brass (non-magnetic) ... bushing wear

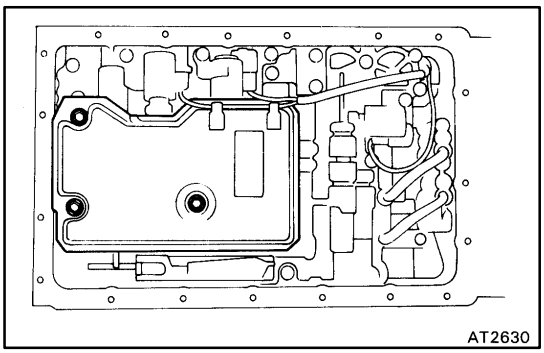

17. REMOVE OIL STRAINER AND GASKETS

(a) Remove the 3 bolts holding the oil strainer to the valve body.

(b) Remove the oil strainer and 2 gaskets.

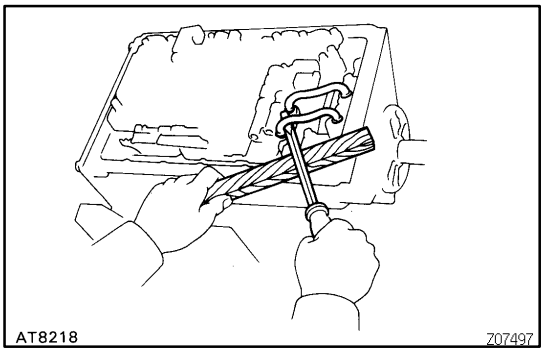

18. REMOVE OIL TUBES

Pry up both tube ends with a large screwdriver and remove the 2 oil tubes.

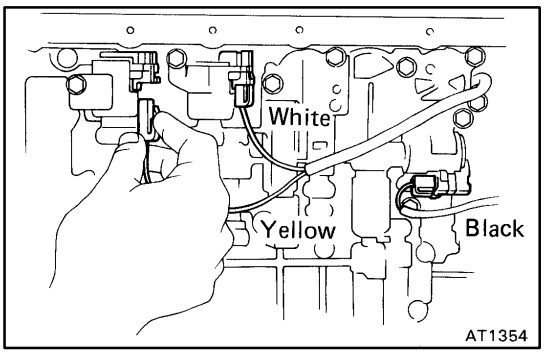

19. REMOVE SOLENOID WIRING

(a) Disconnect the 3 connectors from No.1, No.2 and lock-up solenoids.

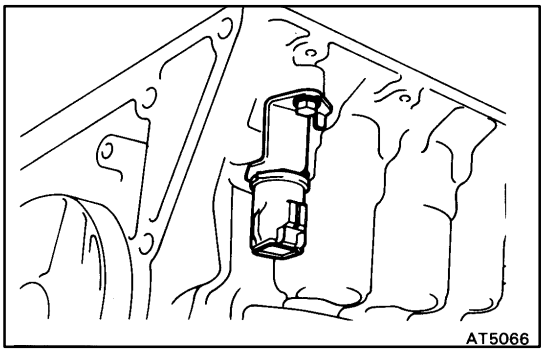

(b) Remove the bolt and stopper plate from the case.
(c) Pull out the solenoid wiring form the transmission case.
(d) Remove the O-rings from the grommet.

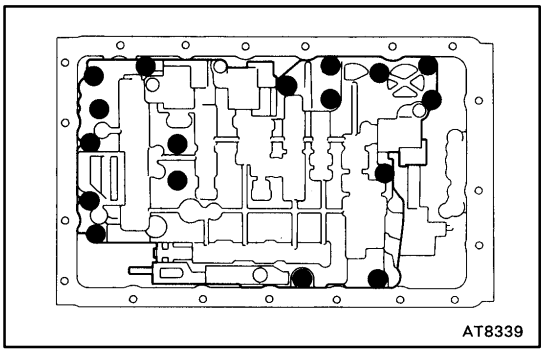

20. REMOVE VALVE BODY

(a) Remove the 17 bolts.

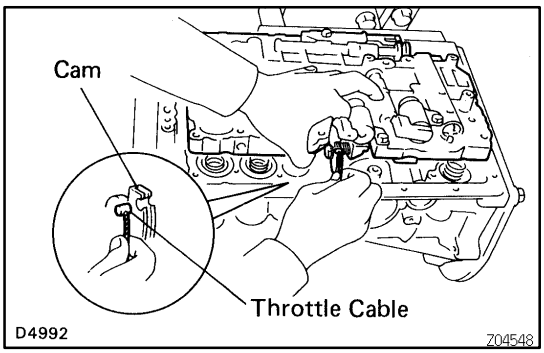

(b) Disconnect the throttle cable from the cam and remove the valve body.

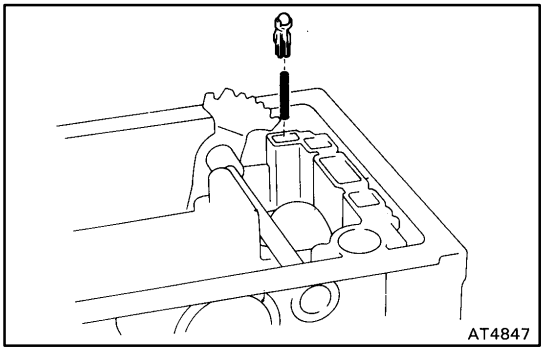

21. REMOVE CHECK BALL BODY, ACCUMULATOR SPRINGS AND PISTONS

(a) Remove the check ball body and spring.

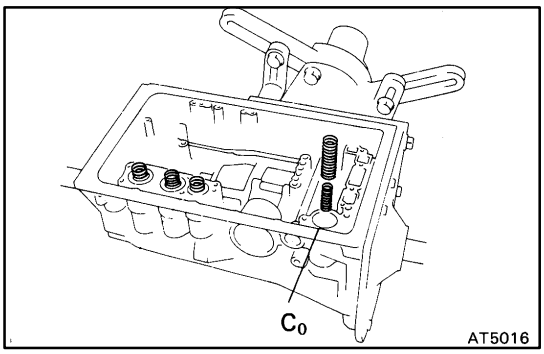

(b) Remove the 2 springs from C_0 accumulator piston.

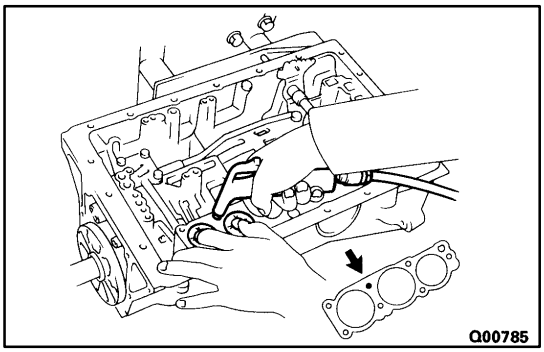

(c) Applying compressed air to the oil hole, remove the B_2 and C_2 accumulator pistons and springs.

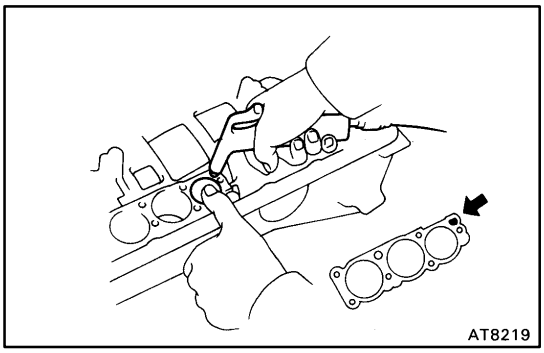

(d) Applying compressed air to the oil hole, remove the B_0 accumulator piston and spring.

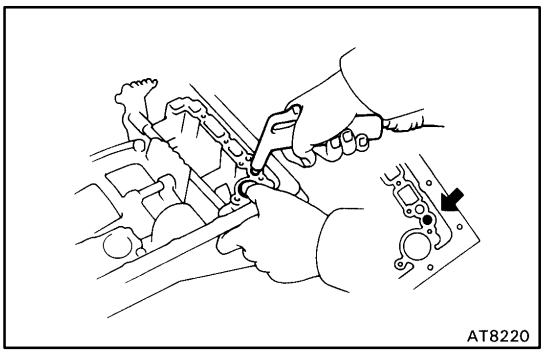

(e) Applying compressed air to the oil hole, remove the C_0 accumulator piston.
(f) Remove the O-ring from each piston.

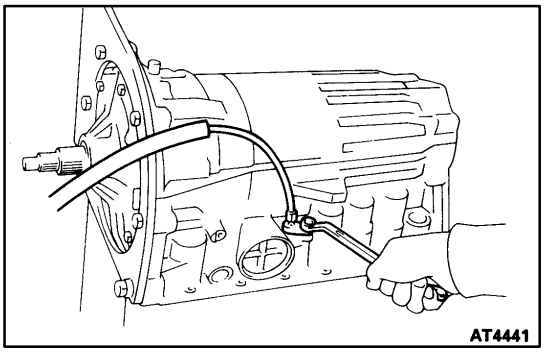

22. REMOVE THROTTLE CABLE

(a) Remove the retaining bolt and pull out the throttle cable.
(b) Remove the O-ring from the cable.

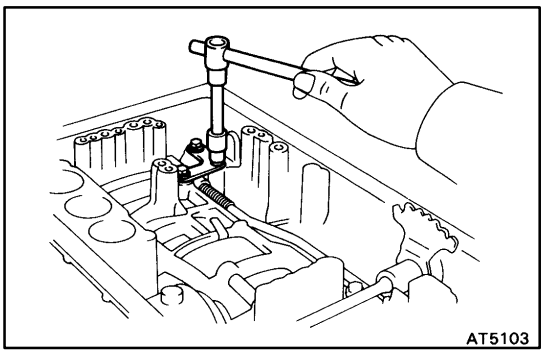

23. REMOVE PARKING LOCK ROD AND PAWL

(a) Remove the parking lock pawl bracket.

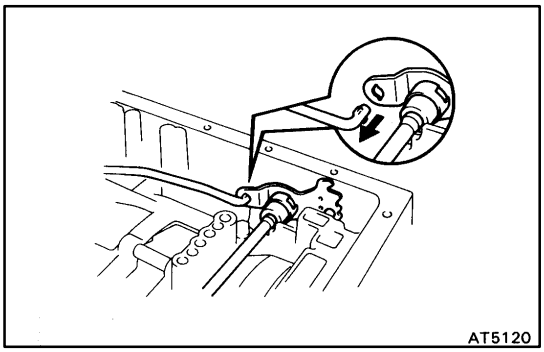

(b) Disconnect the parking lock rod from the manual valve lever.

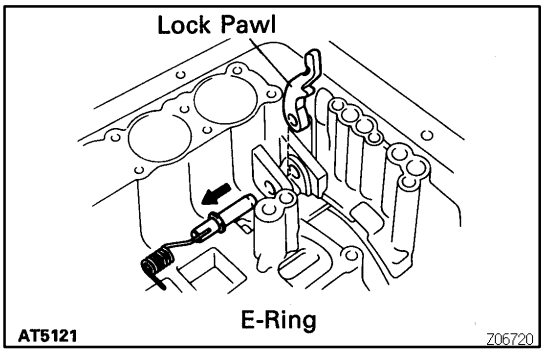

(d) Pull the parking lock pawl shaft out from the front side, then remove the lock pawl and spring.

(c) Remove the E-ring from the shaft.

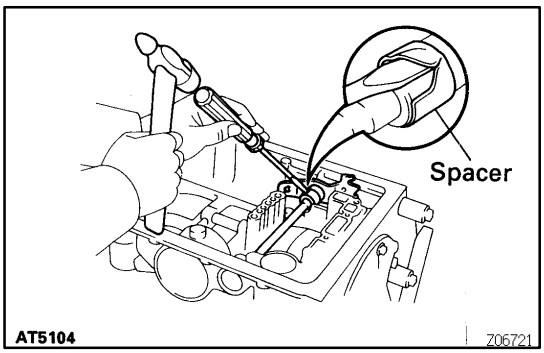

24. REMOVE MANUAL VALVE LEVER SHAFT AND OIL SEALS

(a) Using a hammer and chisel, cut off the spacer and remove it from the shaft.

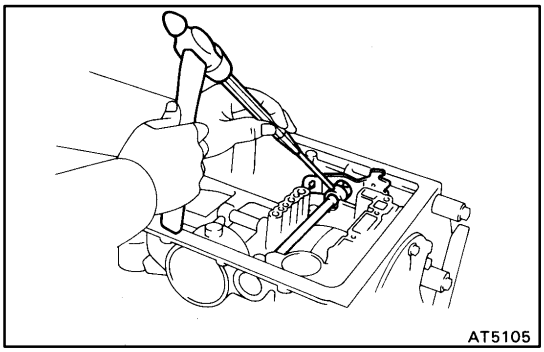

(b) Using a pin punch, drive out the pin.

(c) Pull the manual valve lever shaft out through the case and remove the manual valve lever.

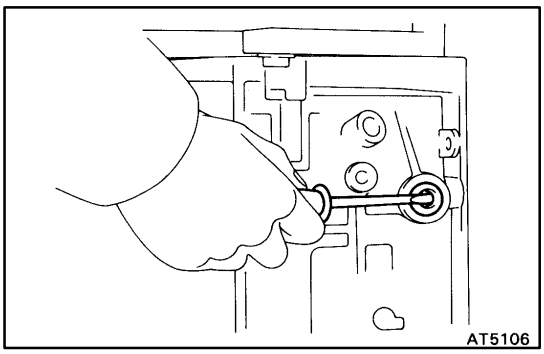

(d) Using a screwdriver, remove the 2 oil seals.

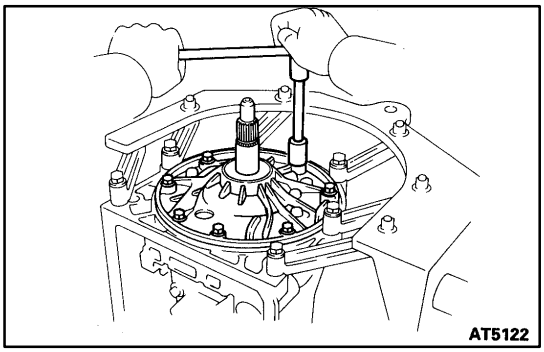

25. REMOVE OIL PUMP

(a) Stand up the transmission.

(b) Remove the 7 bolts holding the oil pump to the transmission case.

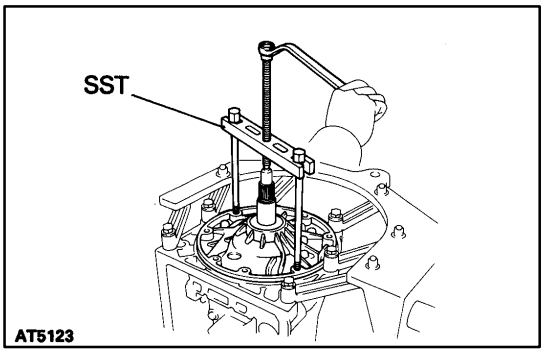

(c) Using SST, remove the oil pump.
SST 09610-20012

(d) Remove the O-ring from it.

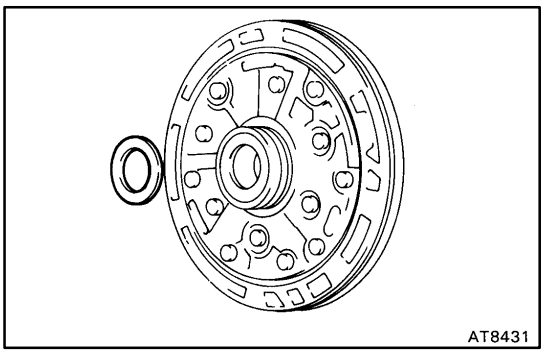

(e) Remove the race from the oil pump.

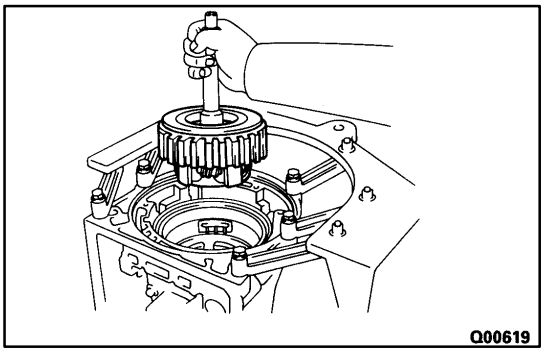

26. REMOVE OVERDRIVE PLANETARY GEAR WITH OVERDRIVE DIRECT CLUTCH AND ONE-WAY CLUTCH

(a) Remove the overdrive planetary gear with the overdrive direct clutch and overdrive one-way clutch from the transmission case.

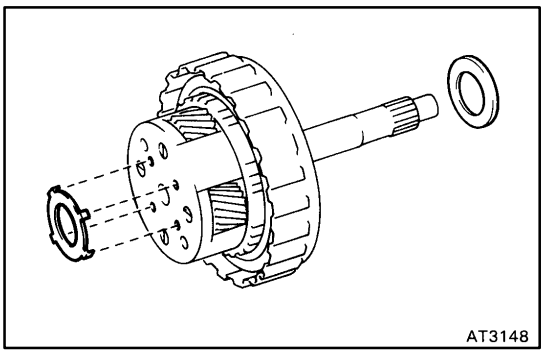

(b) Remove the race and assembled bearing and race.

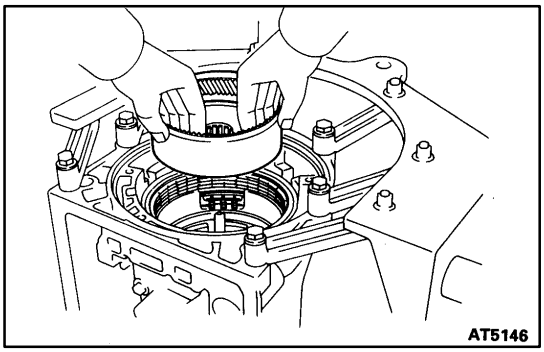

27. REMOVE OVERDRIVE PLANETARY RING GEAR

(a) Remove the overdrive planetary ring gear from the transmission case.

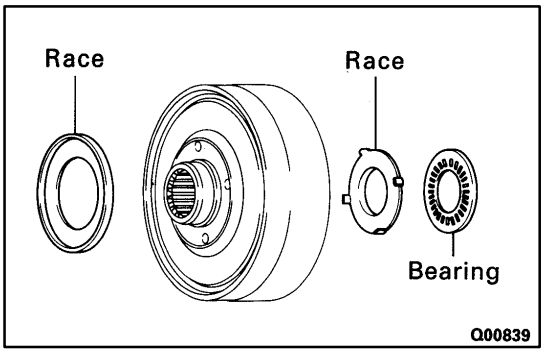

(b) Remove the bearing and 2 races from the planetary ring gear.

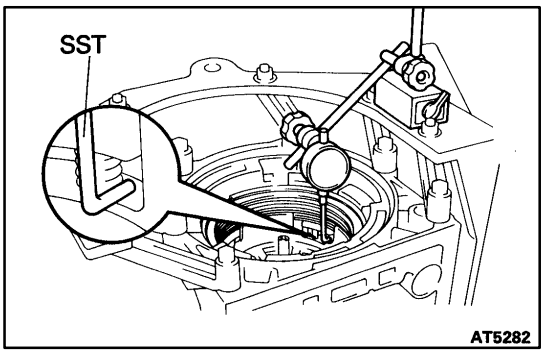

28. CHECK PISTON STROKE OF OVERDRIVE BRAKE

(a) Place SST and a dial indicator onto the overdrive brake piston.
SST 09350-30020 (09350-06120)

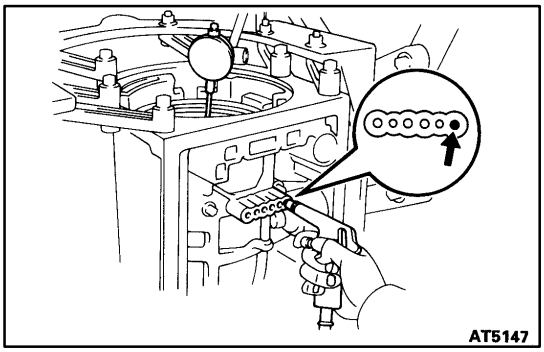

(b) Measure the stroke while applying and releasing compressed air (392-785 kPa, 4-8 kgf/cm^2, 57-114 psi).
Piston stroke:
PREVIA:
1.32-1.62 mm (0.0520-0.0638 in.)
OTHERS:
1.40-1.70 mm (0.0551-0.0669 in.)
If the values are non-standard, inspect the disc.

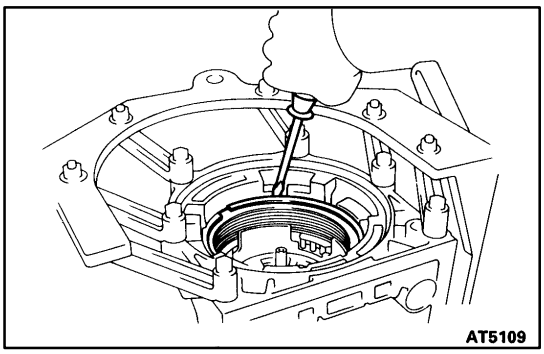

29. REMOVE FLANGES, PLATES AND DISCS OF OVER-DRIVE BRAKE

(a) Remove the snap ring.

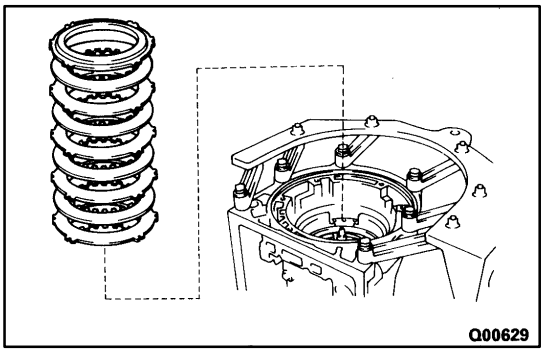

(b) Remove the flanges, plates and discs as a set.

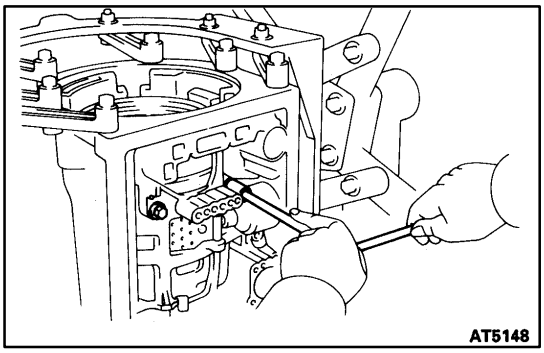

30. REMOVE OVERDRIVE SUPPORT ASSEMBLY

(a) Remove the 2 bolts holding the overdrive support assembly to the case.

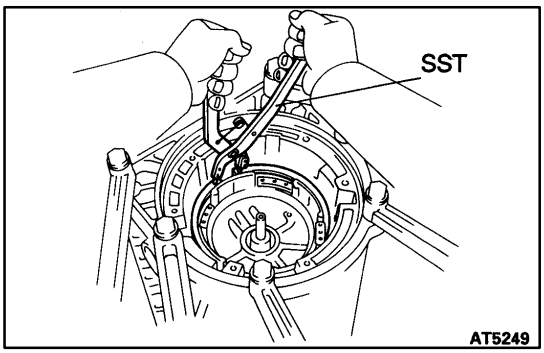

(b) Using SST, remove the snap ring.
SST 09350-30020 (09350-07060)

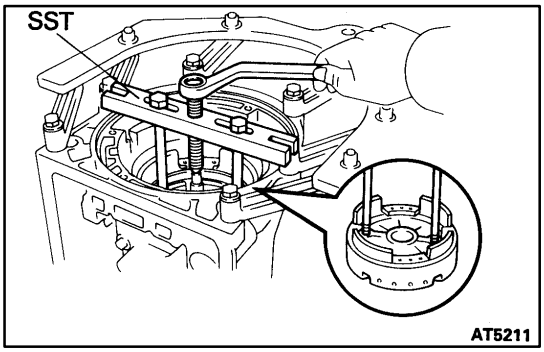

(c) Using SST, remove the overdrive support assembly.
SST 09350-30020 (09350-07020)

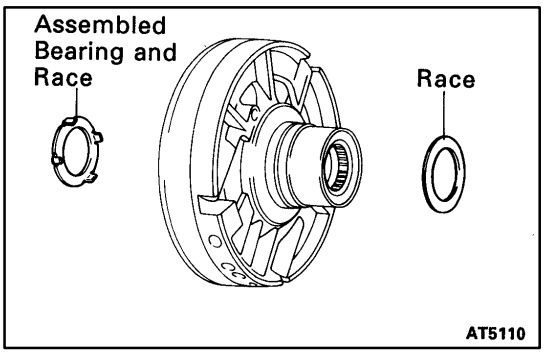

(d) Remove the assembled bearing and race from the overdrive support.

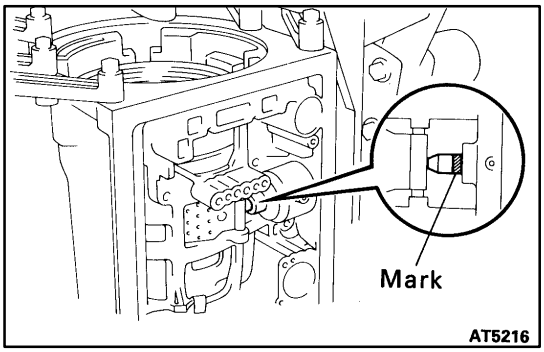

31. CHECK PISTON ROD STROKE OF SECOND COAST BRAKE

(a) Place a mark on the second coast brake piston rod.

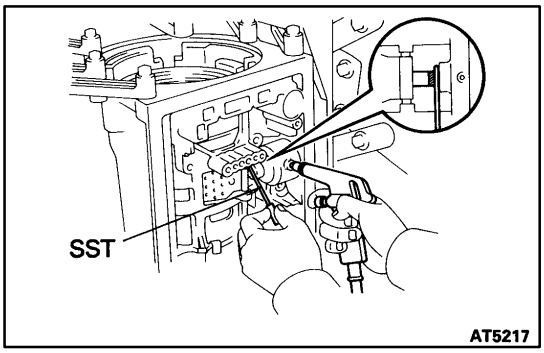

(b) Using SST, measure the stroke while applying and releasing compressed air (392-785 kPa, 4-8 kgf/cm^2, 57-114 psi).
SST 09240-00020
Piston stroke:
1.5-3.0 mm (0.059-0.118 in.)
If the values are non-standard, inspect the brake band.

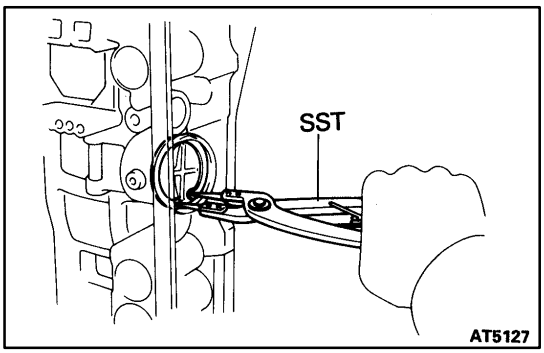

32. REMOVE SECOND COAST BRAKE COVER, PISTON ASSEMBLY AND SPRING

(a) Using SST, remove the snap ring.
SST 09350-30020 (09350-07060)

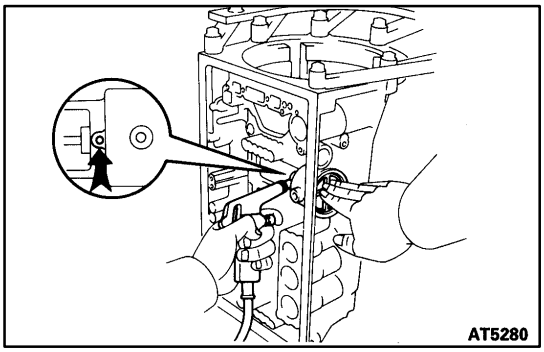

(b) Applying compressed air to the oil hole, remove the second coast brake cover, piston assembly and spring.

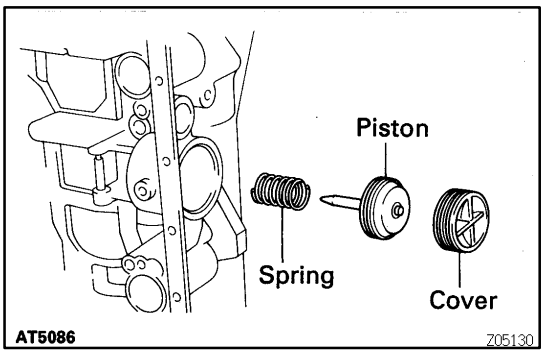

(c) Remove the 2 O-rings from the cover.

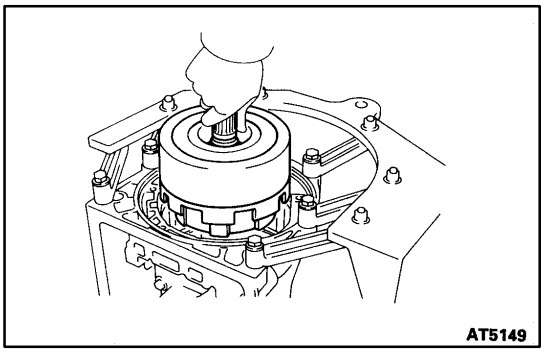

33. REMOVE DIRECT CLUTCH WITH FORWARD CLUTCH

(a) Remove the direct clutch with the forward clutch from the case.

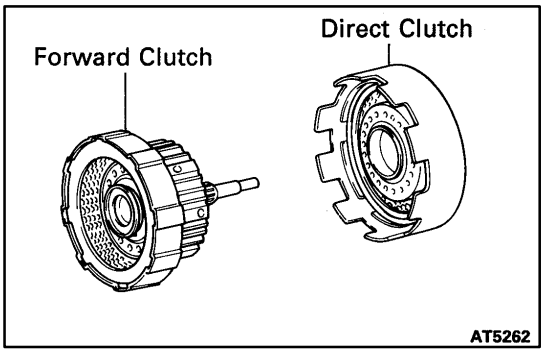

(b) Remove the direct clutch from the forward clutch.

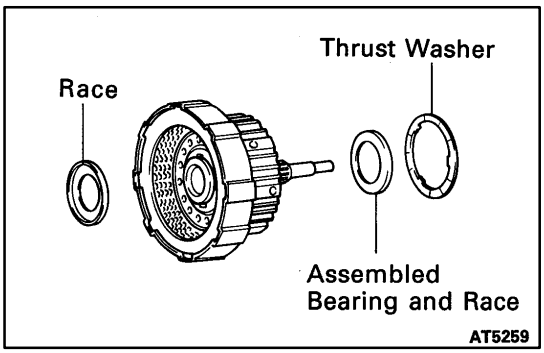

(c) Remove the assembled bearing and race, thrust washer and race from the forward clutch.

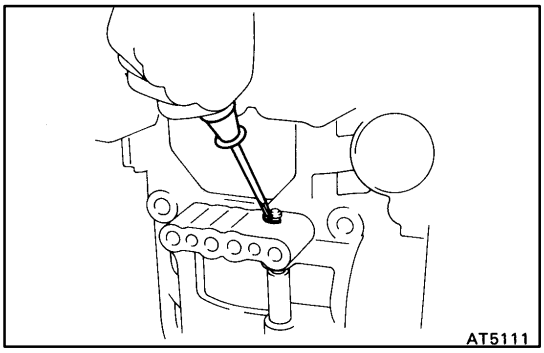

34. REMOVE SECOND COAST BRAKE BAND

(a) Remove the E-ring from the pin.

(b) Remove the pin from the brake band.

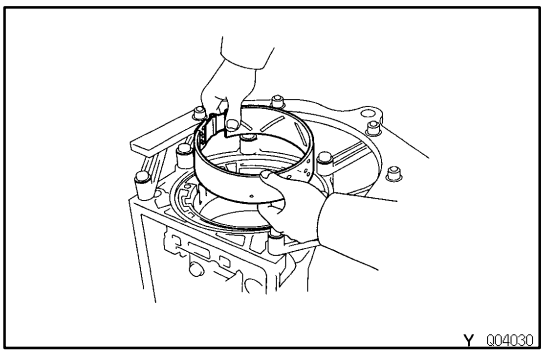

(c) Remove the second coast brake from the case.

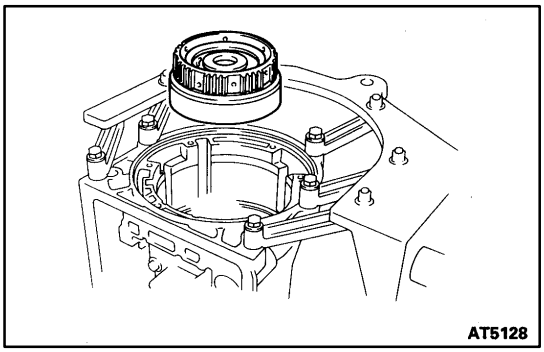

35. REMOVE FRONT PLANETARY GEAR UNIT

(a) Remove the front planetary ring gear from the case.

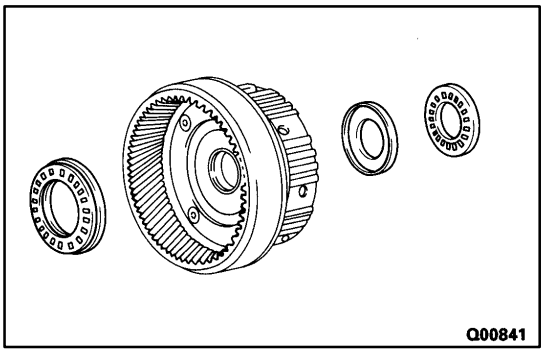

(b) Remove the bearing and race from the front planetary ring gear.

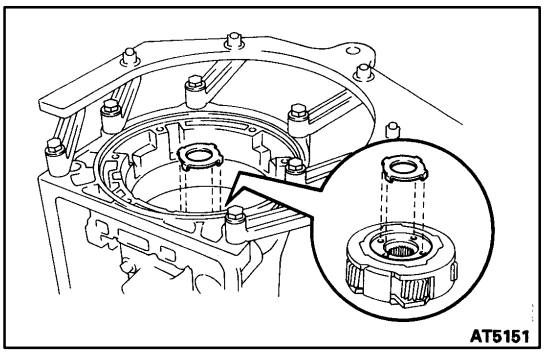

(c) Remove the race from the front planetary gear.

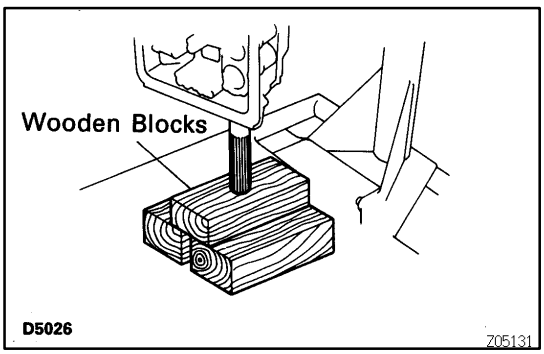

(d) With wooden blocks under the output shaft, stand the transmission on the output shaft.

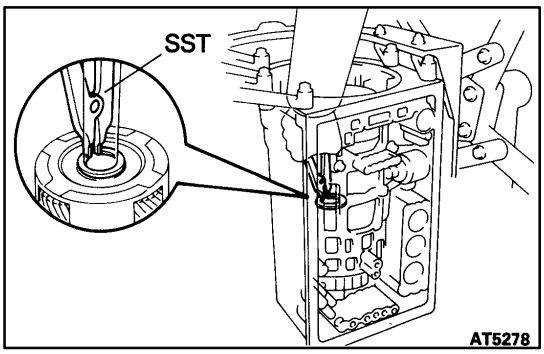

36. REMOVE FRONT PLANETARY GEAR

(a) Using SST, remove the snap ring.
SST 09350-30029 (09350-07070)
HINT: Pushing the output shaft towards the front makes it easier to remove.

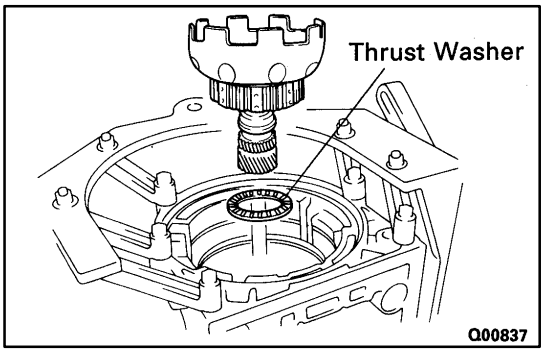

37. REMOVE PLANETARY SUN GEAR WITH NO.1 ONE-WAY CLUTCH

(a) Remove the planetary sun gear with No.1 one-way clutch from the case.

(b) Remove the thrust washer.

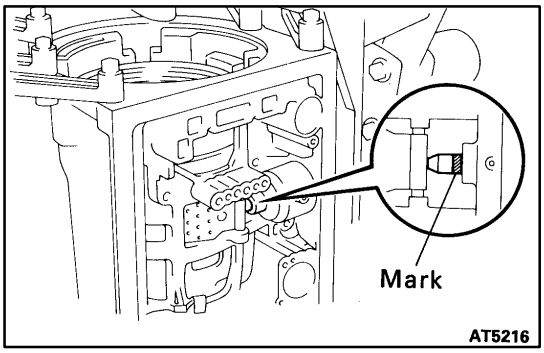

38. CHECK PACK CLEARANCE OF SECOND BRAKE

Using a feeler gauge, measure the clearance between the snap ring and flange.

Clearance:

0.62-1.98 mm (0.0244-0.0780 in.)

If the values are non-standard, inspect the discs.

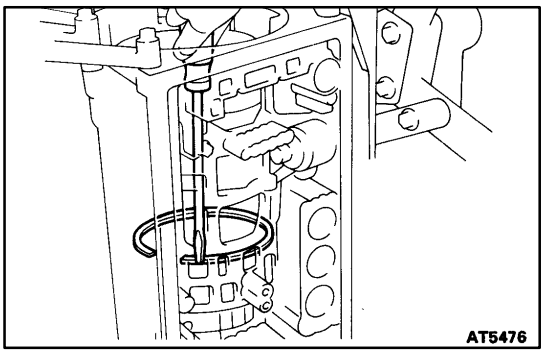

39. REMOVE FLANGE, PLATES AND DISCS OF SECOND BRAKE

(a) Remove the snap ring.

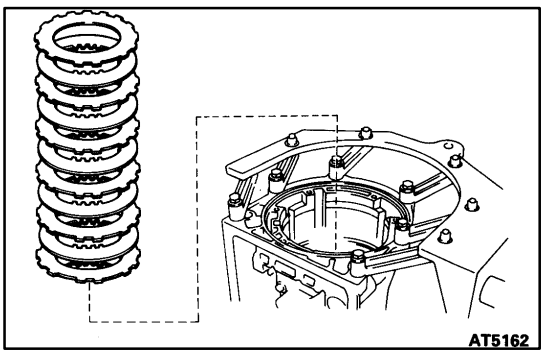

(b) Remove the flange, plates and discs.

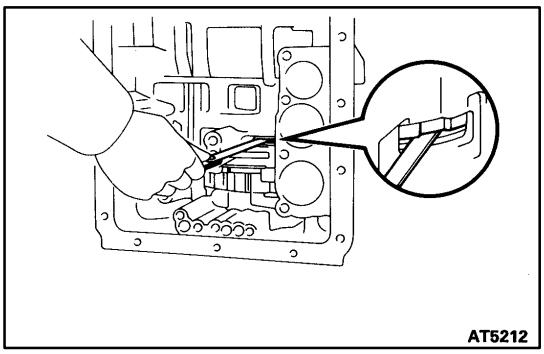

40. CHECK PACK CLEARANCE OF FIRST AND REVERSE BRAKE

Using a feeler gauge, measure the clearance between the plate and second brake drum.

Clearance:

0.60-1.12 mm (0.0236-0.0441 in.)

If the values are non-standard, inspect the discs.

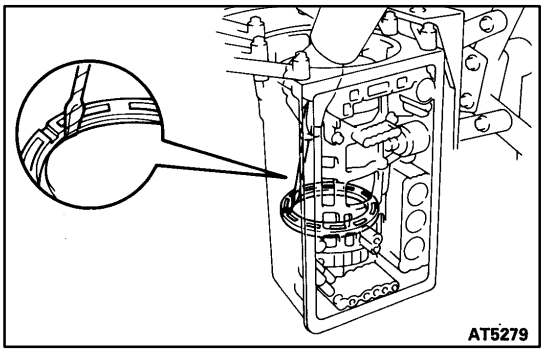

41. REMOVE SECOND BRAKE PISTON SLEEVE

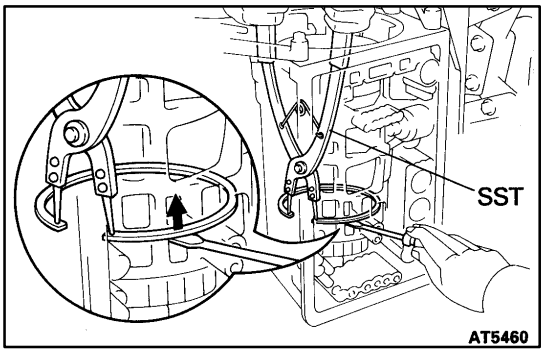

42. REMOVE REAR PLANETARY GEAR WITH SECOND BRAKE DRUM, FIRST AND REVERSE BRAKE PACK AND OUTPUT SHAFT

(a) Using SST and screwdriver, remove the snap ring.
SST 09350-30020 (09350-07060)

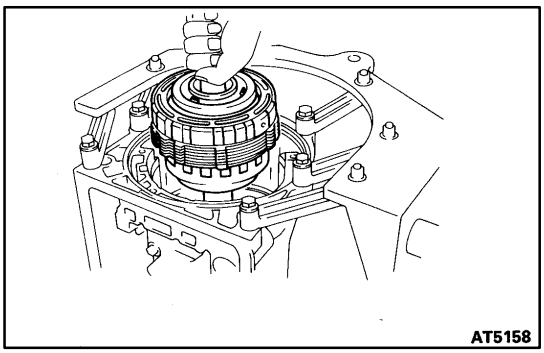

(b) Remove the rear planetary gear, second brake drum, first and reverse brake pack and output shaft as an assembly.

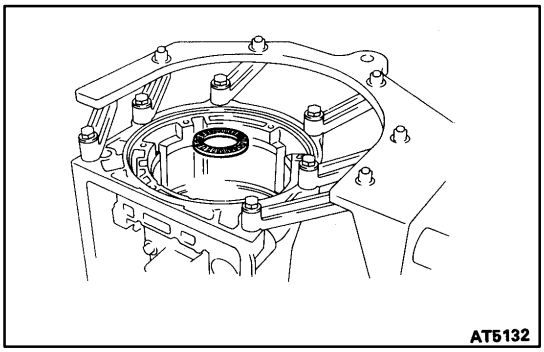

(c) Remove the assembled thrust bearing and race from the case.

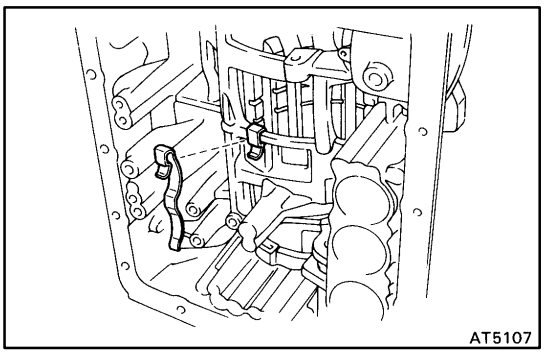

43. REMOVE LEAF SPRING

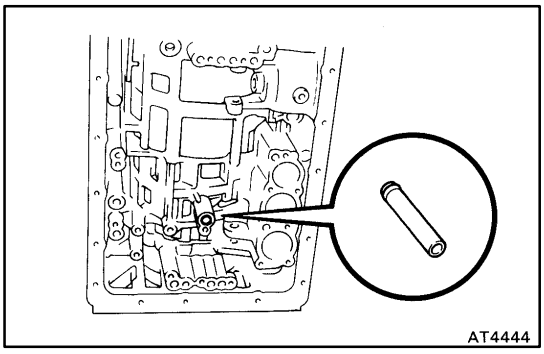

44. REMOVE BRAKE DRUM GASKET

COMPONENT PARTS

AX0AF-0D

General Notes

The instructions here are organized so that you work on only one component group at a time.

This will help avoid confusion from similar-looking parts of different subassemblies being on your workbench at the same time.

The component groups are inspected and repaired from the converter housing side.

As much as possible, complete the inspection, repair and assembly before proceeding to the next component group. If a component group cannot be assembled because parts are being ordered, be sure to keep all parts of that group in a separate container while proceeding with disassembly, inspection, repair and assembly of other component groups.

Recommended ATF:

DEXRON® II

GENERAL CLEANING NOTES:

1. All disassembled parts should be washed clean and any fluid passages and holes blown through with compressed air.
2. When using compressed air to dry parts, always aim away from yourself to prevent accidentally spraying automatic transmission fluid or kerosene in your face.
3. The recommended automatic transmission fluid or kerosene should be used for cleaning.

PARTS ARRANGEMENT:

1. After cleaning, the parts should be arranged in the correct order to allow efficient inspection, repairs, and reassembly.
2. When disassembling a valve body, be sure to keep each valve together with the corresponding spring.
3. New discs for the brakes and clutches that are to be used for replacement must be soaked in transmission fluid for at least 15 minutes before assembly.

GENERAL ASSEMBLY:

1. All oil seal rings, clutch discs, clutch plates, rotating parts, and sliding surfaces should be coated with transmission fluid prior to reassembly.
2. All gaskets and rubber O-rings should be replaced.
3. Make sure that the ends of a snap ring are not aligned with one of the cutouts and are installed in the groove correctly.
4. If a worn bushing is to be replaced, the subassembly containing that bushing must be replaced.
5. Check thrust bearings and races for wear or damage. Replace if necessary.
6. Use petroleum jelly to keep parts in place.

OIL PUMP

COMPONENTS

AX0AL-0A

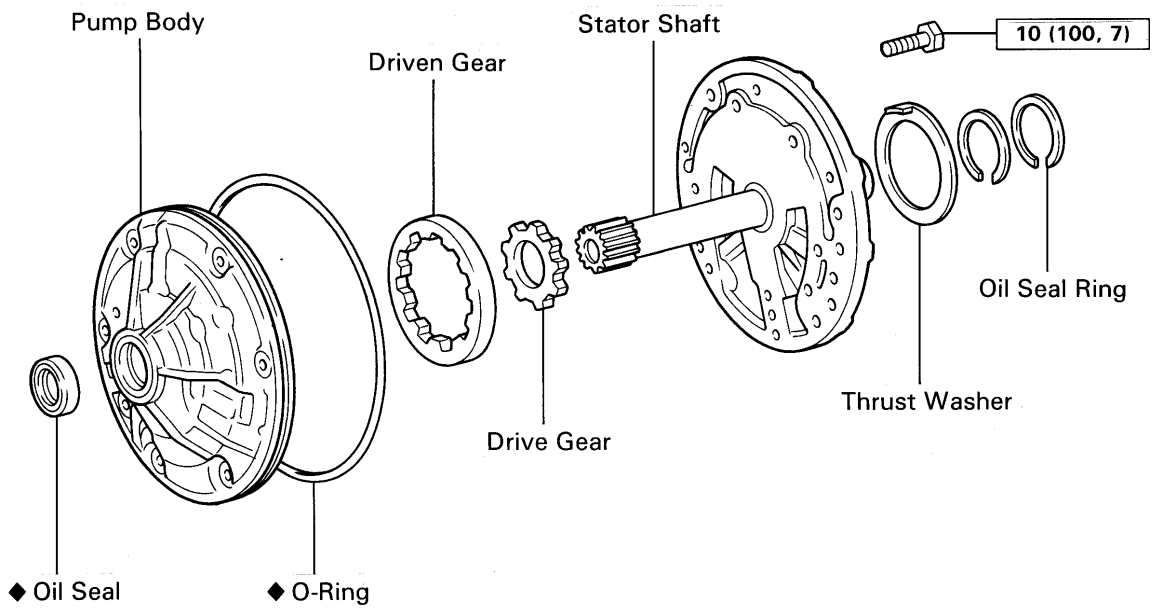

N·m (kgf·cm, ft·lbf) : Specified torque
◆ Non-reusable part

AT8669

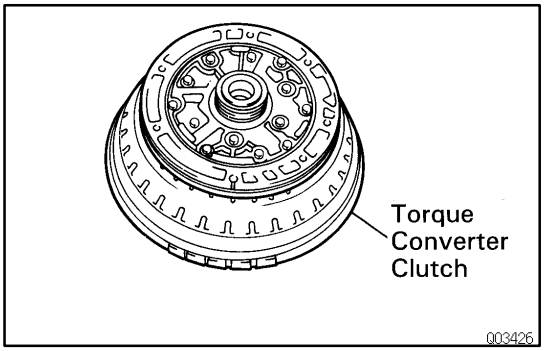

Q03426

AT0FV-02

OIL PUMP DISASSEMBLY

1. USE TORQUE CONVERTER CLUTCH AS WORK STAND

Place the oil pump body on the torque converter clutch.

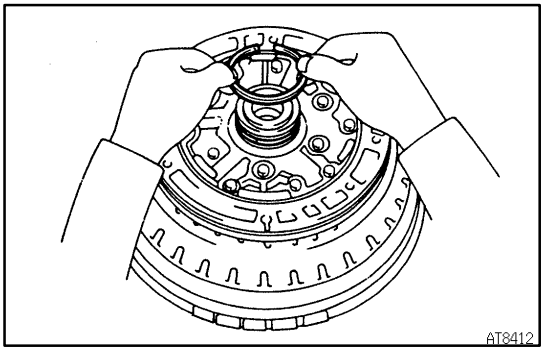

AT8412

2. REMOVE OIL SEAL RINGS

Remove the 2 oil seal rings from the stator shaft back side.

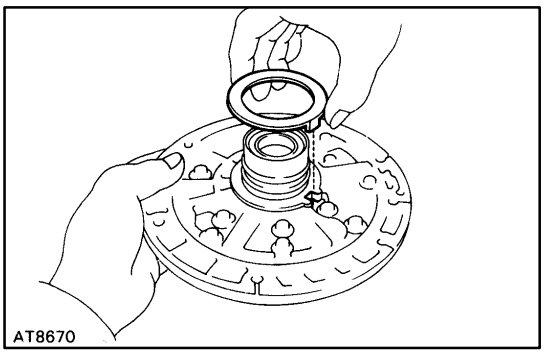

3. REMOVE THRUST WASHER FROM STATOR SHAFT BACK SIDE

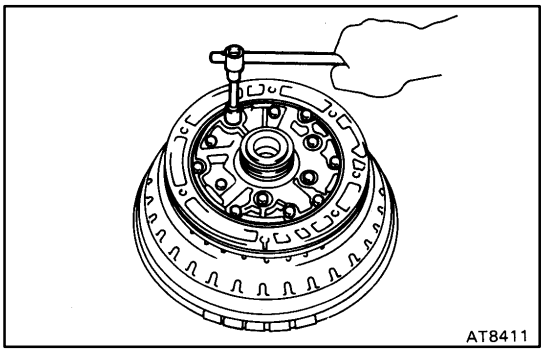

4. REMOVE STATOR SHAFT

(a) Remove the 13 bolts, and then remove the stator shaft from the oil pump body.

(b) Remove the oil pump body from the torque converter clutch.

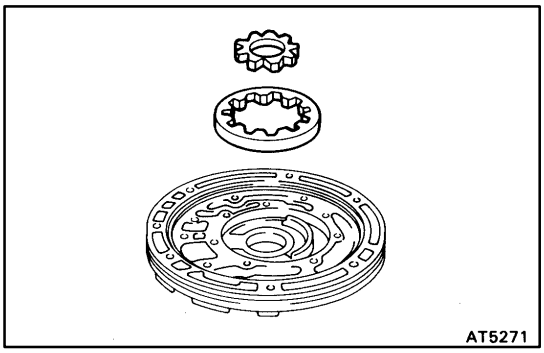

5. REMOVE OIL PUMP DRIVE GEAR AND DRIVEN GEAR

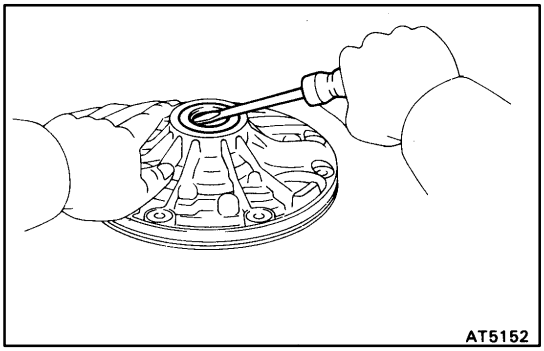

6. REMOVE OIL SEAL

Pry off the oil seal with a screwdriver.

AX0AN-0C

OIL PUMP INSPECTION

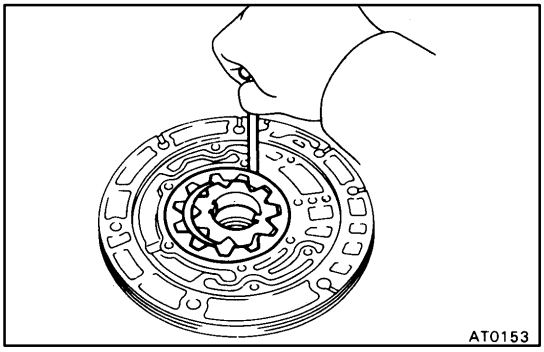

1. CHECK BODY CLEARANCE OF DRIVEN GEAR

Push the driven gear to one side of the body.

Using a feeler gauge, measure the clearance.

Standard body clearance:

0.07-0.15 mm (0.0028-0.0059 in.)

Maximum body clearance:

0.3 mm (0.012 in.)

If the body clearance is greater than the maximum, replace the drive gear, driven gear or pump body.

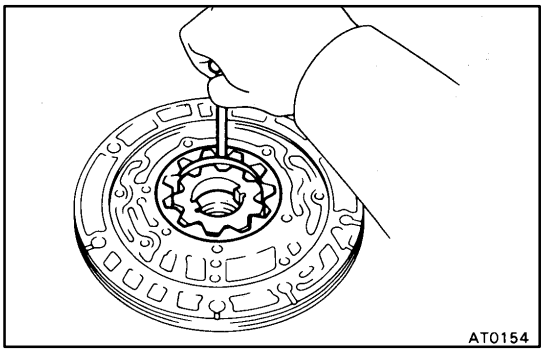

2. CHECK TIP CLEARANCE OF DRIVEN GEAR

Measure between the driven gear teeth and the crescent-shaped part of the pump body.

Standard tip clearance:

0.11-0.14 mm (0.0043-0.0055 in.)

Maximum tip clearance:

0.3 mm (0.012 in.)

If the tip clearance is greater than the maximum, replace the drive gear, driven gear or pump body.

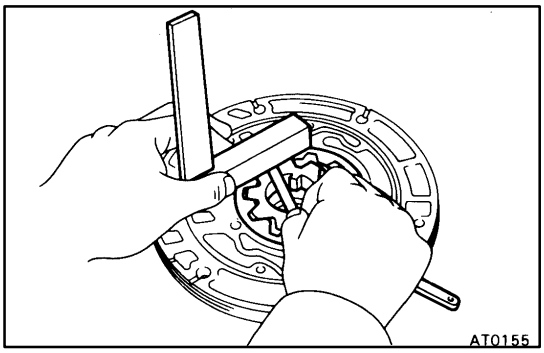

3. CHECK SIDE CLEARANCE OF BOTH GEARS

Using a steel straight edge and a feeler gauge, measure the side clearance of both gears.

Standard side clearance:

0.02-0.05 mm (0.0008-0.0020 in.)

Maximum side clearance:

0.1 mm (0.004 in.)

If the side clearance is greater than the maximum, select and replace the gears as a set.

Drive gear and driven gear thicknesses

mm (in.)

Mark	Thickness
1	9.440-9.449 (0.3717-0.3720)
2	9.450-9.459 (0.3720-0.3724)
3	9.460-9.470 (0.3724-0.3728)
4	9.471-9.480 (0.3720-0.3724)
5	9.481-9.490 (0.3729-0.3736)

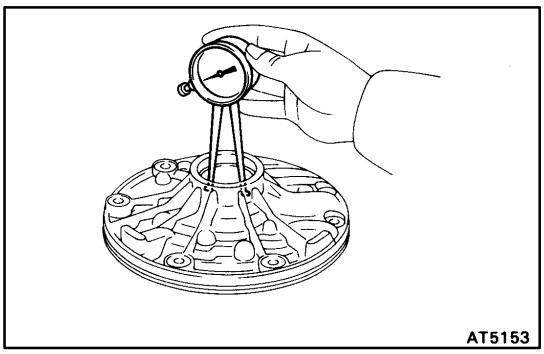

4. CHECK OIL PUMP BODY BUSHING

Using a dial indicator, measure the inside diameter of the oil pump body bushing.

Maximum inside diameter:

38.19 mm (1.5035 in.)

If the inside diameter is greater than the maximum, replace the oil pump body.

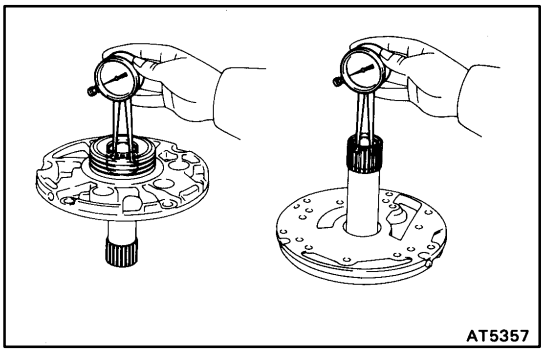

5. CHECK STATOR SHAFT BUSHINGS

Using a dial indicator, measure the inside diameter of the stator shaft bushing.

Maximum inside diameter:

Front side 21.58 mm (0.8496 in.)

Rear side 27.08 mm (1.0661 in.)

If the inside diameter is greater than the maximum, replace the stator shaft.

AX0AP-0C

OIL PUMP ASSEMBLY

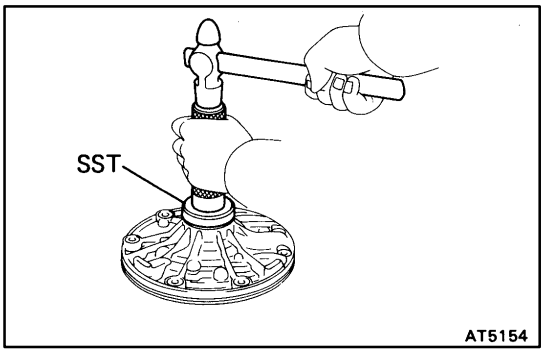

1. INSTALL FRONT OIL SEAL

(a) Using SST and a hammer, install a new oil seal. The seal end should be flush with the outer edge of the pump body.
SST 09350-30020 (09351-32140)

(b) Coat the oil seal lip with MP grease.

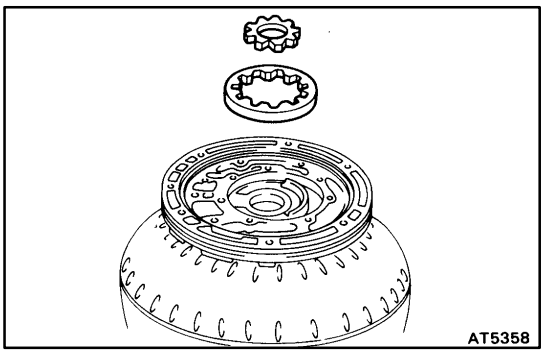

2. INSTALL DRIVEN GEAR AND DRIVE GEAR TO OIL PUMP BODY

(a) Place the oil pump body on the torque converter clutch.

(b) Coat the driven gear and drive gear with ATF.

(c) Install the driven gear and drive gear.

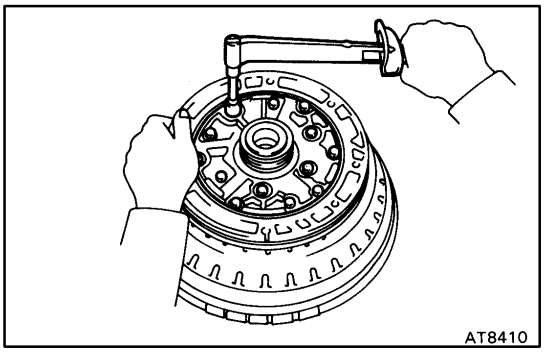

3. INSTALL STATOR SHAFT TO PUMP BODY

(a) Align the stator shaft with each bolt hole.

(b) Tighten the 13 bolts.

Torque: 10 N·m (100 kgf·cm, 7 ft·lbf)

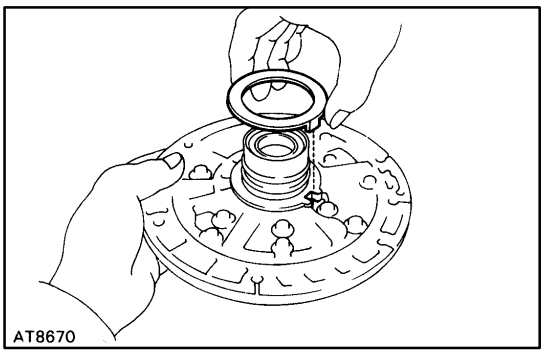

4. INSTALL THRUST WASHER

(a) Coat the thrust washer with petroleum jelly.

(b) Align the tab of the washer with the hollow of the pump body.

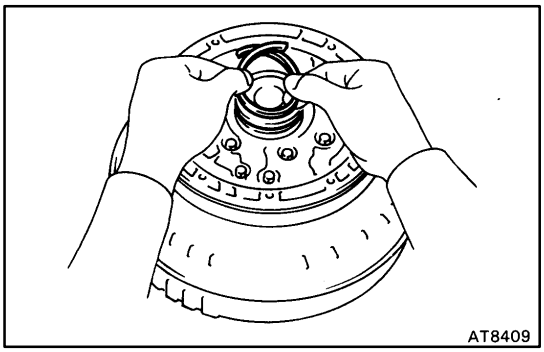

5. INSTALL OIL SEAL RINGS

(a) Coat the 2 oil seal rings with ATF.

(b) Install the 2 oil seal rings to the stator shaft groove, then snug them down by squeezing their ends together.

NOTICE: Do not spread the ring ends too much.

HINT: After installing the oil seal rings, check that they rotate smoothly.

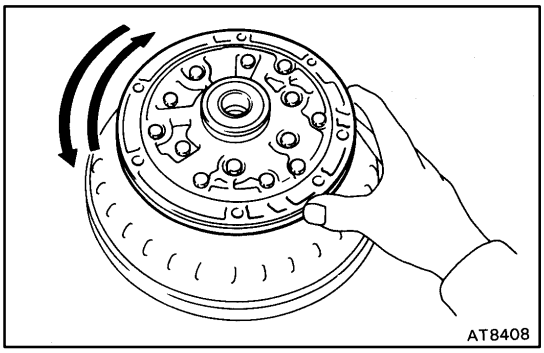

6. CHECK OIL PUMP DRIVE GEAR ROTATION

Make sure the drive gear rotates smoothly.

OVERDRIVE DIRECT CLUTCH

AT05B-04

COMPONENTS

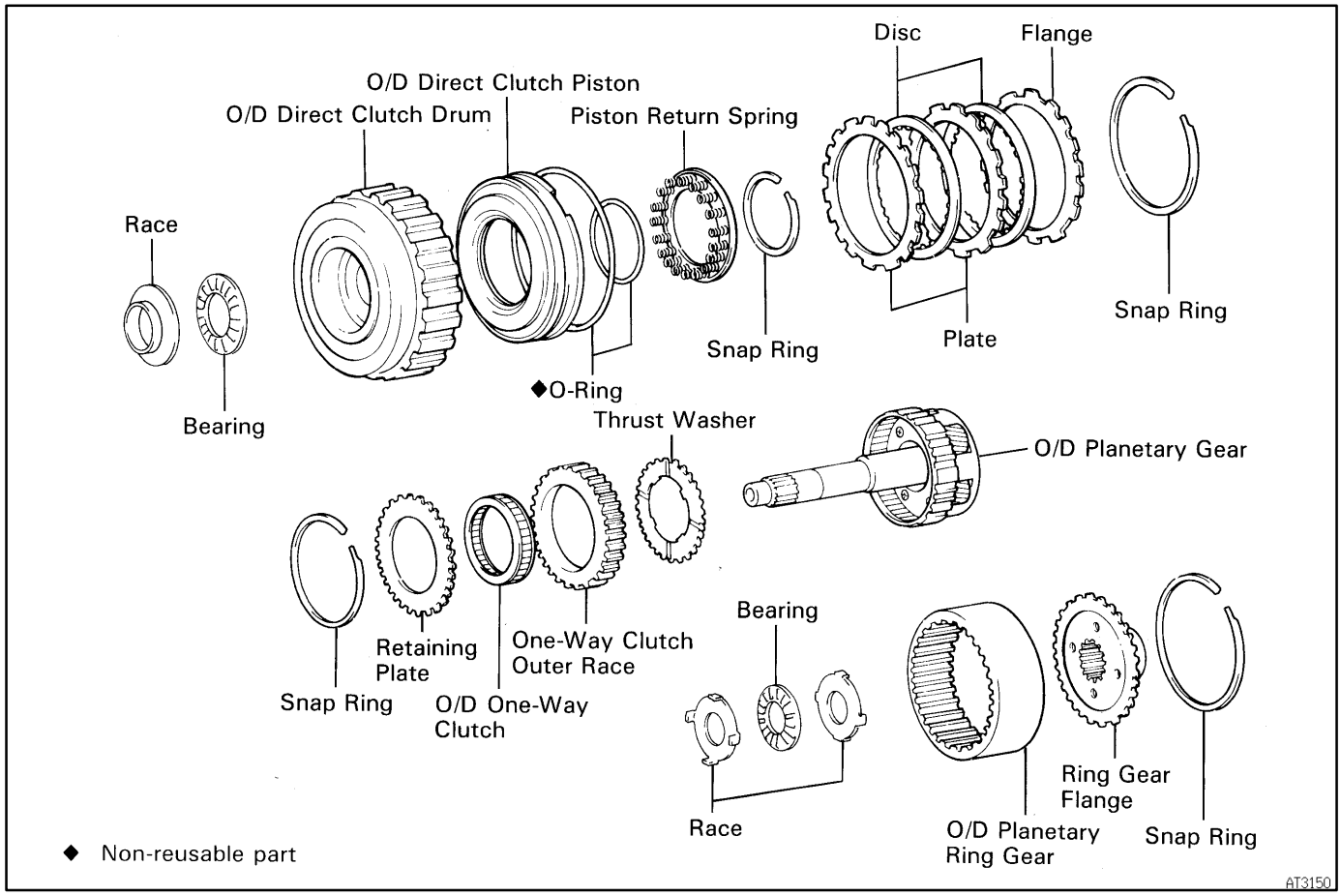

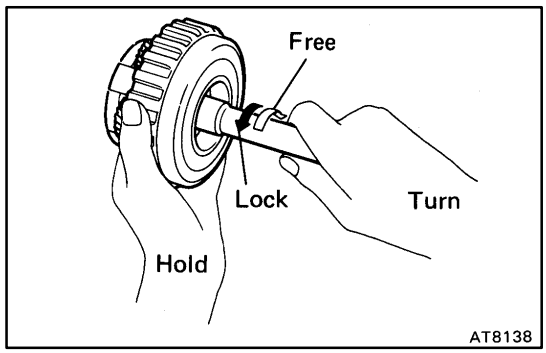

AT05C-08

OVERDRIVE PLANETARY GEAR, OVERDRIVE DIRECT CLUTCH AND OVERDRIVE ONE-WAY CLUTCH DISASSEMBLY

1. CHECK OPERATION OF ONE-WAY CLUTCH

Hold the O/D direct clutch drum and turn the input shaft. Check that the input shaft must be able to turn freely clockwise and locks counterclockwise.

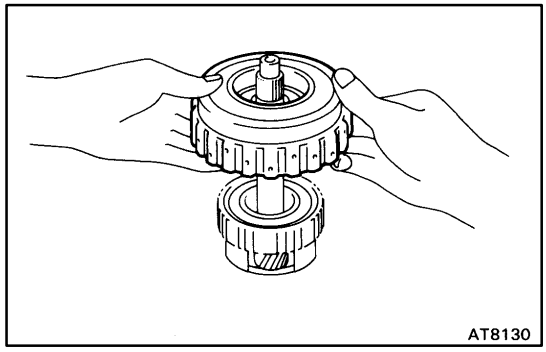

2. REMOVE OVERDRIVE DIRECT CLUTCH ASSEMBLY FROM OVERDRIVE PLANETARY GEAR

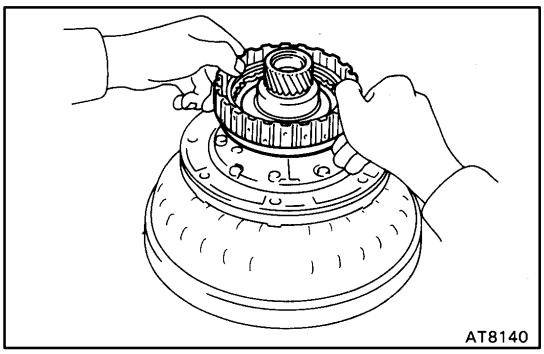

3. CHECK PISTON STROKE OF OVERDRIVE DIRECT CLUTCH

(a) Place the oil pump onto the torque converter clutch, and then place the O/D direct clutch assembly onto the oil pump.

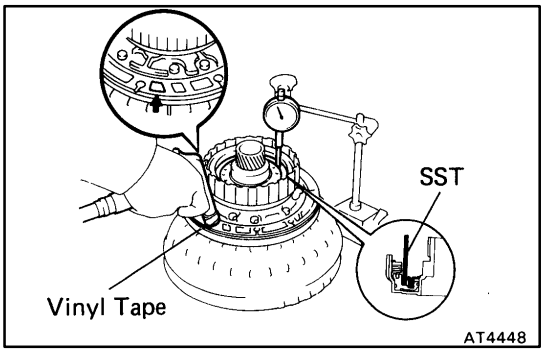

(b) Using SST and a dial indicator, measure the O/D direct clutch piston stroke while applying and releasing compressed air (392-785 kPa, 4-8 kgf/cm^2, 57-114 psi).
SST 09350-30020 (09350-06120)
Piston stroke:
SUPRA:
1.45-1.70 mm (0.0571-0.0669 in.)
OTHERS:
1.85-2.15 mm (0.0728-0.0846 in.)
If the values are non-standard, inspect the discs.

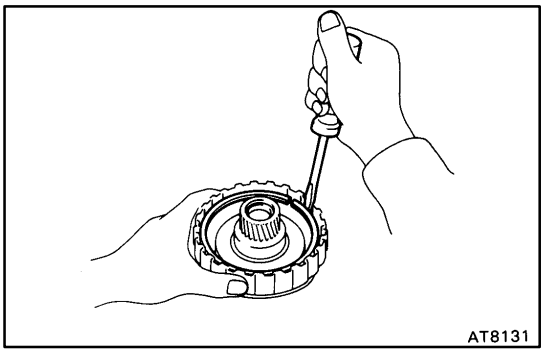

4. REMOVE FLANGE, PLATES AND DISCS

(a) Using a screwdriver, remove the snap ring from the O/D direct clutch drum.
(b) Remove the flange, plates and discs.

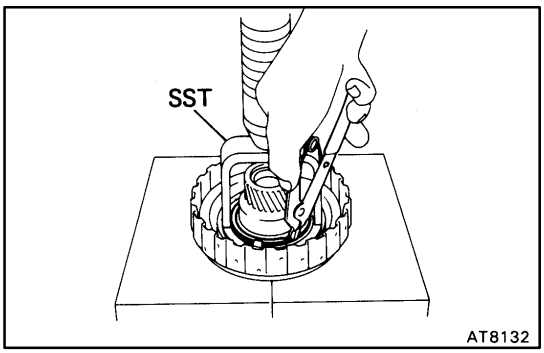

5. REMOVE PISTON RETURN SPRING

(a) Place SST on the spring retainer and compress the return spring with a shop press.
SST 09350-30020 (09350-07040)
(b) Using snap ring pliers, remove the snap ring.
(c) Remove the piston return spring.

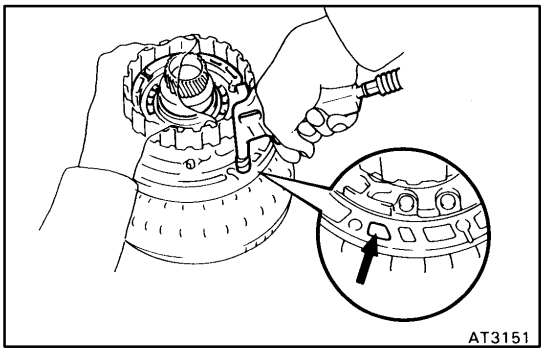

6. REMOVE OVERDRIVE DIRECT CLUTCH PISTON

(a) Place the oil pump onto the torque converter clutch and then place the O/D direct clutch onto the oil pump.
(b) Hold the O/D direct clutch piston with hand, apply compressed air to the oil pump to remove the O/D direct clutch piston.
(c) Remove the O/D direct clutch piston.
(d) Remove the 2 O-rings from the piston.

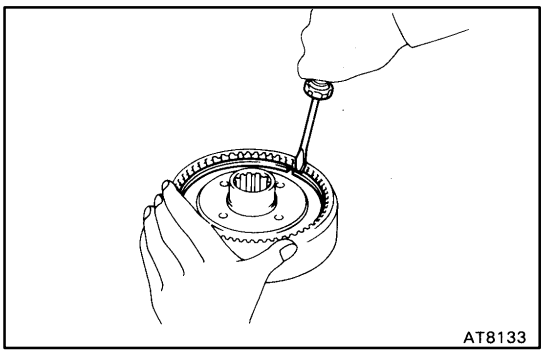

7. REMOVE RING GEAR FLANGE

(a) Using a screwdriver, remove the snap ring.

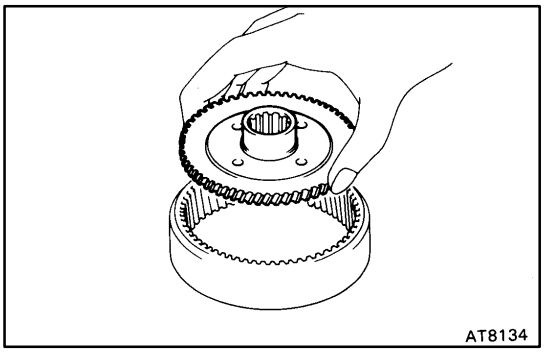

(b) Remove the ring gear flange.

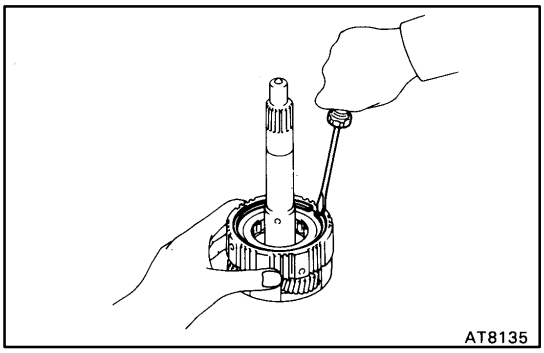

8. REMOVE RETAINING PLATE

(a) Using a screwdriver, remove the snap ring.

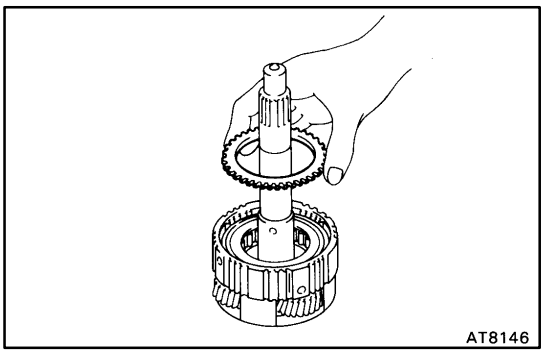

(b) Remove the retaining plate.

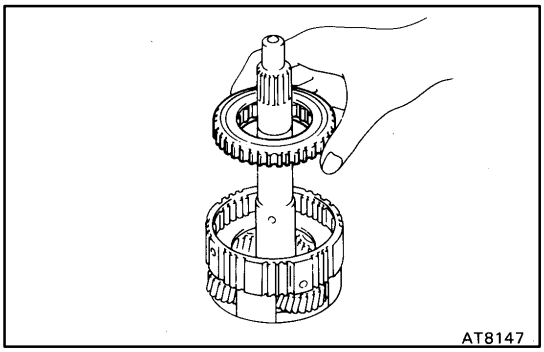

9. REMOVE OVERDRIVE ONE- WAY CLUTCH WITH OUTER RACE

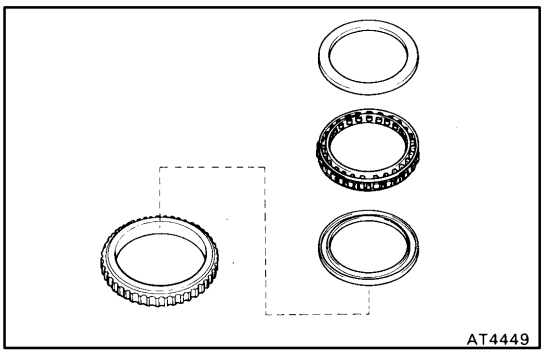

10. REMOVE ONE-WAY CLUTCH FROM OUTER RACE

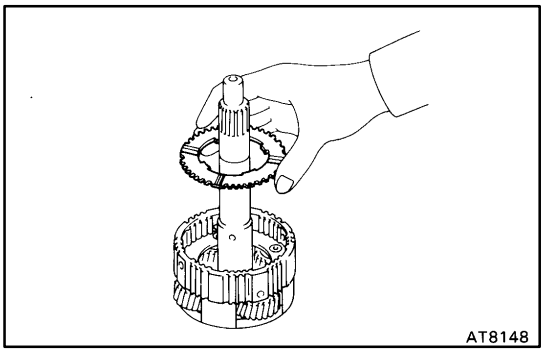

11. REMOVE THRUST WASHER

AT05D-06

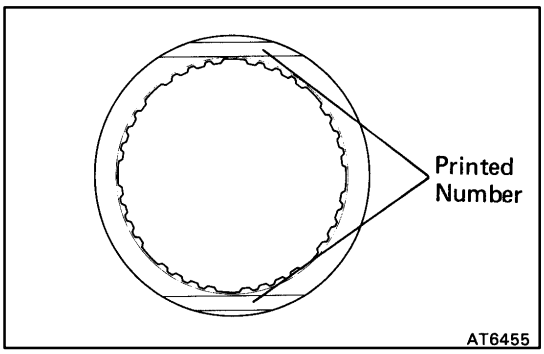

OVERDRIVE PLANETARY GEAR AND OVERDRIVE DIRECT CLUTCH INSPECTION

1. INSPECT DISC, PLATE AND FLANGE

Check to see if the sliding surface of the disc, plate and flange are worn or burnt. If necessary, replace them.

HINT:

★ If the lining of the disc is peeling off or discolored, or even if a part of the printed numbers are defaced, replace discs.

★ Before assembling new discs, soak them in ATF for at least 15 minutes.

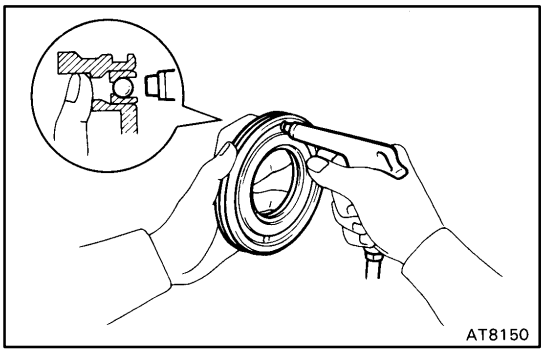

2. CHECK OVERDRIVE DIRECT CLUTCH PISTON

(a) Check that the check ball is free by shaking the piston.

(b) Check that the valve does not leak by applying low-pressure compressed air.

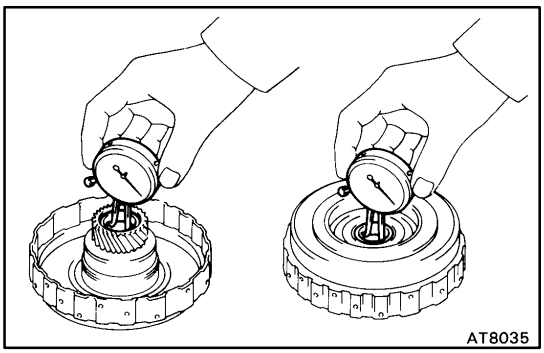

3. CHECK OVERDRIVE DIRECT CLUTCH DRUM BUSHINGS

Using a dial indicator, measure the inside diameter of the clutch drum bushings.

Maximum inside diameter:

27.11 mm (1.0673 in.)

If the inside diameter is greater than the maximum, replace the clutch drum.

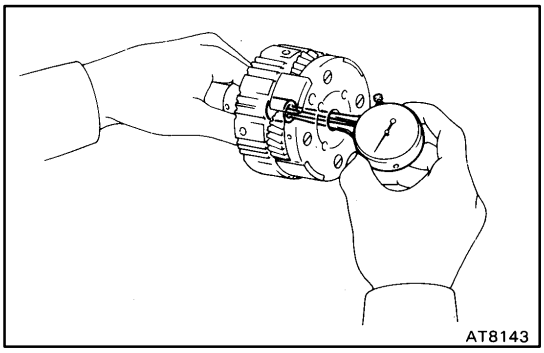

4. CHECK OVERDRIVE PLANETARY GEAR BUSHING

Using a dial indicator, measure the inside diameter of the planetary gear bushing.

Maximum inside diameter:

11.27 mm (0.4437 in.)

If the inside diameter is greater than the maximum, replace the planetary gear.

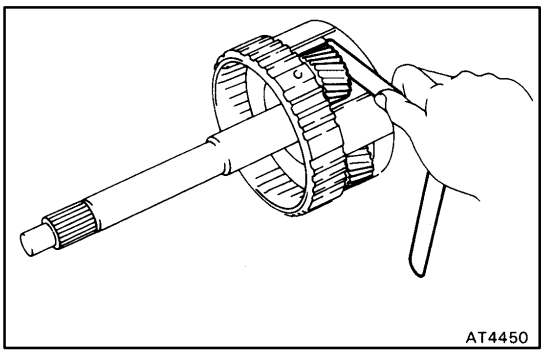

5. MEASURE PLANETARY PINION GEAR THRUST CLEARANCE

Using a feeler gauge, measure the planetary pinion gear thrust clearance.

Standard clearance:

0.20-0.60 mm (0.0079-0.0236 in.)

Maximum clearance:

1.00 mm (0.0394 in.)

If the clearance is greater than the maximum, replace the planetary gear assembly.

AT0FW-04

OVERDRIVE PLANETARY GEAR, OVERDRIVE DIRECT CLUTCH AND OVERDRIVE ONE-WAY CLUTCH ASSEMBLY

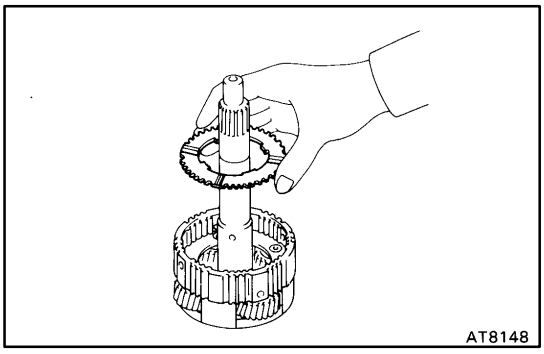

1. INSTALL THRUST WASHER TO OVERDRIVE PLANETARY GEAR

Install the thrust washer to the overdrive planetary gear, the groove side facing upward.

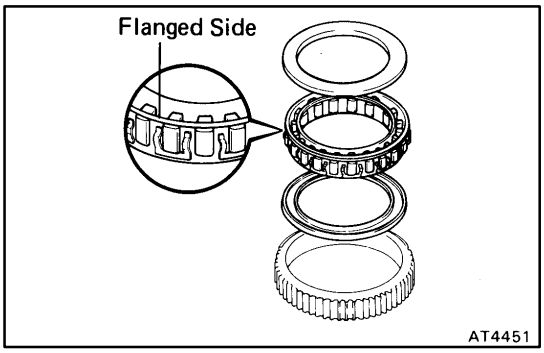

2. INSTALL OVERDRIVE ONE-WAY CLUTCH

(a) Install the one-way clutch into the outer race, the flange side of the one-way clutch facing upward.

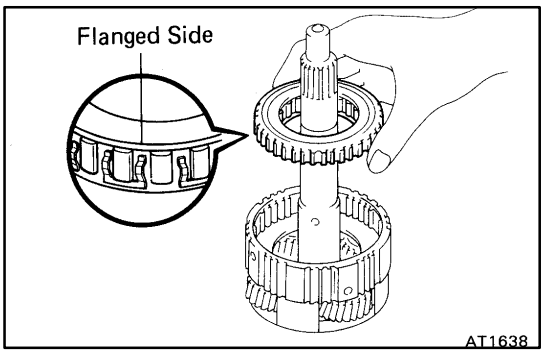

(b) Install the overdrive one-way clutch with the outer race to the overdrive planetary gear.

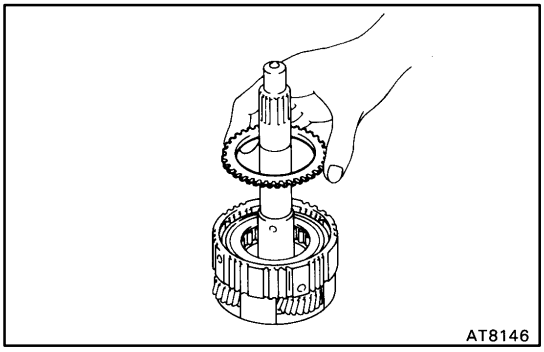

3. INSTALL RETAINING PLATE

(a) Install the retaining plate.

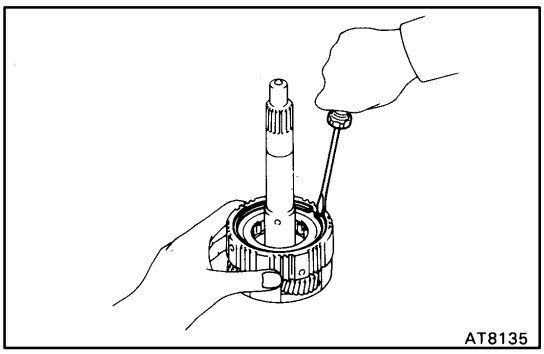

(b) Using a screwdriver, install the snap ring.

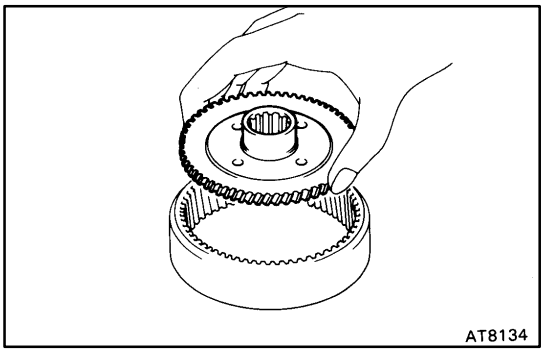

4. INSTALL RING GEAR FLANGE TO OVERDRIVE PLANETARY RING GEAR

(a) Install the ring gear flange.

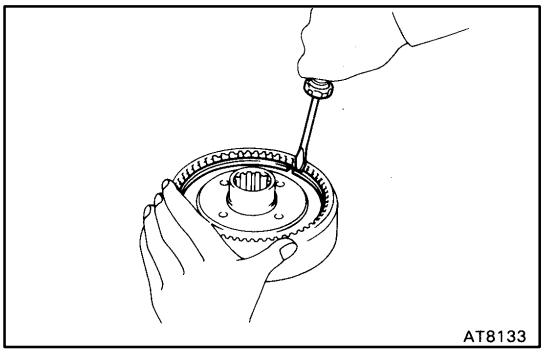

(b) Using a screwdriver, install the snap ring.

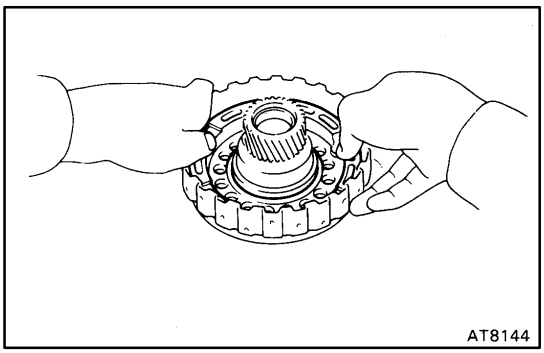

5. INSTALL OVERDRIVE DIRECT CLUTCH PISTON

(a) Coat the new O-rings with ATF and install them on the O/D direct clutch piston.

(b) Being careful not to damage the O-rings, press in the direct clutch piston into the clutch drum with both hands.

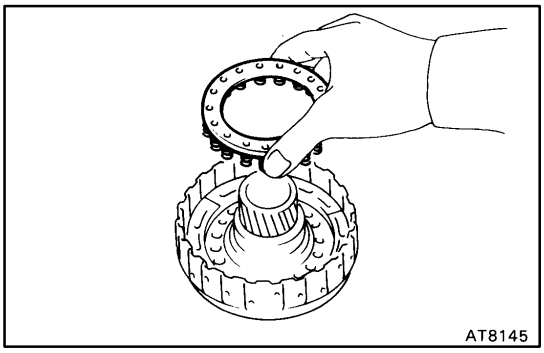

6. INSTALL PISTON RETURN SPRING

(a) Install the piston return spring to the piston.

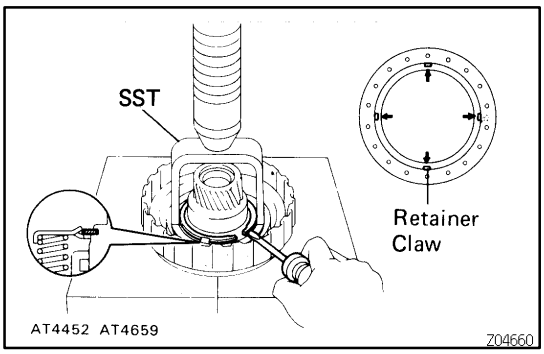

(b) Place SST on the spring retainer, and compress the return spring with a shop press.
SST 09350-30020 (09350-07040)

(c) Install the snap ring with a screwdriver. Be sure the end gap of the snap ring is not aligned with the spring retainer claw.

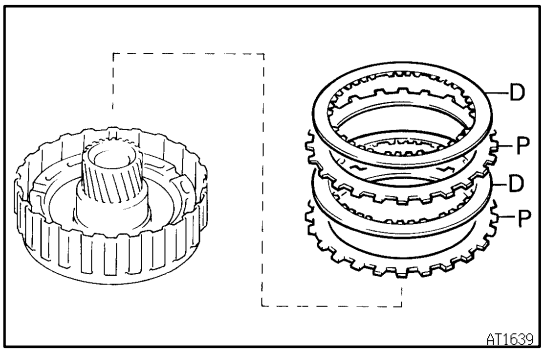

7. INSTALL PLATES, DISCS AND FLANGE

(a) Install the plates and discs.
Install in order: P = Plate D = Disc
P-D-P-D

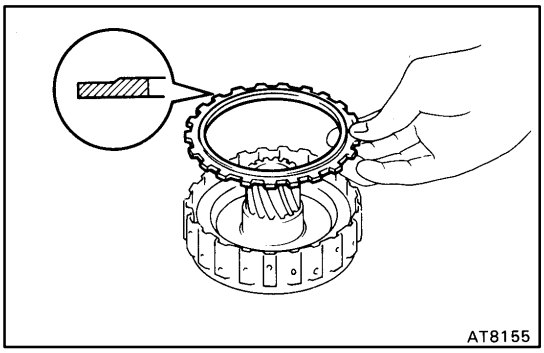

(b) Install the flange, the flat end facing downward.

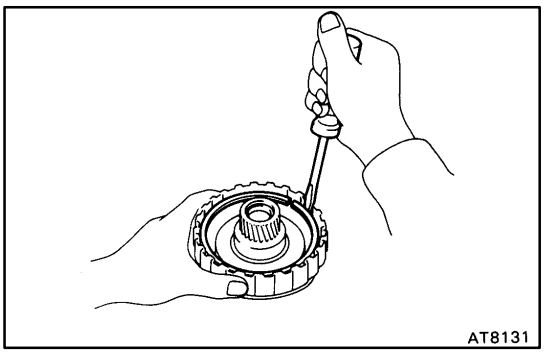

(c) Using a screwdriver, install the snap ring.

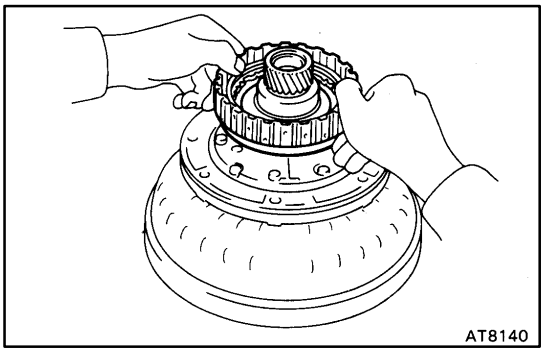

8. CHECK PISTON STROKE OF OVERDRIVE DIRECT CLUTCH

(a) Place the oil pump onto the torque converter clutch, and then place the O/D direct clutch assembly onto the oil pump.

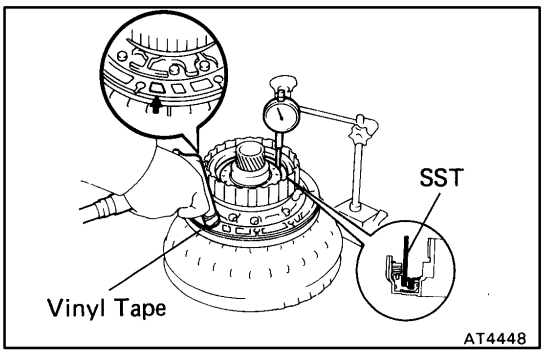

(b) Using SST and a dial indicator, measure the overdrive direct clutch piston stroke while applying and releasing compressed air (392-785 kPa, 4-8 kgf/cm^2, 57-114 psi).
SST 09350-30020 (09350-06120)

Piston stroke:

SUPRA:

1.45-1.70 mm (0.0571-0.0669 in.)

OTHERS:

1.85-2.15 mm (0.0728-0.0846 in.)

If the piston stroke is less than the limit, parts may have been assembled incorrectly, check and reassemble again.

If the piston stroke is non- standard, select another flange.

HINT: There are 6 different thicknesses for the flange.

Flange thickness

mm (in.)

No.	Thickness	No.	Thickness
16	3.6 (0.142)	19	3.3 (0.130)
17	3.5 (0.138)	20	3.2 (0.126)
18	3.4 (0.134)	21	3.1 (0.122)

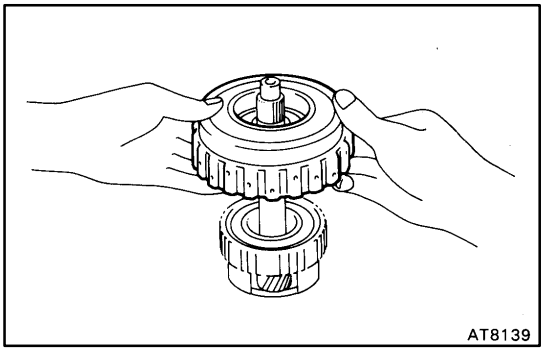

9. INSTALL OVERDRIVE DIRECT CLUTCH ASSEMBLY

(a) Align the flukes of the discs in the direct clutch.

(b) Install the direct clutch assembly onto the O/D planetary gear.

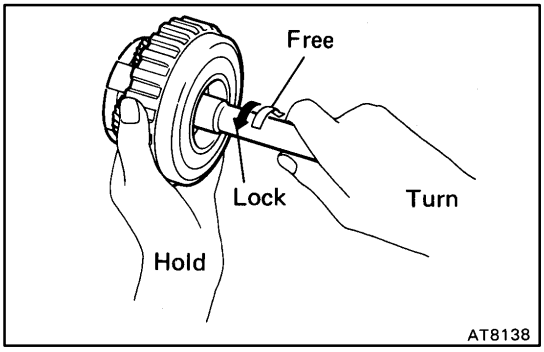

10. CHECK OPERATION OF ONE-WAY CLUTCH

Hold the O/D direct clutch drum and turn the input shaft. Check that the input shaft must be able to turn freely clockwise and locks counterclockwise.

OVERDRIVE BRAKE

AT05F-05

COMPONENTS

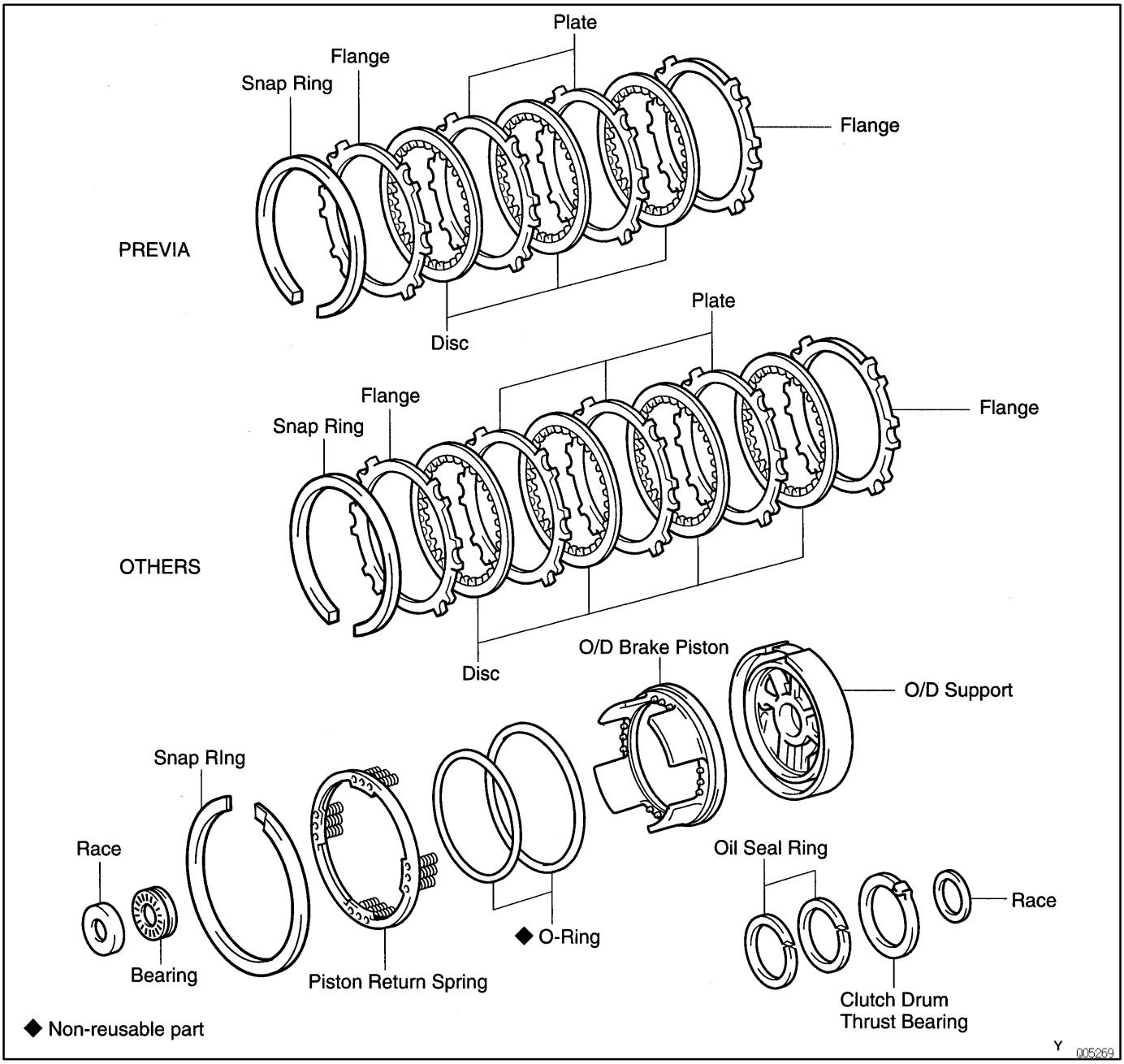

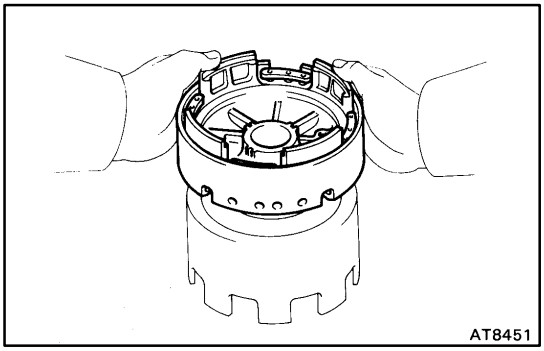

AT05G-05

OVERDRIVE BRAKE DISASSEMBLY

1. CHECK OVERDRIVE BRAKE PISTON MOVEMENT

(a) Place the O/D support assembly onto the direct clutch assembly.

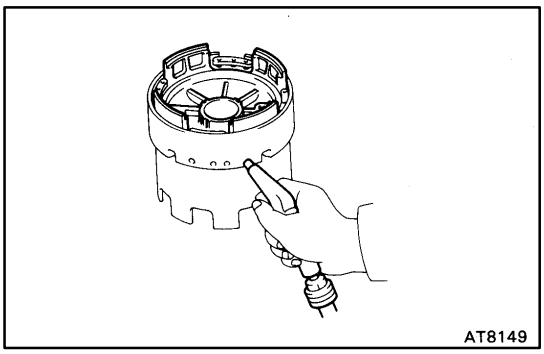

(b) Apply compressed air into the oil passage as shown, and be sure that the O/D brake piston moves smoothly.

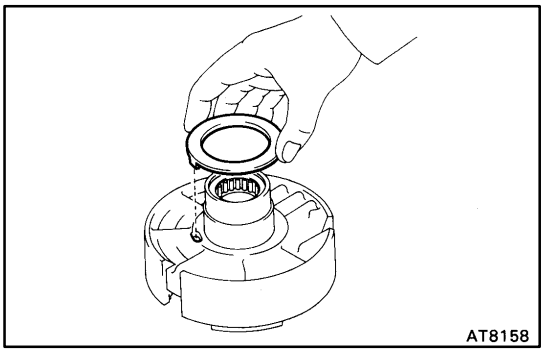

2. REMOVE CLUTCH DRUM THRUST WASHER FROM OVERDRIVE SUPPORT

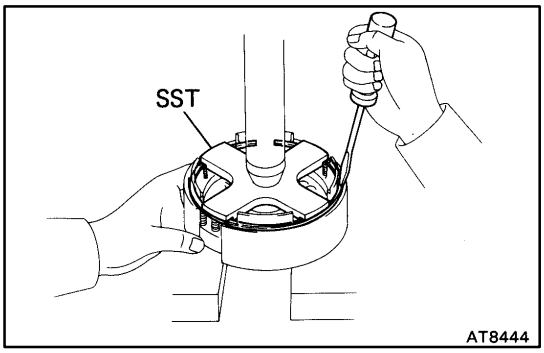

3. REMOVE PISTON RETURN SPRING

(a) Place SST on the spring retainer, and compress the return spring with a shop press.
SST 09350-30020 (09350-07030)
(b) Remove the snap ring with a screwdriver.
(c) Remove the piston return spring.

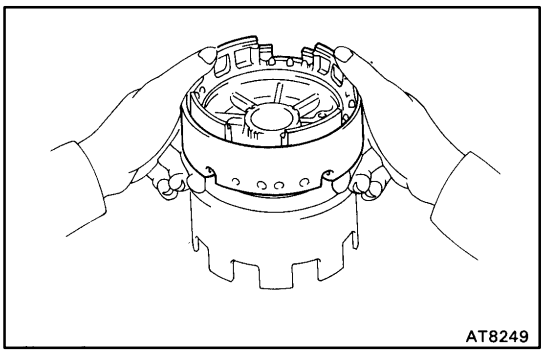

4. REMOVE OVERDRIVE BRAKE PISTON

(a) Place the O/D support onto the direct clutch assembly.

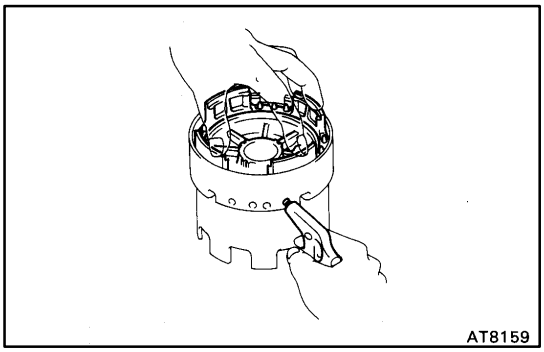

(b) Hold the O/D brake piston so it does not slant, and apply compressed air into the passage to remove the O/D brake piston.
(c) Remove the O/D brake piston.
(d) Remove the 2 O-rings from the piston.

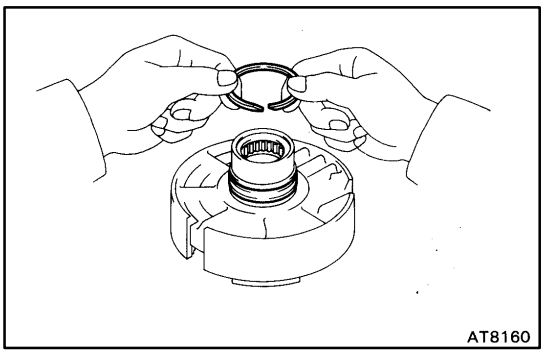

5. REMOVE 2 OIL SEAL RINGS

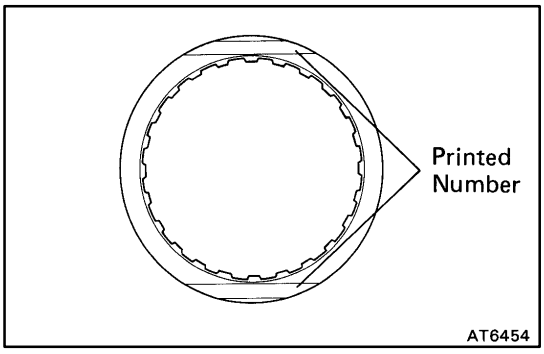

AT05H-06

OVERDRIVE BRAKE INSPECTION

INSPECT DISC, PLATE AND FLANGE

Check to see if the sliding surface of the disc, plate and flange are worn or burnt. If necessary, replace them.

HINT:

★ If the lining of the disc is peeling off or discolored, or even if a part of the printed numbers are defaced, replace all discs.

★ Before assembling new discs, soak them in ATF for at least 15 minutes.

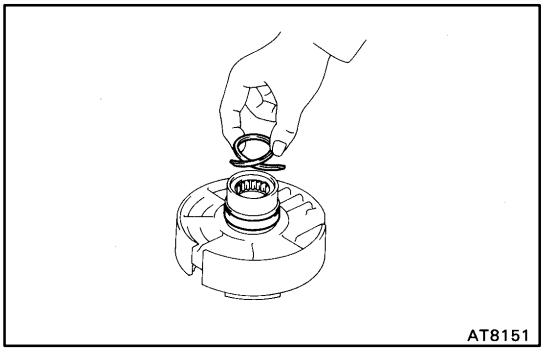

AT05J-07

OVERDRIVE BRAKE ASSEMBLY

1. INSTALL OIL SEAL RINGS

(a) Coat the 2 oil seal rings with ATF.

(b) Install the 2 oil seal rings to the O/D support groove, then snug them down by squeezing their ends together.

NOTICE: Do not spread the ring ends more than necessary.

HINT: After installing the oil seal rings, check that they rotate smoothly.

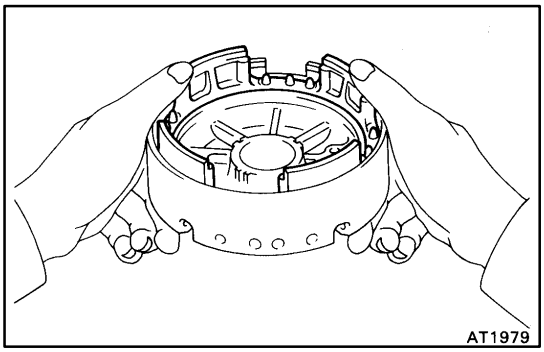

2. INSTALL OVERDRIVE BRAKE PISTON

(a) Coat the 2 new O-rings with ATF and install them on the O/D brake piston.

(b) Being careful not to damage the O-rings, press in the brake piston into the O/D support with both hands.

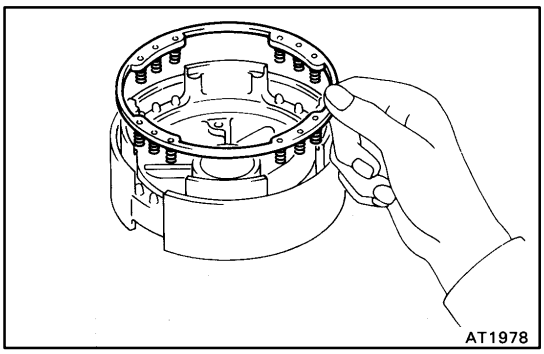

3. INSTALL PISTON RETURN SPRING

(a) Install the piston return spring.

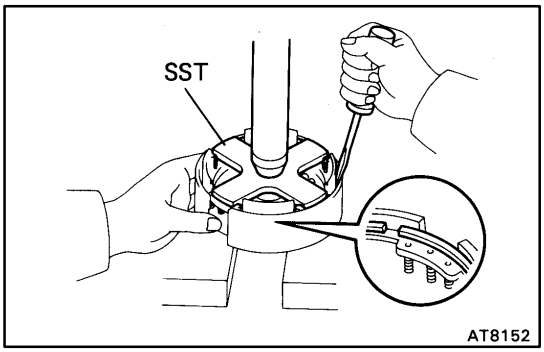

(b) Place SST on the spring retainer, and compress the return spring with a shop press.
SST 09350-30020 (09350-07030)

(c) Install the snap ring with a screwdriver. Be sure the end gap of the snap ring is not aligned with the cutout portion of the O/D support.

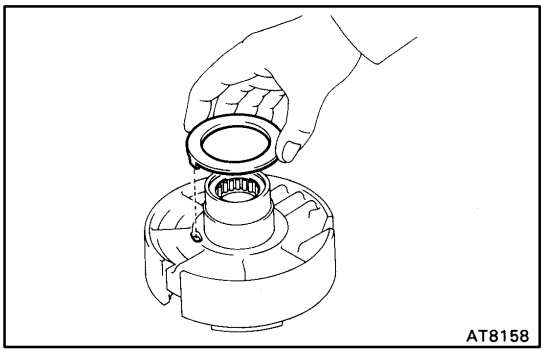

4. INSTALL CLUTCH DRUM THRUST WASHER

Coat the thrust washer with petroleum jelly and install it onto the O/D support.
HINT: Make sure that the lug shape matches the hole on the O/D support.

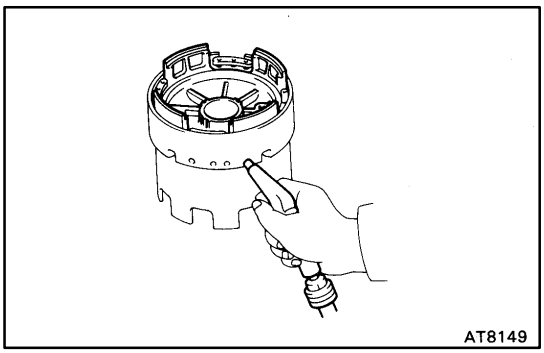

5. CHECK OVERDRIVE BRAKE PISTON MOVEMENT

(a) Place the O/D support assembly onto the direct clutch assembly.

(b) Apply compressed air into the oil passage as shown, and be sure that the O/D brake piston moves smoothly.

DIRECT CLUTCH

AT05K-05

COMPONENTS

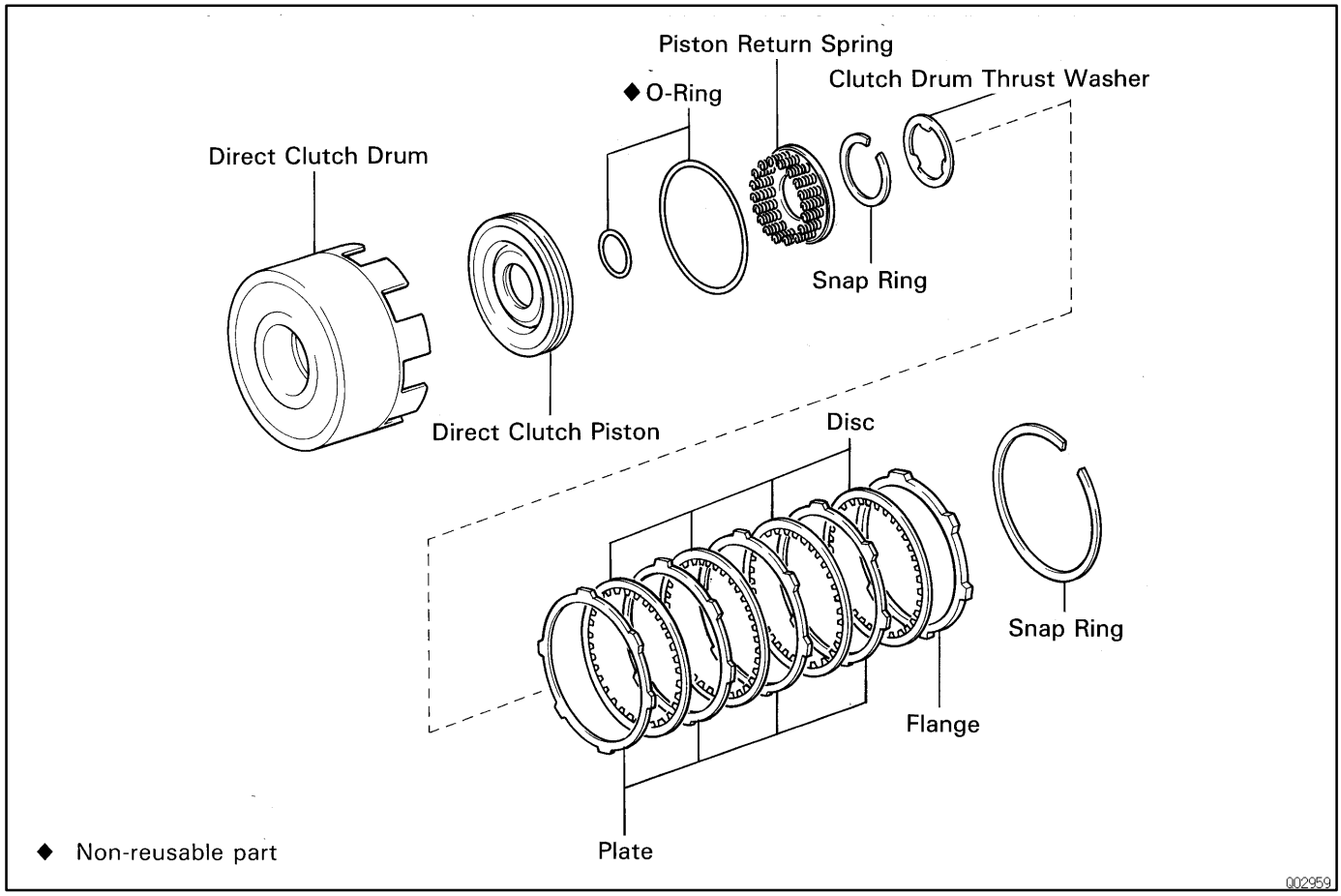

AT05L-07

DIRECT CLUTCH DISASSEMBLY

1. REMOVE DIRECT CLUTCH DRUM FROM FORWARD CLUTCH

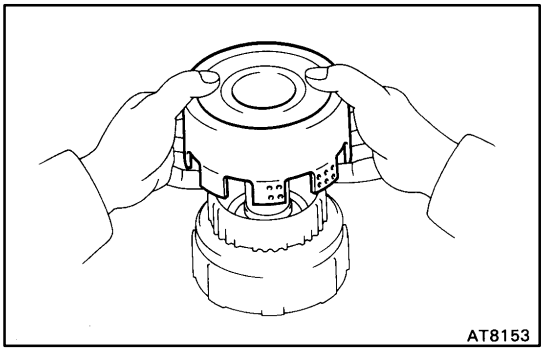

2. REMOVE CLUTCH DRUM THRUST WASHER FROM DIRECT CLUTCH

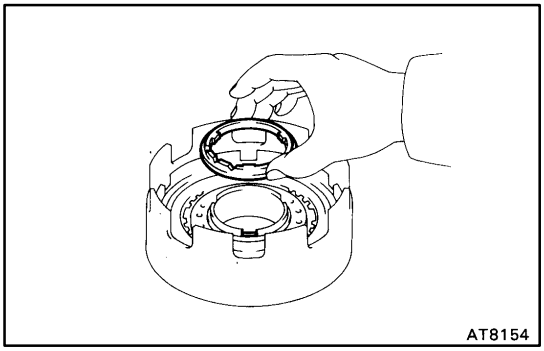

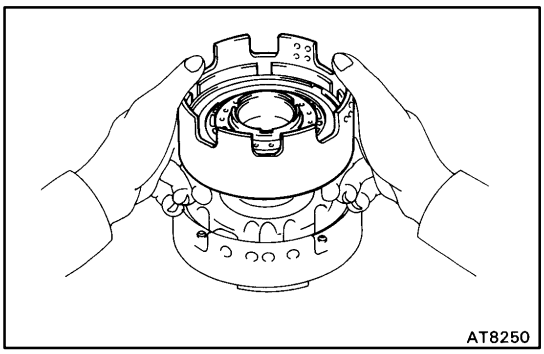

3. CHECK PISTON STROKE OF DIRECT CLUTCH

(a) Place the direct clutch assembly onto the O/D support assembly.

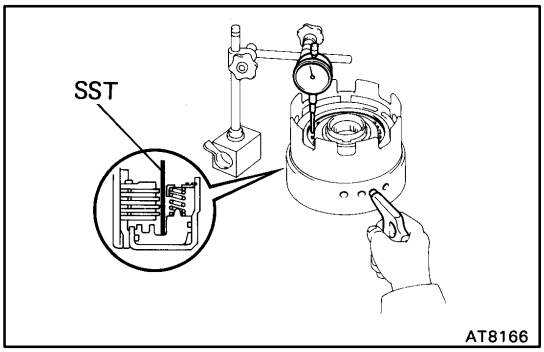

(b) Using SST and a dial indicator, measure the direct clutch piston stroke while applying and releasing compressed air (392-785 kPa, 4-8 kgf/cm^2, 57-114 psi).
SST 09350-30020 (09350-06120)
Piston stroke:
1.37-1.60 mm (0.0359-0.0630 in.)
If the values are non-standard, inspect the discs.

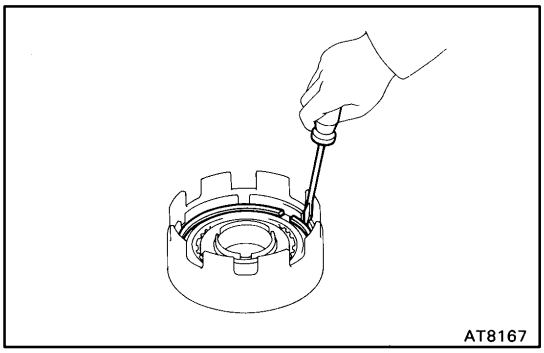

4. REMOVE FLANGE, PLATES AND DISCS

(a) Using a screwdriver, remove the snap ring from the direct clutch drum.
(b) Remove the flange, plates and discs.

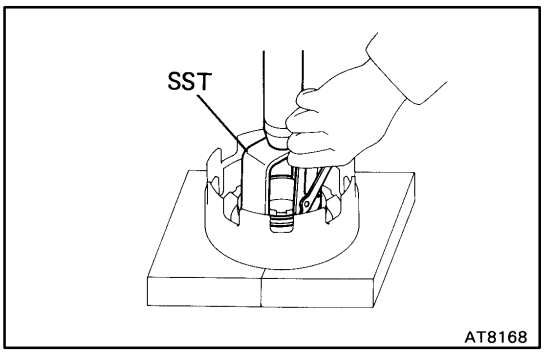

5. REMOVE PISTON RETURN SPRING

(a) Place SST on the spring retainer and compress the return spring with a shop press.
SST 09350-30020 (09350-07040)
(b) Using snap ring pliers, remove the snap ring.
(c) Remove the piston return spring.

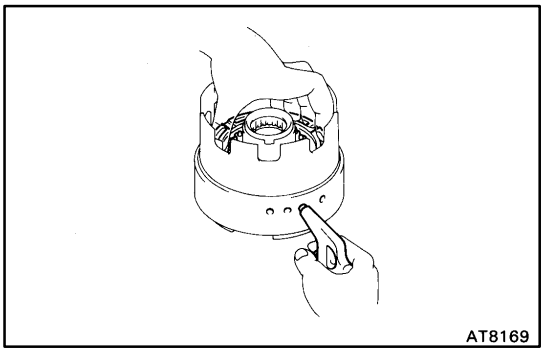

6. REMOVE DIRECT CLUTCH PISTON

(a) Place the direct clutch drum onto the O/D support.
(b) Hold the direct clutch piston, apply compressed air to the O/D support to remove the direct clutch piston.
(c) Remove the direct clutch piston.
(c) Remove the 2 O-rings from the piston.

AT05M-06

DIRECT CLUTCH INSPECTION

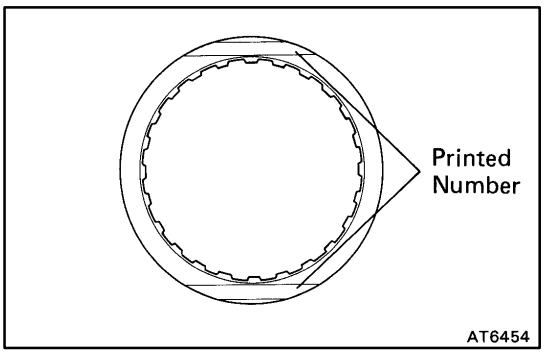

1. INSPECT DISC, PLATE AND FLANGE

Check to see if the sliding surface of the disc, plate and flange are worn or burnt. If necessary, replace them.

HINT:

★ If the lining of the disc is peeling off or discolored, or even if a part of the printed numbers are defaced, replace all discs.

★ Before assembling new discs, soak them in ATF for at least 15 minutes.

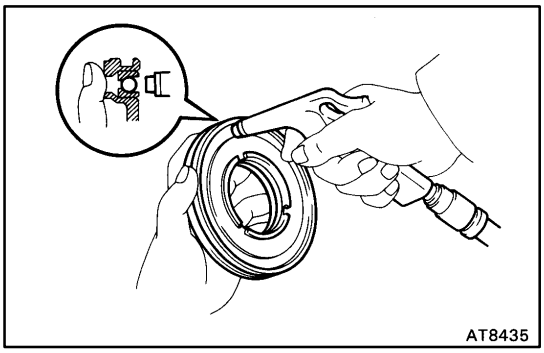

2. CHECK DIRECT CLUTCH PISTON

(a) Check that the check ball is free by shaking the piston.

(b) Check that the valve does not leak by applying low-pressure compressed air.

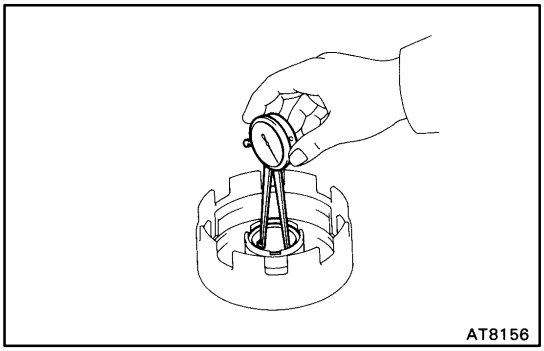

3. CHECK DIRECT CLUTCH DRUM BUSHING

Using a dial indicator, measure the inside diameter of the clutch drum bushing.

Maximum inside diameter:

53.99 mm (2.1256 in.)

If the inside diameter is greater than the maximum, replace the clutch drum.

AT05N-08

DIRECT CLUTCH ASSEMBLY

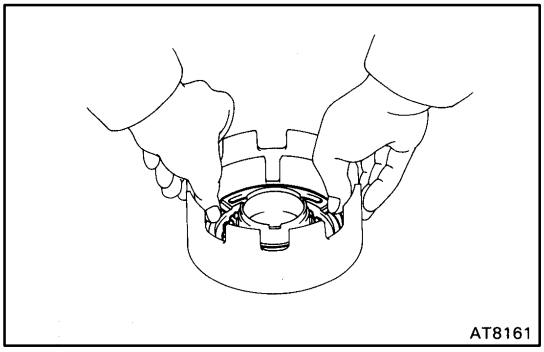

1. INSTALL DIRECT CLUTCH PISTON TO DIRECT CLUTCH DRUM

(a) Coat new O-rings with ATF and install them on the direct clutch piston.

(b) Being careful not to damage the O-rings, press in the direct clutch piston into the clutch drum with both hands.

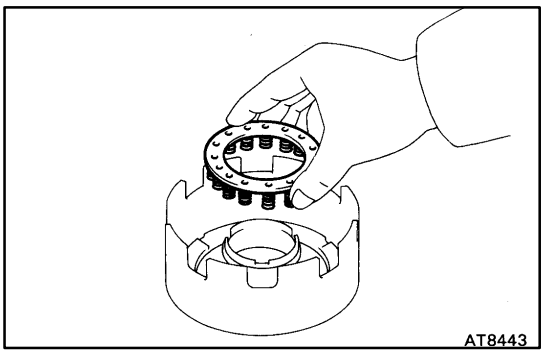

2. INSTALL PISTON RETURN SPRING

(a) Install the piston return spring.

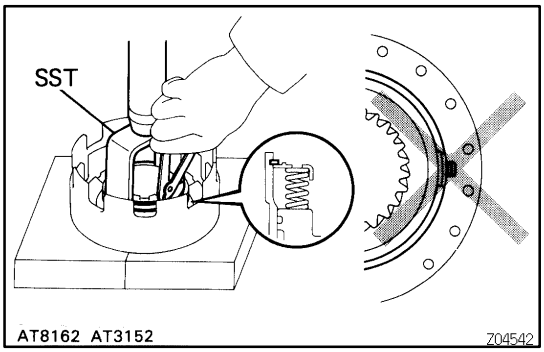

(b) Place SST on the spring retainer, and compress the return spring with a shop press.
SST 09350-30020 (09350-07040)

(c) Install the snap ring with snap ring pliers. Be sure the end gap of the snap ring is not aligned with the spring retainer.

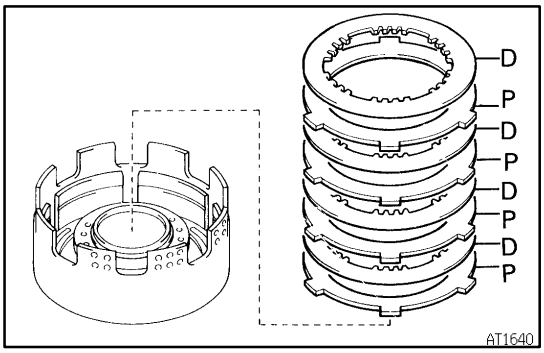

3. INSTALL PLATES, DISCS AND FLANGE

(a) Install the plates and discs.
Install in order: P = Plate D = Disc
P-D-P-D-P-D-P-D

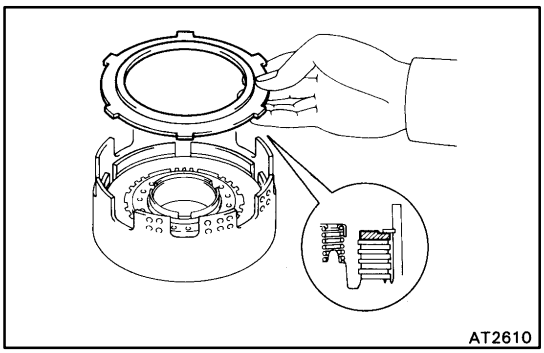

(b) Install the flange, the flat end facing downward.

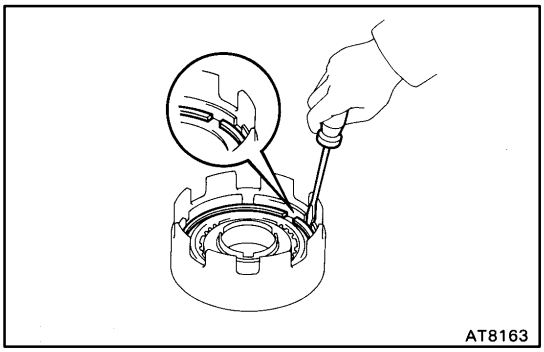

(c) Install the snap ring with a screwdriver. Be sure the end gap of the snap ring is not aligned with the cutout portion of the direct clutch drum.

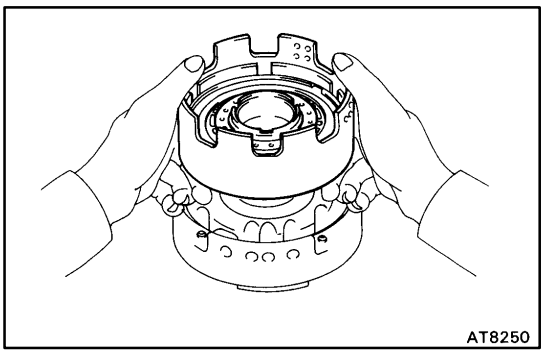

4. CHECK PISTON STROKE OF DIRECT CLUTCH

(a) Place the direct clutch assembly onto the O/D support assembly.

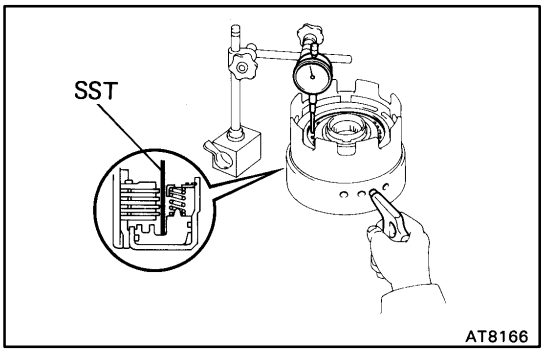

(b) Using SST and a dial indicator, measure the direct clutch piston stroke while applying and releasing compressed air (392-785 kPa, 4-8 kgf/cm^2, 57-114 psi).
SST 09350-30020 (09350-06120)
Piston stroke:
1.37-1.60 mm (0.0539-0.0630 in.)
If the piston stroke is less than the limit, parts may have been assembled incorrectly, so check and reassemble again.
If the piston stroke is non- standard, select another flange.
HINT: There are 8 different thicknesses for the flange.
Flange thickness
mm (in.)

No.	Thickness	No.	Thickness
33	3.0 (0.118)	29	3.4 (0.134)
32	3.1 (0.122)	28	3.5 (0.138)
31	3.2 (0.126)	27	3.6 (0.142)
30	3.3 (0.130)	34	3.7 (0.146)

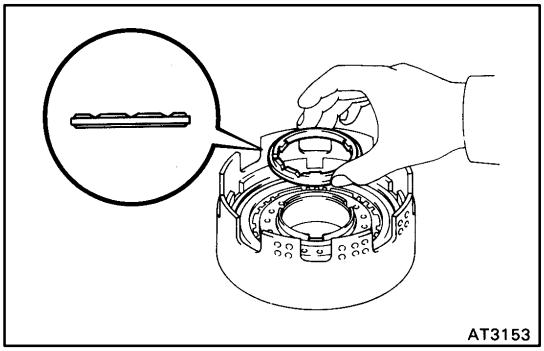

5. INSTALL CLUTCH DRUM THRUST WASHER

Coat the thrust washer with petroleum jelly and install it onto the direct clutch.

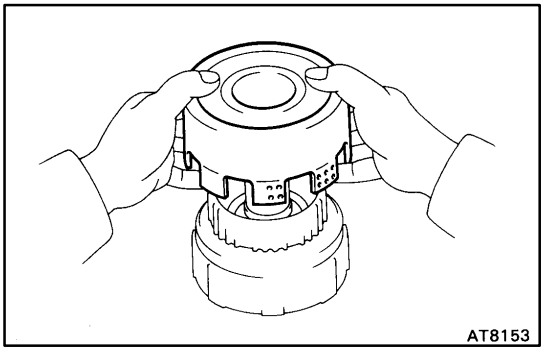

6. INSTALL DIRECT CLUTCH TO FORWARD CLUTCH

(a) Align the flukes of discs in the direct clutch.
(b) Install the direct clutch onto the forward clutch.

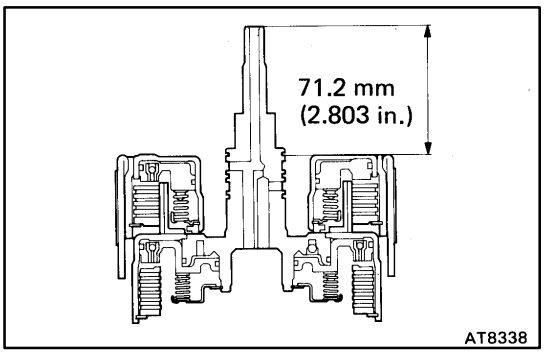

(c) Check that the distance from the direct clutch end to the forward clutch end is 71.2 mm (2.803 in.).
If the distance is less than the above value, parts may have been assembled incorrectly, check and reassemble again.

FORWARD CLUTCH

AT05P-05

COMPONENTS

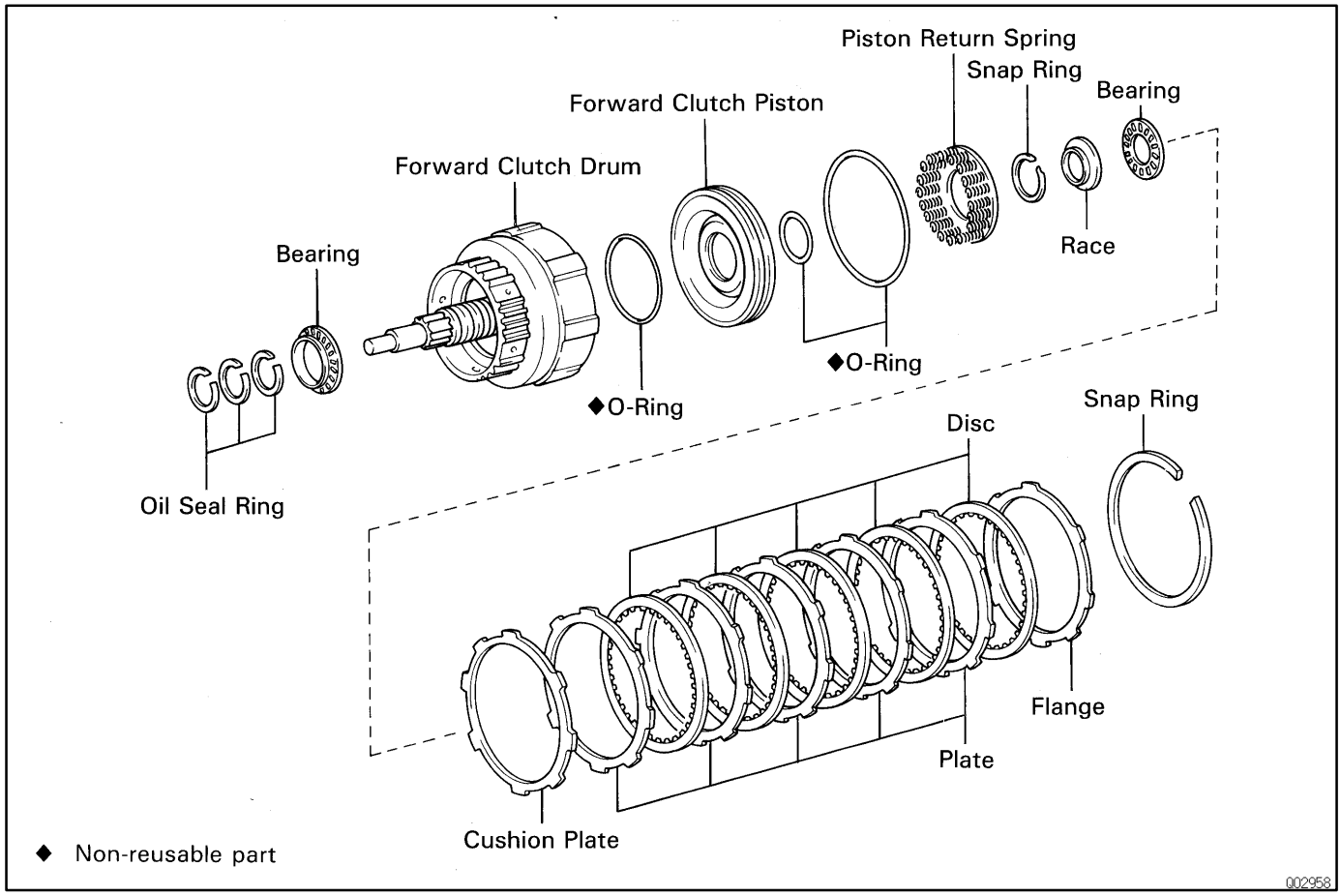

AT05Q-07

FORWARD CLUTCH DISASSEMBLY

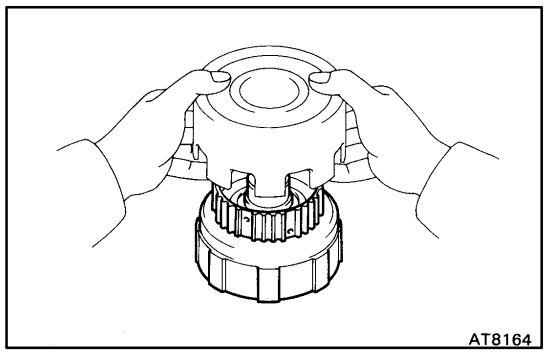

1. REMOVE FORWARD CLUTCH ASSEMBLY FROM DIRECT CLUTCH ASSEMBLY

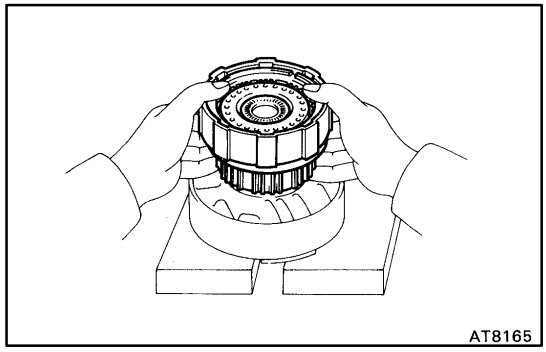

2. PLACE FORWARD CLUTCH ONTO OVERDRIVE SUPPORT

(a) Place wooden blocks or similar, to prevent forward clutch shaft from touching the work stand, and place the O/D support on them.

(b) Place the forward clutch onto the O/D support.

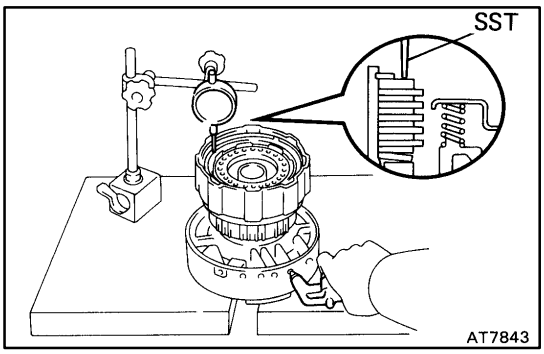

3. CHECK PACK CLEARANCE OF FORWARD CLUTCH

Using SST and a dial indicator, measure the forward clutch piston stroke while applying and releasing compressed air (392-785 kPa, 4-8 kgf/cm^2, 57-114 psi).

SST 09350-30020 (09350-06120)

Pack clearance:

0.5-0.9 mm (0.020-0.035 in.)

If the values are non-standard, inspect the discs.

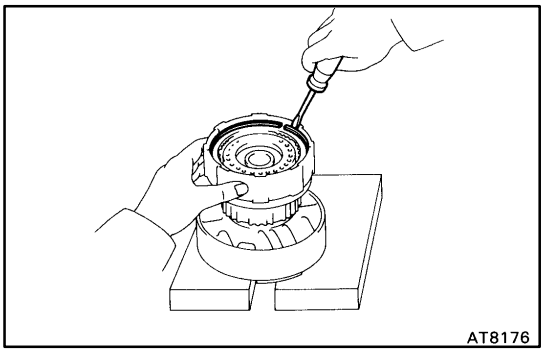

4. REMOVE FLANGE, PLATES AND DISCS

(a) Using a screwdriver, remove the snap ring from the forward clutch drum.

(b) Remove the flange, plates and discs.

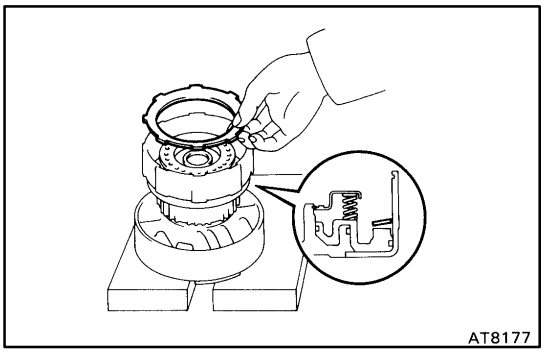

5. REMOVE CUSHION PLATE

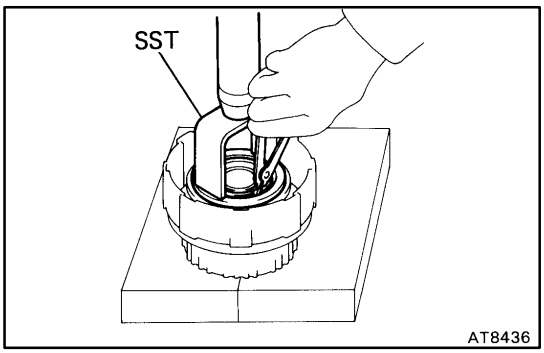

6. REMOVE PISTON RETURN SPRING

(a) Place SST on the spring retainer and compress the return spring with a shop press.
SST 09350-30020 (09350-07040)

(b) Using snap ring pliers, remove the snap ring.

(c) Remove the piston return spring.

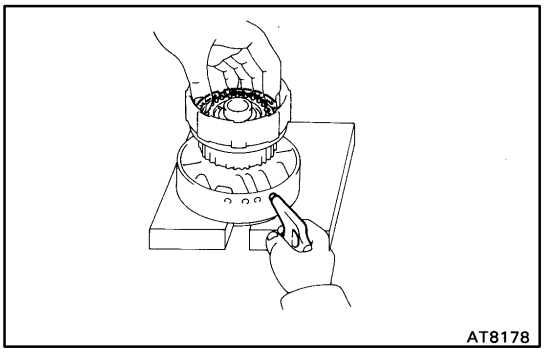

7. REMOVE FORWARD CLUTCH PISTON

(a) Place the forward clutch drum onto the O/D support.

(b) Hold the forward clutch piston with hand, apply compressed air to the O/D support to remove the forward clutch piston.

(c) Remove the forward clutch piston.

(d) Remove the 2 O-rings from the piston.

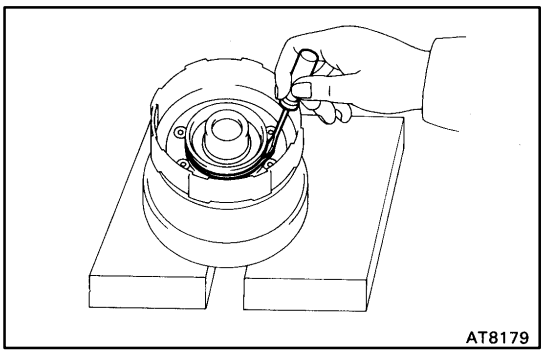

8. REMOVE O-RING FROM FORWARD CLUTCH DRUM

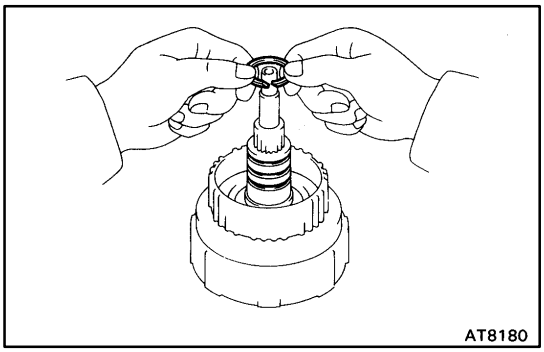

9. REMOVE 3 OIL SEAL RINGS

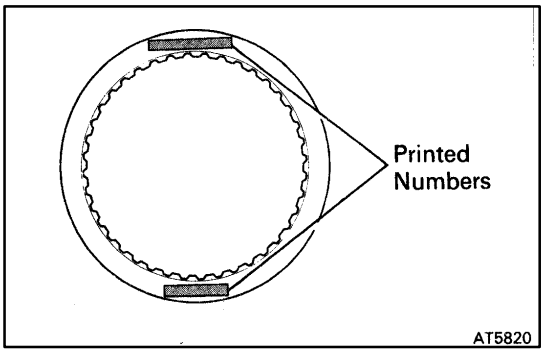

AT05R-06

FORWARD CLUTCH INSPECTION

1. INSPECT DISC, PLATE AND FLANGE

Check to see if the sliding surface of the disc, plate and flange are worn or burnt. If necessary, replace them.

HINT:

★ If the lining of the disc is peeling off or discolored, or even if a part of the printed numbers are defaced, replace all discs.

★ Before assembling new discs, soak them in ATF for at least 15 minutes.

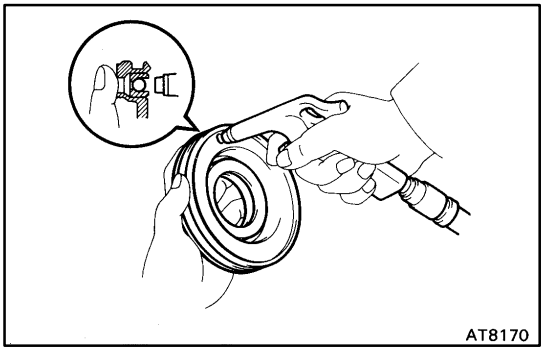

2. CHECK FORWARD CLUTCH PISTON

(a) Check that the check ball is free by shaking the piston.

(b) Check that the valve does not leak by applying low-pressure compressed air.

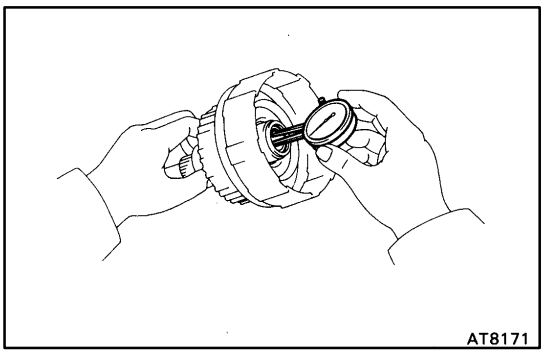

3. CHECK FORWARD CLUTCH DRUM BUSHING

Using a dial indicator, measure the inside diameter of the forward clutch drum bushing.

Maximum inside diameter:

24.08 mm (0.9480 in.)

If the inside diameter is greater than the maximum, replace the forward clutch drum.

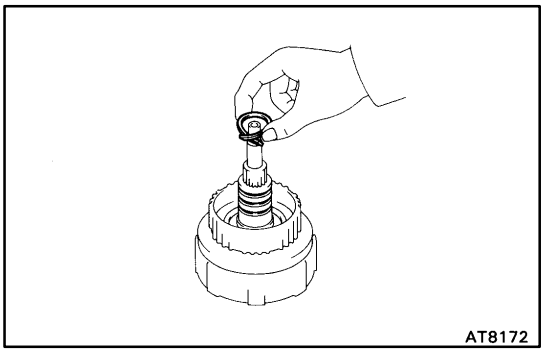

AT05S-08

FORWARD CLUTCH ASSEMBLY

1. INSTALL OIL SEAL RINGS

(a) Coat the 3 oil seal rings with ATF.

(b) Install the 3 oil seal rings to the forward clutch drum groove, then snug them down by squeezing their ends together.

NOTICE: Do not spread the ring ends more than necessary.

HINT: After installing the oil seal rings, check that they rotate smoothly.

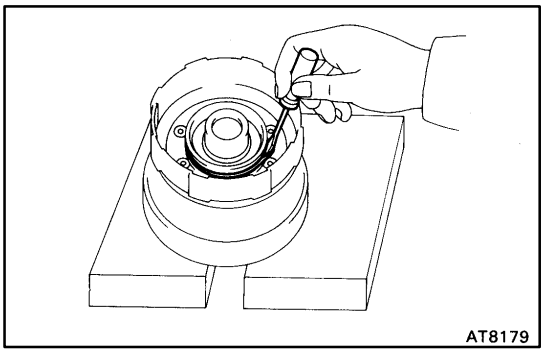

2. INSTALL NEW O-RING TO FORWARD CLUTCH DRUM

Coat a new O-ring with ATF and install it on the forward clutch drum.

3. INSTALL FORWARD CLUTCH PISTON

(a) Coat new O-rings with ATF and install them on the forward clutch piston with a screwdriver.

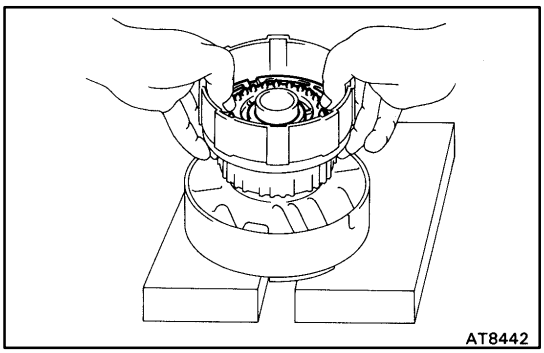

(b) Being careful not to damage the O-rings, press the clutch piston into the forward clutch drum with both hands.

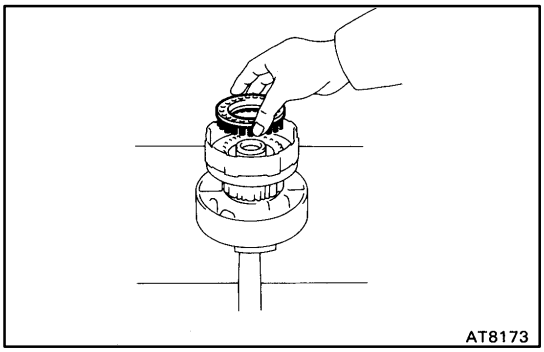

4. INSTALL PISTON RETURN SPRING

(a) Install the piston return spring.

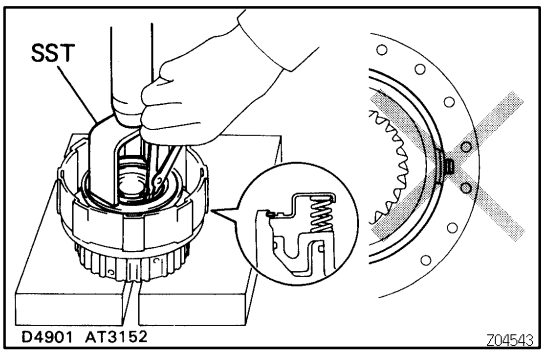

(b) Place SST on the spring retainer, and compress the return spring with a shop press.
SST 09350-30020 (09350-07040)

(c) Install the snap ring with snap ring pliers. Be sure the end gap of the snap ring is not aligned with the spring retainer claw.

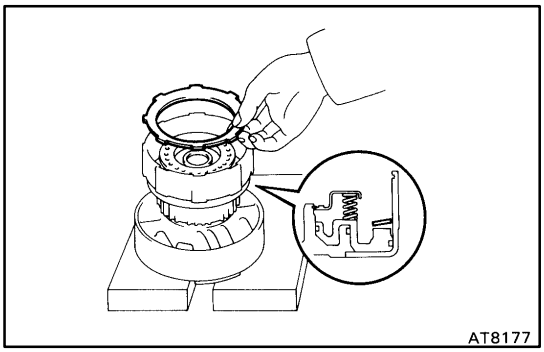

5. INSTALL CUSHION PLATE ROUNDED END DOWN

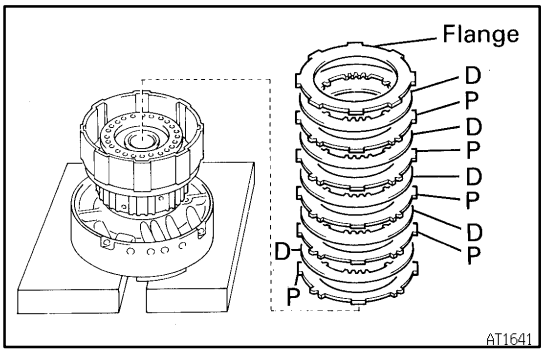

6. INSTALL PLATES, DISCS AND FLANGE

(a) Install in order: P = Plate D = Disc
P-D-P-D-P-D-P-D-P-D

(b) And then install the flange, the rounded edge facing downward.
HINT: There are 8 different thicknesses for the flange.
Flange thickness
mm (in.)

No.	Thickness	No.	Thickness
61	3.0 (0.118)	44	3.8 (0.150)
60	3.2 (0.126)	42	4.0 (0.157)
45	3.4 (0.134)	63	4.2 (0.165)
62	3.6 (0.142)	64	4.4 (0.173)

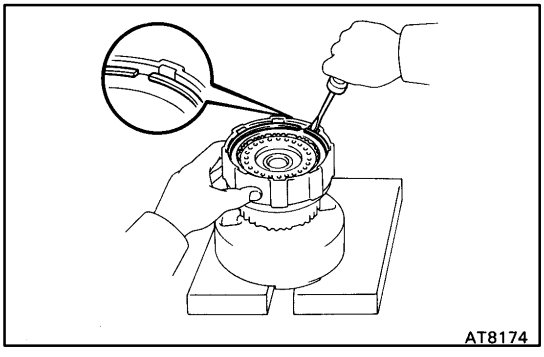

(c) Install the snap ring with a screwdriver. Be sure the end gap of the snap ring is not aligned with the cutout portion of the forward clutch drum.

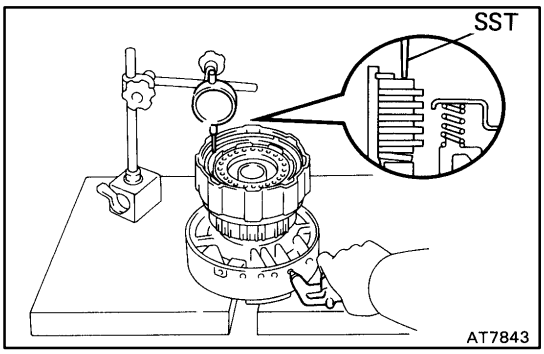

7. CHECK PACK CLEARANCE OF FORWARD CLUTCH

Using SST and a dial indicator, measure the forward clutch piston stroke while applying and releasing compressed air (392-785 kPa, 4-8 kgf/cm^2, 57-114 psi).

SST 09350-30020 (09350-06120)

Pack clearance:

0.5-0.9 mm (0.020-0.035 in.)

If the values are non-standard, inspect the discs.

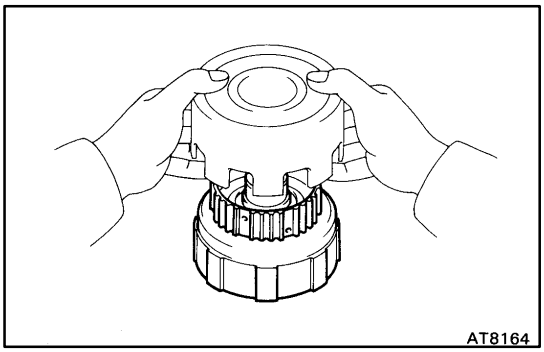

8. INSTALL DIRECT CLUTCH TO FORWARD CLUTCH

(a) Make sure that the thrust washer is installed to the direct clutch drum.

(b) Align the flukes of discs in the direct clutch.

(c) Install the direct clutch onto the forward clutch.

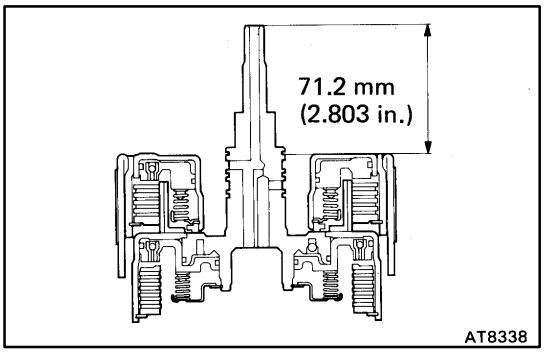

(d) Check that the distance from the direct clutch end to the forward clutch end is 71.2 mm (2.803 in.).

If the distance is less than the above value, parts may have been assembled incorrectly, check and reassemble again.

SECOND COAST BRAKE

AX0AG-0A

COMPONENTS

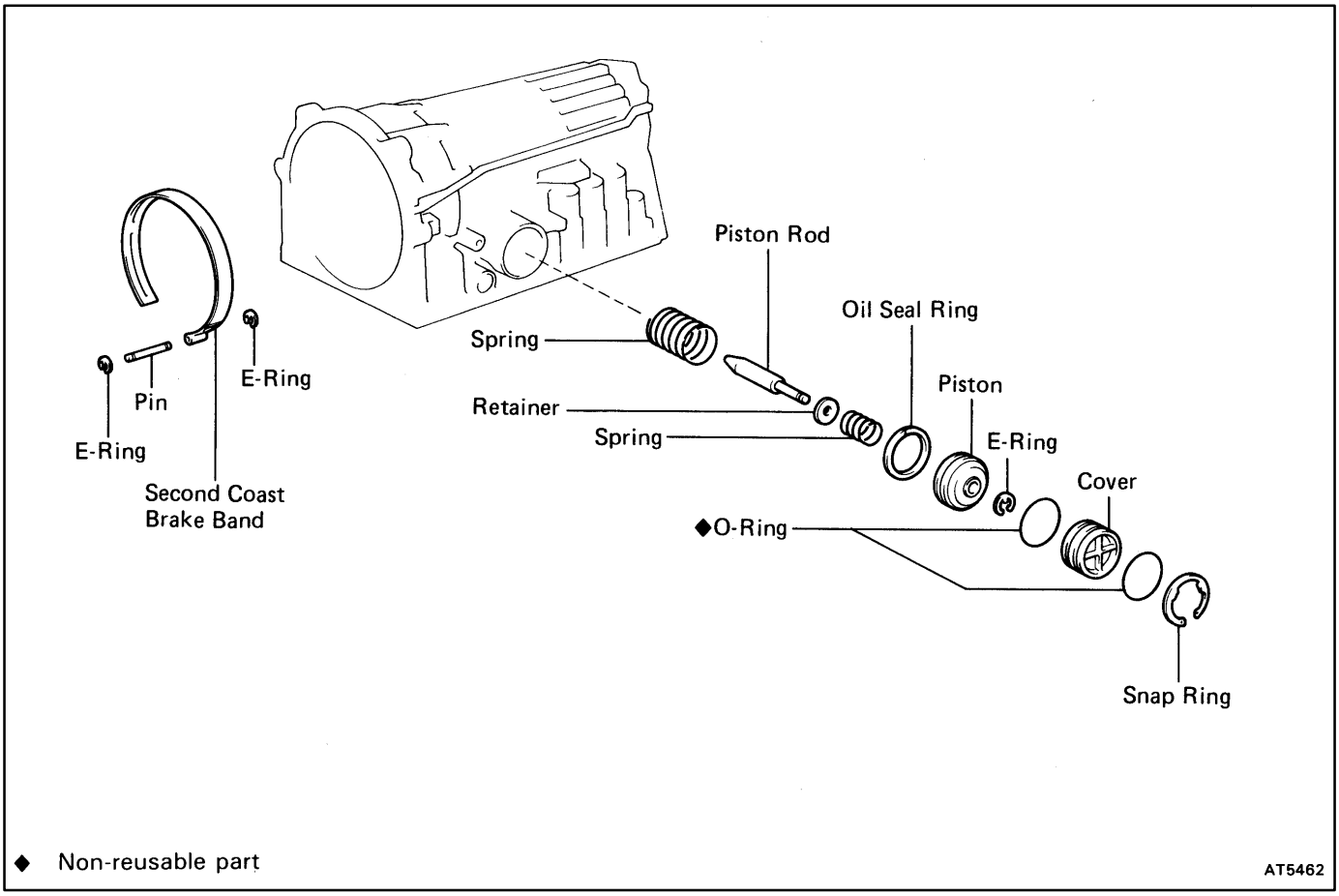

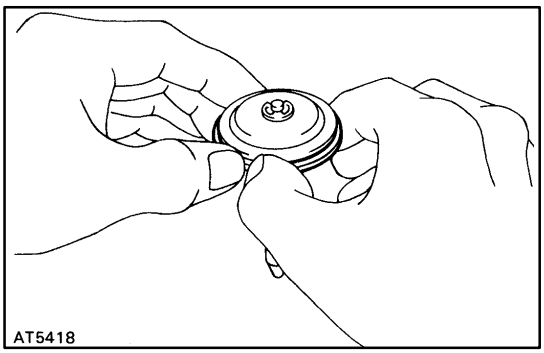

SECOND COAST BRAKE DISASSEMBLY

AX0AH-0A

1. REMOVE SECOND COAST BRAKE PISTON OIL SEAL RING

Remove the oil seal ring from the piston.

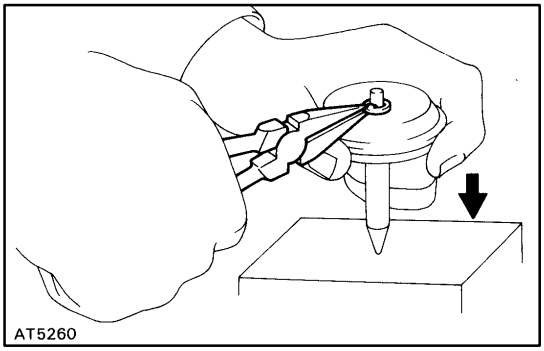

2. REMOVE SECOND COAST BRAKE PISTON ROD

(a) Firmly hold down the piston, then compress the compression spring.

(b) Using needle nose-pliers, remove the E-ring.

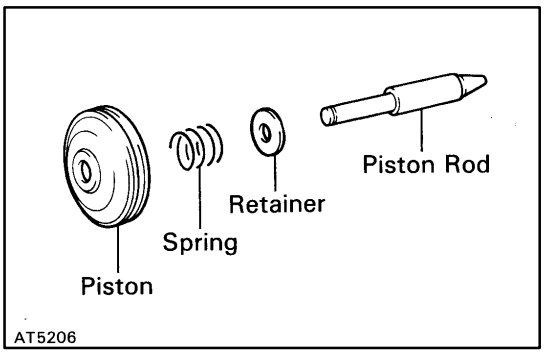

(c) Remove the compression spring, retainer and piston rod.

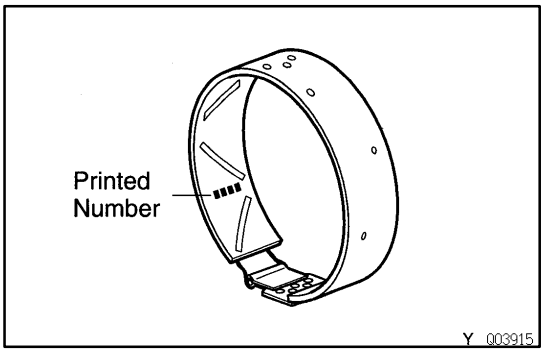

AT0SN-01

SECOND COAST BRAKE BAND INSPECTION

INSPECT BRAKE BAND

If the lining of the brake band is peeling off or discolored, or even part of the printed numbers are defaced, replace the brake band.

HINT: Before assembling the new band, soak it in ATF for at least 15 minutes.

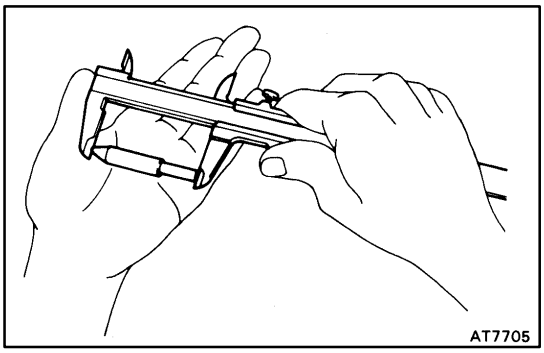

AX0AK-0D

SECOND COAST BRAKE PISTON ASSEMBLY

1. SELECT PISTON ROD

If the band is OK with piston stroke not within the standard value, select a new piston rod.

There are 2 different lengths of piston rod.

Piston rod length:

71.4 mm (2.811 in.)

72.9 mm (2.870 in.)

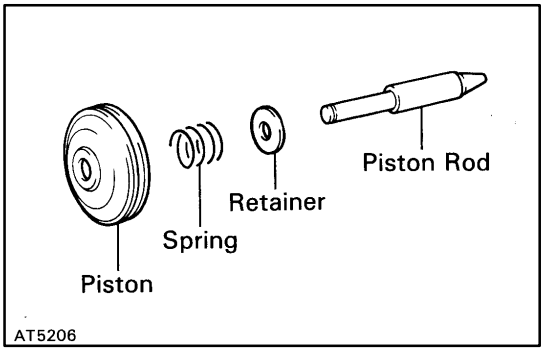

2. INSTALL PISTON ROD

(a) Install the retainer, compression spring and piston to the piston rod.

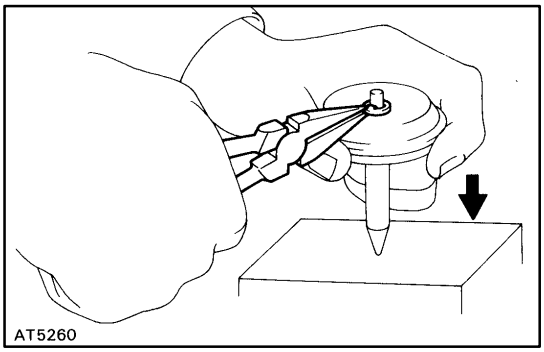

(b) Firmly hold down the piston, then compress the compression spring.

(c) Using needle-nose pliers, install the E-ring.

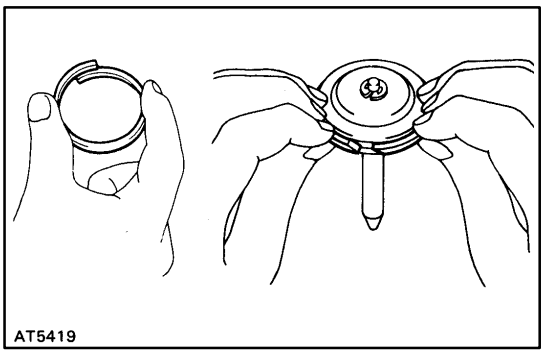

3. INSTALL SECOND COAST BRAKE PISTON OIL SEAL RING

(a) Coat the oil seal ring with ATF.

(b) Install the oil seal ring to the piston groove, then snug it down by squeezing its ends together.

NOTICE: Do not spread the ring ends more than necessary.

FRONT PLANETARY GEAR

AT05T-03

COMPONENTS

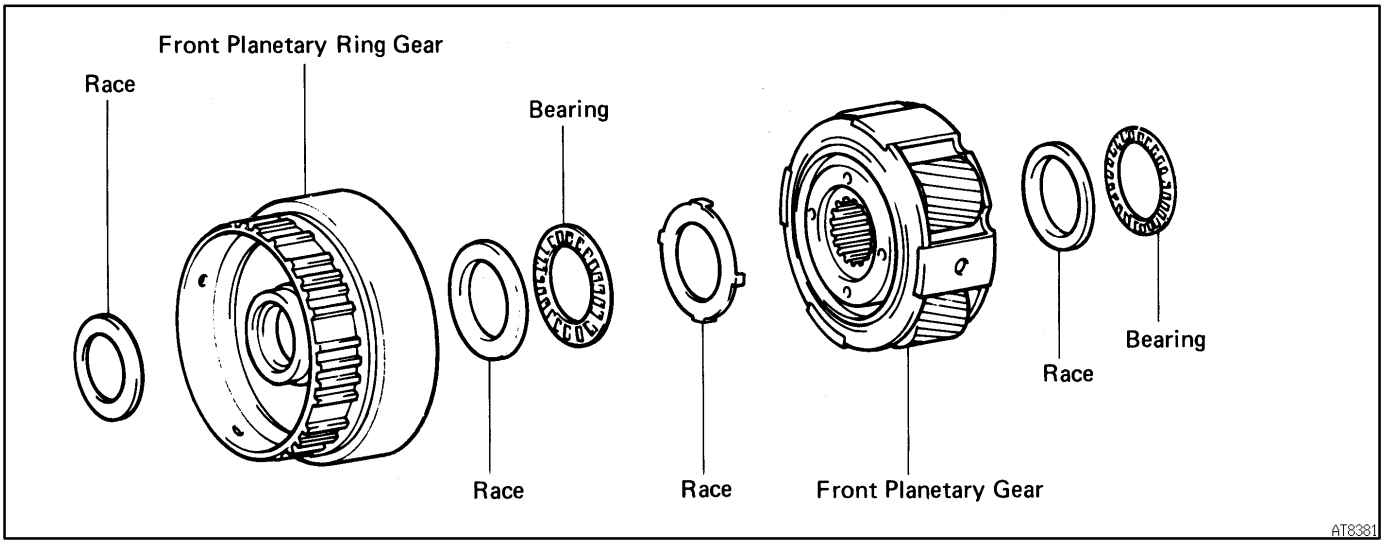

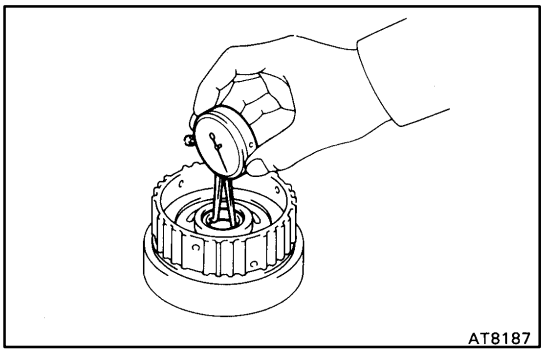

FRONT PLANETARY GEAR INSPECTION

AT05U-04

1. CHECK FRONT PLANETARY RING GEAR BUSHING

Using a dial indicator, measure the inside diameter of the planetary ring gear bushing.

Maximum inside diameter:

24.08 mm (0.9480 in.)

If the inside diameter is greater than the maximum, replace the planetary ring gear.

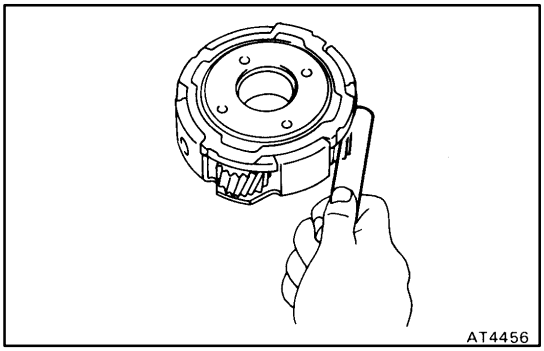

2. MEASURE PLANETARY PINION GEAR THRUST CLEARANCE

Using a feeler gauge, measure the planetary pinion gear thrust clearance.

Standard clearance:

0.20-0.60 mm (0.0079-0.0236 in.)

Maximum clearance:

1.00 mm (0.0394 in.)

If the clearance is greater than the maximum, replace the planetary gear assembly.

PLANETARY SUN GEAR

AT05V-03

COMPONENTS

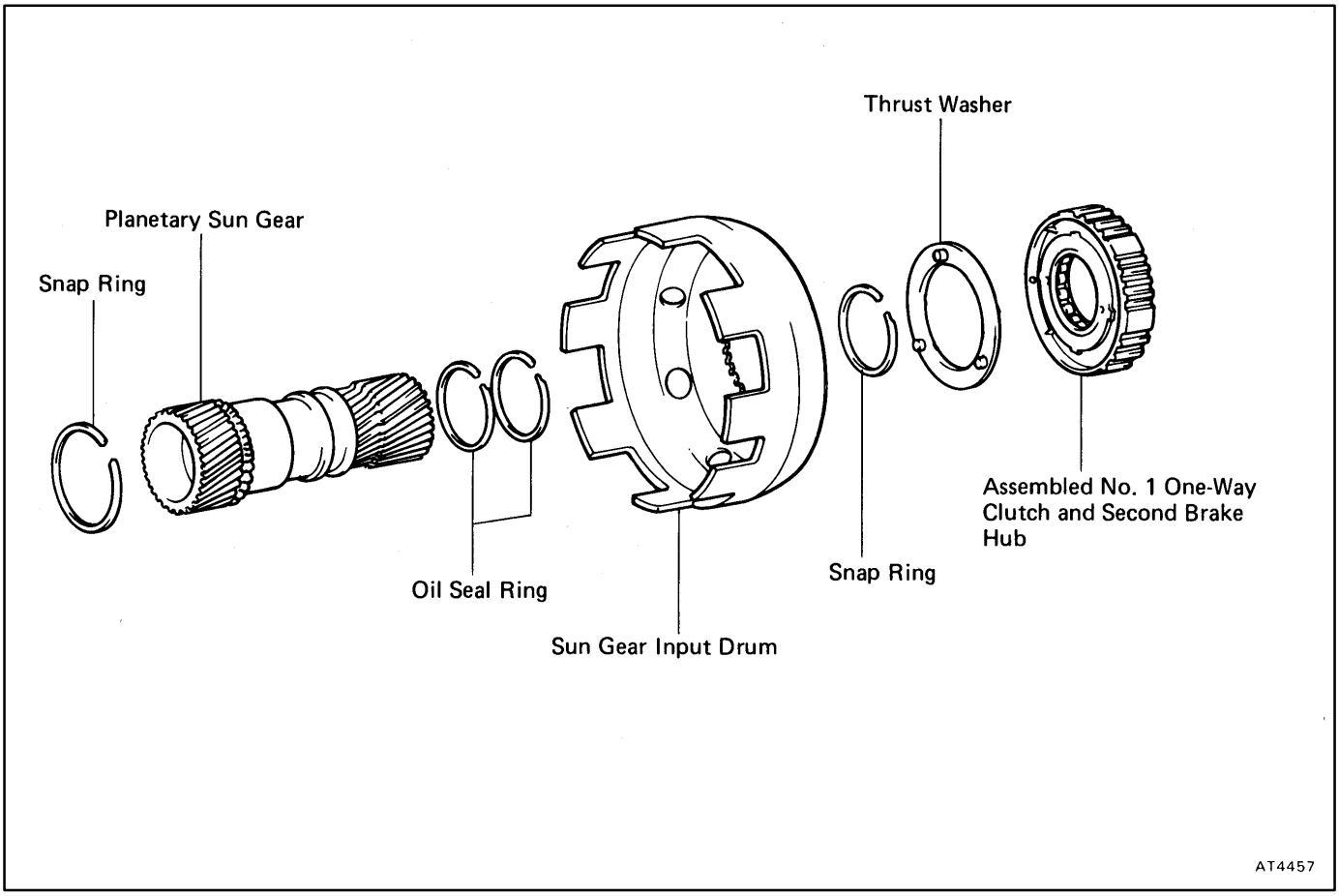

AT05W-04

PLANETARY SUN GEAR AND NO.1 ONE-WAY CLUTCH DISASSEMBLY

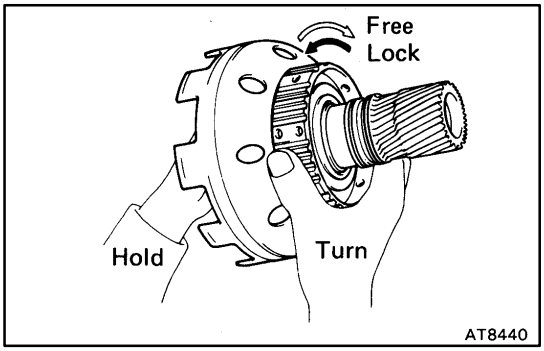

1. CHECK OPERATION OF NO.1 ONE-WAY CLUTCH

Hold the planetary sun gear and turn the second brake hub. Check that the second brake hub must be able to turn freely clockwise and locks counterclockwise.

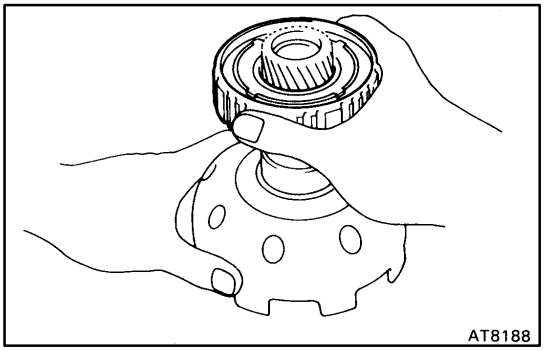

2. REMOVE ASSEMBLED NO.1 ONE-WAY CLUTCH AND SECOND BRAKE HUB

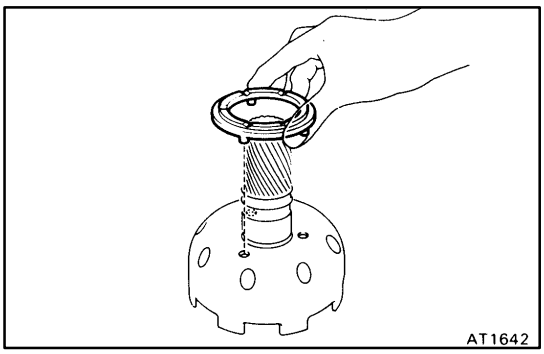

3. REMOVE THRUST WASHER FROM SUN GEAR INPUT DRUM

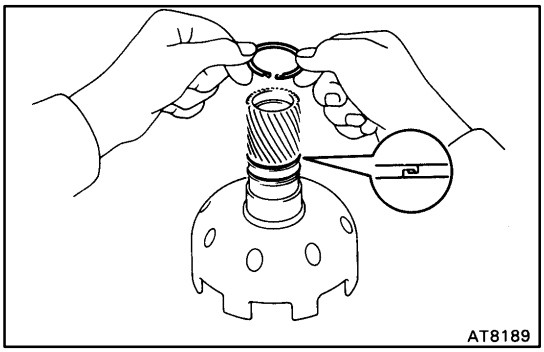

4. REMOVE 2 OIL SEAL RINGS

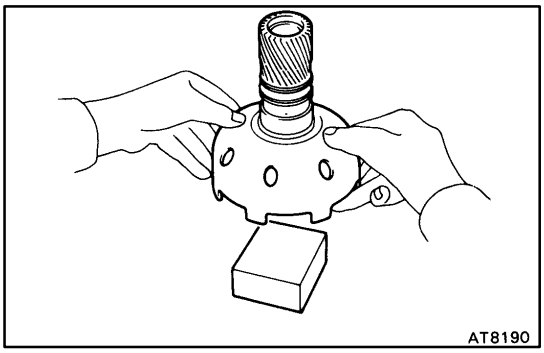

5. REMOVE SUN GEAR INPUT DRUM FROM PLANETARY SUN GEAR

(a) Use a wooden block or similar, as work stand.

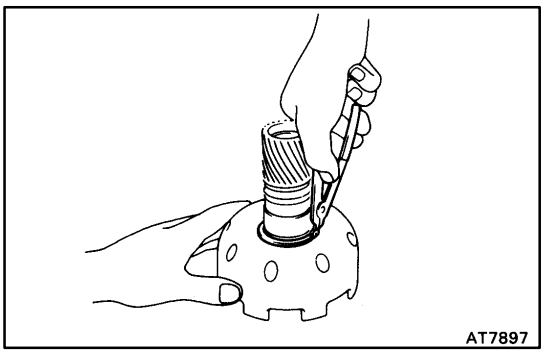

(b) Using snap ring pliers, remove the snap ring.
(c) Remove the sun gear input drum from the planetary sun gear.

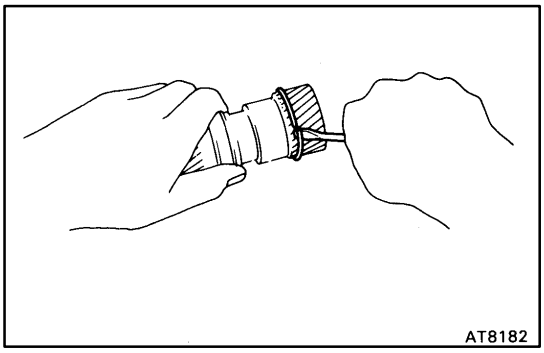

6. REMOVE SNAP RING FROM PLANETARY SUN GEAR

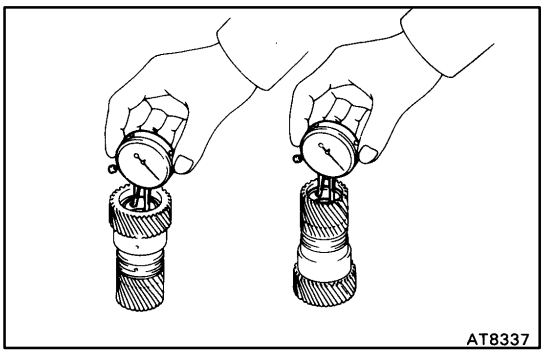

AT05X-03

PLANETARY SUN GEAR INSPECTION

CHECK PLANETARY SUN GEAR BUSHINGS

Using a dial indicator, measure the inside diameter of the planetary sun gear bushings.

Maximum inside diameter:

27.08 mm (1.0661 in.)

If the inside diameter is greater than the maximum, replace the planetary sun gear.

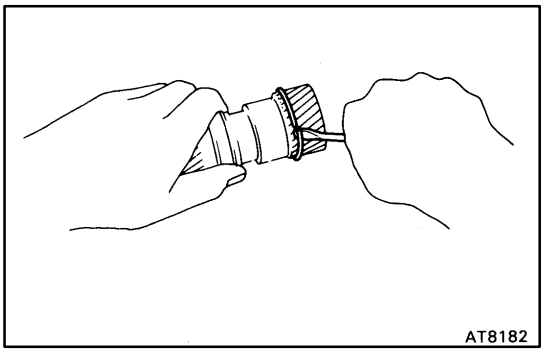

AT05Y-07

PLANETARY SUN GEAR AND NO.1 ONE-WAY CLUTCH ASSEMBLY

1. INSTALL SNAP RING TO PLANETARY SUN GEAR

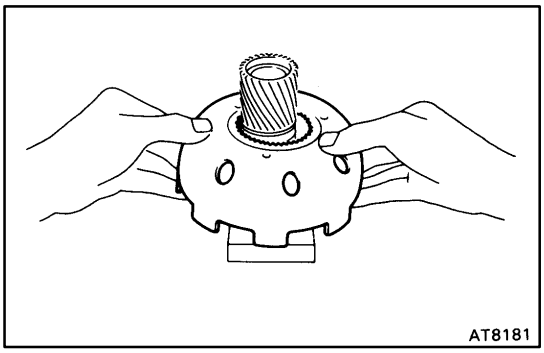

2. INSTALL SUN GEAR INPUT DRUM

(a) Place a wooden block or similar, as a work stand and place the planetary sun gear onto it.

(b) Install the sun gear input drum onto the planetary sun gear.

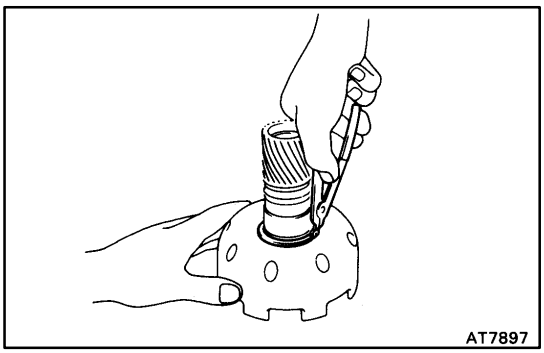

(c) Install the snap ring with snap ring pliers.

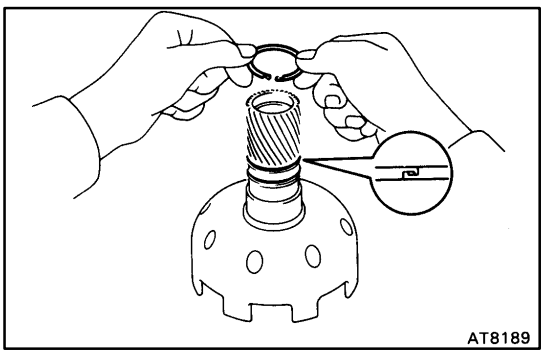

3. INSTALL OIL SEAL RINGS

(a) Coat the 2 oil seal rings with ATF.

(b) Install the 2 oil seal rings onto the planetary sun gear.

NOTICE: Do not spread the ring ends too much.

HINT: After installing the oil seal rings, check that they rotate smoothly.

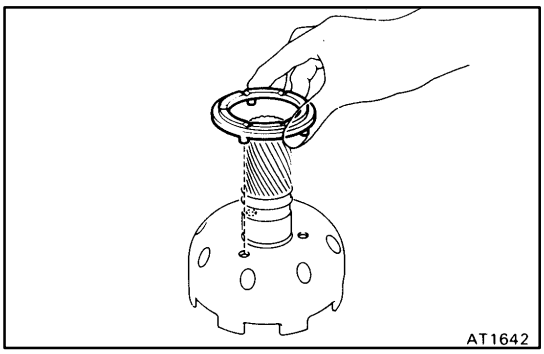

4. INSTALL THRUST WASHER

HINT: Make sure that the lug shapes match the holes on the sun gear input drum.

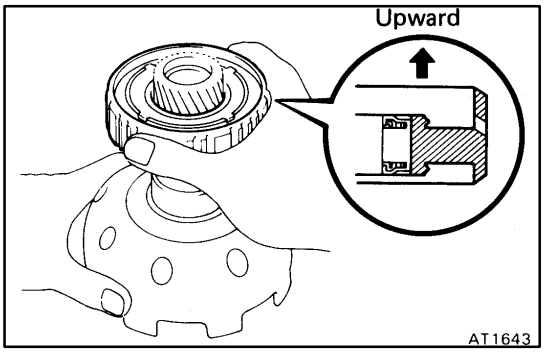

5. INSTALL ASSEMBLED NO.1 ONE-WAY CLUTCH AND SECOND BRAKE HUB ONTO PLANETARY SUN GEAR

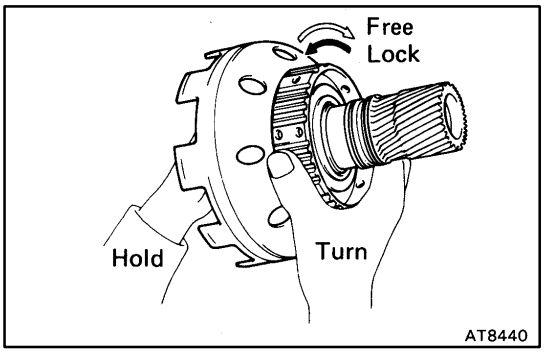

6. CHECK OPERATION OF NO.1 ONE-WAY CLUTCH

Hold the planetary sun gear and turn the second brake hub. Check that the second brake hub must be able to turn freely clockwise and locks counterclockwise.

SECOND BRAKE

AT05Z-05

COMPONENTS

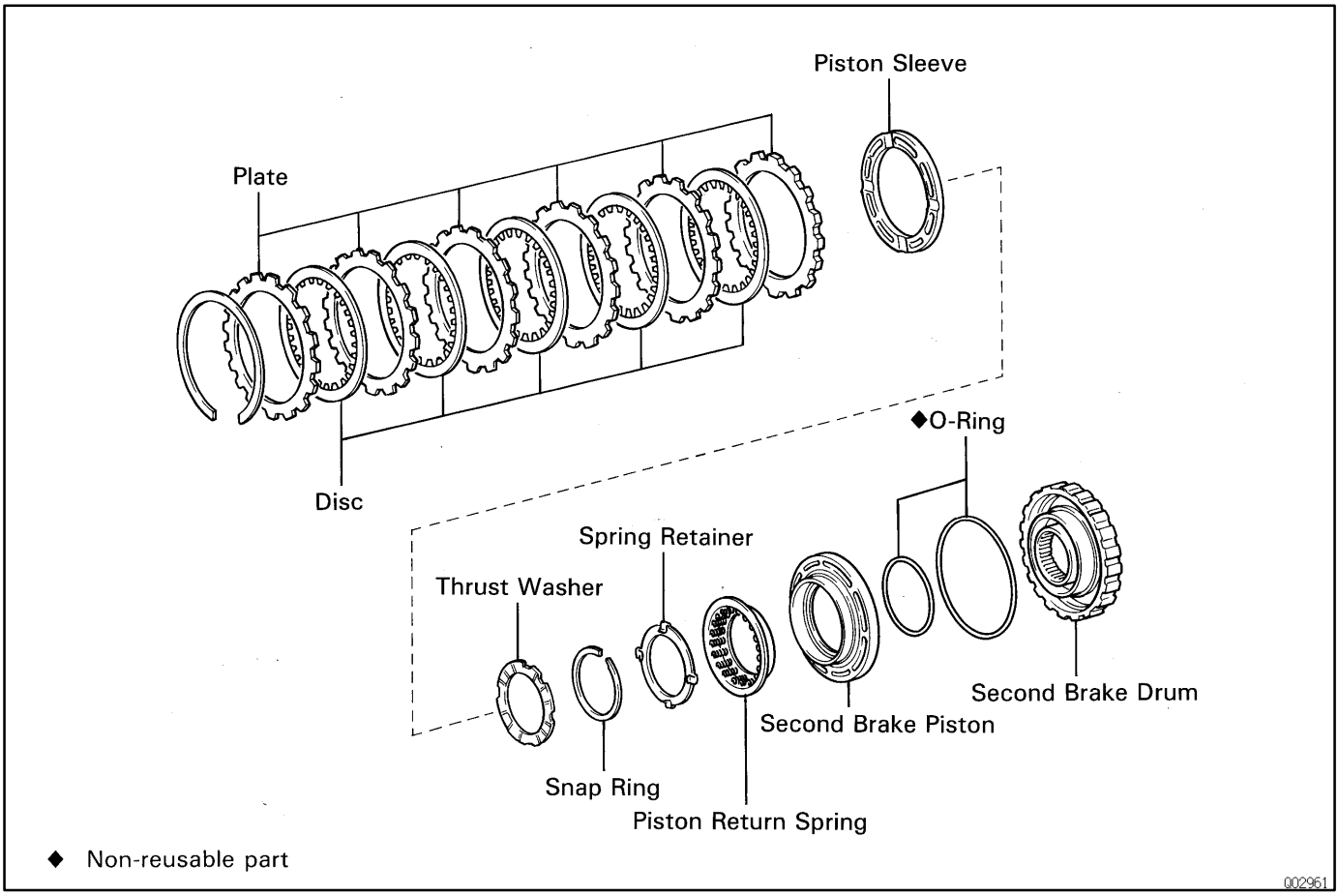

AT060-05

SECOND BRAKE DISASSEMBLY

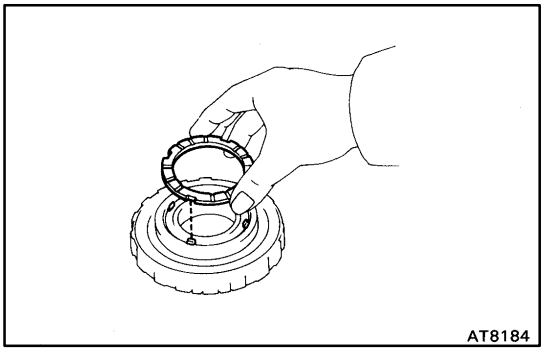

1. REMOVE THRUST WASHER FROM SECOND BRAKE DRUM

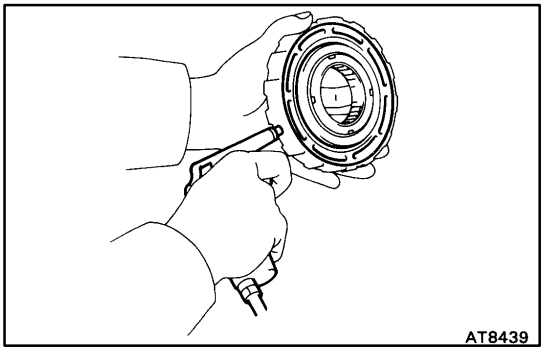

2. CHECK SECOND BRAKE PISTON MOVEMENT

Make sure the second brake piston moves smoothly when applying and releasing low-pressure compressed air to the second brake drum.

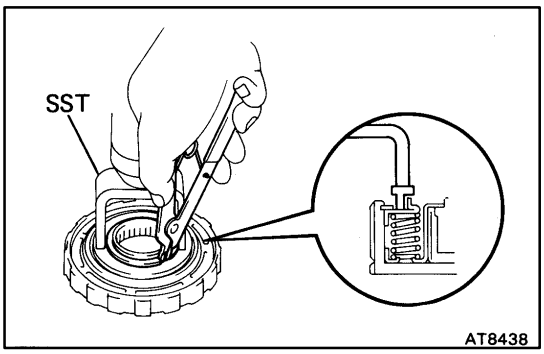

3. REMOVE PISTON RETURN SPRING

(a) Place SST on the spring retainer, and compress the return spring with a shop press.
SST 09350-30020 (09350-07040)

(b) Using snap ring pliers, remove the snap ring.

(c) Remove the spring retainer.

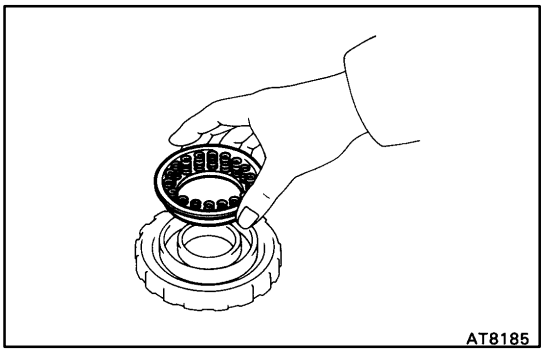

(d) Remove the piston return spring.

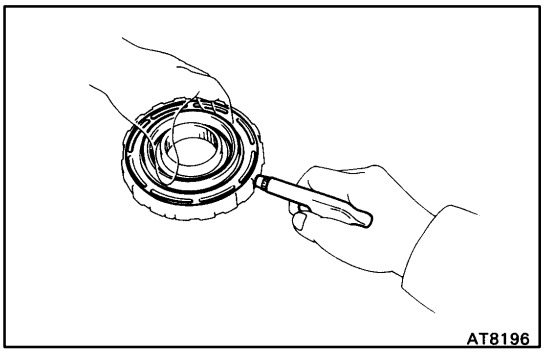

4. REMOVE SECOND BRAKE PISTON

(a) Hold the second brake piston with hand, apply compressed air to the second brake drum to remove the second brake piston.

(b) Remove the second brake piston.
HINT: If the piston is at an angle and cannot be removed, press down on the side jutting out and again apply compressed air, or else wind vinyl tape around the piston end and remove it with needle-nose pliers.

(c) Remove the 2 O-rings from the piston.

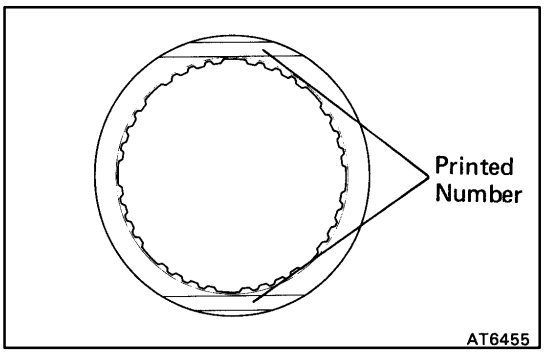

AT061-06

SECOND BRAKE INSPECTION

INSPECT DISC, PLATE AND FLANGE

Check to see if the sliding surface of the disc, plate and flange are worn or burnt. If necessary, replace them.
HINT:

★ If the lining of the disc is peeling off or discolored, or even if a part of the printed numbers are defaced, replace all discs.

★ Before assembling new discs, soak them in ATF for at least 15 minutes.

AT062-03

SECOND BRAKE ASSEMBLY

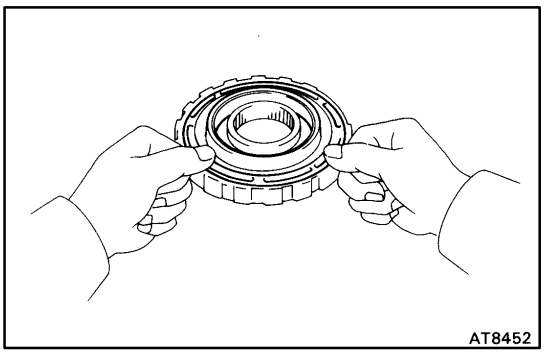

1. INSTALL SECOND BRAKE PISTON

(a) Coat the 2 new O-rings with ATF and install them on second brake piston.

(b) Being careful not to damage the O-rings, press the second brake piston into the second brake drum with both hands.

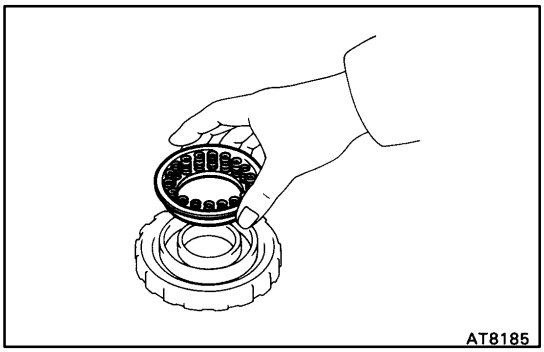

2. INSTALL PISTON RETURN SPRING

(a) Install the piston return spring.

(b) Install the spring retainer.

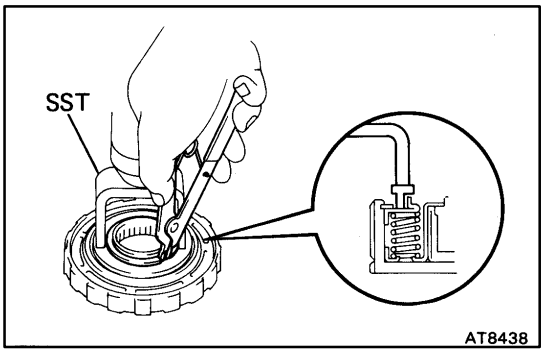

(c) Place SST on the spring retainer, and compress the return spring with a shop press.
SST 09350-30020 (09350-07040)

(d) Using snap ring pliers, install the snap ring.

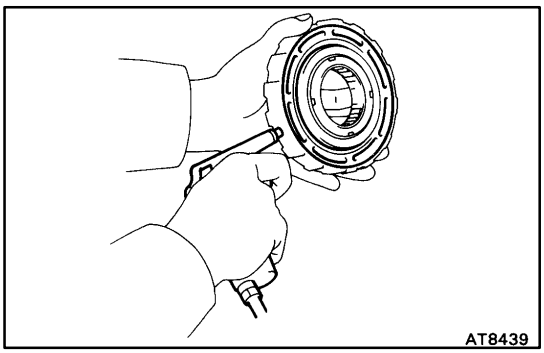

3. CHECK SECOND BRAKE PISTON MOVEMENT

Make sure the second brake piston moves smoothly when applying and releasing low-pressure compressed air to the second brake drum.

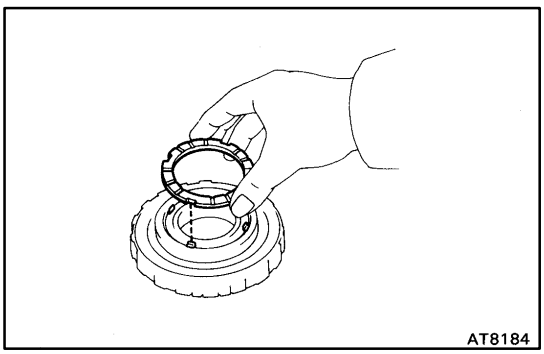

4. INSTALL THRUST WASHER

Coat the thrust washer with petroleum jelly and install it.
HINT: Make sure that the cutout portions of thrust washer match teeth of the spring retainer.

FIRST AND REVERSE BRAKE

AT063-05

COMPONENTS

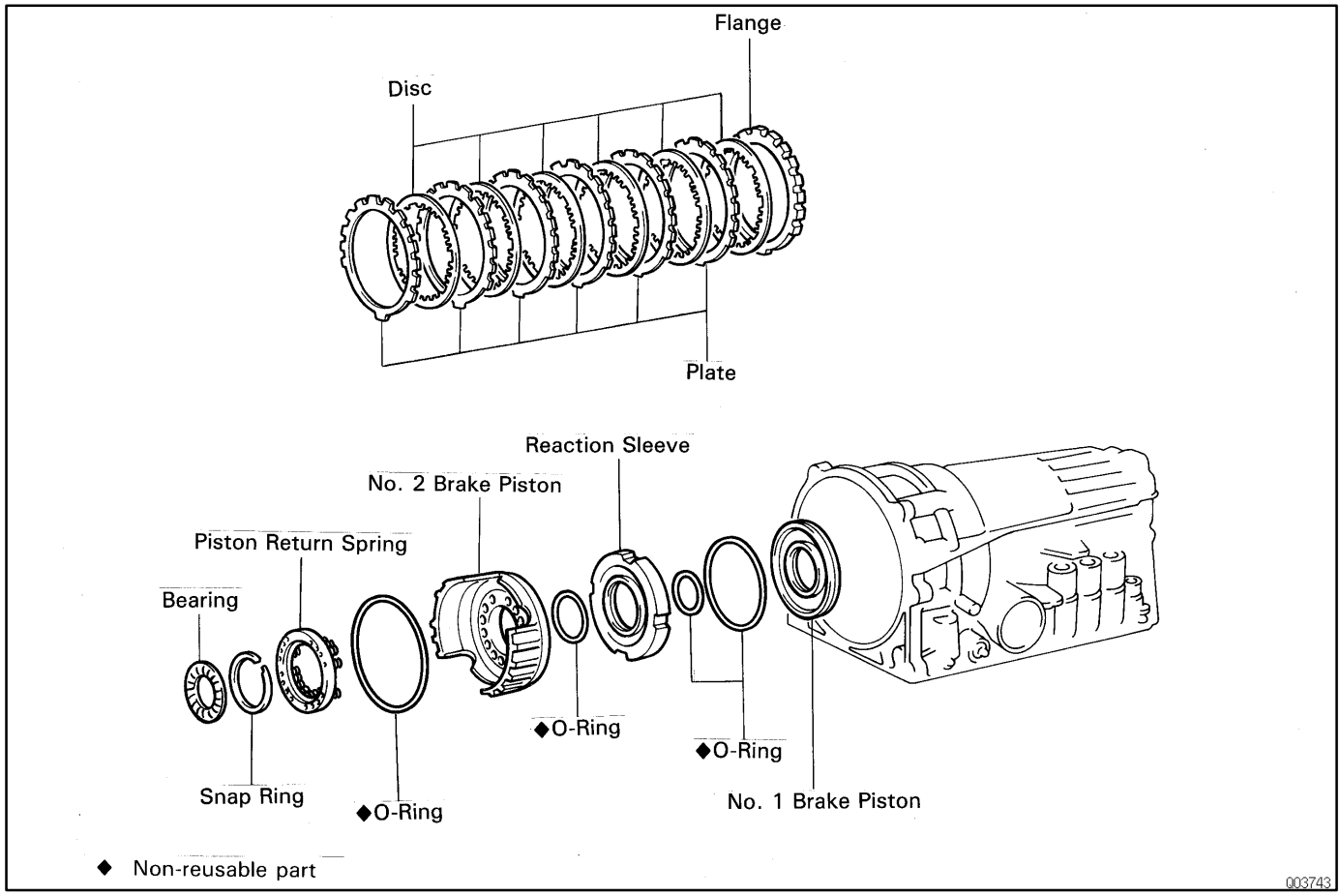

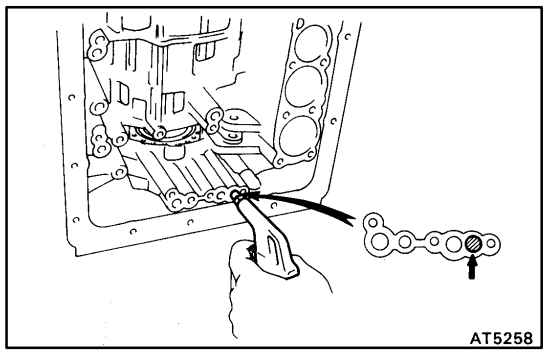

AT0CB-02

FIRST AND REVERSE BRAKE DISASSEMBLY

1. CHECK PISTON STROKE OF FIRST AND REVERSE BRAKE

Make sure the first and reverse brake pistons move smoothly when applying and releasing the compressed air into the transmission case.

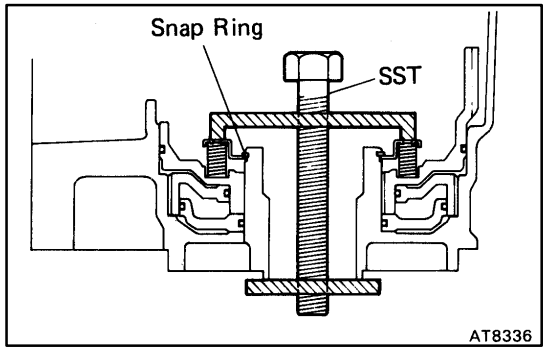

2. REMOVE PISTON RETURN SPRING

(a) Place SST on the spring retainer and compress the return spring.
SST 09350-30020 (09350-07050)

(b) Using SST, remove the snap ring.
SST 09350-30020 (09350-07070)

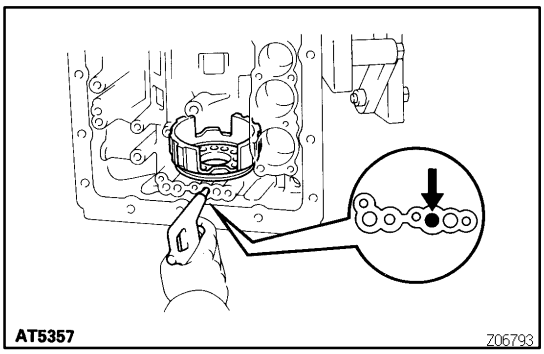

3. REMOVE NO.2 BRAKE PISTON

(a) Hold No.2 brake piston with hand, apply compressed air to transmission case to remove No.2 brake piston.
HINT: If the piston does not pop out with compressed air, lift the piston out with needle-nose pliers.

(b) Remove the O-ring from No.2 brake piston.

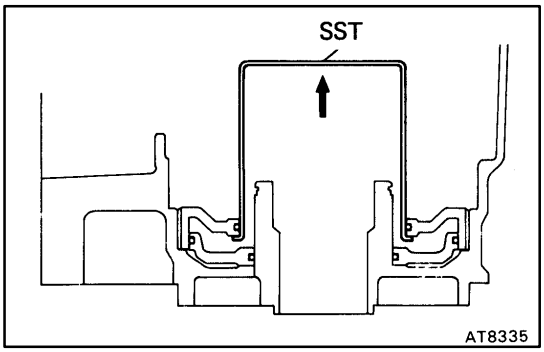

4. REMOVE REACTION SLEEVE

(a) Using SST, remove the reaction sleeve.
SST 09350-30020 (09350-07080)

(b) Remove the O-ring from the reaction sleeve.

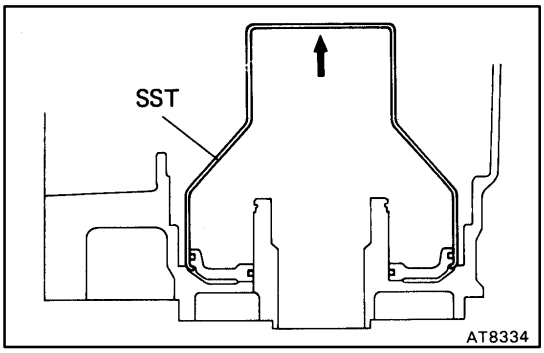

5. REMOVE NO.1 BRAKE PISTON

(a) Using SST, remove the No.1 brake piston.
SST 09350-30020 (09350-07090)

(b) Remove 2 O-rings from the No.1 piston.

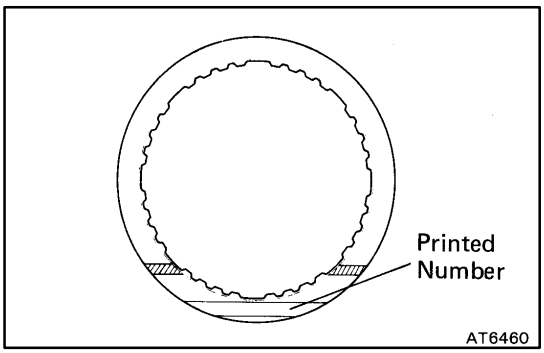

FIRST AND REVERSE BRAKE INSPECTION AT0CC-02

1. INSPECT DISC, PLATE AND FLANGE

Check to see if the sliding surface of the disc, plate and flange are worn or burnt. If necessary, replace them.
HINT:

★ If the lining of the disc is peeling off or discolored or even if a part of the printed numbers are defaced, replace all discs.

★ Before assembling new discs, soak them in ATF for at least 15 minutes.

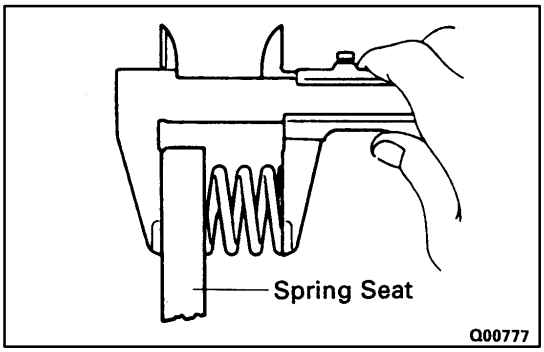

2. CHECK PISTON RETURN SPRING

Check the return spring free length together with the spring seat.

Standard free length:

12.9 mm (0.508 in.)

AT0CD-02

FIRST AND REVERSE BRAKE PISTON ASSEMBLY

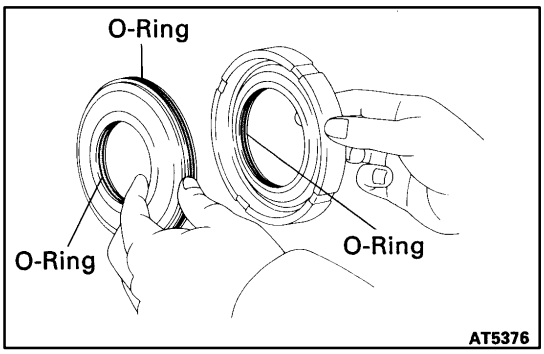

1. INSTALL NO.1 BRAKE PISTON

(a) Coat the 3 new O-rings with ATF.
(b) Install the 2 O-rings on No.1 brake piston.
(c) Install the O-ring on the reaction sleeve.
(d) Install the No.1 brake piston on the reaction sleeve.

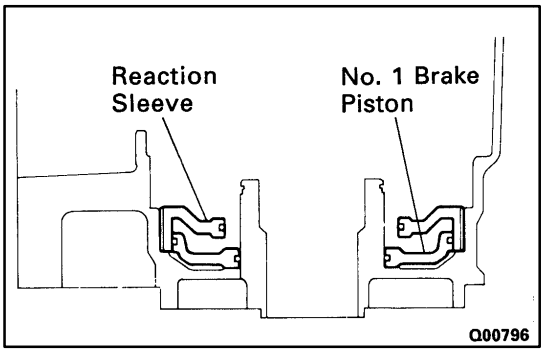

2. INSTALL REACTION SLEEVE AND NO.1 BRAKE PISTON TO TRANSMISSION CASE

With the No.1 brake piston underneath (the rear side), install the brake reaction sleeve and No.1 brake piston to the transmission case.

NOTICE: Be careful not to damage the O-rings.

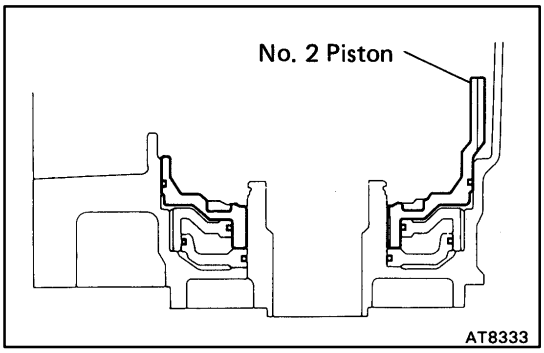

3. INSTALL NO.2 BRAKE PISTON

(a) Coat the new O-ring with ATF.
(b) Install the O-ring on No.2 brake piston.
(c) With the spring seat of the piston upwards (the front side), place the piston in the transmission case.

NOTICE: Be careful not to damage the O-rings.

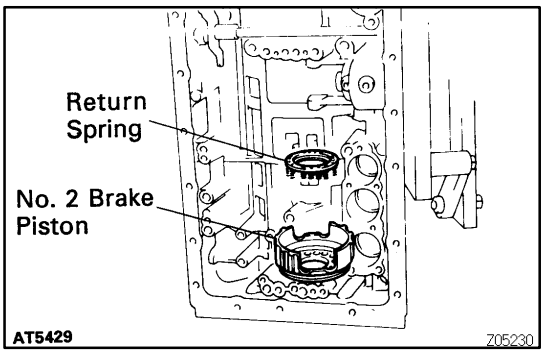

(d) Place the piston return spring onto the No.2 brake piston.

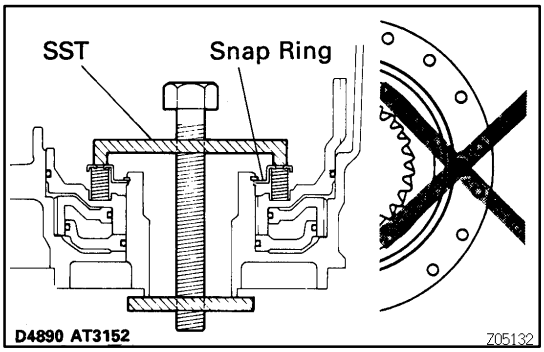

4. INSTALL PISTON RETURN SPRING

(a) Place SST on the spring retainer and compress the return spring.
SST 09350-30020 (09350-07050)
(b) Using SST, install the snap ring.
SST 09350-30020 (09350-07070)

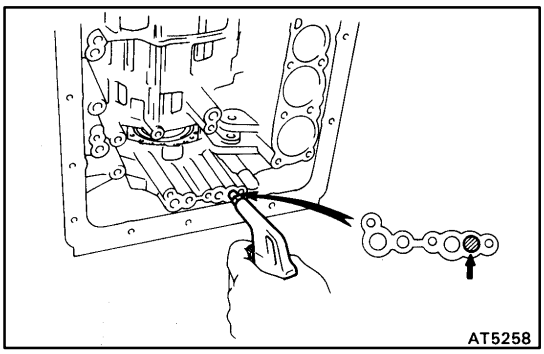

5. CHECK PISTON STROKE OF FIRST AND REVERSE BRAKE

Make sure the first and reverse brake pistons move smoothly when applying and releasing the compressed air into the transmission case.

REAR PLANETARY GEAR

AT065-03

COMPONENTS

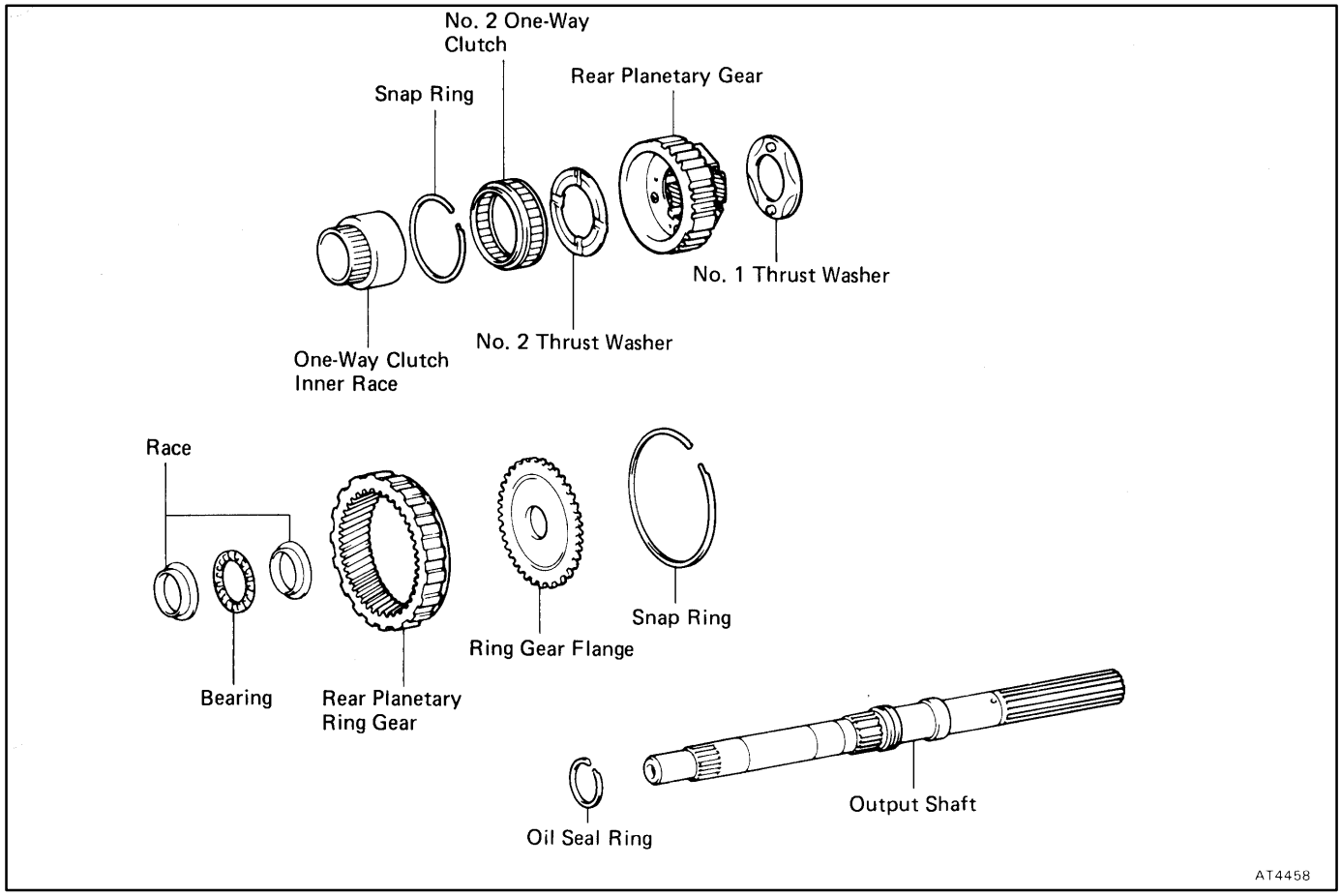

AT066-05

REAR PLANETARY GEAR, NO.2 ONE-WAY CLUTCH AND OUTPUT SHAFT DISASSEMBLY

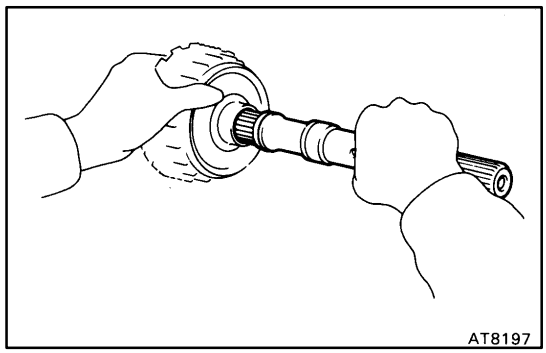

1. REMOVE OUTPUT SHAFT FROM REAR PLANETARY GEAR ASSEMBLY

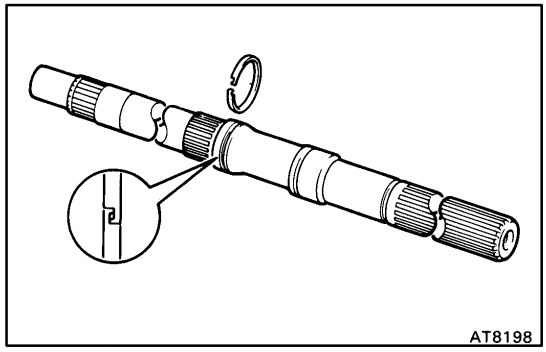

2. REMOVE OIL SEAL RING FROM OUTPUT SHAFT

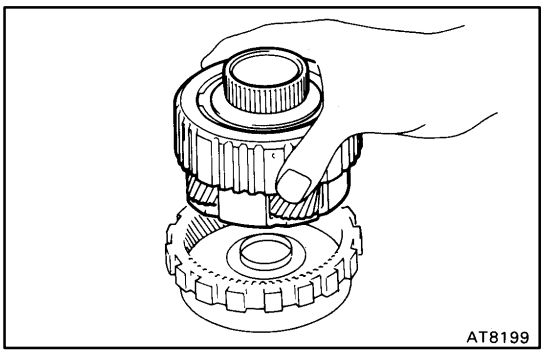

3. REMOVE REAR PLANETARY GEAR FROM REAR PLANETARY RING GEAR

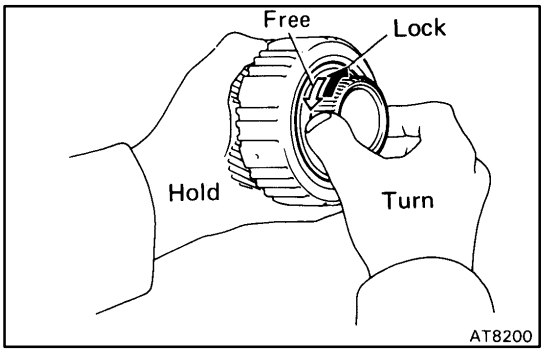

4. CHECK OPERATION OF NO.2 ONE-WAY CLUTCH

Hold the planetary gear and turn the one-way clutch inner race. Check that the one-way clutch inner race must be able to turn freely counterclockwise and locks clockwise.

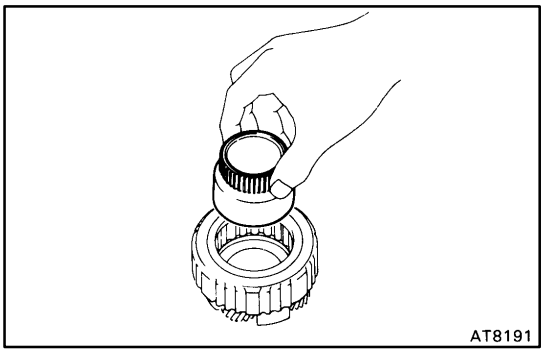

5. REMOVE NO.2 ONE-WAY CLUTCH

(a) Remove the one-way clutch inner race from the rear planetary gear.

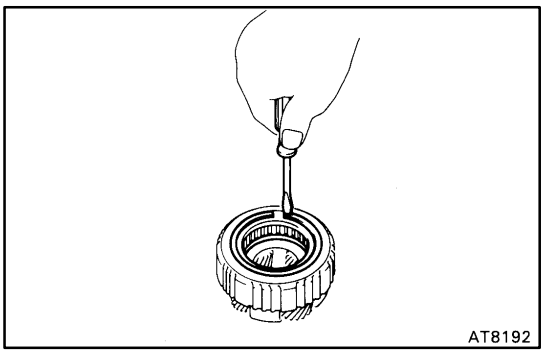

(b) Remove the snap ring with a screwdriver.

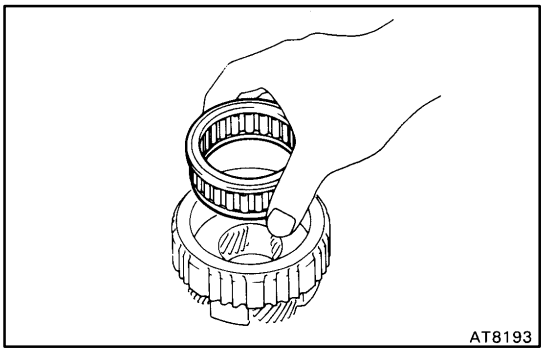

(c) Remove the No.2 one-way clutch with retainers from the planetary gear.

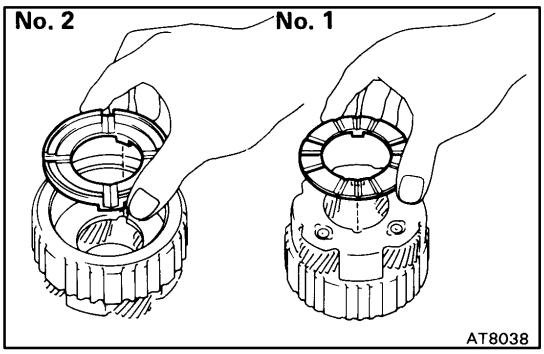

6. REMOVE NO.2 AND NO.1 THRUST WASHERS

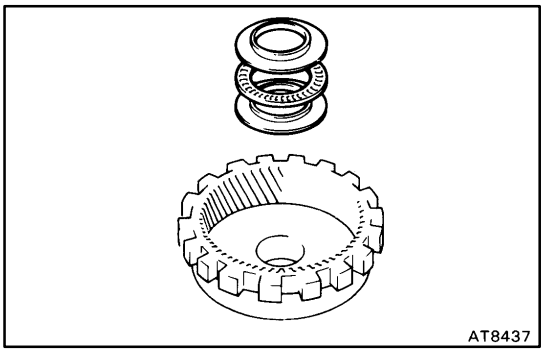

7. REMOVE RACES AND BEARING FROM REAR PLANETARY RING GEAR

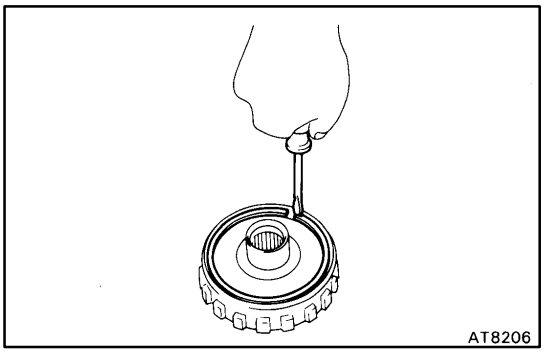

8. REMOVE RING GEAR FLANGE

(a) Remove the snap ring with a screwdriver.

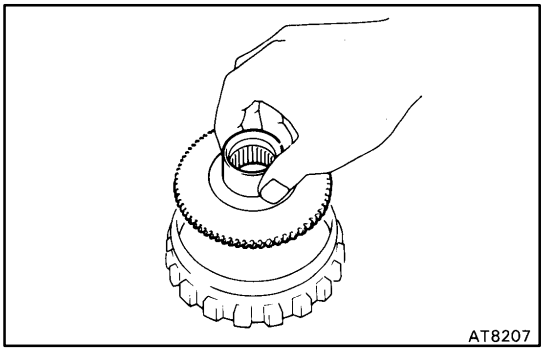

(b) Remove the ring gear flange.

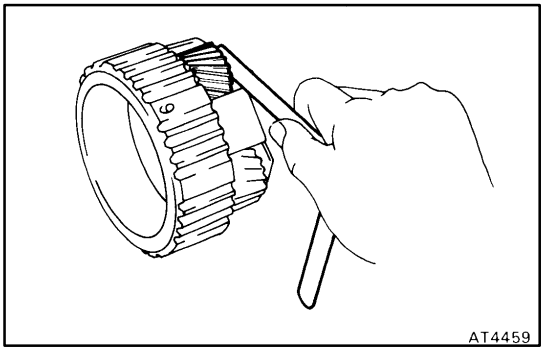

REAR PLANETARY GEAR INSPECTION

AT067-04

MEASURE PLANETARY PINION GEAR THRUST CLEARANCE

Using a feeler gauge, measure the planetary pinion gear thrust clearance.

Standard clearance:

0.20-0.60 mm (0.0079-0.0236 in.)

Maximum clearance:

1.00 mm (0.0394 in.)

If the clearance is greater than the maximum, replace the planetary gear assembly.

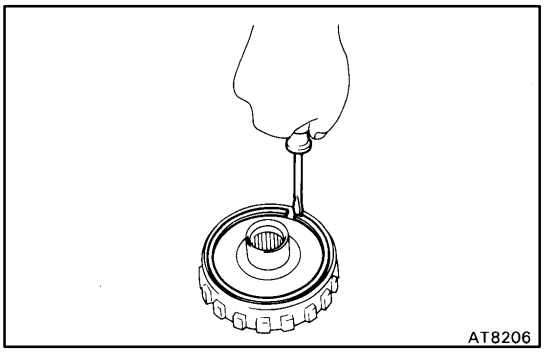

AT068-07

REAR PLANETARY GEAR, NO.2 ONE-WAY CLUTCH AND OUTPUT SHAFT ASSEMBLY

1. INSTALL RING GEAR FLANGE

(a) Install the ring gear flange.

(b) Using a screwdriver, install the snap ring.

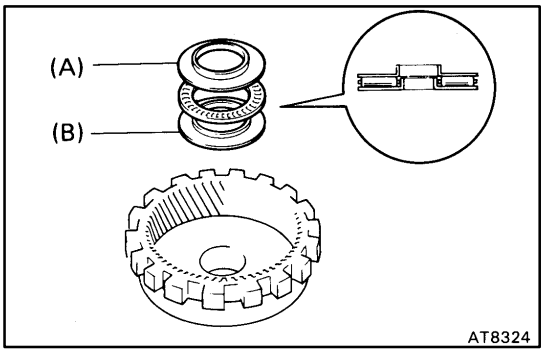

2. INSTALL RACES AND BEARING

Coat the races and bearing with petroleum jelly, and install them onto the rear planetary ring gear.

Races and bearing diameter

mm (in.)

	Inside	Out side
Race (A)	28.8 (1.134)	44.8 (1.764)
Bearing	30.1 (1.185)	44.7 (1.760)
Race (B)	27.8 (1.094)	44.8 (1.764)

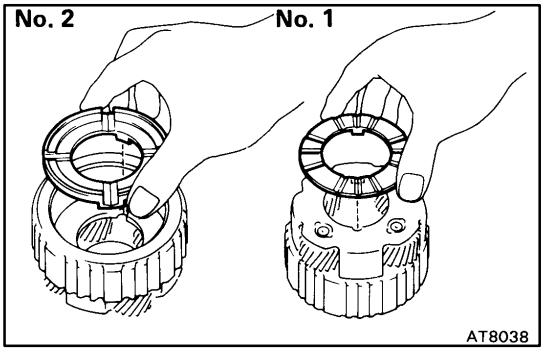

3. INSTALL NO.1 AND NO.2 THRUST WASHERS

(a) Coat the thrust washers with petroleum jelly.

(b) Install the thrust washers onto both sides of the rear planetary gear.

HINT: Make sure that the lug shapes match the cutout portions on the rear planetary gear.

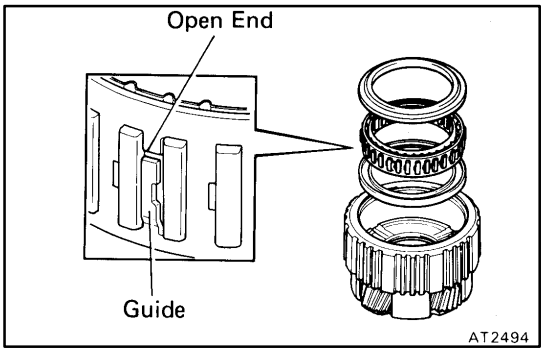

4. INSTALL NO.2 ONE-WAY CLUTCH

(a) Install the one-way clutch and 2 retainers into the rear planetary gear.

HINT: Make sure that the open ends of the guides on the one-way clutch are faced upward.

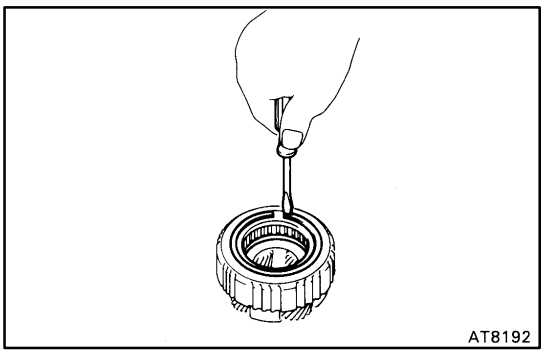

(b) Using a screwdriver, install the snap ring.

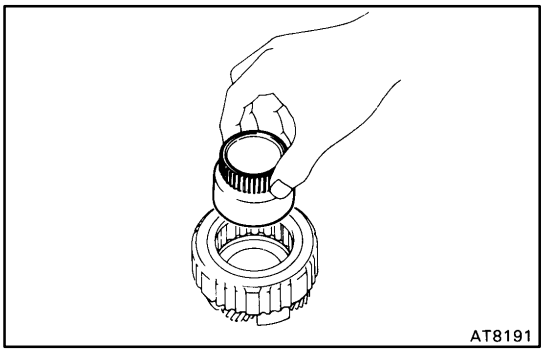

(c) While turning counterclockwise, install the one- way clutch inner race to rear planetary gear.

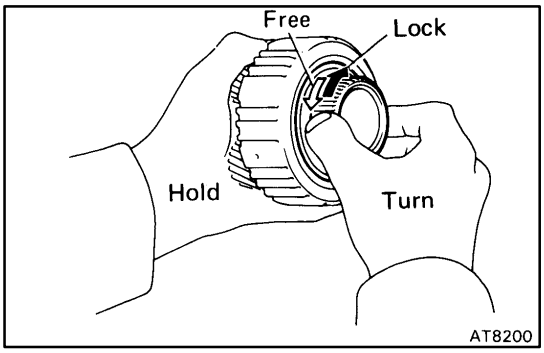

5. CHECK OPERATION OF NO.2 ONE-WAY CLUTCH

Hold the planetary gear and turn the one-way clutch inner race. Check that the one-way clutch inner race must be able to turn freely counterclockwise and locks clockwise.

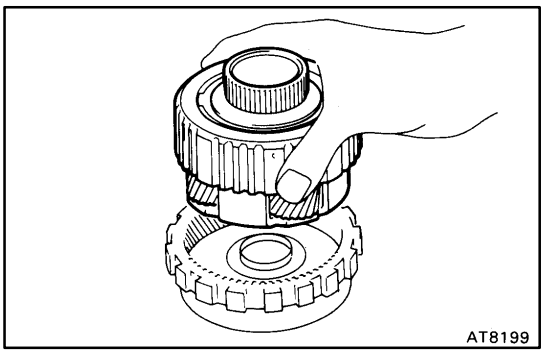

6. INSTALL REAR PLANETARY GEAR ONTO REAR PLANETARY RING GEAR

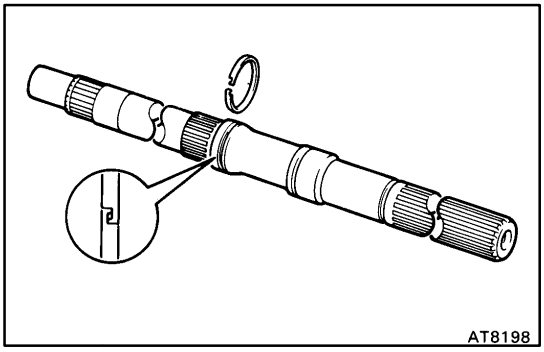

7. INSTALL OIL SEAL RING

Coat the oil seal ring with ATF and install it to the output shaft.

NOTICE: Do not spread the ring ends too match.

HINT: After installing the oil seal ring, check that it rotates smoothly.

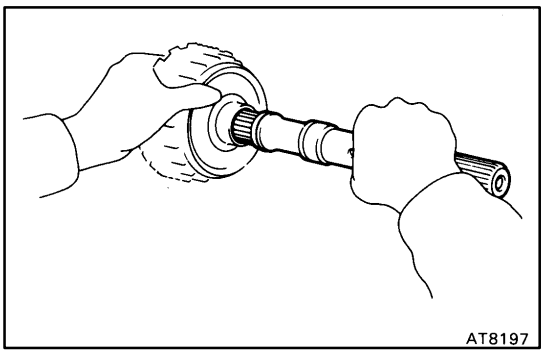

8. INSTALL OUTPUT SHAFT INTO REAR PLANETARY GEAR ASSEMBLY

VALVE BODY
COMPONENTS

AT069-03

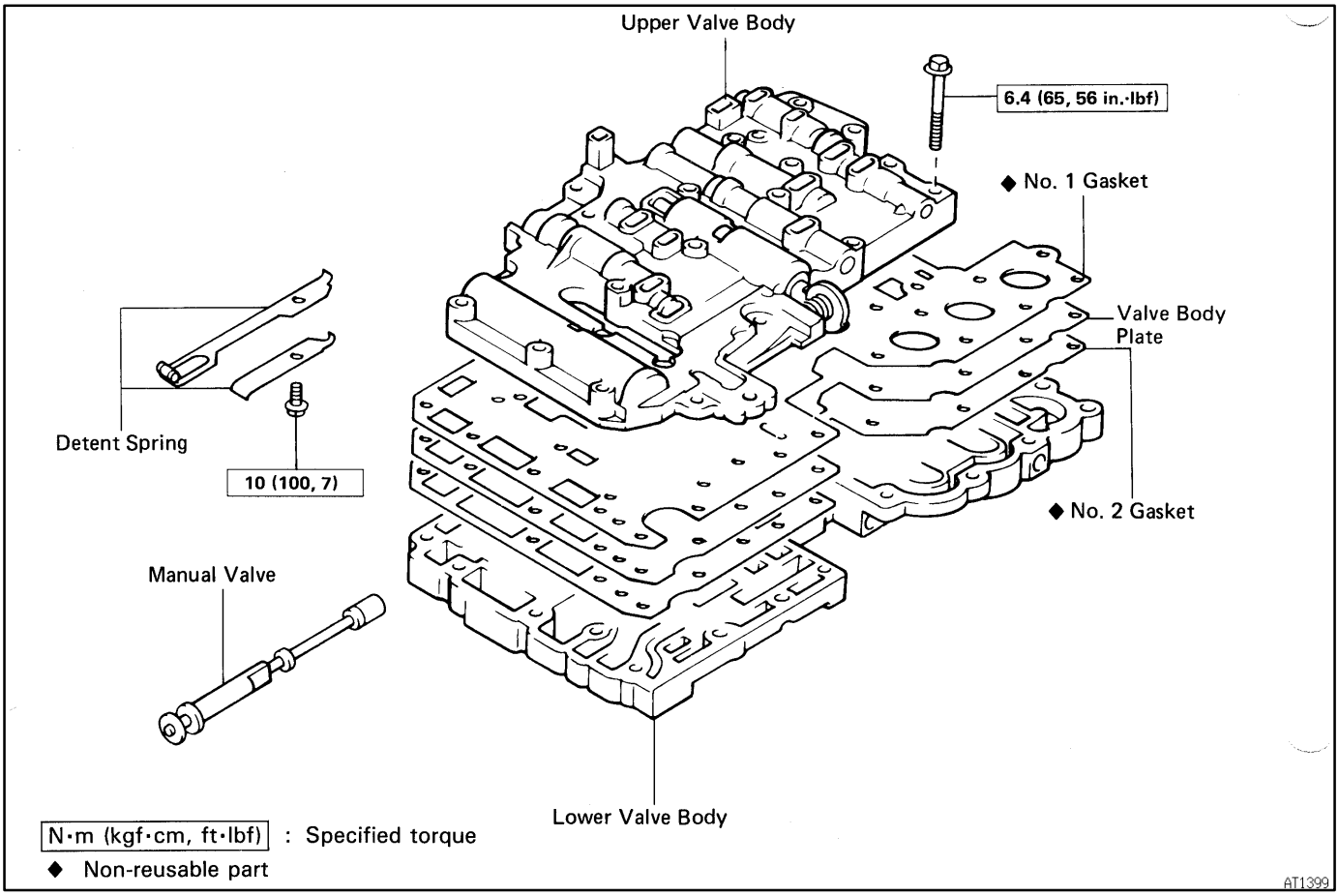

AT0SJ-01

VALVE BODY DISASSEMBLY

1. UNBOLT AND REMOVE DETENT SPRING

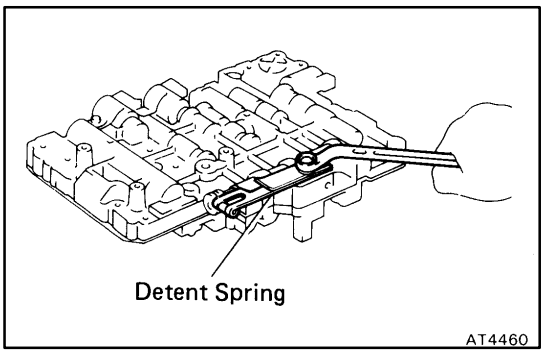

2. REMOVE MANUAL VALVE

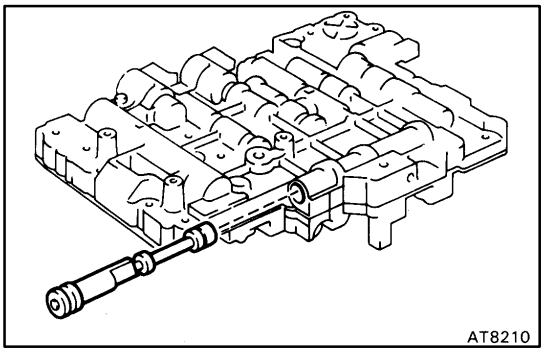

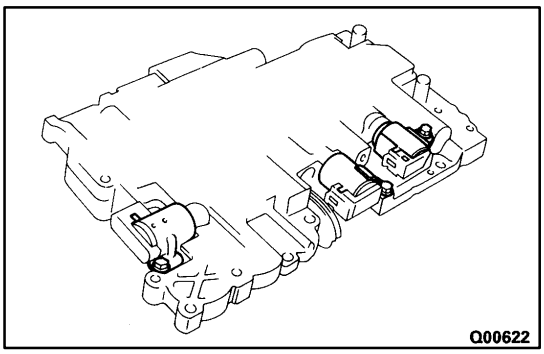

3. REMOVE 3 SOLENOIDS

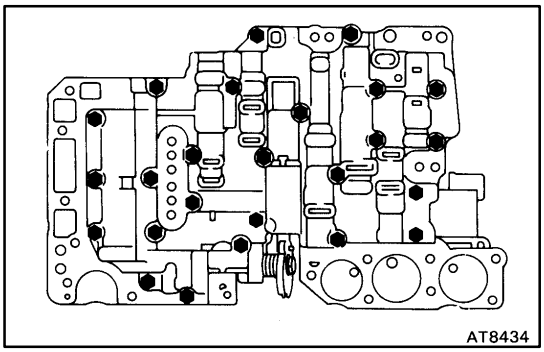

4. TURN OVER ASSEMBLY AND REMOVE 25 BOLTS

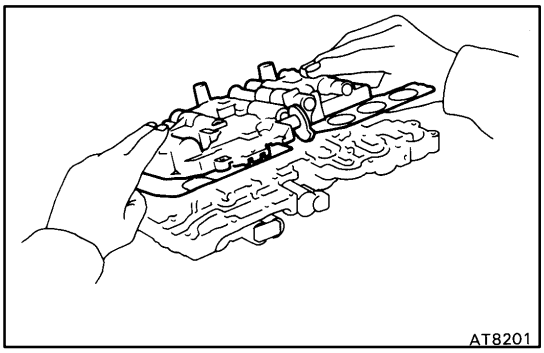

4. LIFT OFF UPPER VALVE BODY AND PLATE AS A SINGLE UNIT

Hold the valve body plate to the upper valve body.

HINT: Be careful that the check balls and strainer do not fall out.

AT0SK-01

VALVE BODY ASSEMBLY

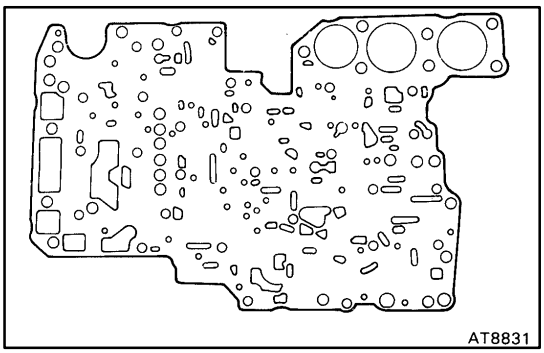

1. POSITION NEW NO.1 GASKET ON UPPER VALVE BODY

Align a new No.1 gasket at each bolt hole.

2. POSITION VALVE BODY PLATE ON NO.1 GASKET

Align the plate at each bolt hole.

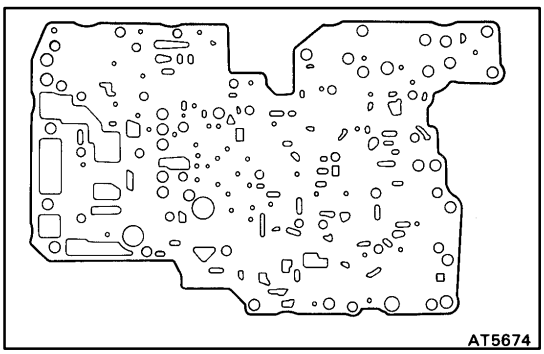

3. POSITION NEW NO.2 GASKET ON PLATE

Align a new No.2 gasket at each bolt hole.

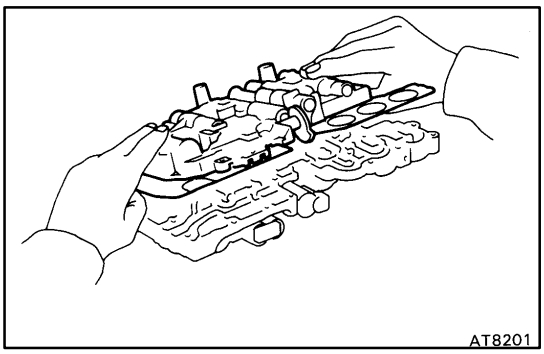

4. PLACE UPPER VALVE BODY WITH PLATE AND GASKETS ON TOP OF LOWER VALVE BODY

Align each bolt hole and gasket in the valve body.

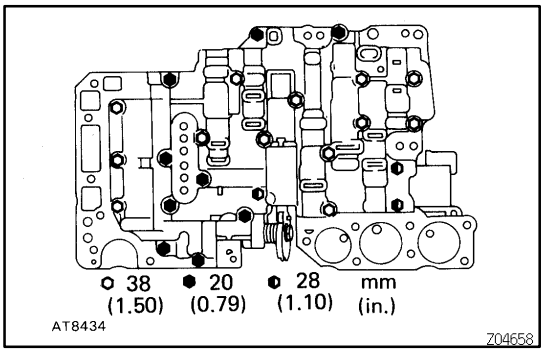

5. INSTALL 25 BOLTS TO UPPER VALVE BODY

HINT: Each bolt length is indicated in the illustration.

Torque: 6.4 N·m (65 kgf·cm, 56 in.·lbf)

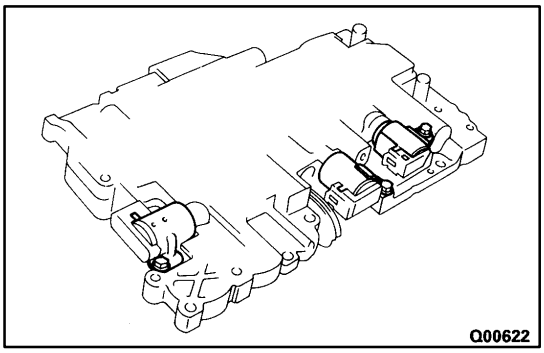

6. INSTALL 3 SOLENOIDS

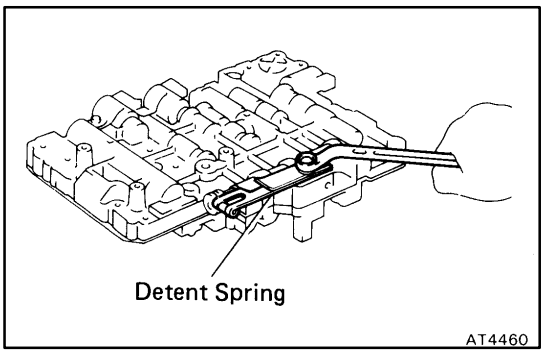

7. INSTALL MANUAL VALVE

8. INSTALL DETENT SPRING

Torque: 10 N·m (100 kgf·cm, 7 ft·lbf)

9. MAKE SURE MANUAL VALVE MOVES SMOOTHLY

UPPER VALVE BODY

AT06C-03

COMPONENTS

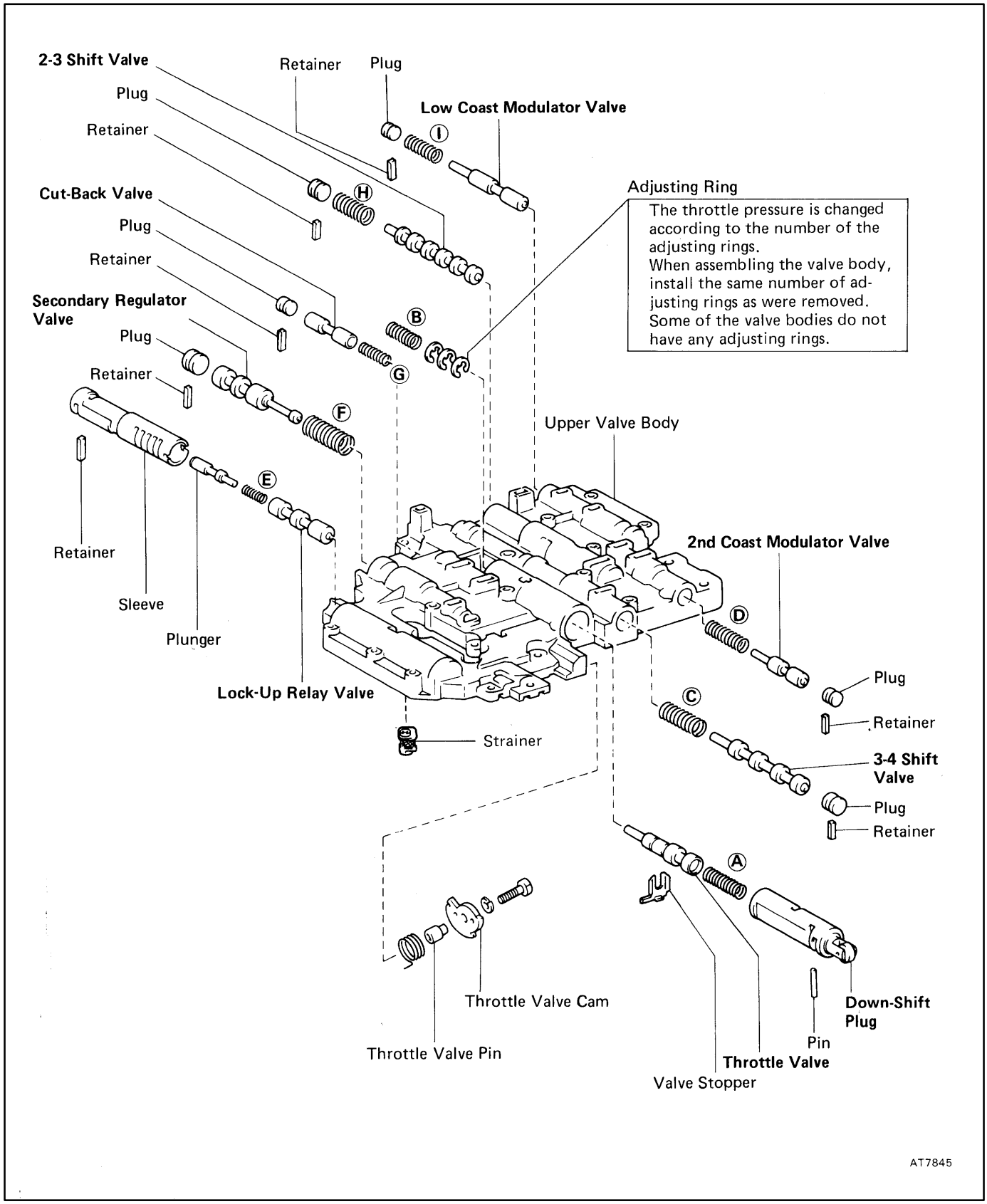

AT06D-04

VALVE BODY SPRING SPECIFICATIONS

HINT: During reassembly please refer to the spring specifications below to help you to identify the different springs.

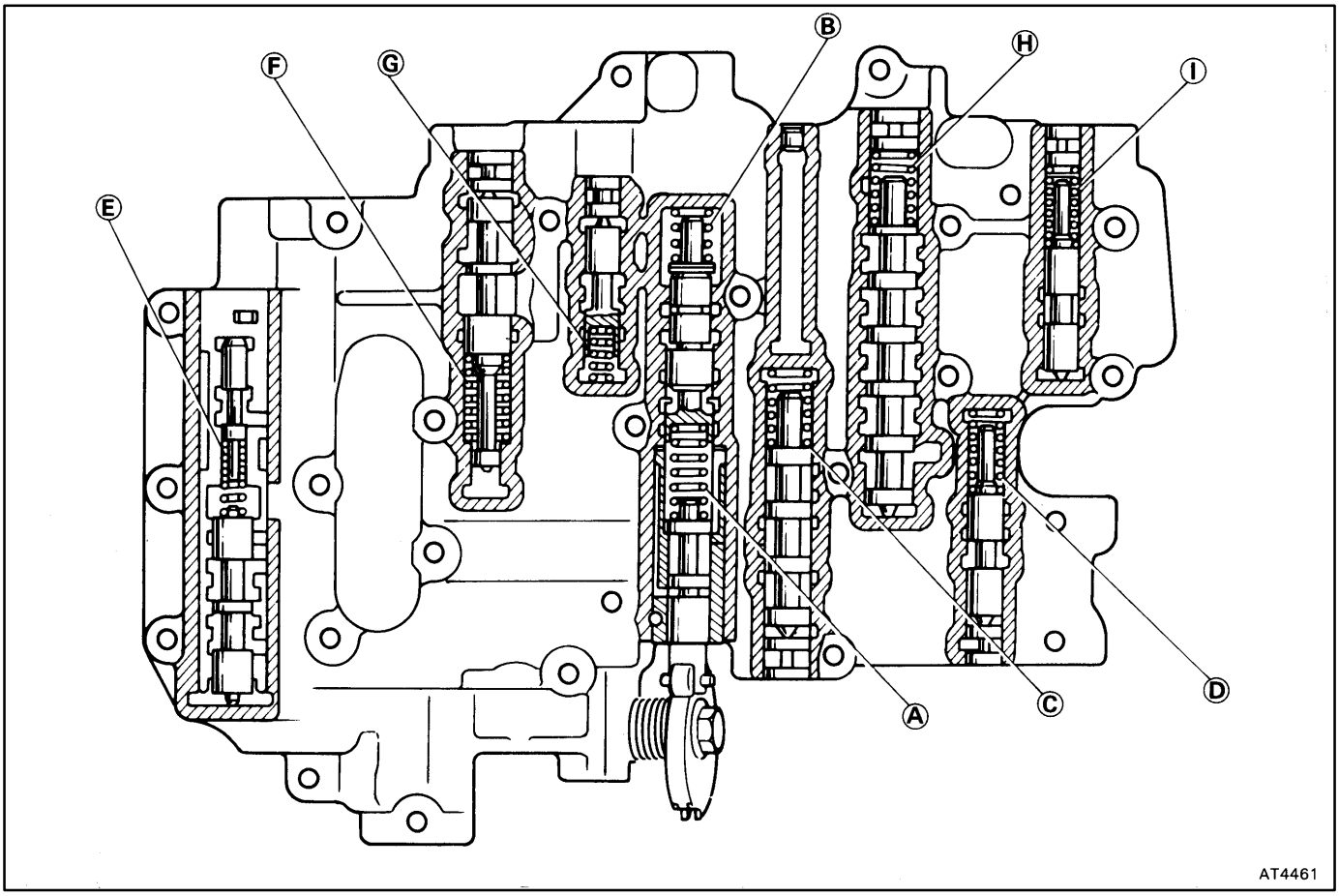

Mark	Name (color)	Free length / Outer diameter mm (in.)	Total No. of coils
(A)	Down-shift plug (Yellow)	27.3 (1.075) / 8.7 (0.343)	12.5
(B)	Throttle valve (Blue)	20.6 (0.811) / 9.2 (0.362)	9.5
	(White)	or 23.3 (0.917) / 9.2 (0.362)	9.5
(C)	3-4 shift valve (Purple)	30.8 (1.213) / 9.7 (0.382)	10.5
(D)	SUPRA, PREVIA Second coast modulator valve (Orange)	24.6 (0.967) / 8.3 (0.327)	9.0
(D)	OTHERS Second coast modulator valve (Orange)	25.3 (0.996) / 8.6 (0.339)	9.5
(E)	Lock-up relay valve (Light Gray)	21.4 (0.843) / 5.5 (0.217)	17.5
(F)	Secondary regulator valve (Blue)	30.9 (1.217) / 11.2 (0.441)	10.5
(G)	Cut-back valve (Red)	21.8 (0.858) / 6.0 (0.236)	13.5
(H)	2-3 Shift valve (Blue)	30.8 (1.213) / 9.7 (0.382)	10.5
(I)	SUPRA, PREVIA Low coast modulator valve (Yellow)	26.4 (1.039) / 8.3 (0.327)	10.5
(I)	OTHERS Low coast modulator valve (Yellow)	30.4 (1.197) / 8.3 (0.327)	8.5

AT06E-05

RETAINERS, PIN, STOPPER, CHECK BALLS AND STRAINER LOCATION

1. RETAINER, STOPPER AND PIN

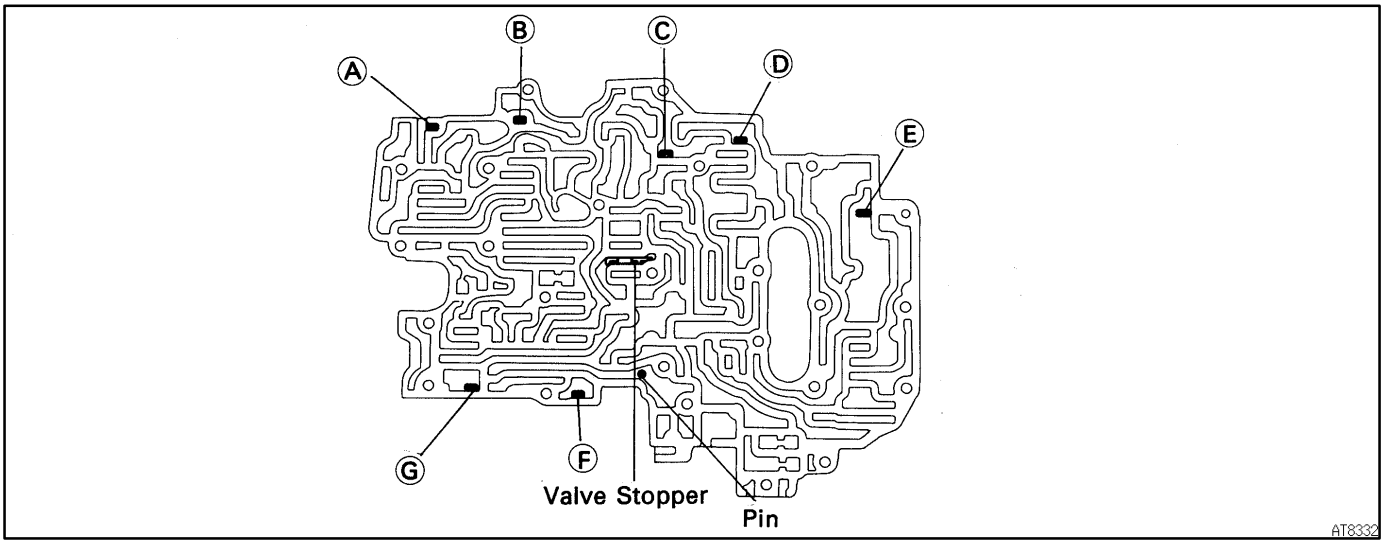

Mark	Retainer	Height / Width / Thickness mm (in.)
(A)	Low coast modulator valve	14.5 (0.571) / 5.0 (0.197) / 3.2 (0.126)
(B)	2-3 shift valve	14.0 (0.551) / 5.0 (0.197) / 3.2 (0.126)
(C)	Cut-back valve	15.0 (0.591) / 5.0 (0.197) / 3.2 (0.126)
(D)	Secondary regulator valve	14.0 (0.551) / 5.0 (0.197) / 3.2 (0.126)
(E)	Lock-up relay valve	21.2 (0.835) / 5.0 (0.197) / 3.2 (0.126)
(F)	3-4 shift valve	16.5 (0.650) / 6.0 (0.236) / 3.2 (0.126)
(G)	2nd coast modulator valve	16.5 (0.650) / 6.0 (0.236) / 3.2 (0.126)

2. CHECK BALL

SUPRA

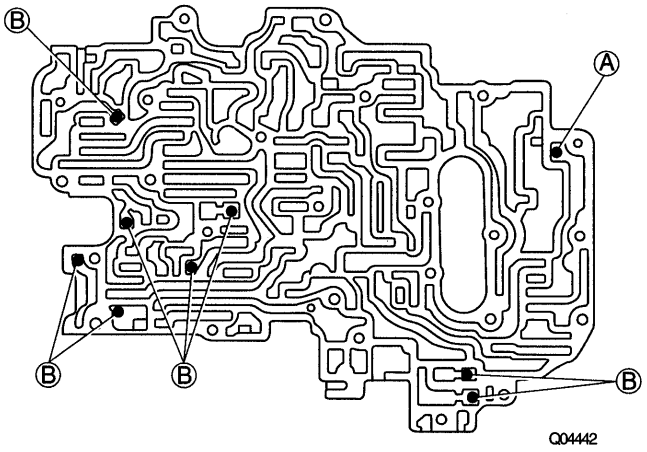

TRUCK
4RUNNER
TOYOTA T100

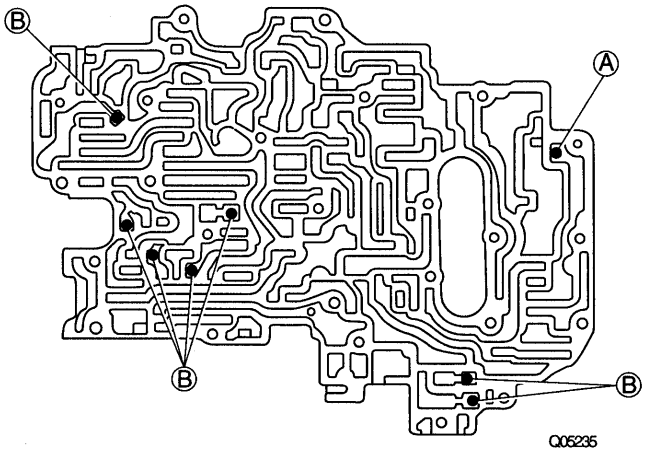

PREVIA

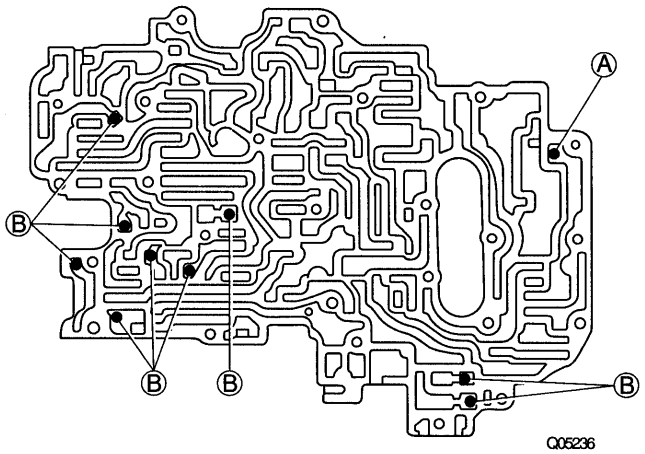

Y

Z11792

Mark	Check ball	Diameter mm (in.)
(A)	Rubber ball	6.35 (0.2500)
(B)	Rubber ball	5.45 (0.2181)

3. STRAINER

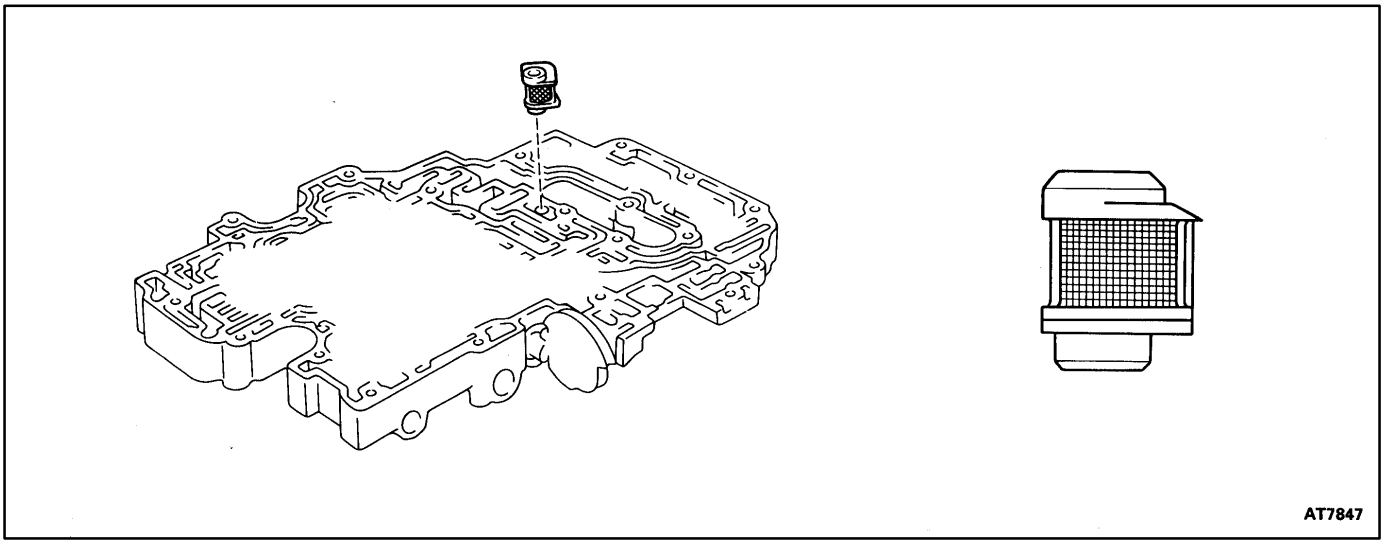

LOWER VALVE BODY

AT06F-03

COMPONENTS

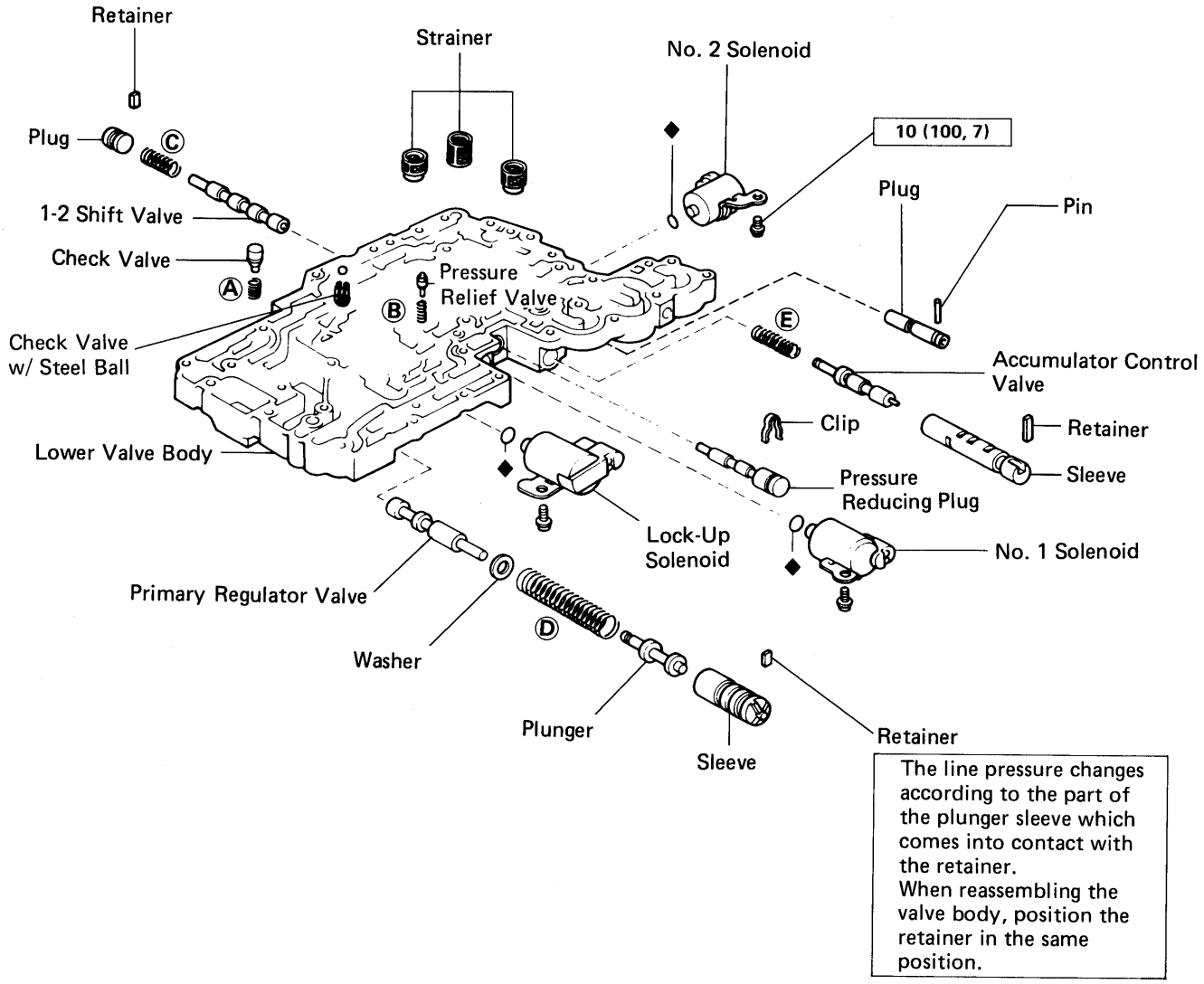

N·m (kgf·cm, ft·lbf) : Specified torque

◆ Non-reusable part

AT5886

AT06G-04

VALVE BODY SPRING SPECIFICATIONS

HINT: During reassembly please refer to the spring specifications below to help you to identify the different springs.

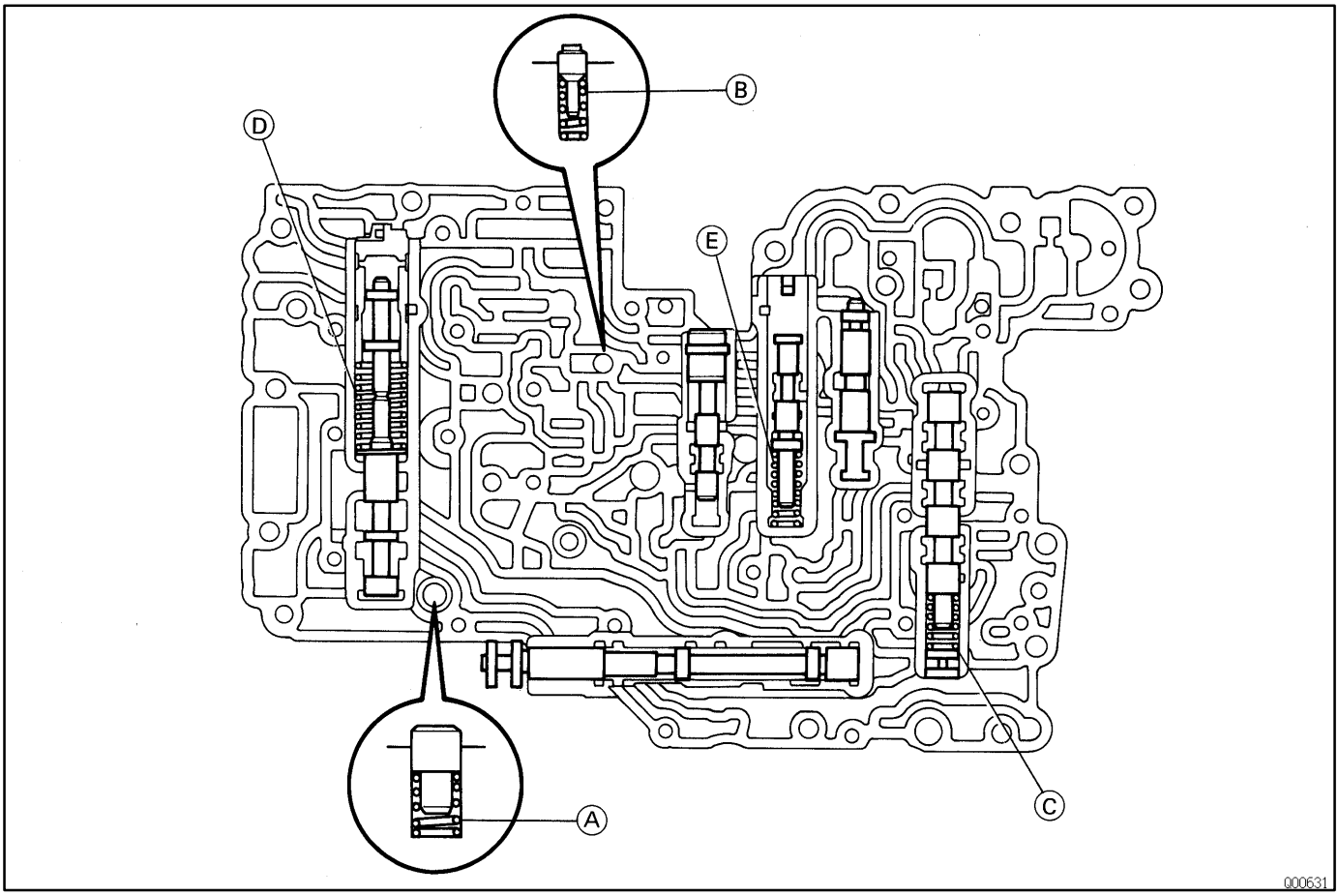

Mark	Name (Color)	Free length / Outer diameter mm (in.)	Total No. of coils
(A)	Check valve (None)	20.2 (0.796) / 12.1 (0.476)	6.5
(B)	Pressure relief valve (None)	11.2 (0.441) / 6.4 (0.252)	7.5
(C)	1-2 shift valve (Purple)	30.8 (1.213) / 9.7 (0.382)	10.5
(D)	Primary regulator valve (Purple)	62.3 (2.453) / 18.6 (0.732)	12.5
(E)	SUPRA Accumulator control valve (White)	36.1 (1.421) / 8.9 (0.327)	14.0
(E)	OTHERS Accumulator control valve (Pink)	33.9 (1.335) / 8.8 (0.346)	12.0

AT06H-06

RETAINERS, CLIP, CHECK BALLS, STRAINERS, SPRINGS AND VALVES LOCATION

1. RETAINER AND CLIP

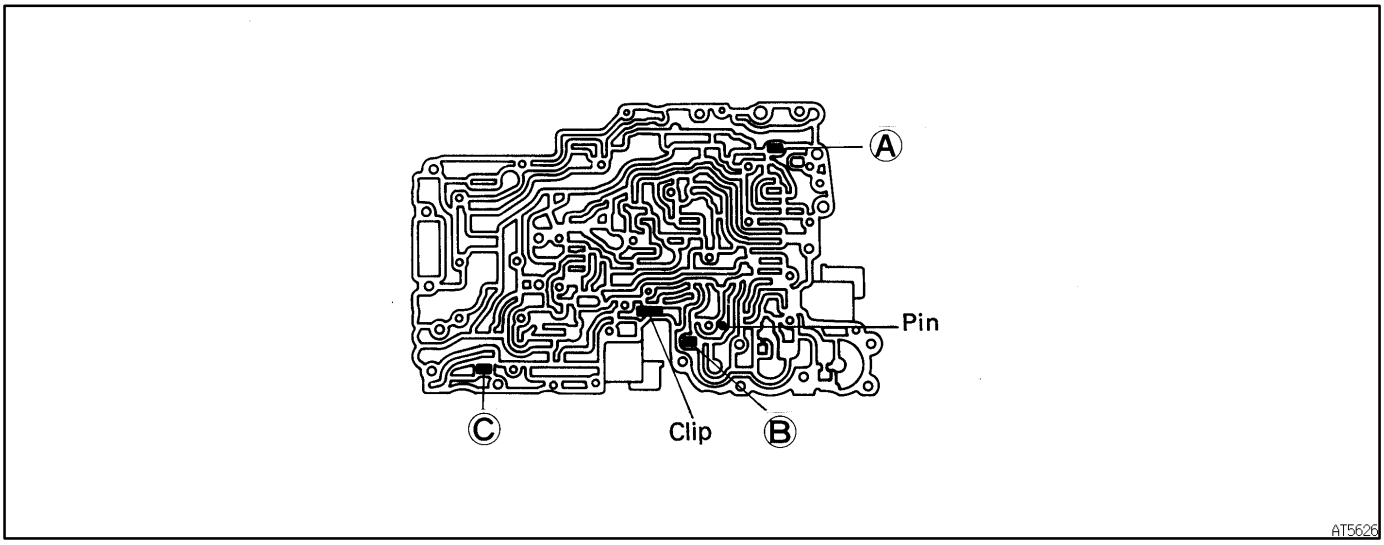

Mark	Retainer	Height / Width / Thickness mm (in.)
(A)	1-2 shift valve	16.5 (0.650) / 6.0 (0.236) / 3.2 (0.126)
(B)	Accumulator control valve	21.2 (0.835) / 5.0 (0.197) / 3.2 (0.126)
(C)	Primary regulator valve	16.2 (0.638) / 5.0 (0.197) / 3.2 (0.126)

2. CHECK BALL

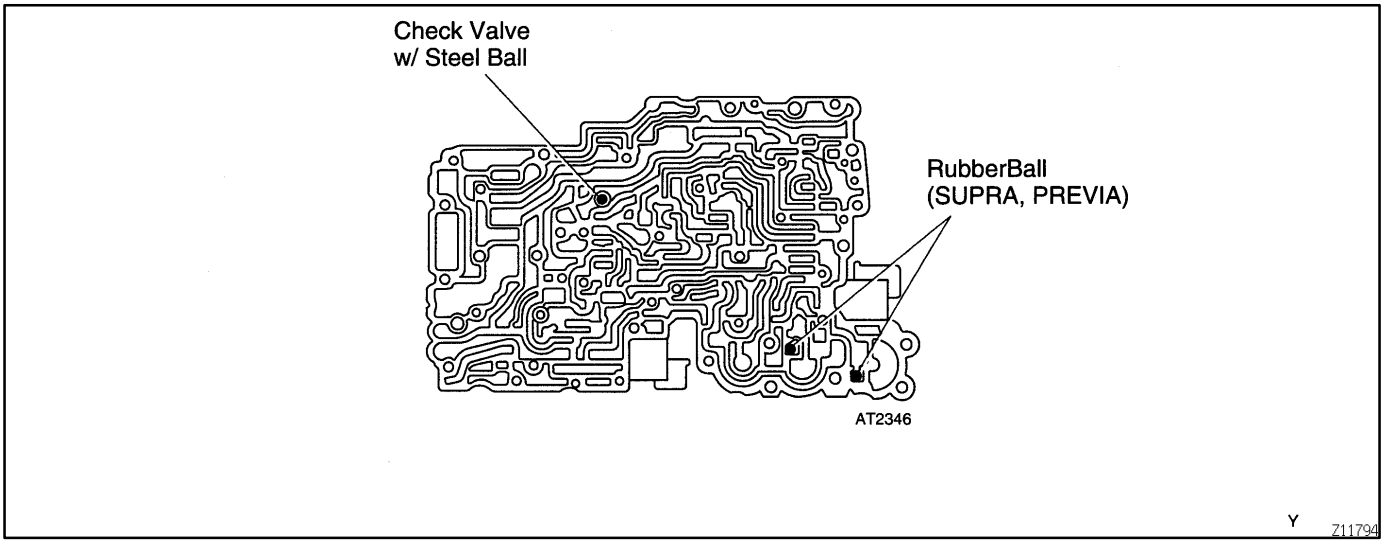

Check ball	Diameter mm (in.)
Rubber ball	5.54 (0.2181)
Steel ball	6.35 (0.2500)

3. STRAINER, SPRING AND VALVE

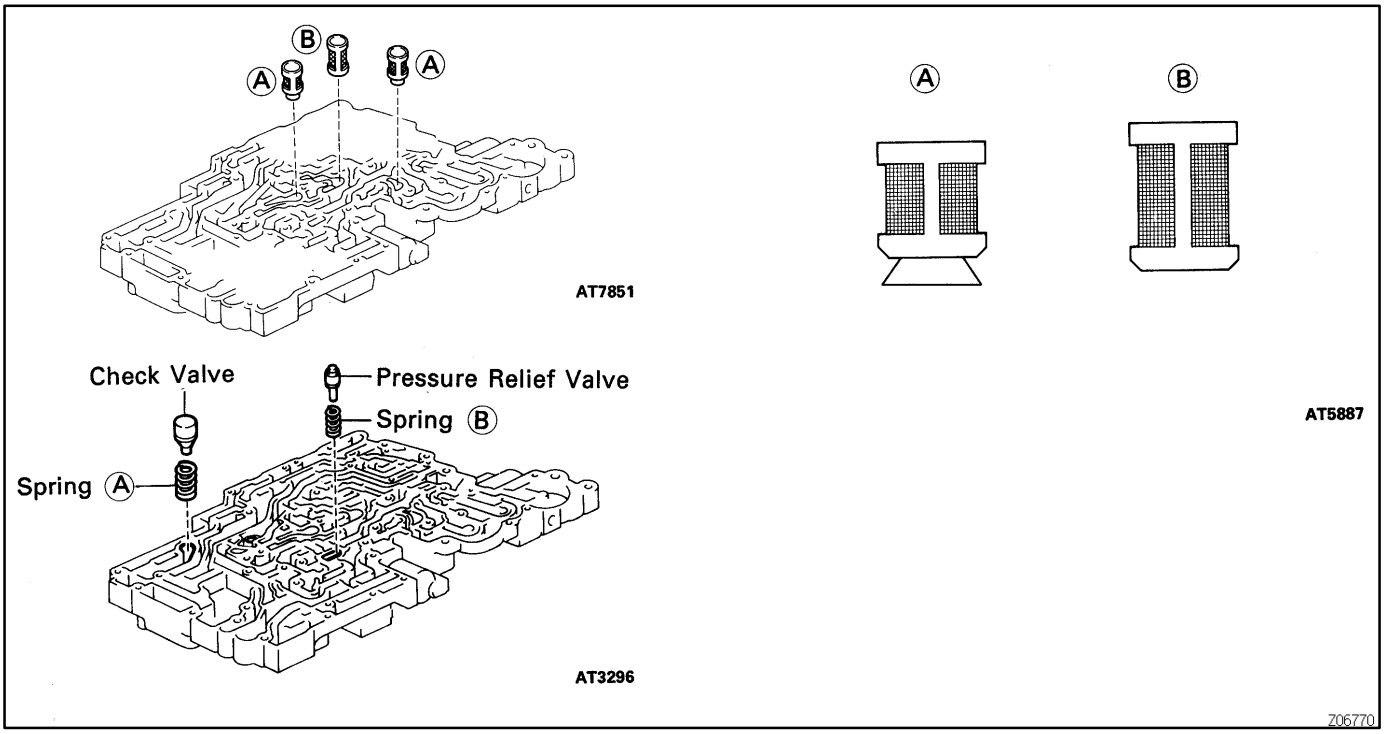

Mark	Strainer	Height / Diameter mm (in.)
(A)	Solenoid oil strainer	12.4 (0.448) / 10.3 (0.406)
(B)	Throttle oil strainer	19.5 (0.768) / 10.3 (0.406)

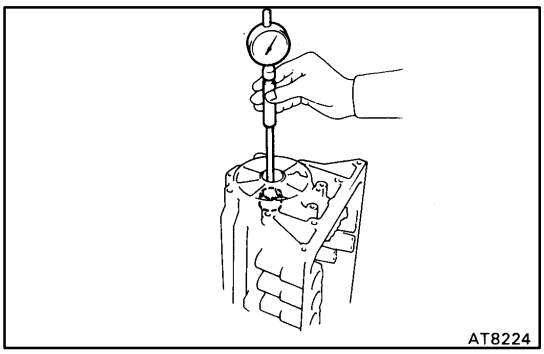

TRANSMISSION CASE

AT06J-06

TRANSMISSION CASE INSPECTION

INSPECT TRANSMISSION CASE BUSHING

Using a cylinder gauge, measure the inside diameter of the transmission case rear bushing.

Maximum inside diameter:

38.19 mm (1.5035 in.)

If the inside diameter is greater than the maximum, replace the transmission case.

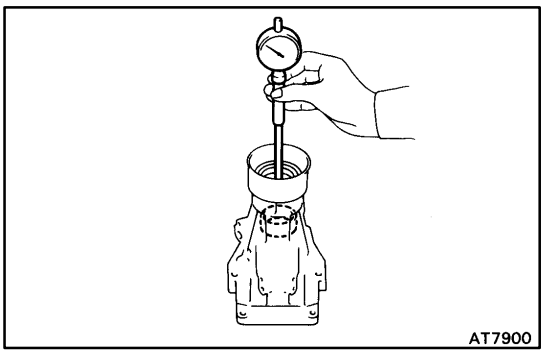

EXTENSION HOUSING

AT06K-03

EXTENSION HOUSING INSPECTION

INSPECT EXTENSION HOUSING BUSHING

Using a cylinder gauge, measure the inside diameter of the extension housing bushing.

Maximum inside diameter:

40.09 mm (1.5783 in.)

If the inside diameter is greater than the maximum, replace the extension housing.

COMPONENT PARTS INSTALLATION

AT06L-07

Disassembly, inspection and assembly of each component group have been indicated in the preceding chapter. Before assembly, make sure again that all component groups are assembled correctly.

If something wrong is found in a certain component group during assembly, inspect and repair this group immediately.

Recommended ATF:

DEXRON® II

GENERAL NOTES:

1. The automatic transmission is composed of highly precision-finished parts, necessitating careful inspection before assembly because even a small nick could cause fluid leakage or affect performance.
2. Before assembling new clutch discs, soak them in automatic transmission fluid for at least 15 minutes.
3. Apply automatic transmission fluid on sliding or rotating surfaces of parts before assembly.
4. Use petroleum jelly to keep small parts in their place.
5. Do not use adhesive cements on gaskets and similar parts.
6. When assembling the transmission, be sure to use new gaskets and O-rings.
7. Dry all parts with compressed air - never use shop rags.
8. When working with FIPG material, you must observe the following.
   - ★ Using a razor blade and gasket scraper, remove all the old packing (FIPG) material from the gasket surfaces.
   - ★ Thoroughly clean all components to remove all the loose material.
   - ★ Clean both sealing surfaces with a non-residue solvent.
   - ★ Parts must be assembled within 10 minutes of application. Otherwise, the packing (FIPG) material must be removed and reapplied.

BEARINGS AND RACES INSTALLATION POSITION AND DIRECTION

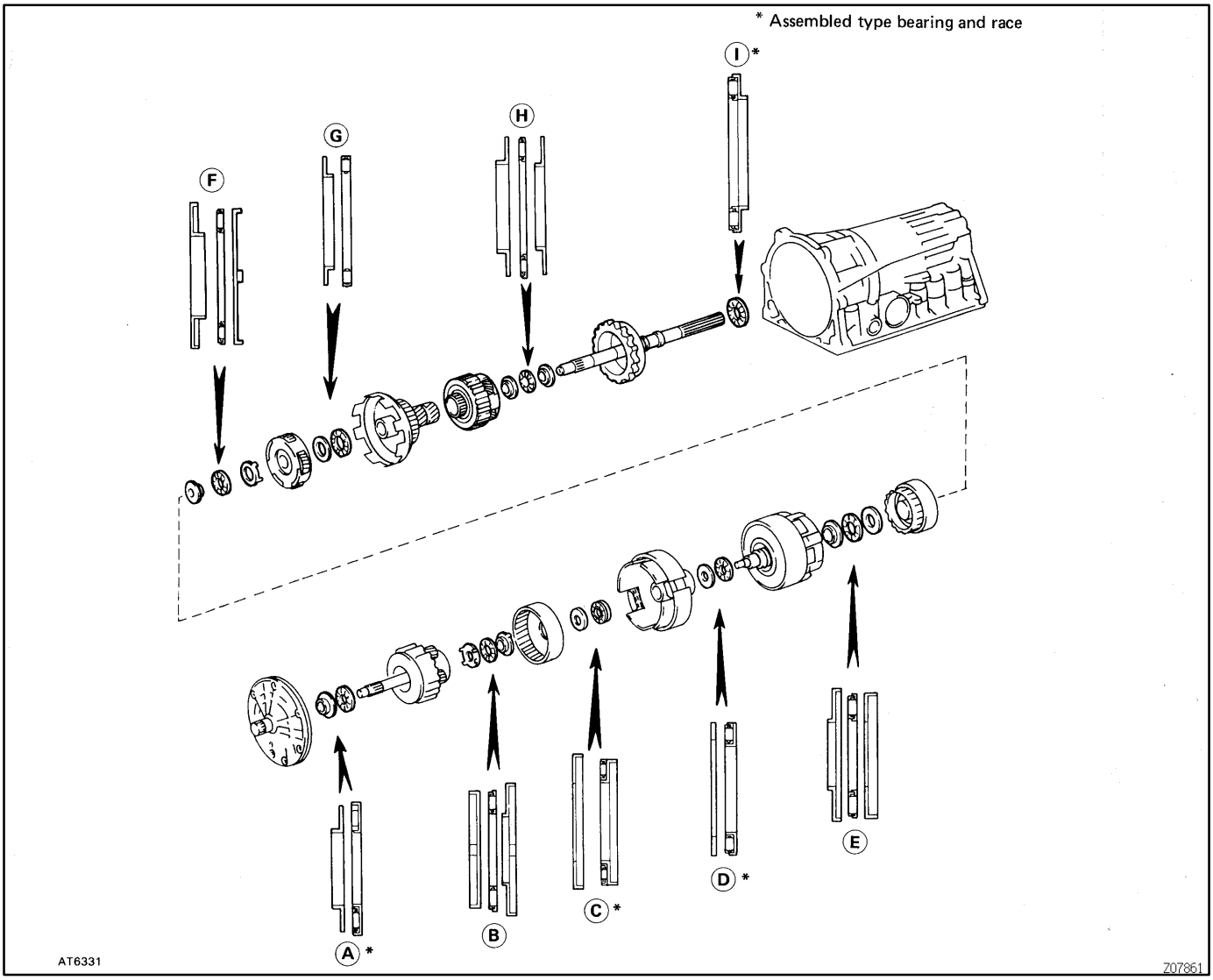

Mark	Front Race Diameter Inside / Outside mm (in.)	Thrust Bearing Diameter Inside / Outside mm (in.)	Rear Race Diameter Inside / Outside mm (in.)
(A)	28.1 (1.106) / 47.3 (1.862)	28.9 (1.138) / 50.2 (1.976)	-
(B)	27.3 (1.075) / 41.8 (1.646)	26.0 (1.024) / 46.8 (1.843)	24.2 (0.953) / 47.8 (1.882)
(C)	37.2 (1.465) / 58.8 (2.315)	33.7 (1.327) / 51.1 (1.972)	-
(D)	36.8 (1.449) / 50.9 (2.004)	33.7 (1.327) / 47.6 (1.874)	-
(E)	26.0 (1.024) / 48.9 (1.925)	26.0 (1.024) / 46.7 (1.839)	26.8 (1.055) / 47.0 (1.850)
(F)	30.6 (1.205) / 53.6 (2.110)	32.6 (1.283) / 47.7 (1.878)	34.3 (1.350) / 47.8 (1.882)
(G)	33.7 (1.327) / 47.6 (1.874)	35.5 (1.398) / 47.7 (1.878)	-
(H)	28.8 (1.134) / 44.8 (1.764)	30.1 (1.185) / 44.7 (1.760)	28.7 (1.094) / 44.8 (1.764)
(I)	-	39.2 (1.543) / 57.7 (2.272)	-

AT0SL-01

TRANSMISSION INSTALLATION

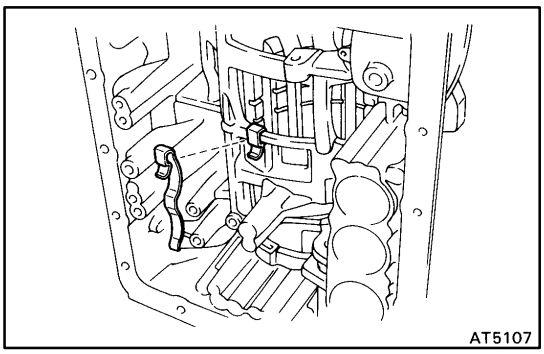

1. INSTALL TRANSMISSION CASE

Install the transmission case in the overhaul attachment.

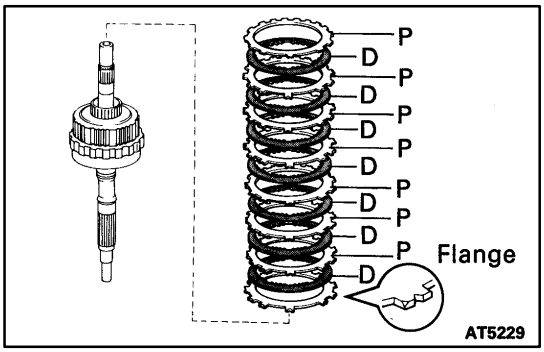

2. INSTALL BEARING AND RACE

(a) Coat the assembled bearing and race with petroleum jelly.

(b) Install it onto the case.

Assembled bearing and race diameter

mm (in.)

	Inside	outside
Bearing and race	39.2 (1.543)	57.7 (2.272)

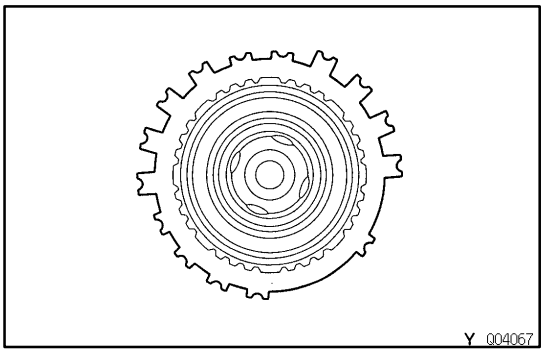

3. INSTALL LEAF SPRING

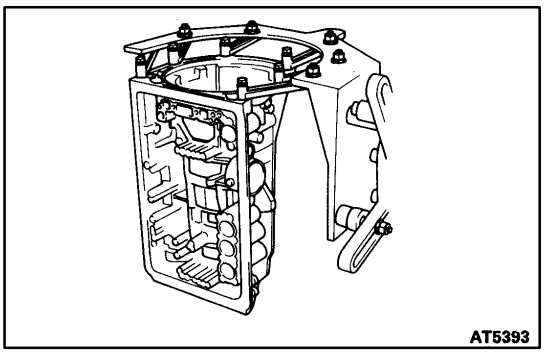

4. INSTALL REAR PLANETARY GEAR WITH FIRST AND REVERSE BRAKE PACK AND OUTPUT SHAFT

(a) Install the flange, the rounded edge facing upward.

(b) Install the 6 plates and 6 discs.

Install in order: P = Plate D = Disc

D-P-D-P-D-P-D-P-D-P-D-P

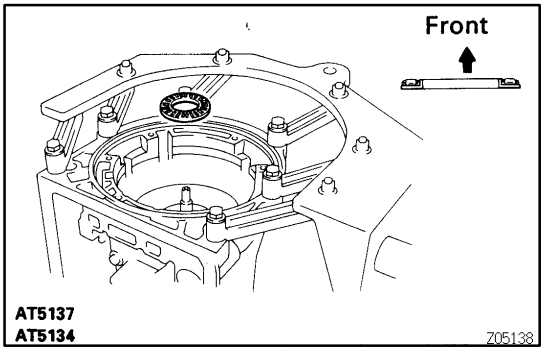

(c) Align the teeth on the flange, discs and plates.

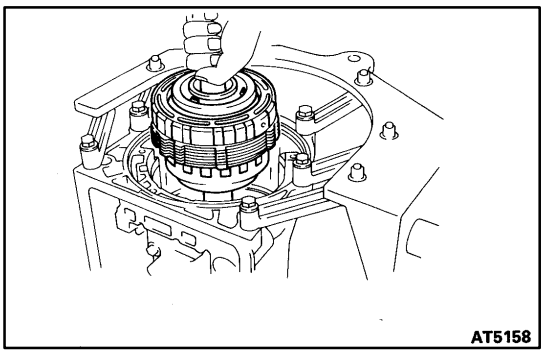

(d) face the snap ring upward (front side) and install the second brake drum to the planetary gear.
NOTICE: Face the oil hole in the drum towards the lower side of the transmission case (the side the valve body is installed).

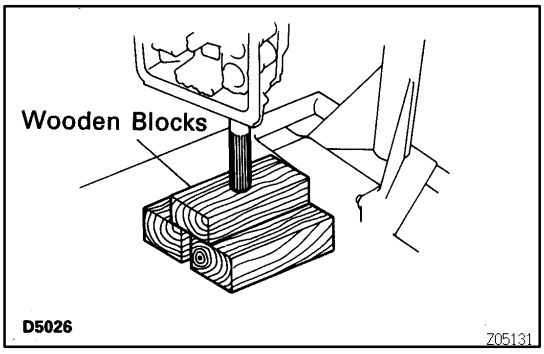

(e) Align the splines of the transmission case and the assembled rear planetary gear, first and reverse brake and output shaft, indicated by A.

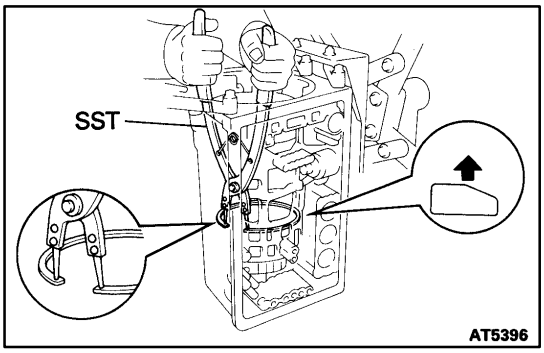

(f) Install the assembled output shaft.

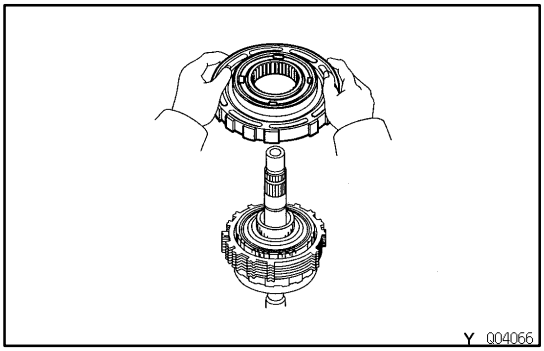

(g) Rest the output shaft on wooden blocks.

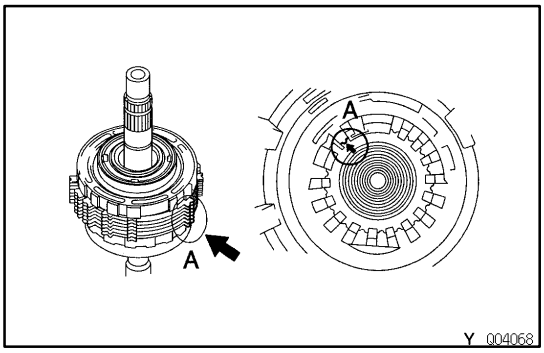

(h) Using SST, install the snap ring.
SST 09350-30020 (09350-07060)

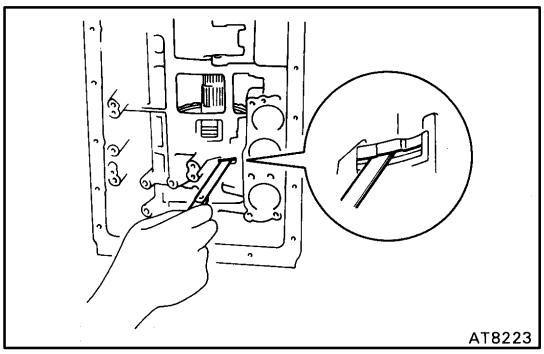

5. CHECK PACK CLEARANCE OF FIRST AND REVERSE BRAKE

Using a feeler gauge, measure the clearance between the plate and second brake drum.

Clearance:

0.60 - 1.12 mm (0.0236 - 0.0441 in.)

If the values are non-standard, select another flange.

HINT: There are 6 different thicknesses for the flange.

Flange thickness

mm (in.)

No.	Thickness	No.	Thickness
50	5.0 (0.197)	53	4.4 (0.173)
51	4.8 (0.189)	54	4.2 (0.165)
52	4.6 (0.181)	55	4.0 (0.157)

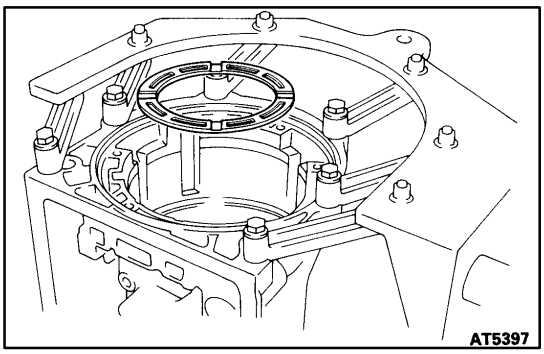

6. INSTALL SECOND BRAKE PISTON SLEEVE

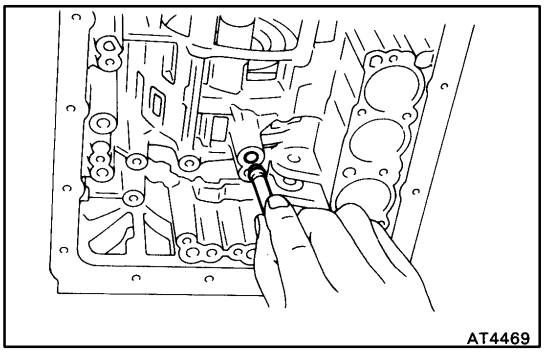

7. INSTALL NEW BRAKE DRUM GASKET

(a) Coat the gasket with ATF.

(b) Install a new brake drum gasket.

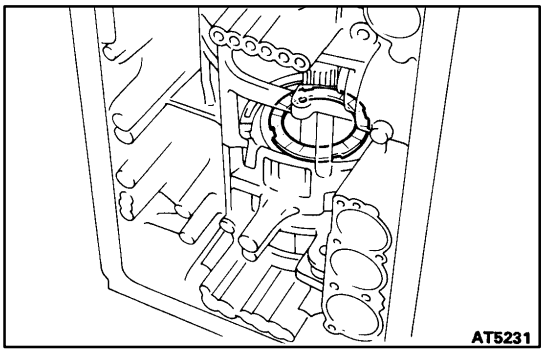

8. INSTALL NO.1 ONE-WAY CLUTCH

(a) Install the No.1 thrust washer onto the second brake.

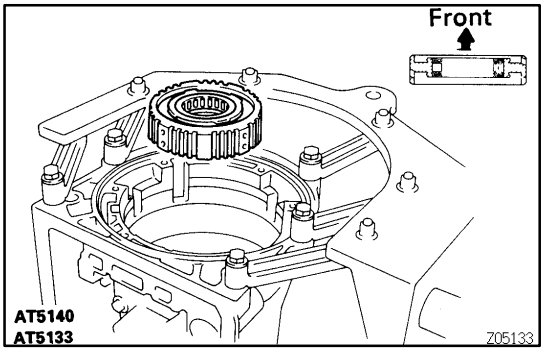

(b) Install the No.1 one-way clutch.

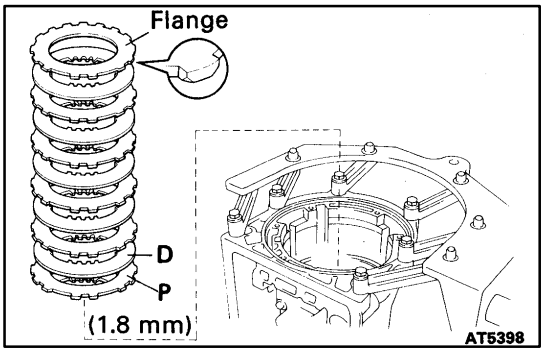

9. INSTALL FLANGE, PLATES AND DISCS OF SECOND BRAKE

(a) Install the 1.8 mm (0.071 in.) thick plate with the rounded edge side of the plate facing the disc.

(b) Install the 5 plates and 5 discs.
Install in order: P = Plate D = Disc
D-P-D-P-D-P-D-P-D-P

(c) Install the flange with the rounded edge of the flange facing the disc.

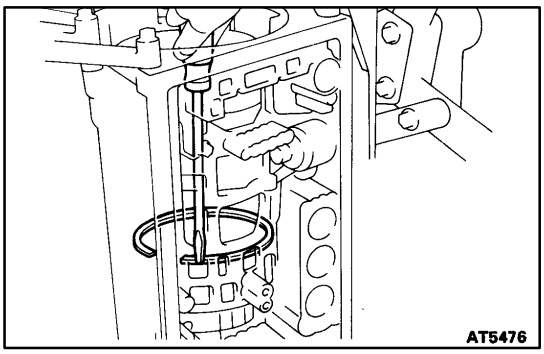

(d) Using a screwdriver, install snap ring.

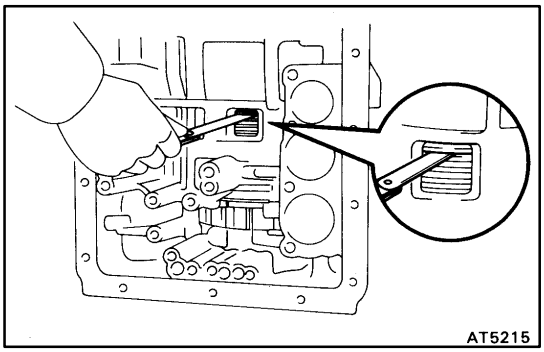

10. CHECK PACK CLEARANCE OF SECOND BRAKE

Using a feeler gauge, measure the clearance between the snap ring and flange.

Clearance:

0.62 - 1.98 mm (0.0244 - 0.0780 in.)

If the values are non-standard, check for an improper installation.

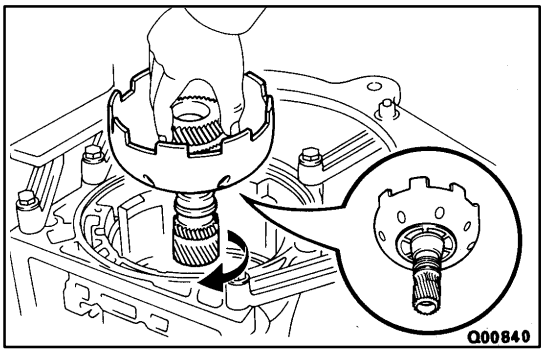

11. INSTALL PLANETARY SUN GEAR

While turning the planetary sun gear clockwise, install it into the No.1 one-way clutch.

HINT: Confirm the thrust washer is installed correctly.

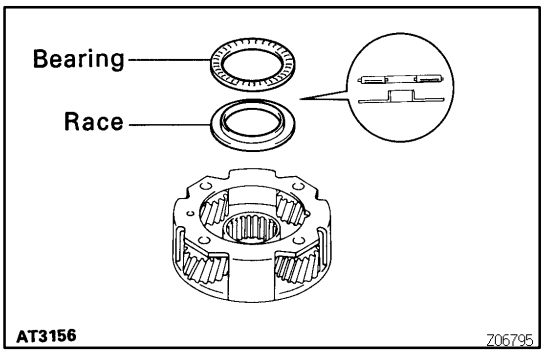

12. INSTALL FRONT PLANETARY GEAR

(a) Coat the bearing and race with petroleum jelly and install them onto the front planetary gear.

Bearing and race diameter

mm (in.)

	Inside	Outside
Bearing	35.5 (1.398)	47.7 (1.878)
Race	33.7 (1.327)	47.6 (1.874)

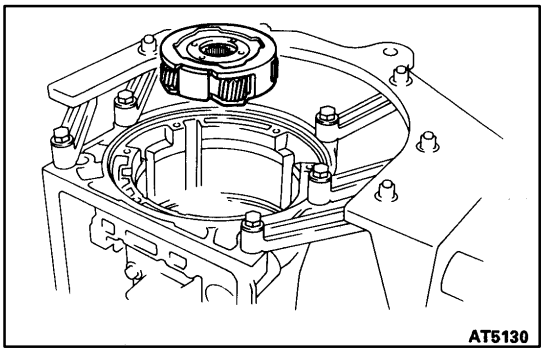

(b) Install the front planetary gear to the sun gear input drum.

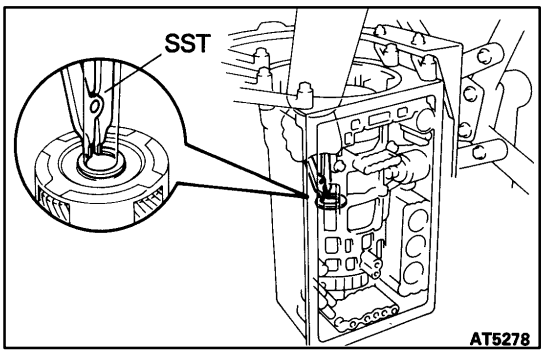

(c) Using SST, install the snap ring.
SST 09350-30020 (09350-07070)
(d) Remove the wooden blocks under the output shaft.

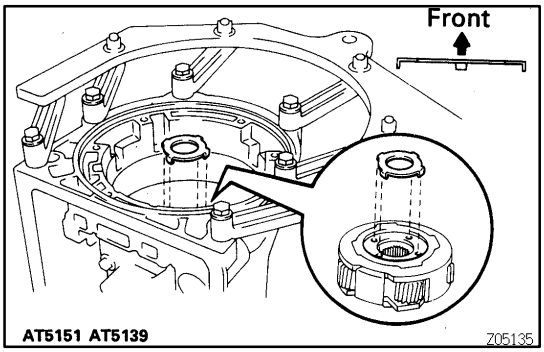

(e) Coat the bearing race with petroleum jelly and install it onto the front planetary gear.
Race diameter
mm (in.)

	Inside	Outside
Race	34.3 (1.350)	47.8 (1.882)

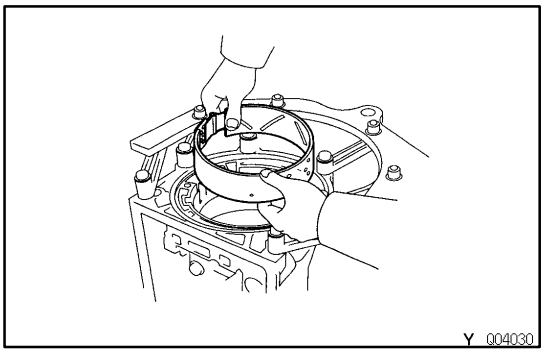

13. INSTALL SECOND COAST BRAKE BAND
(a) Install the second coast brake band to the case.

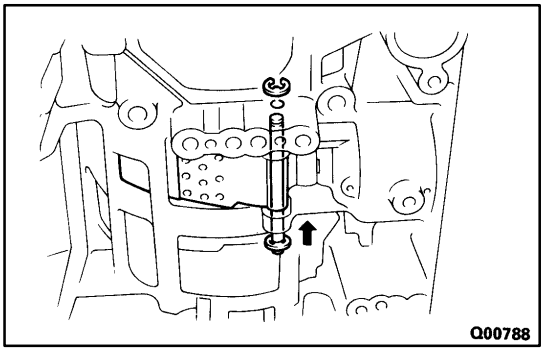

(b) Install the E-ring to the pin.
(c) Install the pin through the brake band.

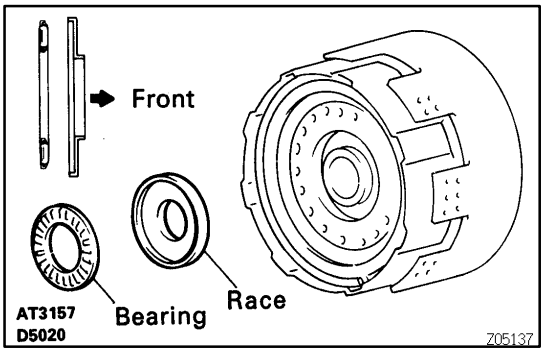

14. INSTALL FRONT PLANETARY RING GEAR TO FORWARD AND DIRECT CLUTCH
(a) Coat the bearing and race with petroleum jelly and install them onto the forward clutch.
Bearing and race diameter
mm (in.)

	Inside	Outside
Bearing	26.0 (1.024)	46.7 (1.839)
Race	26.0 (1.024)	48.9 (1.925)

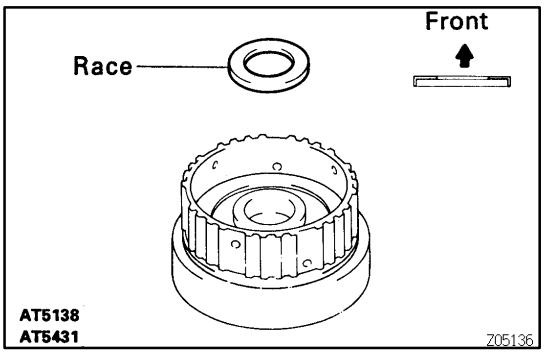

(b) Coat the race with petroleum jelly and install it onto the front planetary ring gear.

Race diameter

mm (in.)

	Inside	Outside
Race	26.8 (1.055)	47.0 (1.850)

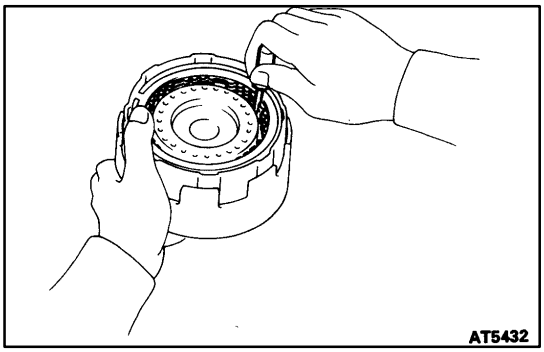

(c) Align the flukes of the discs in the forward clutch.

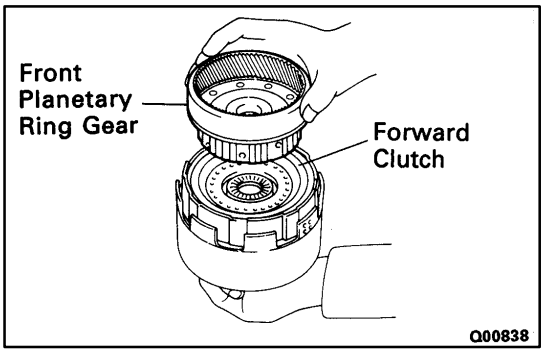

(d) Align the splines of the front planetary ring gear with the flukes of the discs and install the front planetary ring gear to the forward clutch.

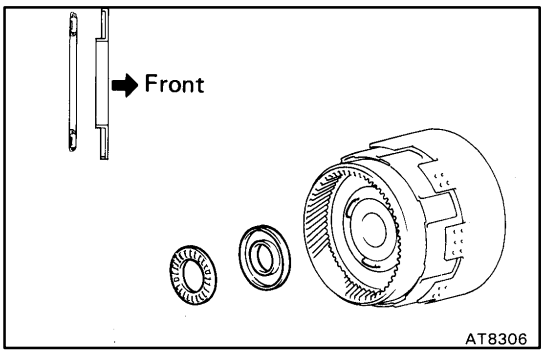

15. INSTALL ASSEMBLED DIRECT CLUTCH, FORWARD CLUTCH AND FRONT PLANETARY RING GEAR INTO CASE

(a) Coat the bearing and race with petroleum jelly and install them onto the ring gear.

Bearing and race diameter

mm (in.)

	Inside	Outside
Bearing	32.6 (1.283)	47.7 (1.878)
Race	30.6 (1.205)	53.6 (2.110)

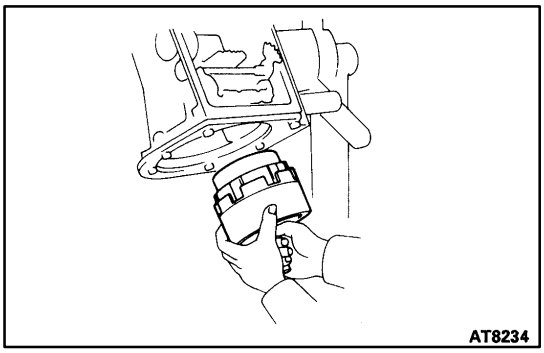

(b) Install the assembled direct clutch, forward clutch and front planetary ring gear into the transmission case.

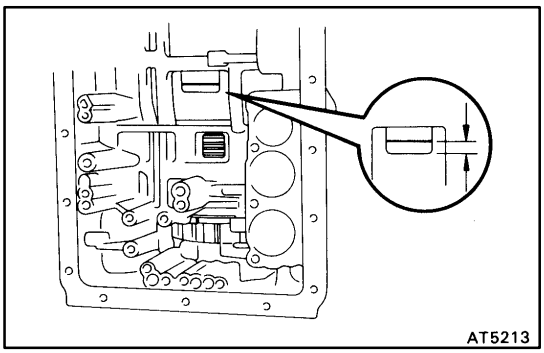

(c) Using vernier calipers, measure the distance between the sun gear input drum and direct clutch drum, as shown in the illustration.

Height:

5.3 - 7.3 mm (0.209 - 0.287 in.)

If the values are non-standard, check for an improper installation.

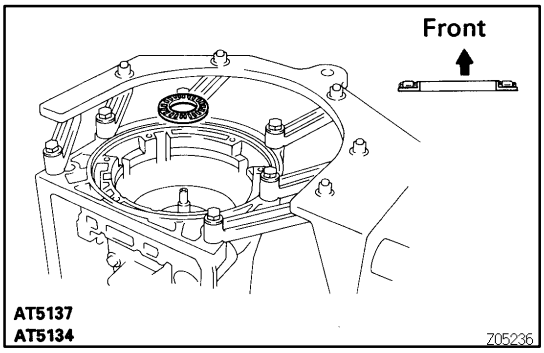

(d) Coat the assembled bearing and race with petroleum jelly and install it onto the forward clutch.

Assembled bearing and race diameter

mm (in.)

	Inside	Outside
Bearing and race	33.7 (1.327)	47.6 (1.874)

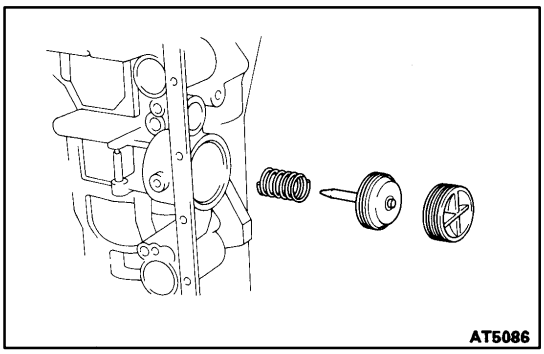

16. INSTALL SECOND COAST BRAKE COVER, PISTON ASSEMBLY AND SPRING

(a) Coat the 2 new O-rings with ATF and install them to the cover.

(b) Install the spring, piston assembly and cover to the case.

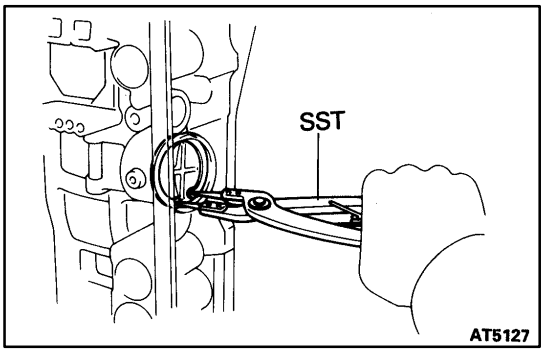

(c) Using SST, install the snap ring.
SST 09350-30020 (09350-07060)

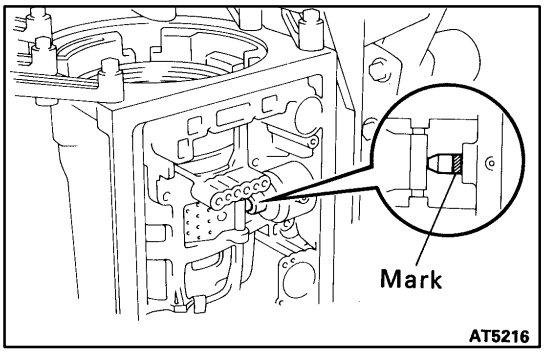

17. CHECK PISTON ROD STROKE OF SECOND COAST BRAKE

(a) Place a mark on the second coast brake piston rod.

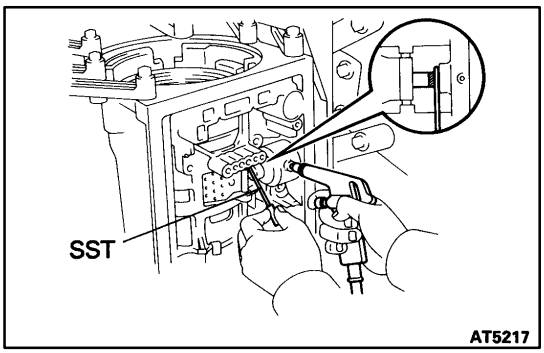

(b) Using SST, measure the stroke while applying and releasing compressed air (392-785 kPa, 4-8 kgf/cm^2, 57-114 psi).
SST 09240-00020
Piston rod stroke:
1.5 - 3.0 mm (0.059 - 0.118 in.)
If the stroke is more than specified, replace the piston rod.
Piston rod length:
71.4 mm (2.811 in.)
72.9 mm (2.870 in.)
If it is still more than standard value, replace the brake band with a new one.

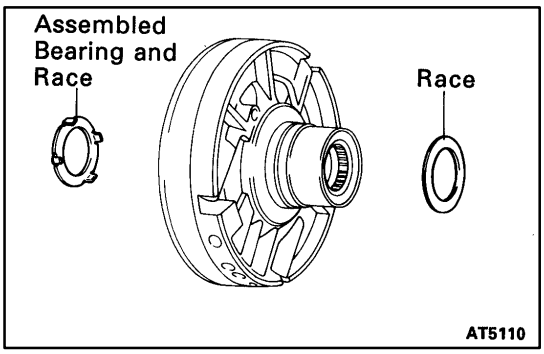

18. INSTALL OVERDRIVE SUPPORT ASSEMBLY

(a) Coat the bearing and race with petroleum jelly and install it onto the overdrive support assembly.
Bearing and race diameter
mm (in.)

	Inside	Outside
Race	36.8 (1.449)	50.9 (2.004)
Bearing	33.6 (1.323)	50.3 (1.980)

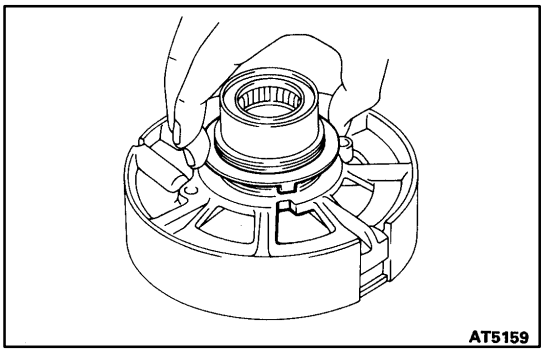

(b) Confirm the thrust washer is installed correctly.
HINT: Make sure that the lug shape matches the hole on the O/D support.

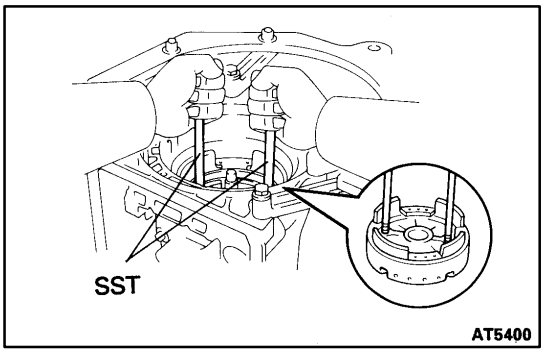

(c) Using 2 bolts of SST, aim the bolt and oil holes of the overdrive support toward the valve body side, and align them with the bolt holes of the transmission case and insert.
SST 09350-30020 (09350-07020)

(d) Temporarily tighten the 2 bolts.

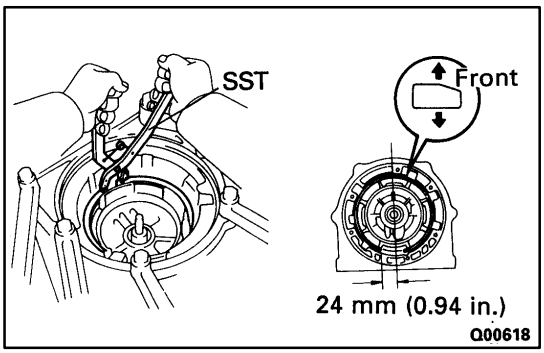

(e) Using SST, install the snap ring.
SST 09350-30020 (09350-07060)
HINT: Install the snap ring open end toward the valve body.

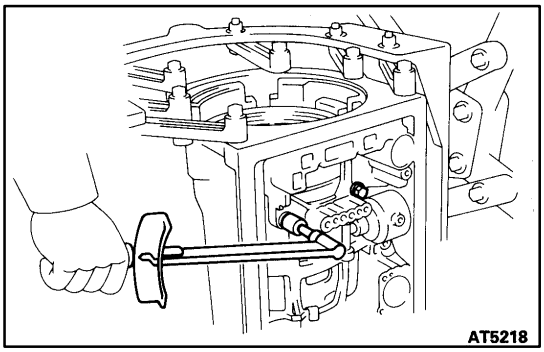

(f) Torque the 2 bolts.
Torque: 25 N·m (260 kgf·cm, 19 ft·lbf)

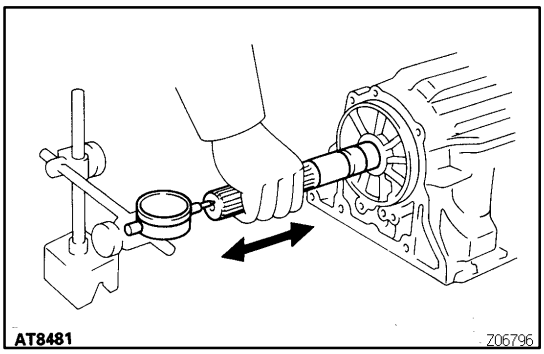

19. CHECK OUTPUT SHAFT

(a) Using a dial indicator, measure the end play of the output shaft with hand.

End play:

0.27 - 0.86 mm (0.0106 - 0.0339 in.)

If the values are non-standard, check for an improper installation.

(b) Check to see that output shaft rotates smoothly.

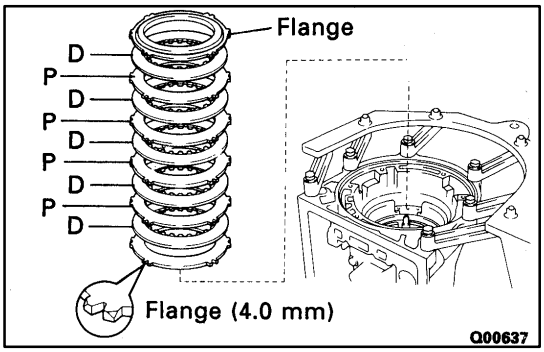

20. INSTALL FLANGES, PLATES AND DISCS OF OVER-DRIVE BRAKE

(a) Install the 4.0 mm (0.157 in.) thick flange (flat ring) with the rounded edge side of the flange facing the discs.

(b) Install the plates and discs.

Install in order: P = Plate D = Disc

PREVIA:

D-P-D-P-D

OTHERS:

D-P-D-P-D-P-D

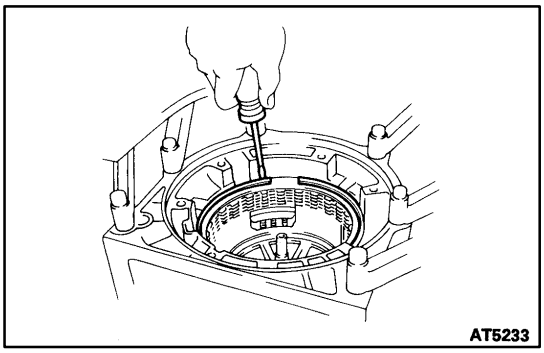

(c) Install the flange (stepped ring) with the flat side of the flange facing the disc.

(d) Using a screwdriver, install the snap ring.

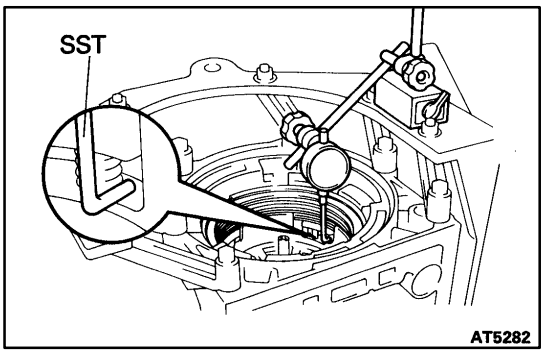

21. CHECK PISTON STROKE OF OVERDRIVE BRAKE

(a) Place SST and a dial indicator onto the overdrive brake piston.

SST 09350-30020 (09350-06120)

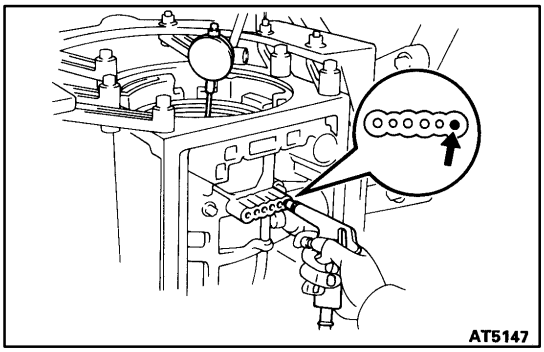

(b) Measure the stroke while applying and releasing compressed air (392-785 kPa, 4-8 kgf/cm^2, 57-114 psi).

Piston stroke:

PREVIA:

1.40 - 1.70 mm (0.0551 - 0.0669 in.)

OTHERS:

1.40 - 1.70 mm (0.0551 - 0.0669 in.)

If the piston stroke is less than the limit, parts may have been assembled incorrectly, check and reassemble again.

If the piston stroke is non- standard, select another flange.

HINT: There are 7 different thicknesses for the flange.

Flange thickness

mm (in.)

No.	Thickness	No.	Thickness
77	3.3 (0.130)	81	3.8 (0.150)
78	3.5 (0.138)	82	3.9 (0.154)
79	3.6 (0.142)	83	4.0 (0.157)
80	3.7 (0.146)		

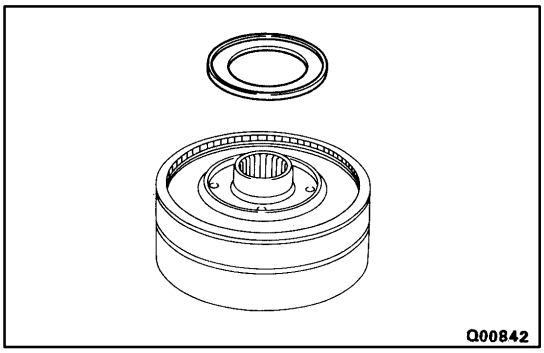

22. INSTALL OVERDRIVE PLANETARY GEAR UNIT WITH OVERDRIVE DIRECT CLUTCH AND ONE- WAY CLUTCH

(a) Coat the race with petroleum jelly and install them onto the overdrive support.

Race diameter

mm (in.)

	Inside	Outside
Race	37.1 (1.461)	59.0 (2.323)

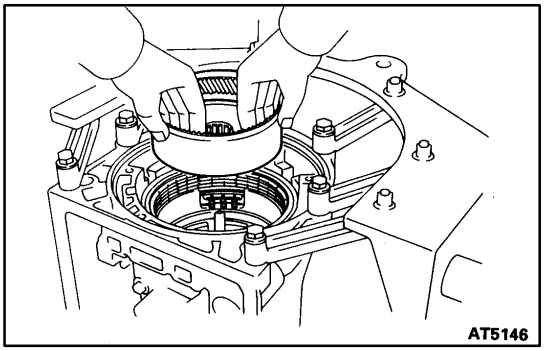

(b) Install the overdrive planetary ring gear.

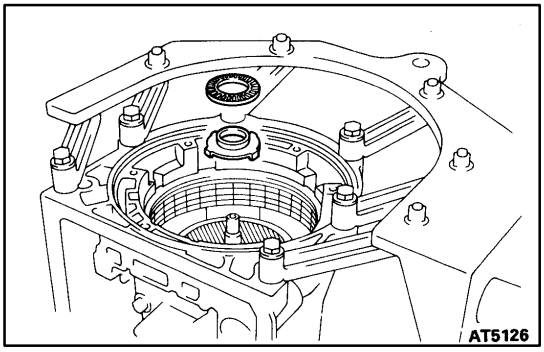

(c) Coat the bearing and race with petroleum jelly and install them onto the planetary ring gear.

Bearing and race diameter

mm (in.)

	Inside	Outside
Bearing	26.0 (1.024)	46.8 (1.843)
Race	24.2 (0.953)	47.8 (1.882)

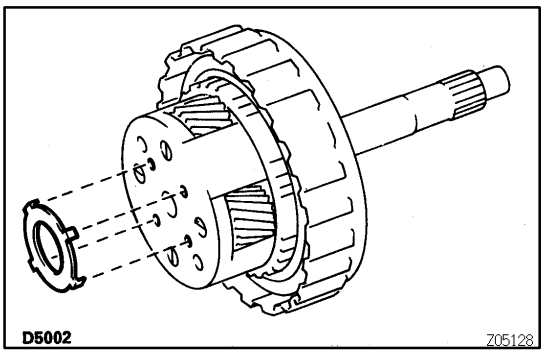

(d) Coat the race with petroleum jelly and install it onto the planetary gear.
Race diameter
mm (in.)

	Inside	Outside
Race	27.1 (1.067)	41.8 (1.646)

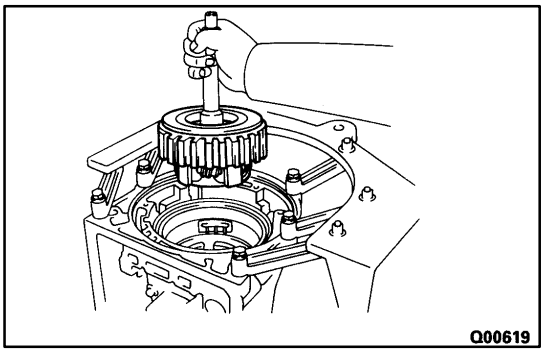

(e) Install the overdrive planetary gear with the overdrive direct clutch and one-way clutch.

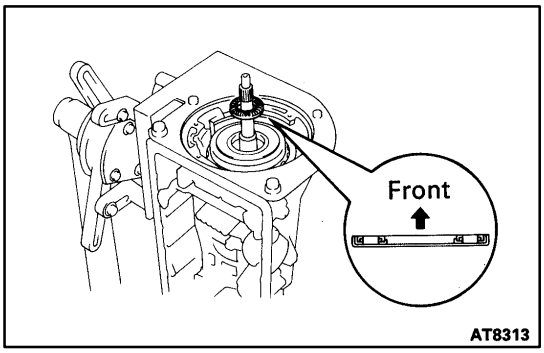

(f) Coat the assembled bearing and race with petroleum jelly and install it onto the overdrive direct clutch.
Bearing and race diameter
mm (in.)

	Inside	Outside
Bearing and race	28.9 (1.138)	50.2 (1.976)

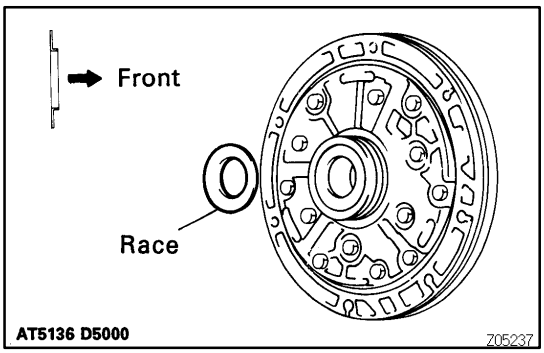

23. INSTALL OIL PUMP INTO CASE

(a) Coat the race with petroleum jelly and install it onto the oil pump.
Race diameter
mm (in.)

	Inside	Outside
Race	28.1 (1.106)	47.3 (1.862)

(b) Coat a new O-ring with ATF and install it around the pump body.
(c) Place the oil pump through the input shaft, and align the bolt holes of the pump body with the transmission case.
(d) Hold the input shaft, and lightly press the oil pump body to slide the oil seal rings into the O/D direct clutch drum.
NOTICE: Do not push on the oil pump strongly, or the oil seal ring will stick to the direct clutch drum.

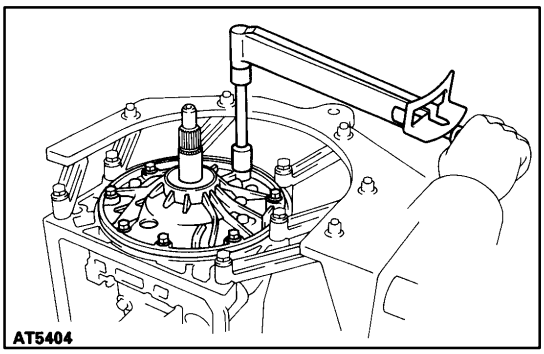

(e) Install the 7 bolts.
Torque: 22 N·m (220 kgf·cm, 16 ft·lbf)

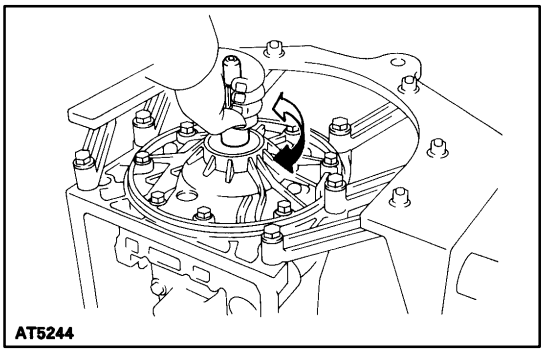

24. CHECK INPUT SHAFT ROTATION
Make sure the input shaft rotates smoothly.

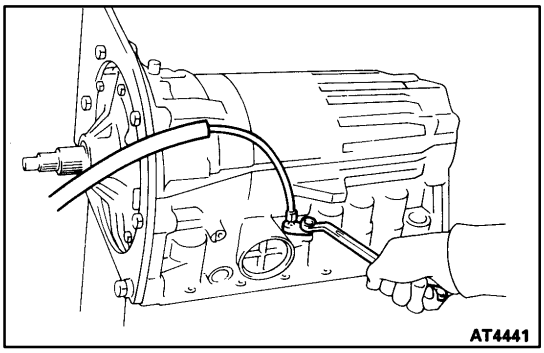

25. INSTALL THROTTLE CABLE
(a) Coat a new O-ring with ATF and install it to the cable.
(b) Install the cable to the case.

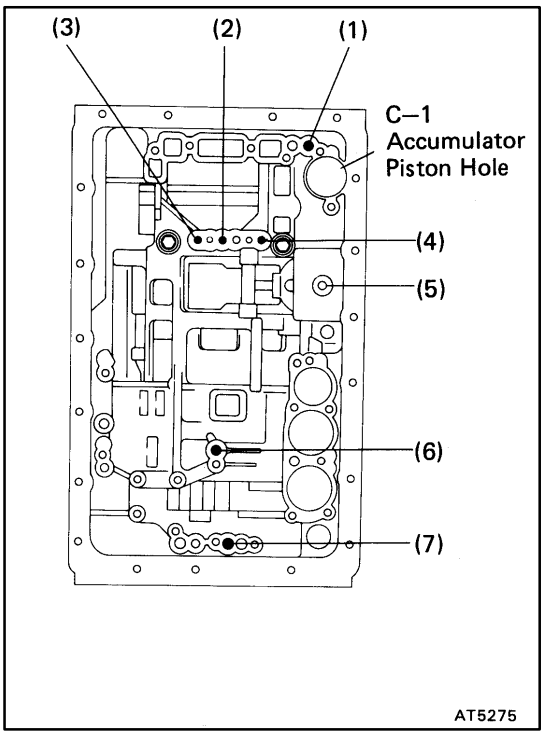

26. INDIVIDUAL PISTON OPERATION INSPECTION
Check for the sound of operation while applying compressed air into the oil hole indicated in the illustration.
HINT: When inspecting the O/D direct clutch, check with the C_0 accumulator piston hole closed.
If there is no noise, disassemble and check the installation condition of the parts.
(1) O/D direct clutch
(2) Direct clutch
(3) Forward clutch
(4) O/D brake
(5) Second coast brake
(6) Second brake
(7) First and reverse brake

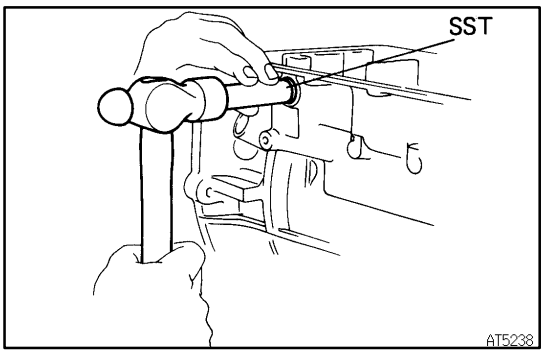

27. INSTALL MANUAL VALVE LEVER, SHAFT AND OIL SEAL

(a) Using SST, drive in 2 new oil seals.
SST 09350-30020 (09350-07110)

(b) Coat the oil seal lip with MP grease.

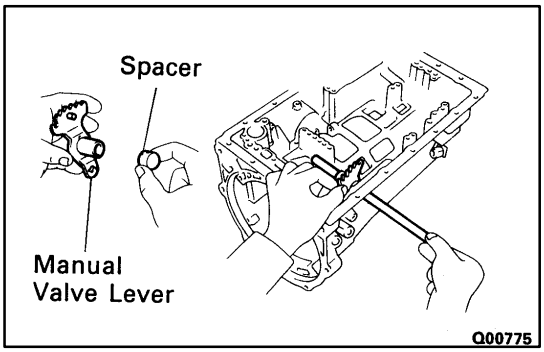

(c) Install a new spacer to the manual valve lever.

(d) Install the manual valve lever shaft to the transmission case through the manual valve lever.

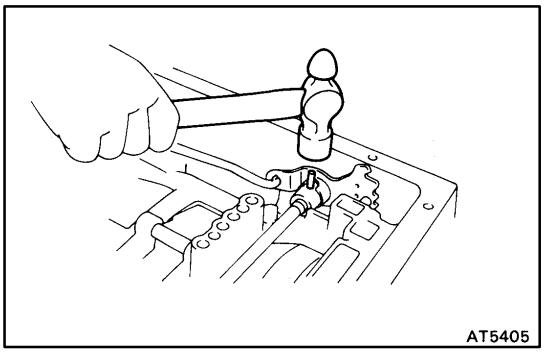

(e) Using a hammer, drive in a new spring pin.

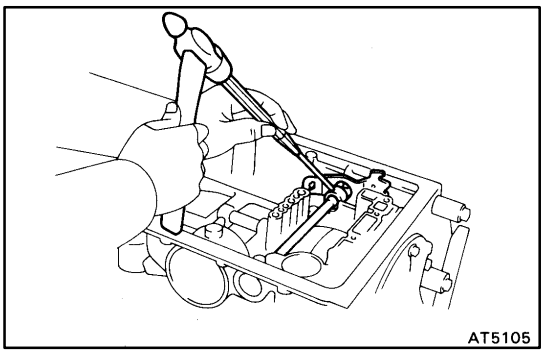

(f) Match the manual valve lever indentation with the spacer hole and calk them the punch.

(g) Make sure the shaft rotates smoothly.

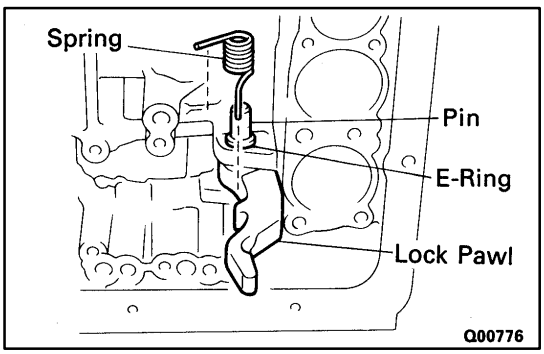

28. INSTALL PARKING LOCK PAWL AND ROD

(a) Install the E-ring to the shaft.

(b) Install the parking lock pawl, shaft and spring.

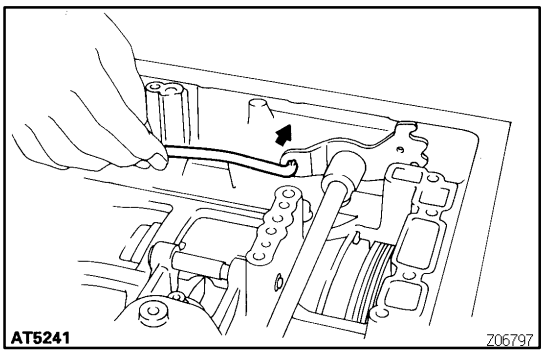

(c) Connect the parking lock rod to the manual valve lever.

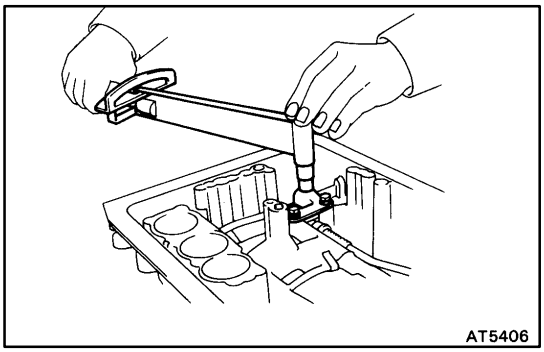

(d) Install the parking lock pawl bracket and torque the 3 bolts.
Torque: 7.4 N·m (75 kgf·cm, 65 in.·lbf)

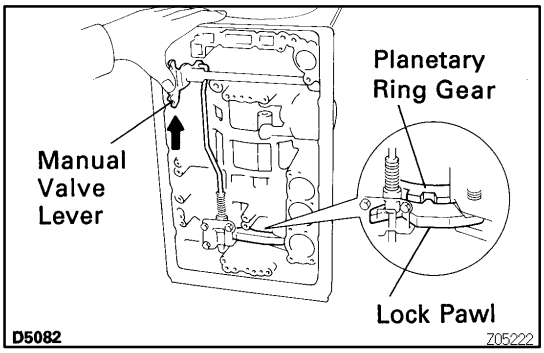

(e) Shift the manual valve lever to the P position, and confirm that the planetary ring gear is correctly locked up by the pawl.

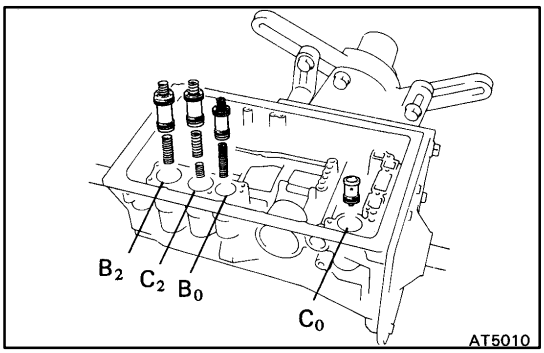

29. INSTALL ACCUMULATOR SPRINGS AND PISTONS

(a) Coat the new O-rings with ATF and install them to the pistons.

(b) Install the 3 springs and four accumulator pistons to the bore.
HINT: The pistons are marked in relief with either C_0, B_0, C_2 or B_2 to differentiate between them.

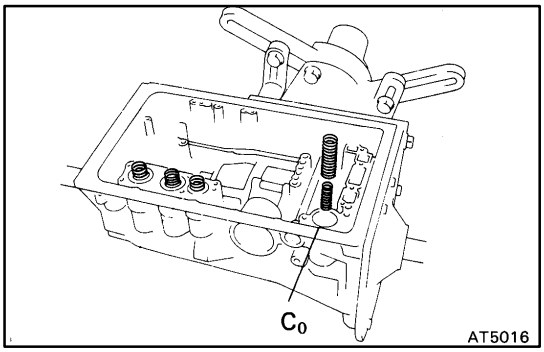

(c) Install the 2 springs to the C_0 accumulator piston.

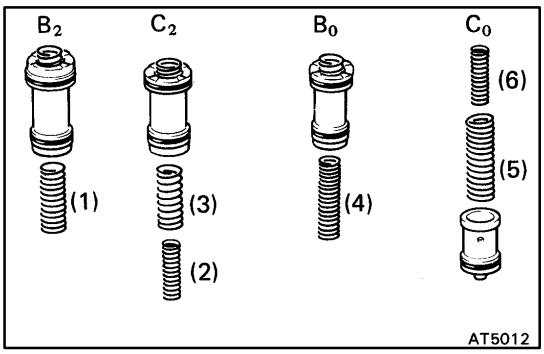

★ **Accumulator Spring**

TRUCK, 4 RUNNER, T100:

Spring	Free length Outer diameter	Color
(1) B_2	70.5 mm (2.776 in.) 19.7 mm (0.776 in.)	Yellow
(2) C_2 (Inner)	42.1 mm (1.657 in.) 14.7 mm (0.579 in.)	Pink
(3) C_2 (Outer)	70.2 mm (2.764 in.) 20.2 mm (0.795 in.)	Purple
(4) B_0	62.0 mm (2.441 in.) 16.0 mm (0.630 in.)	Green
(5) C_0 (Outer)	46.0 mm (1.811 in.) 14.0 mm (0.551 in.)	Yellow
(6) C_0 (Inner)	74.6 mm (2.397 in.) 20.9 mm (0.823 in.)	Orange

SUPRA:

Spring	Free length Outer diameter	Color
(1) B_2	73.4 mm (2.890 in.) 19.9 mm (0.783 in.)	Red
(2) C_2 (Inner)	42.1 mm (1.657 in.) 14.7 mm (0.579 in.)	Pink
(3) C_2 (Outer)	70.2 mm (2.764 in.) 20.2 mm (0.795 in.)	Purple
(4) B_0	67.0 mm (2.638 in.) 16.2 mm (0.638 in.)	White & Blue
(5) C_0 (Outer)	46.0 mm (1.811 in.) 14.0 mm (0.551 in.)	Yellow
(6) C_0 (Inner)	74.6 mm (2.397 in.) 20.9 mm (0.823 in.)	Orange

PREVIA:

Spring	Free length Outer diameter	Color
(1) B_2	75.3 mm (2.965 in.) 20.0 mm (0.787 in.)	White & Red
(2) C_2 (Inner)	42.1 mm (1.657 in.) 14.7 mm (0.579 in.)	Pink
(3) C_2 (Outer)	70.2 mm (2.764 in.) 20.2 mm (0.795 in.)	Purple
(4) B_0	67.0 mm (2.638 in.) 16.2 mm (0.638 in.)	White & Blue
(5) C_0 (Outer)	46.0 mm (1.811 in.) 14.0 mm (0.551 in.)	Yellow
(6) C_0 (Inner)	74.6 mm (2.397 in.) 20.9 mm (0.823 in.)	Orange

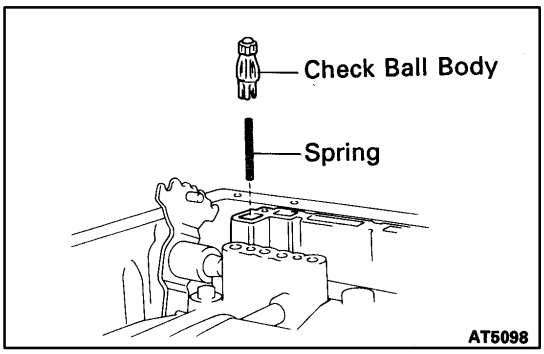

30. INSTALL CHECK BALL BODY AND SPRING

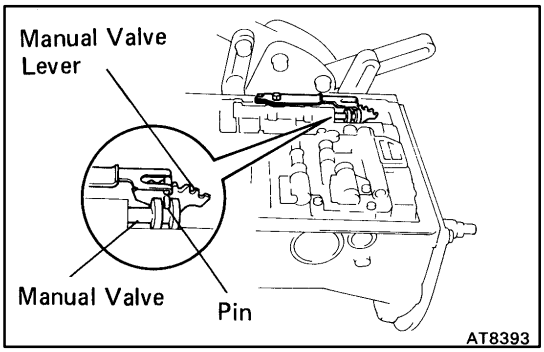

AT0SM-01

31. INSTALL VALVE BODY

(a) Align the groove of the manual valve to pin of the lever.

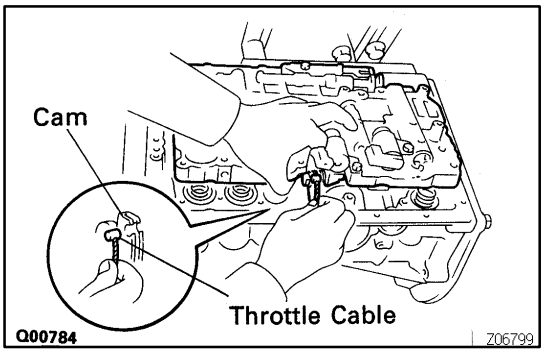

(b) Connect the throttle cable to the cam.

(c) Confirm the springs into the accumulator pistons are installed correctly.

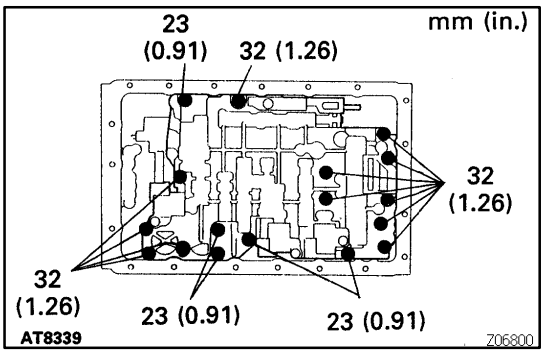

(d) Install the 17 bolts.
HINT: Each bolt length is indicated in the illustration.
Torque: 10 N·m (100 kgf·cm, 7 ft·lbf)

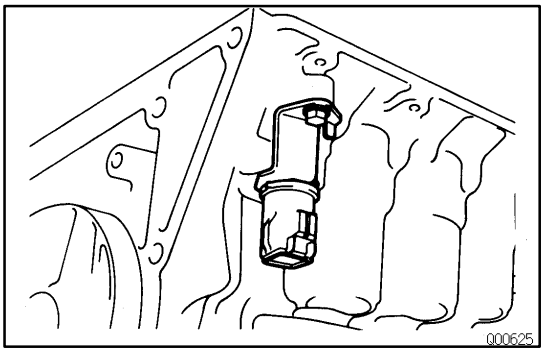

32. INSTALL SOLENOID WIRING

(a) Coat a new O-ring with ATF and install it to the grommet.

(b) Install the solenoid wiring to the case and install the stopper plate.

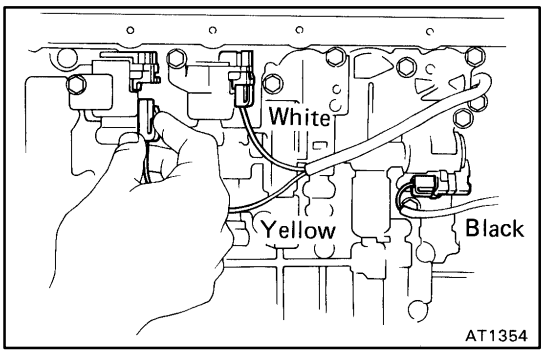

(c) Connect the connectors to the No.1, No.2 and lock-up solenoids.

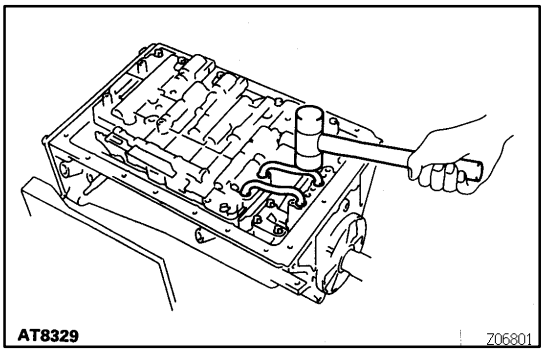

33. INSTALL OIL TUBES

Using a plastic hammer, install the tubes into position.

NOTICE: Be careful not to bend or damage the tubes.

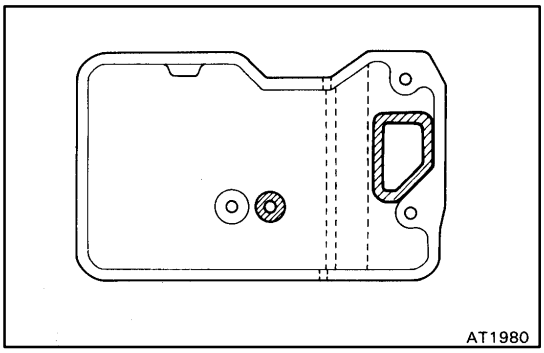

34. INSTALL OIL STRAINER AND GASKETS

(a) Install the 2 new gaskets in the oil strainer.

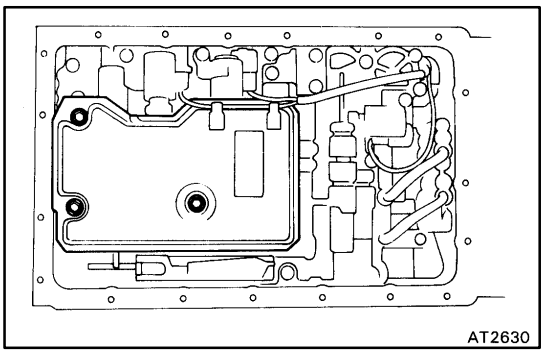

(b) Install and torque the 3 bolts.
Torque: 10 N·m (100 kgf·cm, 7 ft·lbf)

(c) Clamp the solenoid wire.

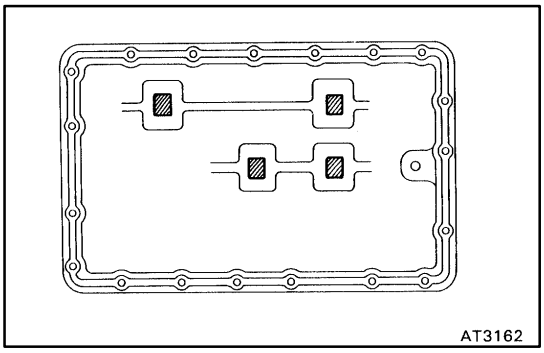

35. INSTALL MAGNETS IN PAN

(a) Install the 3 magnets in the indications of the oil pan.

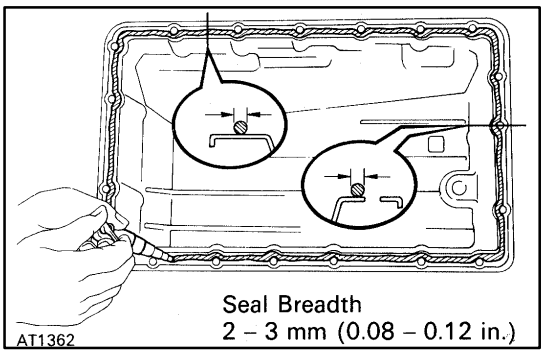

36. INSTALL OIL PAN

(a) Remove any packing material and be careful not to drop oil on the contacting surfaces of the transmission case and oil pan.

(b) Apply seal packing to the oil pan.
Seal packing:
Part No. 08826-00090, THREE BOND 1281 or equivalent

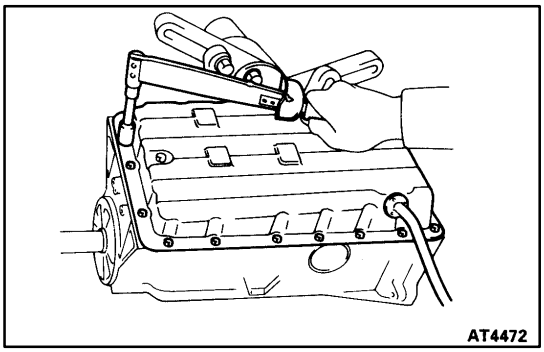

(c) Install and torque the 19 bolts.
Torque: 7.4 N·m (75 kgf·cm, 65 in.·lbf)

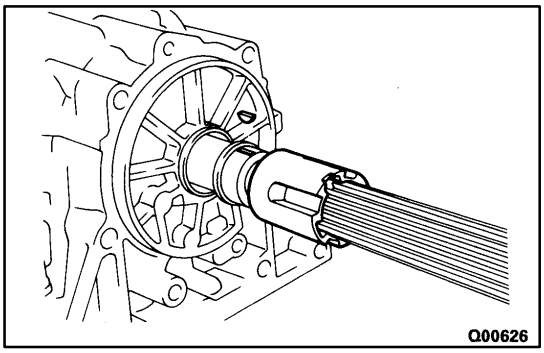

37. INSTALL SENSOR ROTOR AND KEY
SUPRA:

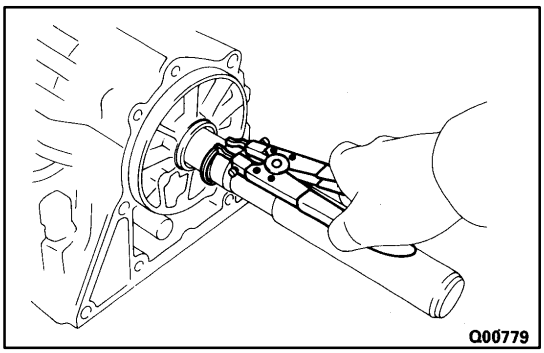

OTHERS:

(a) Using snap ring pliers, install the snap ring.

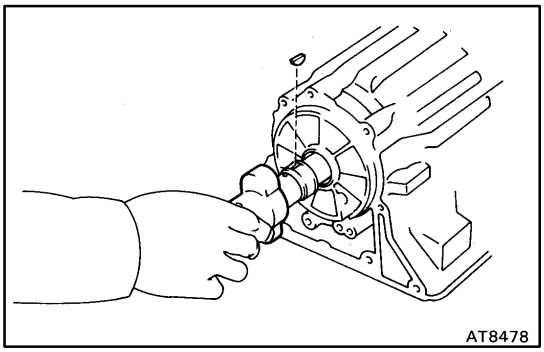

(b) Install the key on the output shaft.

(c) Align the groove of the sensor rotor with the key, install the sensor rotor.

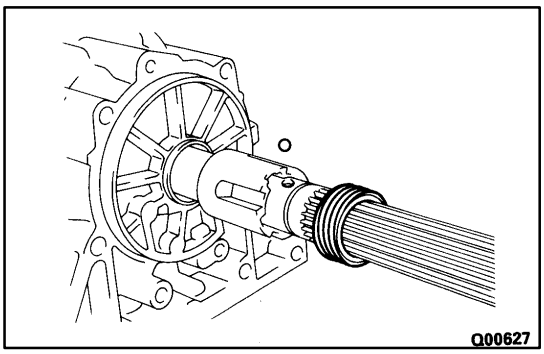

38. INSTALL SPEEDOMETER DRIVE GEAR AND BALL
SUPRA:

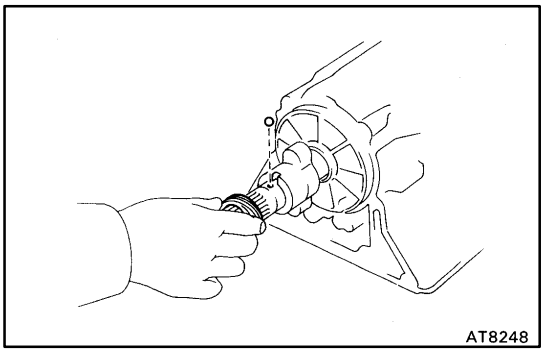

OTHERS:

(a) Install the lock ball on the output shaft.
(b) Align the groove of the drive gear with the ball, install the drive gear.

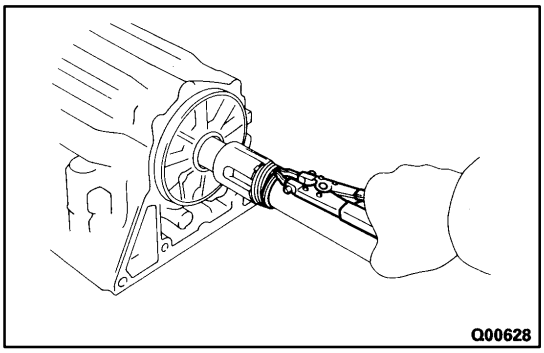

SUPRA:

(c) Using snap ring pliers, install the snap ring.

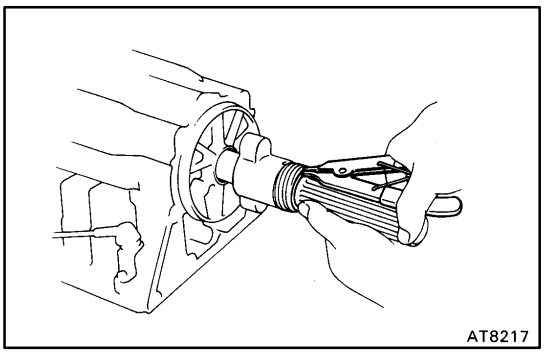

OTHERS:

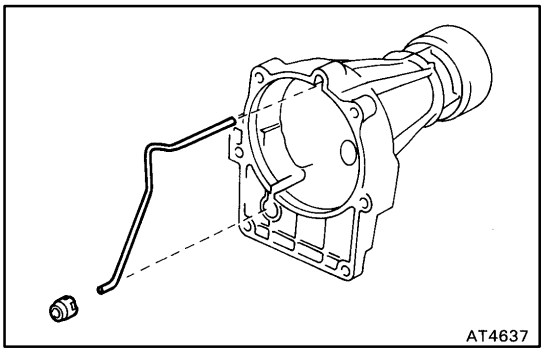

39. INSTALL EXTENSION HOUSING AND NEW GASKET

(a) Install the oil apply tube and a new gasket to the extension housing.
(b) Install the oil apply tube and a new gasket to the extension housing.

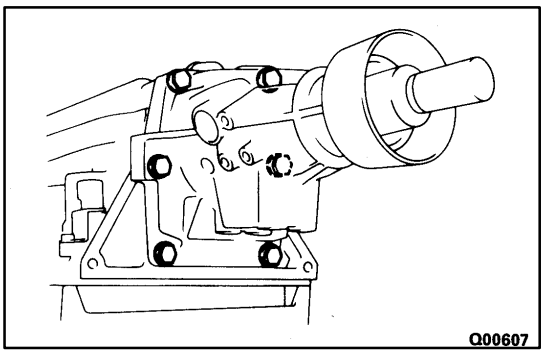

(c) Apply seal packing or equivalent to the 6 bolts.
Seal packing:
Part No. 08826-00070, THREE BOND 1324 or equivalent

(d) Install the extension housing with a new gasket to the case. install and torque the 6 bolts.
HINT: The 2 lower bolts are shorter.
Torque: 36 N·m (370 kgf·cm, 27 ft·lbf)

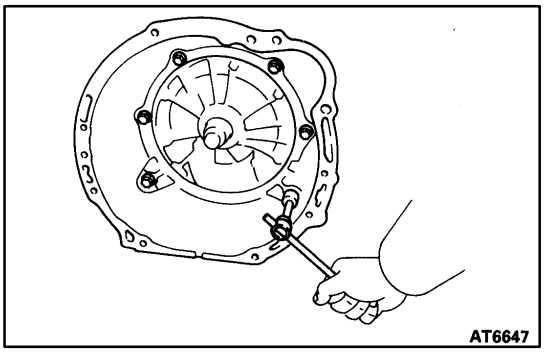

40. INSTALL TRANSMISSION HOUSING

(a) Clean the threads of the bolts and case with white gasoline.

(b) Apply seal packing or equivalent to the six bolts.
Seal packing:
Part No. 08826-00070, THREE BOND 1324 or equivalent

(c) Install and torque the 6 bolts.
Torque:
10 mm bolt 34 N·m (345 kgf·cm, 25 ft·lbf)
12 mm bolt 57 N·m (580 kgf·cm, 42 ft·lbf)

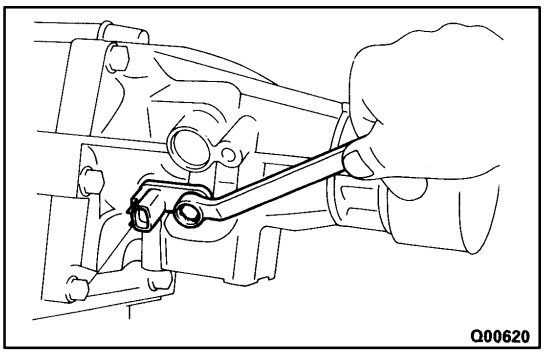

41. INSTALL NO.2 VEHICLE SPEED SENSOR

(a) Install the O-ring from the sensor.

(b) Install the No.2 vehicle speed sensor.

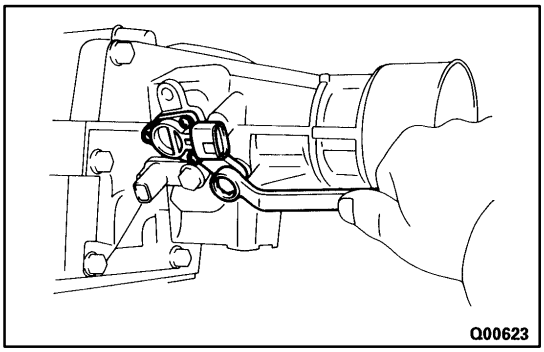

42. INSTALL NO.1 VEHICLE SPEED SENSOR

(a) Install the O-ring from the sensor.

(b) Install the No.1 vehicle speed sensor.

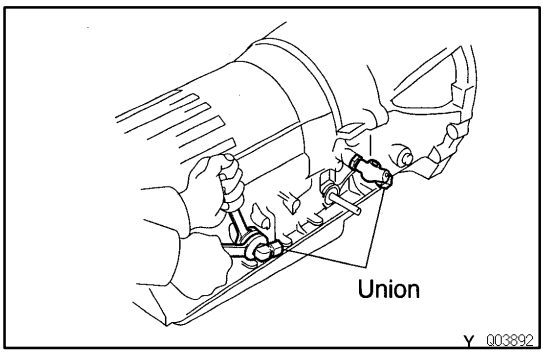

43. INSTALL UNION AND ELBOW

(a) Coat the new O-rings with ATF and install them to union and elbow.

(b) Install the front union.
Torque: 29 N·m (300 kgf·cm, 22 ft·lbf)

(c) Install the rear union.
Torque: 29 N·m (300 kgf·cm, 22 ft·lbf)

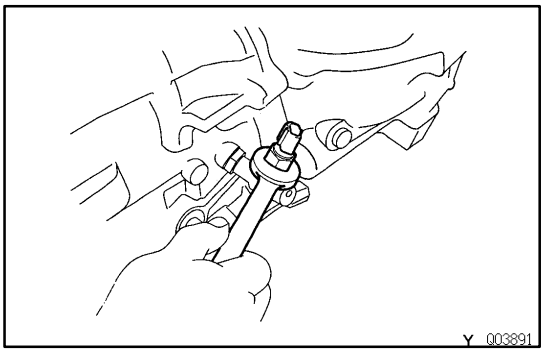

44. SUPRA, T100
INSTALL A/T OIL TEMPERATURE SENSOR

(a) Coat new O-ring with ATF and install it to the oil temperature sensor.

(b) Install the sensor.
Torque: 29 N·m (300 kgf·cm, 22 ft·lbf)

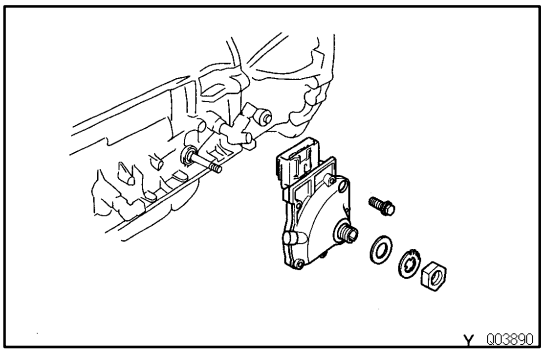

45. INSTALL PARK/NEUTRAL POSITION SWITCH

(a) Install the park/neutral position switch onto the manual valve lever shaft and temporarily tighten the adjusting bolt.

(b) Install the grommet and a new lock washer. Install and torque the nut.
Torque: 6.9 N·m (70 kgf·cm, 61 in.·lbf)

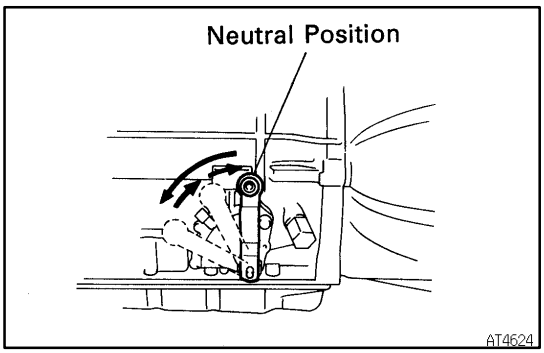

(c) Using the control shaft lever, fully turn the manual lever shaft back and return 2 notches. It is now in neutral.

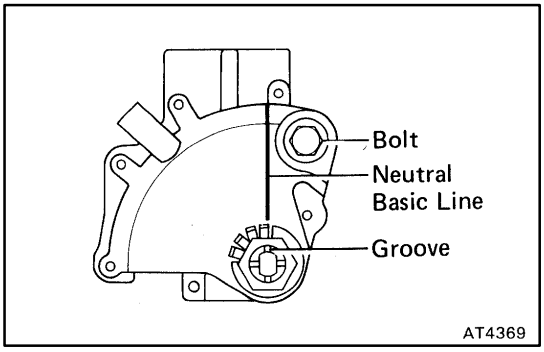

(d) Align the neutral basic line and the switch groove, and tighten the adjusting bolt.
Torque: 13 N·m (130 kgf·cm, 9 ft·lbf)

(e) Bend the tabs of the lock washer.
HINT: Bend at least 2 of the lock washer tabs.

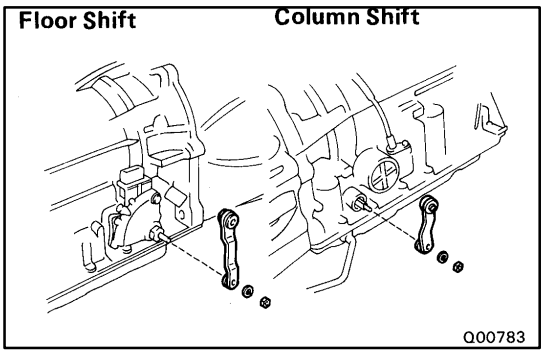

46. INSTALL CONTROL SHAFT LEVER
Torque: 16 N·m (160 kgf·cm, 12 ft·lbf)

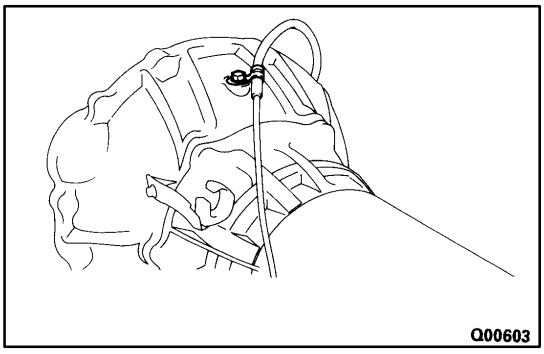

47. SUPRA, PREVIA:
INSTALL WIRE HARNESS CLAMP AND THROTTLE CABLE CLAMP

BODY ELECTRICAL SYSTEM

PRECAUTION

Take care to observe the doing precautions when performing inspections or removal and replacement of body electrical related parts.

HEADLIGHT SYSTEM

- Halogen bulbs have pressurized gas inside and require special handling. They can burst if scratched or dropped. Hold a bulb only by its plastic or metal case.
  Don't touch the glass part of a bulb with bare hands.

SRS (SUPPLEMENTAL RESTRAINT SYSTEM)

- Work must be started after 90 seconds from the time the ignition switch is turned to the "LOCK" position and the negative (–) terminal cable is disconnected from the battery.
- When disconnecting any of the connectors in the SRS, be sure to lock the ignition switch and disconnect the negative (–) terminal cable from the battery first. Since the connectors are twin lock type connectors, disconnect the connectors only after releasing the first stage lock.
- When connecting SRS connectors, be sure to lock them securely. (If the connectors are not locked securely, the system may not operate when needed.)
- Always store the steering wheel pad with the pad surface facing upward. (Storing the pad with its metallic surface up may lead to a serious accident if the SRS inflates for some reason.)
- When installing the spiral cable, be sure the vehicle is in the straight ahead condition and confirm that the spiral cable is in the neutral position when it is installed.
- INFORMATION LABELS (NOTICE) are attached to the periphery of the SRS components. Follow the NOTICE.

AUDIO SYSTEM

- If the negative (–) terminal cable is disconnected from the battery, the preset AM, FM 1 and FM 2 stations stored in memory are erased, so be sure to note the stations and reset them after the battery terminal is reconnected.
- If the negative (–) terminal cable is disconnected from the battery, the "ANTI–THEFT SYSTEM" will operate when the cable is reconnected, but the radio, tape player and CD player will not operate. Be sure to input the correct ID number so that the radio, tape player and CD player can be operated again.

MOBILE COMMUNICATION SYSTEM

- If the vehicle is equipped with a mobile communication system, refer to precautions in the IN section.

PREPARATION

SST (SPECIAL SERVICE TOOLS)

	09808–14010 Fuel Sender Gauge Tool Assy	
	09843–18020 Diagnosis Check Wire	
	09950–50010 Puller C Set	

RECOMMENDED TOOLS

	09082–00050 TOYOTA Electrical Tester Set	

EQUIPMENT

Voltmeter	
Ammeter	
Ohmmeter	
Test lead	
Thermometer	Engine oil level warning switch, Seat heater
Syphon	Brake fluid level warning switch
Oil bath	Engine oil level warning switch
Bulb (3.4 W)	Fuel sender gauge, Seat belt warning relay
Bulb (21 W)	Turn signal flasher relay
Dry cell battery	Fuel sender gauge
Heat light	Seat heater
Torque wrench	
Masking tape	Rear window defogger wire
Tin foil	Rear window defogger wire

SSM (SPECIAL SERVICE MATERIAL)

	DuPont Paste No. 4817 or equivalent	Rear window defogger

POWER SOURCE
PARTS LOCATION

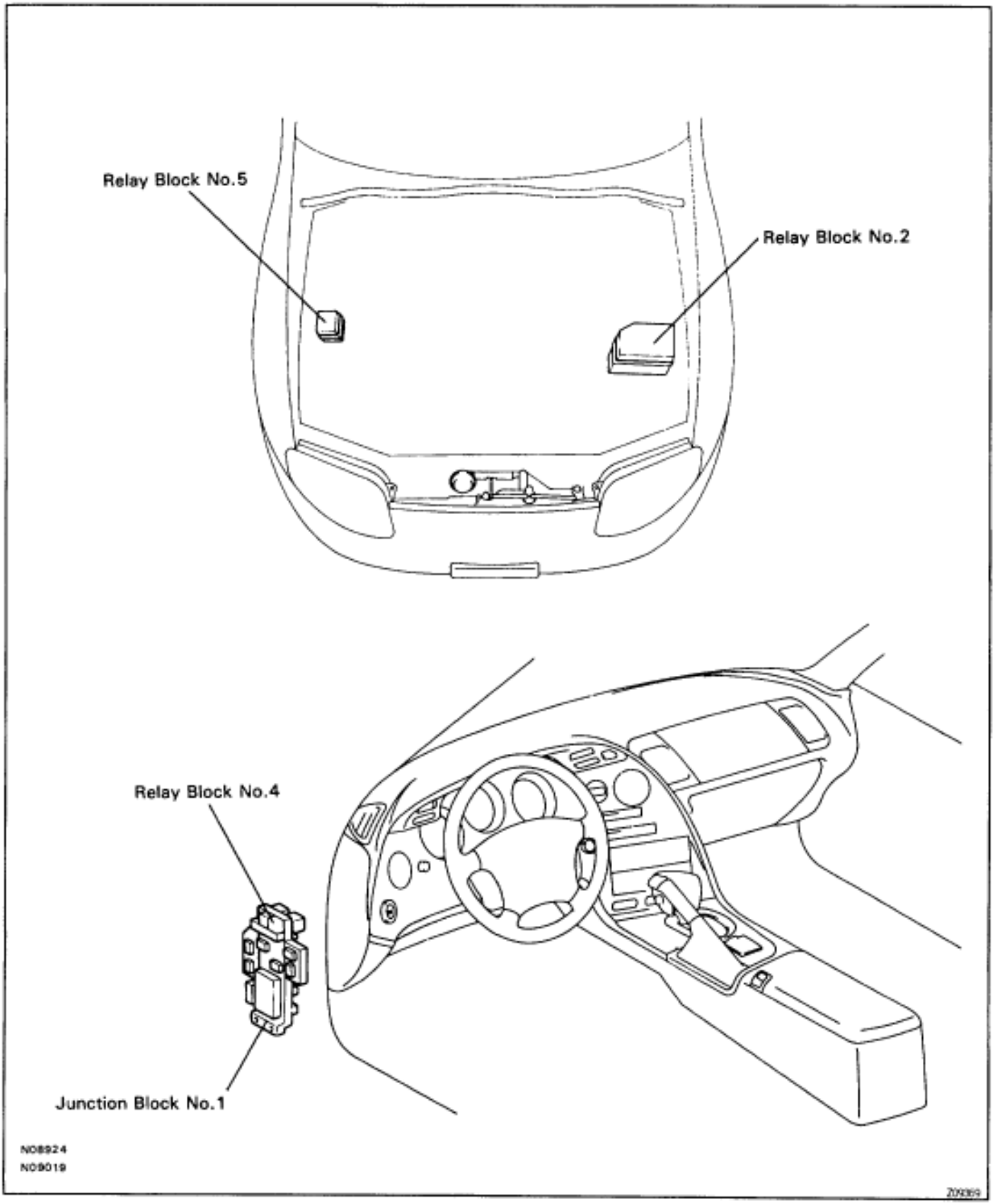

Relay Block No.2

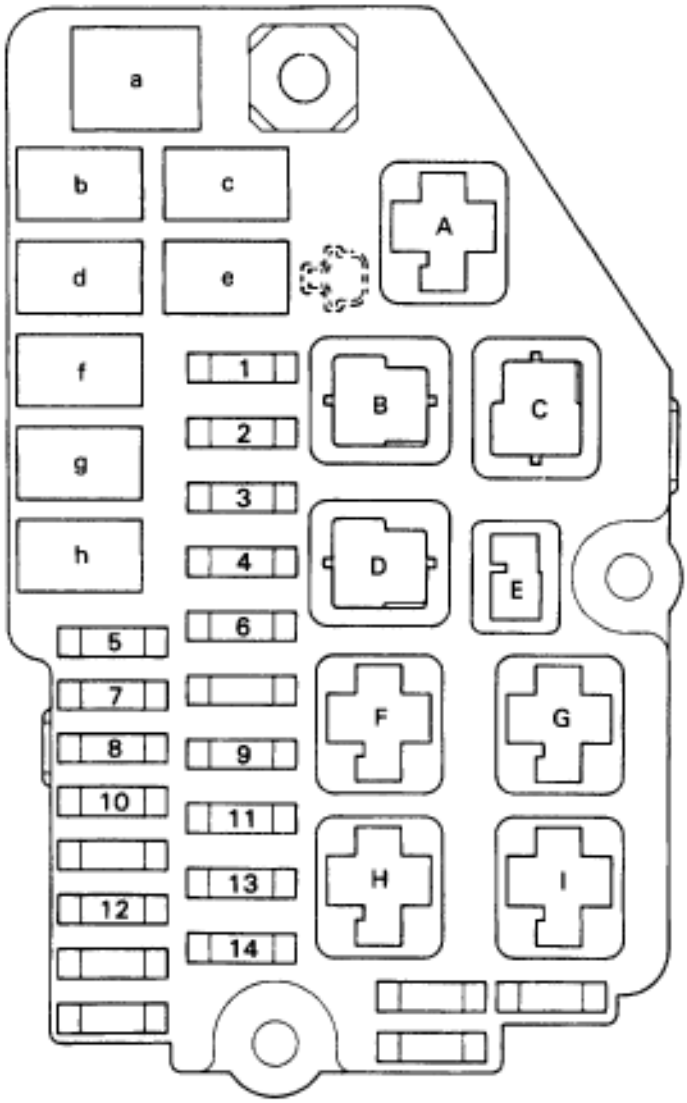

RELAY
- A. Starter Relay
- B. Heater Relay
- C. Headlight Relay
- D. Dimmer Relay (Daytime Running Light Relay No.2)
- E. Horn Relay
- F. EFI No.2 Relay
- G. EFI Main Relay
- H. Fog Light Relay
- I. A/C Magnetic Clutch Relay

FUSE

High Current Fuses

a. ALT		120 A

Medium Current Fuses

b. HTR		50 A
c. ABS No.2		30 A
d. FAN		30 A
e. MAIN		50 A
f. ABS No.1		60 A
g. AM1	USA	50 A
	CANADA	60 A
h. POWER		60 A

Fuses

1. EFI No.2	30 A
2. EFI No.1	30 A
3. AM2	30 A
4. FOG	15 A
5. USA: HEAD (RH)	15 A
CANADA: HEAD (RH-LWR)	15 A
6. HAZ-HORN	15 A
7. USA: HEAD (LH)	15 A
CANADA: HEAD (LH-LWR)	15 A
8. HEAD (RH-UPR)	15 A
9. TRAC	7.5 A
10. HEAD (LH-UPR)	15 A
11. ALT-S	7.5 A
12. DRL	7.5 A
13. DOME	7.5 A
14. RAD No.1	20 A

N08527

Junction Block No.1

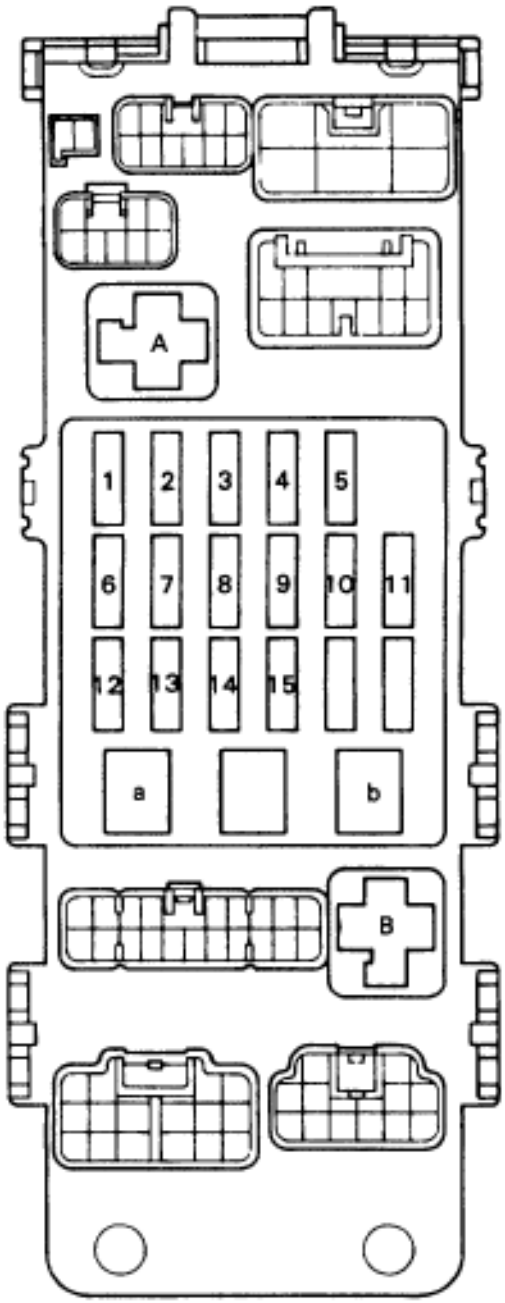

RELAY
A. Taillight Relay
B. Power Main Relay

FUSE
Medium Current Fuses

a. DOOR	30 A
b. DEFOG	30 A

Fuses

1. WIPER	20 A
2. HTR	7.5 A
3. SEAT-HTR	15 A
4. ST	7.5 A
5. IGN	7.5 A
6. PANEL	10 A
7. MIR-HTR	10 A
8. TURN	7.5 A
9. STOP	15 A
10. CIG	15 A
11. RAD No.2	7.5 A
12. TAIL	10 A
13. ECU-IG	10 A
14. GAUGE	10 A
15. ECU-B	10 A

Relay Block No.4

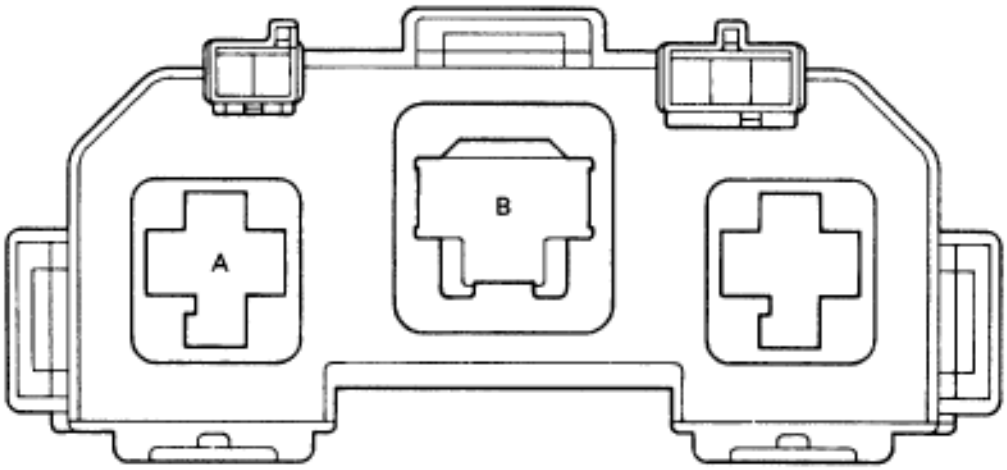

RELAY
A. Rear Window Defogger Relay
B. Turn Signal Flasher

Relay Block No.5

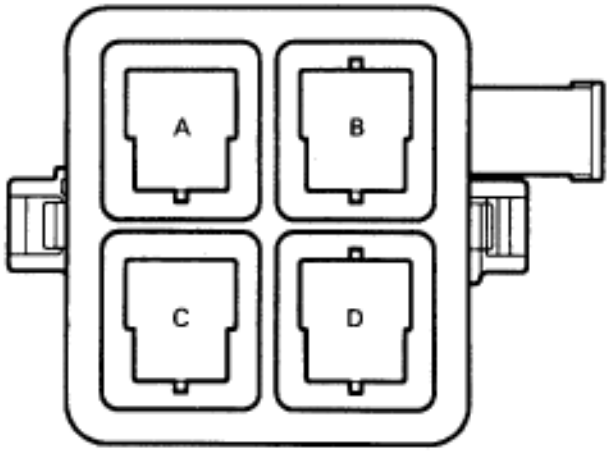

RELAY
A. Traction Solenoid Relay
B. Traction Motor Relay
C. ABS Solenoid Relay
D. ABS Motor Relay

N08700
N08701

209101

IGNITION SWITCH

PARTS LOCATION

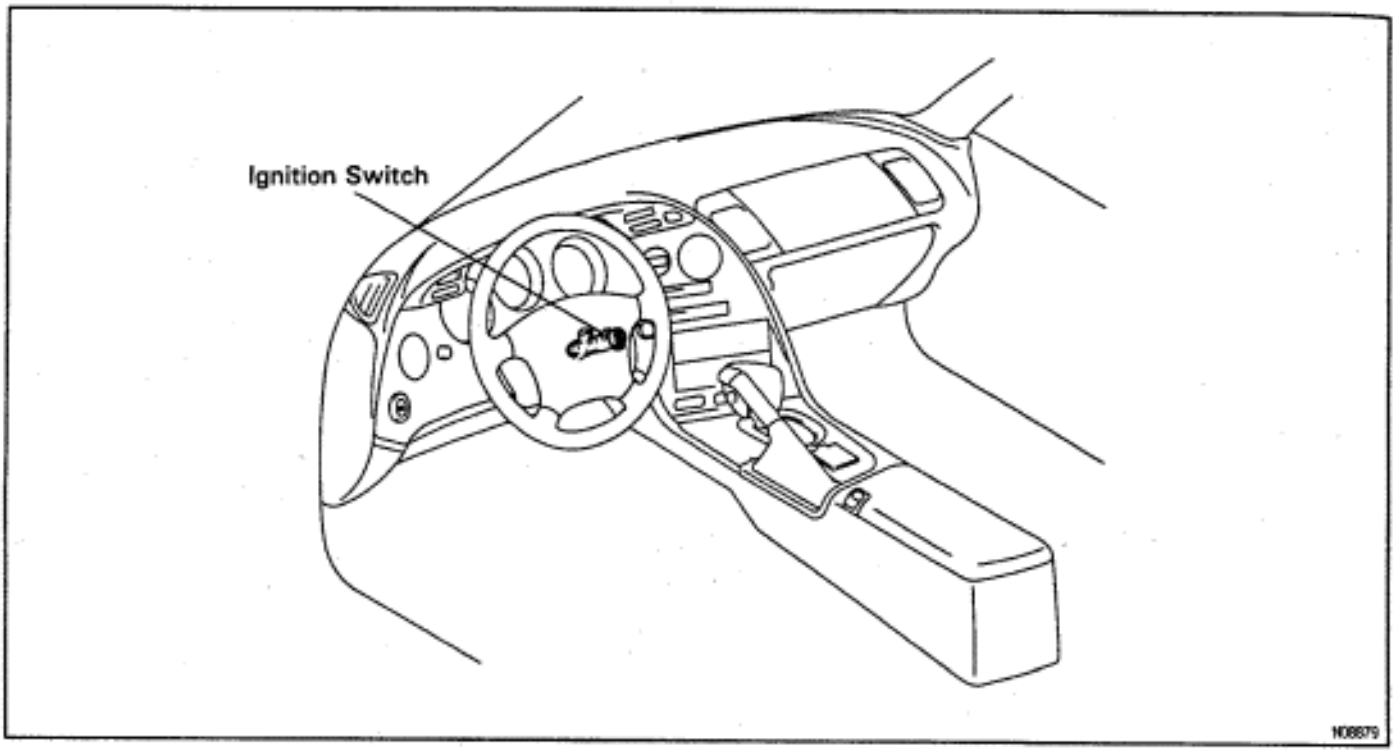

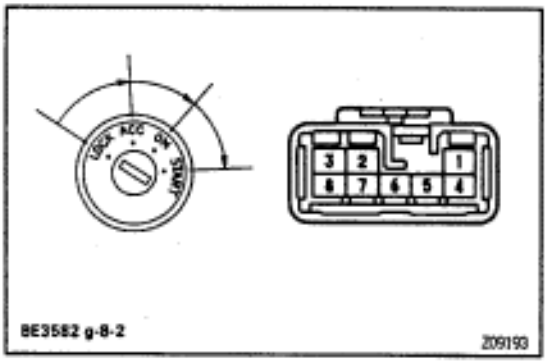

IGNITION SWITCH INSPECTION

INSPECT SWITCH CONTINUITY

Switch position	Tester connection to terminal number	Specified condition
Lock	–	No continuity
ACC	5 – 7	Continuity
ON	4 – 5 – 7 2 – 3	Continuity
START	4 – 7 – 8 1 – 2 – 3	Continuity

If continuity is not as specified, replace the switch

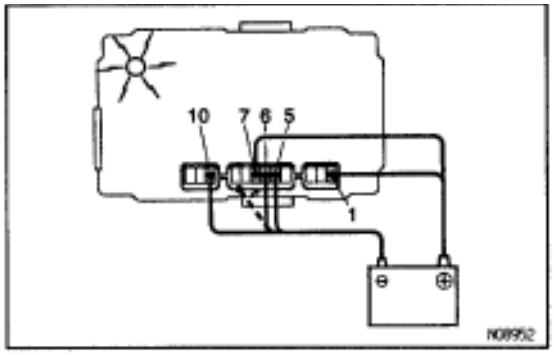

KEY UNLOCK WARNING INSPECTION

1. INSPECT INTEGRATION RELAY OPERATION

(a) Connect the positive (+) lead from the battery to terminal 1, the negative (–) lead to terminals 5 and 10.

(b) Check that the buzzer sounds when the negative (–) lead from the battery is connected to terminal 6.
If operation is not as specified, replace the relay.

2. INSPECT RELAY CIRCUIT

See page BE–18

HEADLIGHT AND TAILLIGHT SYSTEM

PARTS LOCATION

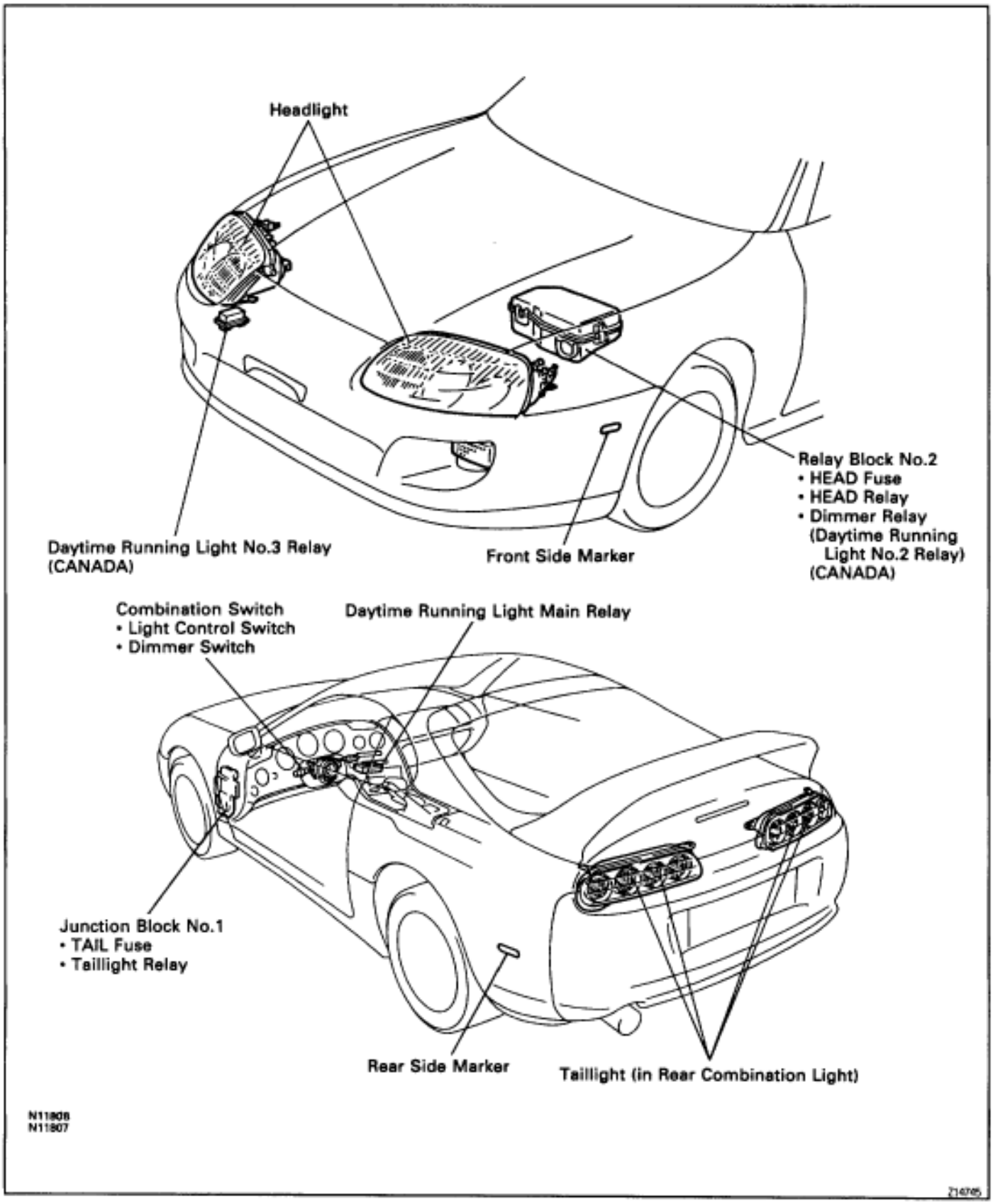

TROUBLESHOOTING

The table below will be useful for you in troubleshooting these electrical problems. The most likely causes of the malfunction are shown in the order of their probability. Inspect each part in the order shown, and replace the part when it is found to be faulty.

USA:

Trouble	Parts name	(See page)
Headlight does not light (Taillight is normal)	1. FL MAIN 2. HEAD Fuse (LH, RH) 3. Headlight Control Relay 4. Headlight Dimmer Switch 5. Light Control Switch 6. Integration Relay 7. Wire Harness 8. Headlight Bulb	 (BE–5) (BE–16) (BE–15) (BE–15) (BE–17)
Headlight does not light (Taillight does not light up)	1. FL MAIN 2. Light Control Switch 3. Integration Relay 4. Wire Harness 5. Headlight Bulb	 (BE–15) (BE–17)
Only one side light does not light	1. HEAD Fuse (LH, RH) 2. Headlight Bulb 3. Wire Harness	(BE–5)
”Lo–Beam” does not light	1. Headlight Dimmer Switch 2. Wire Harness	(BE–15)
”Hi–Beam” does not light	1. Headlight Dimmer Switch 2. Wire Harness	(BE–15)
”Flash” does not light	1. Headlight Dimmer Switch 2. Wire Harness	(BE–15)

CANADA:

Trouble	Parts name	(See page)
Headlight does not light (Taillight is normal)	1. FL MAIN 2. Headlight Control Relay 3. Daytime Running Light Relay 4. Daytime Running Light No.2 and No.3 Relay 5. Headlight Dimmer Switch 6. Light Control Switch 7. Integration Relay 8. Wire Harness 9. Headlight Bulb	 (BE–18) (BE–19) (BE–15) (BE–15) (BE–17)
Headlight does not light (Taillight does not light up)	1. FL MAIN 2. Light Control Switch 3. Daytime Running Light Relay 4. Daytime Running Light No.2 and No.3 Relay 5. Integration Relay 6. Wire Harness	 (BE–15) (BE–18) (BE–19) (BE–17)

Trouble	Parts name	(See page)
Only one side light does not light	1. Headlight Bulb 2. Wire Harness	
”Lo–Beam” does not light (ALL)	1. Headlight Control Relay 2. Wire Harness	(BE–16)
”Lo–Beam” does not light (ONE SIDE)	1. HEAD LH–LWR Fuse 2. HEAD RH–LWR Fuse 3. Headlight Bulb 4. Wire Harness	(BE–5) (BE–5)
”Hi–Beam” does not light (ALL)	1. Headlight Dimmer Switch 2. Daytime Running Light Relay 3. Daytime Running Light No.2 and No.3 Relay 4. Wire Harness	(BE–15) (BE–18) (BE–19)
”Hi–Beam” does not light (ONE SIDE)	1. HEAD LH–UPR Fuse 2. HEAD RH–UPR Fuse 3. Headlight Bulb 4. Wire Harness	(BE–5) (BE–5)
”Flash” does not light	1. Headlight Dimmer Switch 2. Daytime Running Light Relay 3. Daytime Running Light No.2 and No.3 Relay 4. Wire Harness	(BE–15) (BE–18) (BE–19)
”Auto Turn–off System” dose not operate	1. Integration Relay 2. GAUGE Fuse 3. Wire Harness 4. Door Courtesy Switch (driver’s)	(BE–17) (BE–6) (BE–28)
Headlight does not light with light control SW in HEAD.	1. Integration Relay 2. Light Control Switch 3. Daytime Running Light Relay 4. Daytime Running Light No.2 and No.3 Relay 5. Wire Harness	(BE–17) (BE–15) (BE–18) (BE–19)
Headlight does not go out with light control SW in OFF	1. Headlight Control Relay 2. Wire Harness	(BE–16)
Taillight does not light with light control SW in TAIL	1. Taillight Control Relay 2. Integration Relay 3. Light Control Switch 4. Wire Harness	(BE–16) (BE–17) (BE–15)
Taillight does not go out with light control SW in OFF“	1. Taillight Control Relay 2. Integration Relay 3. Light Control Switch 4. Wire Harness	(BE–16) (BE–17) (BE–15)
Headlight and Taillight do not light with engine running and light control SW in OFF	1. GAUGE Fuse 2. Daytime Running Light Relay 3. Daytime Running Light No.2 and No.3 Relay 4. Wire Harness 5. Generator L Terminal 6. Parking Brake Switch	(BE–6) (BE–18) (BE–19) (BE–52)

HEADLIGHT AIM ADJUSTMENT

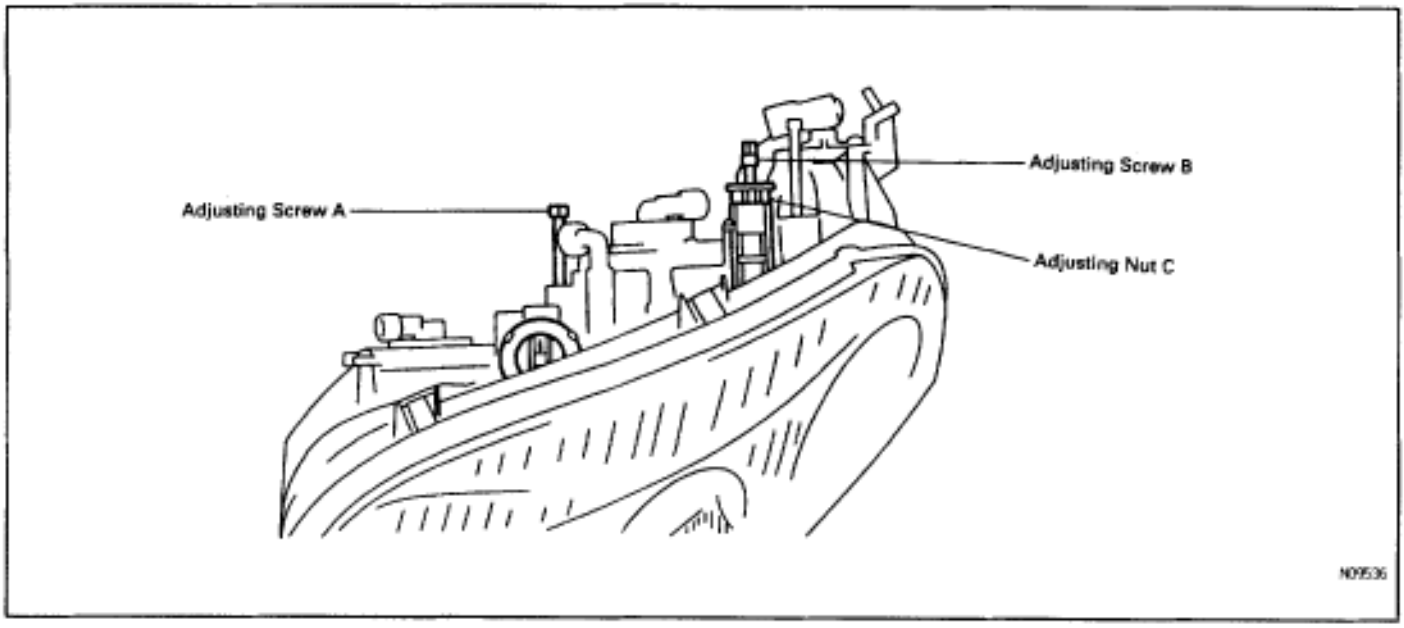

Adjusting headlight aim only

1. INSPECT HEADLIGHT AIM

Do the following before inspection.

- Make sure the body around the headlight is not deformed.
- Park the vehicle on a level spot.
- The driver gets into the driver's seat and puts the vehicle in a state ready for driving (with a full tank).
- Bounce the vehicle several times.

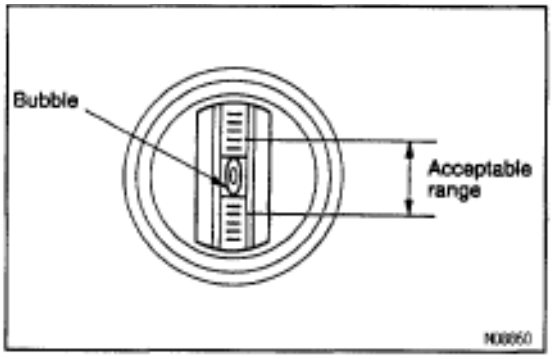

2. ADJUST HEADLIGHT VERTICAL ALIGNMENT

If the bubble is outside the acceptable range of the beam angle gauge, adjust it using adjusting screw A.

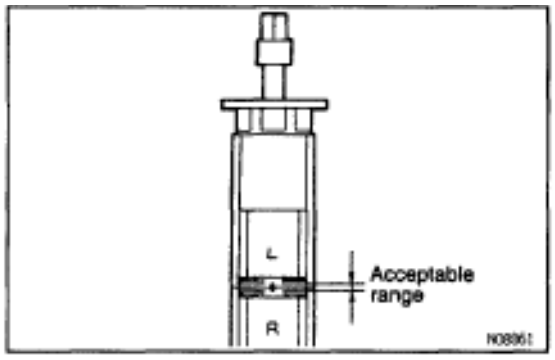

3. ADJUST HEADLIGHT HORIZONTAL ALIGNMENT

If the "0" moves away from the mark beyond the acceptable range, adjust the "0" back to the mark using adjusting screw B.

Replacing headlight

1. REPLACE HEADLIGHT

2. INSPECT HEADLIGHT AIM

Do the following before inspection.

- Make sure the body around the headlight is not deformed.
- Park the vehicle on a level spot.
- The driver gets into the driver's seat and puts the vehicle in a state ready for driving (with a full tank).
- Bounce the vehicle several times.

3. ADJUST HEADLIGHT IN VERTICAL ALIGNMENT

(a) Using adjusting screw A, adjust the headlight aim to within the specifications.

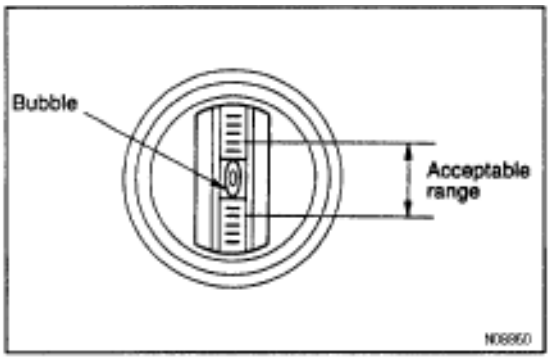

(b) Make sure the gauge bubble is within the acceptable range.
HINT: If the gauge bubble is outside the acceptable range, check that the vehicle is parked on a level spot. Readjust the headlight aim after parking the vehicle on a level spot.

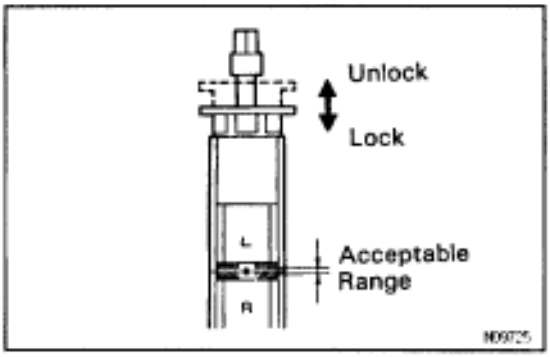

4. ADJUST HEADLIGHT IN HORIZONTAL ALIGNMENT

(a) Using adjusting screw B, adjust the headlight aim to within the specifications.

(b) Using adjusting nut C, adjust the "0" back to the mark.
HINT: For adjustment, pull nut C to the rear vehicle to free it. After adjustment, check that the nut C is locked in.

COMBINATION SWITCH REMOVAL AND INSTALLATION

See SR–Section

COMBINATION SWITCH DISASSEMBLY AND ASSEMBLY

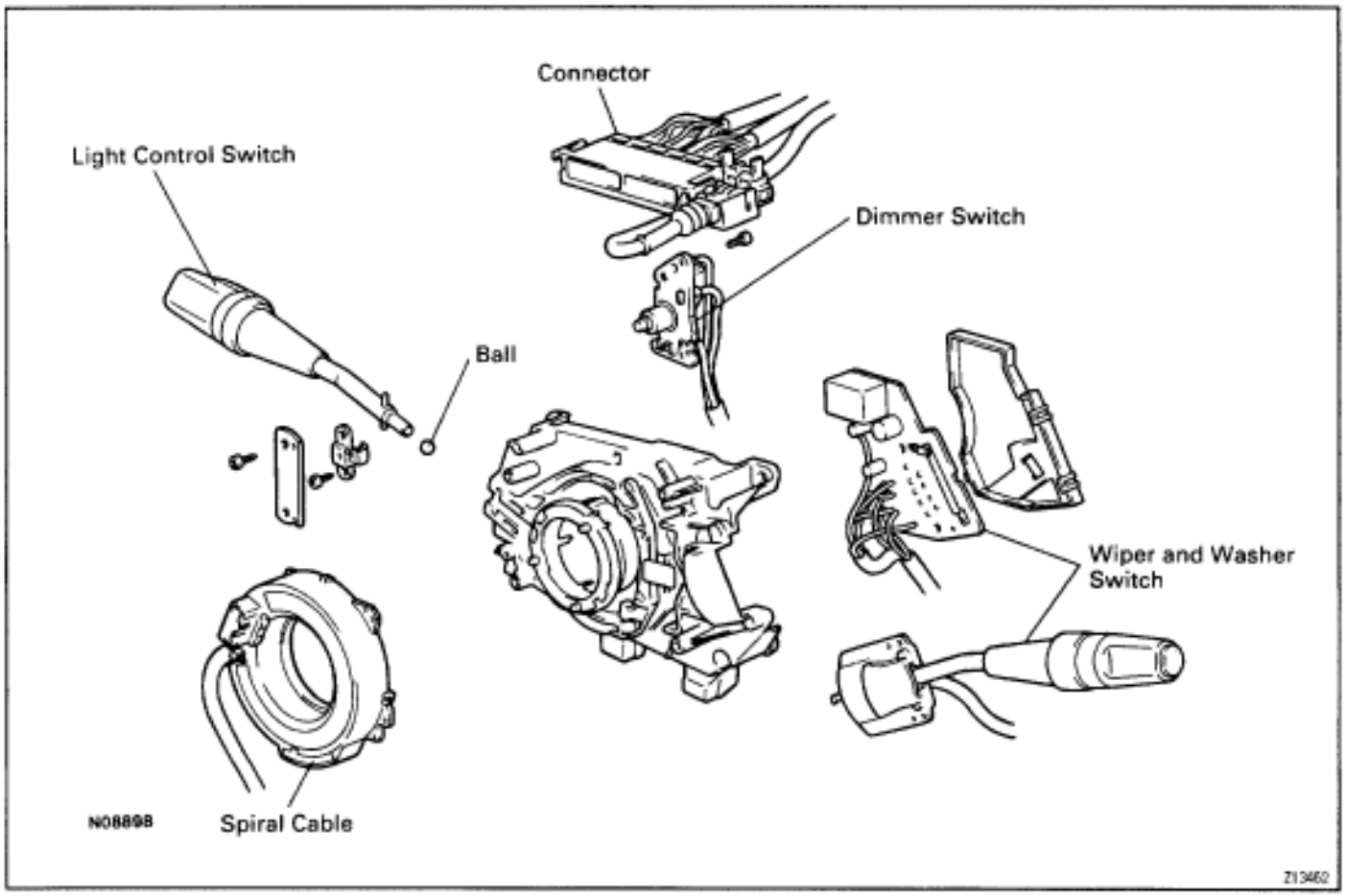

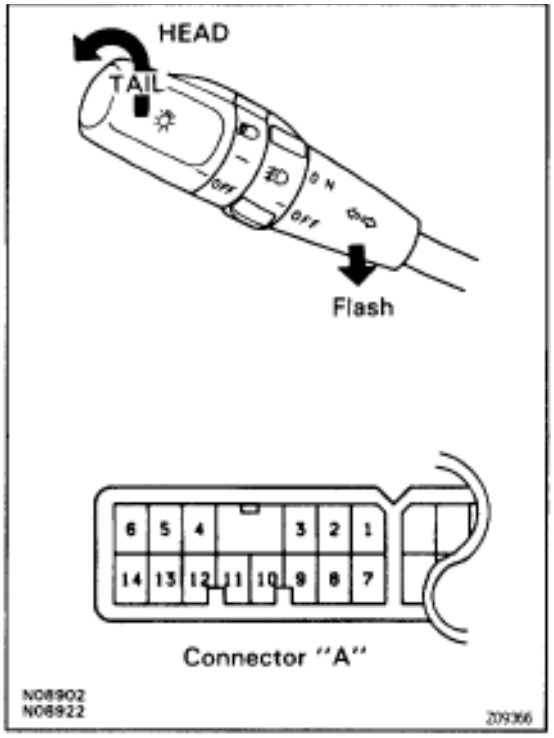

COMBINATION SWITCH INSPECTION

1. INSPECT LIGHT CONTROL SWITCH CONTINUITY

Switch position	Tester connection to terminal number	Specified condition
OFF	–	No continuity
TAIL	A2–A11	Continuity
HEAD	A2–A11–A13	Continuity

If continuity is not as specified, replace the switch.

2. INSPECT DIMMER SWITCH CONTINUITY

Switch position	Tester connection to terminal number	Specified condition
Flash	A9–A12–A14	Continuity
Low beam	A3–A9	Continuity
High beam	A9–A12	Continuity

If continuity is not as specified, replace the switch.

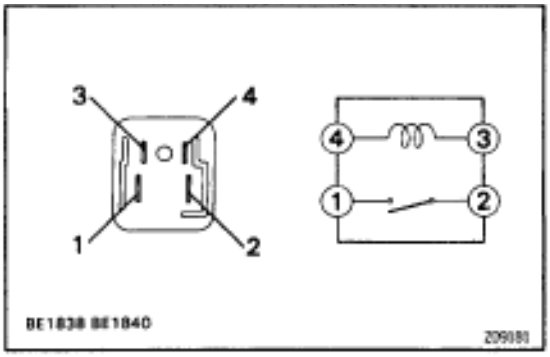

HEADLIGHT CONTROL RELAY INSPECTION

INSPECT RELAY CONTINUITY

Condition	Tester connection to terminal number	Specified condition
Constant	3–4	Continuity
Apply B+ between Terminal 3 and 4.	1–2	Continuity

If continuity is not as specified, replace the relay.

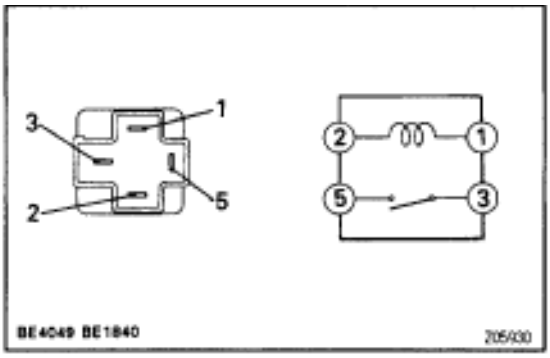

TAILLIGHT RELAY INSPECTION

INSPECT RELAY CONTINUITY

Condition	Tester connection to terminal number	Specified condition
Constant	1–2	Continuity
Apply B+ between Terminals 1 and 2.	3–5	Continuity

If continuity is not as specified, replace the relay.

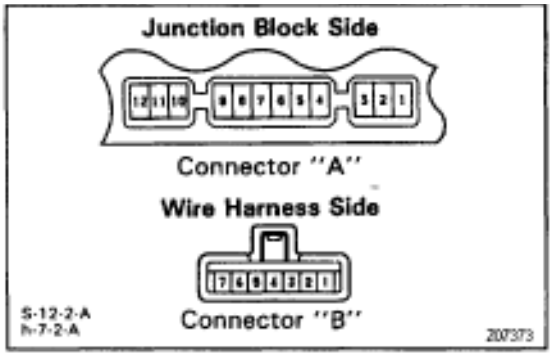

INTEGRATION RELAY INSPECTION

INSPECT RELAY CIRCUIT

Light Auto Turn Off System

Remove the relay from junction block and inspect the connectors on the wire harness and junction block side, as shown in the chart.

Tester connection to terminal number	Condition	Specified condition
A6–Ground	Driver's door courtesy switch OFF	No continuity
A6–Ground	Driver's door courtesy switch ON	Continuity
A10–Ground	Constant	Continuity
B1–Ground	Light control switch position OFF or TAIL	No continuity
B1–Ground	Light control switch position HEAD	Continuity
B4–Ground	Light control switch position OFF	No continuity
B4–Ground	Light control switch position TAIL or HEAD	Continuity
A1–Ground	Constant	Battery positive voltage
A7–Ground	Ignition switch position LOCK or ACC	No voltage
A7–Ground	Ignition switch position ON	Battery positive voltage
B2–Ground	Constant	Battery positive voltage
B3–Ground	Constant	Battery positive voltage

If the circuit is as specified, try replacing the relay with a new one.

If the circuit is not as specified, inspect the circuits connected to other parts.

DOOR COURTESY SWITCH INSPECTION

See page BE–28

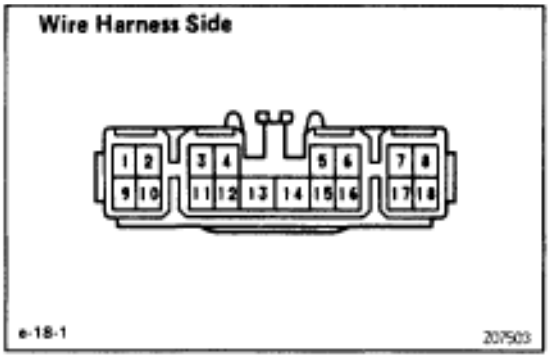

DAYTIME RUNNING LIGHT MAIN RELAY INSPECTION

INSPECT RELAY CIRCUIT

Disconnect the connector from relay and inspect the connector on wire harness side, as shown.

Tester connection to terminal number	Condition	Specified condition
5–Ground	Headlight dimmer switch position Low beam or high beam	No continuity
5–Ground	Headlight dimmer switch position Flash	Continuity
8–Ground	Parking brake switch position OFF	No continuity
8–Ground	Parking brake switch position ON	Continuity
16–Ground	Headlight dimmer switch position Low beam	No continuity
16–Ground	Headlight dimmer switch position Flash or High beam	Continuity
13–Ground	Constant	Continuity
18–Ground	Constant	Continuity
2–Ground	Ignition switch position LOCK or ACC	No voltage
2–Ground	Ignition switch position ON	Battery positive voltage
11–Ground	Engine Stop	No voltage
11–Ground	Engine Running	Battery positive voltage
15–Ground 17–Ground	Constant	Battery positive voltage

If the circuit is as specified, trying replacing the relay with a new one. If the circuit is not as specified, inspect the circuit connected to other parts.

PARKING BRAKE SWITCH INSPECTION

See page BE–52

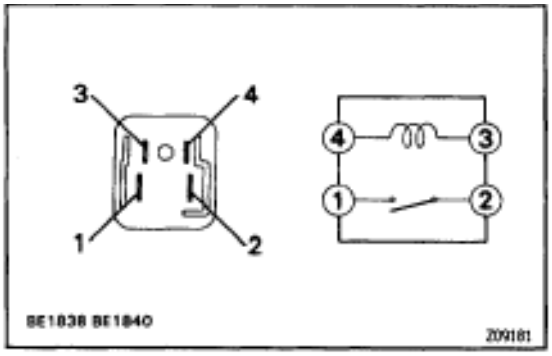

DAYTIME RUNNING LIGHT RELAY No.2 INSPECTION

INSPECT RELAY CONTINUITY

Condition	Tester connection to terminal number	Specified condition
Constant	3–4	Continuity
Apply B+ between terminals 3 and 4.	1–2	Continuity

If continuity is not as specified, replace the relay.

DAYTIME RUNNING LIGHT RELAY No.3 INSPECTION

INSPECT RELAY CONTINUITY

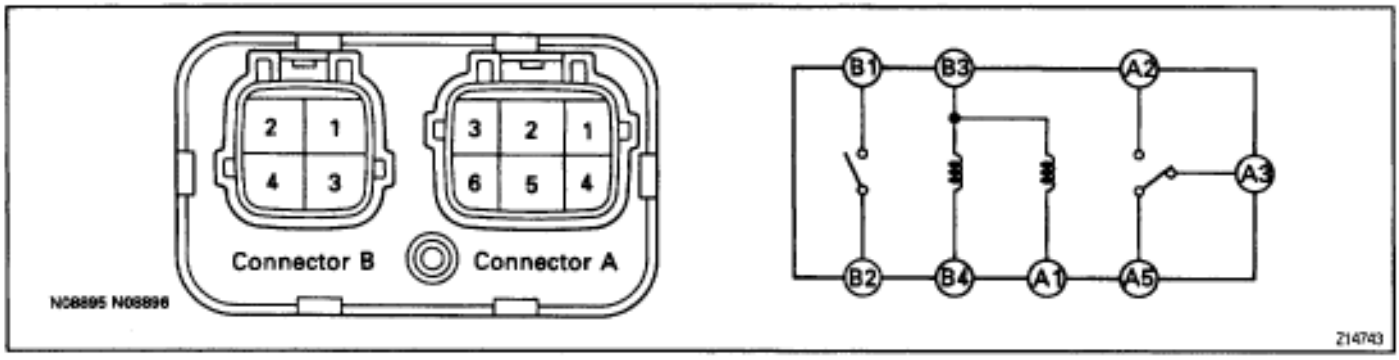

Tester connection to terminal number	Condition	Specified condition
A1–B3	Constant	Continuity
A3–A5	Constant	Continuity
B3–B4	Constant	Continuity
A2–A5	Apply battery positive voltage between terminal A1 and B3.	Continuity
B1–B2	Apply battery positive voltage between terminal B3 and B4.	Continuity

If continuity is not as specified, replace the relay.

TURN SIGNAL AND HAZARD WARNING SYSTEM

PARTS LOCATION

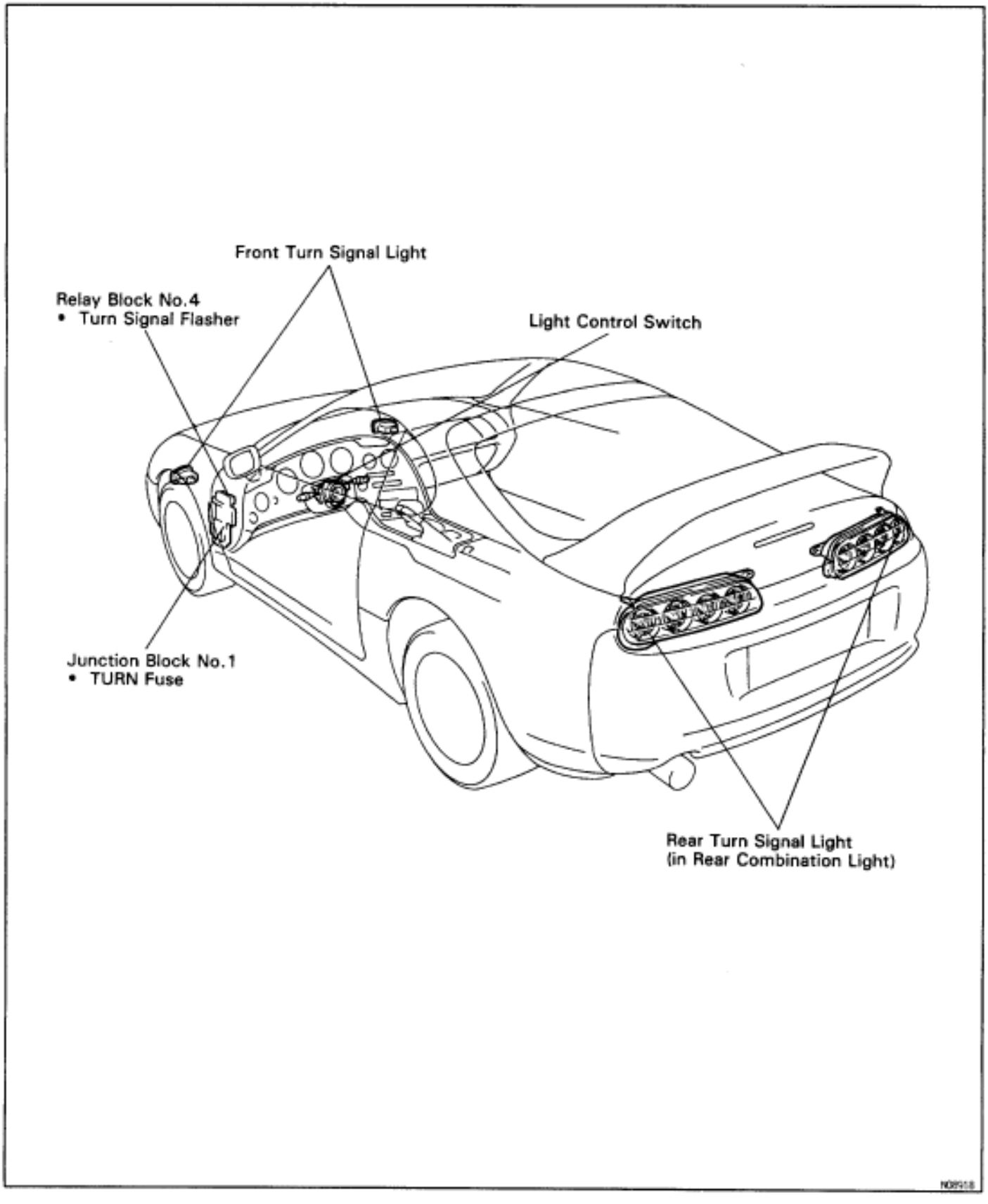

TROUBLESHOOTING

The table below will be useful for you in troubleshooting these electrical problems. The most likely causes of the malfunction are shown in the order of their probability. Inspect each part in the order shown, and replace the part when it is found to be faulty.

Trouble	Parts name	(See page)
"Hazard" and "Turn" do not light up	1. Hazard Warning Switch 2. Turn Signal Flasher 3. Wire Harness	(BE–22) (BE–22)
The flashing frequency is abnormal	1. Bulb 2. Turn Signal Flasher 3. Wire Harness	(BE–22)
Hazard warning light does not light up (Turn is normal)	1. HAZ–HORN Fuse 2. Wire Harness	(BE–5)
Hazard warning light does not light up in one direction	1. Hazard Warning Switch 2. Wire Harness	(BE–22)
*1 Turn signal does not light up	1. Ignition Switch 2. TURN Fuse 3. Turn Signal Switch 4. Wire Harness	(BE–8) (BE–6) (BE–21)
*2 Turn signal does not light up	1. TURN Fuse 2. Turn Signal Switch 3. Wire Harness	(BE–6) (BE–21)
Turn signal does not light up in one direction	1. Turn Signal Switch 2. Wire Harness	(BE–21)
Only one bulb does not light up	1. Bulb 2. Wire Harness	

*1: Combination Meter, Wiper and Washer do not operate.
*2: Combination Meter, Wiper and Washer are normal.

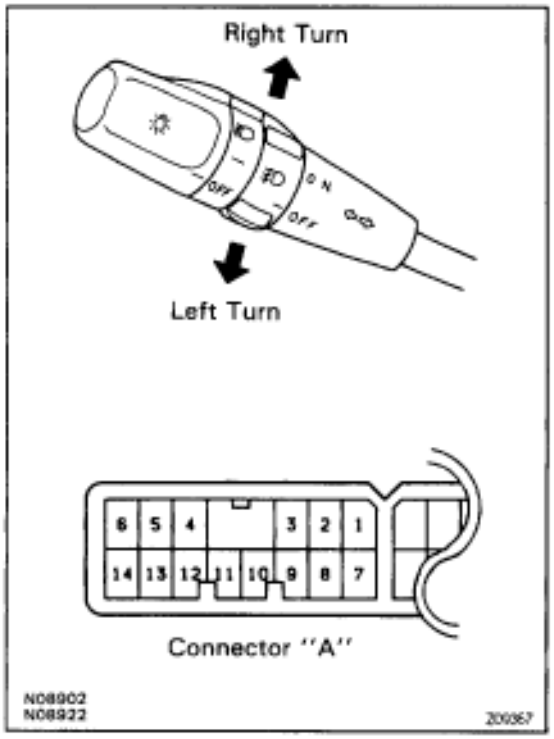

TURN SIGNAL SWITCH INSPECTION

INSPECT SWITCH CONTINUITY

Switch position	Tester connection to terminal number	Specified condition
Left turn	A1 – A5	Continuity
Neutral	–	No continuity
Right turn	A1 – A8	Continuity

If continuity is not as specified, replace the switch.

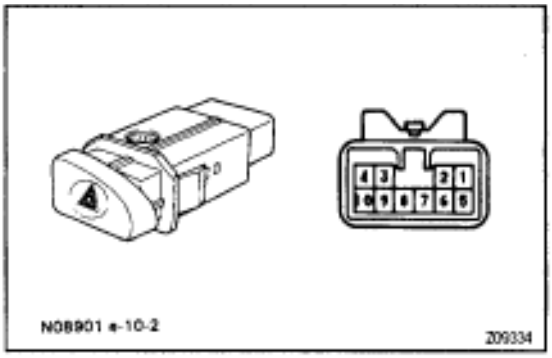

HAZARD WARNING SWITCH INSPECTION

INSPECT SWITCH CONTINUITY

Condition	Tester connection to terminal number	Specified condition
Switch OFF	7–10	Continuity
Switch ON	7–8 4–5–6–9	Continuity
Illumination circuit	2–3	Continuity

If continuity is not as specified, replace the switch.

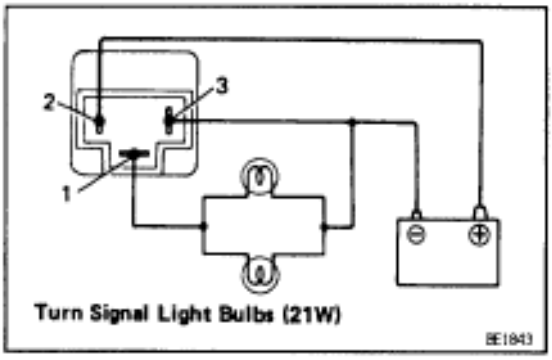

TURN SIGNAL FLASHER INSPECTION

INSPECT FLASHER OPERATION

(a) Connect the terminal 2 to battery positive (+) terminal and the terminal 3 to battery negative (–) terminal.

(b) Connect the 2 turn signal light bulbs parallel to each other to terminals 1 and 3, check that the bulbs flash.
HINT: The turn signal lights should flash between 60 and 120 times per minute.

FOG LIGHT SYSTEM
PARTS LOCATION

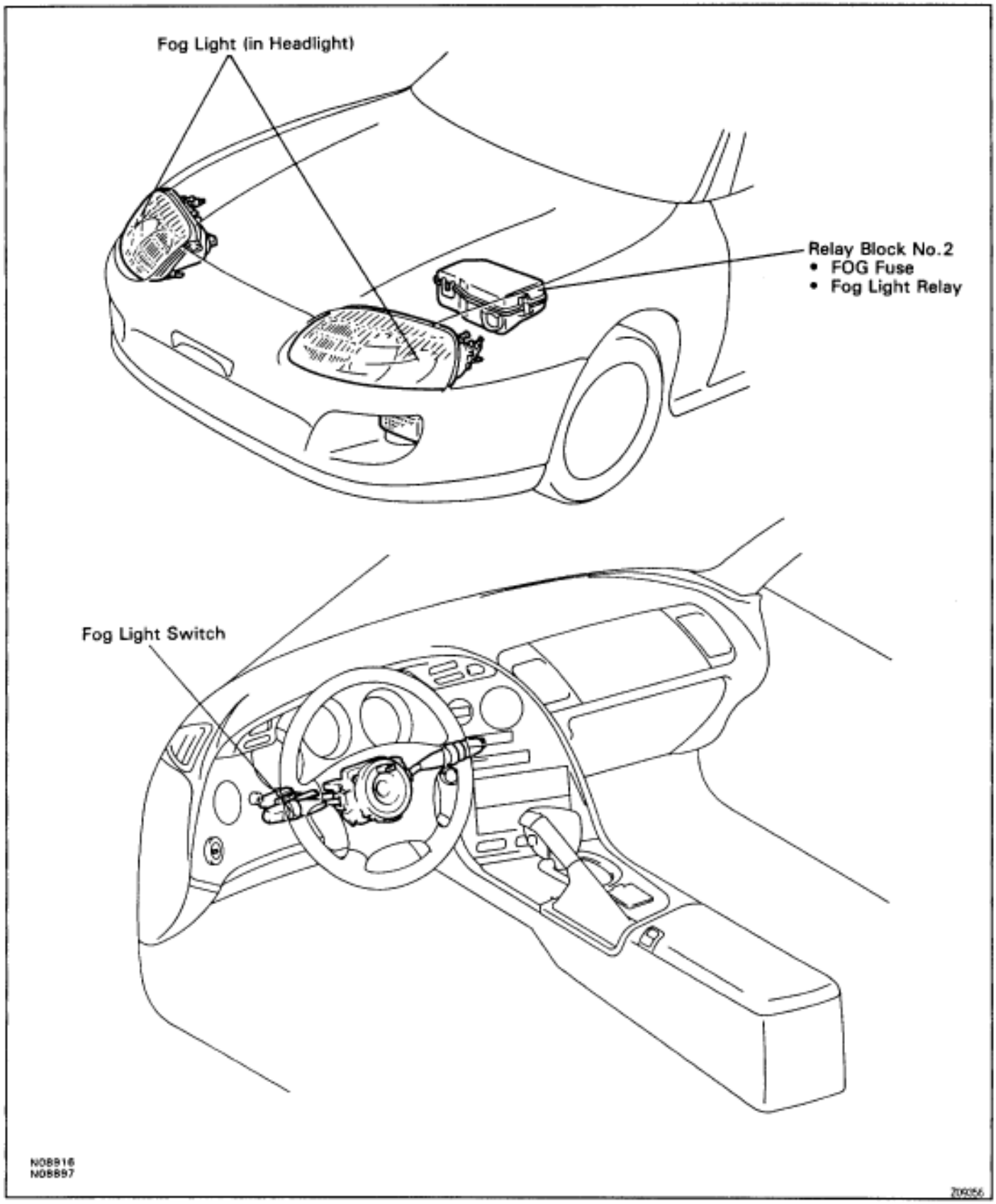

TROUBLESHOOTING

The table below will be useful for you in troubleshooting these electrical problems. The most likely causes of the malfunction are shown in the order of their probability. Inspect each part in the order shown, and replace the part when it is found to be faulty.

Trouble	Parts name	(See page)
Fog light does not light with light control SW HEAD (Headlight is normal).	1. HEAD Fuse 2. Fog Light Relay 3. Fog Light Switch 4. Wire Harness	(BE–5) (BE–25) (BE–24)
Fog light does not light with light control SW HEAD (Headlight does not light).	1. Inspect Headlight system 2. Wire Harness	(BE–10)
Only one light does not light.	1. Bulb 2. Wire Harness	

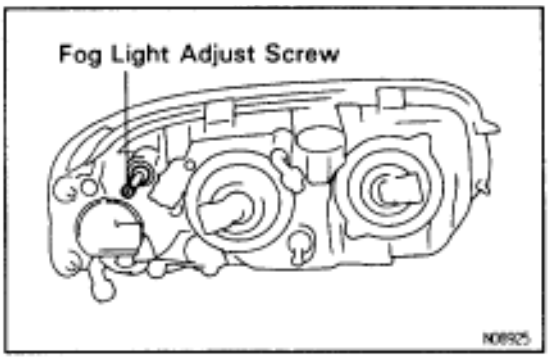

FOG LIGHT AIM ADJUSTMENT

Adjust Screw: Vertical Direction

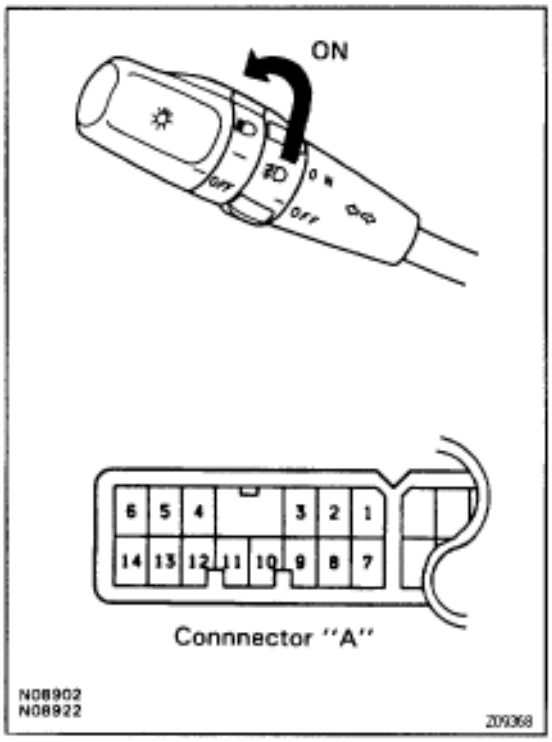

FOG LIGHT SWITCH INSPECTION

INSPECT SWITCH CONTINUITY

Switch position	Tester connection to terminal number	Specified condition
OFF	–	No continuity
ON	A6–A7	Continuity

If continuity is not as specified, replace the switch.

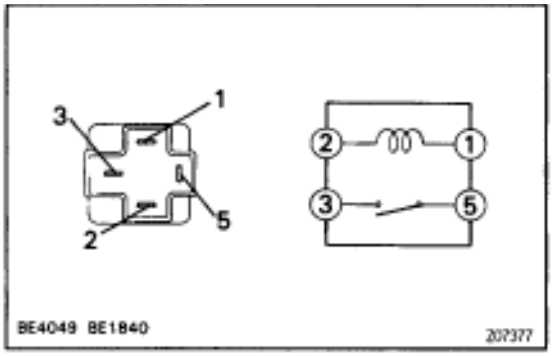

FOG LIGHT RELAY INSPECTION

INSPECT RELAY CONTINUITY

Condition	Tester connection to terminal number	Specified condition
Constant	1–2	Continuity
Apply B+ between terminals 1 and 2.	3–5	Continuity

If continuity is not as specified, replace the relay.

INTERIOR LIGHT SYSTEM

PARTS LOCATION

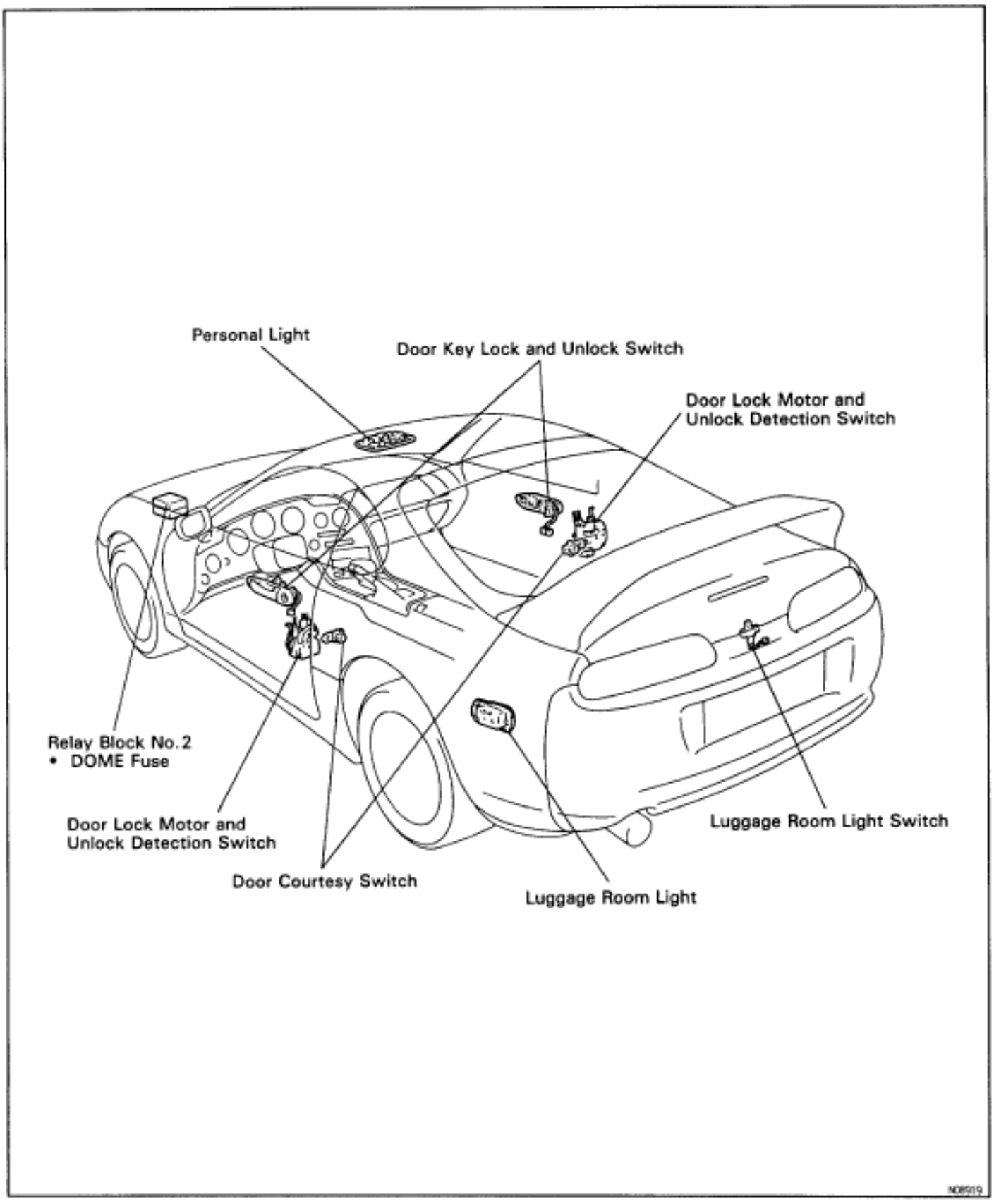

TROUBLESHOOTING

The table below will be useful for you in troubleshooting these electrical problems. The most likely causes of the malfunction are shown in the order of their probability. Inspect each part in the order shown, and replace the part when it is found to be faulty.

Trouble	Parts name	(See page)
Only one light does not light up.	1. Bulb 2. Wire Harness	
Interior light does not light up (All).	1. DOME Fuse 2. Integration Relay 3. Wire Harness	(BE–5) (BE–29)
”Illuminated Entry System” does not operate.	1. Integration Relay 2. Door Courtesy Switch 3. Door Key Lock and Unlock Switch 4. Door Unlock Detection Switch 5. Wire Harness	(BE–29) (BE–28) (BE–158) (BE–145)
Front personal light does not light up.	1. Bulb 2. Front Personal Light 3. Wire Harness	(BE–27)
Luggage room light does not light up.	1. Bulb 2. Luggage Room Light Switch	(BE–28)

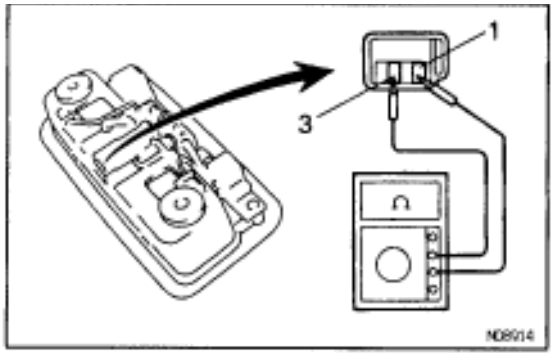

PERSONAL LIGHT SWITCH INSPECTION

1. INSPECT INTERIOR LIGHT CONTINUITY

Switch position	Tester connection to terminal number	Specified condition
DOOR	1–3	Continuity
OFF	–	No continuity

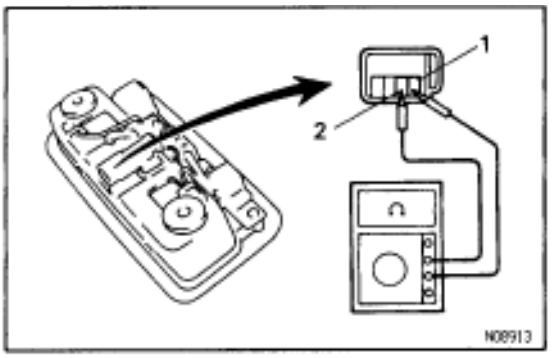

2. INSPECT PERSONAL LIGHT CONTINUITY

Switch position	Tester connection to terminal number	Specified condition
OFF	–	No continuity
*ON	1–2	Continuity

* Set the interior light switch to OFF or DOOR.

If continuity is not as specified, replace the light assembly or bulb.

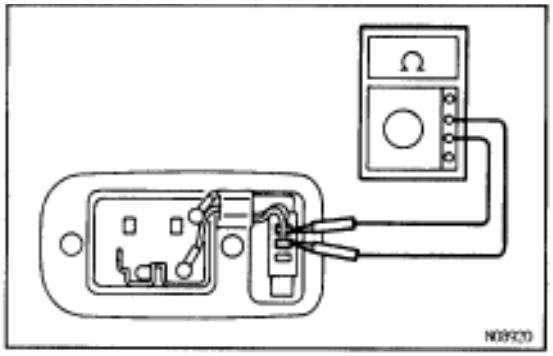

LUGGAGE ROOM LIGHT INSPECTION

INSPECT ROOM LIGHT CONTINUITY

Switch position	Tester connection to terminal number	Specified condition
OFF	1–2	No continuity
ON	1–2	Continuity

If continuity is not as specified, replace the light.

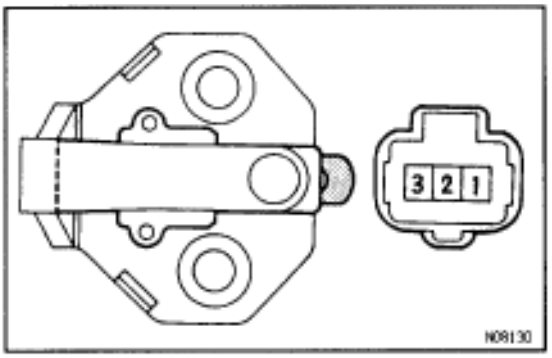

DOOR COURTESY SWITCH INSPECTION

INSPECT SWITCH CONTINUITY

Switch position	Tester connection to terminal number	Specified condition
ON (Switch pin released)	1–2–3	Continuity
OFF (Switch pin pushed in)	–	No continuity

If continuity is not as specified, replace the switch

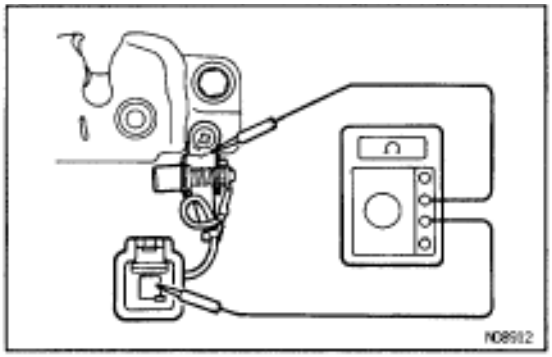

LUGGAGE ROOM LIGHT SWITCH INSPECTION

INSPECT ROOM LIGHT CONTINUITY

Condition	Tester connection	Specified condition
ON (Switch pin released)	1–Switch body	Continuity
OFF (Switch pin pushed in)	1–Switch body	No continuity

If continuity is not as specified, replace the switch.

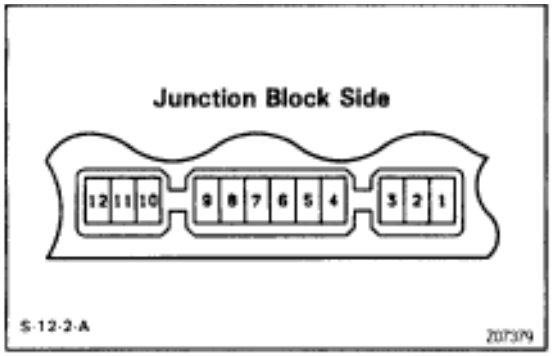

INTEGRATION RELAY INSPECTION

INSPECT RELAY CIRCUIT

Remove the relay from junction block and inspect the connector on the junction block side, as shown in the chart.

Tester connection to terminal number	Condition	Specified condition
4–Ground	Courtesy Switch Position OFF (Door closed)	No continuity
4–Ground	Courtesy Switch Position ON (Door opened)	Continuity
10–Ground	Constant	Continuity
1–Ground	Constant	Battery positive voltage
7–Ground	Ignition switch position / LOCK or ACC	No voltage
7–Ground	Ignition switch position / ON	Battery positive voltage

If circuit is as specified, trying replacing the relay with a new one.
If the circuit is not as specified, inspect the circuits connected to other parts.

DOOR KEY LOCK AND UNLOCK SWITCH INSPECTION

See page BE–158

DOOR UNLOCK DETECTION SWITCH INSPECTION

See page BE–145

BACK–UP LIGHT SYSTEM

PARTS LOCATION

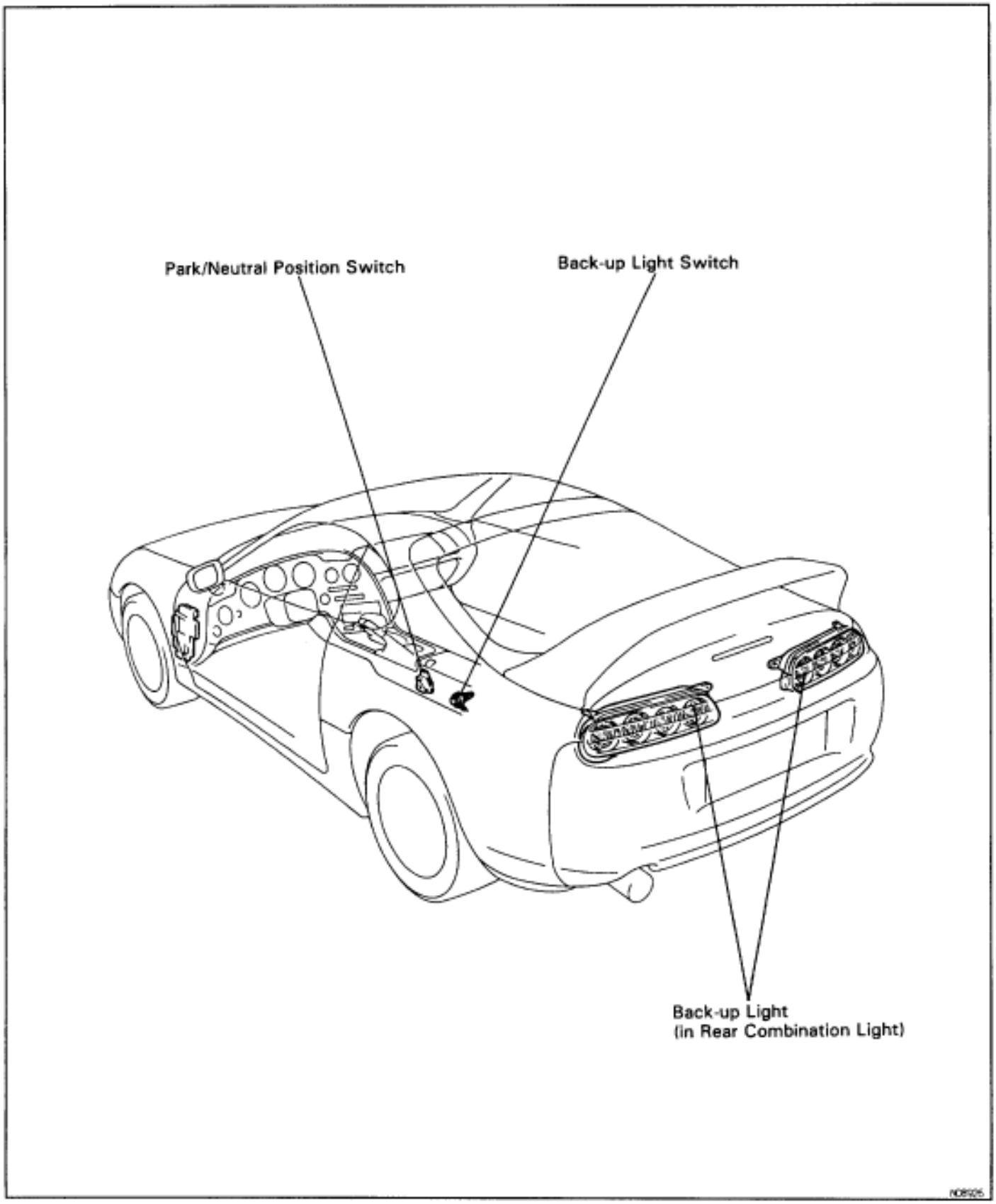

TROUBLESHOOTING

The table below will be useful for you in troubleshooting these electrical problems. The most likely causes of the malfunction are shown in the order of their probability. Inspect each part in the order shown, and replace the part when it is found to be faulty.

Trouble	Parts name	(See page)
Back Up Light does not light up	1. GAUGE Fuse 2. Ignition Switch 3. Back–up Light Switch (M/T) 4. Park/ Neutral Position Switch (A/T) 5. Wire Harness 6. Bulb	(BE–6) (BE–8) (BE–31) (AT1–Section)
Back Up Light remains always on	1. Wire Harness	
Only one light does not light up	1. Wire Harness 2. Bulb	

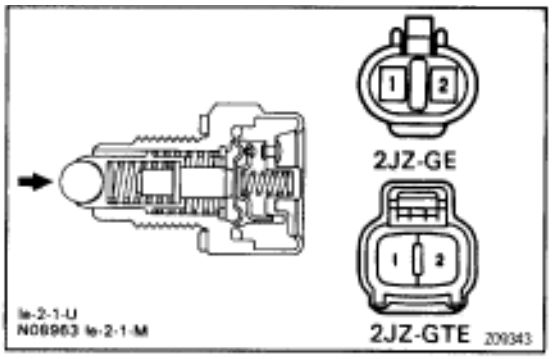

BACK UP LIGHT SWITCH INSPECTION

INSPECT SWITCH CONTINUITY

Switch position	Tester connection to terminal number	Specified condition
Free	1–2	No continuity
Push	1–2	Continuity

If continuity is not as specified, replace the switch.

PARK/NEUTRAL POSITION SWITCH INSPECTION

See AT section

STOP LIGHT SYSTEM
PARTS LOCATION

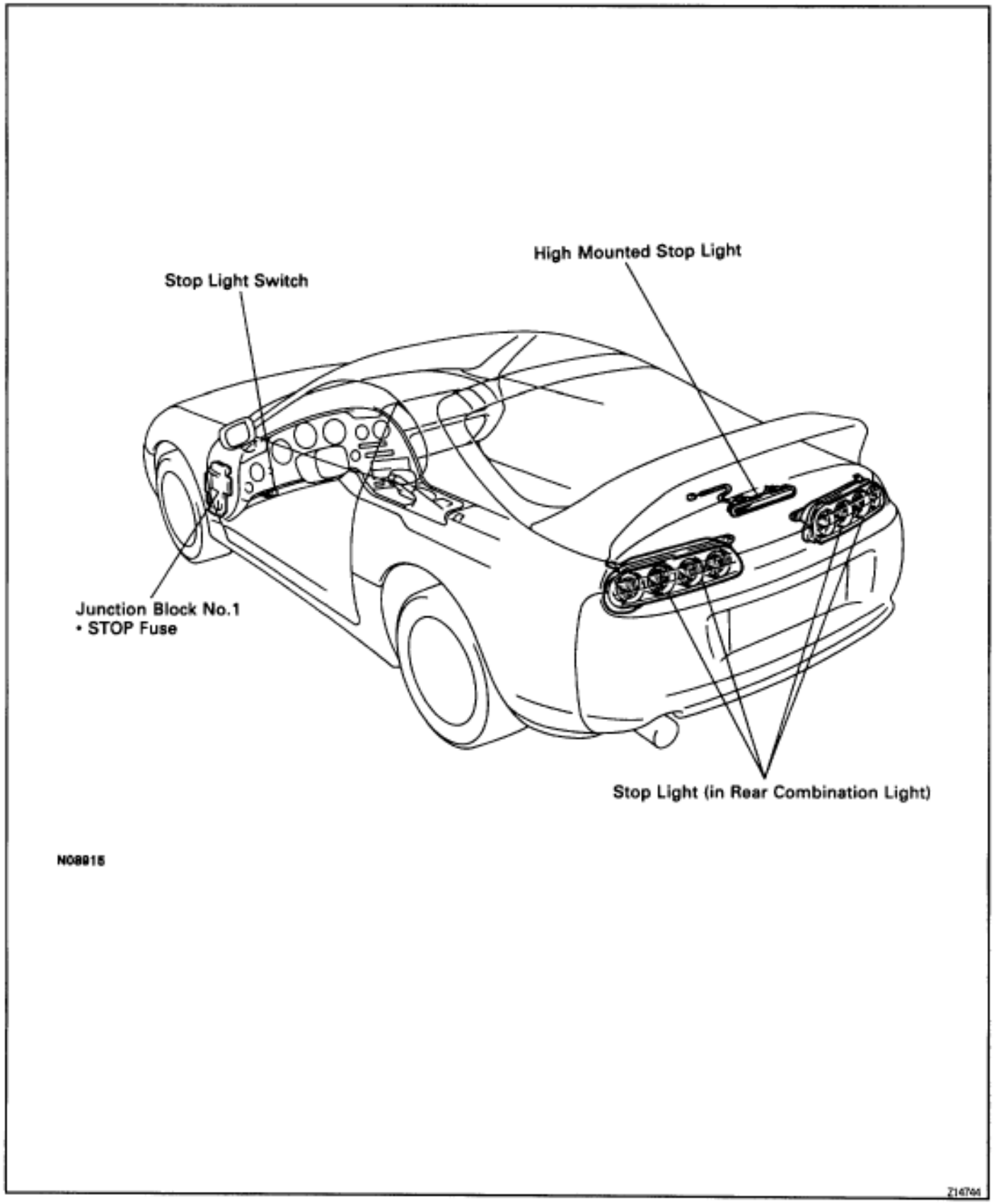

TROUBLESHOOTING

The table below will be useful for you in troubleshooting these electrical problems. The most likely causes of the malfunction are shown in the order of their probability. Inspect each part in the order shown, and replace the part when it is found to be faulty.

Trouble	Parts name	(See page)
Stop light does not light up	1. STOP Fuse 2. Stop Light Switch 3. Wire Harness 4. Bulb	(BE–6) (BE–33)
Stop light remains always on	1. Stop Light Switch 2. Wire Harness	(BE–33)
Only one light does not light up	1. Wire Harness 2. Bulb	

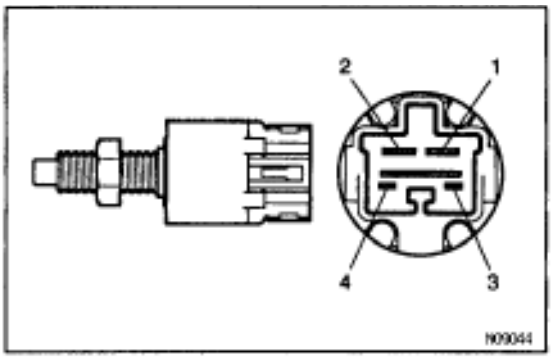

STOP LIGHT SWITCH INSPECTION

INSPECT SWITCH CONTINUITY

Switch position	Tester connection to terminal number	Specified condition
Switch pin free (Pedal depressed)	1–2	Continuity
Switch pin pushed in (Pedal released)	3–4	Continuity

If continuity is not as specified, replace the switch.

WIPER AND WASHER SYSTEM
PARTS LOCATION

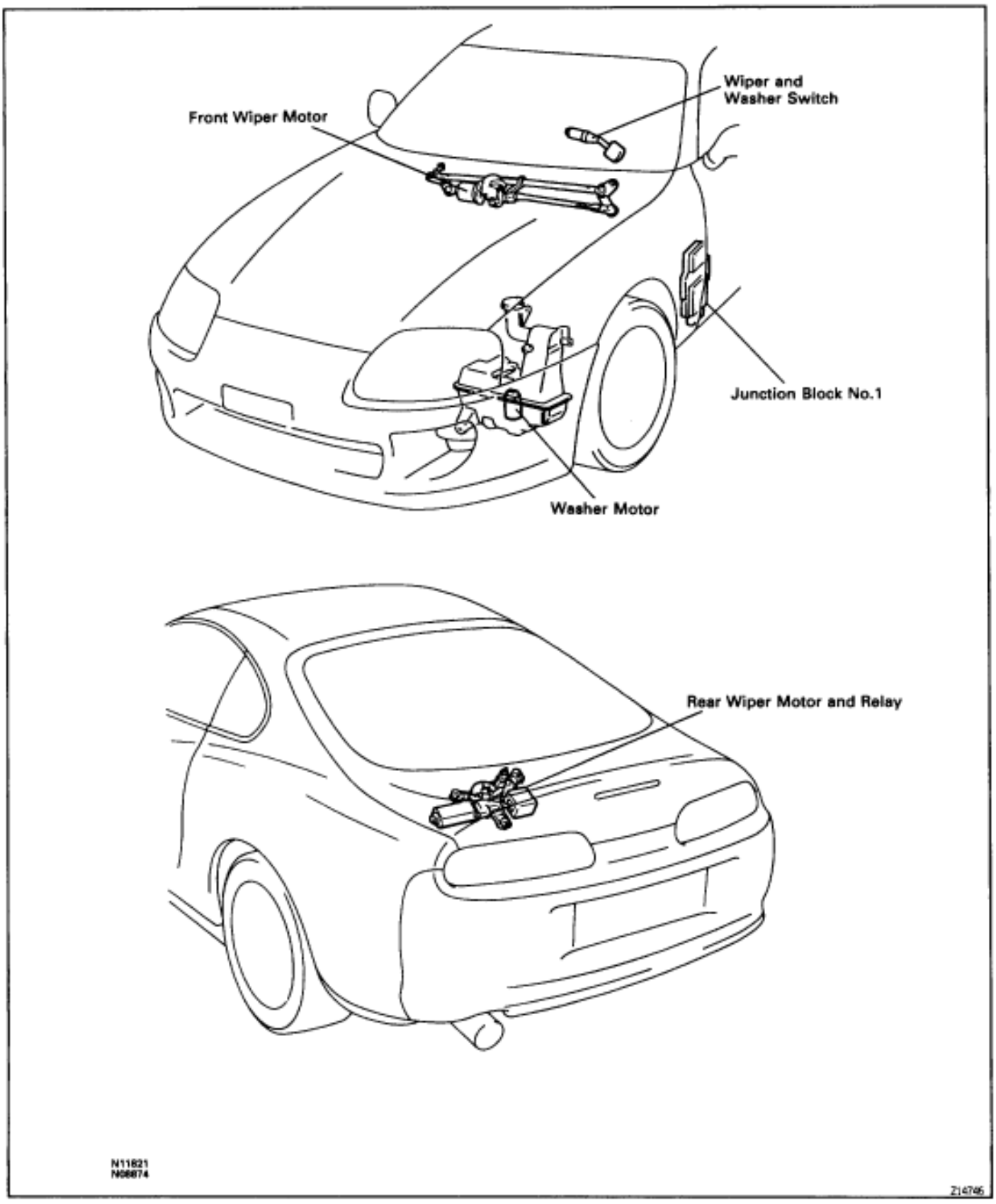

TROUBLESHOOTING

The table below will be useful for you in troubleshooting these electrical problems. The most likely causes of the malfunction are shown in the order of their probability. Inspect each part in the order shown, and replace the part when it is found to be faulty.

Trouble	Parts name	(See page)
Wipers and washers do not operate.	1. ALT Fuse 2. AM1 Fuse 3. WIPER Fuse 4. Ignition Switch 5. Wiper and Washer Switch 6. Wire Harness	(BE–5) (BE–5) (BE–6) (BE–8) (BE–36)
Front wiper does not operate.	1. Front Wiper and Washer Switch 2. Front Wiper Motor 3. Wire Harness	(BE–36) (BE–38)
Rear wiper does not operate.	1. Rear Wiper and Washer Switch 2. Rear Wiper Motor and Relay 3. Wire Harness	(BE–37) (BE–39)
Front washer does not operate.	1. Front Wiper and Washer Switch 2. Washer Motor 3. Wire Harness	(BE–36) (BE–39)
Rear washer does not operate.	1. Rear Wiper and Washer Switch 2. Washer Motor 3. Wire Harness	(BE–37) (BE–39)

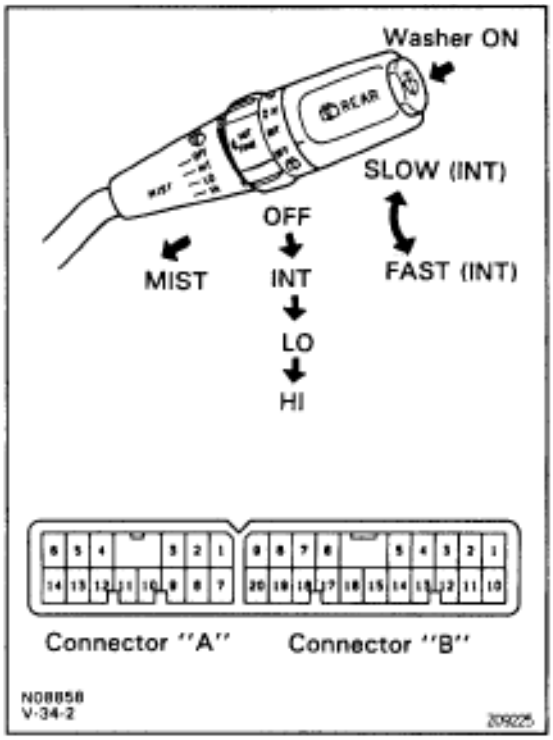

WIPER AND WASHER SWITCH INSPECTION

1. INSPECT FRONT WIPER AND WASHER SWITCH CONTINUITY

Switch position	Tester connection to terminal number	Specified condition
Wiper OFF	B4–B7	Continuity
Wiper OFF and MIST	B7–B18	Continuity
Wiper INT	B4–B7	Continuity
Wiper INT and MIST	B7–B18	Continuity
Wiper LO	B7–B18	Continuity
Wiper LO and MIST	B7–B18	Continuity
Wiper HI	B13–B18	Continuity
Wiper HI and MIST	B7–B13 B13–B18	Continuity
Washer ON	B8–B16	Continuity

If continuity is not as specified, replace the switch.

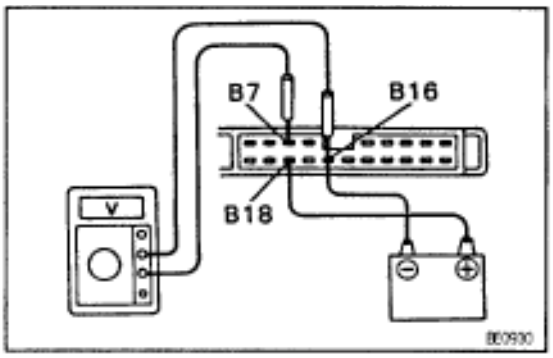

Intermittent Operation

(a) Turn the wiper switch to INT position.
(b) Turn the intermittent time control switch to FAST position.
(c) Connect the positive (+) lead from the battery to terminal B18 and the negative (–) lead to terminal B16.
(d) Connect the positive (+) lead from the voltmeter to terminal B7 and the negative (–) lead to terminal B16, check that the meter needle indicates battery voltage.

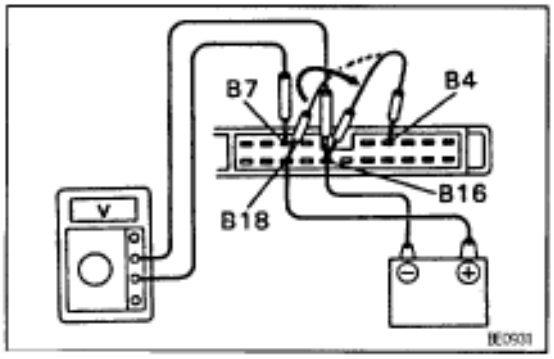

(e) After connecting terminal B4 to terminal B18, connect it to terminal B16.
Then, check that the voltage rises from O V to battery positive voltage within the times, as shown in the table.

INT time control switch position	Voltage
FAST	Approx. 1–3 sec. Battery positive voltage 0 volt
SLOW	Approx. 10 –15 sec. Battery positive voltage 0 volt

If operation is not as specified, replace the wiper and washer switch.

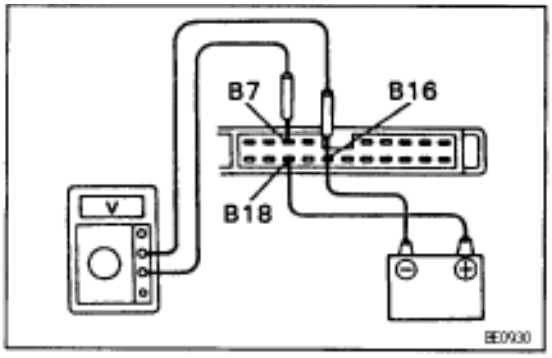

Washer Linked Operation

(a) Connect the positive (+) lead from the battery to terminal B18 and the negative (–) lead to terminal B16.

(b) Connect the positive (+) lead from the voltmeter to terminal B7 and the negative (–) lead to terminal B16.

(c) Push in the washer switch, check that the voltage changes as shown in the table.

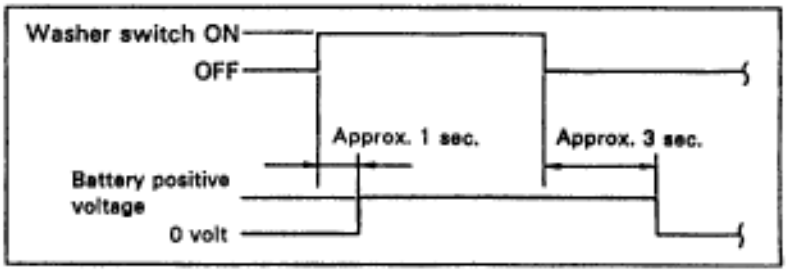

If operation is not as specified, replace the wiper and washer switch.

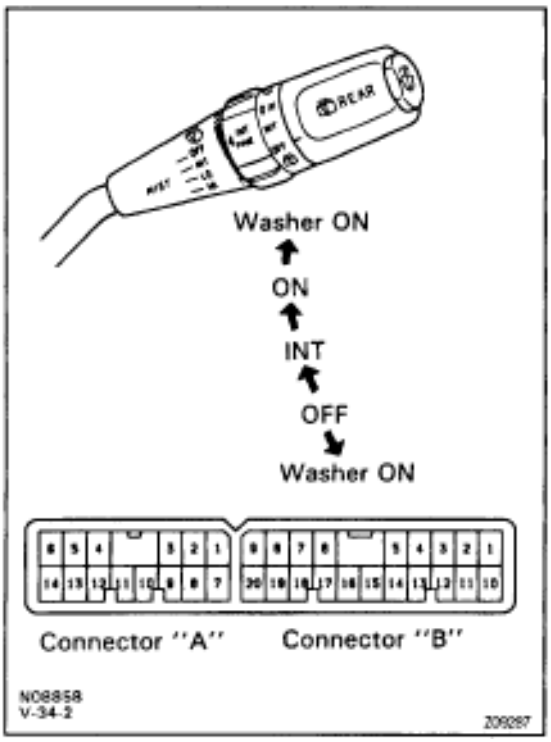

2. INSPECT REAR WIPER AND WASHER SWITCH CONTINUITY

Switch position	Tester connection to terminal number	Specified condition
Washer ON (Lower)	B2–B16	Continuity
Wiper OFF	–	Continuity
Wiper INT	B10–B16	Continuity
Wiper ON	B1–B16	Continuity
Washer ON (Upper)	B1–B2 B2–B16	Continuity

If continuity is not as specified, replace the switch.

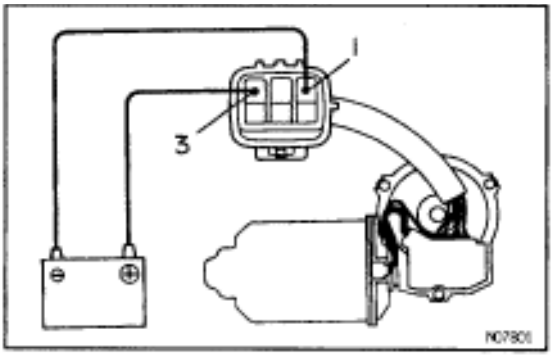

WIPER MOTOR INSPECTION

1. INSPECT FRONT WIPER MOTOR OPERATION

Low Speed

Connect the positive (+) lead from the battery to terminal 3 and the negative (–) lead to terminal 1, check that the motor operates at low speed.

If operation is not as specified, replace the motor.

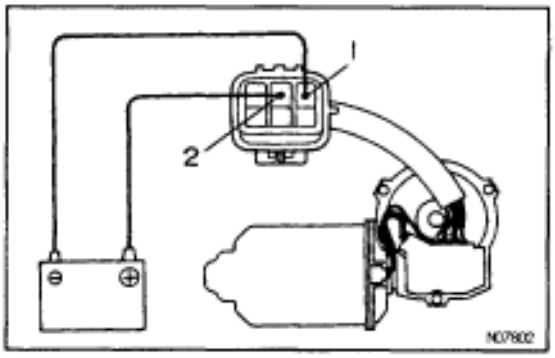

High Speed

Connect the positive (+) lead from the battery to terminal 2 and the negative (–) lead to terminal 1, check that the motor operates at high speed.

If operation is not as specified, replace the motor.

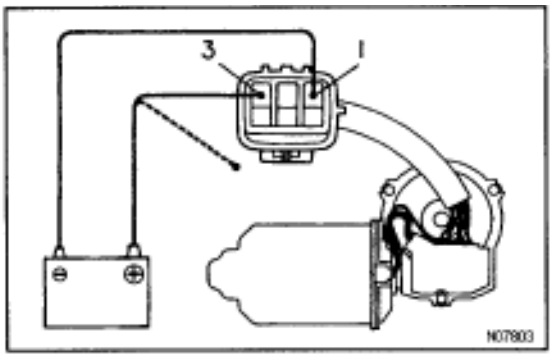

Stopping at Stop Position

(a) Operate the motor at low speed and stop the motor operation anywhere by disconnecting positive (+) lead from terminal 3.

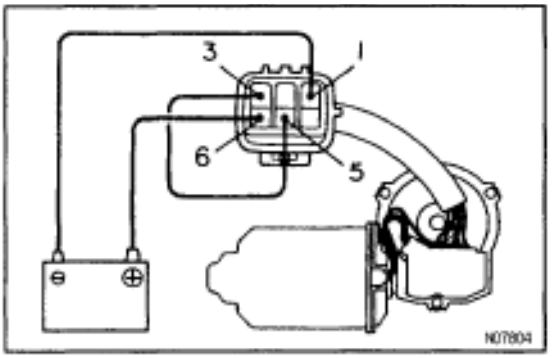

(b) Connect terminals 3 and 5.

(c) Connect the positive (+) lead from the battery to terminal 6 and negative (–) lead to terminal 1, check that the motor stops running at the stop position after the motor operates again.

If operation is not as specified, replace the motor.

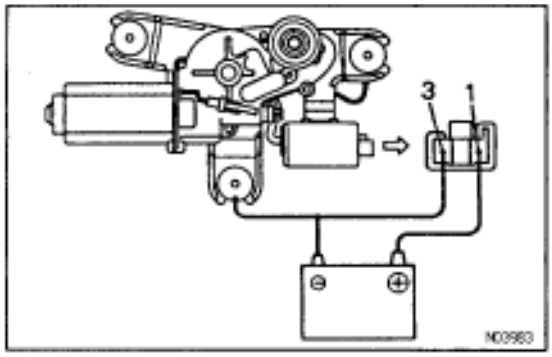

2. INSPECT REAR WIPER MOTOR AND RELAY OPERATION

(a) Connect the positive (+) lead from the battery to terminal 1, and the negative (–) lead to terminal 3 and the motor body, check that the motor operates.

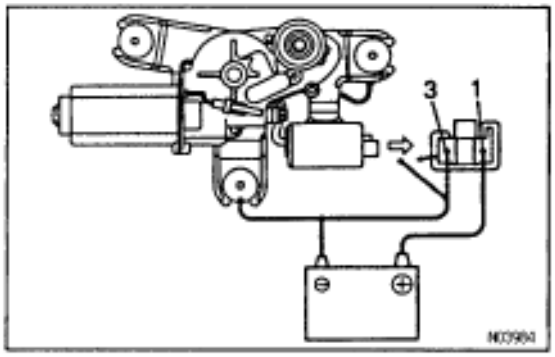

(b) Disconnect the negative (–) lead from terminal 3, check that the motor stops running at the stop position.
If operation is not as specified, replace the motor and relay.

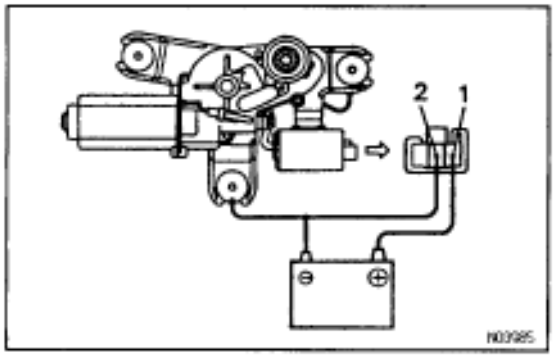

Intermittent Operation
Connect the positive (+) lead from the battery to terminal 1, and the negative (–) lead to terminal 2 and the motor body, check that the motor operates intermittently for 9–15 seconds.
If operation is not as specified, replace the motor and relay.

WASHER MOTOR INSPECTION

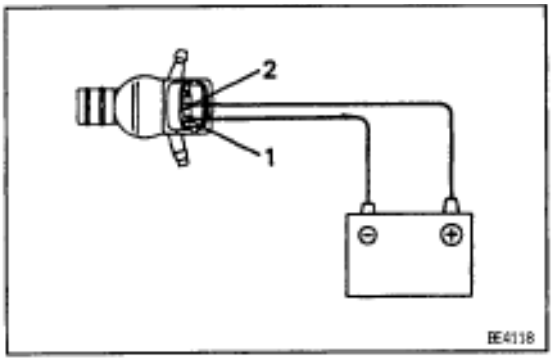

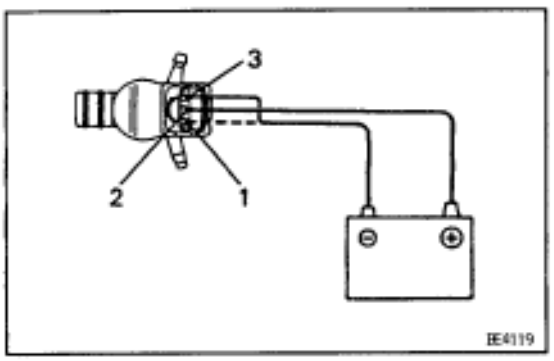

INSPECT MOTOR OPERATION
Front Washer
Connect the positive (+) lead from the battery to terminal 2 and the negative (–) lead to terminal 1, check that the motor operates.
NOTICE: These tests must be performed quickly (within 20 seconds) to prevent the coil from burning out.
If operation is not as specified, replace the motor.
Rear Washer
Connect the positive (+) lead from the battery to terminal 2 and the negative (–) lead to terminal 3, check that the motor operates.
NOTICE: These tests must be performed quickly (within 20 seconds) to prevent the coil from burning out.
If operation is not as specified, replace the motor.

COMBINATION METER

PARTS LOCATION

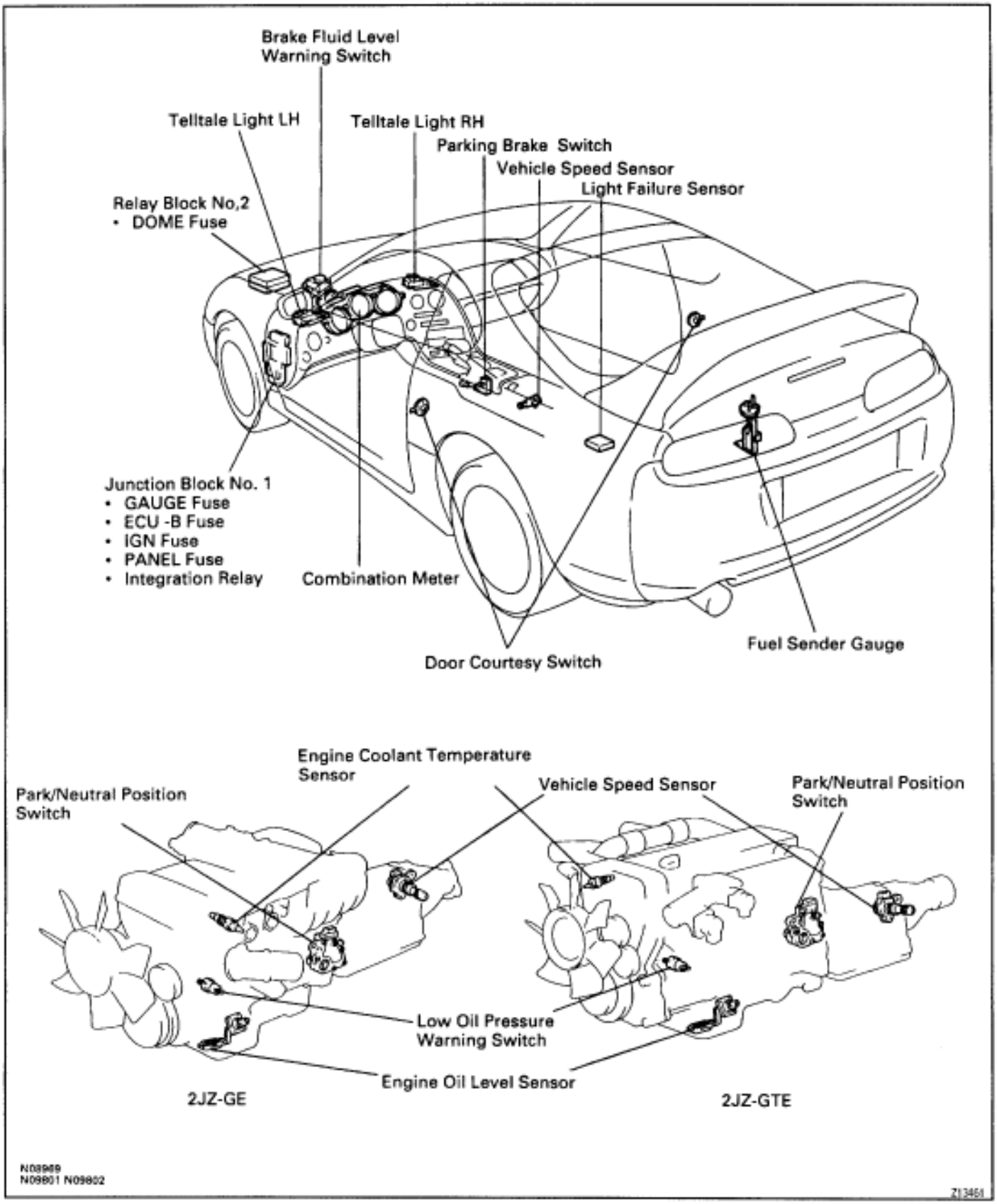

TROUBLESHOOTING

The table below will be useful for you in troubleshooting these electrical problems. The most likely causes of the malfunction are shown in the order of their probability. Inspect each part in the order shown, and replace the part when it is found to be faulty.

METER, GAUGES AND ILLUMINATION

Trouble	Parts name	(See page)
Tachometer, Fuel Gauge and Engine Coolant Temperature Gauge do not operate	1. GAUGE Fuse 2. Meter Circuit Plate 3. Wire Harness	(BE–6) (BE–44)
Speedometer does not operate	1. Vehicle Speed Sensor 2. Meter Circuit Plate 3. Wire Harness	(BE–46) (BE–44)
Tachometer does not operate	1. Igniter 2. ECM 3. Meter Circuit Plate 4. Wire Harness	 (EG Section) (BE–44)
Fuel Gauge does not operate or abnormal operation	1. Fuel Receiver Gauge 2. Fuel Sender Gauge 3. Meter Circuit Plate 4. Wire Harness	(BE–48) (BE–49) (BE–44)
Engine Coolant Temperature Gauge does not operate or abnormal operation	1. Engine Coolant Temperature Receiver Gauge 2. Engine Coolant Temperature Sender Gauge 3. Meter Circuit Plate 4. Wire Harness	(BE–50) (BE–50) (BE–44)
All illumination lights do not light up	1. TAIL Fuse 2. Light Control Rheostat 3. Meter Circuit Plate 4. Wire Harness	(BE–6) (BE–54) (BE–44)
Only one illumination light does not light up	1. Bulb 2. Meter Circuit Plate	 (BE–44)

WARNING LIGHTS

Trouble	Parts name	(See page)
Warning lights do not light up (Except Discharge and Door Open)	1. Bulb 2. IGN Fuse 3. Ignition Switch 4. Meter Circuit Plate 5. Wire Harness 6. Generator	 (BE–6) (BE–8) (BE–44)
Brake Warning Light does not light up	1. Bulb 2. Brake Fluid Level Warning Switch 3. Parking Brake Switch 4. Bulb Check Relay 5. Meter Circuit Plate 6. Wire Harness	 (BE–52) (BE–52) (BE–44)
Seat Belt Warning Light does not light up	1. Bulb 2. Seat Belt Buckle Switch 3. Integration Relay 4. Meter Circuit Plate 5. Wire Harness	 (BE–56) (BE–55) (BE–44)
Engine Oil Level Warning Light does not light up	1. Bulb 2. Engine Oil Level Switch 3. Meter Circuit Plate 4. Wire Harness	 (BE–51) (BE–44)
Low Oil Pressure Warning Light does not light up	1. Bulb 2. Low Oil Pressure Warning Switch 3. Meter Circuit Plate 4. Wire Harness	 (BE–51) (BE–44)
Door Open Warning Light does not light up	1. Bulb 2. DOME Fuse 3. Door Courtesy Switch 4. Luggage Room Light Switch 5. Integration Relay 6. Meter Circuit Plate 7. Wire Harness	 (BE–5) (BE–54) (BE–28) (BE–44)
Master Warning Light does not light up	1. Bulb 2. Telltale Light 3. Meter Circuit Plate 4. Wire Harness	 (BE–48) (BE–44)

INDICATOR LIGHTS

Trouble	Parts name	(See page)
SRS Indicator Light does not light up	1. Bulb 2. Wire Harness 3. Center Air Bag Sensor	 (RS Section)
ABS Indicator Light does not light up	1. Bulb 2. Wire Harness 3. Traction ECU	 (BR Section)
Malfunction Indicator Light does not light up	1. Bulb 2. ECM 3. Wire Harness	 (EG Section)
TRAC OFF Indicator Light does not light up	1. Bulb 2. Traction Solenoid Relay 3. Traction ECU 4. Wire Harness	 (BR Section) (BR Section)
Security Indicator Light does not light up	1. Light Emitting Diode 2. Theft Deterrent and Door Lock ECU 3. Wire Harness	 (BE–123)
A/T Shift Position Indicator Light does not light up	1. Bulb 2. Park/Neutral Position Switch 3. Light Control Rheostat 4. Meter Circuit Plate 5. Wire Harness	 (AT1 Section) (BE–54) (BE–44)
MANU Indicator Light does not light up	1. Bulb 2. ECM 3. Meter Circuit Plate 4. Wire Harness	 (EG Section) (BE–44)
O/D OFF Indicator Light does not light up	1. Bulb 2. O/D Main Switch 3. ECM 4. Meter Circuit Plate 5. Wire Harness	 (EG Section) (BE–44)
TRAC Indicator Light does not light up	1. Bulb 2. ABS and Traction ECU 3. Meter Circuit Plate 4. Wire Harness	 (BE–44)
Turn Indicator Light does not light up	1. Bulb 2. Turn Signal and Hazard Warning System 3. Meter Circuit Plate 4. Wire Harness	 (BE–20) (BE–44)
High Beam Indicator Light does not light up	1. Bulb 2. Headlight System 3. Meter Circuit Plate 4. Wire Harness	 (BE–10) (BE–44)
CRUISE Indicator Light does not light up	1. Bulb 2. Cruise Control ECU 3. Meter Circuit Plate 4. Wire Harness	 (BE–170) (BE–44)

METER CIRCUIT

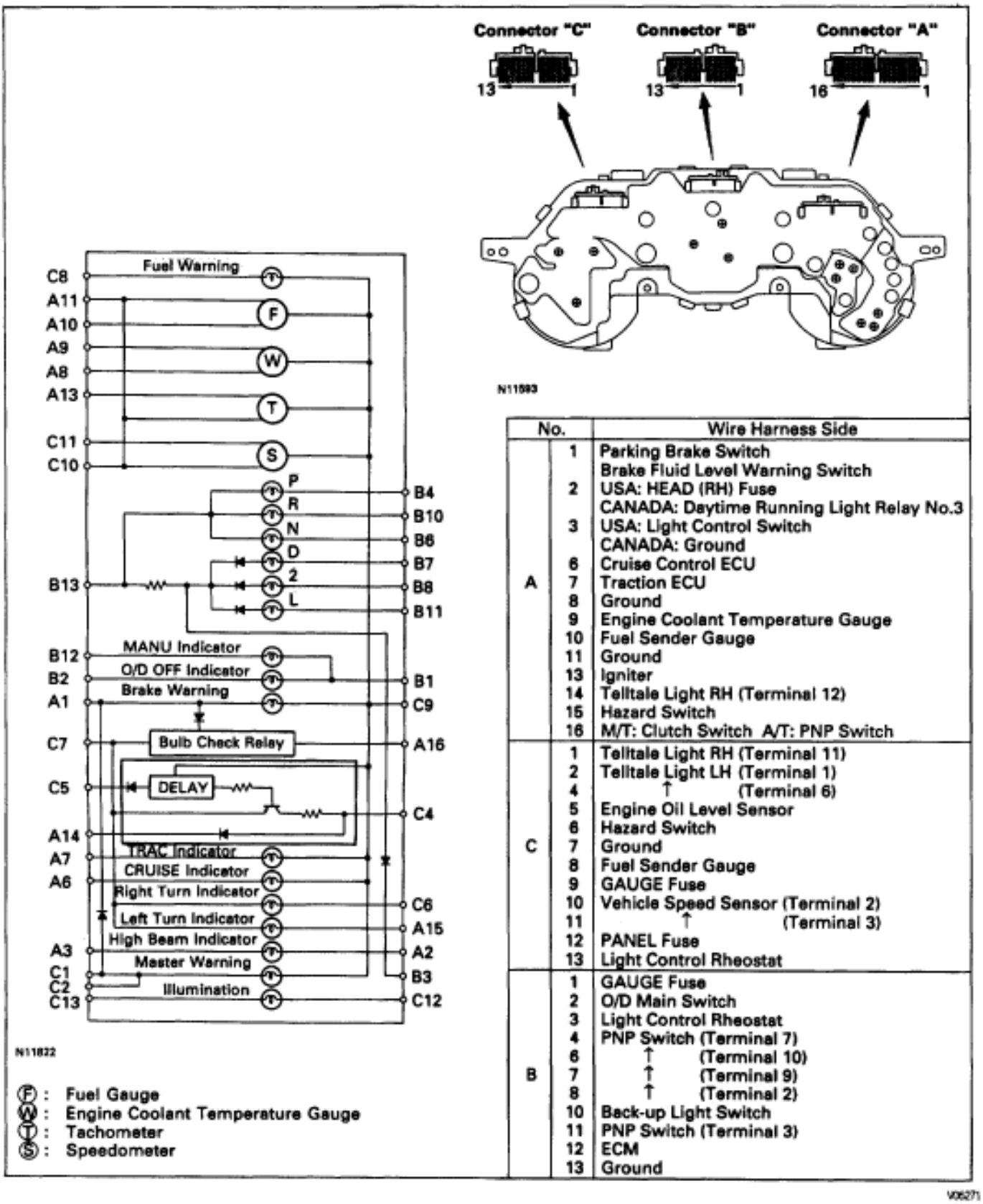

No.		Wire Harness Side
A	1	Parking Brake Switch Brake Fluid Level Warning Switch
	2	USA: HEAD (RH) Fuse CANADA: Daytime Running Light Relay No.3
	3	USA: Light Control Switch CANADA: Ground
	6	Cruise Control ECU
	7	Traction ECU
	8	Ground
	9	Engine Coolant Temperature Gauge
	10	Fuel Sender Gauge
	11	Ground
	13	Igniter
	14	Telltale Light RH (Terminal 12)
	15	Hazard Switch
	16	M/T: Clutch Switch A/T: PNP Switch
C	1	Telltale Light RH (Terminal 11)
	2	Telltale Light LH (Terminal 1)
	4	↑ (Terminal 6)
	5	Engine Oil Level Sensor
	6	Hazard Switch
	7	Ground
	8	Fuel Sender Gauge
	9	GAUGE Fuse
	10	Vehicle Speed Sensor (Terminal 2)
	11	↑ (Terminal 3)
	12	PANEL Fuse
	13	Light Control Rheostat
B	1	GAUGE Fuse
	2	O/D Main Switch
	3	Light Control Rheostat
	4	PNP Switch (Terminal 7)
	6	↑ (Terminal 10)
	7	↑ (Terminal 9)
	8	↑ (Terminal 2)
	10	Back-up Light Switch
	11	PNP Switch (Terminal 3)
	12	ECM
	13	Ground

V06271

TELLTALE LIGHT CIRCUIT

Telltale Light LH

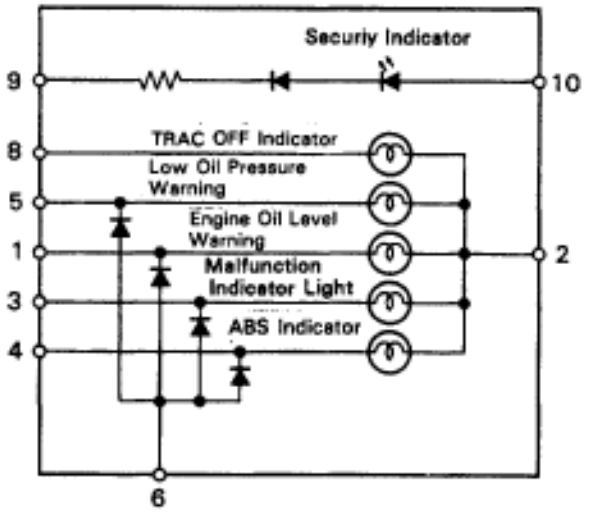

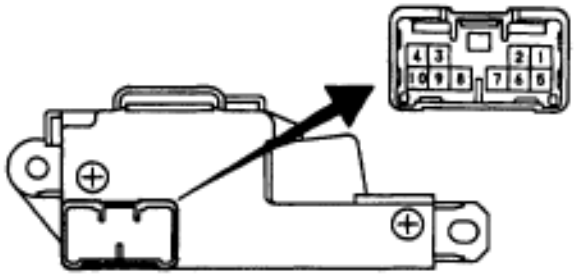

No.	Wire Harness Side
1	Combination Meter (Terminal B2)
2	GAUGE Fuse
3	ECM
4	ECM
5	Low Oil Pressure Warning Switch
6	Combination Meter (Terminal B4)
8	TRAC ECU, Traction Solenoid Relay
9	Ground
10	Theft Deterrent and Door Lock ECU

N08982 N08980 h-10-2

Telltale Light RH

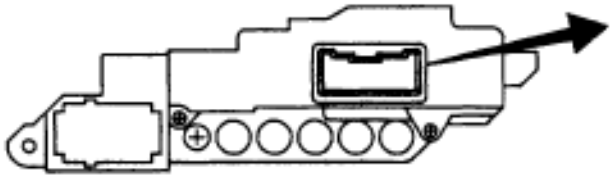



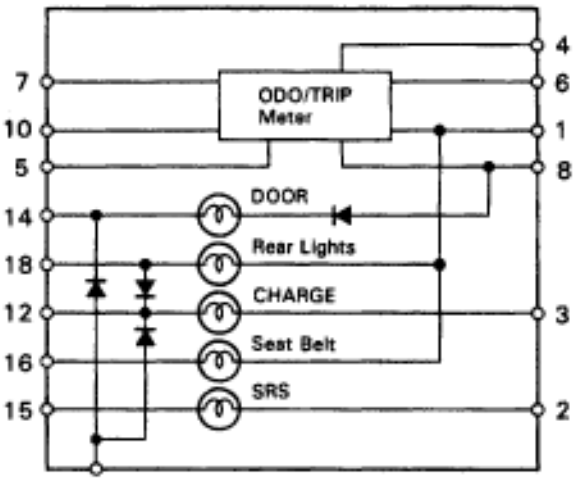

No.	Wire Harness Side
1	GAUGE Fuse
2	ECU-B Fuse
3	IGN Fuse
4	PANEL Fuse
5	Vehicle Speed Sensor (Terminal 3)
6	PPS ECU, Cruise Control ECU, ECM Air Conditioner Amplifier
7	Ground
8	DOME Fuse
10	Light Control Rheostat
11	Combination Meter (Terminal B1)
12	ALT terminal L
14	Door Courtesy Switch
15	Center Air Bag Sensor
16	Integration Relay (Terminal 9)
18	Light Failure Sensor

N08981 N08979 h-18-2

SPEEDOMETER INSPECTION

ON–VEHICLE

Using a speedometer tester, inspect the speedometer for allowable indication error and check the operation of the odometer.

HINT: Tire wear and tire over or under inflation will increase the indication error.

If error is excessive, replace the speedometer.

USA (mph)		CANADA (km/h)	
Standard indication	Allowable range	Standard indication	Allowable range
20	18–24	20	17–24
40	38–44	40	38–46
60	56–66	60	57.5–67
80	78–88	80	77–88
100	98–110	100	96–109
120	118–132	120	115–130
		140	134–151.5
		160	153–173

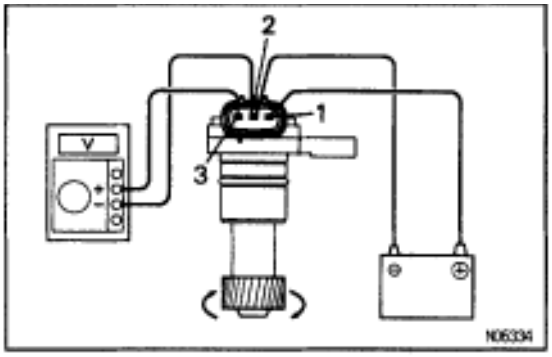

VEHICLE SPEED SENSOR INSPECTION

INSPECT SENSOR OPERATION

(a) Connect the positive (+) lead from battery to terminal 1 and negative (–) lead to terminal 2.

(b) Connect the positive (+) lead from tester to terminal 3 and negative (–) lead to terminal 2.

(c) Rotate shaft.

(d) Check that there is voltage change from approx. 0 V to 11 V or more between terminals 2 and 3.

HINT: The voltage change should be 4 times for every revolution of the speed sensor shaft.

If operation is not as specified, replace the sensor.

TACHOMETER INSPECTION

INSPECT TACHOMETER

ON–VEHICLE

(a) Connect a tune–up test tachometer, and start the engine.

NOTICE: Reversing the connection of the tachometer will damage the transistors and diodes inside.

(b) Compare the tester and tachometer indications.
If error is excessive, replace the tachometer.

RPM (DC 13.5 V, 25˚C (77˚F))

Standard indication (rpm)	Allowable range (rpm)
700	630–770
1000	915–1115
2000	1920–2220
3000	2890–3350
4000	3940–4400
5000	5025–5425
6500	6650–6950
7000	7025–7625

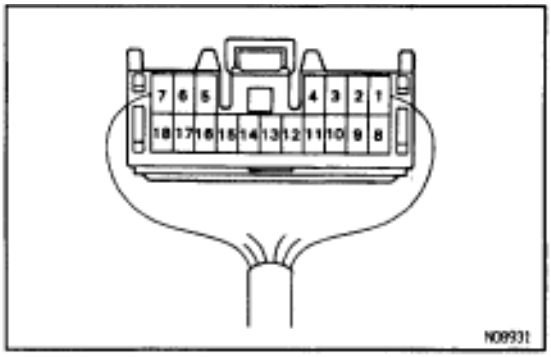

OD TRIP METER INSPECTION

INSPECT OD/TRIP METER (in Telltale Light RH)

(a) Remove the telltale light with connector still connected.
(b) Check the continuity and voltage.

Tester connection to terminal number	Condition	Specified condition
7–Ground*1	Constant	Continuity
1–Ground*1	Ignition Switch ”ON” position	Battery positive voltage
4–Ground*1	Light Control Switch ”TAIL” or ”HEAD” position	Battery positive voltage
5–7*1	Ignition Switch ON Drive the vehicle slowly	0V ↔ Battery positive voltage
6–7*2	Ignition Switch ON Drive the vehicle slowly	0V ↔ more than 5V
8–Ground*1	Constant	Battery positive voltage
10–Ground*1	Ignition Switch ON, Light Control Switch TAIL or HEAD, Turn the light control Rheostat knob to clockwise	6V → 0V

*1: If continuity or voltage are not as specified, check vehicle side.
*2: If voltage is not as specified, replace the telltale light.

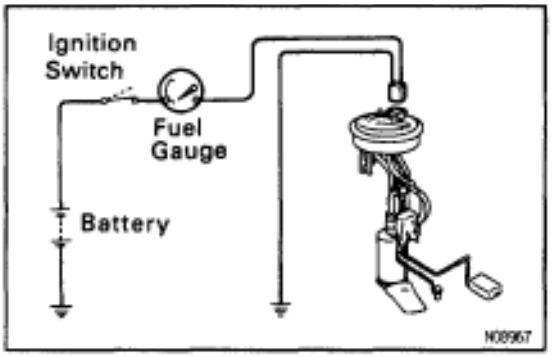

FUEL GAUGE INSPECTION

1. INSPECT RECEIVER GAUGE OPERATION

(a) Disconnect the connector from the sender gauge assembly.
(b) Turn the ignition switch ON, check that the receiver gauge needle indicates EMPTY.

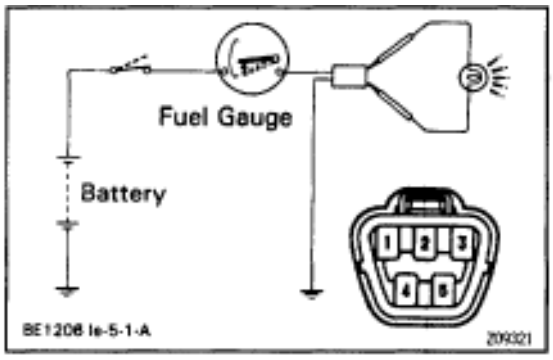

(c) Connect terminals 2 and 3 on the wire harness side connector through a 3.4 W test bulb.
(d) Turn the ignition switch ON, check that the bulb lights up and receiver gauge needle moves toward the full side.
HINT: Because of the silicon oil in the gauge, it will take a short time for the needle to stabilize.
If operation is not as specified, inspect the receiver gauge resistance.

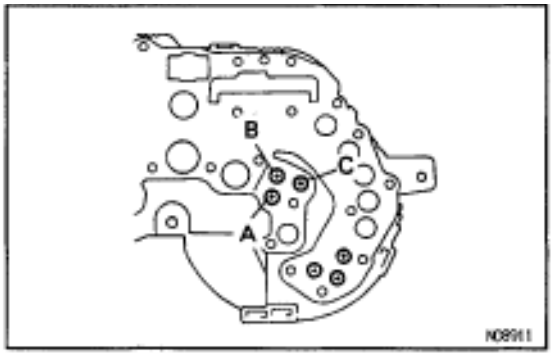

2. INSECT RECEIVER GAUGE RESISTANCE

Measure the resistance between terminals.

Between terminals	Resistance (Ω)
A–B	Approx. 269.7
A–C	Approx. 123.5
B–C	Approx. 146.2

If resistance value is not as specified, replace the fuel receiver gauge.

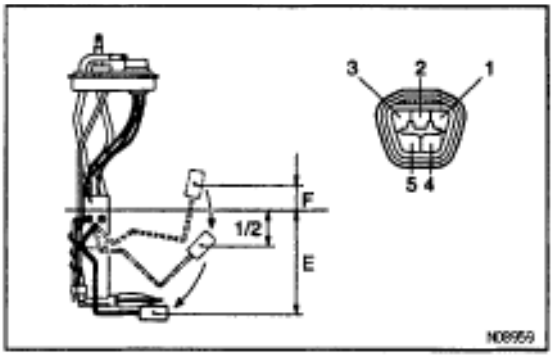

3. INSPECT SENDER GAUGE RESISTANCE

Measure the resistance between terminals 2 and 3 for each float position.

Float position mm (in.)		Resistance (Ω)
F	Approx. 33.8 (1.33)	Approx. 4.0
1/2	Approx. 44.8 (1.76)	Approx. 55.0
E	Approx. 141.1 (5.55)	Approx. 107.0

If resistance value is not as specified, replace the sender gauge.

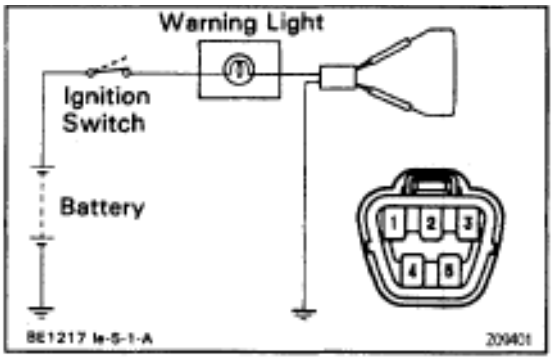

FUEL LEVEL WARNING INSPECTION

1. INSPECT WARNING LIGHT

(a) Disconnect the connector from the sender gauge.

(b) Connect terminals 1 and 3 on the wire harness side connector.

(c) Turn the ignition switch ON, check that the warning light lights up.

If the warning light does not light up, test the bulb or inspect wire harness.

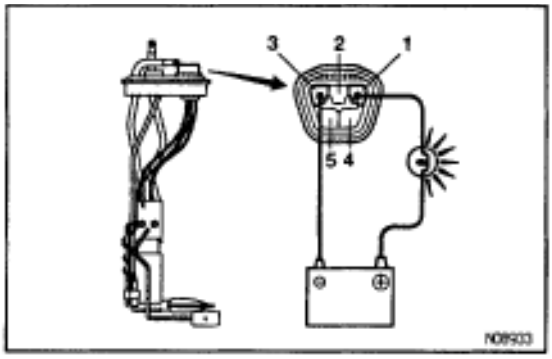

2. INSPECT SWITCH

(a) Apply battery positive voltage between terminals 1 and 3 through a 3.4 W test bulb, check that the bulb lights up.

HINT: It will take a short time for the bulb to light up.

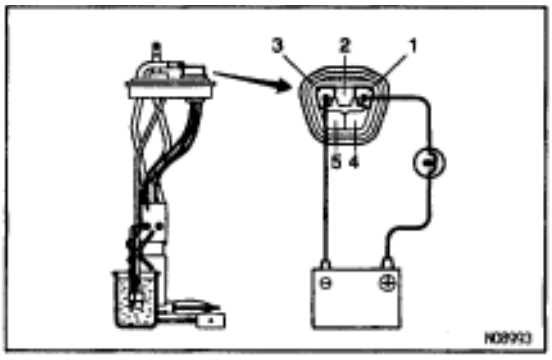

(b) Submerge the switch in fuel, check that the bulb goes out.

If operation is not as specified, replace the sender gauge.

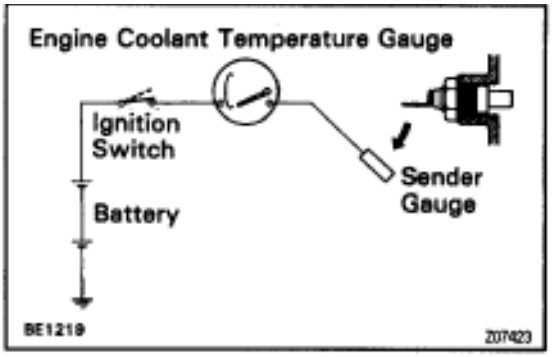

ENGINE COOLANT TEMPERATURE GAUGE INSPECTION

1. INSPECT RECEIVER GAUGE OPERATION

(a) Disconnect the connector from the sender gauge.

(b) Turn the ignition switch ON, check that the receiver gauge needle indicates COOL.

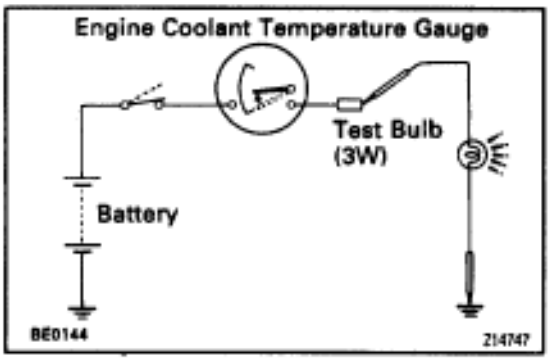

(c) Ground terminal on the wire harness side connector through a 3 W test bulb.

(d) Turn the ignition switch ON, check that the bulb lights up and the receiver gauge needle moves toward the hot side.
If operation is as specified, replace the sender gauge.
Then recheck the system.
If operation is not as specified, measure the receiver gauge resistance.

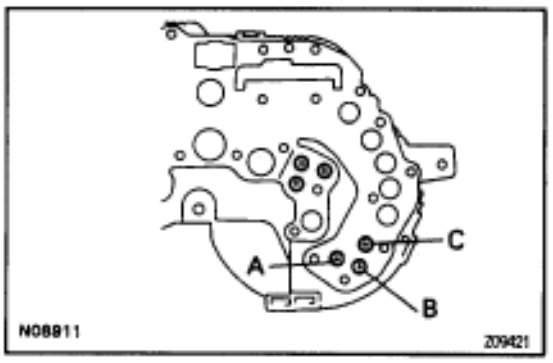

2. INSPECT RECEIVER GAUGE RESISTANCE

Measure the resistance between terminals.
HINT: Connect the test leads so that the current from the ohmmeter can flow according to the chart order.

Between terminals	Resistance (Ω)
A–B	Approx. 229.7
A–C	Approx. 54.0
B–C	Approx. 175.7

If resistance value is not as specified, replace the engine coolant temperature receiver gauge.

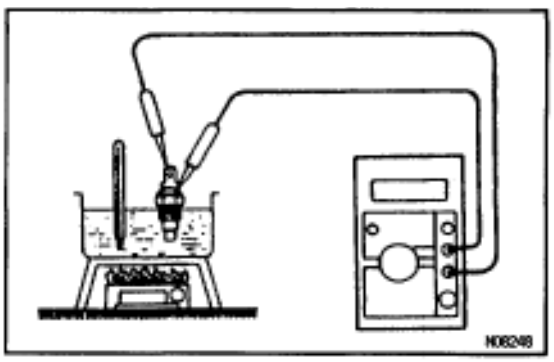

3. INSPECT SENDER GAUGE RESISTANCE

Measure the resistance between terminal and gauge body.

Temperature ˚C (˚F)	Resistance (Ω)
50 (122.0)	160 ~ 240
120 (248.0)	17.1 ~ 21.2

If resistance value is not as specified, replace the engine coolant temperature sender gauge.

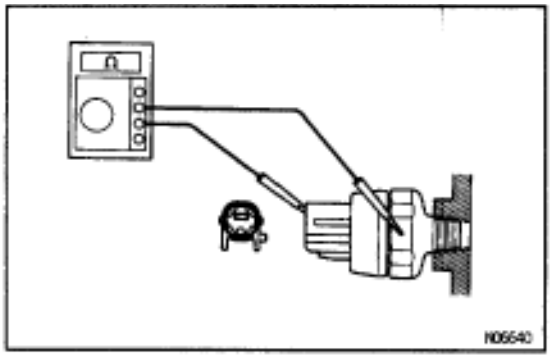

LOW OIL PRESSURE WARNING INSPECTION

1. INSPECT SWITCH

(a) Check that there is continuity between terminal and ground with the engine stopped.

(b) Check that there is no continuity between terminal and ground with the engine running.

HINT: Oil pressure should be over 29 kPa (0.3 kgf/ cm^2, 4.3 psi)

If operation is not as specified, replace the switch.

2. INSPECT WARNING LIGHT

(a) Disconnect the connector from the warning switch and ground terminal on the wire harness side connector.

(b) Turn the ignition switch ON, check that the warning light lights up.

If the warning light does not light up, test the bulb or inspect wire harness.

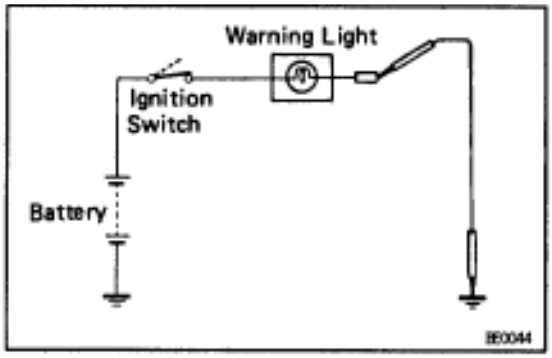

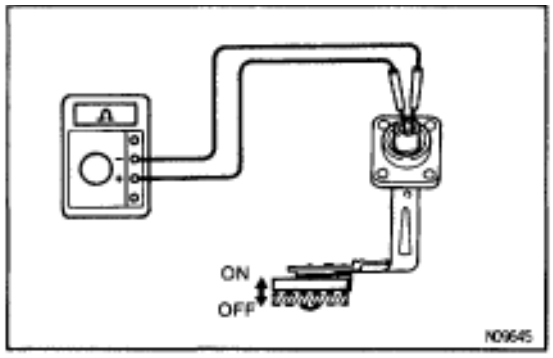

ENGINE OIL LEVEL WARNING INSPECTION

1. INSPECT SWITCH

(a) Check that there is continuity between terminal with the switch in each position.

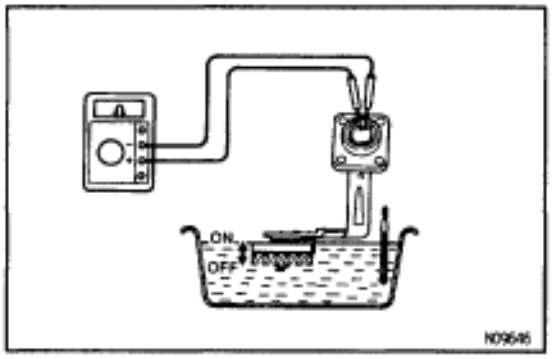

(b) Heat the switch to above 60˚C (140˚F) in an oil bath.

(c) Check that there is continuity between terminals with the switch ON (float up).

(d) Check that there is no continuity between terminals with the switch OFF (float down).

If operation is not as specified, replace the switch.

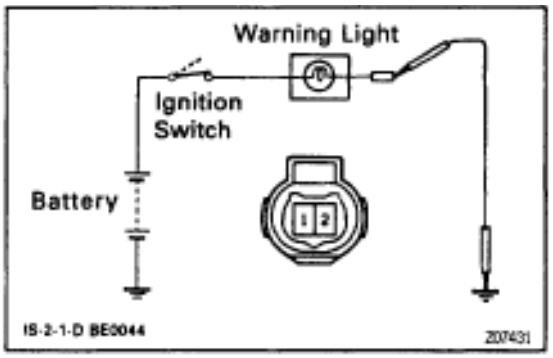

2. INSPECT WARNING LIGHT

(a) Disconnect the connector from the switch.

(b) Ground terminal 1 on the wire harness connector.

(c) Turn the ignition switch ON. Check that the warning light lights up approximately 40 seconds later.

If the warning light does not light up, inspect bulb or wire harness.

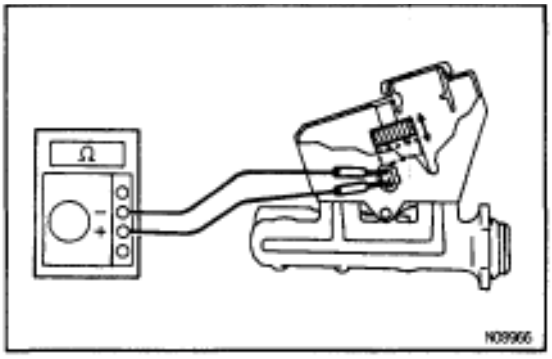

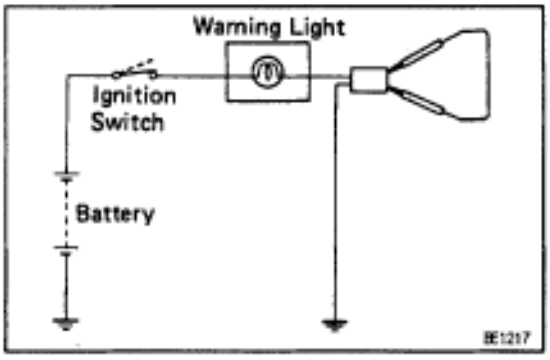

BRAKE FLUID LEVEL WARNING INSPECTION

1. INSPECT SWITCH

(a) Remove the reservoir tank cap and strainer.
(b) Disconnect the connector.
(c) Check that there is no continuity between terminals with the switch OFF (float up).
(d) Use syphon, etc. to take fluid out of the reservoir tank.
(e) Check that there is continuity between terminals with the switch ON (float down).
(f) Pour the fluid back in the reservoir tank.
If operation is not as specified, replace the switch.

2. INSPECT WARNING LIGHT

(a) Disconnect the connector from the brake fluid warning switch.
(b) Release the parking brake pedal.
(c) Connect terminals on the wire harness side of the level warning switch connector.
(d) Start the engine, check that the warning light lights up.
If the warning light does not light up, test the bulb or wire harness.

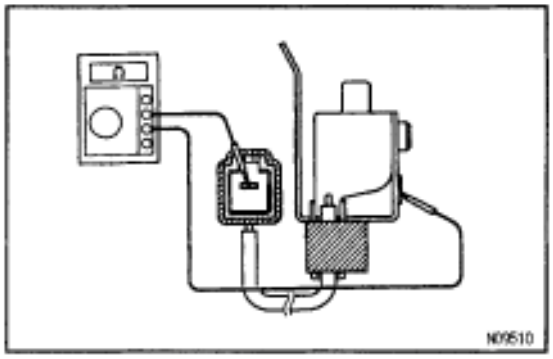

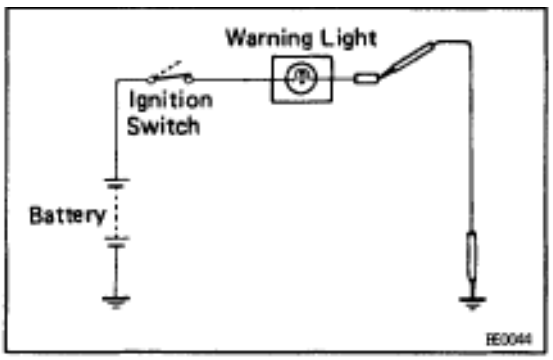

PARKING BRAKE WARNING INSPECTION

1. INSPECT SWITCH

(a) Check that there is continuity between terminal and switch body with the switch ON (switch pin released).
(b) Check that there is no continuity between terminal and switch body with the switch OFF (switch pin pushed in).
If operation is not as specified, replace the switch or inspect ground point.

2. INSPECT WARNING LIGHT

(a) Disconnect the connector from the parking brake switch and the brake fluid warning switch.
(b) Ground terminal on the wire harness side connector.
(c) Start the engine, check that the warning light lights up.
If the warning light does not light up, test the bulb or inspect wire harness.

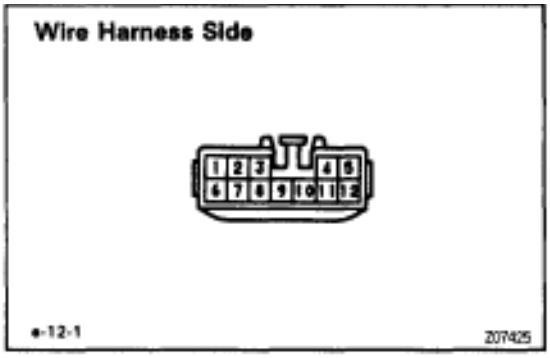

LIGHT FAILURE SENSOR INSPECTION

1. INSPECT SENSOR CIRCUIT

Disconnect the connector from the sensor and inspect the connector on the wire harness side, as shown.

Tester connection to terminal number	Condition	Specified condition
1–Ground	Constant	Continuity*
2–Ground	Constant	Continuity*
9–Ground	Constant	Continuity*
10–Ground	Constant	Continuity*
11–Ground	Constant	Continuity
12–Ground	Constant	Continuity*
3–Ground	Light control switch position OFF	No Voltage
3–Ground	Light control switch position TAIL or HEAD	Battery positive voltage
4–Ground	Ignition switch position LOCK or ACC	No voltage
4–Ground	Ignition switch position ON	Battery positive voltage
7–Ground	Stop light switch position OFF	No voltage
7–Ground	Stop light switch position ON	Battery positive voltage
8–Ground	Engine condition Stop	No voltage
8–Ground	Engine condition Running	Battery positive voltage

*: There is resistance because this circuit is grounded through the bulb.

If circuit is as specified, replace the sensor.

If the circuit is not as specified, inspect the circuits connected to other parts.

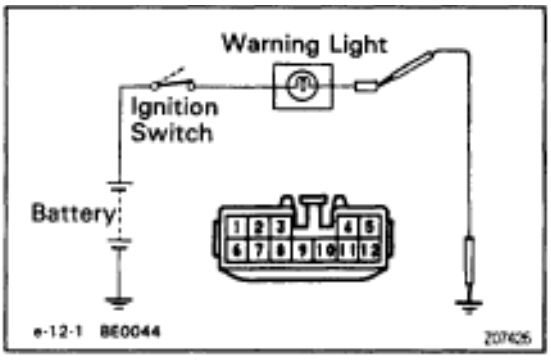

2. INSPECT WARNING LIGHT

(a) Disconnect the connector from the light failure sensor and ground terminal 4 on the wire harness side connector.

(b) Start the engine, check that the warning light lights up.

If the warning light does not light up, test the bulb or inspect wire harness.

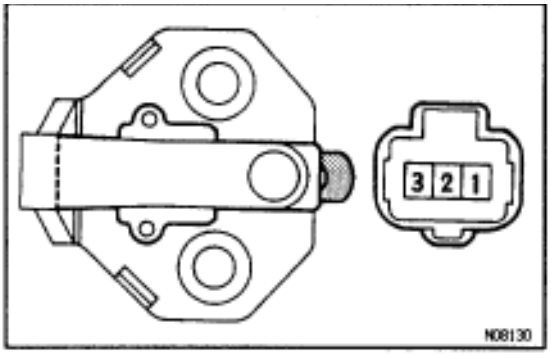

OPEN DOOR WARNING INSPECTION

1. INSPECT DOOR COURTESY SWITCH

Switch Position	Tester connection to terminal number	Specified condition
ON (Switch pin released)	1–2 2–3	Continuity
OFF (Switch pin pushed in)	–	No continuity

If continuity is not as specified, replace the switch.

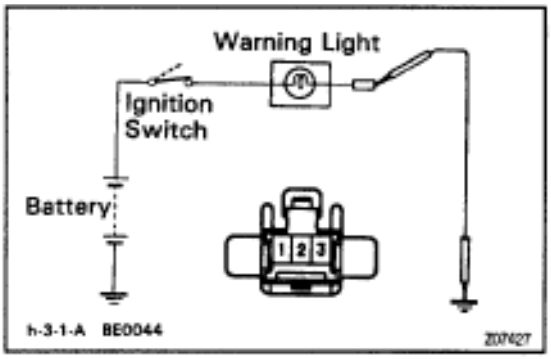

2. INSPECT WARNING LIGHT

Disconnect the connector from the door courtesy switch, and ground terminal 1 on the wire harness side connector and check that the warning light lights up.

If the warning light does not light up, inspect the bulb or wire harness.

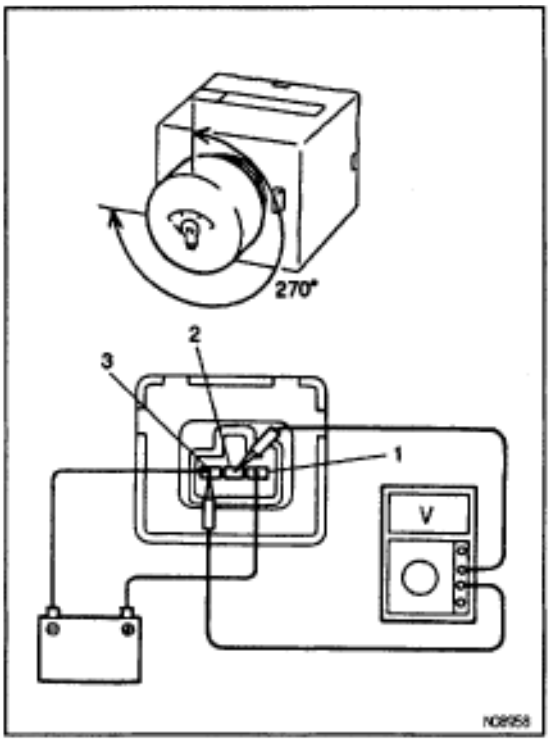

LIGHT CONTROL RHEOSTAT INSPECTION

INSPECT LIGHT CONTROL RHEOSTAT

(a) Connect the positive (+) lead from the battery to terminal 1 and negative lead (–) to terminal 3.

(b) Connect the positive (+) lead from the voltmeter to terminal 2 and negative lead to terminal 3.

(c) Turn the rheostat knob and check that the voltage changes.

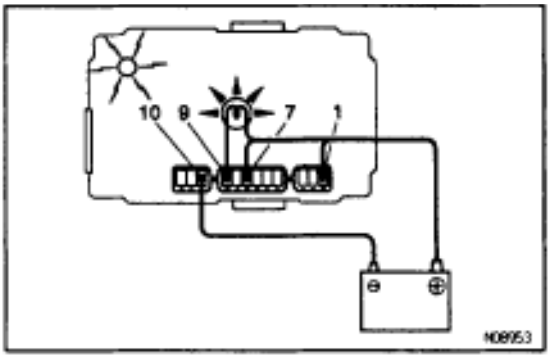

SEAT BELT WARNING INSPECTION

1. INSPECT INTEGRATION RELAY OPERATION

(a) Connect the positive (+) lead from the battery to terminals 1 and 7.

(b) Connect the positive (+) lead from the battery to terminal 9 through a 3.4W test bulb.

(c) Check that the test bulb lights up and buzzer sounds for 4–8 seconds when the negative (–) lead from the battery is connected to terminal 10.

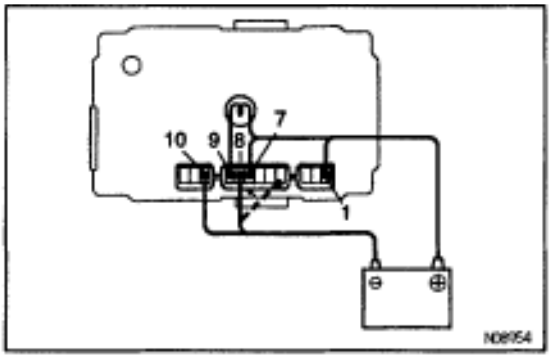

(d) Check that the buzzer sounding in (c) stops when the negative (–) lead from the battery is connected to terminal 8. If operation is not as specified, replace the integration relay.

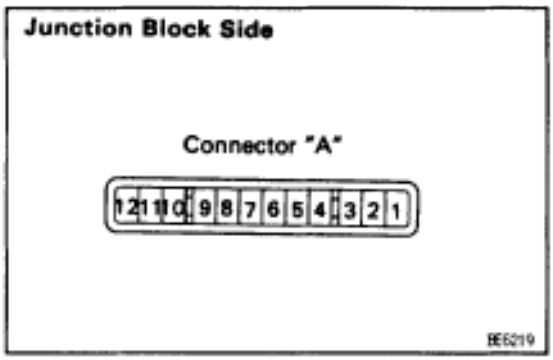

2. INSPECT RELAY CIRCUIT

Remove the relay from the junction block No.1 and inspect the connectors on the junction block side.

Tester connection to terminal number	Condition	Specified condition
4–Ground	Driver's door open	Continuity
4–Ground	Driver's door close	No continuity
5–Ground	Ignition key Set	Continuity
5–Ground	Ignition key remove	No continuity
8–Ground	Driver's seat belt fasten	Continuity
8–Ground	Driver's seat belt unfasten	No continuity
10–Ground	Constant	Continuity
1–Ground	Constant	Battery positive voltage
9–Ground	Ignition switch position ON	Battery positive voltage
9–Ground	Ignition switch position LOCK or ACC	No voltage

If circuit is not as specified, try replacing the relay with a new one.

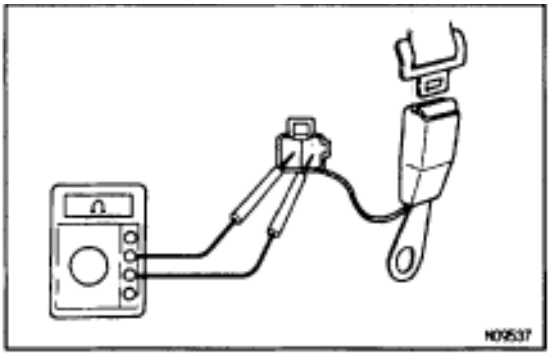

3. INSPECT BUCKLE SWITCH CONTINUITY

(a) Check that there is continuity between terminals 1 and 2 on the switch side connector with the switch ON (belt fastened).

(b) Check that there is no continuity between terminals 1 and 2 on the switch side connector with the switch OFF (belt unfastened).

If operation is not as specified, replace the seat belt inner belt.

If the circuit is not as specified, inspect the circuits connected to other parts.

SEAT HEATER SYSTEM
PARTS LOCATION

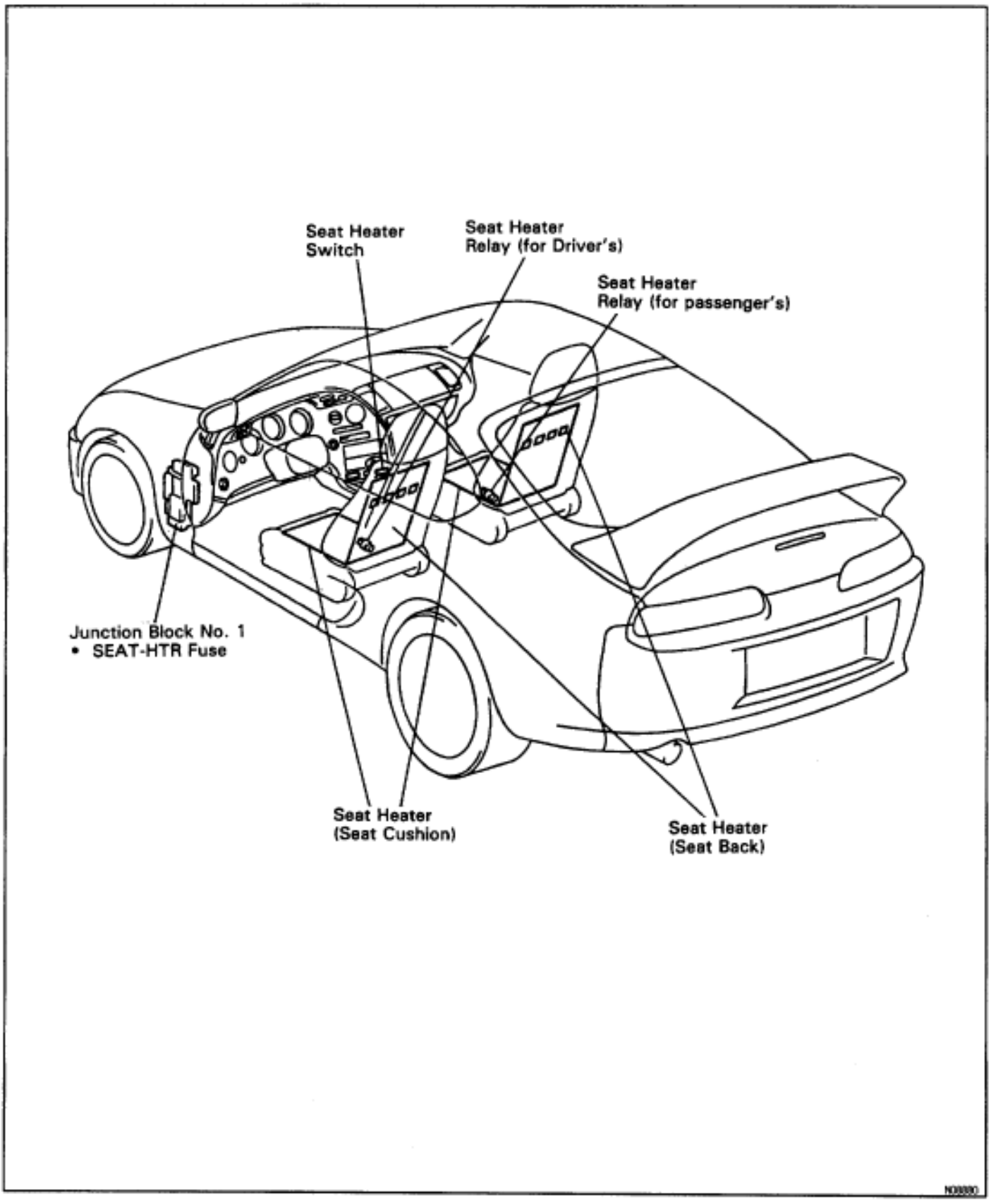

TROUBLESHOOTING

The table below will be useful for you in troubleshooting these electrical problems. The most likely causes of the malfunction are shown in the order of their probability. Inspect each part in the order shown and replace the part when it is found to be faulty.

Trouble	Parts name	(See page)
Seat heaters do not operate (Driver's and Passenger's)	1. SEAT HTR Fuse 2. Wire Harness	(BE–6)
Driver's seat heater does not operate	1. Seat Heater Switch (Driver's) 2. Seat Heater 3. Wire Harness	(BE–58) (BE–59)
Passenger's seat heater does not operate	1. Seat Heater Switch (Passenger's) 2. Seat Heater 3. Wire Harness	(BE–58) (BE–59)
Seat heater temperature is too hot	1. Seat Heater	(BE–59)

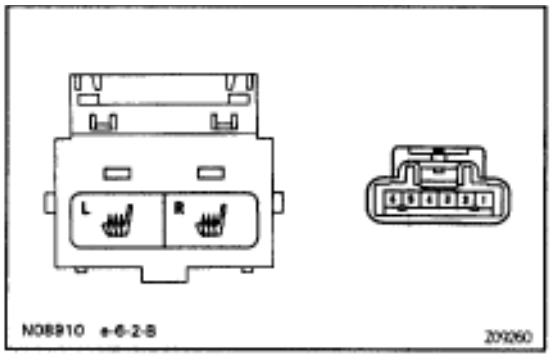

SEAT HEATER SWITCH INSPECTION

1. INSPECT SWITCH CONTINUITY

Condition	Tester connection to terminal number	Specified condition
Switch ON (LEFT)	2–4	Continuity
Switch ON (RIGHT)	4–6	Continuity
Switch OFF	–	No continuity
Illumination circuit	3–5	Continuity

If continuity is not as specified, replace the switch or bulb.

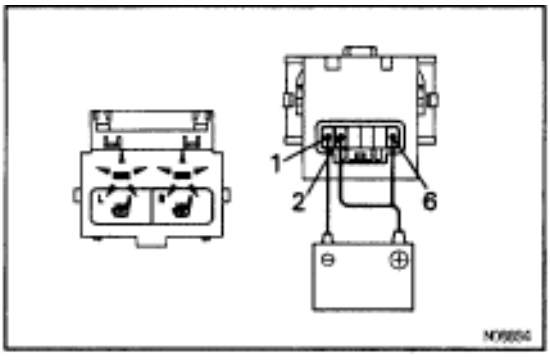

2. INSPECT SWITCH INDICATOR

(a) Connect the positive (+) lead from the battery to terminal 2 and 6 and the negative (–) lead to terminal 1.

(b) Push the switches, check that the indicator lights up. If operation is not as specified, replace the switch and inspect the circuits connected to other parts.

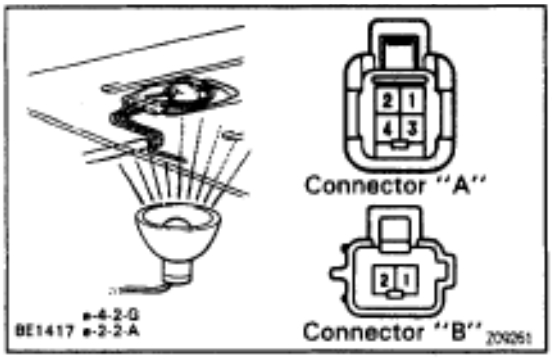

SEAT HEATER INSPECTION

1. INSPECT SEAT CUSHION CONTINUITY

(a) Heat the thermostat with a light.

(b) Inspect the seat heater continuity between terminals.

Tester connection to terminal number	Condition	Specified condition
A1–A2	Constant	Continuity
A1–B2	Constant	Continuity
A2–B2	Constant	Continuity
A3–A4	Seat heater temperature below 25˚C(77˚F)	Continuity
A4–B1	Seat heater temperature below 25˚C(77˚F)	Continuity
A3–A4	Seat heater temperature above 45˚C(113˚F)	No Continuity
A4–B1	Seat heater temperature above 45˚C(113˚F)	No Continuity

If continuity is not as specified, replace the seat cushion pad.

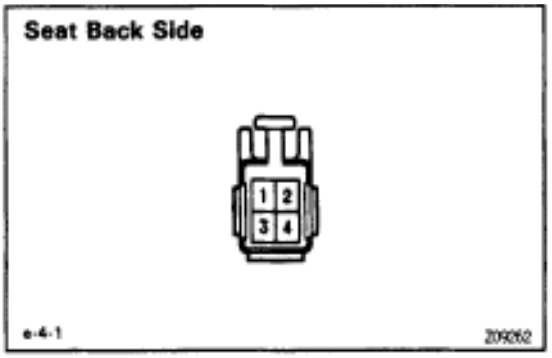

2. INSPECT SEAT BACK CONTINUITY

Inspect the seat heater continuity between terminals, as shown.

Tester connection to terminal number	Condition	Specified condition
1–3	Constant	Continuity
2–4	Constant	Continuity

If continuity is not as specified, replace the seat back pad.

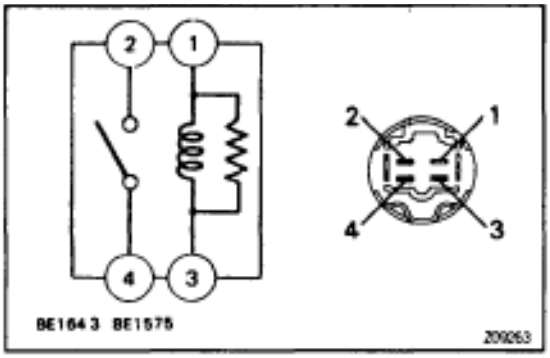

SEAT HEATER RELAY INSPECTION

INSPECT RELAY CONTINUITY

Condition	Tester connection to terminal number	Specified condition
Constant	1–3	Continuity
Apply B+ between Terminals 1 and 3.	2–4	Continuity

If continuity is not as specified, replace the relay.

ELECTRIC TENSION REDUCER SYSTEM

PARTS LOCATION

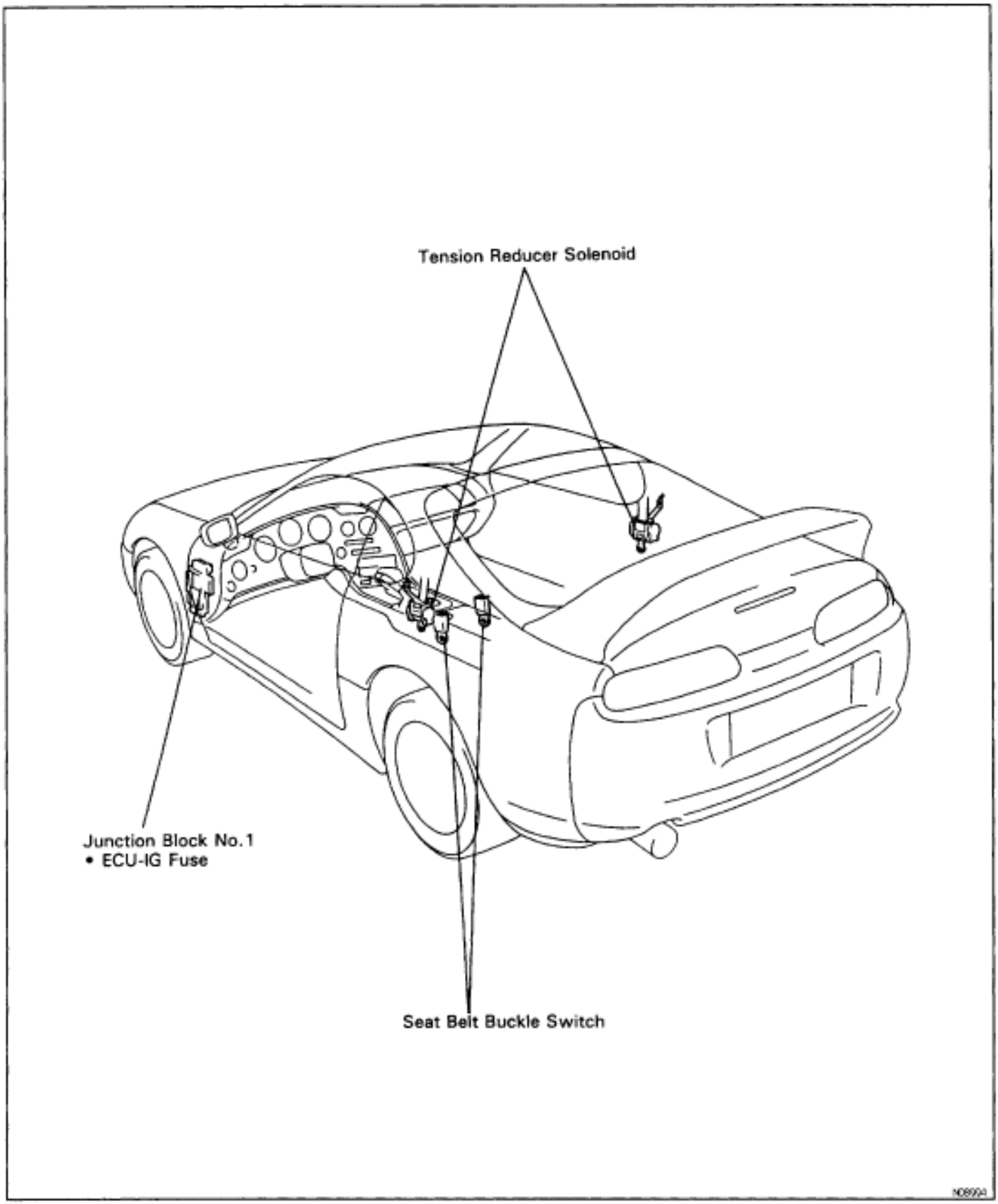

TROUBLESHOOTING

The table below will be useful for you in troubleshooting these electrical problems. The most likely causes of the malfunction are shown in the order of their probability. Inspect each part in the order shown, and replace the part when it is found to be faulty.

Trouble	Parts name	(See page)
Tension Reducer does not operate. (Driver's and Passenger's)	1. ECU–IG fuse 2. Wire Harness	(BE–6)
Tension Reducer does not operate. (Only one side)	1. Buckle Switch 2. Tension Reducer Solenoid 3. Wire Harness	(BE–56) (BE–62)

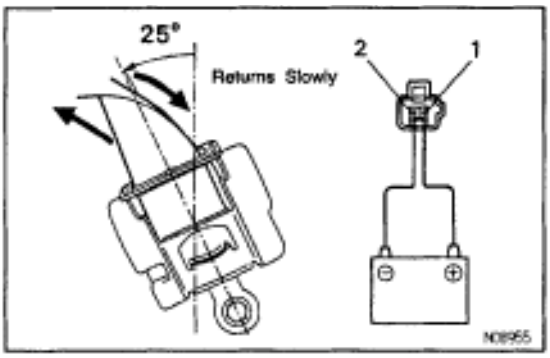

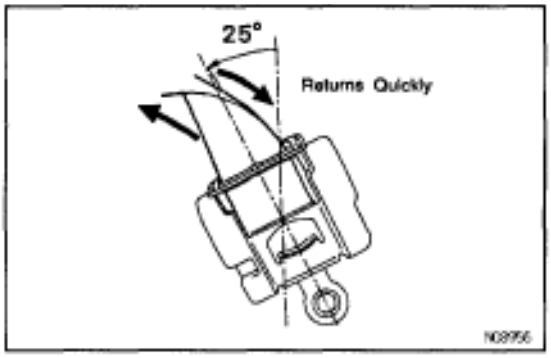

TENSION REDUCER SOLENOID INSPECTION

INSPECT SOLENOID OPERATION

(a) Connect the positive (+) lead from the battery to terminal 1, and negative (–) lead to terminal 2.

(b) Pull the belt upward and check that the belt is slowly retracted when released.

(c) Disconnect the lead from the battery.

(d) Pull the belt upward and check that the belt is retracted more quickly when released than in (b).
HINT: Do not tilt the retractor.
If the operation is not as specified, replace the front seat outer belt assembly.

BUCKLE SWITCH INSPECTION

See page BE–56

DEFOGGER SYSTEM
PARTS LOCATION

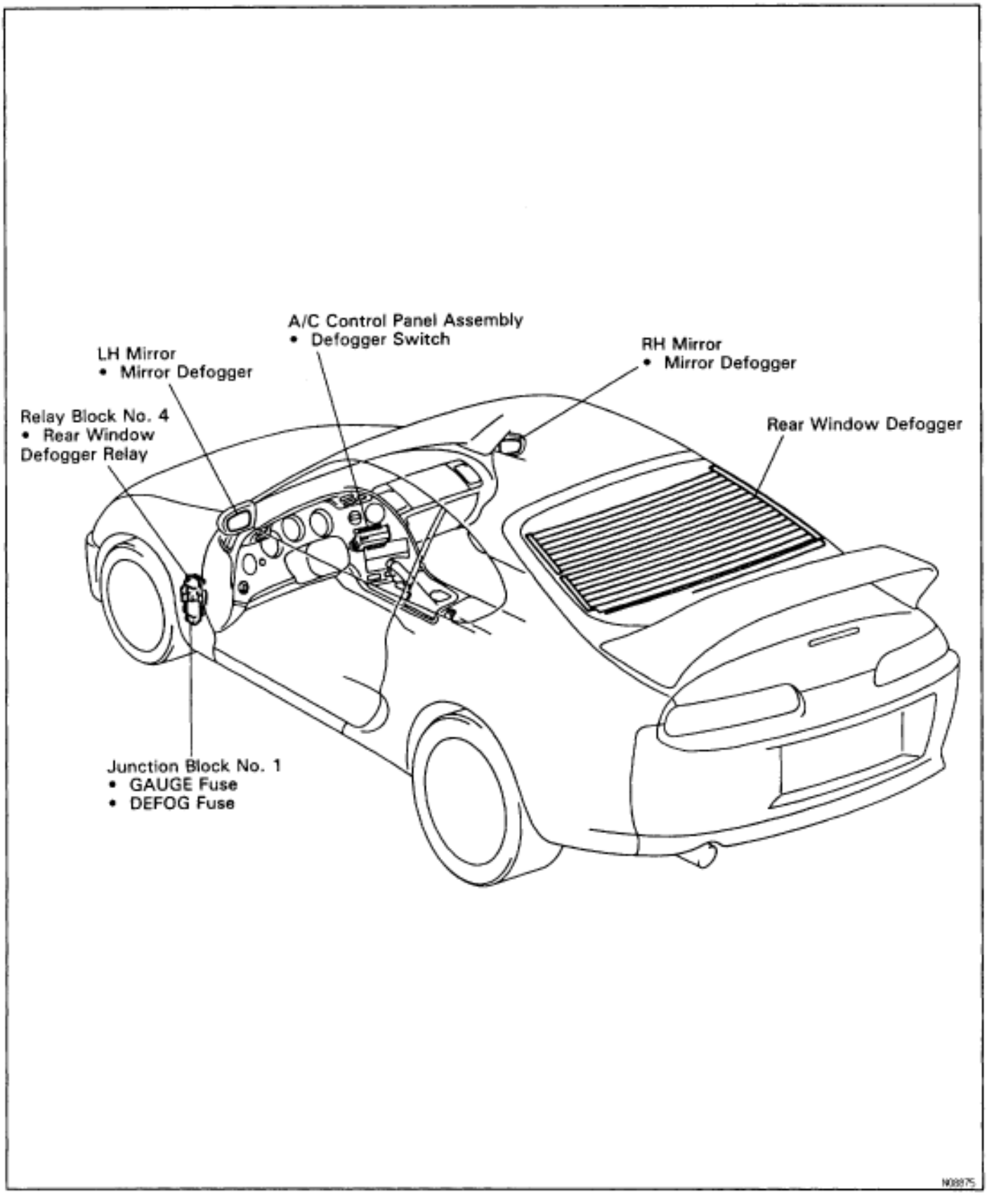

TROUBLESHOOTING

The table below will be useful for you in troubleshooting these electrical problems. The most likely causes of the malfunction are shown in the order of their probability. Inspect each part in the order shown, and replace the part when it is found to be faulty.

Trouble	Parts name	(See page)
All defogger systems do not operate	1. GAUGE Fuse	(BE–6)
	2. DEFOG Fuse	(BE–6)
	3. Defogger Relay	(BE–65)
	4. Defogger Switch	(BE–64)
	5. A/C Amplifier	(AC Section)
	6. Wire Harness	
Rear window defogger does not operate	1. Defogger Wires	(BE–65)
	2. Wire Harness	
Mirror defogger does not operate	1. MIR–HTR Fuse	(BE–6)
	2. Mirror Defogger	(BE–66)
	3. Wire Harness	

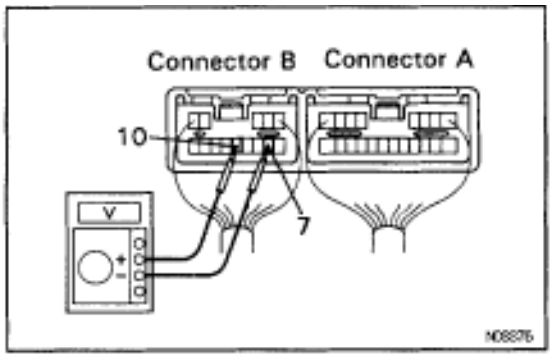

DEFOGGER SWITCH INSPECTION

INSPECT SWITCH OPERATION

(a) Connect the positive (+) lead from the voltmeter to terminal 7 of connector B and the negative (–) lead from voltmeter to terminal 10 of connector B.

(b) When the switch is off, the voltage should be approx. 12 V.

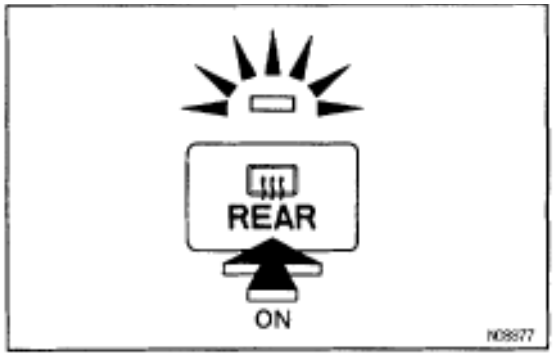

(c) When the switch is on, check that the indicator light lights up and that the voltage is less than 1 V.

(d) After 15 minutes, check that the switch is off and the voltage is approx. 12 V.

A/C AMPLIFIER INSPECTION

See A/C section

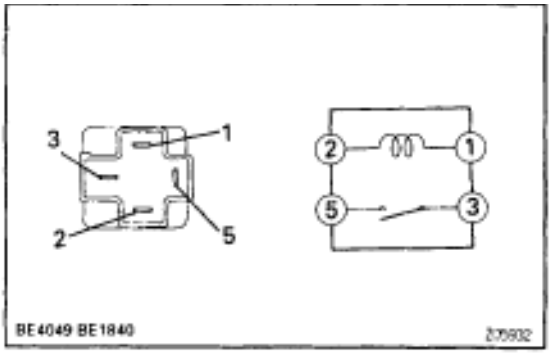

DEFOGGER RELAY INSPECTION

INSPECT RELAY CONTINUITY

Condition	Tester connection to terminal number	Specified condition
Constant	1–2	Continuity
Apply B+ between Terminals 1 and 2.	3–5	Continuity

If continuity is not as specified, replace the relay.

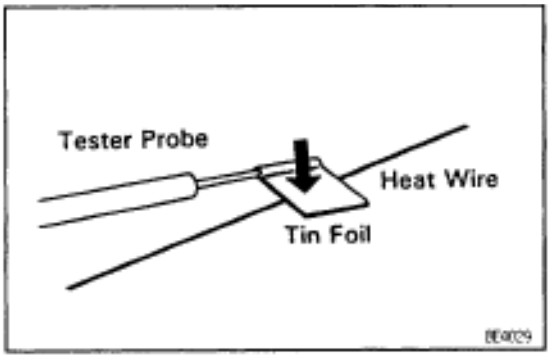

DEFOGGER WIRE INSPECTION

NOTICE:

- **When cleaning the glass, use a soft, dry cloth, and wipe the glass in the direction of the wire. Take care not to damage the wires.**
- **Do not use detergents or glass cleaners with abrasive ingredients.**
- **When measuring voltage, wind a piece of tin foil around the top of the negative probe and press the foil against the wire with your finger, as shown.**

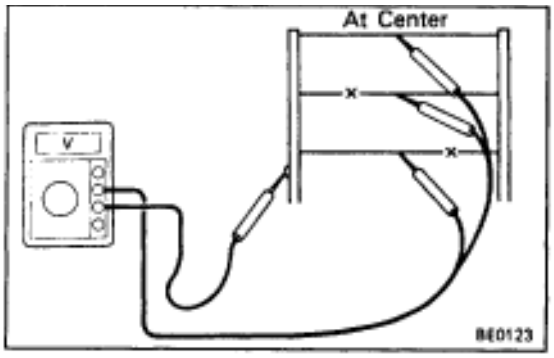

(a) Turn the ignition switch ON.

(b) Turn the defogger switch ON.

(c) Inspect the voltage at the center of each heat wire, as shown.

Voltage	Criteria
Approx. 5V	Okay (No break in wire)
Approx. 10V or 0V	Broken wire

HINT: If there is approximately 10 V, the wire is broken between the center of the wire and the positive (+) end. If there is no voltage, the wire is broken between the center of the wire and ground.

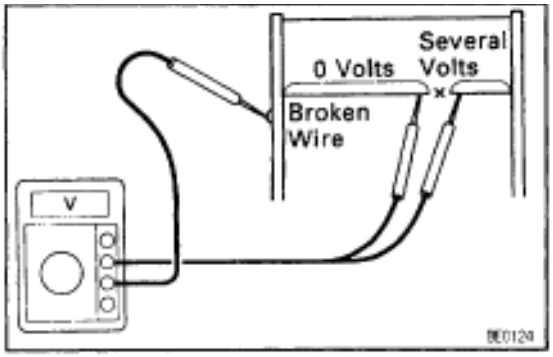

(d) Place the voltmeter positive (+) lead against the defogger positive (+) terminal.

(e) Place the voltmeter negative (–) lead with the foil strip against the heat wire at the positive (+) terminal end and slide it toward the negative (–) terminal end.

(f) The point where the voltmeter deflects from zero to several V is the place where the heat wire is broken.

HINT: If the heat wire is not broken, the voltmeter indicates O V at the positive (+) end of the heat wire but gradually increases to about 12 V as the meter probe is moved to the other end.

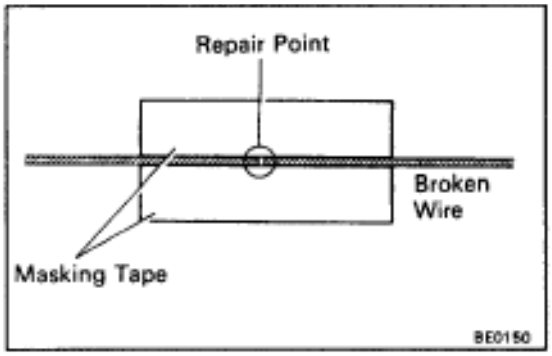

DEFOGGER WIRE REPAIR

(a) Clean the broken wire tips with a grease, wax and silicone remover.
(b) Place the masking tape along both sides of the wire to be repaired.
(c) Thoroughly mix the repair agent (DuPont paste No. 4817).

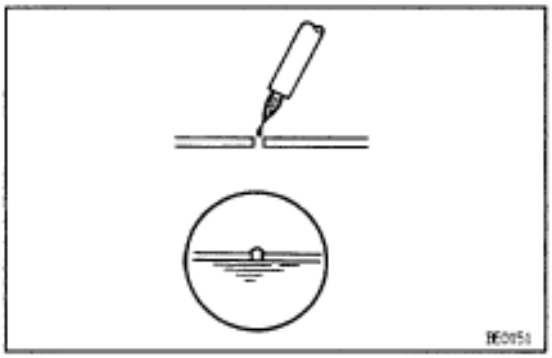

(d) Using a fine tip brush, apply a small amount to the wire.
(e) After a few minutes, remove the masking tape.
(f) Allow the repair to stand at least 24 hours.

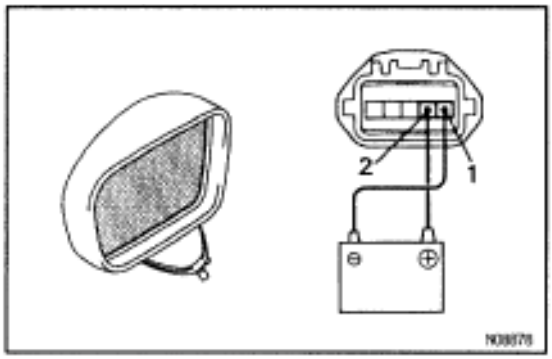

MIRROR DEFOGGER INSPECTION

1. INSPECT MIRROR DEFOGGER OPERATION

(a) Connect the positive (+) lead from the battery to terminal 2 and the negative (–) lead to terminal 1.
(b) Check that the mirror becomes warm.
HINT: It will take a short time for the mirror to become warm.
If the mirror does not become warm, replace the mirror assembly.

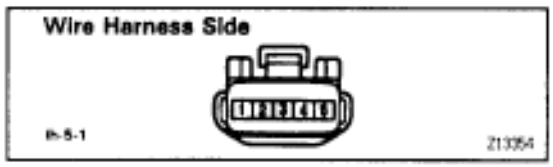

2. INSPECT MIRROR DEFOGGER CIRCUIT

Disconnect the connector from the outside mirror and inspect the connector on the wire harness side, as shown.

Tester connection to terminal number	Condition	Specified condition
1–Ground	Constant	Continuity
2–Ground	Ignition switch ON (Defogger switch OFF)	No voltage
2–Ground	Ignition switch ON (Defogger switch ON)	Battery positive voltage

If the circuit is not as specified, inspect the circuits connected to other parts.

POWER WINDOW CONTROL SYSTEM

PARTS LOCATION

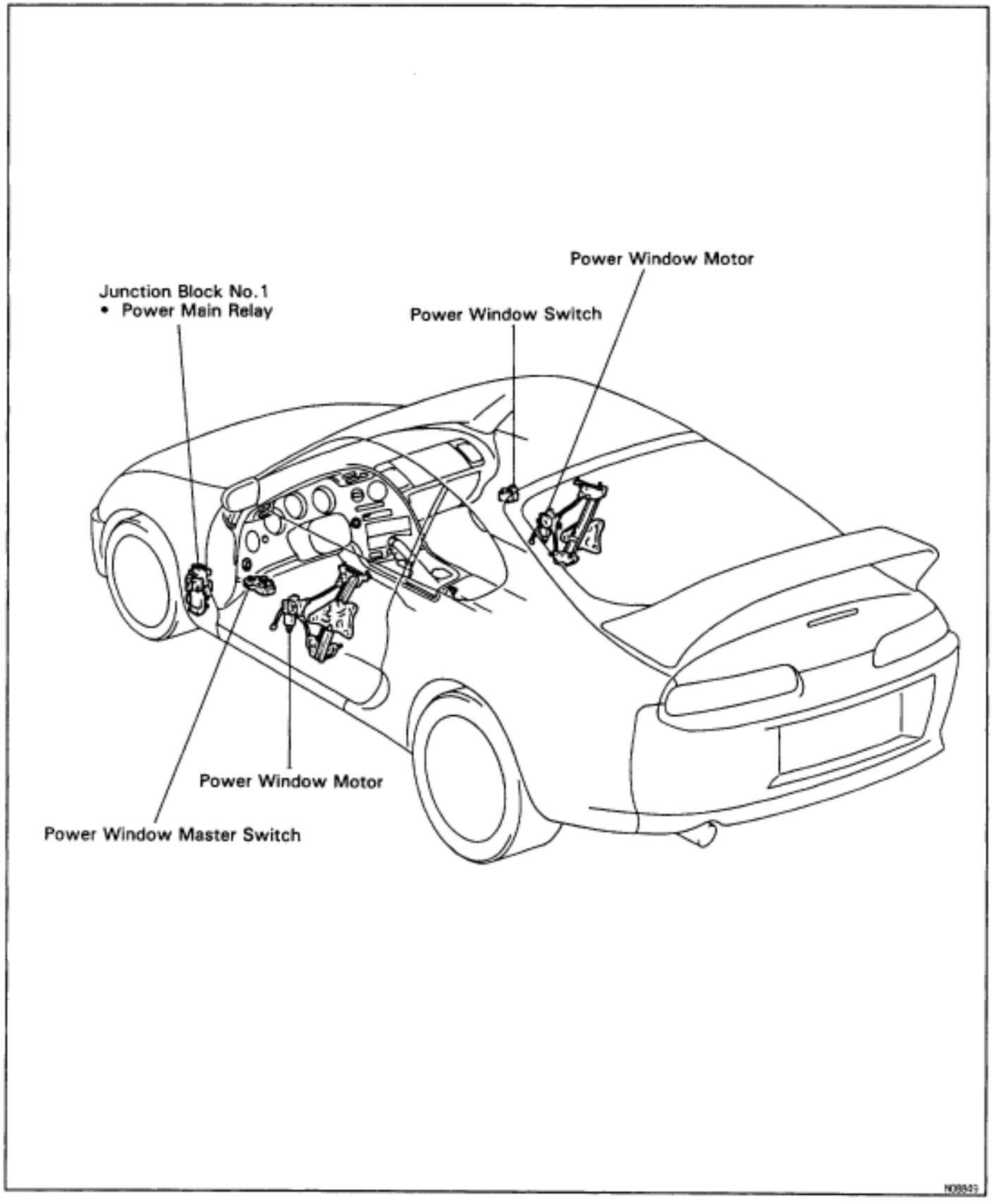

TROUBLESHOOTING

The table below will be useful for you in troubleshooting these electrical problems. The most likely causes of the malfunction are shown in the order of their probability. Inspect each part in the order shown, and replace the part when it is found to be faulty.

Trouble	Parts name	(See page)
*1 Power window does not operate.	1. ALT Fuse 2. POWER Fuse 3. AM 1 Fuse 4. DOOR Fuse 5. Ignition Switch 6. Power Window Master Switch 7. Wire Harness	(BE–5) (BE–5) (BE–5) (BE–6) (BE–8) (BE–69)
*2 Power Window does not operate.	1. GAUGE Fuse 2. Power Main Relay 3. Ignition Switch 4. Power Window Master Switch 5. Wire Harness	(BE–6) (BE–73) (BE–8) (BE–69)
”One Touch Power Window System” does not operate.	1. Power Window Master Switch	(BE–69)
Only one window glass does not move.	1. Power Window Master Switch 2. Power Window Switch 3. Power Window Motor 4. Wire Harness	(BE–69) (BE–71) (BE–71)
”Window Lock System” does not operate.	1. Power Window Master Switch	(BE–69)
Illumination does not light up.	1. Power Window Master Switch	(BE–69)

*1 Power door lock does not operate.
*2 Power door lock is normal.

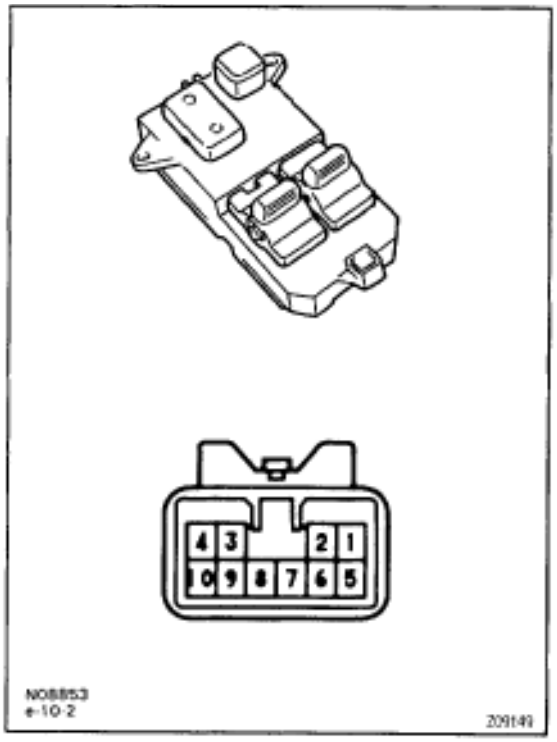

POWER WINDOW MASTER SWITCH INSPECTION

1. INSPECT SWITCH CONTINUITY

Driver's Switch

Switch position	Tester connection to terminal number	Specified condition
UP	4–10 8–9	Continuity
OFF	8–10 8–9	Continuity
DOWN	4–9 8–10	Continuity

Passenger's Switch (Window unlock)

Switch position	Tester connection to terminal number	Specified condition
UP	4–5 7–8	Continuity
OFF	5–8 7–8	Continuity
DOWN	4–7 5–8	Continuity

Passenger's Switch (Window lock)

Switch position'	Tester connection to terminal number	Specified condition
UP	4–5	Continuity
OFF	5–7	Continuity
DOWN	4–7	Continuity

If continuity is not as specified, replace the switch.

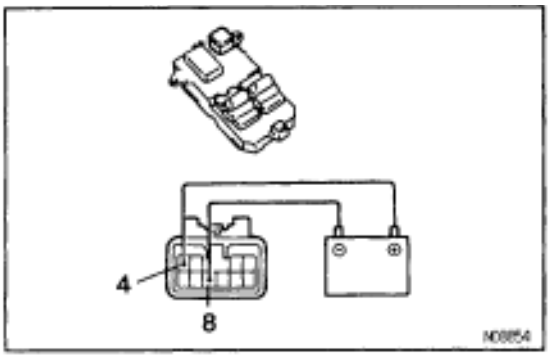

2. INSPECT SWITCH ILLUMINATION

Connect the positive (+) lead from the battery to terminal 4 and the negative (–) lead to terminal 8, check that the illumination lights up.

If operation is not as specified, replace the master switch.

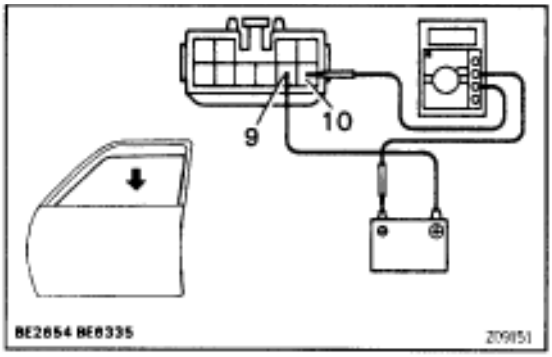

3. INSPECT ONE TOUCH POWER WINDOW SYSTEM

Using an ammeter.

(a) Disconnect the connector from the master switch.

(b) Connect the positive (+) lead from the ammeter to terminal 9 on the wire harness side connector and the negative (–) lead to negative terminal of the battery.

(c) Connect the positive (+) lead from the battery to terminal 10 on the wire harness side connector.

(d) As the window goes down, check that the current flow is approximately 7 A.

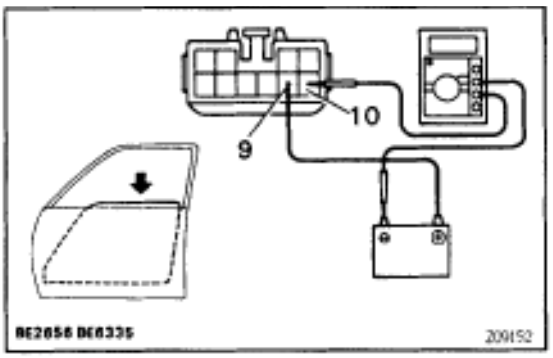

(e) Check that the current increases up to approximately 14.5 A or more when the window stops going down.
HINT: The circuit breaker opens some 4–90 seconds after the window stops going down, so that check must be made before the circuit breaker operates.
If the operation is as specified, replace the master switch.

Using an ammeter with a current–measuring probe.

(a) Remove the master switch with connector connected.

(b) Attach a current–measuring probe to terminal 4 of the wire harness.

(c) Turn the ignition switch ON and set the power window switch in the down position.

(d) As the window goes down, check that the current flow is approximately 7 A.

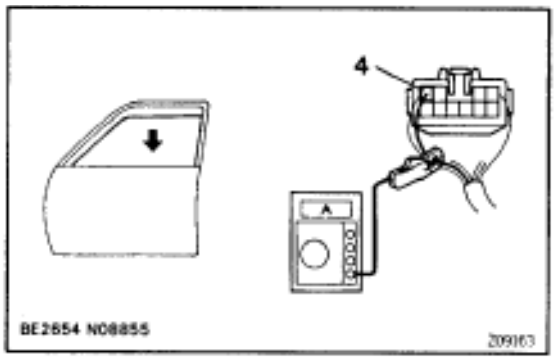

(e) Check that the current increases up to approximately 14.5 A or more when the window stops going down.
HINT: The circuit breaker opens some 9–90 seconds after the window stops going down, so that check must be made before the circuit breaker operates.
If operation is as specified, replace the master switch.

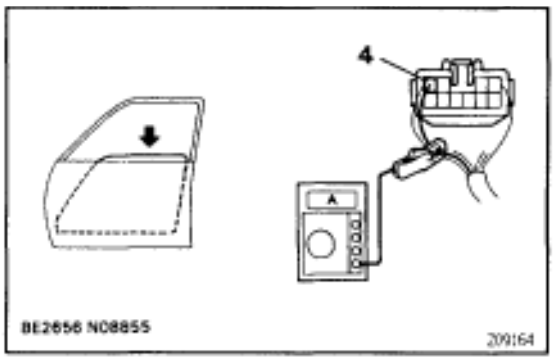

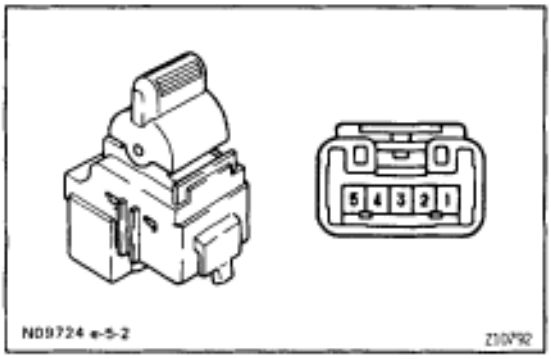

POWER WINDOW SWITCH INSPECTION

INSPECT SWITCH CONTINUITY

Switch position	Tester connection to terminal number	Specified condition
UP	1–4 3–5	Continuity
OFF	1–2 3–5	Continuity
DOWN	1–2 3–4	Continuity

If continuity is not as specified, replace the switch.

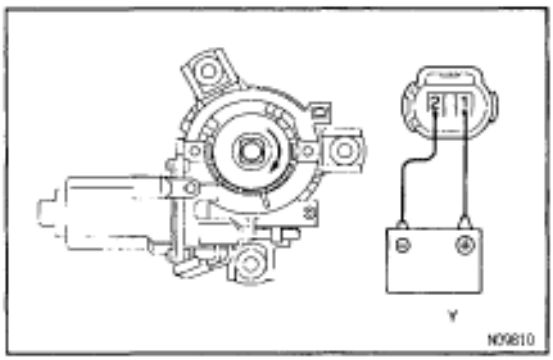

POWER WINDOW MOTOR INSPECTION

1. INSPECT MOTOR OPERATION

Driver's Door

(a) Connect the positive (+) lead from the battery to terminal 1 and the negative (–) lead to terminal 2, check that the motor turns clockwise.

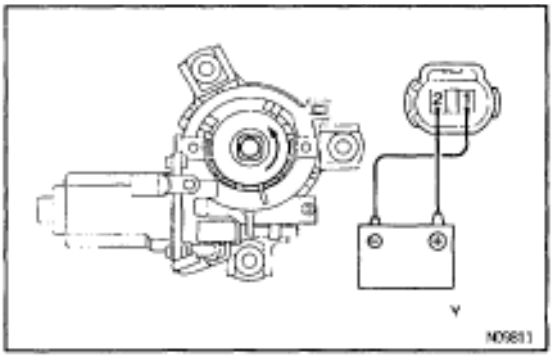

(b) Reverse the polarity, check that the motor turns counterclockwise.

If operation is not as specified, replace the motor.

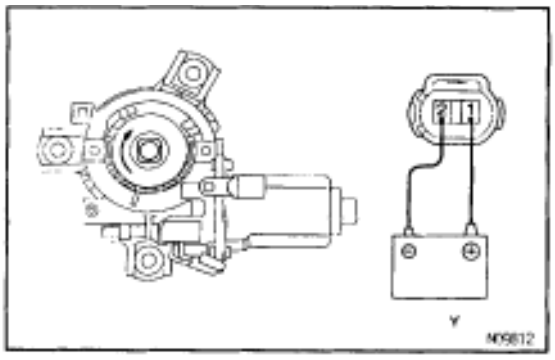

Passenger's Door

(a) Connect the positive (+) lead from the battery to terminal 1 and the negative (–) lead to terminal 2, check that the motor turns clockwise.

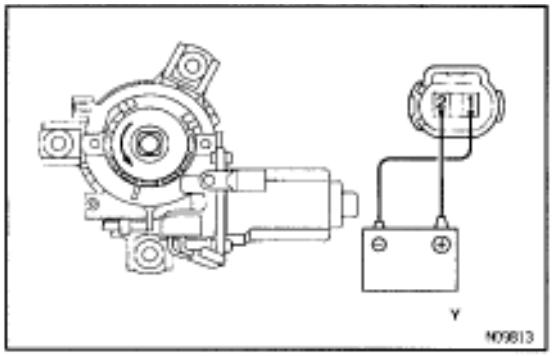

(b) Reverse the polarity, check that the motor turns counterclockwise.
If operation is not as specified, replace the motor.

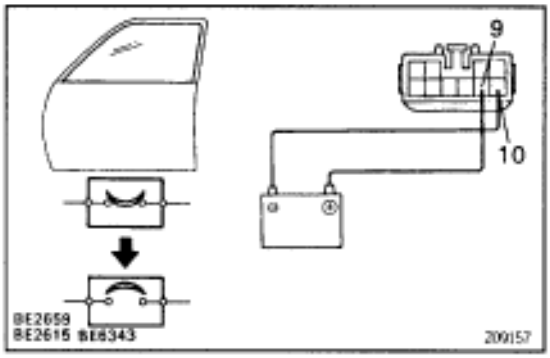

2. INSPECT PTC OPERATION

Driver's Door

(a) Disconnect the connector from the master switch.
(b) Connect the positive (+) lead from the battery to terminal 9 and the negative (–) lead to terminal 10 on the wire harness side connector and raise the window to the fully closed position.
(c) Continue to apply voltage, check that there is a PTC operation noise within approximately 4 to 90 seconds.

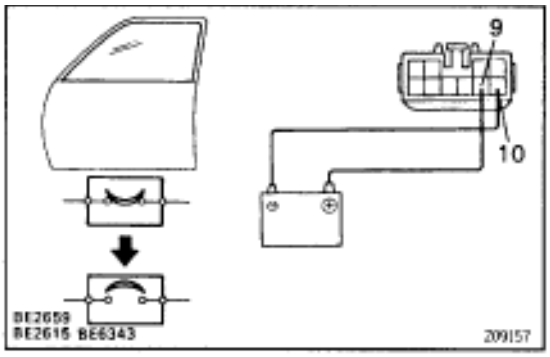

(d) Reverse the polarity, check that the window begins to descend within approximately 60 seconds.
If operation is not as specified, replace the motor.

Passenger's Door

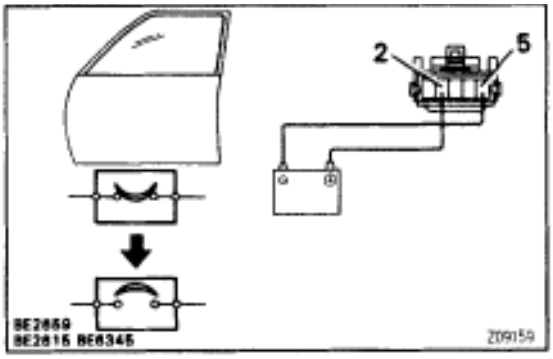

(a) Disconnect the connector from the power window switch.
(b) Connect the positive (+) lead from the battery to terminal 2 and the negative (–) lead to terminal 5 on the wire harness side connector, and raise the window to the fully closed position.
(c) Continue to apply voltage, check that there is a PTC operation noise within approximately 4 to 90 seconds.

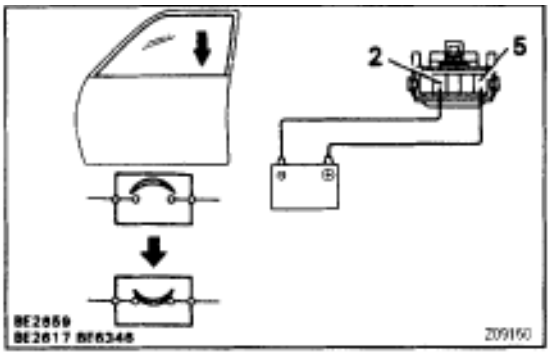

(d) Reverse the polarity, check that the window begins to descend within approximately 60 seconds.
If operation is not as specified, replace the motor.

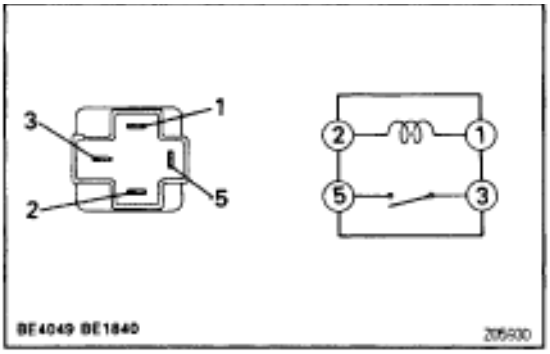

POWER MAIN RELAY INSPECTION

INSPECT RELAY CONTINUITY

Condition	Tester connection to terminal number	Specified condition
Constant	1–2	Continuity
Apply B+ between terminals 1 and 2.	3–5	Continuity

If continuity is not as specified, replace the relay.

POWER SEAT CONTROL SYSTEM

PARTS LOCATION

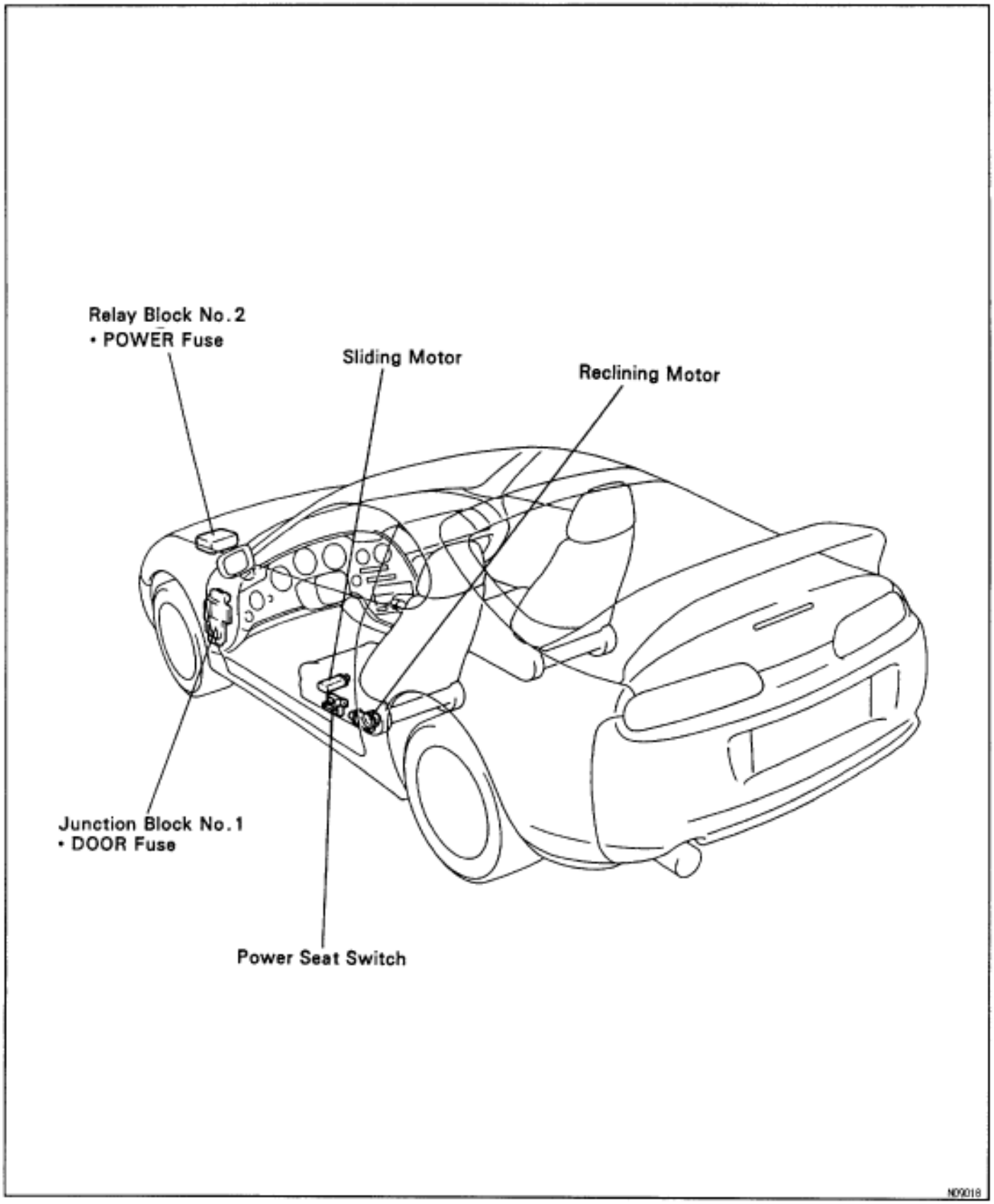

TROUBLESHOOTING

The table below will be useful for you in troubleshooting these electrical problems. The most likely causes of the malfunction are shown in the order of their probability. Inspect each part in the order shown, and replace the part when it is found to be faulty.

Trouble	Parts name	(See page)
Power seat does not operate	1. POWER Fuse 2. DOOR Fuse 3. Wire Harness 4. Power Seat Switch	(BE–5) (BE–6) (BE–75)
”Slide operation” does not operate	1. Power Seat Switch 2. Wire Harness 3. Sliding Motor	(BE–75) (BE–76)
”Reclining operation” does not operate	1. Power Seat Switch 2. Wire Harness 3. Reclining Motor	(BE–75) (BE–77)

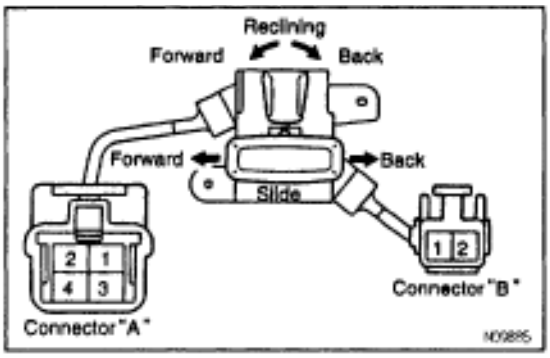

POWER SEAT SWITCH INSPECTION

INSPECT SWITCH CONTINUITY

Slide

Switch position	Tester connection to terminal number	Specified condition
Forward	A1–A3 A2–A4	Continuity
Off	A1–A3 A1–A4	Continuity
Back	A1–A4 A2–A3	Continuity

Reclining

Switch position	Tester connection to terminal number	Specified condition
Forward	A1–B1 A2–B2	Continuity
Off	A1–B1 A1–B2	Continuity
Back	A1–B2 A2–B1	Continuity

If continuity is not as specified, replace the switch.

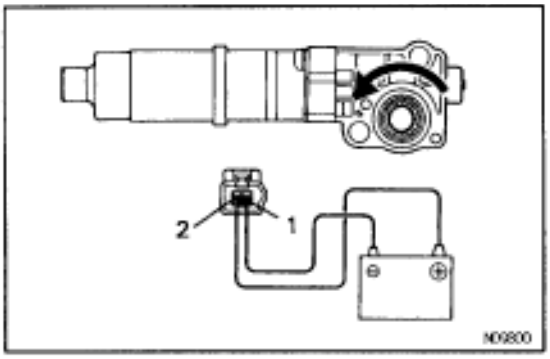

SLIDE MOTOR INSPECTION

1. INSPECT MOTOR OPERATION

(a) Connect the positive (+) lead from the battery to terminal 2 and the negative (–) lead to terminal 1, check that the motor turns counterclockwise.

(b) Reverse the polarity, check that the motor turns clockwise.
If operation is not as specified, replace the motor.

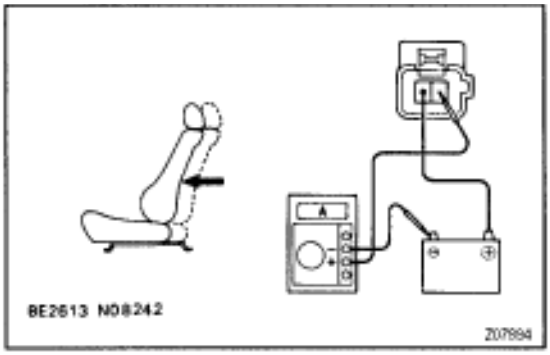

2. INSPECT PTC THERMISTOR OPERATION

(a) Separate power seat adjuster from front seat.

(b) Connect the positive (+) lead from the battery to terminal 2, the positive (+) lead from the ammeter to terminal 1, and the negative (–) lead to battery negative (–) terminal, and move the seat front end position.

(c) Continue to apply voltage, check the current changes to less than 1 ampere within 4 to 90 seconds.

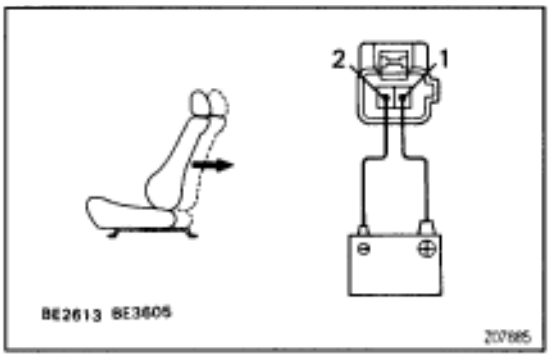

(d) Disconnect the lead from terminals.

(e) Approximately 60 seconds later, connect the positive (+) lead from battery to terminal 1 and the negative (–) lead to terminal 2, check that the seat begins to move backwards.
If operation is not as specified, replace the motor.

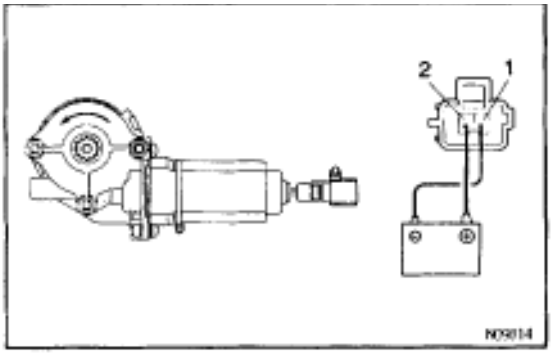

RECLINING MOTOR INSPECTION

1. INSPECT MOTOR OPERATION

(a) Connect the positive (+) lead from the battery to terminal 2 and negative (–) lead to terminal 1 and check that the motor turns counterclockwise.

(b) Reverse the polarity, check that the motor turns clockwise.
If operation is not as specified, replace the motor.

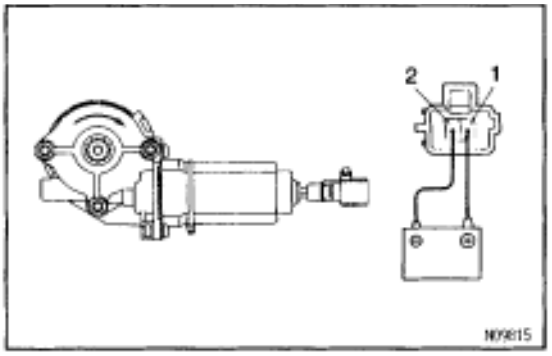

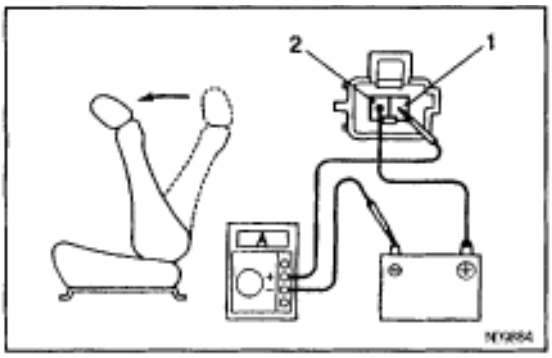

2. INSPECT PTC THERMISTOR OPERATION

(a) Connect the positive (+) lead from the battery to terminal 2.

(b) Connect the positive (+) lead from the ammeter to terminal 1 and the negative (–) lead to battery negative (–) terminal.

(c) Check that the seat back is reclined to the most forward position.

(d) Continue to apply voltage, check the current change to less than 1 ampere within 4 to 90 seconds.

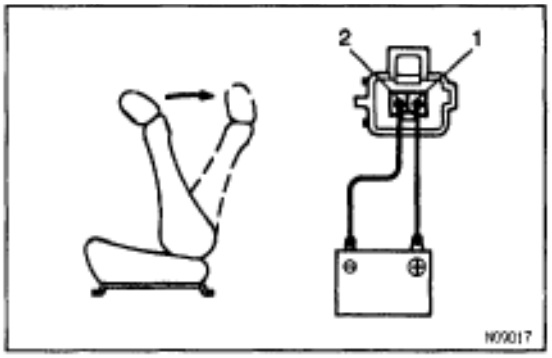

(e) Disconnect the lead from terminals.

(f) Approximately 60 seconds later, connect the positive (+) lead from the battery to terminal 1 and the negative (–) lead to terminal 2, check that the seat back starts to fall backwards.
If operation is not as specified, replace the motor.

POWER MIRROR CONTROL SYSTEM

PARTS LOCATION

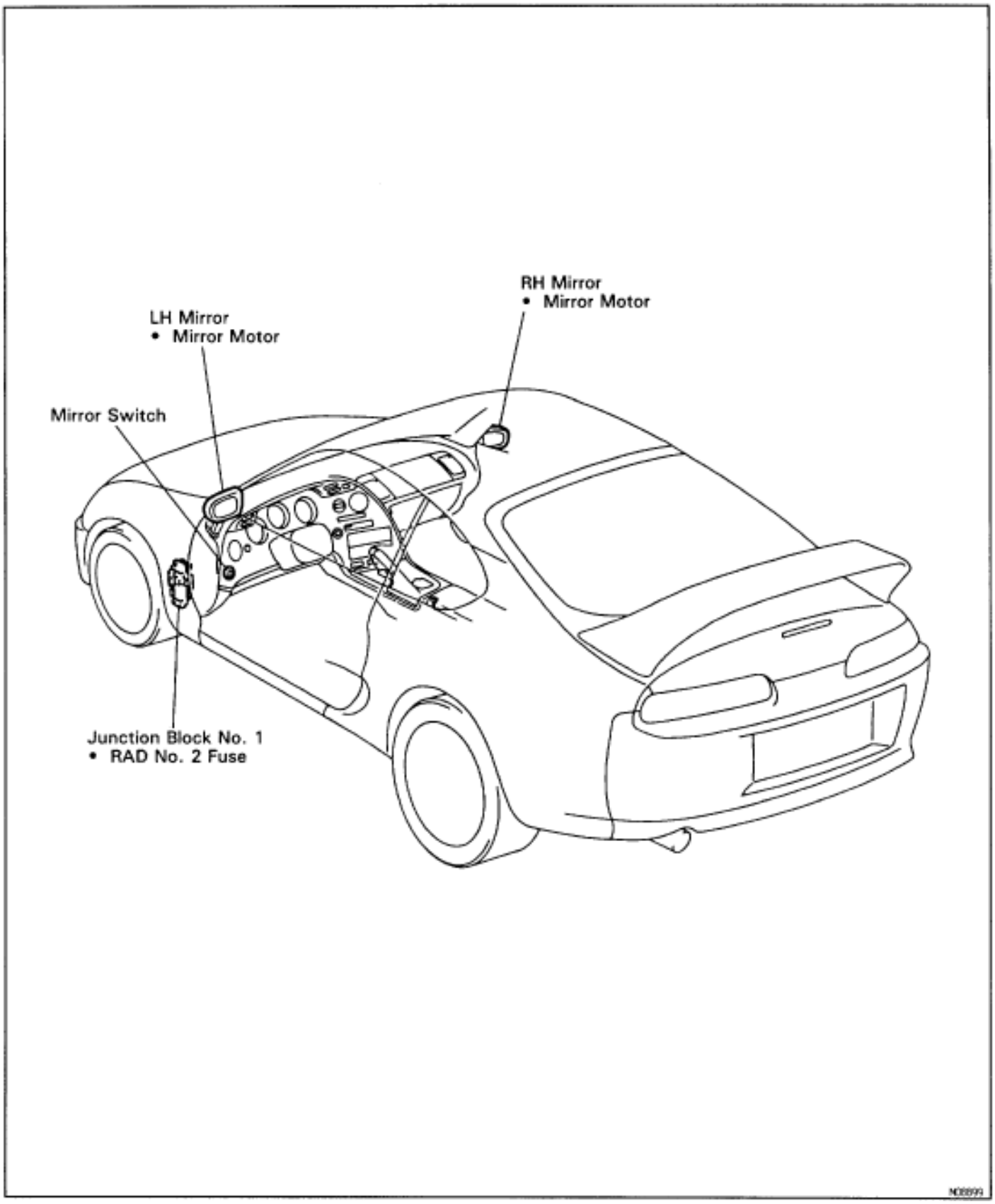

TROUBLESHOOTING

The table below will be useful for you in troubleshooting these electrical problems. The most likely causes of the malfunction are shown in the order of their probability. Inspect each part in the order shown, and replace the part when it is found to be faulty.

Trouble	Parts name	(See page)
Mirror does not operate	1. RAD No.2 Fuse 2. Mirror Switch 3. Mirror Motor 4. Wire Harness	(BE–6) (BE–79) (BE–80)
Mirror operates abnormally	1. Mirror Switch 2. Mirror Motor 3. Wire Harness	(BE–79) (BE–80)

MIRROR SWITCH INSPECTION

INSPECT SWITCH CONTINUITY

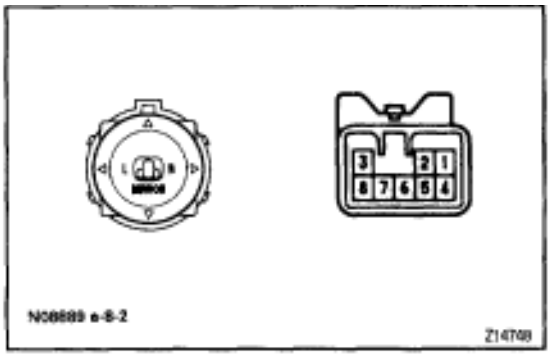

Left Side

Switch position	Tester connection to terminal number	Specified condition
OFF	–	No continuity
UP	2–5 6–8	Continuity
DOWN	2–6 5–8	Continuity
LEFT	1–8 2–5	Continuity
RIGHT	1–2 5–8	Continuity

Right Side

Switch position	Tester connection to terminal number	Specified condition
OFF	–	No continuity
UP	2–5 3–8	Continuity
DOWN	2–3 5–8	Continuity
LEFT	2–5 7–8	Continuity
RIGHT	2–7 5–8	Continuity

If continuity is not as specified, replace the switch.

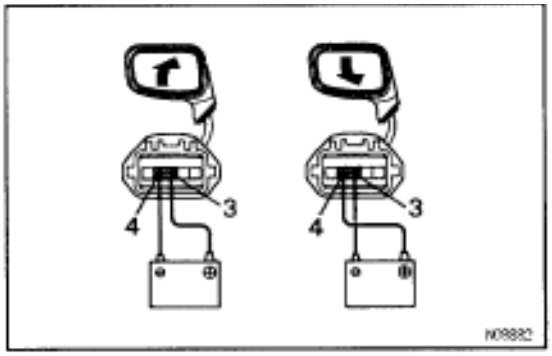

MIRROR MOTOR INSPECTION

INSPECT MOTOR OPERATION

(a) Connect the positive (+) lead from the battery to terminal 3 and negative (–) lead to terminal 4, check that the mirror turns upward.

(b) Reverse the polarity, check that the mirror turns to downward.

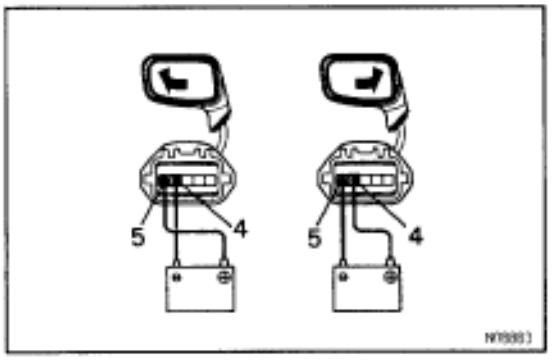

(c) Connect the positive (+) lead from the battery to terminal 5 and negative (–) lead to terminal 4, check that the mirror turns to left side.

(d) Reverse the polarity, check that the mirror turns to right side. If operation is not as specified, replace the mirror.

AUDIO SYSTEM
SYSTEM DESCRIPTION

1. RADIO WAVE BAND

The radio wave bands used in radio broadcasting are as follows:

Frequency	30 kHz	300kHz	3 MHz	30 MHz	300 MHz
Designation	LF	MF	HF	VHF	
Radio wave		AM ⟷		FM ⟷	
Modulation method	Amplitude modulation			Frequency modulation	

LF: low Frequency MF: Medium Frequency HF: High Frequency VHF: Very High Frequency

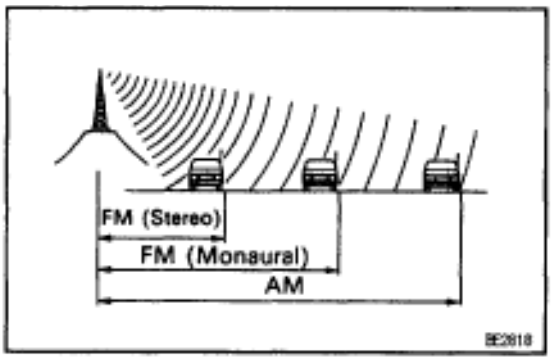

2. SERVICE AREA

There are great differences in the size of the service area for AM, FM monaural, and FM stereo broadcasts cannot be received even though AM comes in very clearly.

Not only does FM stereo have the smallest service area, but it also picks up static and other types of interference (”noise”) easily.

3. RECEPTION PROBLEMS

Besides the problem of static, there are also the problems called ”fading”, ”multipath” and ”fade out”. These problems are caused not by electrical noise but by the nature of the radio waves themselves.

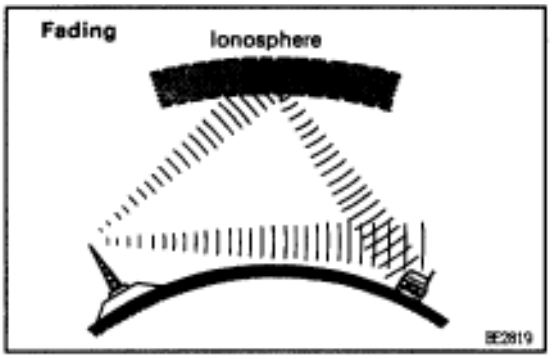

Fading

Besides electrical interference, AM broadcasts are also susceptible to other types of interference, especially at night. This is because AM radio waves bounce off the ionosphere at night. These radio waves then interfere with the signals from the same transmitter that reach the vehicle’s antenna directly. This type of interference is called ”fading”.

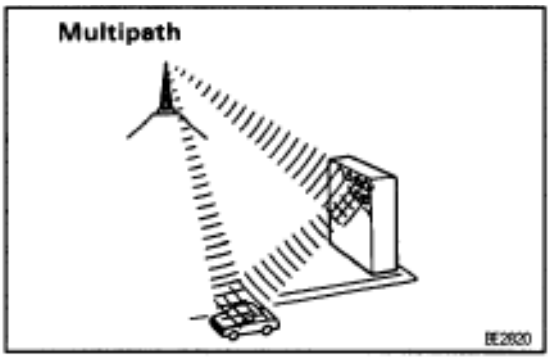

Multipath

One type of interference caused by the bouncing of radio waves off of obstructions is called ”multipath”. Multipath occurs when a signal from the broadcast transmitter antenna bounces off buildings and mountains and interferes with the signal that is received directly.

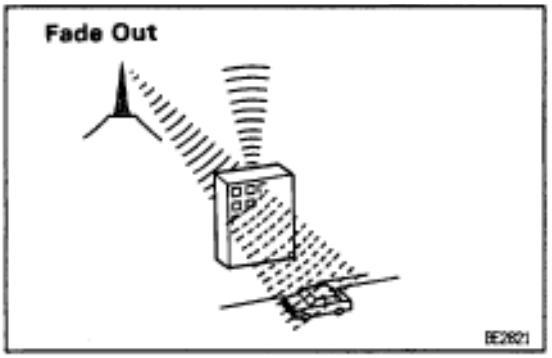

Fade Out

Because FM radio waves are of higher frequencies than AM radio waves, they bounce off buildings, mountains, and other obstructions. For this reason, FM signals often seem to gradually disappear or fade away as the vehicle goes behind a building or other obstruction. This is called ”fade out”.

4. COMPACT DISC PLAYER

Compact Disc (hereafter called ”CD”) Players use a laser beam pick–up to read the digital signals recorded on the CD and reproduce analog signals of the music, etc. There are 4.7 in. (12 cm) and 3.2 in. (8 cm) discs in the CD player.

HINT: Never attempt to disassemble or oil any part of the player unit. Do not insert any object other than a disc into the magazine.

NOTICE: CD players use an invisible laser beam which could cause hazardous radiation exposure. Be sure to operate the player correctly as instructed.

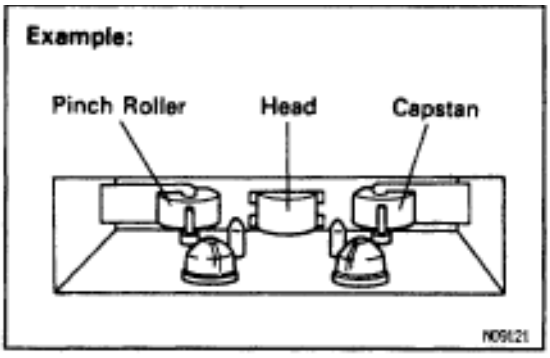

MAINTENANCE

Tape Player/Head Cleaning

(a) Raise the cassette door with your finger.
Next using a pencil or similar object, push in the guide.

(b) Using a cleaning pen or cotton applicator soaked in cleaner, clean the head surface, punch rollers and capstans.

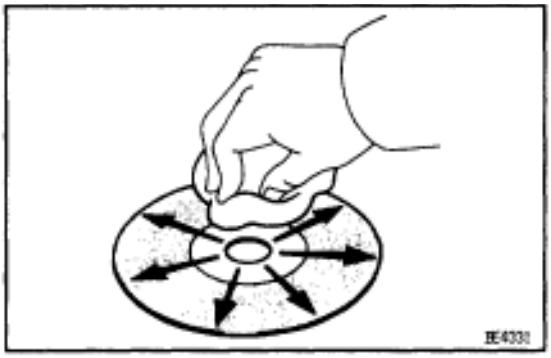

CD Player/Disc Cleaning

If the disc gets dirty, clean the disc by wiping the surfaces from the center to outside in the radial directions with a soft cloth.

NOTICE: Do not use a conventional record cleaner or anti –static preservative.

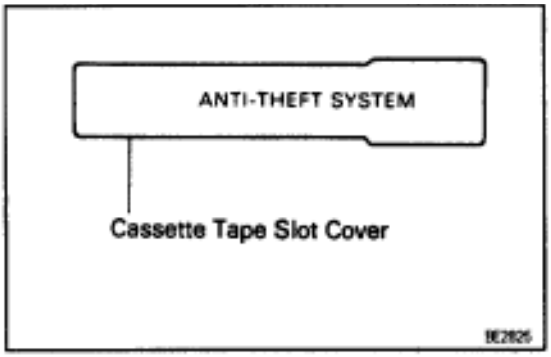

ANTI–THEFT SYSTEM

HINT: The words ”ANTI–THEFT SYSTEM” are displayed on the cassette tape slot cover.

For operation instructions for the anti–theft system, please consult the audio system section in the Owner’s Manual (hereafter called O/M).

1. SETTING SYSTEM

The system is in operation once the customer has pushed the required buttons and entered the customer–selected 3–digit ID number.

(Refer to the O/M section, ”Setting the anti–theft system”)

HINT:

- When the audio system is shipped the ID number has not been input, so the anti–theft system is not in operation.
- If the ID number has not been input, the audio system remains the same as a normal audio system.

2. ANTI–THEFT SYSTEM OPERATION

If the normal electrical power source (connector or battery terminal) is cut off, the audio system becomes inoperable, even if the power supply resumes.

3. CANCELING SYSTEM

The ID number chosen by the customer is input to cancel the anti–theft system.

(Refer to the O/M section, ”If the system is activated”)

HINT: To change or cancel the ID number, please refer to the O/M section ”Cancelling the system”.

PARTS LOCATION

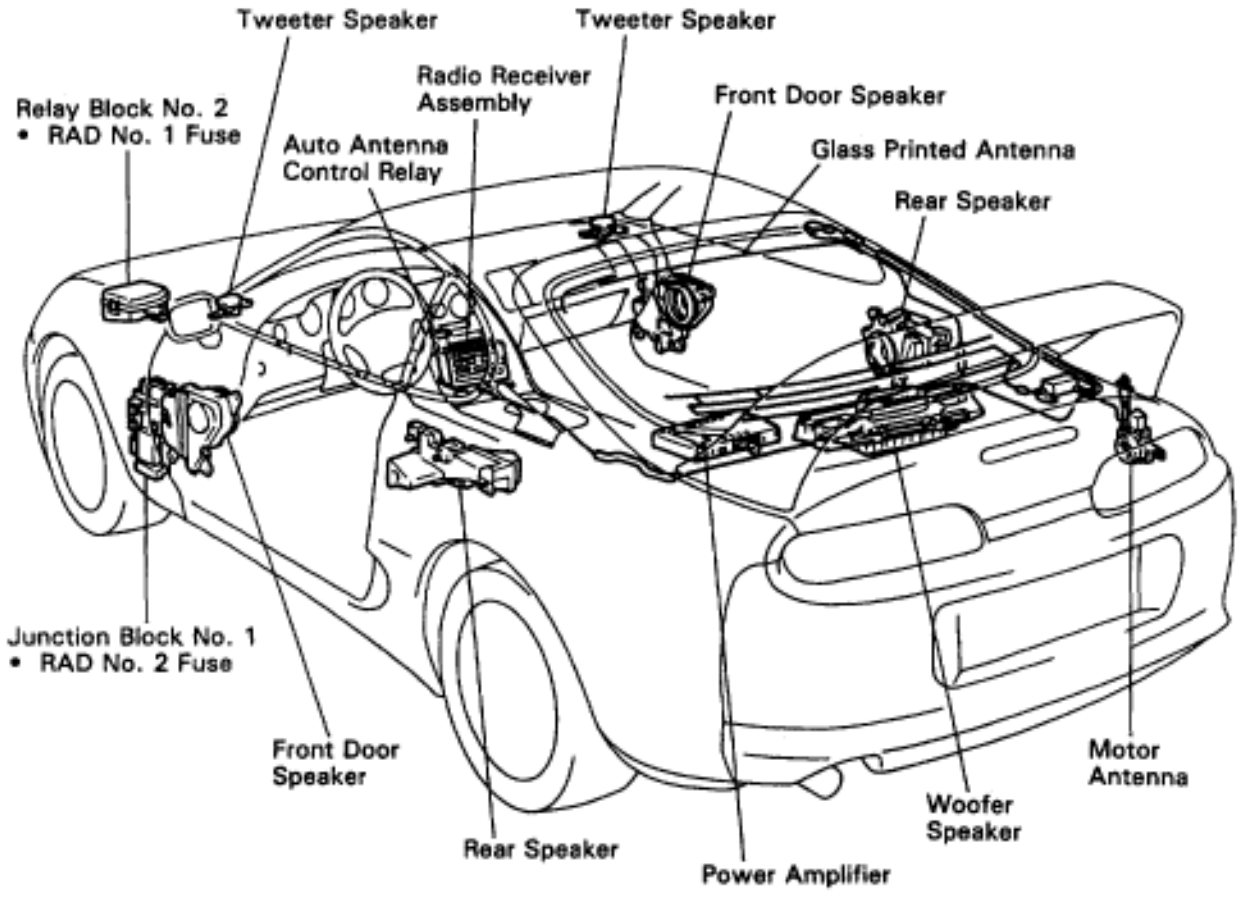

N08851

TROUBLESHOOTING

NOTICE: When replacing the internal mechanism (computer part) of the audio system, be careful that no part of your body or clothing comes in contact with the terminals of the leads from the IC, etc. of the replacement part (spare part).

HINT: This inspection procedure is a simple troubleshooting which should be carried out on the vehicle during system operation and is based on the assumption that the cause of trouble lies with the system components (except for the wires and connectors, etc.).

Always inspect the trouble taking the following items into consideration.

- Open or short circuit of the wire harness
- Connector or terminal connection fault
- Troubleshooting items marked *indicate that ”Troubleshooting for ANTI–THEFT SYSTEM” should be carried out first.

Problem		No.
Radio	No power coming in.	*1
	Power coming in, but radio not operating.	2
	Noise present, but AM–FM not operating.	3
	Either speaker does not work.	4
	Woofer speaker does not work.	5
	Either AM or FM does not work.	6
	Reception poor (Volume faint).	6
	Few preset tuning bands.	6
	Sound quality poor.	7
	Cannot set station select button.	8
	Preset memory disappears.	8
Tape player	Cassette tape cannot be inserted.	9
	Cassette tape inserts, but no power.	*10
	Power coming in, but tape player not operating.	11
	Either speaker does not work.	12
	Woofer speaker does not work.	13
	Sound quality poor (Volume faint).	14
	Tape jammed, malfunction with tape speed or auto–reverse.	15
	APS, SKIP, RPT buttons not operating.	16
	Cassette tape will not eject.	*17
CD player	CD cannot be inserted.	18
	CD inserts, but no power.	19
	Power coming in, but CD player not operating.	20
	Sound jumps.	21
	Sound quality poor (Volume faint).	22
	Either speaker does not work.	23
	Woofer speaker does not work.	24
	CD will not eject.	25
Amplifier	No power coming in.	26
	Power coming in, but woofer amplifier (Power amplifier) not operating.	27
	Either speaker does not work.	28
	Woofer speaker does not work.	29

Problem		No.
Noise	Noise produced by vibration or shock while driving.	30
	Noise produced when engine starts.	31
Antenna	Antenna–related.	32
ANTI–THEFT SYSTEM	Troubleshooting for ANTI–THEFT SYSTEM	33

HOW TO USE DIAGNOSTIC CHART

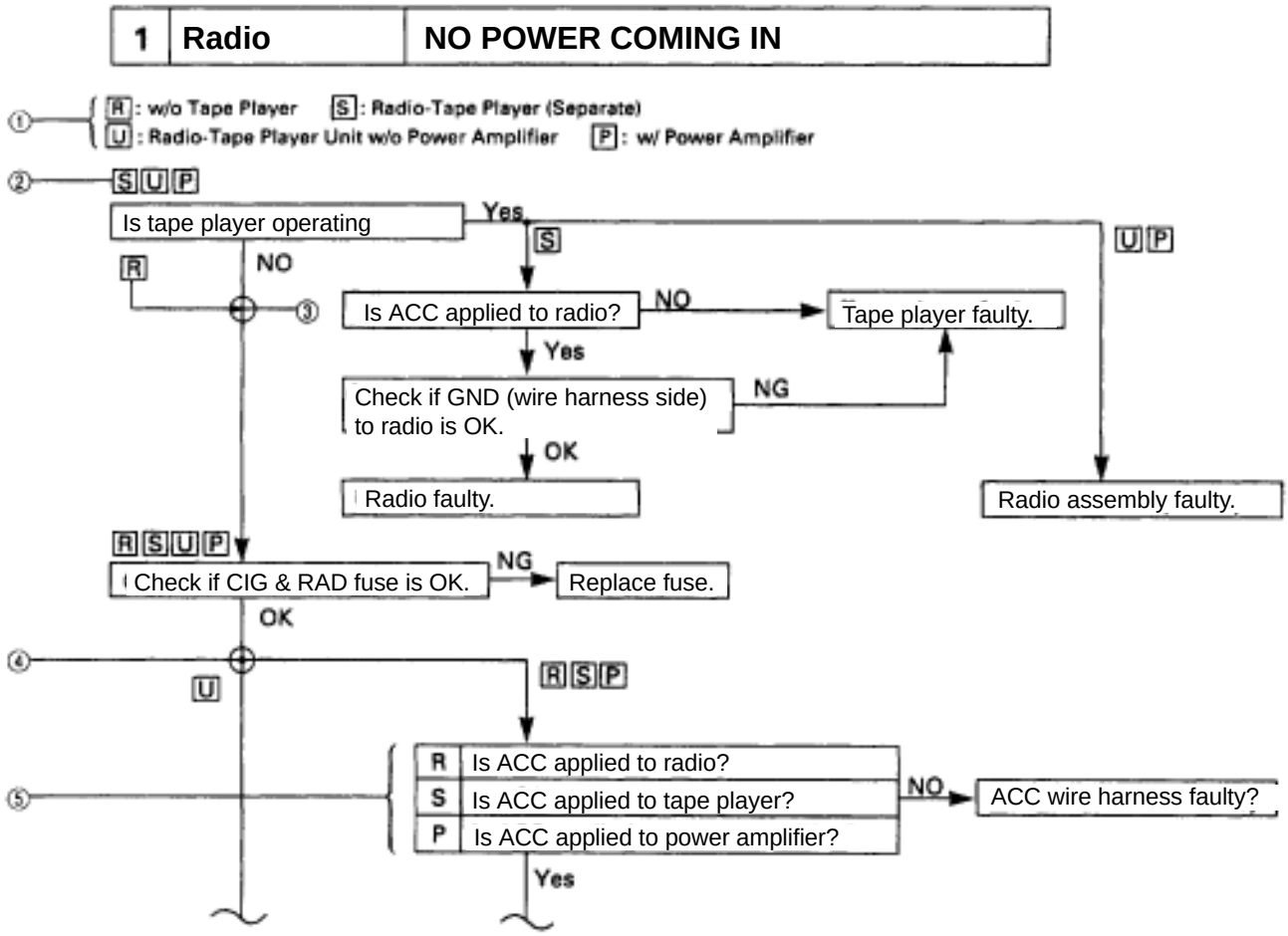

(1) Audio system type and symbol used.
HINT: Confirm the applicable type of audio system.

(2) Symbol for type of audio system the question applies to.
HINT: If the audio system type is not applicable, proceed to next question below.

(3) Junction without black circle.
HINT: Proceed to next question below.

(4) Junction with black circle.
HINT: Proceed to question for applicable audio system type.

(5) HINT: Select question for applicable audio system type.

1 Radio NO POWER COMING IN

W : w/ Power Amplifier
WO : w/o Power Amplifier

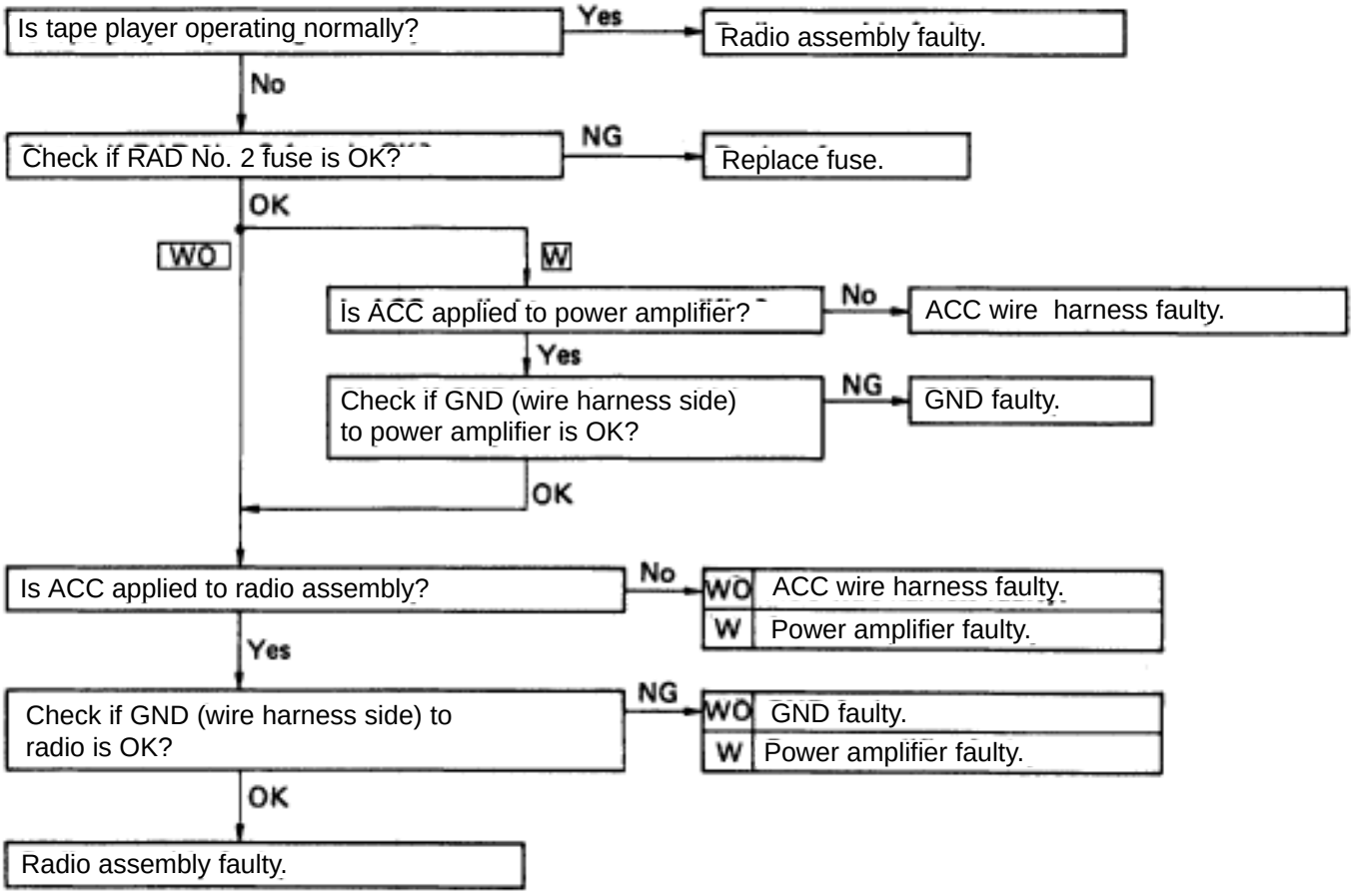

2 Radio POWER COMING IN, BUT RADIO NOT OPERATING

W : w/ Power Amplifier
WO : w/o Power Amplifier

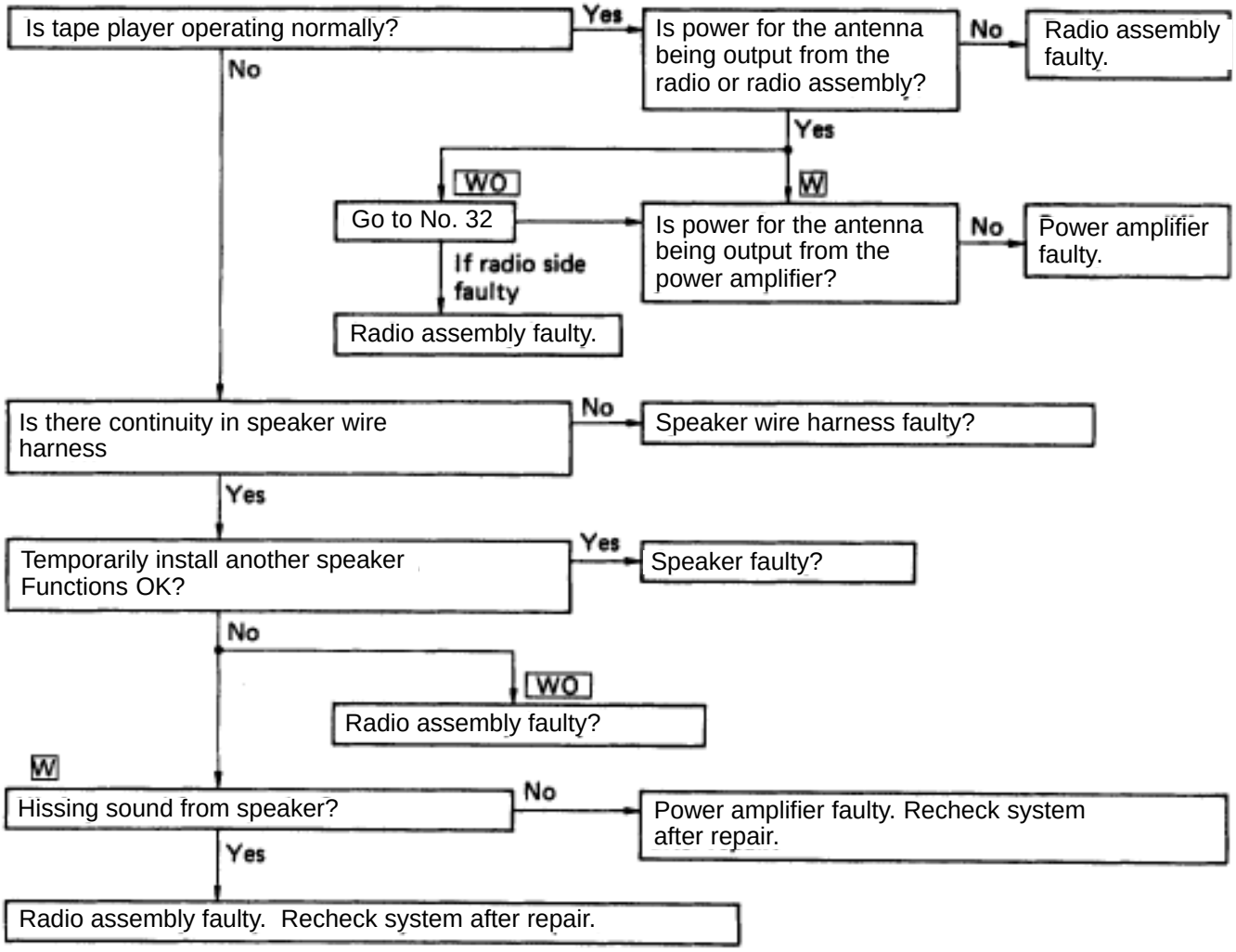

3 Radio NOISE PRESENT BUT AM–FM NOT OPERATING

W : w/ Power Amplifier
WO : w/o Power Amplifier

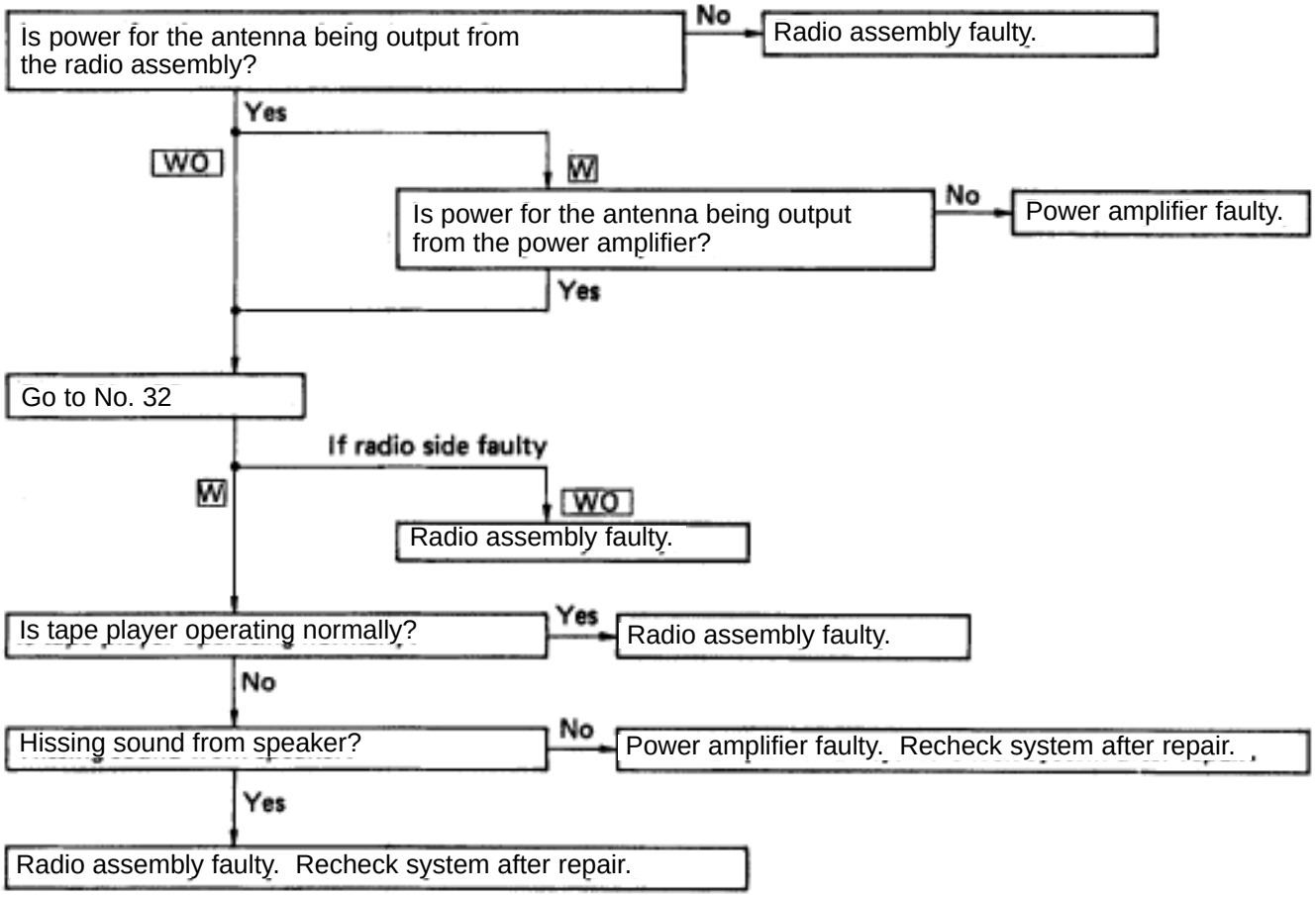

4	Radio	EITHER SPEAKER DOES NOT WORK

W : w/ Power Amplifier
WO : w/o Power Amplifier

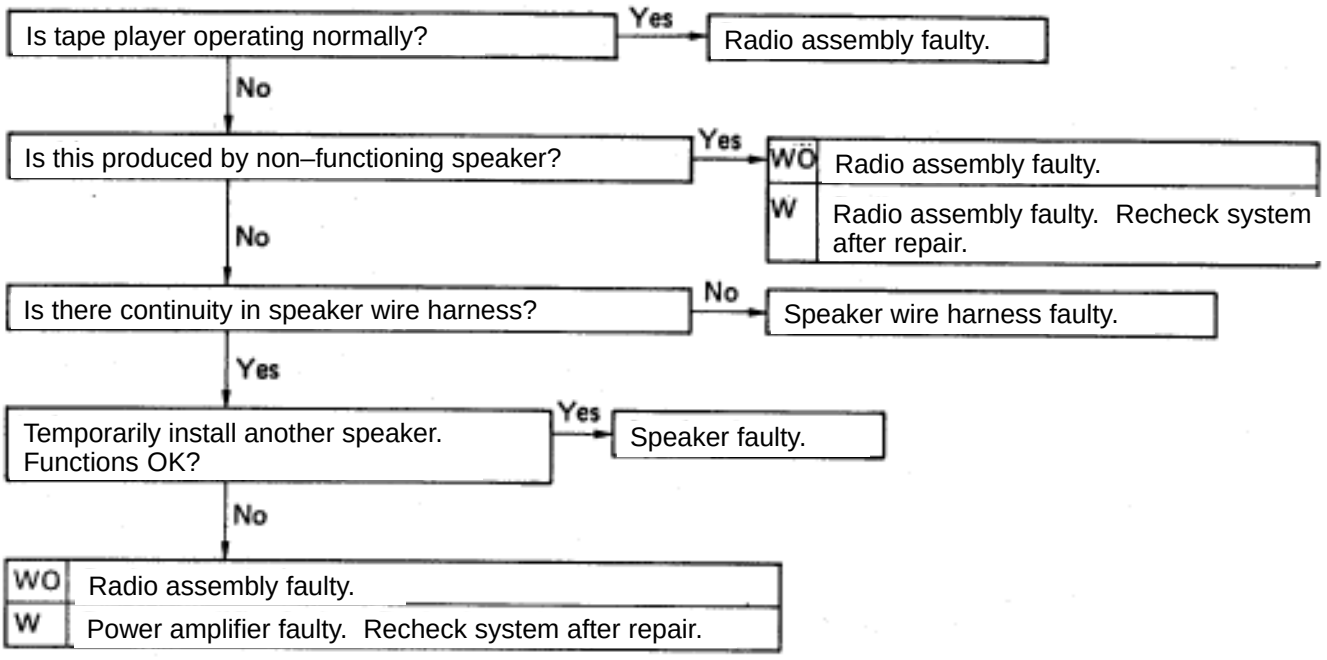

5	Radio	WOOFER SPEAKER DOES NOT WORK

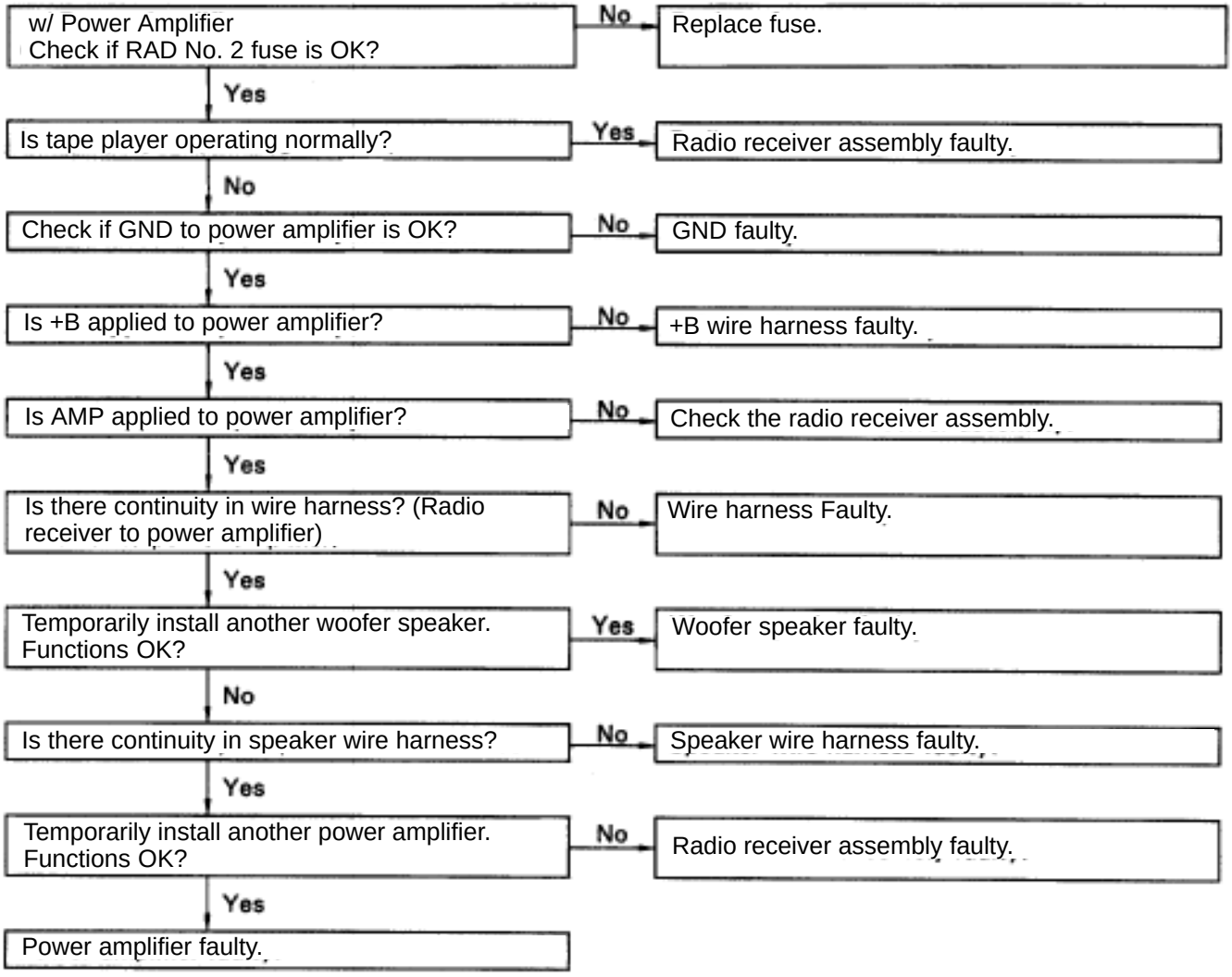

6	Radio	EITHER AM OR FM DOES NOT WORK, RECEPTION POOR (VOLUME FAINT), FEW PRESET TUNING BANDS

W : w/ Power Amplifier
WO : w/o Power Amplifier

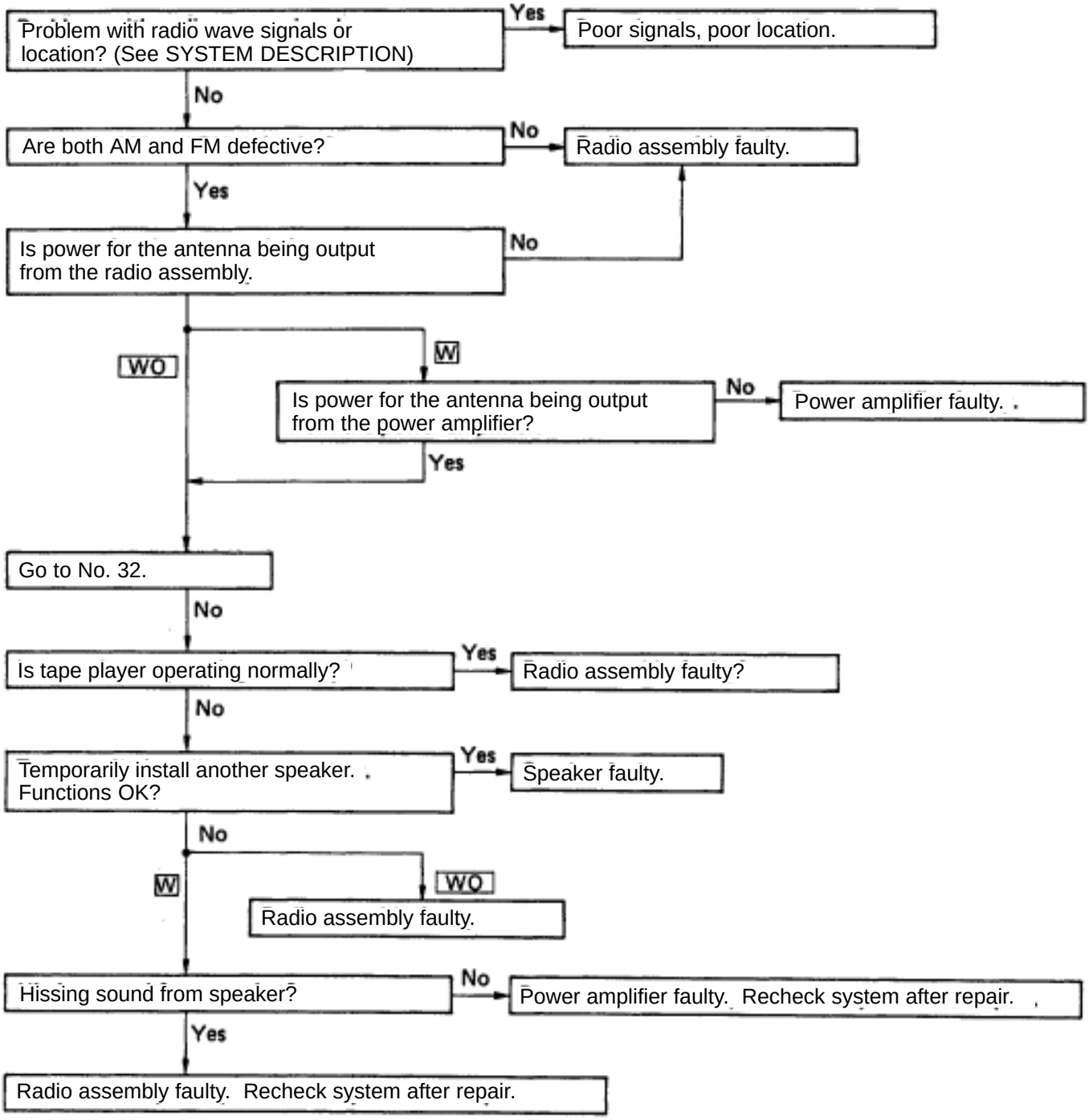

7	Radio	SOUND QUALITY POOR

[W] : w/ Power Amplifier
[WO] : w/o Power Amplifier

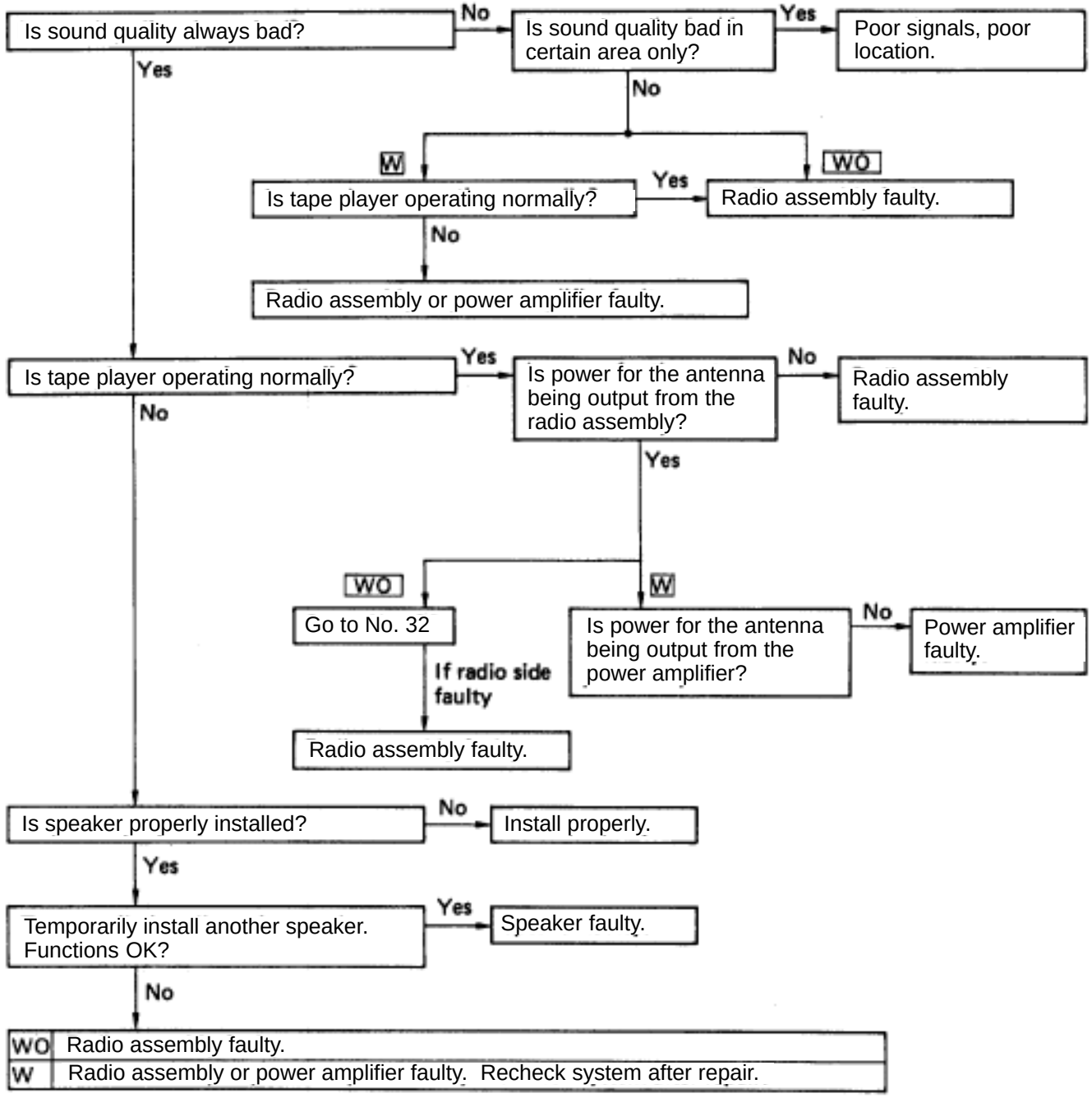

WO	Radio assembly faulty.
W	Radio assembly or power amplifier faulty. Recheck system after repair.

8	Radio	CANNOT SET STATION SELECT BUTTON, PRESET MEMORY DISAPPEARS

W : w/ Power Amplifier
WO : w/o Power Amplifier

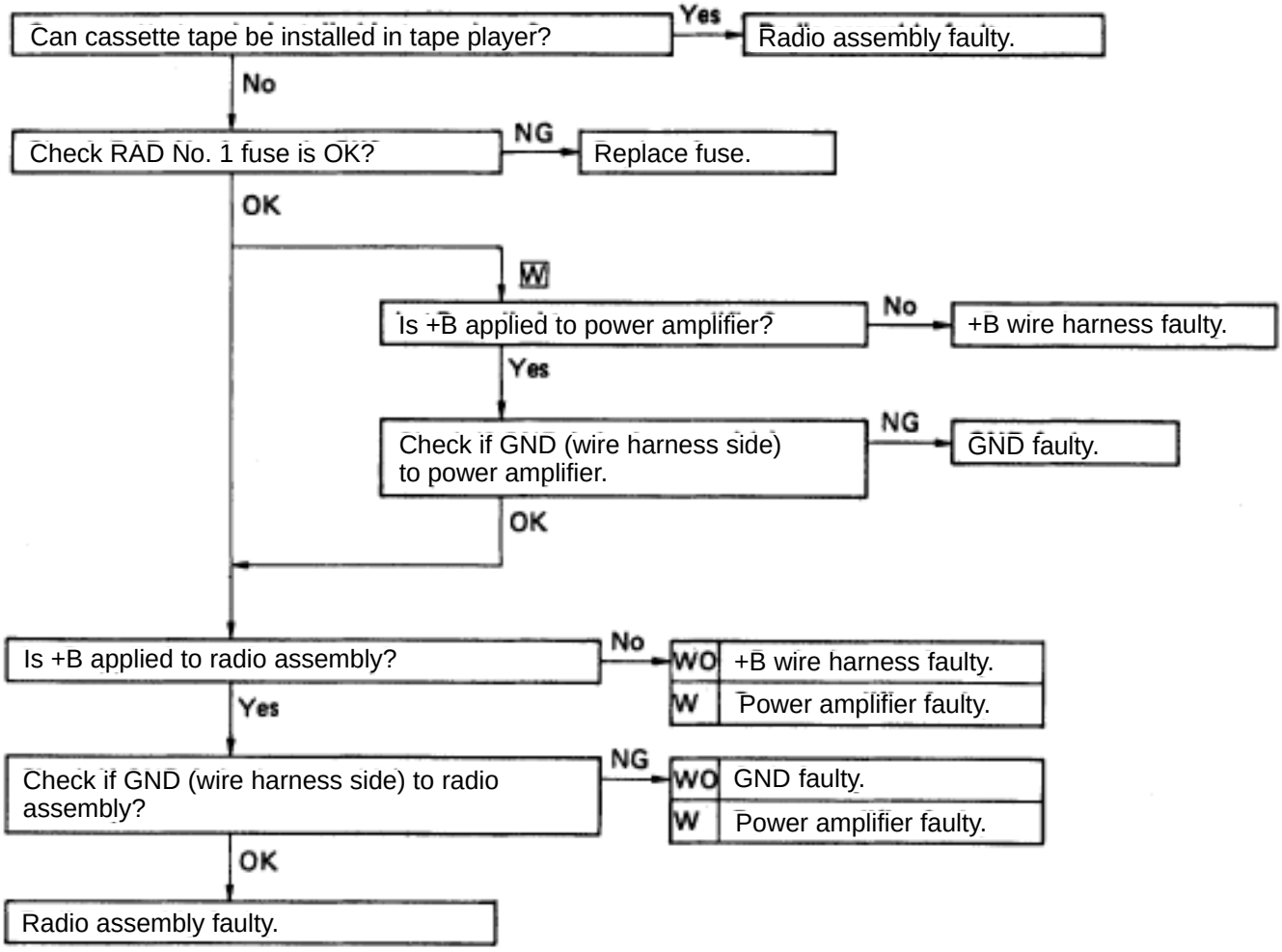

9 Tape Player CASSETTE TAPE CANNOT BE INSERTED

W : w/ Power Amplifier
WO : w/o Power Amplifier

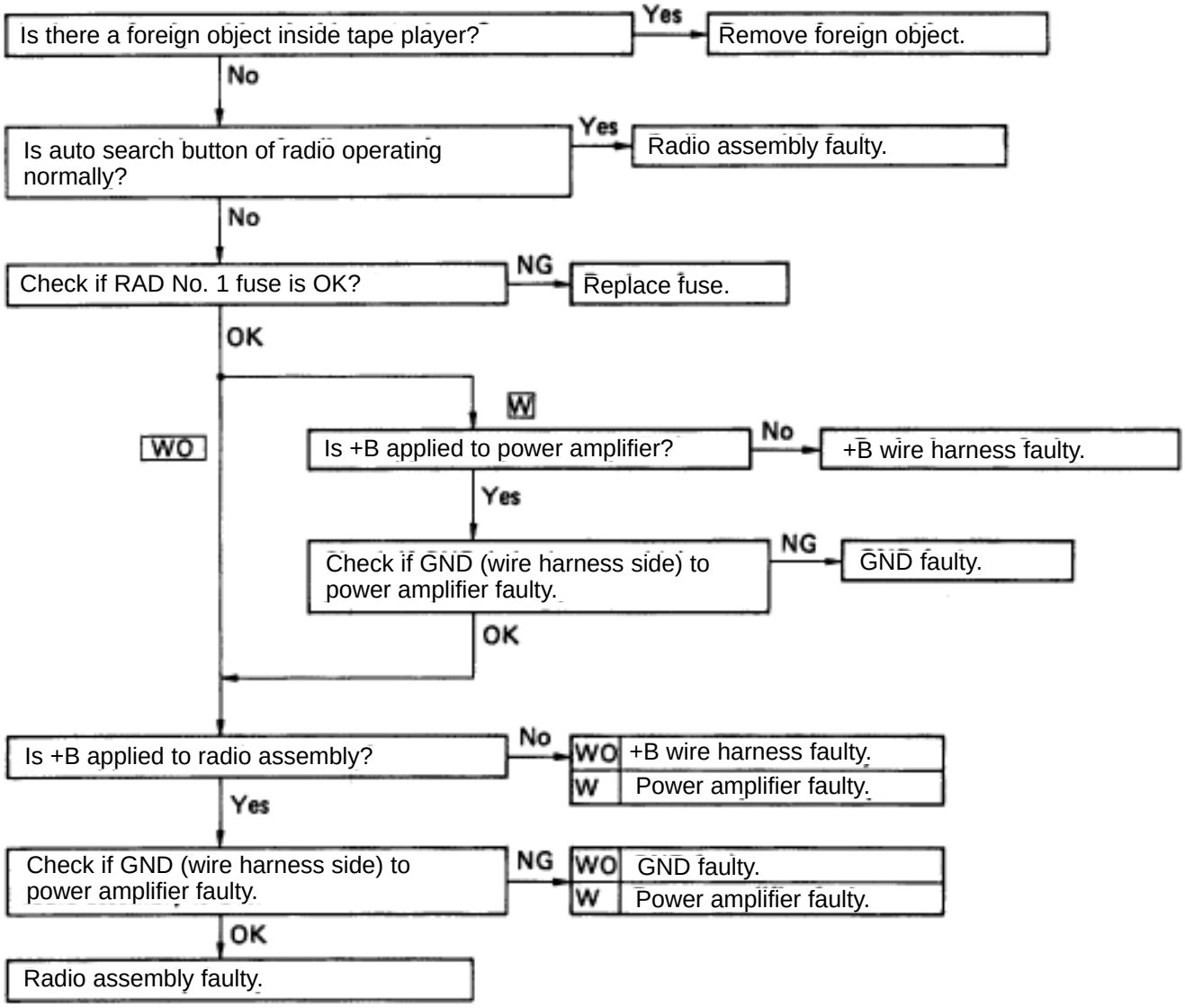

10 Tape Player — CASSETTE TAPE INSERTS, BUT NO POWER

W : w/ Power Amplifier
WO : w/o Power Amplifier

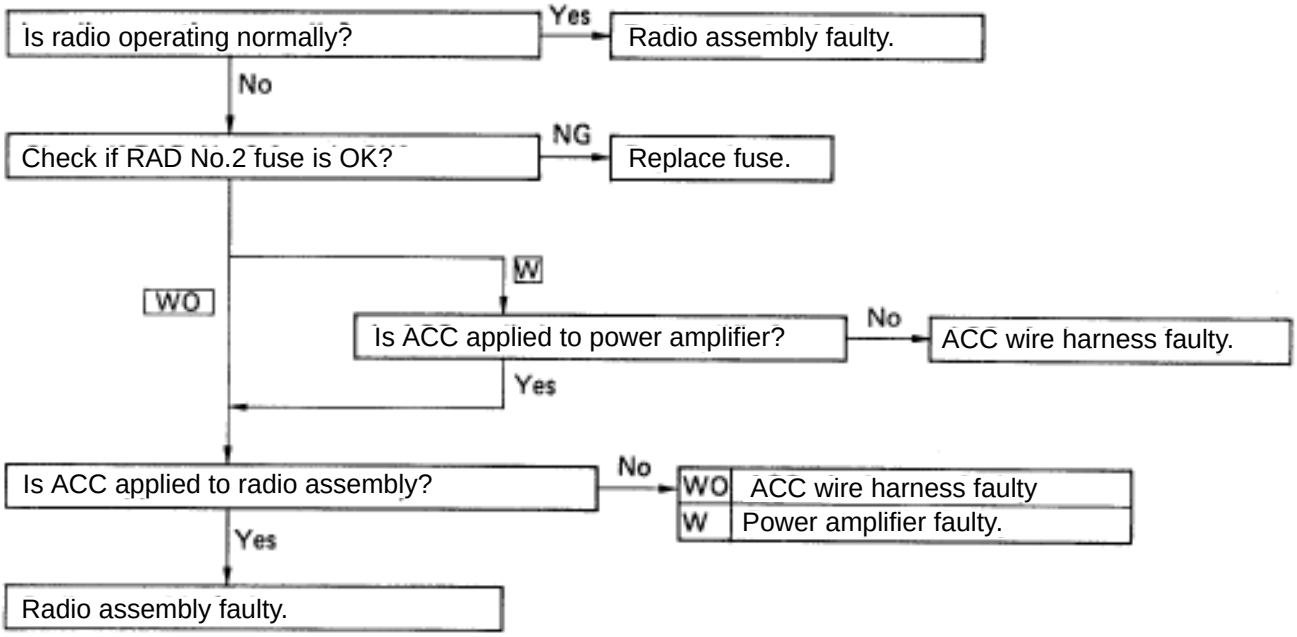

11 Tape Player — POWER COMING IN, BUT TAPE PLAYER NOT OPERATING

W : w/ Power Amplifier
WO : w/o Power Amplifier

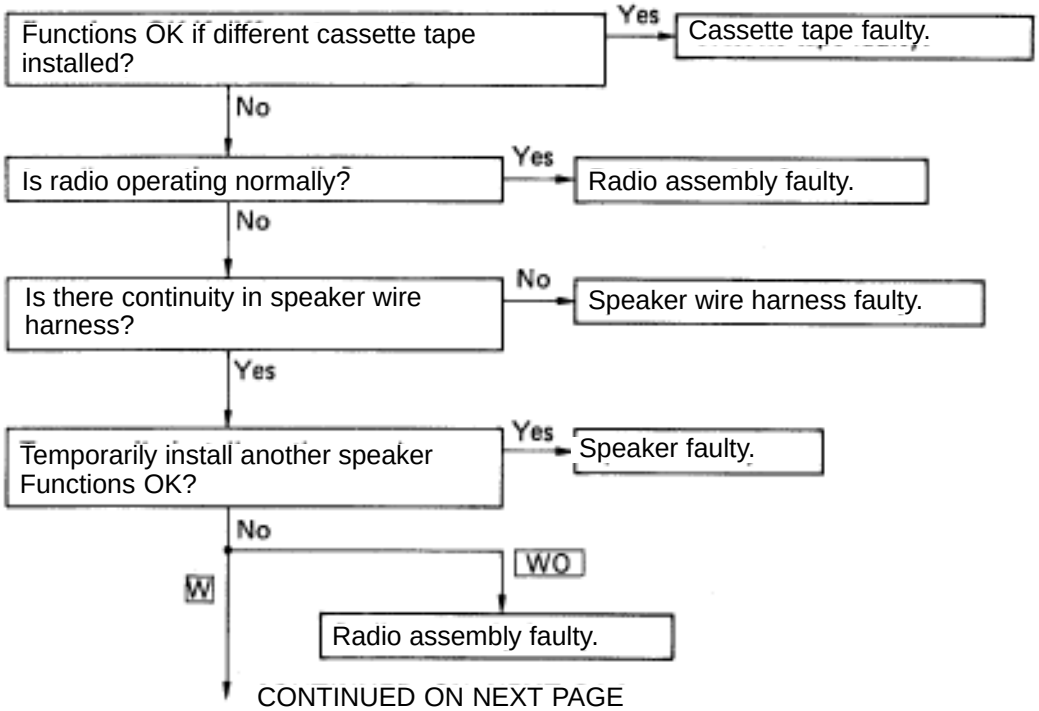

CONTINUED ON NEXT PAGE

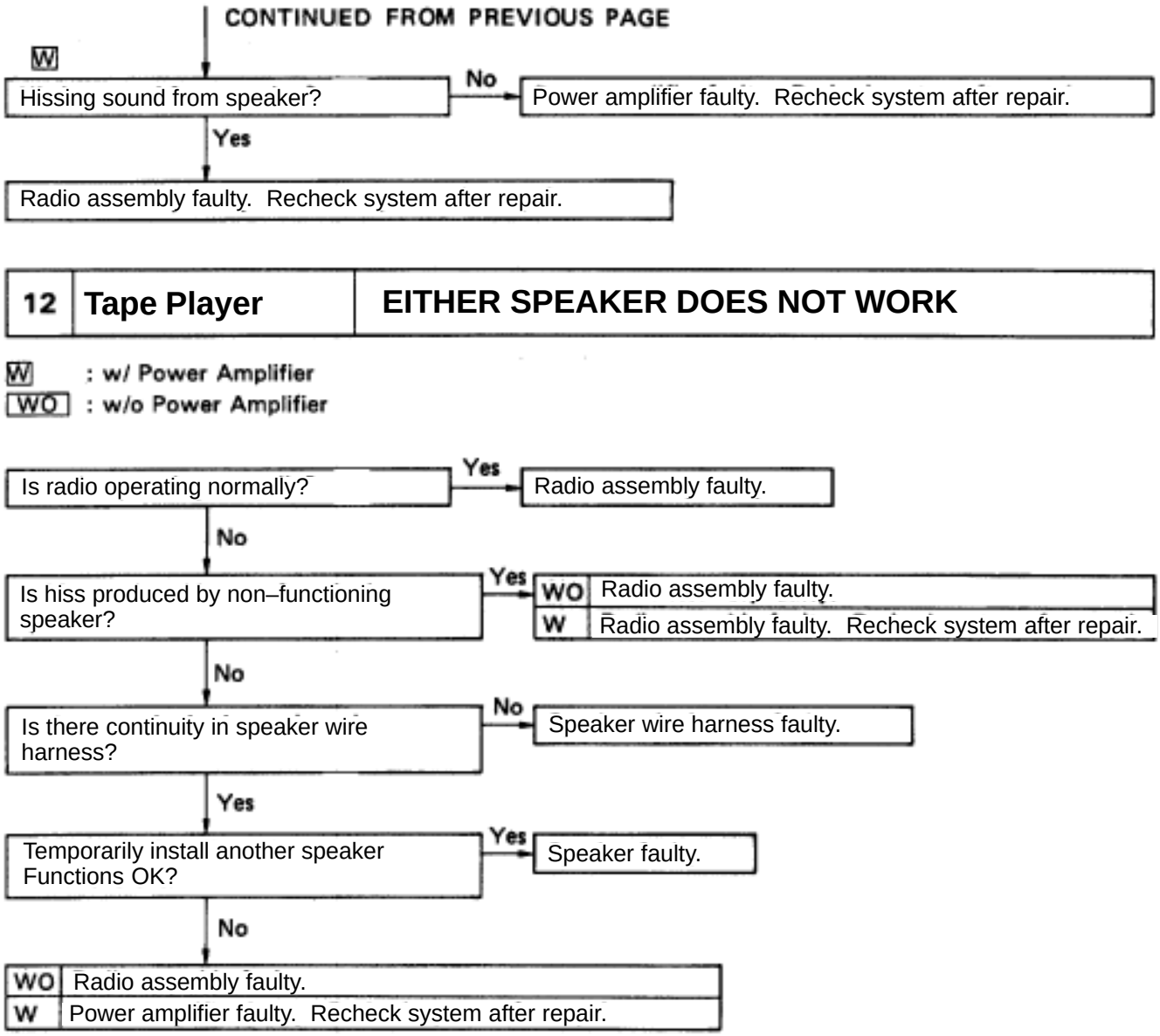
CONTINUED FROM PREVIOUS PAGE
W
Hissing sound from speaker?
No
Power amplifier faulty. Recheck system after repair.
Yes
Radio assembly faulty. Recheck system after repair.
12
Tape Player
EITHER SPEAKER DOES NOT WORK
W : w/ Power Amplifier
WO : w/o Power Amplifier
Is radio operating normally?
Yes
Radio assembly faulty.
No
Is hiss produced by non–functioning speaker?
Yes
WO Radio assembly faulty.
W Radio assembly faulty. Recheck system after repair.
No
Is there continuity in speaker wire harness?
No
Speaker wire harness faulty.
Yes
Temporarily install another speaker Functions OK?
Yes
Speaker faulty.
No
WO Radio assembly faulty.
W Power amplifier faulty. Recheck system after repair.

13 Tape Player — WOOFER SPEAKER DOES NOT WORK

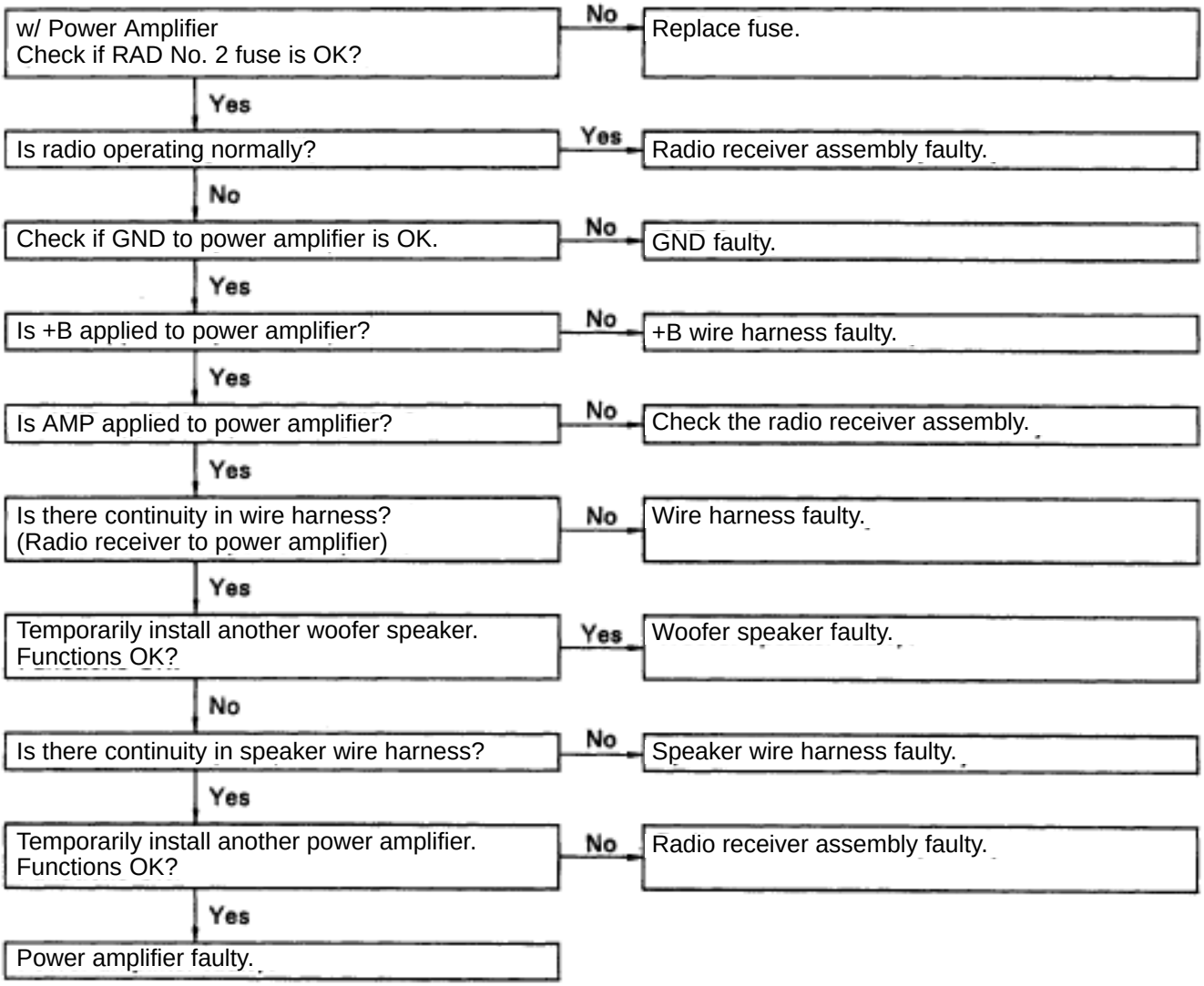

14 Tape Player — SOUND QUALITY POOR (VOLUME FAINT)

W : w/ Power Amplifier
WO : w/o Power Amplifier

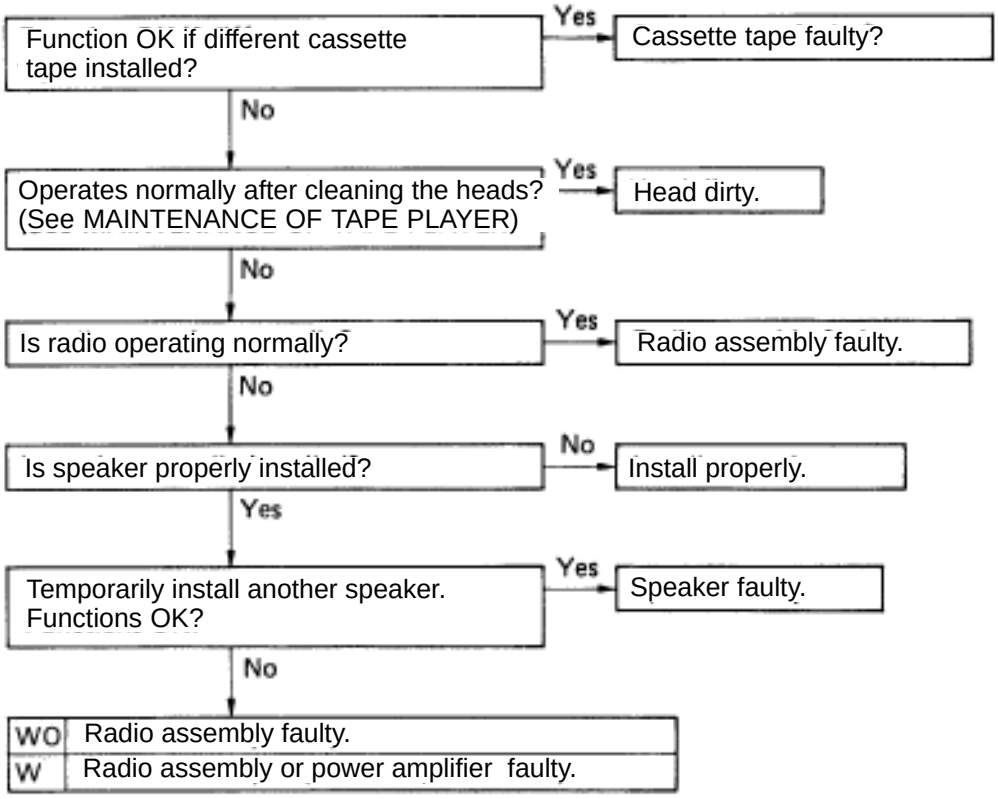

15 Tape Player — TAPE JAMMED, MALFUNCTION WITH TAPE SPEED OR AUTO REVERSE

W : w/ Power Amplifier
WO : w/o Power Amplifier

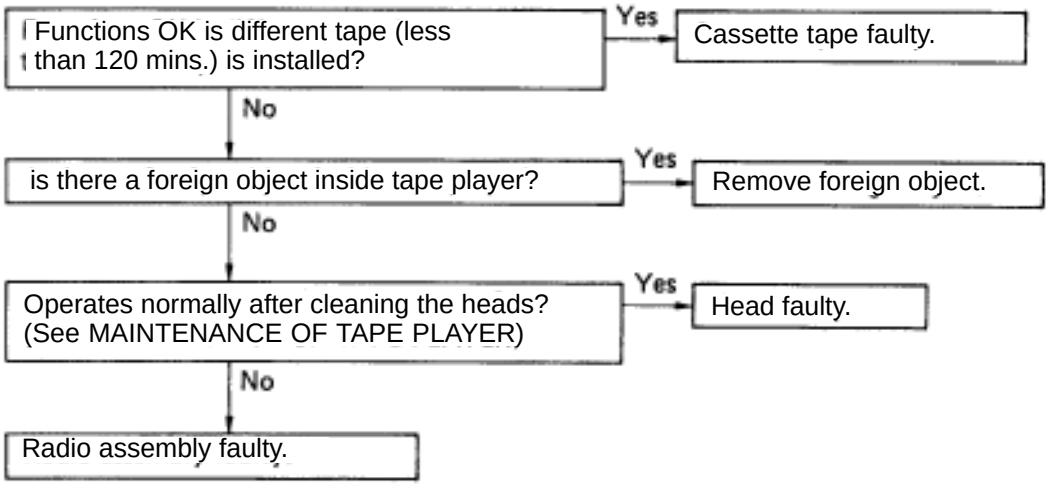

16 Tape Player — APS, SKIP, RPT BUTTONS NOT OPERATING

Functions OK if different cassette tape installed?
- No → Radio assembly faulty.
- Yes → Cassette tape faulty. (Less than 3 secs. of silence between songs (APS, RPT), Less than 15 secs. of silence (SKIP).)

17 Tape Player — CASSETTE TAPE WILL NOT EJECT

W : w/ Power Amplifier
WO : w/o Power Amplifier

Is tape player operating normally?
- No → Cassette tape jammed.
- Yes → Is auto search button of radio operating normally?
  - Yes → Radio assembly faulty.
  - No → Check if RAD No.1 fuse is OK?
    - NG → Replace fuse.
    - OK → (W) Is +B applied to power amplifier?
      - No → +B wire harness faulty.
      - Yes → Is +B applied to radio assembly?
        - No → WO: +B wire harness faulty; W: Power amplifier faulty.
        - Yes → Radio assembly faulty.

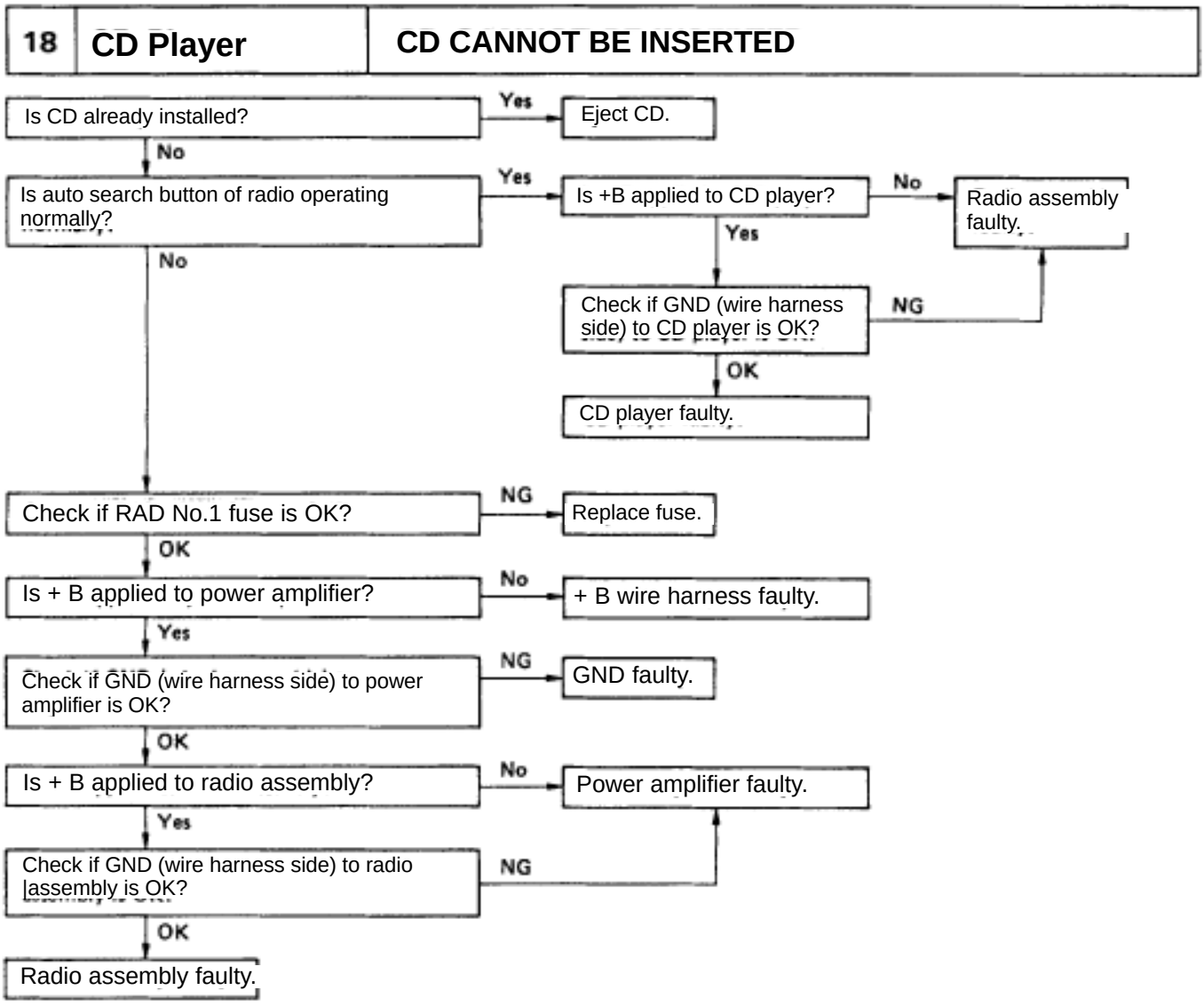
18
CD Player
CD CANNOT BE INSERTED
Is CD already installed?
Yes
Eject CD.
No
Is auto search button of radio operating normally?
Yes
Is +B applied to CD player?
No
Radio assembly faulty.
Yes
No
Check if GND (wire harness side) to CD player is OK?
NG
OK
CD player faulty.
Check if RAD No.1 fuse is OK?
NG
Replace fuse.
OK
Is + B applied to power amplifier?
No
+ B wire harness faulty.
Yes
Check if GND (wire harness side) to power amplifier is OK?
NG
GND faulty.
OK
Is + B applied to radio assembly?
No
Power amplifier faulty.
Yes
Check if GND (wire harness side) to radio assembly is OK?
NG
OK
Radio assembly faulty.

19 CD Player — CD INSERTS, BUT NO POWER

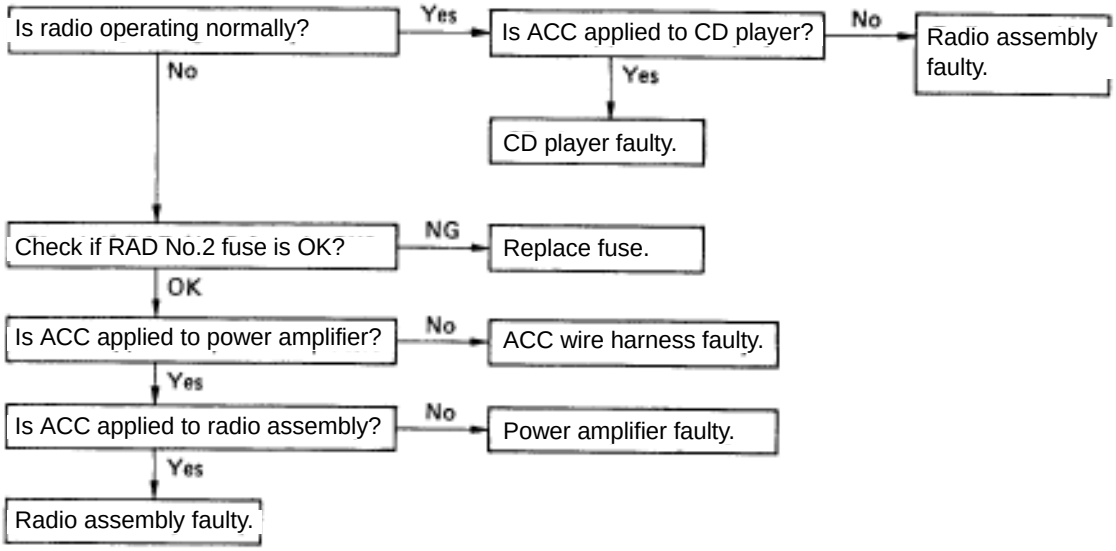

20 CD Player — POWER COMING IN, BUT CD PLAYER NOT OPERATING

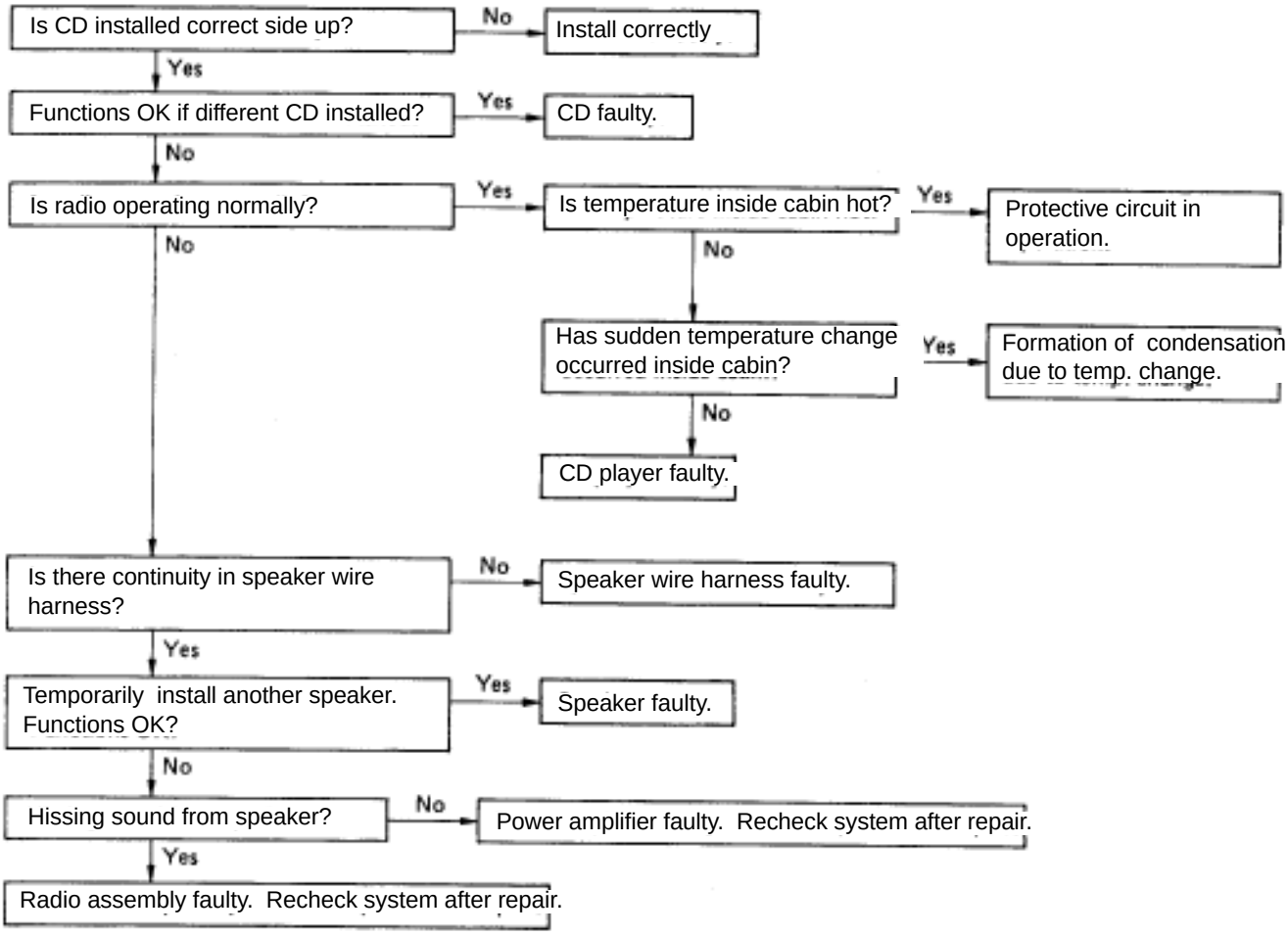

21 CD Player — SOUND JUMPS

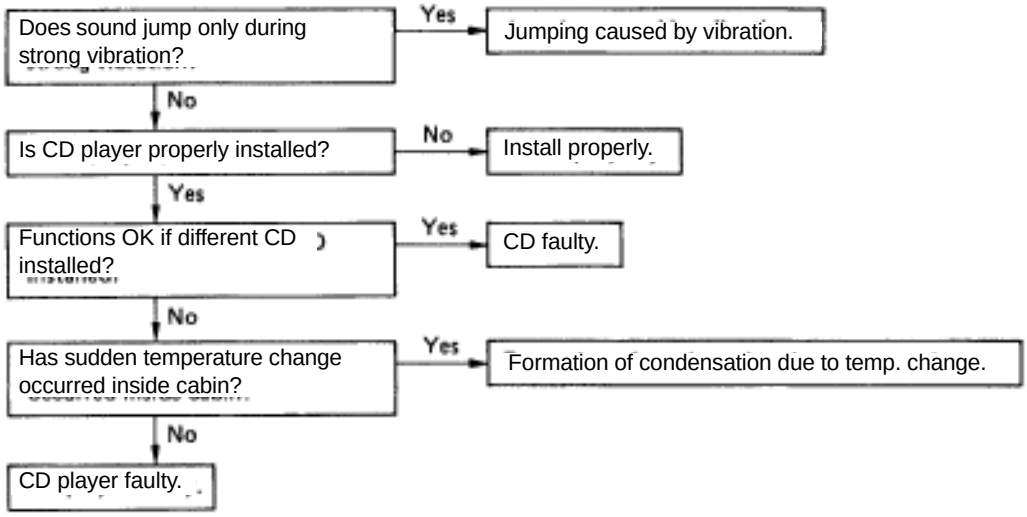

22 CD Player — SOUND QUALITY POOR (VOLUME FAINT)

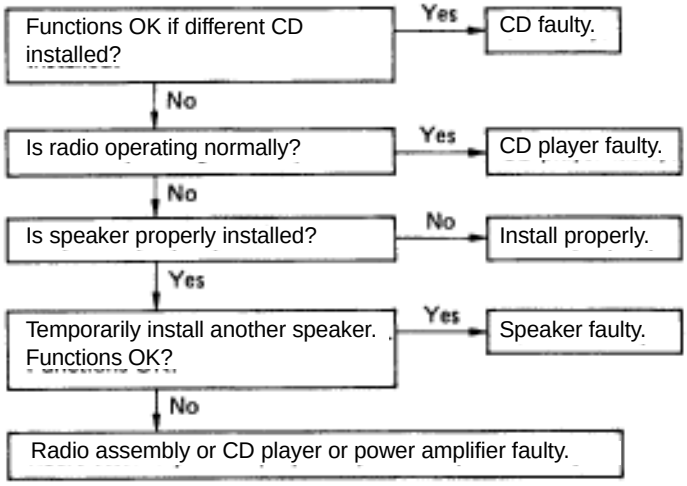

23 CD Player — EITHER SPEAKER DOES NOT WORK

- Is radio operating normally?
  - Yes → CD player faulty.
  - No ↓
- Is hiss produced by non–functioning speaker?
  - Yes → Radio assembly faulty. Recheck system after repair.
  - No ↓
- Is there continuity in speaker wire harness?
  - No → Speaker wire harness faulty.
  - Yes ↓
- Temporarily install another speaker. Functions OK.
  - Yes → Speaker faulty.
  - No ↓
- Power amplifier faulty. Recheck system after repair.

24 CD Player — WOOFER SPEAKER DOES NOT WORK

- Check if RAD No. 1 fuse is OK?
  - No → Replace fuse
  - Yes ↓
- Is radio operating normally?
  - Yes → Radio receiver assembly faulty.
  - No ↓
- Check if GND to power amplifier is OK?
  - No → GND faulty.
  - Yes ↓
- Is +B applied to power amplifier
  - No → +B wire harness faulty.
  - Yes ↓
- Is AMP applied to power amplifier?
  - No → Check the radio receiver assembly.
  - Yes ↓
- Is there continuity in wire harness? (Radio receiver to power amplifier)
  - No → Wire harness faulty.
  - Yes ↓
- Temporarily install another woofer speaker. Functions OK?
  - Yes → Woofer speaker faulty.
  - No ↓
- Is there continuity in speaker wire harness?
  - No → Speaker wire harness faulty.
  - Yes ↓
- Temporarily install another power amplifier. Functions OK?
  - No → Radio receiver assembly faulty.
  - Yes ↓
- Power amplifier faulty.

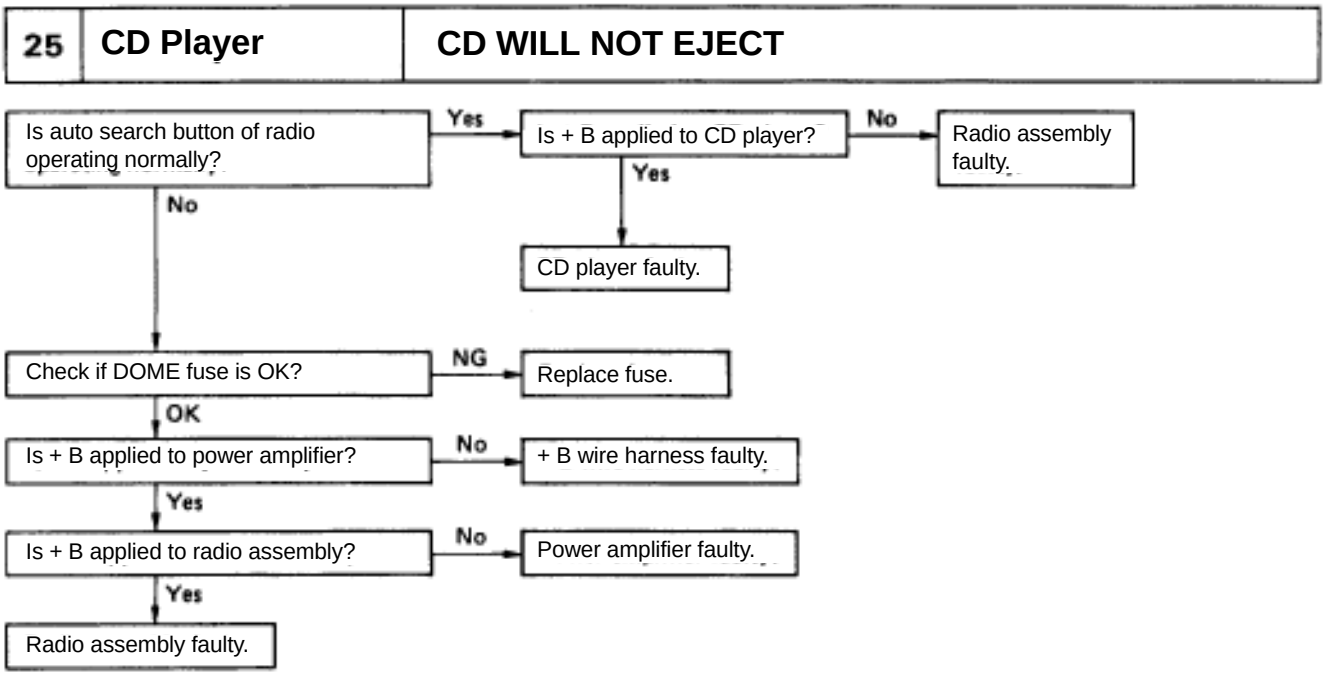
25
CD Player
CD WILL NOT EJECT
Is auto search button of radio operating normally?
Yes
Is + B applied to CD player?
No
Radio assembly faulty.
Yes
CD player faulty.
No
Check if DOME fuse is OK?
NG
Replace fuse.
OK
Is + B applied to power amplifier?
No
+ B wire harness faulty.
Yes
Is + B applied to radio assembly?
No
Power amplifier faulty.
Yes
Radio assembly faulty.

26 Amplifier — NO POWER COMING IN

- Is + B applied to power amplifier?
  - No → Power amplifier faulty.
  - Yes ↓
- Is ACC applied to power amplifier?
  - No → Power amplifier.
  - Yes ↓
- Is there continuity in wire harness? (Radio receiver to power amplifier)
  - No → Wire harness faulty.
  - Yes ↓
- Check if GND to body is OK.
  - No → GND faulty.
  - Yes ↓
- Radio receiver assembly faulty.

27 Amplifier — POWER COMING IN, BUT POWER AMPLIFIER NOT OPERATING

- Is power amplifier operating normally?
  - No → Power amplifier faulty.
  - Yes ↓
- Is there continuity in speaker wire harness?
  - No → Speaker wire harness faulty.
  - Yes ↓
- Temporarily install another speaker. Functions OK?
  - Yes → Speaker faulty.
  - No ↓
- Power amplifier faulty.

28 Amplifier — EITHER SPEAKER DOES NOT WORK

- Is power amplifier operating normally?
  - Yes → Radio receiver assembly faulty.
  - No ↓
- Is hiss produced by non–functioning speaker?
  - Yes → Radio receiver assembly faulty.
  - No ↓
- Is there continuity in speaker wire harness?
  - No → Speaker wire harness faulty.
  - Yes ↓
- Temporarily install another speaker. Functions OK?
  - Yes → Speaker faulty.
  - No ↓
- Power amplifier faulty.

29	Amplifier	WOOFER SPEAKER DOES NOT WORK

Is power amplifier operating normally?
- Yes → Radio receiver assembly faulty.
- No ↓

Is hiss produced by non–functioning speaker?
- Yes → Radio receiver assembly faulty.
- No ↓

Is there continuity in speaker wire harness?
- No → Speaker wire harness faulty.
- Yes ↓

Temporarily install another speaker. Functions OK?
- Yes → Speaker faulty.
- No ↓

Woofer amplifier faulty.

30	Noise	NOISE PRODUCED BY VIBRATION OR SHOCK WHILE DRIVING

Is speaker properly installed?
- No → Install properly.
- Yes ↓

Is each system correctly installed?
- No → Install properly.
- Yes ↓

With vehicle stopped, lightly tap each system. Is noise produced?
- Yes → Each system faulty.
- No ↓

Noise produced by static electricity accumulating in the vehicle body.

31	Noise	NOISE PRODUCED WHEN ENGINE STARTS

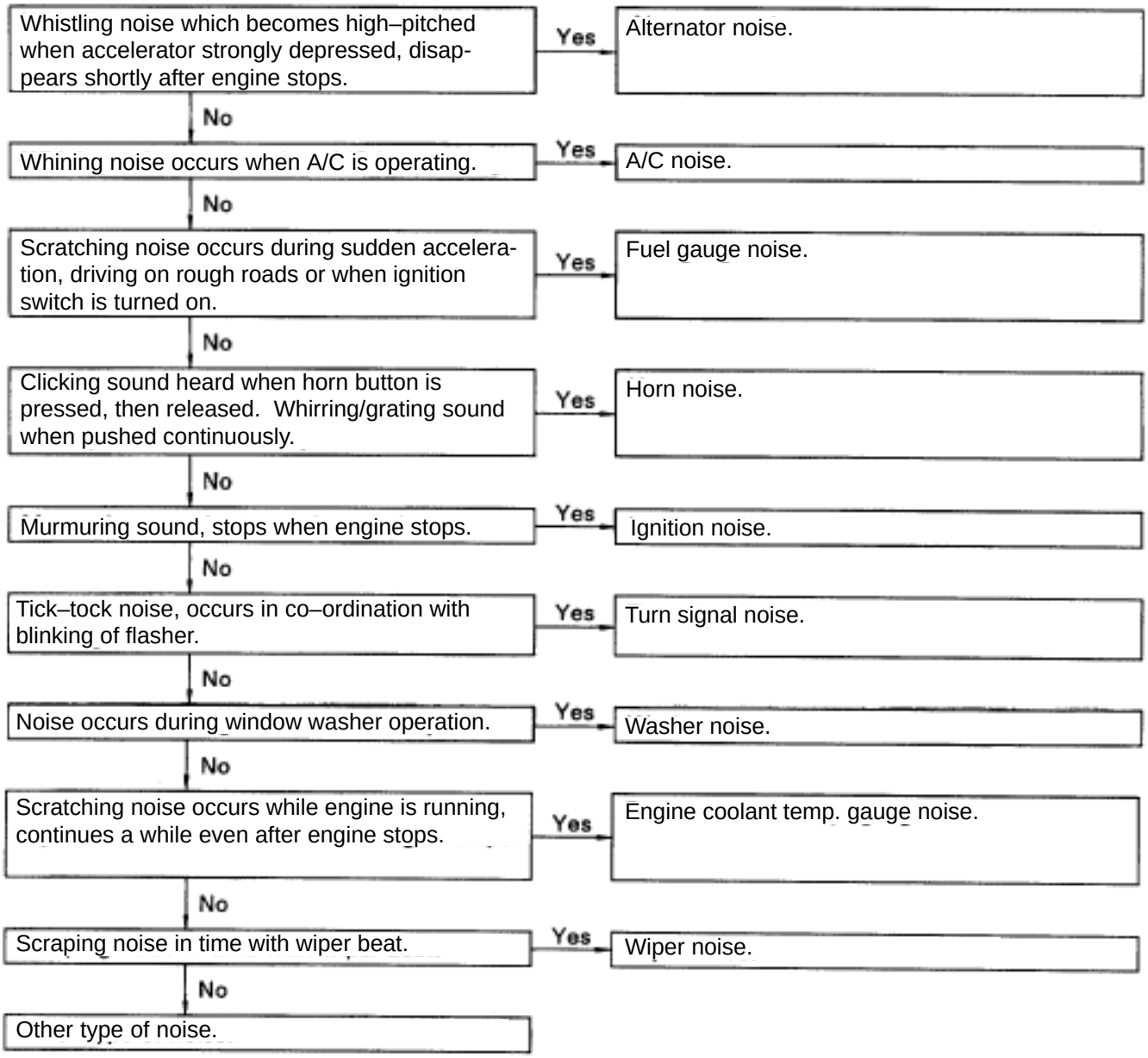

32	Antenna	ANTENNA – RELATED

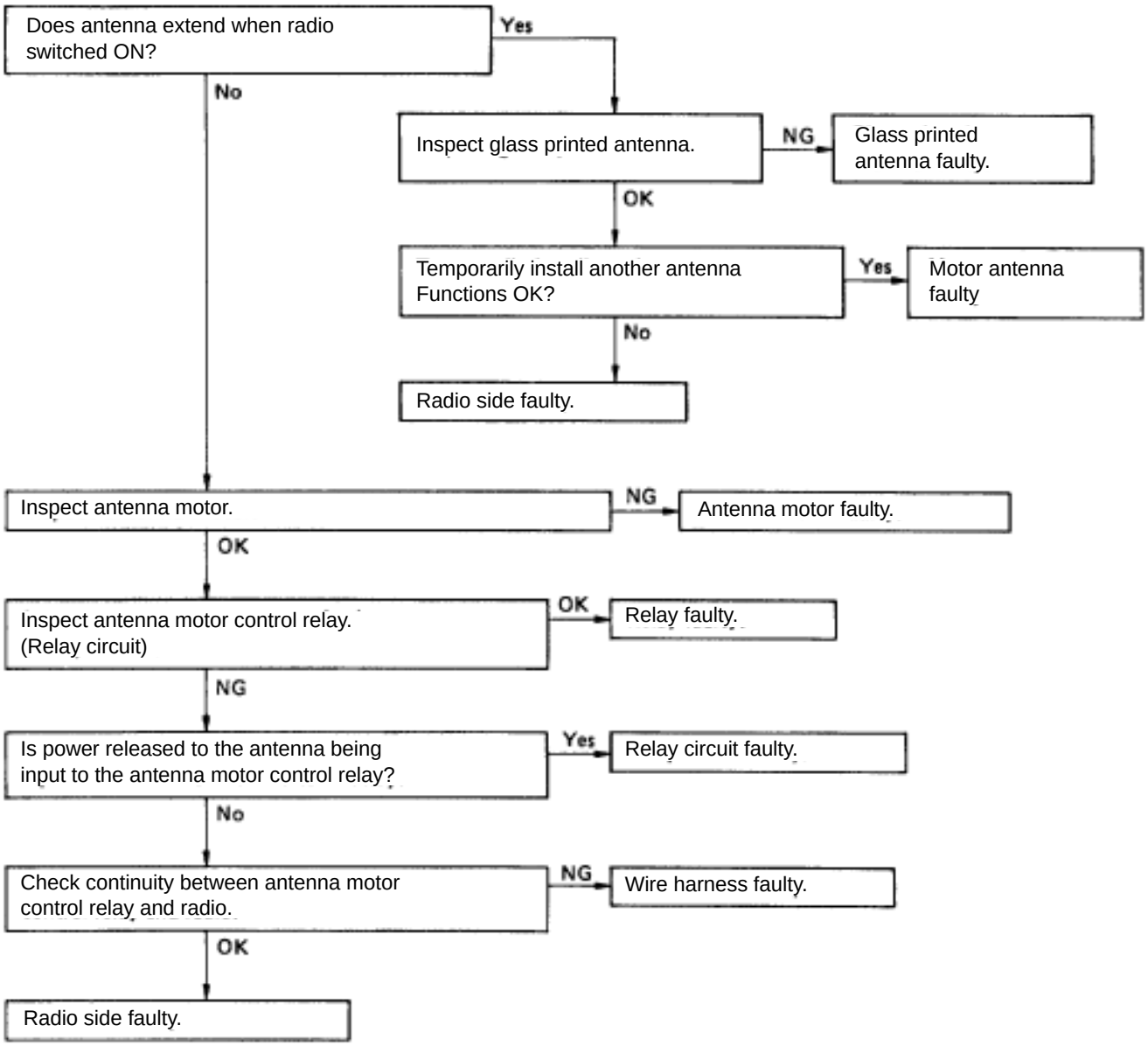

33 Anti–theft System — TROUBLESHOOTING FOR ANTI–THEFT SYSTEM

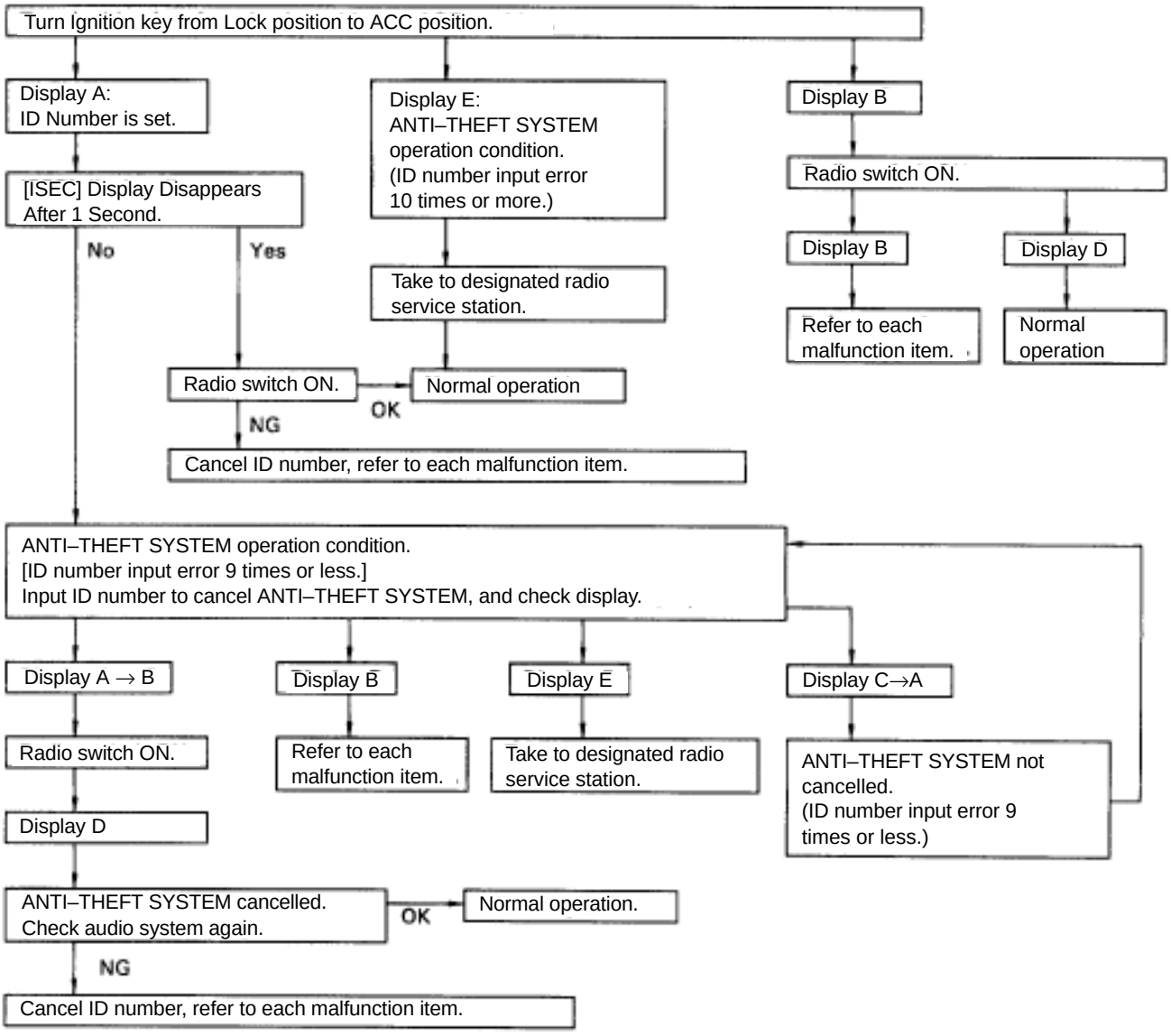

(Liquid Crystal Display (LCD) for Audio System)

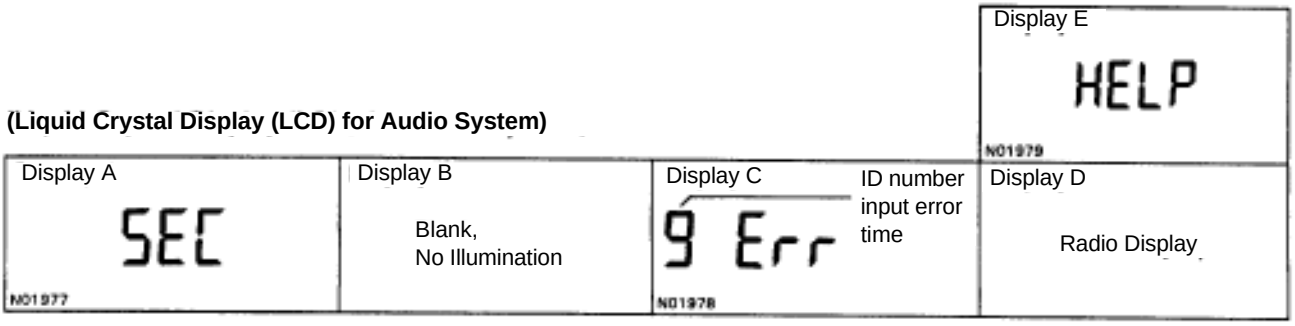

HINT:

a) Refer to O/M for operation details of ANTI–THEFT SYSTEM.

b) When the ID number has been cancelled, reset the same number after completing the operation, or inform the customer that it has been cancelled.

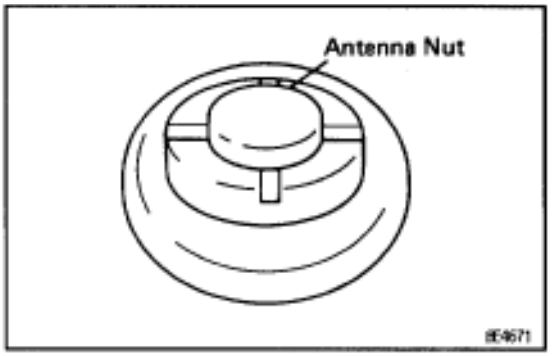

ANTENNA ROD REMOVAL AND INSTALLATION

1. REMOVE ANTENNA ROD

HINT: Do this operation with the negative (–) terminal cable connected to the battery.

(a) Turn the ignition switch to ”LOCK” position.

(b) Remove the antenna nut.

(c) Press the ”AM” button on the radio receiver, and simultaneously turn the ignition switch to ”ACC” position.

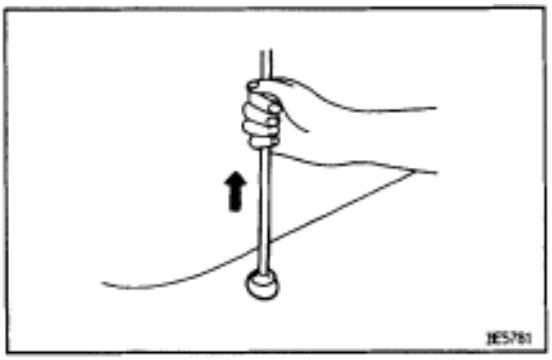

HINT:

- The rod will extend fully and be released from the motor antenna.
- After removing the antenna rod, leave the ignition switch at ”ACC”.

NOTICE: To prevent body damage when the antenna rod is released, hold the rod while it comes out.

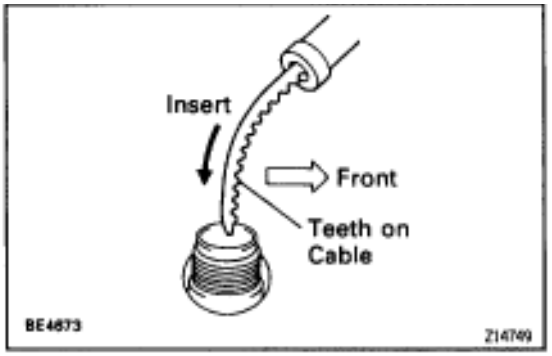

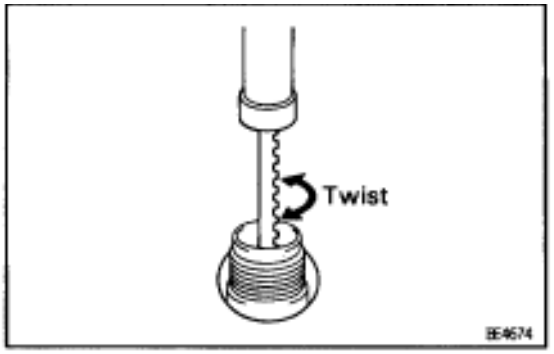

2. INSTALL ANTENNA ROD

(a) Insert the cable of the rod until it reaches the bottom.

HINT:

- When inserting the cable, the teeth on the cable must face toward the rear of the vehicle.
- Insert the cable approx. 400 mm.

(b) Wind the cable to retract the rod by turning the ignition switch to ”LOCK” position.

HINT:

- If the ignition switch is already in ”LOCK” position, do step 1 (c) first, then turn the ignition switch to ”ACC” position.
- In case the cable is not wound, twist it as shown in the illustration.
- Even if the rod has not retracted fully, install the antenna nut and inspect the antenna rod operation. It will finally retract fully.

(c) Inspect the antenna rod operation by pushing the radio wave band select buttons.

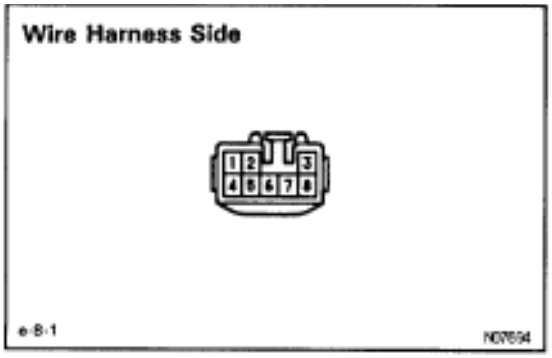

MOTOR ANTENNA CONTROL RELAY INSPECTION

INSPECT RELAY CIRCUIT

Disconnect the connector from the relay and inspect connector on wire harness side, as shown in the chart.

Tester connection to terminal number	Condition	Specified condition
6–Ground	Constant	Continuity
2–3	Constant	Continuity
1–Ground	Constant	Battery positive voltage
4–Ground	Ignition switch position ON	Battery positive voltage
5–Ground	Ignition switch position ACC or ON	Battery positive voltage
7–Ground	Ignition switch position ACC or ON and radio switch ON	Battery positive voltage
8–Ground	Ignition switch position ACC or ON	Battery positive voltage

If circuit is not as specified, replace the relay.

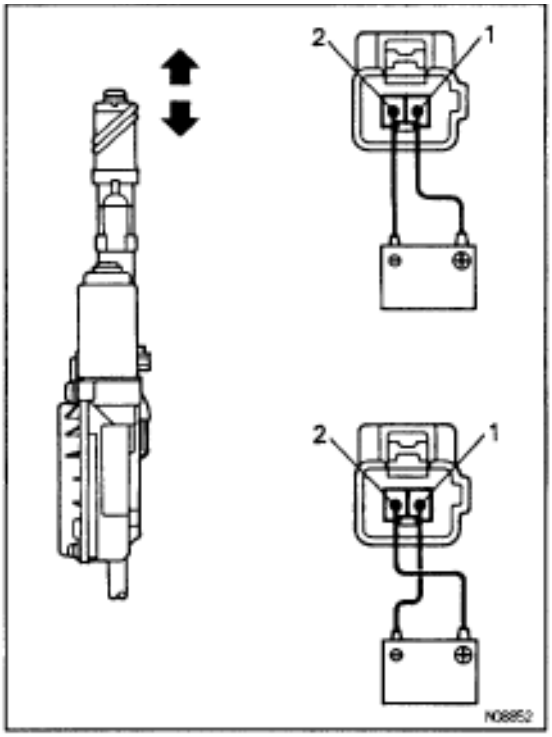

MOTOR ANTENNA INSPECTION

INSPECT MOTOR ANTENNA

(a) Install antenna nut.

(b) Connect the positive (+) lead from the battery to terminal 1 and the negative (–) lead to terminal 2.

(c) Check that the motor turns (moves upward).
NOTICE: These tests must be done quickly (within 3–5 seconds) to prevent the coil from burning out.

(d) Then, reverse the polarity, check that the motor turns the opposite way (moves downward).
NOTICE: These tests must be done quickly (within 3–5 seconds) to prevent the coil from burning out.
HINT: When the motor is normal, lower the antenna to its lowest position.
If operation is not as specified, replace the antenna motor assembly.

GLASS PRINTED ANTENNA INSPECTION

1. INSPECT GLASS PRINTED ANTENNA
(Use same procedure as for ”INSPECT DEFOGGER WIRES”.)

2. REPAIR GLASS PRINTED ANTENNA
(Use same procedure as for ”REPAIR DEFOGGER WIRES”.)

CLOCK
TROUBLESHOOTING

HINT: Troubleshoot the clock according to the table below.

Clock will not operate	1
Clock loses or gains time	2

1 CLOCK WILL NOT OPERATE

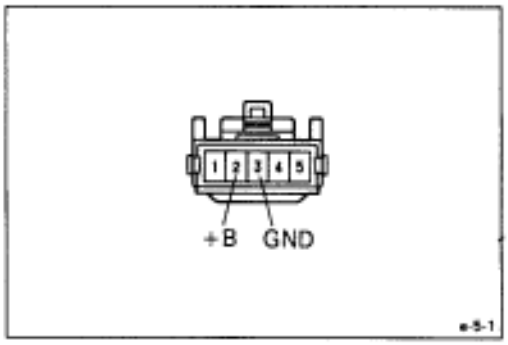

(a) Check that the battery positive voltage is 10 — 16 V.
If voltage is not as specified, replace the battery.

(b) Check that the DOME fuse is not blown.
If the fuse is blown, replace the fuse and check for short.

(c) Troubleshoot the clock as follows.
HINT: Inspect the connector on the wire harness side.

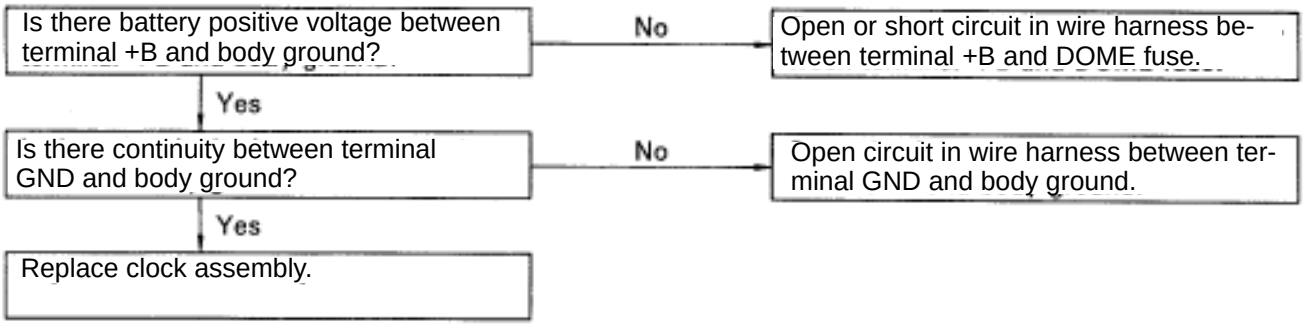

2	CLOCK LOSES OR GAINS TIME

(a) Check that the battery positive voltage is 10 — 16 V.
If voltage is not as specified, replace the battery.

(b) Inspect the error of the clock.
Allowable error (per day): ×2.0 seconds.
If the error exceeds the allowable error, replace the clock assembly.

(c) check if the clock adjusting button is sticking in position and has failed to return.
If the button has not returned, repair or replace the clock assembly.

(d) Troubleshoot the clock as follows:
HINT: Inspect the connector on the wire harness side.

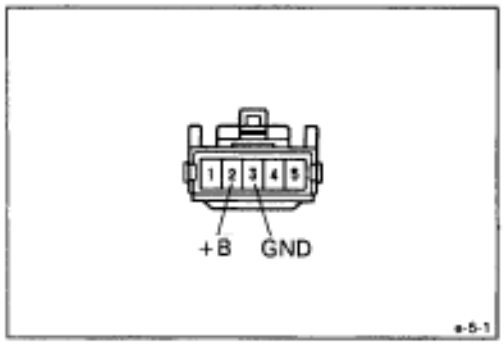

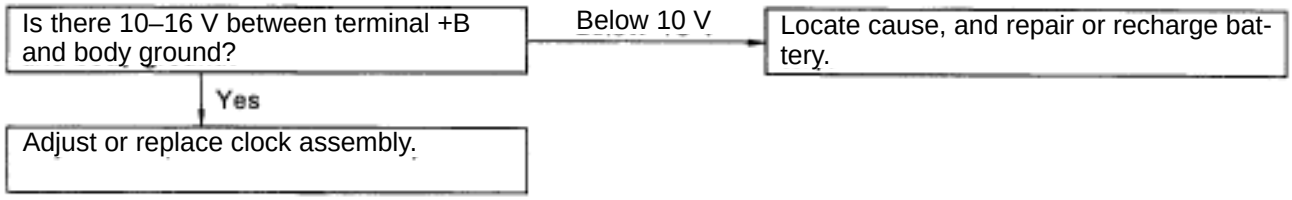

THEFT DETERRENT AND DOOR LOCK CONTROL SYSTEM

PARTS LOCATION

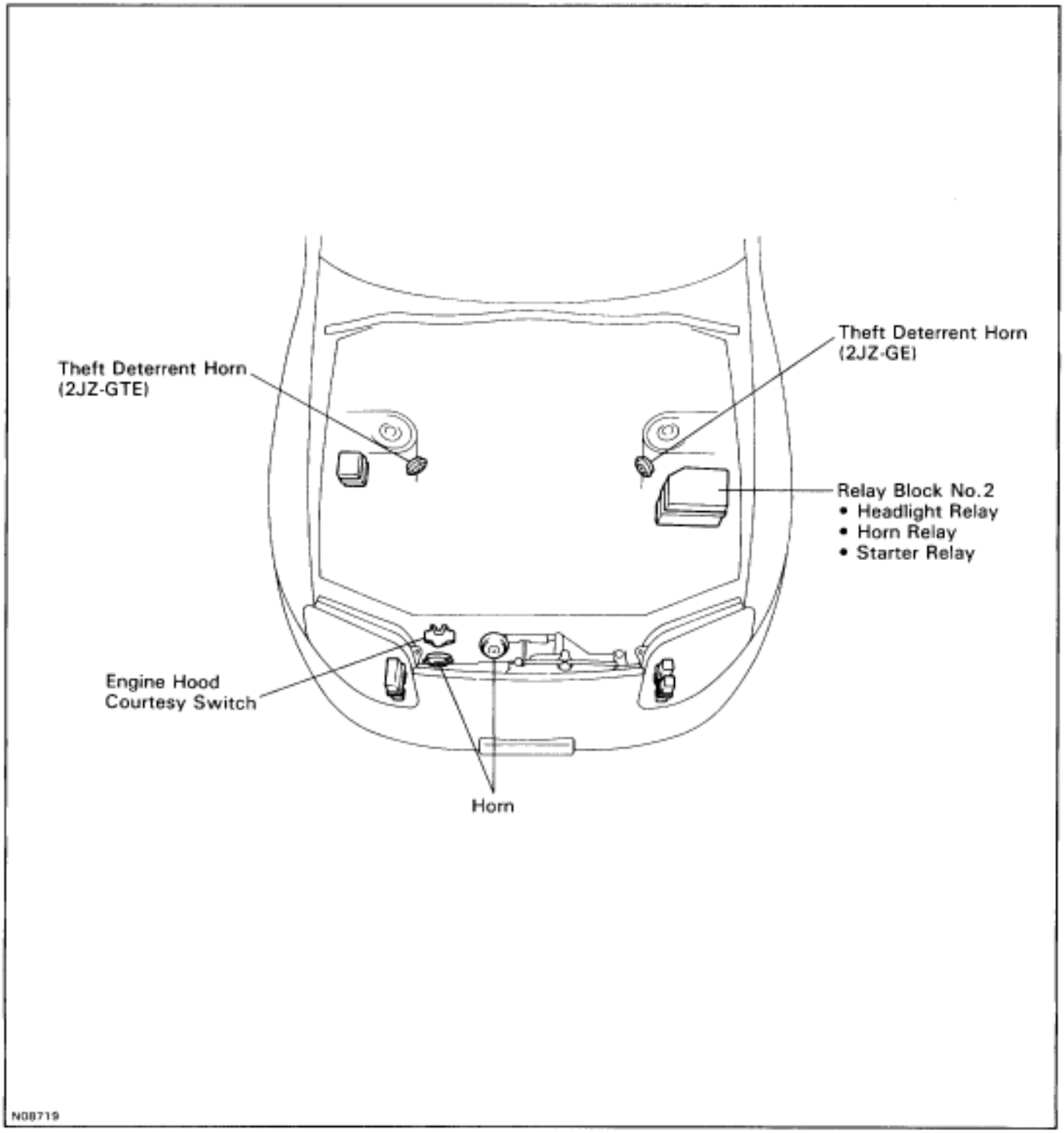

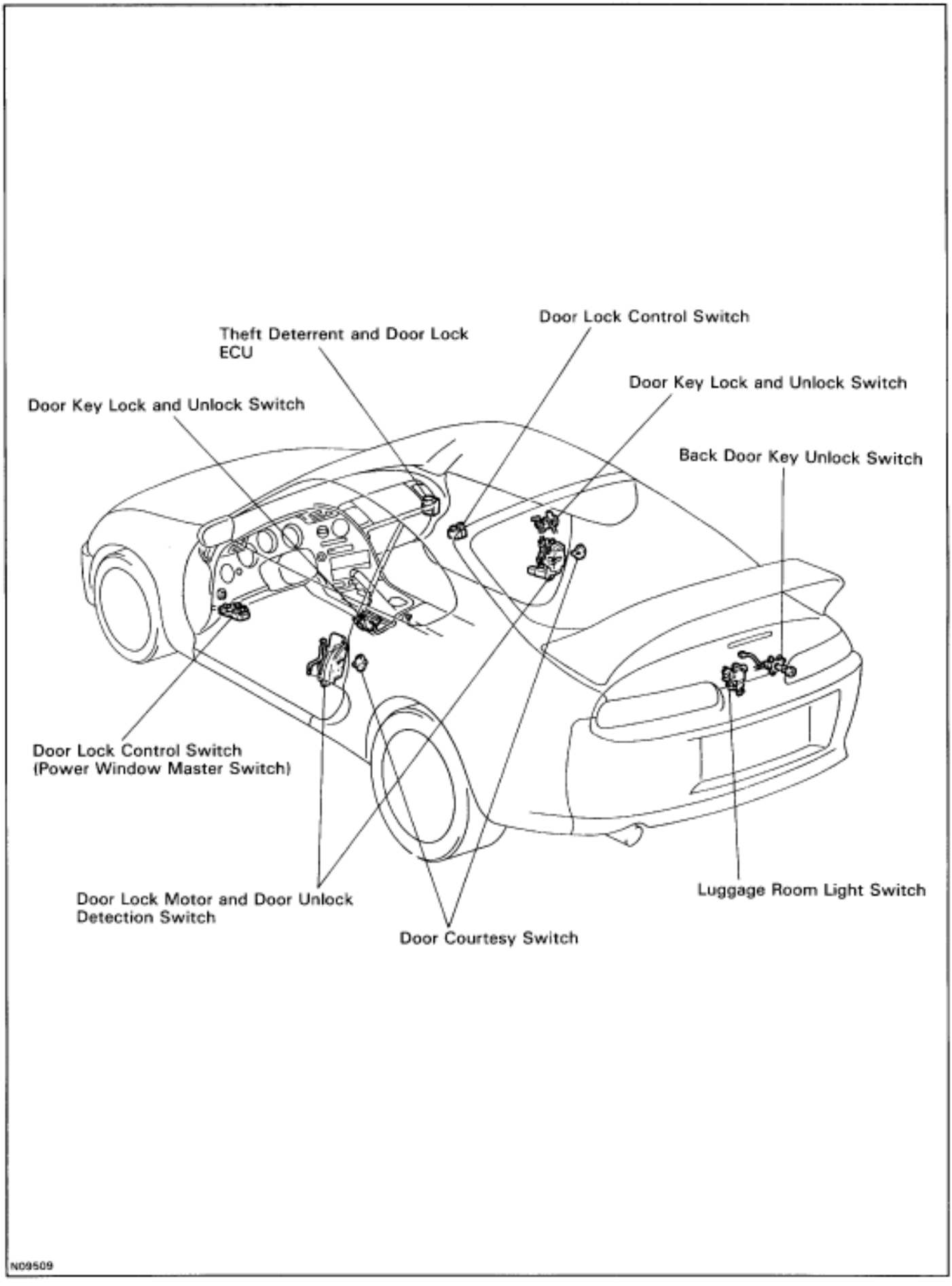
Door Lock Control Switch
Theft Deterrent and Door Lock ECU
Door Key Lock and Unlock Switch
Door Key Lock and Unlock Switch
Back Door Key Unlock Switch
Door Lock Control Switch (Power Window Master Switch)
Door Lock Motor and Door Unlock Detection Switch
Door Courtesy Switch
Luggage Room Light Switch
N09509

HOW TO PROCEED WITH TROUBLESHOOTING

HINT: Troubleshooting of the theft deterrent system is based on the premise that the door lock control system is operating normally. Accordingly, before troubleshooting the theft deterrent system, first make certain that the door lock control system is operating normally.

For troubleshooting using a volt/ohm meter, see page BE–119.

Be sure to use troubleshooting procedure appropriate to the diagnostic tool being used.

Perform troubleshooting in accordance with the procedure on the following page.

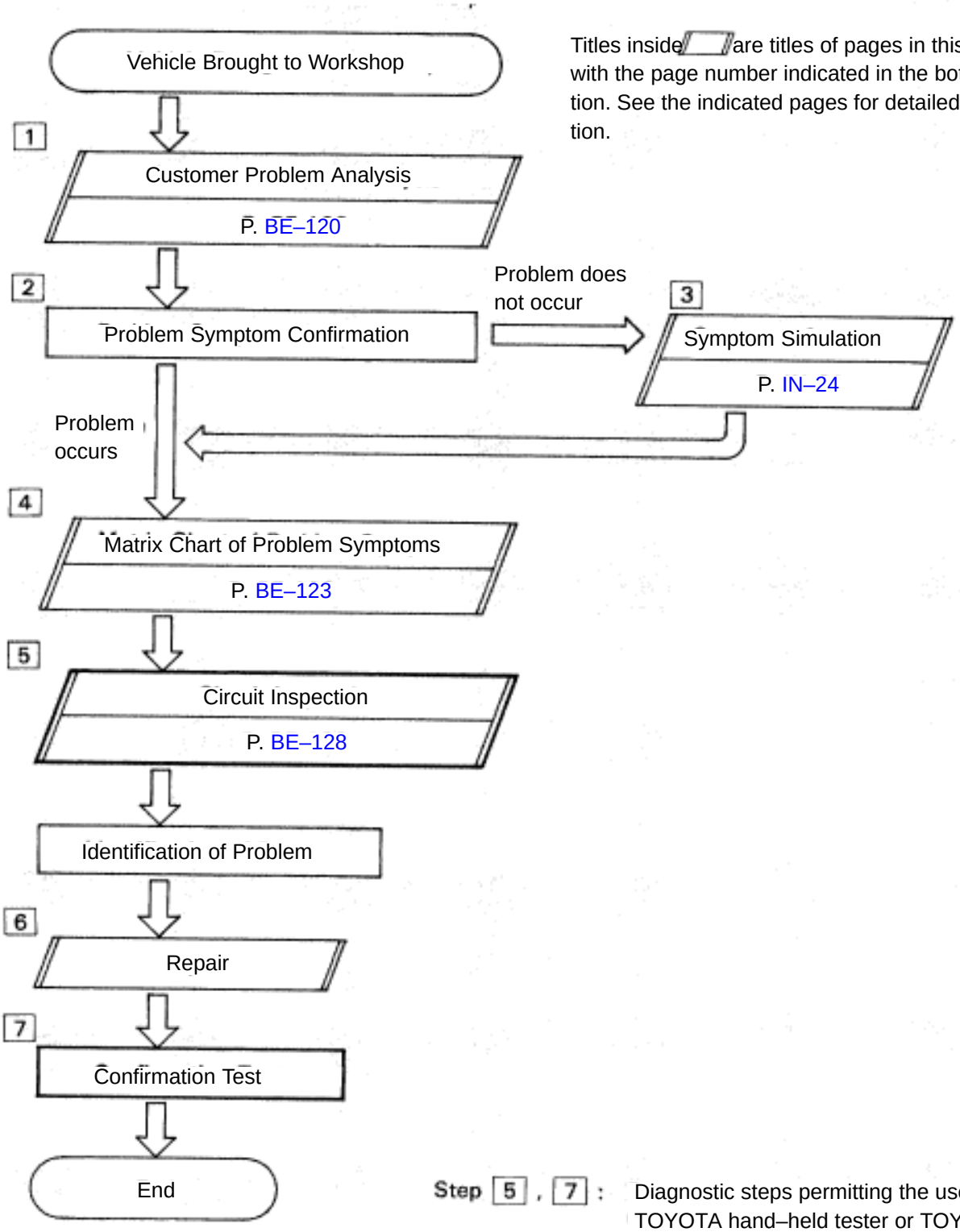

Titles inside ▭ are titles of pages in this manual, with the page number indicated in the bottom portion. See the indicated pages for detailed explanation.

Step 5 , 7 : Diagnostic steps permitting the use of the TOYOTA hand–held tester or TOYOTA brake–out–box.

CUSTOMER PROBLEM ANALYSIS CHECK SHEET

THEFT DETERRENT System Check Sheet

Inspector's Name:

Customer's Name		**Registration No.**	
		Registration Year	/ /
		Frame No.	
Date Vehicle Brought In	/ /	**Odometer Reading**	km Miles

Date Problem First Occurred		/ /
Frequency of Problem Occurs		Constant Sometimes (times per day, month) Once Only
Weather Conditions When Problem Occurred	**Weather**	Fine Cloudy Rainy Snowy Various/Others
	Outdoor Temperature	Hot Warm Cool Cold (Approx. °F (°C))

Problem Symptom

☐ Theft deterrent system cannot be set.

☐ Indicator light does not flash when the theft deterrent system is set. (It stays on or does not light at all.)

☐ Theft deterrent system does not operate.	☐ When unlocked using the door lock knob. ☐ When the engine hood is opened.	Malfunction ☐ Horns only ☐ Theft deterrent horn only ☐ Headlights only ☐ Taillights only ☐ Starter cut only ☐ Door lock operation only
☐ System cannot be cancelled once set.	☐ When door is unlocked using key or wireless door lock control system. ☐ When the key is inserted in the ignition key cylinder and turned to ACC or ON position. (However, only when the system has never operated) ☐ When the luggage compartment door is opened with the key.	
☐ System cannot be cancelled during warning operation.	☐ When door is unlocked using key or wireless door lock control system. ☐ When the key is inserted in the ignition key cylinder and turned to ACC or ON position.	

☐ Warning operation starts when the system is set and the door or luggage compartment door is opened with the key.

☐ Others

SYSTEM INSPECTION

1. SETTING OF THE THEFT DETERRENT SYSTEM

Setting Conditions

(a) Close all the doors.
(b) Close the engine hood and luggage compartment door.
(c) Remove the ignition key from the ignition key cylinder.

Setting Operation

When any of the following operations (a) or (c) is done, the theft deterrent indicator light will light up as described.

(a) Lock the left or right front door using the key.
(All doors are locked by key–interlinked lock operation)
(b) With the rear doors locked and with one of the front doors locked, lock the other front door without using the key (keyless door lock).

Elapsed time after operation	Indicator light
Within about 30 seconds	Lights up
After about 30 seconds	Blinks *1

*1: 1 sec. on, 1 sec. off

HINT: When the theft deterrent system is set, doors cannot be locked or unlocked with the door lock control switch and the luggage compartment door cannot be unlocked with the luggage compartment door opener switch.

2. CANCELLING OF THE THEFT DETERRENT SYSTEM IN THE SET CONDITION

Check if the theft deterrent indicator light is blinking.

Cancelling Operation

When any of the following operation (a), (b), (c) or (d) is done, the theft deterrent system is cancelled and indicator light will go off.

(a) Unlock the left or right front door using the key.
(b) Insert the ignition key in the ignition key cylinder and turn it to the ACC or ON position.
(This is operative only when the theft deterrent system has never operated.)
(c) Unlock the luggage compartment door with the key. *1

*1: The theft deterrent system is temporarily cancelled only while the luggage compartment door is open. Approximately 2 seconds after the luggage compartment door is closed, the theft deterrent system is reset.

3. CHECK OF THE THEFT DETERRENT SYSTEM OPERATION.

Check if the theft deterrent indicator light is blinking.

When any of the following operations (a) or (b) is done, the system sounds the horns and theft deterrent horn and flashes the headlights and taillights for about one minute to alert. At the same time, the system disconnects the starter motor circuit and locks all doors (if all doors are not locked, the system repeats door locking operation every 2 seconds during the one minute alert time).

(a) Open the engine hood using the engine hood opener lever.
(b) Unlock any of the front or rear doors without key operation.

4. CANCELLING OF THE THEFT DETERRENT SYSTEM IN OPERATING CONDITION.

The theft deterrent operation can be cancelled when any of the following conditions is met:

No.	Condition	Cancelling Operation
1	Unlock left or right door with the key.	•
2	Unlock doors with wireless door lock control system.	•
3	Insert key into ignition key cylinder and turn it to ACC or ON position.	• *2
4	About 1 minute passes after theft deterrent operation begins.	Automatic stop *1

*1: In this case, the theft deterrent system resets in about 2 seconds after if all doors are closed.
*2: The alarm will be off, but the engine will not operate. To restart the engine, see No.1.

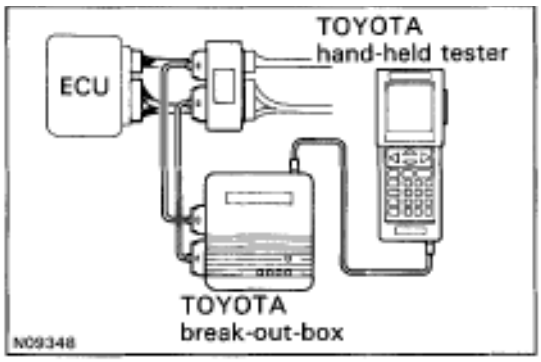

ECU TERMINAL VALUES MEASUREMENT USING TOYOTA BREAK–OUT–BOX AND TOYOTA HAND–HELD TESTER

1. Hook up the TOYOTA break–out box and TOYOTA handheld tester to the vehicle.
2. Read the ECU input/output values by following the prompts on the hand–held tester screen.
   HINT: TOYOTA hand–held tester has a ”Shapshot” function. This records the measured values and is effective in the diagnosis of intermittent problems.
   Please refer to the TOYOTA hand–held tester/TOYOTA break–out–box operator’s manual for further details.

MATRIX CHART OF PROBLEM SYMPTOMS

Proceed to the reference page shown in the matrix chart below for each malfunction symptom and troubleshoot for each circuit.

HINT: Troubleshooting of the theft deterrent system is based on the premise that the door lock control system is operating normally. Accordingly, before troubleshooting the theft deterrent system, first make certain that the door lock control system is operating normally.

Theft Deterrent System

Details of Problem			Inspecting Circuit *1	See Page
The theft deterrent system cannot be set			1. Indicator light circuit	BE–128
			2. Luggage compartment door key lock and unlock switch circuit	BE–142
			3. Luggage Room Light switch circuit	BE–144
			4. Door courtesy switch circuit	BE–147
			5. Engine hood courtesy switch circuit	BE–148
The indicator light does not blink when system is set			Indicator light circuit	BE–128
When the system is set	When the back door is opened by a method other than the key.	The system does not Operate	Luggage compartment door courtesy switch circuit	BE–144
	When the engine hood is opened		Engine hood courtesy switch circuit	BE–148
While the system is in warning operation	Horns do not sound		Horn relay circuit	BE–132
	Theft deterrent horn does not sound		Theft deterrent horn circuit	BE–134
	Headlights do not flash		Headlight control relay circuit	BE–136
	Taillights do not flash		Taillight control relay circuit	BE–138
	The starter cut is not cut off		Starter relay circuit	BE–130
When the System is Set	It is not cancelled when the ignition key is Turned to ACC or ON position		Ignition switch circuit	BE–140
	It still operates when the back door is Opened with the key		Luggage compartment door key lock and unlock switch circuit	BE–142
System is still set even when a rear door is open			Door courtesy switch circuit	BE–147
Even when the System is not set	Horns sound		Horn relay circuit	BE–132
	Theft deterrent horn sounds		Theft deterrent horn circuit	BE–134
	Headlights stay on		Headlight control relay circuit	BE–136
	Taillights stay on		Taillight control relay circuit	BE–138

*1 : If numbers are given to the circuit proceed with troubleshooting in the order indicated by those numbers.

Door Lock System

Trouble	Suspect Area	See Page
Whole function of the door lock control system does not operate.	1. ECU Power Source Circuit 2. Actuator Power Source Circuit 3. Door Lock Motor Circuit 4. Theft Deterrent and Door Lock Control ECU	BE–150 BE–152 BE–154 BE–125
All doors or some doors are not locked and unlocked with the door lock control switch and Key lock and unlock switch.	1. Door Lock Control Switch Circuit 2. Door Key Lock and Unlock Switch Circuit 3. Door Lock Motor Circuit 4. Theft Deterrent and Door Lock Control ECU	BE–156 BE–158 BE–154 BE–125
Doors cannot be locked with the door lock control switch. (Doors lock and unlock normally With the key lock and unlock switch.)	1. Door Lock Control Switch Circuit 2. Key Unlock Warning Switch Circuit 3. Door Courtesy Switch Circuit 4. Theft Deterrent and Door Lock Control ECU	BE–156 BE–160 BE–147 BE–125
Doors are not locked or unlocked with the door key Lock and unlock switch. (Doors lock and unlock normally with the door lock control switch.)	1. Door Key Lock and Unlock Switch Circuit 2. Theft Deterrent and Door Lock Control ECU	BE–158 BE–125
Key confinement prevention function does not Operate. (Doors lock and unlock normally with The door key lock and unlock switch.)	1. Key Unlock Warning Switch Circuit 2. Door Unlock Detection Switch Circuit 3. Theft Deterrent and Door Lock Control ECU	BE–160 BE–145 BE–125

TERMINALS OF ECU

No.	Symbol	Terminal Name
T8–1	+B2	Power Source
T8–2	ACT–	Door Lock Motor
T8–3	ACT+	Door Lock Motor
T8–4	E	Ground
T8–5	–	–
T8–6	RLY	Power Main Relay
T8–7	IG	Ignition Switch ”ON”
T8–8	ACC	Ignition Switch ”ACC”
T8–9	–	–

No.	Symbol	Terminal Name
T9–1	+B1	Power Source
T9–2	–	–
T9–3	–	–
T9–4	DSWL	Luggage Compartment Door Courtesy Switch
T9–5	L1	Door Lock Control Switch (Lock)
T9–6	UL3	Door Key Lock and Unlock Switch
T9–7	DSWD	Door Open Detection Switch
T9–8	UL1	Door Lock Control Switch (Unlock)
T9–9	LUG	Luggage Compartment Door Key Lock and Unlock Switch
T9–10	HEAD	Headlight Control Relay
T9–11	SH	Theft Deterrent Horn
T9–12	IND	Security Indicator Light
T9–13	–	–
T9–14	FOD	Engine Hood Courtesy Switch
T9–15	LSWD, UL2	Door Unlock Detection Switch or Door Key Lock and Unlock Switch
T9–16	–	–
T9–17	–	–
T9–18	–	–
T9–19	DSWP	Door Open Detection Switch
T9–20	KSW	Key Unlock Warning Switch
T9–21	LSWP	Door Unlock Detection Switch
T9–22	L2	Door Key Lock and Unlock Switch
T9–23	TAIL	Taillight Control Relay
T9–24	HORN	HORN Relay
T9–25	SRLY	Ignition Switch ”ST”

T8 T9

Theft Deterrent and Door Lock Control ECU

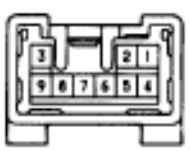

N07083

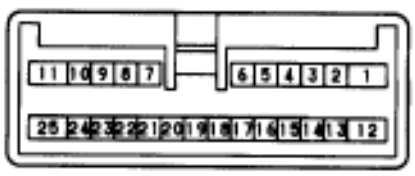

N07089

STANDARD VALUE OF ECU TERMINAL

Terminals	Symbols	Condition	Standard Value
T8–1–Ground (+B2–Ground)	L–W–Ground	Always	10–14 V
T8–2–T8–3 (ACT^-–ACT^+)	LR–LY	Ignition Switch is turned to ”OFF” position.	Below 50 Ω
T8–6–T8 (RLY–PRLY)	R–L–Ground	Always	10–14 V
T8–7–Ground (IG–Ground)	B–R–Ground	Ignition switch is turned to ”ON” position.	10–14 V
T8–7–T8–4 (ACC–E)	LR–WB	Ignition switch is turned to ”ACC” position.	10–14 V
T9–Ground (+B1–Ground)	R–Ground	Always	10–14 V
T9–4–T8–4 (DSWL–E)	LG–WB	Luggage compartment door courtesy switch ON (door opened).	Below 1 Ω
		Luggage compartment door courtesy switch OFF (door closed).	1 MΩ or higher
T9–5–T8–4 (L1–E)	RW–WB	Door lock control switch ”lock” position.	Below 1 Ω
		Door lock control switch OFF or ”unlock” position.	1 M Ω or higher
T9–6–T8–4 (UL3–E)	G–WB	Door key lock and unlock switch ”unlock” position.	Below 1 Ω
		Door key lock and unlock switch OFF or ”lock” position.	1 MΩ or higher
T9–7–T8–4 (DSWD–E)	RB–WB	Door open detection switch (driver’s) ON (door opened).	Below 1 Ω
		Door open detection switch (driver’s) OFF (door closed).	1 M Ω or higher
T9–8–T8–4 (UL1–E)	GR–WB	Door lock control switch ”unlock” position.	Below 1 Ω
		Door lock control switch OFF or ”lock” position	1 MΩ or higher
T9–9–T8–4 (LUG–E)	L–WB	Luggage compartment door key lock and unlock switch ON	Below 1 Ω
		Luggage compartment door key lock and unlock switch OFF	1 MΩ or higher
T9–10–T8–4 (HEAD–E)	RY–WB	Light control switch other than ”HEAD” position.	10–14 V
T9–11–T8–4 (SH–E)	WL–WB	Always	10–14 V

Terminals	Symbols	Condition	Standard Value
T9–12–Ground (IND–Ground)	W–L–Ground	Always	Below 270 Ω
T9–14–T8–4 (FOD–E)	VR–WB	Engine hood courtesy switch ON (hood opened).	Below 1 Ω
		Engine hood courtesy switch OFF (hood closed).	1 M Ω or higher
T9–15–T8–4 (LSWD–E)	LW–WB	Door unlock detection switch ON (door opened).	Below 1 Ω
		Door unlock detection switch OFF (door closed).	1 M Ω or higher
T9–15–T8–4 (UL2–E)	W–WB	Door key lock and unlock switch ”unlock” position	Below 1 Ω
		Door key lock and unlock switch OFF or ”lock” position	1 MΩ or higher
T9–19–T8–4 (DSWP–E)	RL–WB	Door open detection switch (passenger’s) ON (door opened).	Below 1 Ω
		Door open detection switch (passenger’s) OFF (door closed).	1 MΩ or higher
T9–20–T8–4 (KSW–E)	Y–WB	Key unlock warning switch ON.	Below 1 Ω
		Key unlock warning switch OFF.	1 MΩ or higher
T9–21–T8–4 (LSWP–E)	GB–WB	Door unlock detection switch ON (door opened).	Below 1 Ω
		Door unlock detection switch OFF (door closed).	1 MΩ or higher
T9–22–T8–4 (L2–E)	GY–WB	Door key lock and unlock switch ”lock” position.	Below 1 Ω
		Door key lock and unlock switch OFF or ”unlock” position.	1 MΩ or higher
T9–23–T8–4 (TAIL–E)	GW–WB	Light control switch ”TAIL” position.	10–14 V
T9–24–T8–4 (HORN–E)	LR–WB	Horn switch OFF.	10–14 V
T9–25–Ground (SRLY–Ground)	L–O–Ground	Ignition switch is turned to ”ST” position. (When park / neutral position switch ”P” position)	10–14 V

CIRCUIT INSPECTION

Indicator Light Circuit

CIRCUIT DESCRIPTION

When the theft deterrent system is preparing to set, this circuit lights up the indicator light. When the system has been set, it continually turns the indicator light on for 1 second and turns it off for 1 second, thus blinking the indicator light.

WIRING DIAGRAM

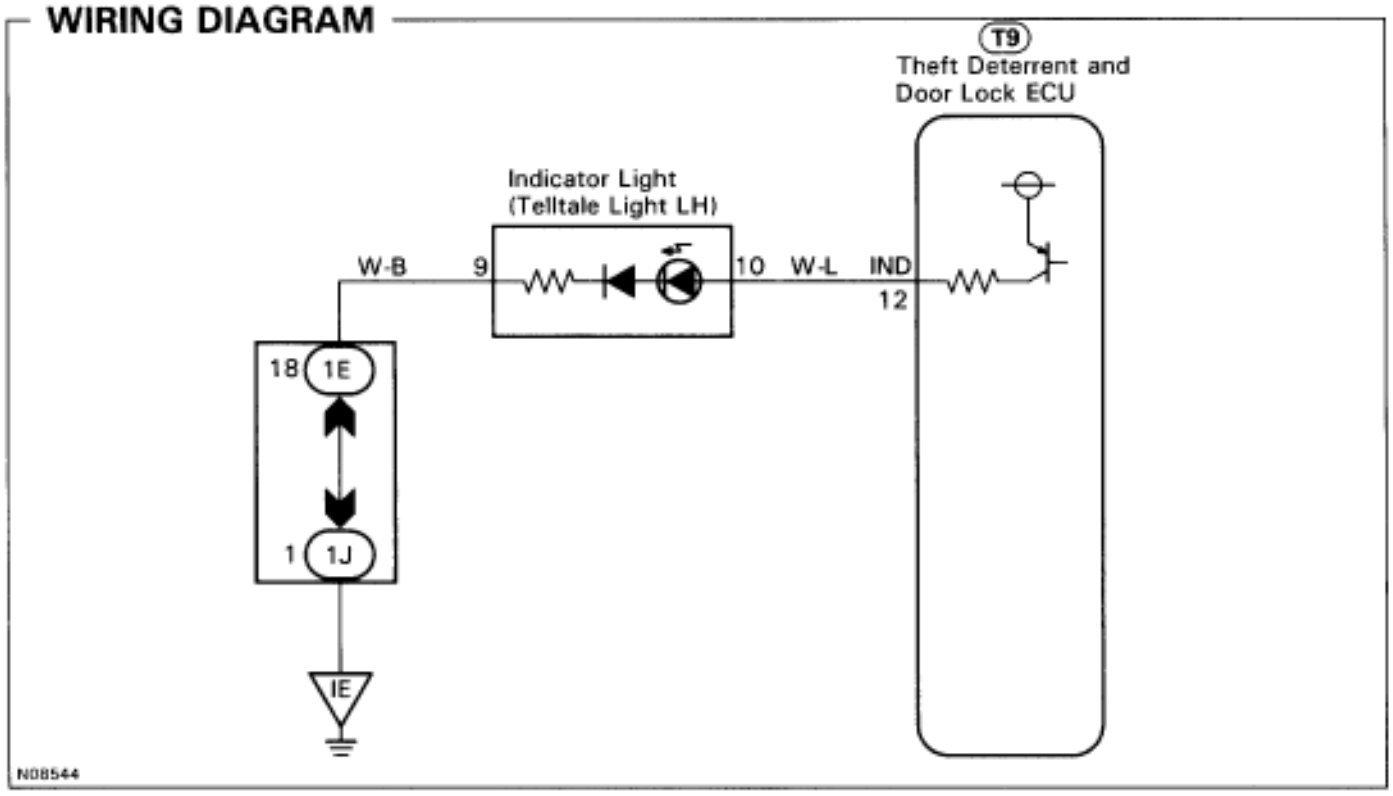

INSPECTION PROCEDURE

1 Check indicator light

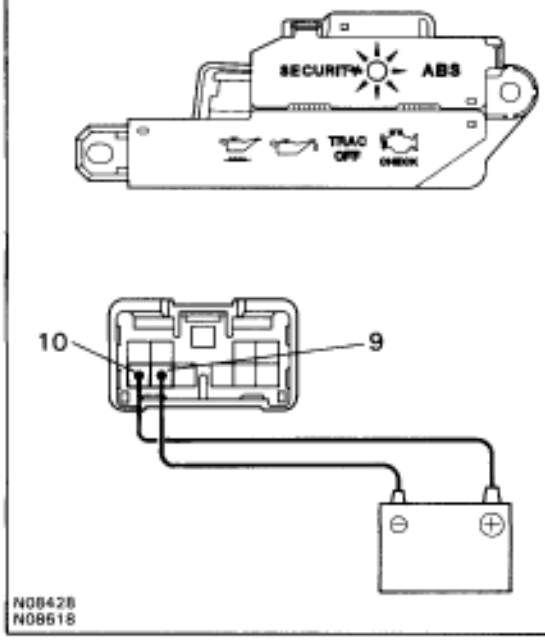

P (2) Remove instrument panel cluster finish panel.
(3) Disconnect telltale light RH connector.

C Connect positive (+) lead to terminal 10 and negative (–) lead to terminal 9 of indicator light connector.

OK **Indicator light comes on.**

OK

NG → **Replace telltale light RH.**

2 Check harness and connector between theft deterrent and door lock ECU and indicator light, indicator light and body ground (See page IN–30).

OK

NG → **Repair or replace harness or connector.**

Check and replace theft deterrent and door lock ECU. *1

*1: When there is a malfunction that the theft deterrent system cannot be set, proceed to the next numbered circuit inspection shown on matrix chart (See page BE–123).

Starter Relay Circuit

CIRCUIT DESCRIPTION

When the theft deterrent system is activated, contact (a) in the ECU becomes open, creating an open circuit in terminal ST circuit and making the starter inoperative (starter cut).
In this condition, if one of the following operations is done, the contact (a) in the ECU is grounded, thus cancelling the starter cut:

(1) The front LH and RH door is unlocked with a key.

WIRING DIAGRAM

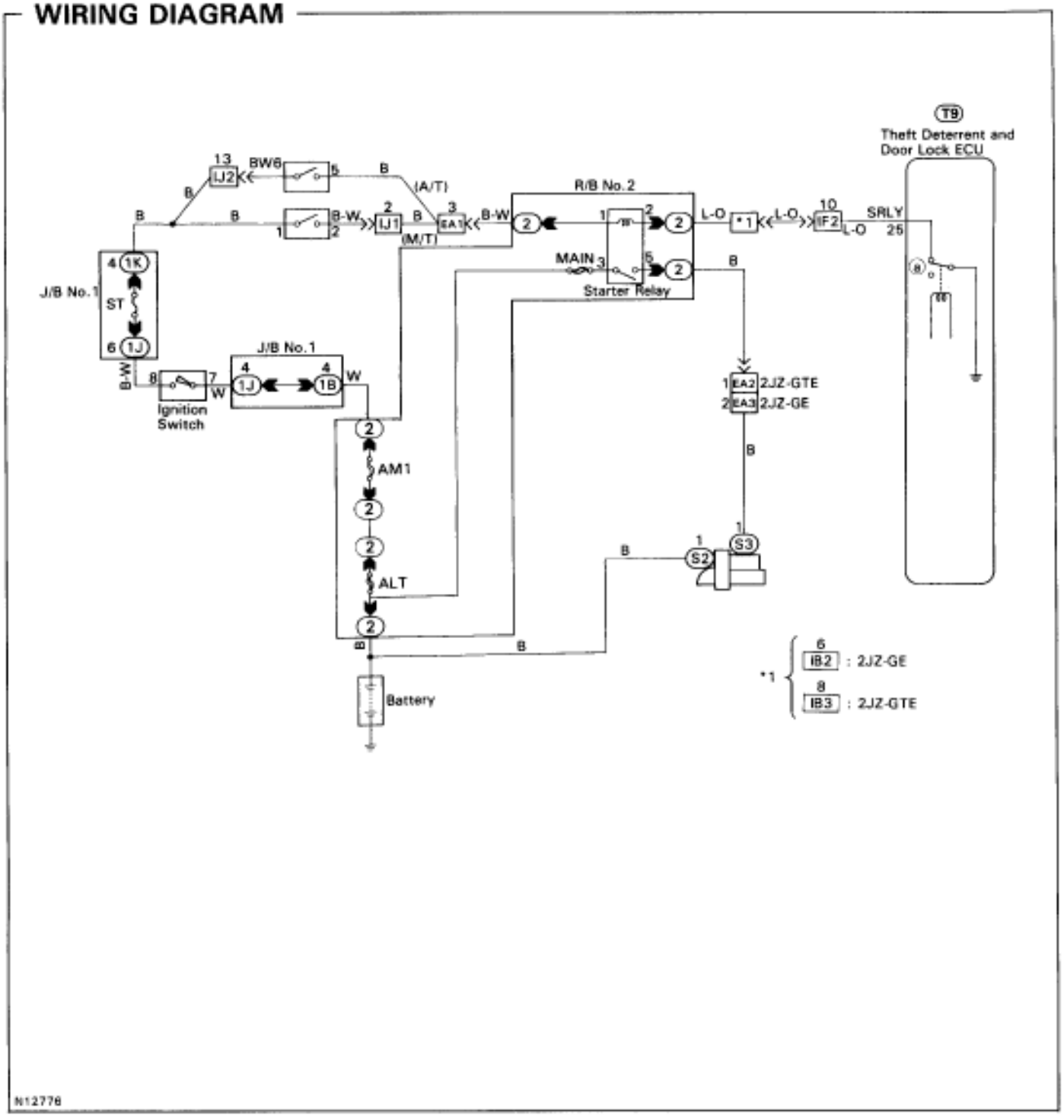

INSPECTION PROCEDURE

HINT: This troubleshooting is based on the premise that engine cranking occurs.

If the engine does not crank, proceed to engine troubleshooting on page EG–381 or 487 (Vol. 1).

1 Check voltage between terminal SRLY of theft deterrent and door lock ECU connector and body ground.

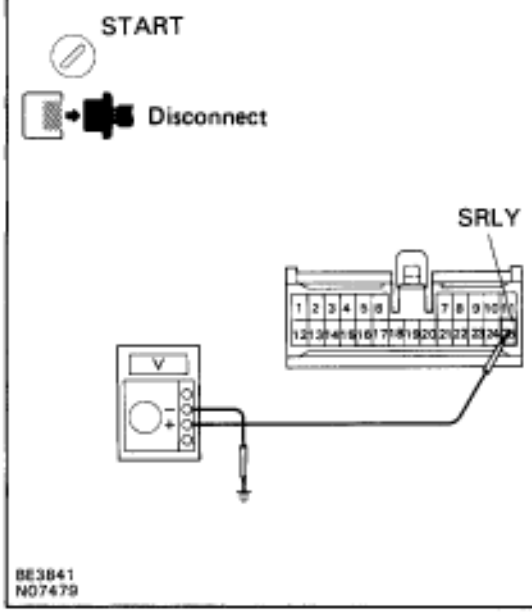

P (1) Remove instrument panel panel. (See BO section.)

(2) Disconnect the ECU connector.

C Measure voltage between terminal SRLY of theft deterrent ECU connector and body ground when ignition switch is turned on.

OK **Voltage: 10 – 14 V**

NG

OK → **Check and replace theft deterrent ECU.**

Check and repair harness and connector between starter and theft deterrent and door lock ECU (See page IN–30).

Horn Relay Circuit

CIRCUIT DESCRIPTION

When the theft deterrent system is activated, it causes the Tr in the ECU to switch on and off in approximately 0.2 sec. cycles. This switches the horn relay on and off, thus the horns blow (See the wiring diagram below). In this condition, if any of the following operations is done, the Tr in the ECU goes off and the horn relay switches off, thus stopping the horns from blowing:

(1) The front LH or RH door is unlocked with a key.
(2) The ignition switch is turned to ACC or ON position.
(3) Approximately 1 minute elapses.

WIRING DIAGRAM

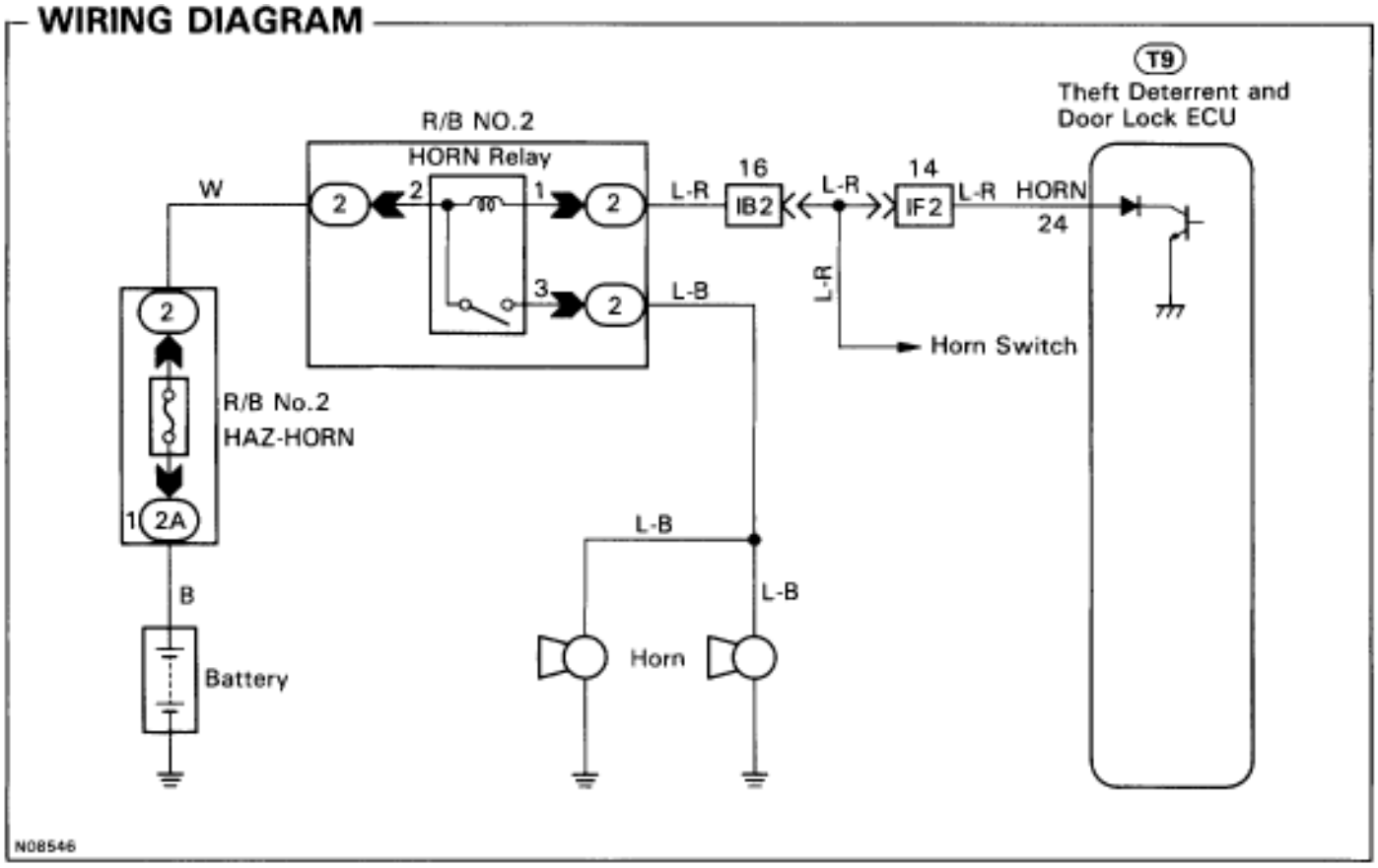

INSPECTION PROCEDURE

1 **Check voltage between terminal HORN of theft deterrent and door lock ECU connector and body ground.**

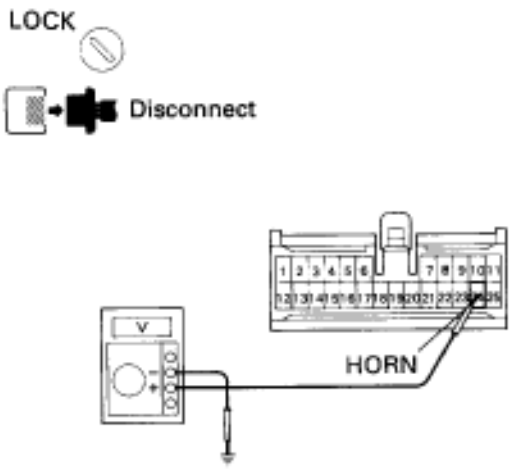

Replace telltale light RH.

P (1) Remove instrument panel. (See BO section)

(2) Disconnect the ECU connector.

C Measure voltage between terminal HORN of theft deterrent ECU connector and body ground.

OK **Voltage: 10 – 14 V**

NG

OK **Check and replace theft deterrent and door lock ECU.**

Check and repair harness and connector between theft deterrent and door lock ECU and horn relay (See page IN–30).

Theft Deterrent Horn Circuit

CIRCUIT DESCRIPTION

When the theft deterrent system is activated, contact (a) and contact (b) in the ECU close alternately in cycles of approximately 0.2 sec., causing the theft deterrent horn to blow (See the wiring diagram below).
In this condition, if any of the following operations is done, the contact (a) in the ECU opens, thus stopping the theft deterrent horn from blowing:

(1) The front LH or RH door is unlocked with a key.
(2) The ignition switch is turned to ACC or ON position.
(3) Approximately 1 minute elapses.

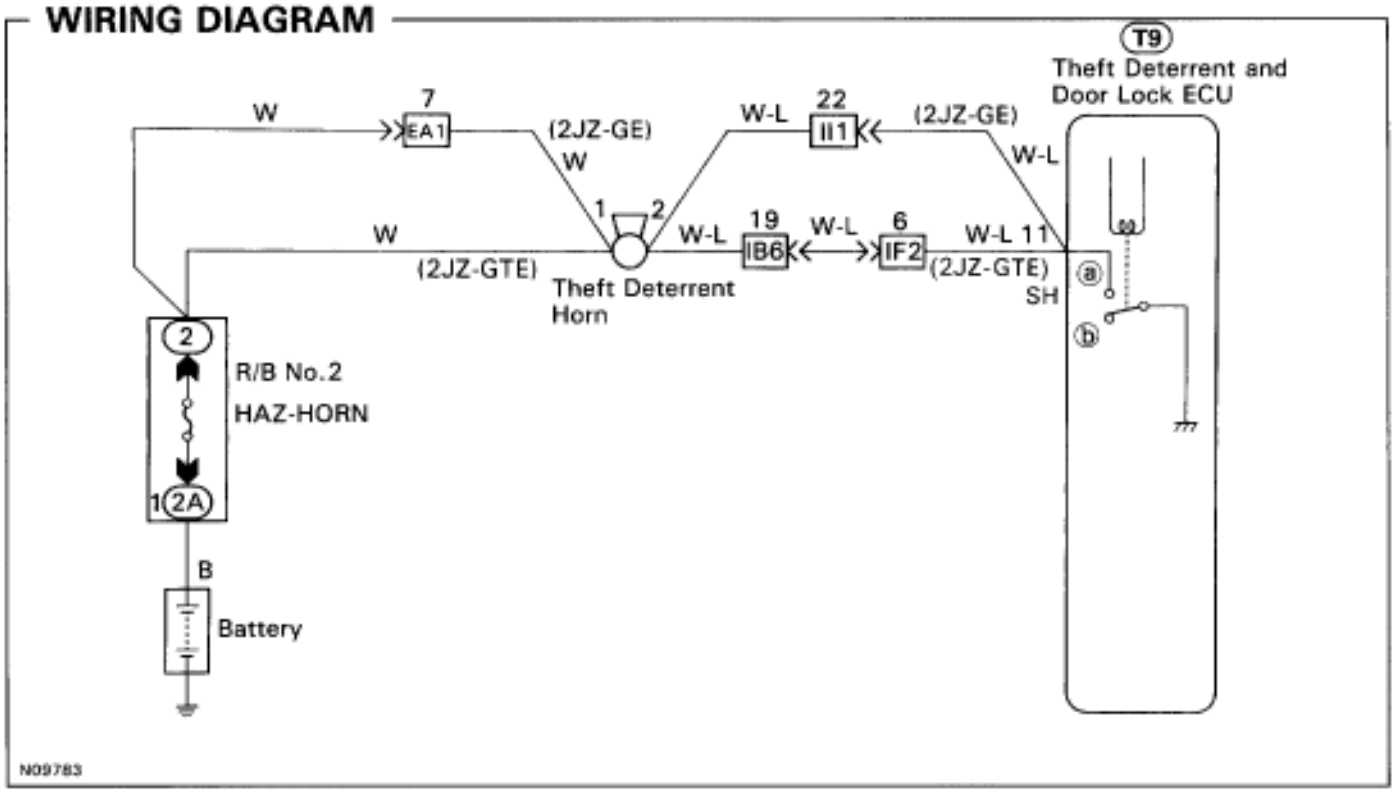

INSPECTION PROCEDURE

1 Check voltage between terminal SH of theft deterrent horn connector and body ground.

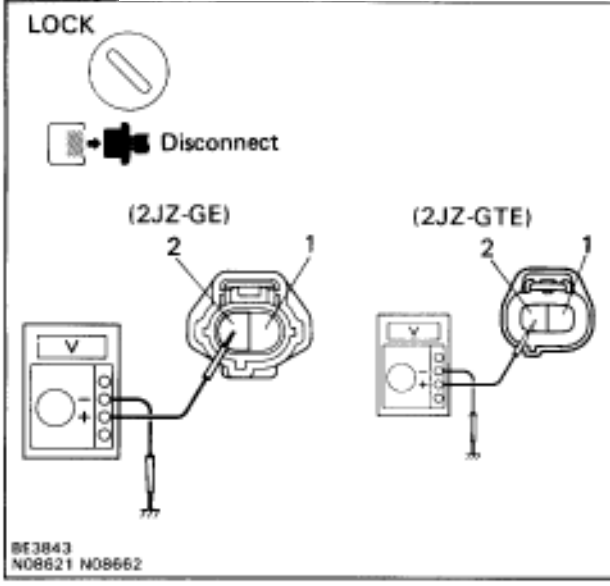

P Remove the theft deterrent horn and disconnect the connector.

C Measure voltage between terminal 1 of theft deterrent horn connector and body ground.

OK **Voltage: 10 – 14 V**

OK

NG **Check and repair harness and connector between HORN fuse and theft deterrent horn.**

2 Check theft deterrent horn.

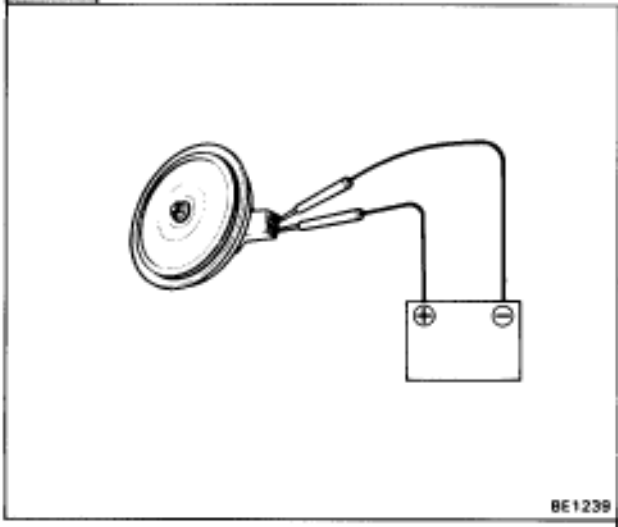

C Connect positive (+) lead to terminal 1 and negative (–) lead to terminal 2 of theft deterrent horn connector.

OK **Theft deterrent horn blows.**

OK

NG **Replace theft deterrent horn.**

3 Check harness and connector between theft deterrent and door lock ECU and theft deterrent horn (See page IN–30).

OK

NG **Check and repair harness or connector.**

Check and replace theft deterrent ECU.

Headlight Control Relay Circuit

CIRCUIT DESCRIPTION

When the theft deterrent system is activated, it causes the Tr in the ECU to switch on and off at approximately 0.2 sec. intervals. This switches the headlight control relay on and off, thus flashing the headlights (See the wiring diagram below).
In this condition, if any of the following operations is done, the Tr in the ECU goes off and the headlight control relay switches off, thus stopping the headlights flashing:

(1) The front LH or RH door is unlocked with a key.
(2) The ignition switch is turned to ACC or ON position.
(3) Approximately 1 minute elapses.

WIRING DIAGRAM

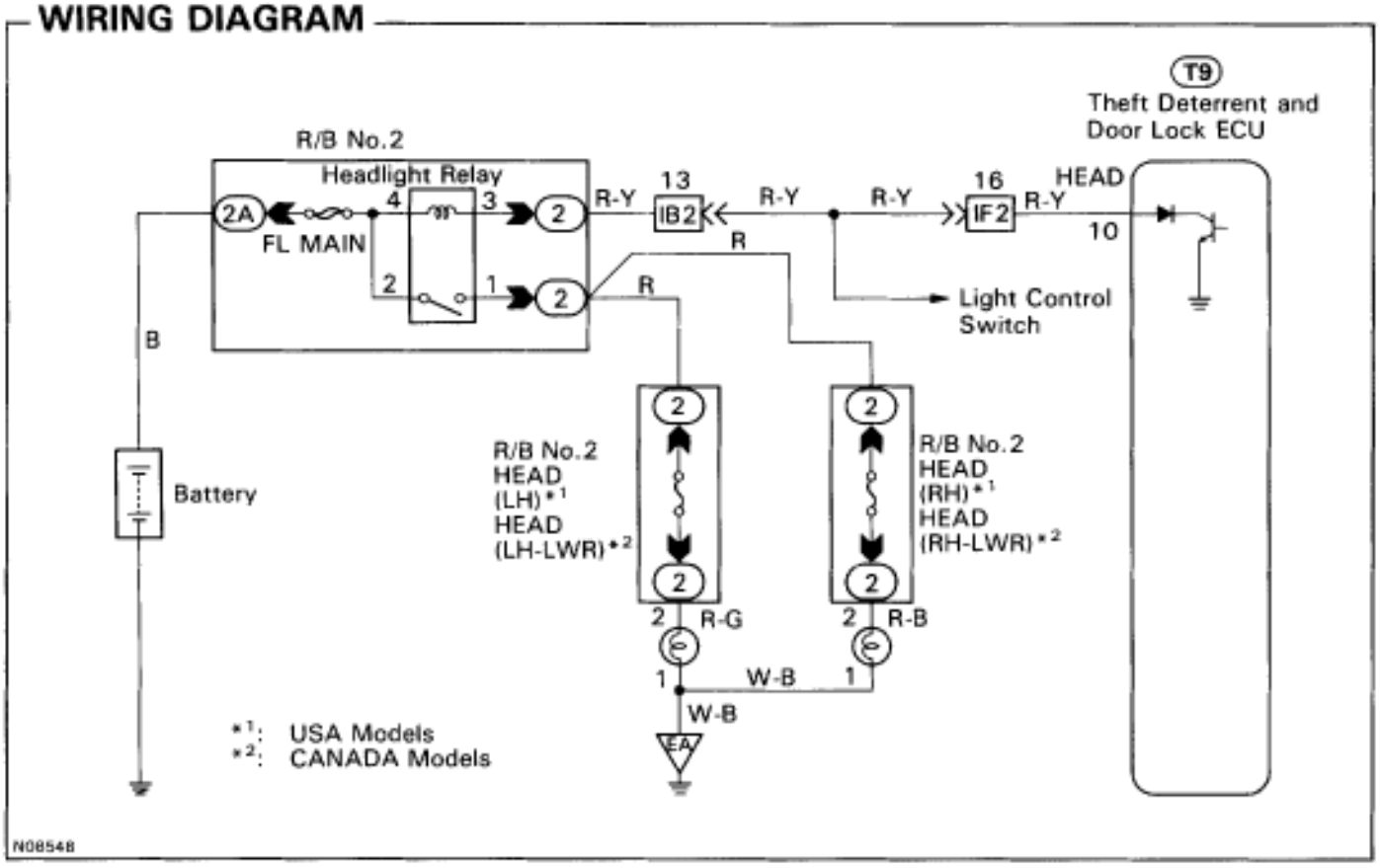

INSPECTION PROCEDURE

HINT: The flow chart below is based on the premise that the headlights light up normally whenever the light control switch is operated. If headlight operation is not normal when the light control switch is operated, proceed to troubleshooting on page BE–11.

1 Check voltage between terminal HEAD of theft deterrent and door lock ECU connector and body ground.

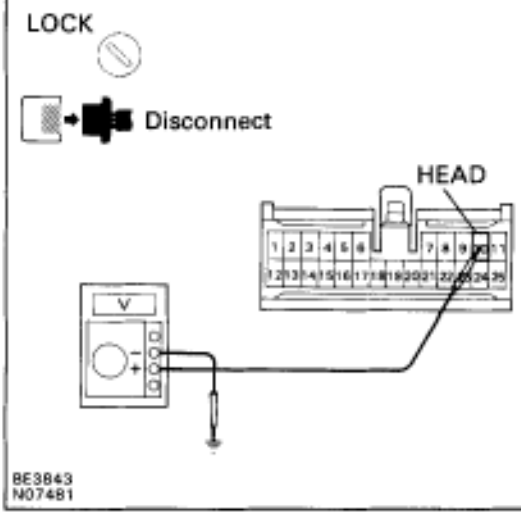

P (1) Remove instrument panel. (See BO section)

(2) Disconnect the ECU connector.

C Measure voltage between terminal HEAD of theft deterrent ECU connector and body ground.

OK **Voltage: 10 – 14 V**

NG → Check and repair harness and connector between theft deterrent and door lock ECU headlight control relay (See page IN–30).

OK → **Check and replace theft deterrent and door lock ECU.**

Taillight Control Relay Circuit

CIRCUIT DESCRIPTION

When the theft deterrent system is activated, it causes the Tr in the ECU to switch on and off at approximately 0.2 sec. intervals. This switches the taillight control relay on and off, thus flashing the taillights (See the wiring diagram below).

In this condition, if any of the following operations is done, the Tr in the ECU goes off and the taillight control relay switches off, thus stopping the taillights flashing:

(1) The front LH or RH door is unlocked with a key.
(2) The ignition switch is turned to ACC or ON position.
(3) Approximately 1 minute elapses.

WIRING DIAGRAM

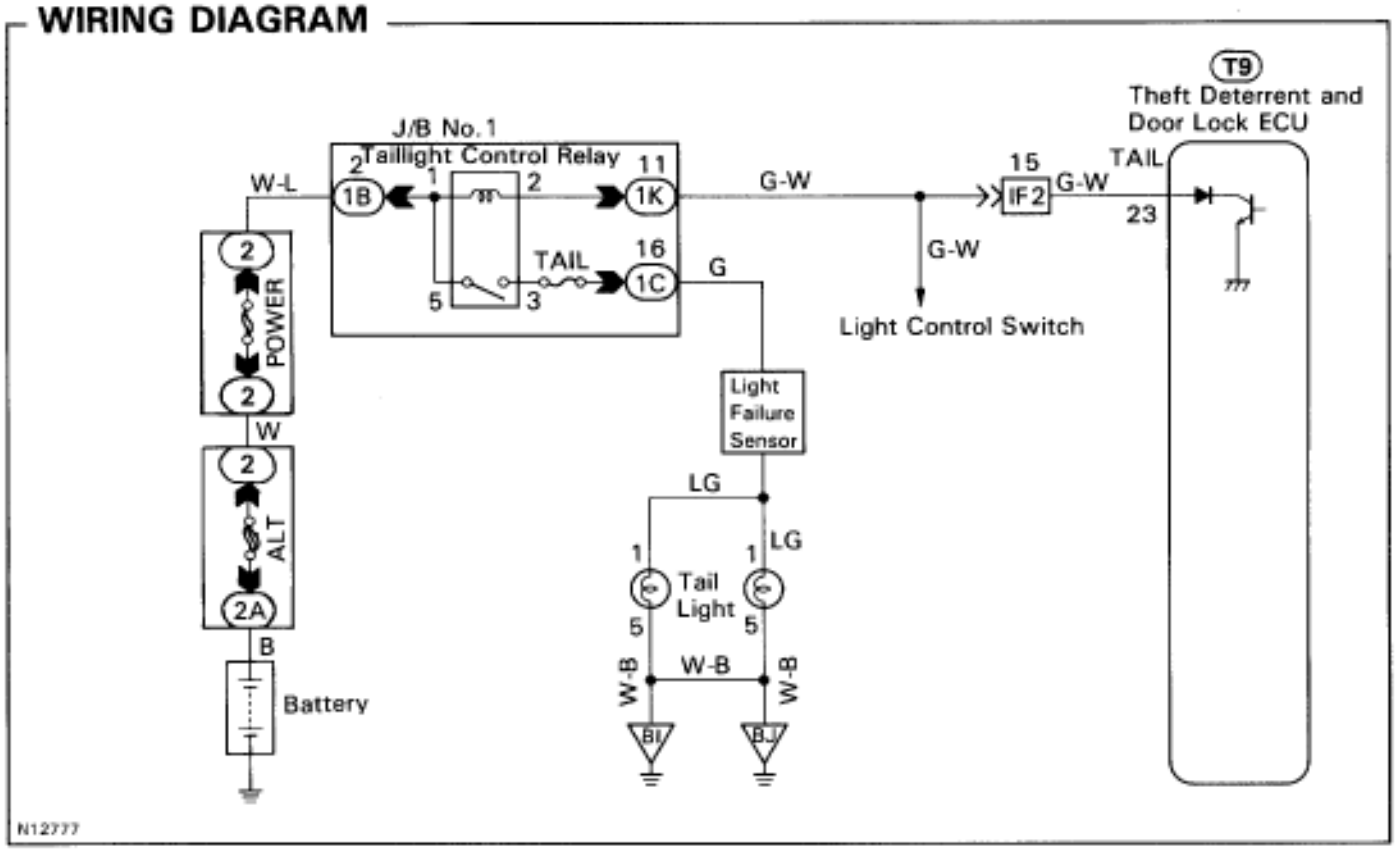

INSPECTION PROCEDURE

1 **Check voltage between terminal TAIL of theft deterrent door lock ECU connector and body ground.**

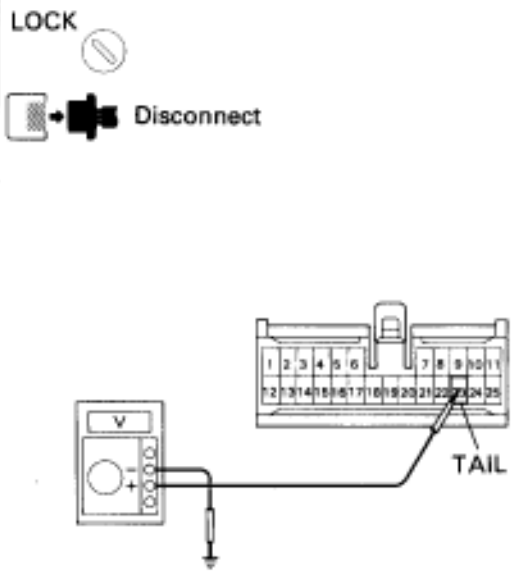

P (1) Remove instrument panel.
(See BO section)
(2) Disconnect the ECU connector.

C Measure voltage between terminal TAIL of theft deterrent and door lock ECU connector and body ground.

OK **Voltage: 10 – 14 V**

NG

OK → **Check and replace theft deterrent ECU.**

Check and repair harness and connector between theft deterrent and door lock ECU taillight control relay (See page IN–30).

Ignition Switch Circuit

CIRCUIT DESCRIPTION

When the ignition switch is turned to the ACC position, battery positive voltage is applied to the terminal ACC of the ECU. Also, if the ignition switch is turned to the ON position, battery voltage is applied to the terminals ACC and IG of the ECU. When the battery positive voltage is applied to the terminal ACC of the ECU while the theft deterrent system is activated, the warning stops. Furthermore, power supplied from the terminals ACC and IG of the ECU is used as power for the door courtesy switch, and position switch, etc.

WIRING DIAGRAM

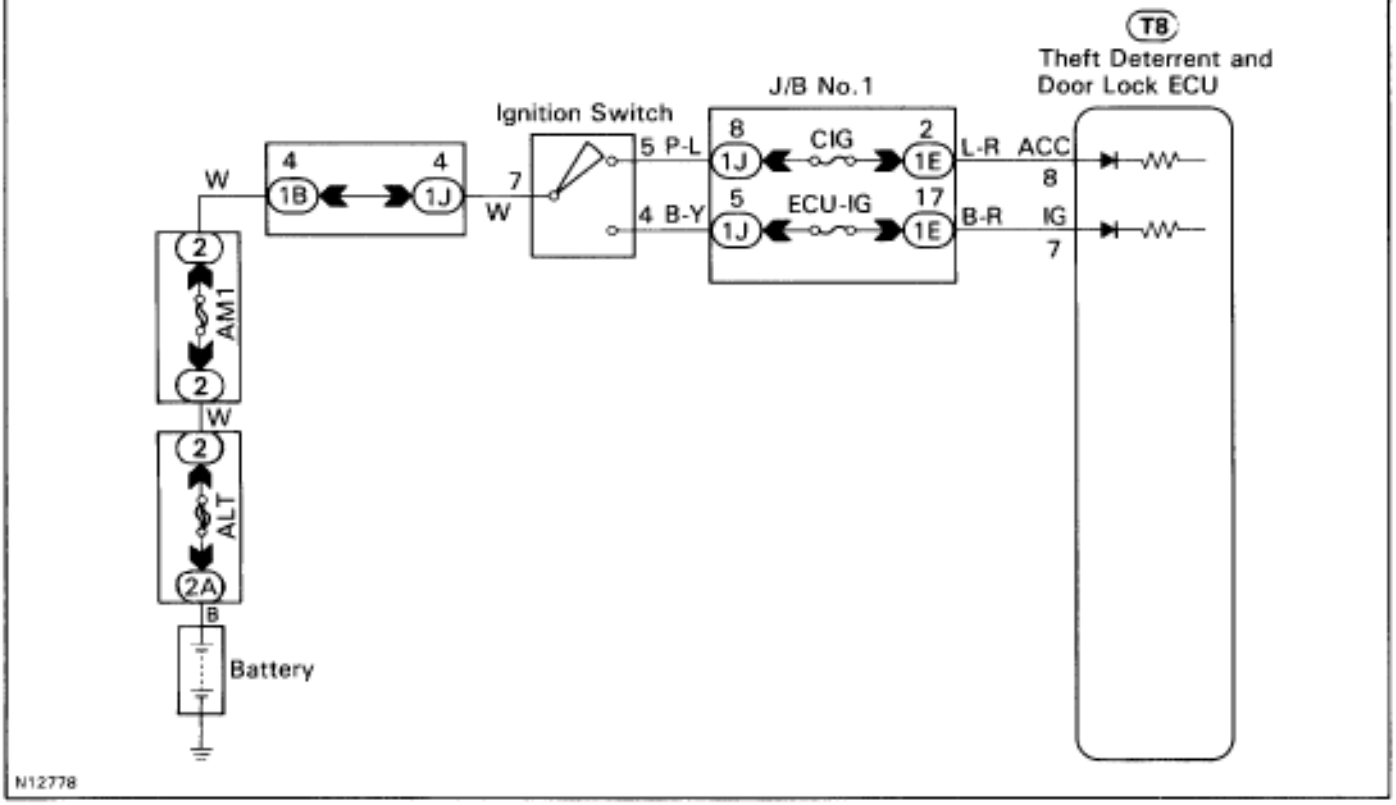

INSPECTION PROCEDURE

1 Check CIG and ECU–IG fuses.

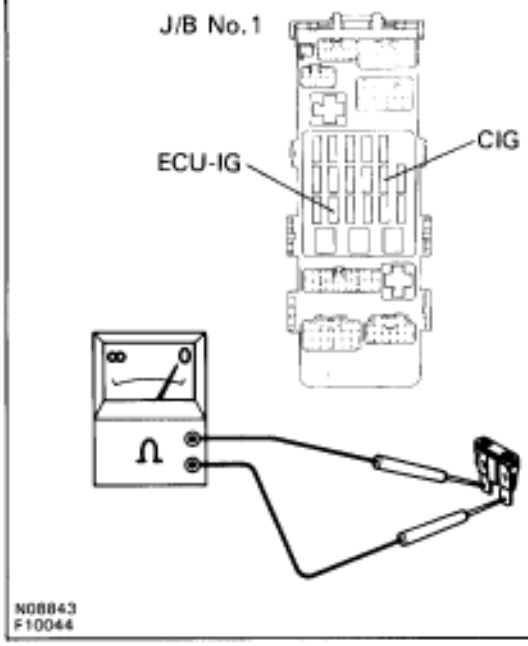

P Remove CIG and ECU–IG fuses from J/B NO. 1.

C Check continuity of CIG and ECU–IG fuses.

OK **Continuity**

OK

NG **Check for short in all the harness and components connected to the CIG and ECU–IG fuses (See attached wiring diagram).**

2 Check voltage between terminals IG and ACC of theft deterrent and door lock ECU and body ground.

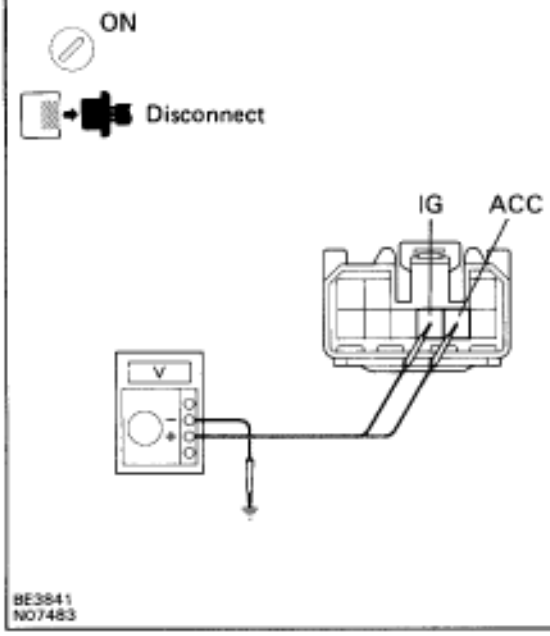

P (1) Remove instrument panel. (See BO section)
(2) Disconnect the ECU connector.
(3) Turn ignition switch ON.

C Measure voltage between terminal IG and ACC of theft deterrent ECU connector and body ground.

OK **Voltage: 10 – 14 V**

NG

OK **Check and replace theft deterrent and door lock ECU.**

Check and repair harness and connector between theft deterrent and door lock ECU and battery (See page IN–30).

Luggage Compartment Door Key Lock and Unlock Switch Circuit

CIRCUIT DESCRIPTION

The luggage compartment door key lock and unlock switch goes on when the back door key cylinder is turned to the unlock side with the key.

WIRING DIAGRAM

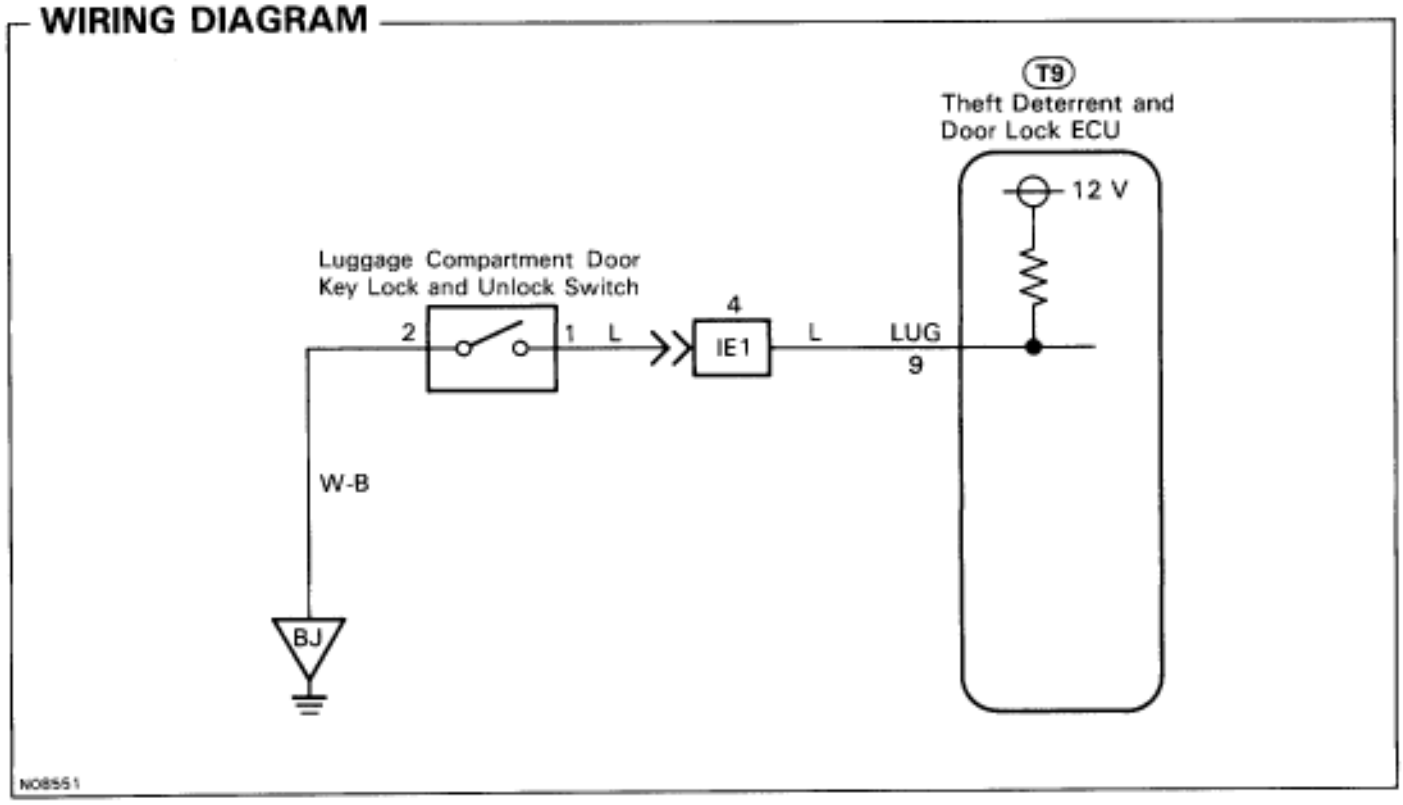

INSPECTION PROCEDURE

1 Check voltage between terminal 1 of luggage compartment door key lock and unlock switch connector and body ground.

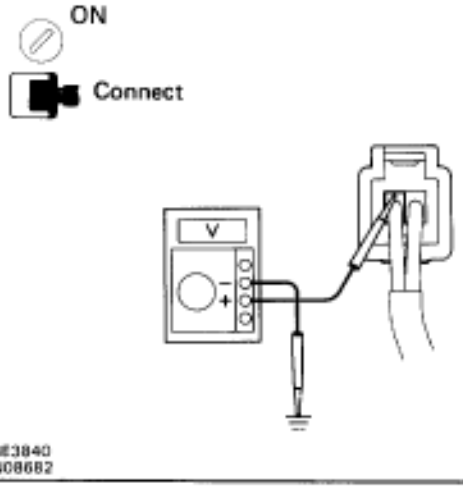

P
(1) Remove deck trim rear cover.
(2) Turn ignition switch ON.

C
Measure voltage between terminal 1 of luggage compartment door key lock and unlock switch connector and body ground, when the key si turned to the unlock side and not turned.

OK

Key operation	Voltage
Turned to the unlock side.	0 V
Not turned	Battery positive voltage

NG

OK → **Check and replace theft deterrent and door lock ECU. *1.**

2 Check luggage compartment door key lock and unlock switch.

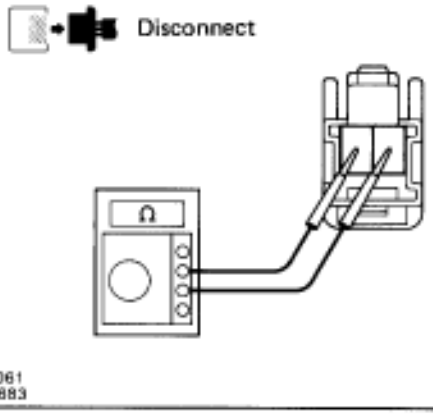

P
Disconnect luggage compartment door key lock and unlock switch connector.

C
Check continuity between terminals 1 and 2, when the key si turned to the unlock side and not turned.

OK

Continuity

Key operation	1	2
Turned to the unlock side.	○	○
Not turned		

OK

NG → Repair or replace luggage compartment door key lock and unlock switch.

3 Check harness and connector between theft deterrent and door lock ECU and key unlock switch, key unlock switch and body ground (See page IN–30).

OK

NG → **Repair or replace harness or connector.**

Check and replace theft deterrent and door lock ECU.

*1: When there is a malfunction that the theft deterrent system cannot be set, proceed to the next numbered circuit inspection shown on the matrix chart (See page Be–123).

Luggage Compartment Door Courtesy Switch Circuit

CIRCUIT DESCRIPTION

The luggage compartment door courtesy switch goes on when the back door is opened and goes off when the back door is closed.

WIRING DIAGRAM

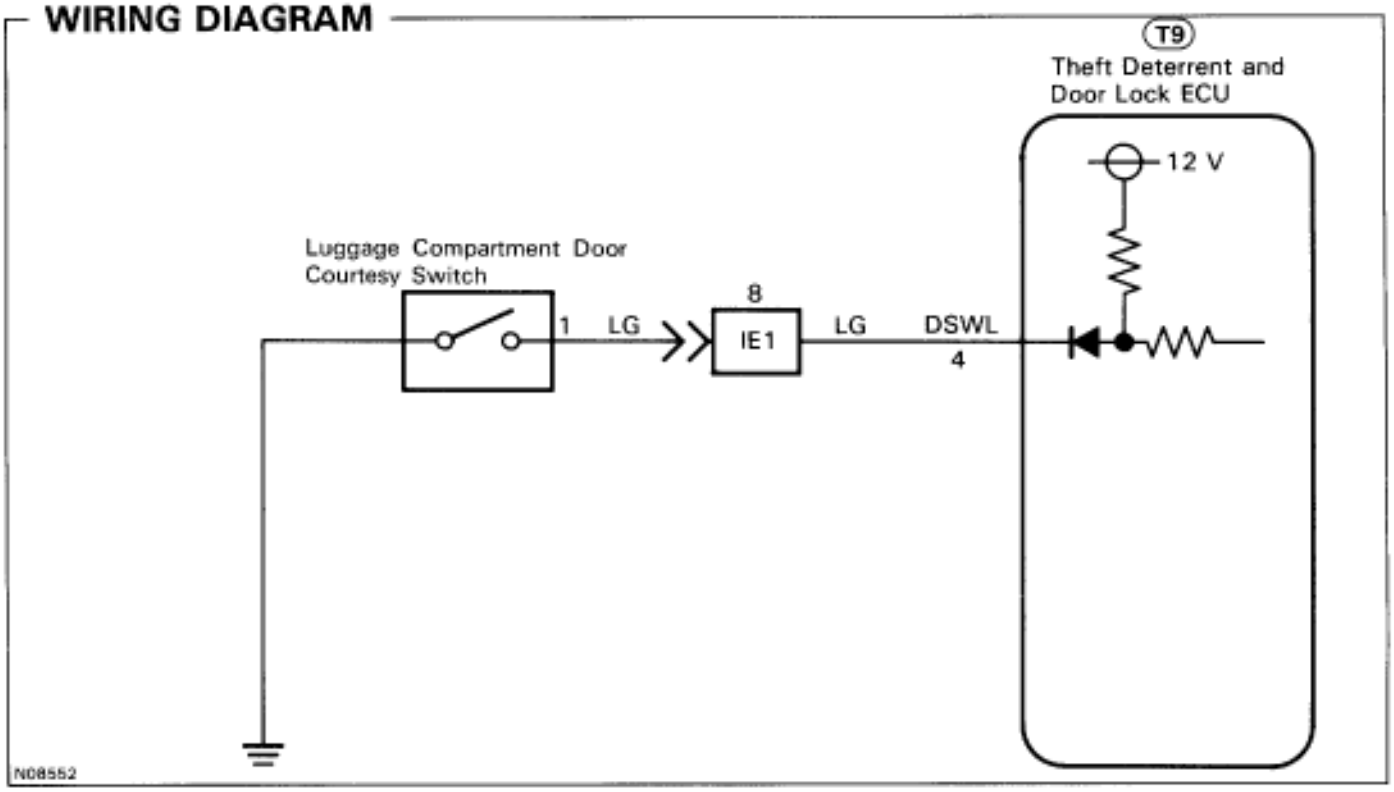

INSPECTION PROCEDURE

1 **Check operation of luggage room light.**

C Check that luggage room light goes off when luggage room light switch is pushed, and comes on when switch is not pushed.

OK

NG → **Check and repair luggage compartment door courtesy light circuit (See page BE–28).**

2 **Check for open in harness and connector between theft deterrent and door lock ECU and luggage compartment door courtesy switch (See page IN–30).**

OK

NG → **Repair or replace harness or connectors.**

Check and replace theft deterrent ECU. *1.

*1: When there is a malfunction that the theft deterrent system cannot be set, proceed to the next numbered circuit inspection shown on matrix chart (See page BE–123).

Door Unlock Detection Switch Circuit

CIRCUIT DESCRIPTION

The door unlock detection switch goes off when the door lock knob is operated to the lock position, and comes on when the door lock knob is operated to the unlock position.

WIRING DIAGRAM

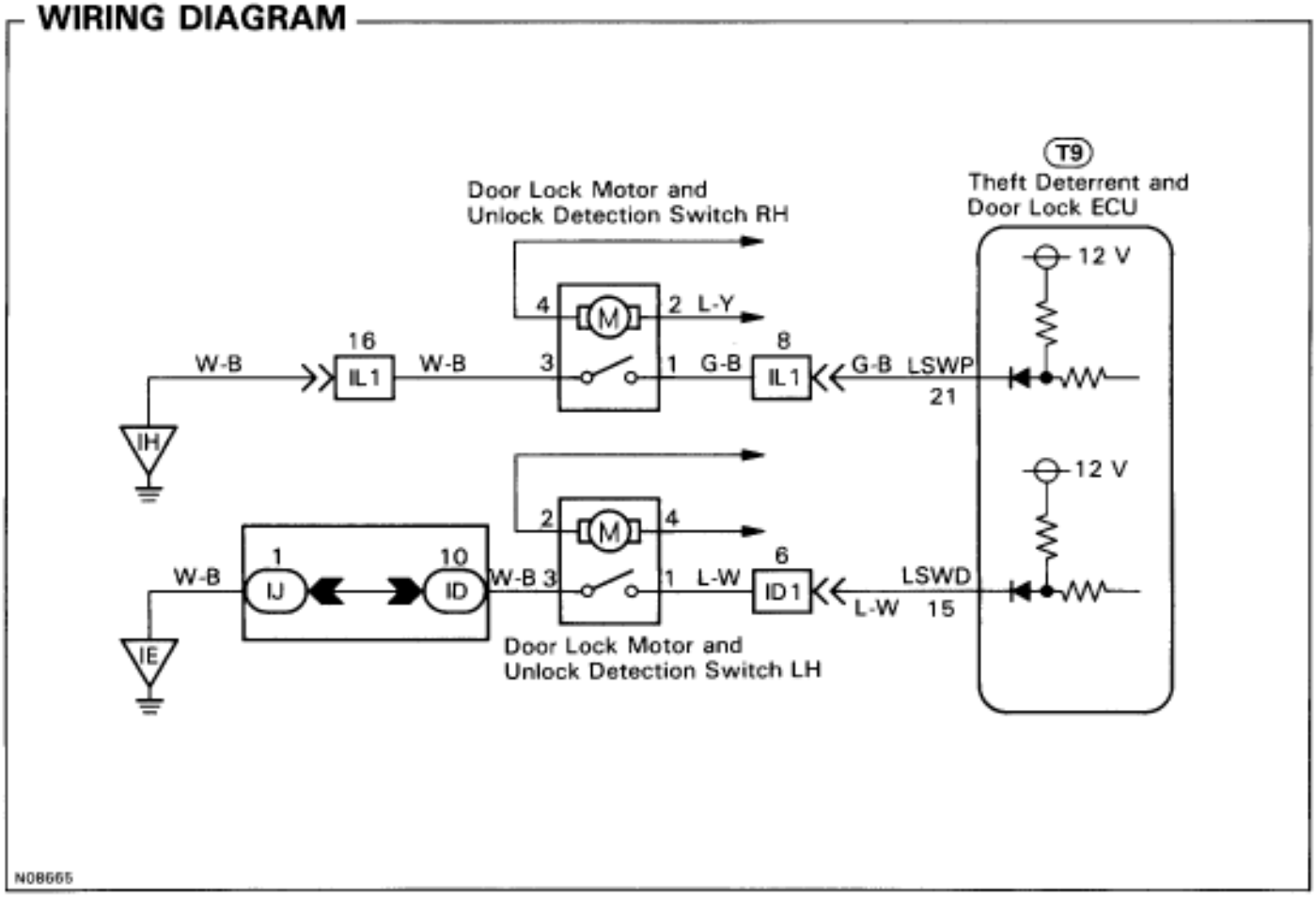

INSPECTION PROCEDURE

1 Check door unlock detection switch.

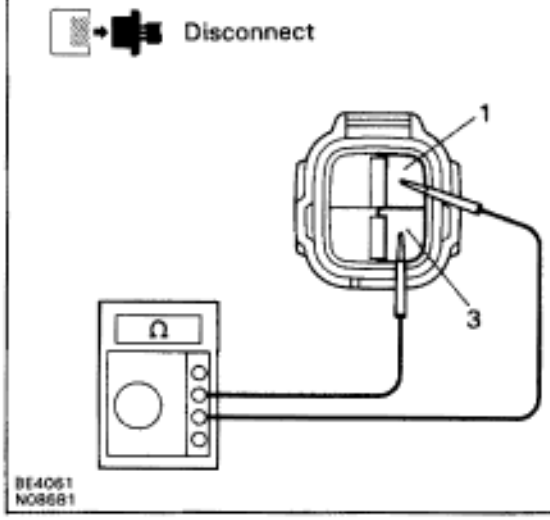

P
(1) Remove the door trim.
(2) Disconnect door lock motor and door unlock detection switch connector.

C Check continuity between terminals 1 and 3 of door unlock detection switch connector, when door lock knob is operated to the lock side and to the unlock side.

OK

Continuity

Switch condition \ Terminal	1	3
Door unlock	○—○	
Door lock		

OK

NG **Replace door unlock detection switch.**

2 Check harness and connector between theft deterrent and door lock ECU and door unlock detection switch, door unlock detection switch and body ground (See page IN–30).

OK

NG **Repair or replace harness or connector.**

Check and replace theft deterrent and door lock ECU. *1.

*1: When there is a malfunction that the theft deterrent system cannot be set, proceed to the next numbered circuit inspection shown on matrix chart (See page BE–123).

Door Courtesy Switch Circuit

CIRCUIT DESCRIPTION

The door courtesy switch goes on when the door is opened and goes off when the door is closed.

WIRING DIAGRAM

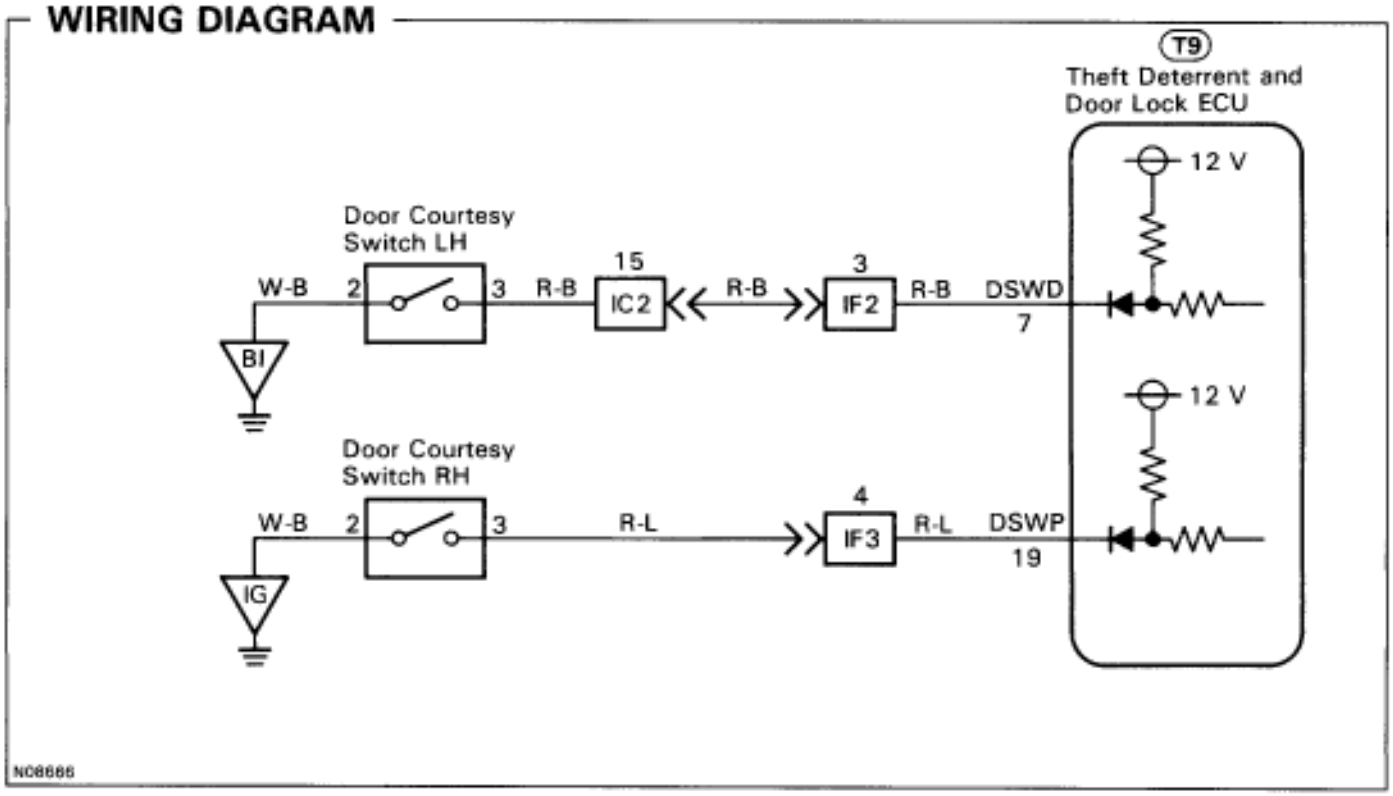

INSPECTION PROCEDURE

1 **Check operation of open door warning light.**

C Check that open door warning light comes on when each door is opened, and goes off when all doors are closed.

OK

NG → **Check and repair open door warning light circuit**

2 **Check for open in harness and connector between theft deterrent and door lock ECU and door courtesy switch (See page IN–30).**

NG

Repair or replace harness or connector.

OK → **Check and replace theft deterrent ECU. *1.**

*1: When there is a malfunction that the theft deterrent system cannot be set, proceed to the next numbered circuit inspection shown on matrix chart (See page BE–123).

Engine Hood Courtesy Switch Circuit

CIRCUIT DESCRIPTION

The engine hood courtesy switch is built into the engine hood lock assembly and goes on when the engine hood is opened and goes off when the engine hood is closed.

WIRING DIAGRAM

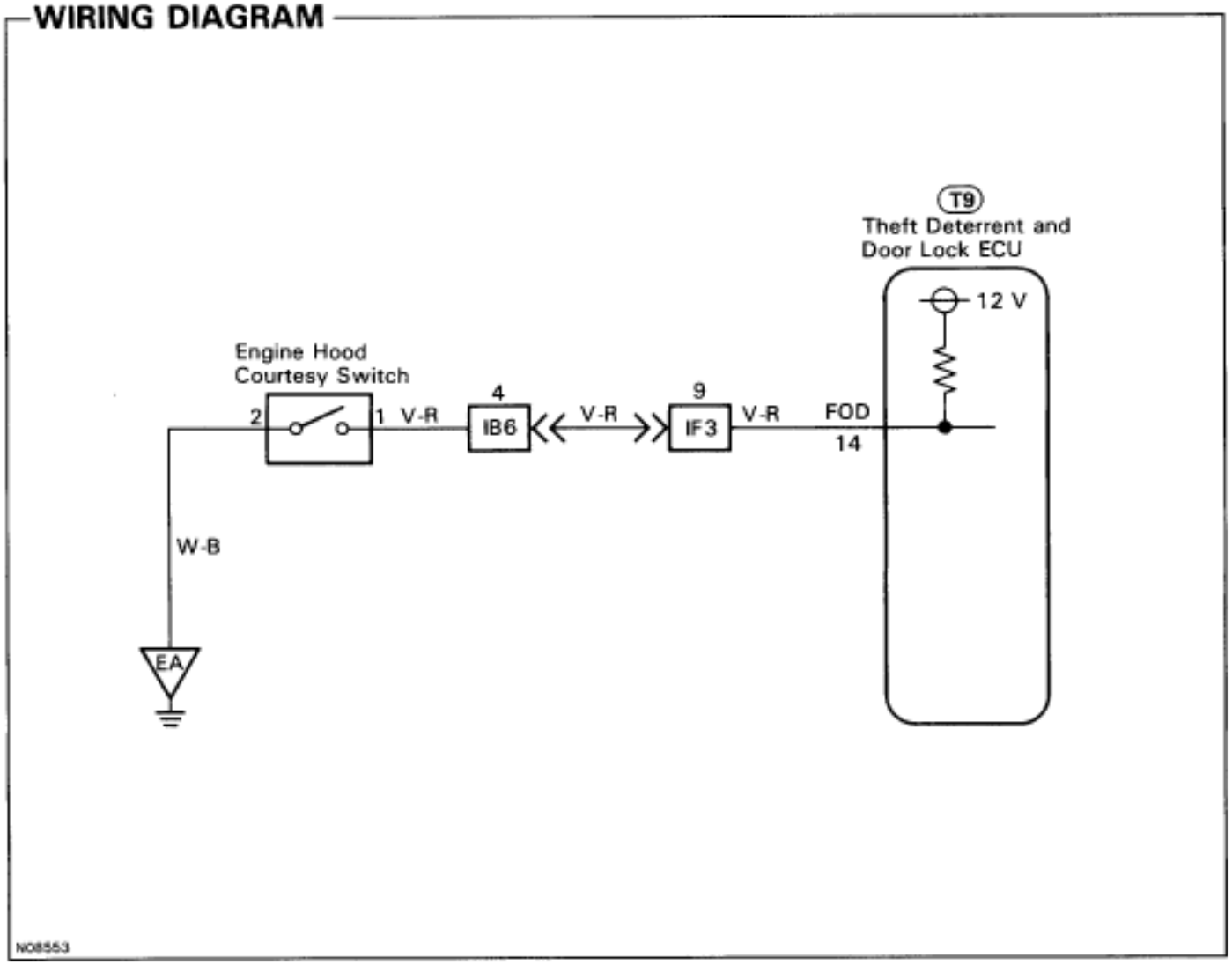

INSPECTION PROCEDURE

1 **Check engine hood courtesy switch.**



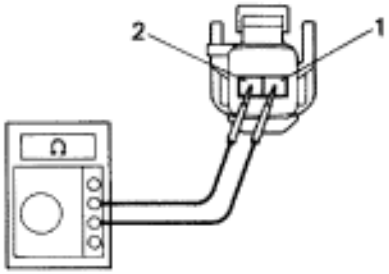

BE4061
NDB684

P (1) Remove engine hood lock assembly.
(2) Disconnect engine hood courtesy switch connector.

C Check continuity between terminals 1 and 2 when engine hood lock is locked and unlocked.

OK

Continuity

Engine hood lock \ Terminal	1	2
Lock		
Unlock	○—○	

OK → **2** **Check harness and connector between theft deterrent and door lock ECU and switch and body ground (See page IN–30).**

NG → **Replace engine hood courtesy switch.**

OK → Check and replace theft deterrent and door lock ECU (See page IN–30).

NG → **Repair or replace harness or connector.**

CIRCUIT INSPECTION

ECU Power Source–Circuit

CIRCUIT DESCRIPTION

This circuit provides power to operate the theft deterrent and door lock ECU.

WIRING DIAGRAM

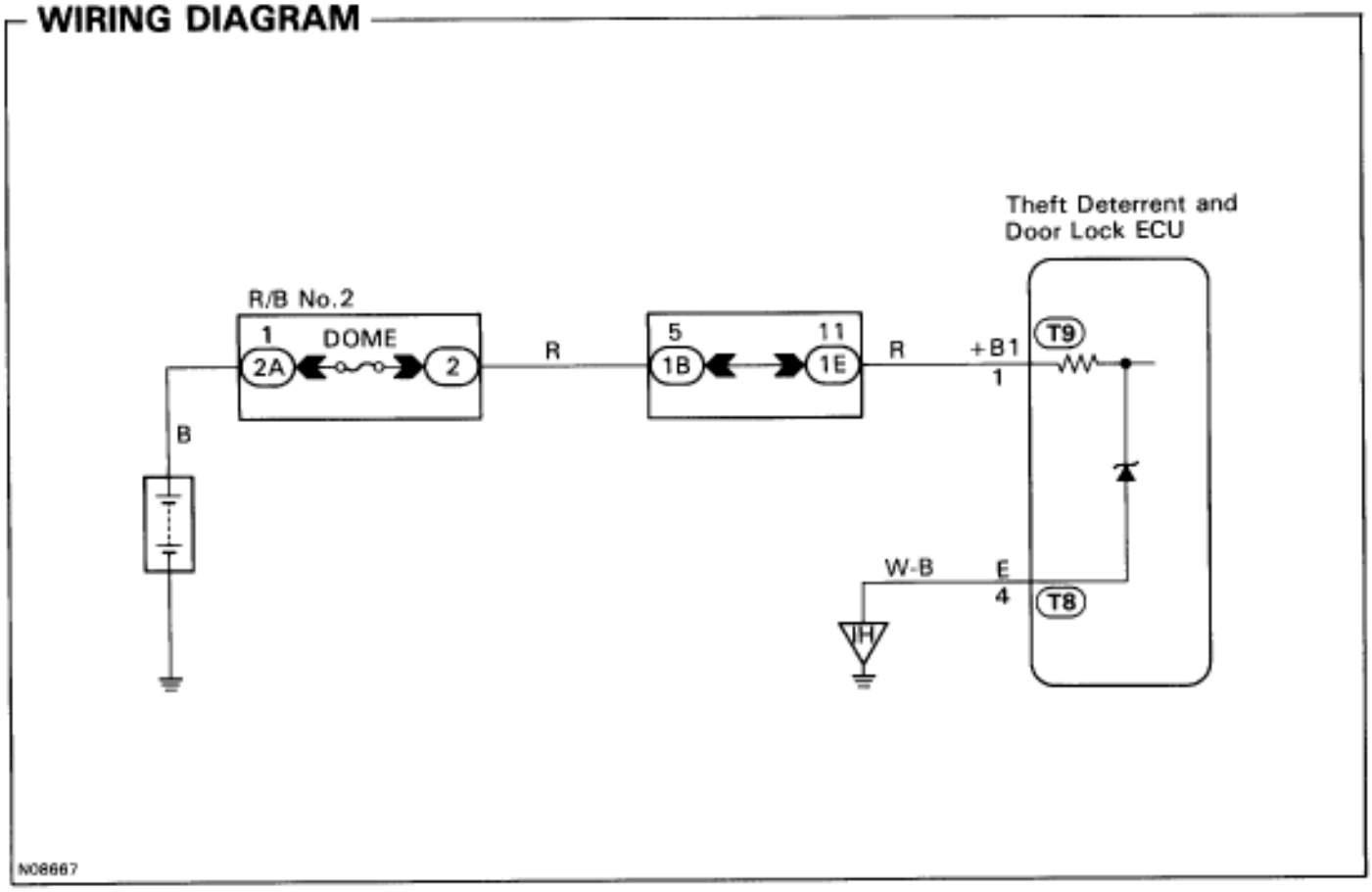

INSPECTION PROCEDURES

1 Check DOME fuse.

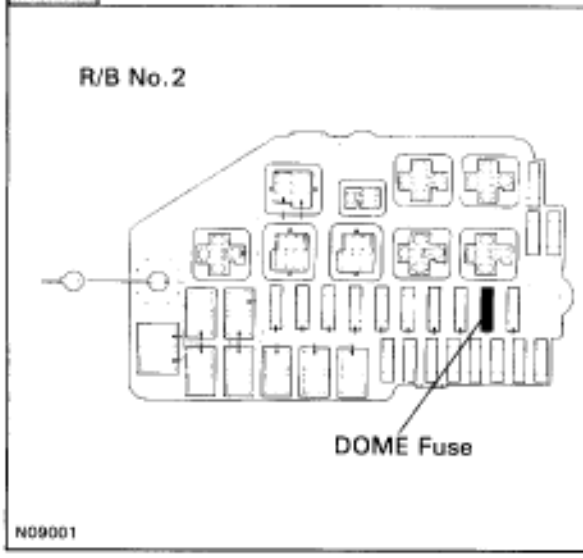

P Remove DOME fuse from R/B No. 2

C Check continuity of DOME fuse.

OK **Continuity**

OK

NG **Check for short in all the harness and components connected to the DOME fuse (See attached wiring diagram).**

2 Check voltage between terminals +B1 and E of ECU connector.

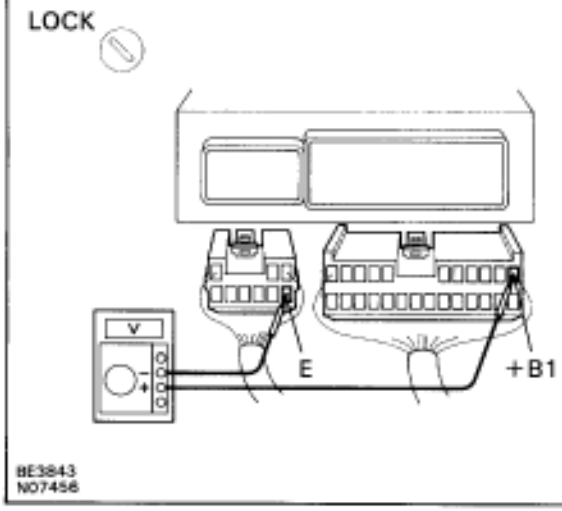

P (1) Remove the No. 1 under cover and heater duct.
(2) Disconnect the theft deterrent and door lock ECU connector.

C Measure voltage between terminals +B1 and E of ECU connector.

OK **Voltage: 10 – 14 V**

NG

OK **Proceed to next circuit inspection shown on matrix chart (See page BE–123).**

3 Check for open in harness and connector between ECU and body ground (See page IN–30).

OK

NG **Repair or replace harness or connector.**

Check and repair harness and connector between ECU and battery.

Actuator Power Source Circuit

CIRCUIT DESCRIPTION

This circuit provides power to drive the door lock motor.

WIRING DIAGRAM

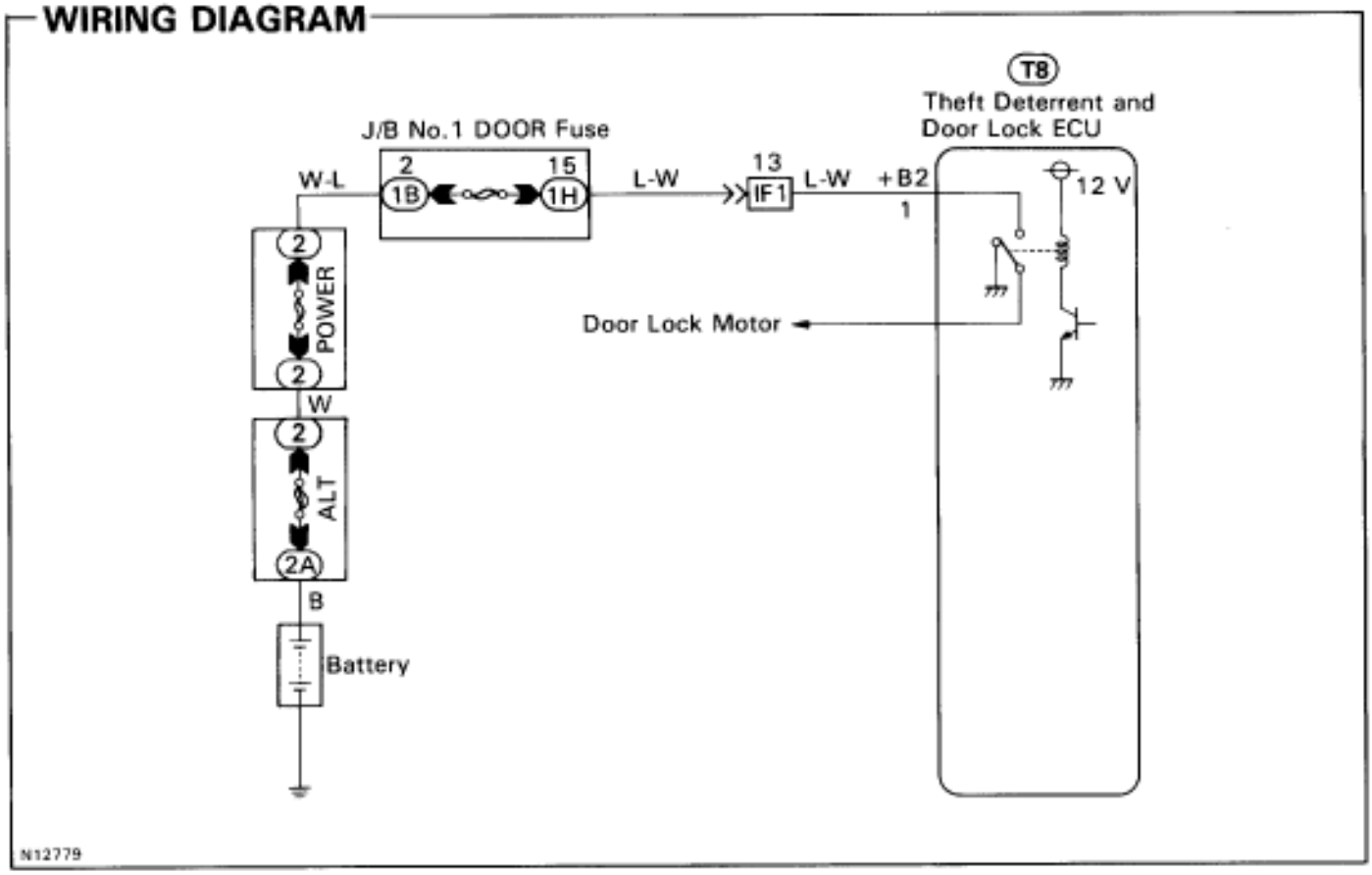

INSPECTION PROCEDURES

1 Check POWER M–fuse.

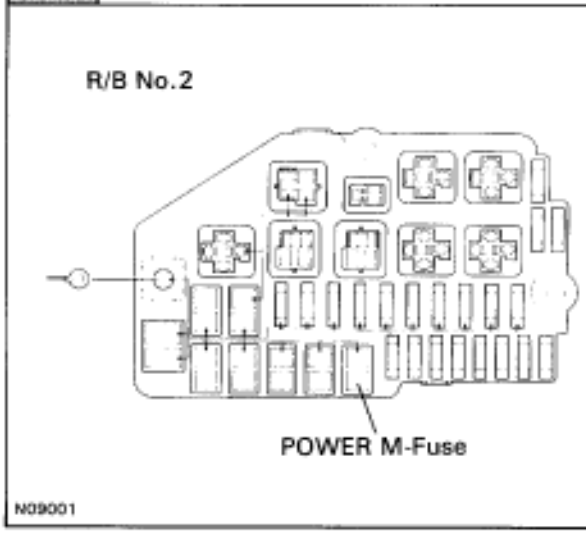

P Remove POWER M fuse from R/B No. 2

C Check continuity of POWER M–fuse.

OK **Continuity**

OK

NG **Check for short in all the harness and components connected to the DOOR fusible link (See attached wiring diagram). *1**

2 Check voltage between terminals +B2 of ECU connector and body ground.

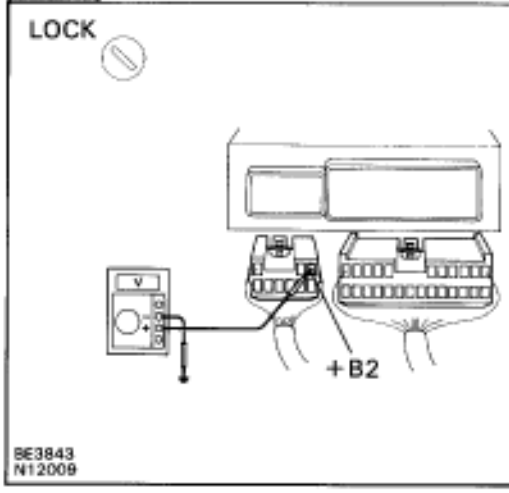

P (1) Remove the instrument panel.
See BO section.

(2) Disconnect the ECU connector.

C Measure voltage between terminals +B2 of ECU connector and body ground.

OK **Voltage: 10 – 14 V**

NG

OK **Proceed to next circuit inspection shown on matrix chart (See page BE–123).**

Check and repair harness and connectors between ECU and battery (See page IN–30).

*1: The power source is supplied to the actuator (door lock motor, through the theft deterrent and door lock ECU. Accordingly, if a short circuit of the W/H or actuator occurs in the actuator circuit the POWER M–Fuse may become OPEN, so also inspect the actuator (door lock motor circuit on page BE–154).

Door Lock Motor Circuit

CIRCUIT DESCRIPTION

This door lock motor locks and unlocks the door according to signals from the ECU.

WIRING DIAGRAM

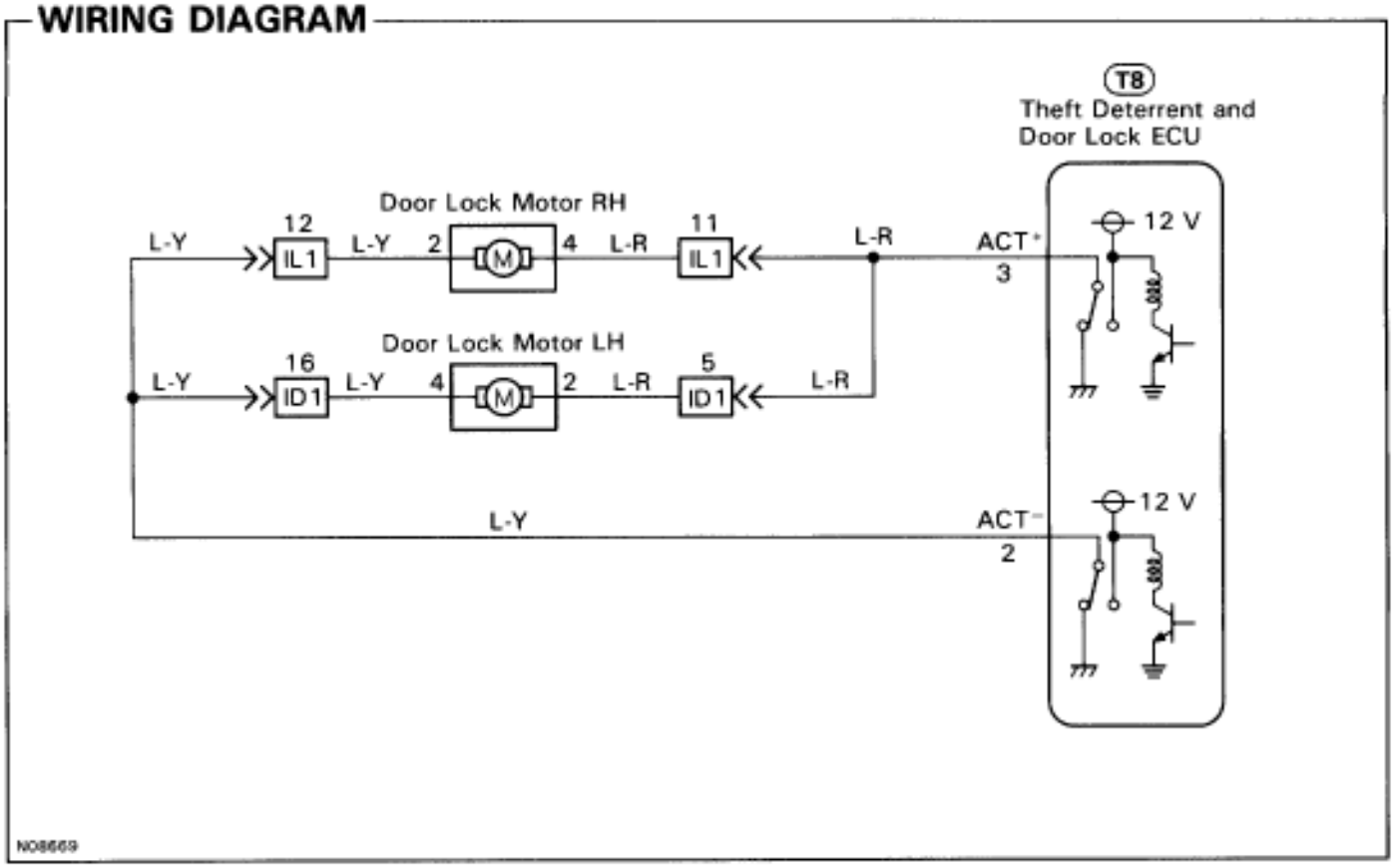

INSPECTION PROCEDURES

1 **Check operating sound of door lock motor.**

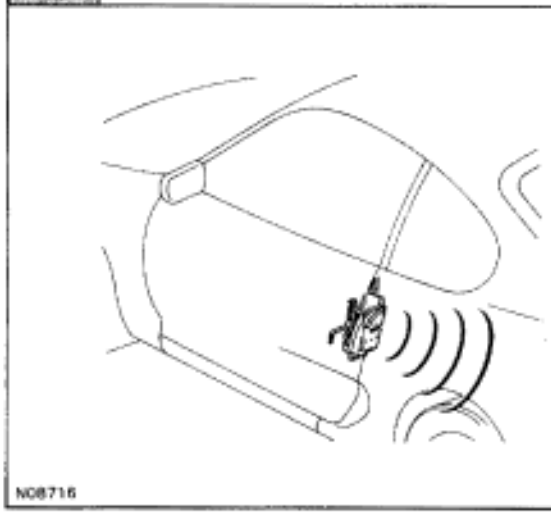

C Check operating sound of door lock motor, when door lock control switch is pushed to the lock side and unlock side.

OK **Can hear operating sound of door lock motor.**

Hint Inspect the door which is malfunctioning.

NG

OK 〉 **Repair or replace door lock control link.**

2 **Check door lock motor.**

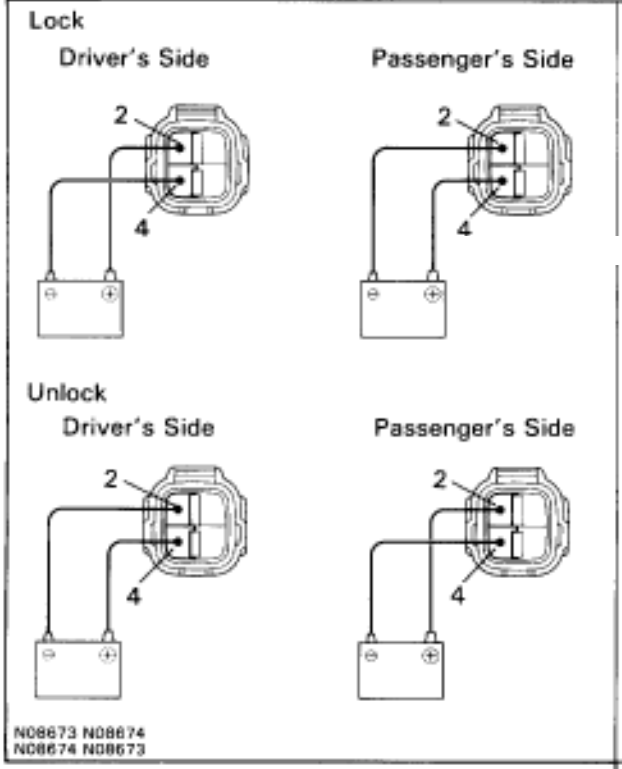

P (1) Remove the door trim and service hole cover..
(2) Disconnect the door lock motor connector.

C (1) Connect positive (+) lead to terminal 2(4) and negative (–) lead to terminal 2(4) of door lock motor connector.
(2) Connect positive (+) lead to terminal 4(2) and negative (–) lead to terminal 2(4) of door lock motor connector.
( ) Passenger's Side

OK **(1) Door lock motor locks door.**
(2) Door lock motor unlocks door.

Hint This inspection must be carried out within 2 seconds.

NG → **Go to step 3.**

OK → **Replace door lock motor.**

3 **Check harness and connectors between ECU and door lock motor (See page IN–30).**

NG → **Repair or replace harness or connector.**

OK → **Proceed to next circuit inspection shown on matrix chart (See page BE–123).**

Door Lock Control Switch Circuit

CIRCUIT DESCRIPTION

When the door lock control switch is pushed to the lock side, Lock terminal of the switch is grounded, and when the switch is pushed to the unlock side, Unlock terminal is grounded (See wiring diagram below).

WIRING DIAGRAM

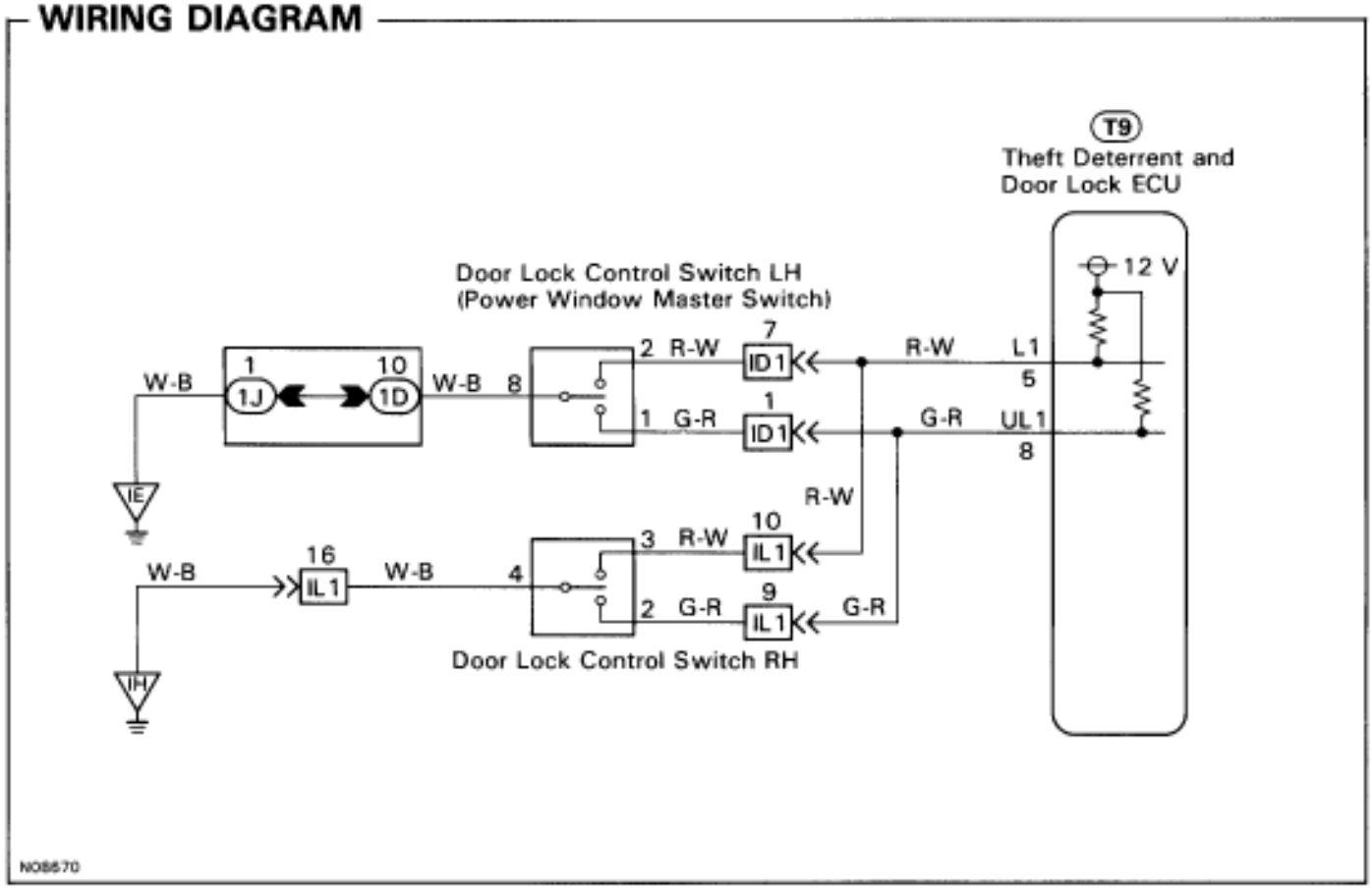

INSPECTION PROCEDURE

1 Check voltage between terminals 2(3), 1(1) of door lock control switch connector and body ground.

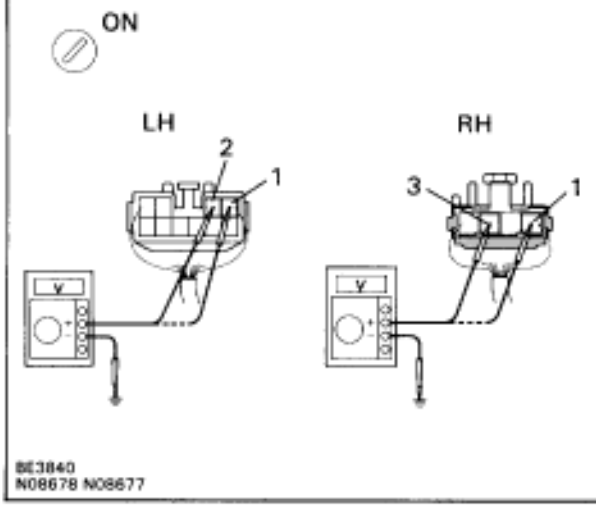

P Remove the door trim.

C (1) Turn ignition switch ON.

(2) Measure voltage between terminals 2(3), 1(1) of door lock control switch connector and body ground, when door lock control switch is pressed to the lock side, unlock side and OFF position.

OK

Switch position \ Terminal	2(3)	1(1)
Lock side	Below 1 V	8 – 10 V
Unlock side	8 – 10 V	Below 1 V
OFF	8 – 10 V	8 – 10 V

Hint **The terminal number without brackets is for the LH, the number with brackets is for the RH.**

NG

OK → **Proceed to next circuit inspection shown on matrix chart (See page BE–123).**

2 Check door lock control switch.

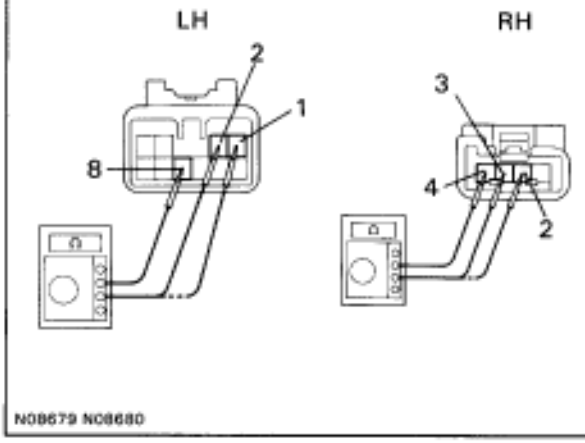

P Disconnect the door lock control switch connector.

C Check continuity between terminals 2(3), 1(2), 8(4) of door lock control switch connector, when door lock control switch is pressed to the lock side, and unlock side and OFF position.

Continuity

OK

Switch position \ Terminal	2(3)	1(2)	8(4)
Lock side	○		○
Unlock side		○	○
OFF			

Hint **The terminal number without brackets is for the LH, the number with brackets is for the RH.**

OK

NG → **Replace door lock control switch.**

3 Check harness and connectors between ECU and door lock control switch, switch and body ground (See page IN–30).

OK

NG → **Repair or replace harness or connector.**

Check and replace ECU *1

*1: Malfunction of the ECU can be considered possible only when the problem symptom follows:

- Lock and/or unlock using the Door Lock Control Switch cannot be done, neither on the driver's side nor on the passenger's side.

Door Key Lock and Unlock Switch Circuit

CIRCUIT DESCRIPTION

The door key lock and unlock switch is built in the door key cylinder.
When the key is turned to the lock side, terminal 3 of the switch is grounded and when the key is turned to the unlock side, terminal 1 of the switch is grounded.

WIRING DIAGRAM

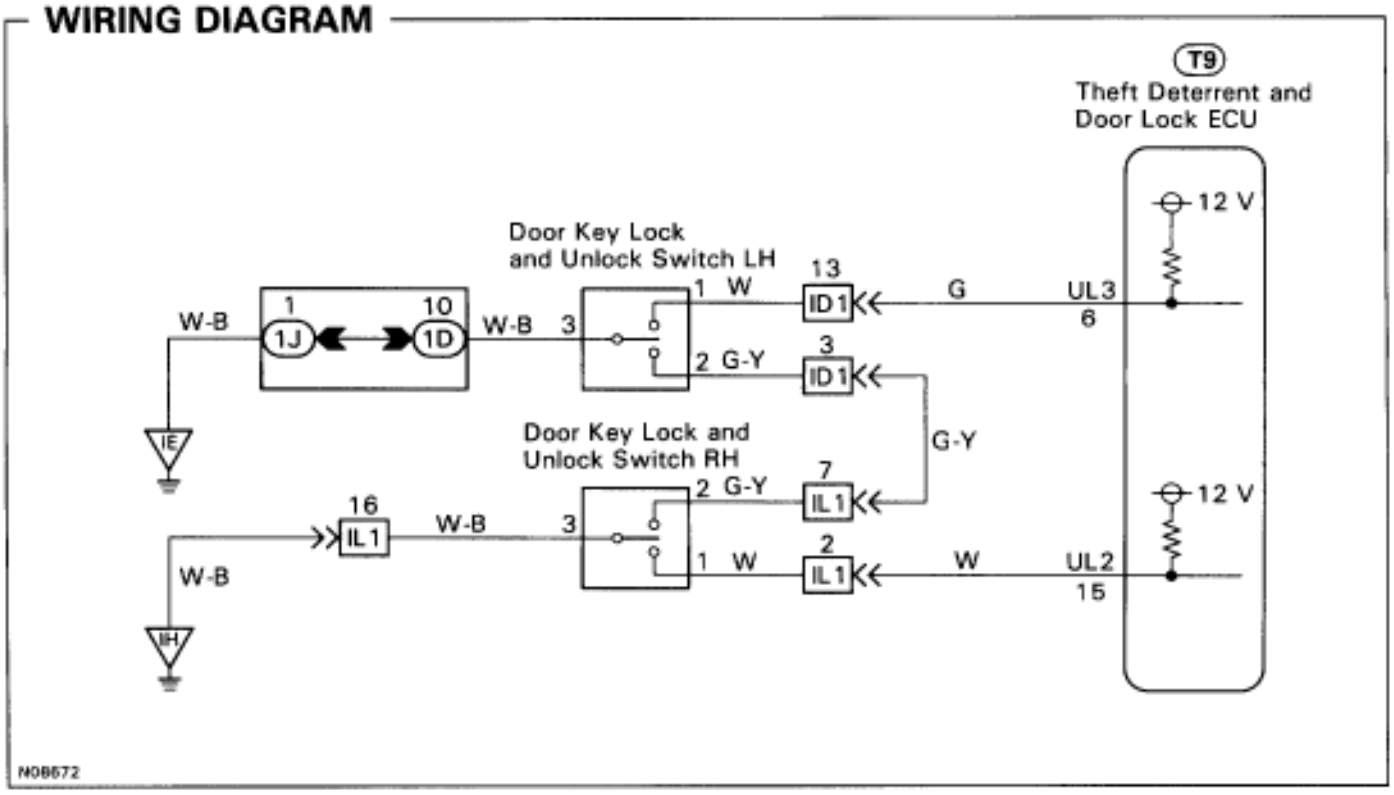

INSPECTION PROCEDURE

1 **Check door key lock and unlock switch.**

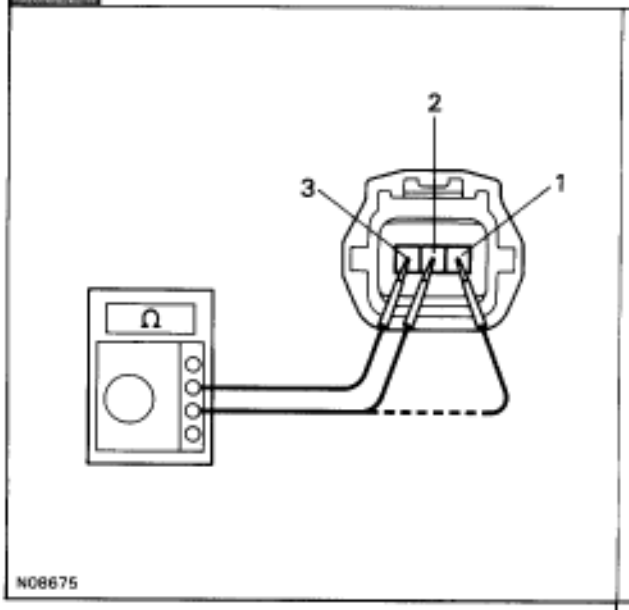

P (1) Remove the door trim and service hole cover.
(2) Disconnect the door key lock and unlock switch connector.

C Check continuity between terminals 1, 2 and 3 of door key lock and unlock switch connector, when door key lock and unlock switch is turned to the lock side, unlock side and not turned.

OK

Continuity

Switch position \ Terminal	1	2	3
Lock side		○—○	○—○
Unlock side	○—○		○—○
OFF			

OK → **2** **Check harness and connectors between ECU and switch, switch and body ground (See page IN–30).**

NG → **Replace door key lock and unlock switch.**

OK → **Proceed to next circuit inspection shown on matrix chart (See page BE–123).**

NG → **Repair or replace harness or connector.**

Key Unlock Warning Switch Circuit

CIRCUIT DESCRIPTION

The key unlock warning switch goes on when the ignition key is inserted in the key cylinder and goes off when the ignition key is removed.
The ECU operates the key confinement prevention function while the key unlock warning switch is on.

WIRING DIAGRAM

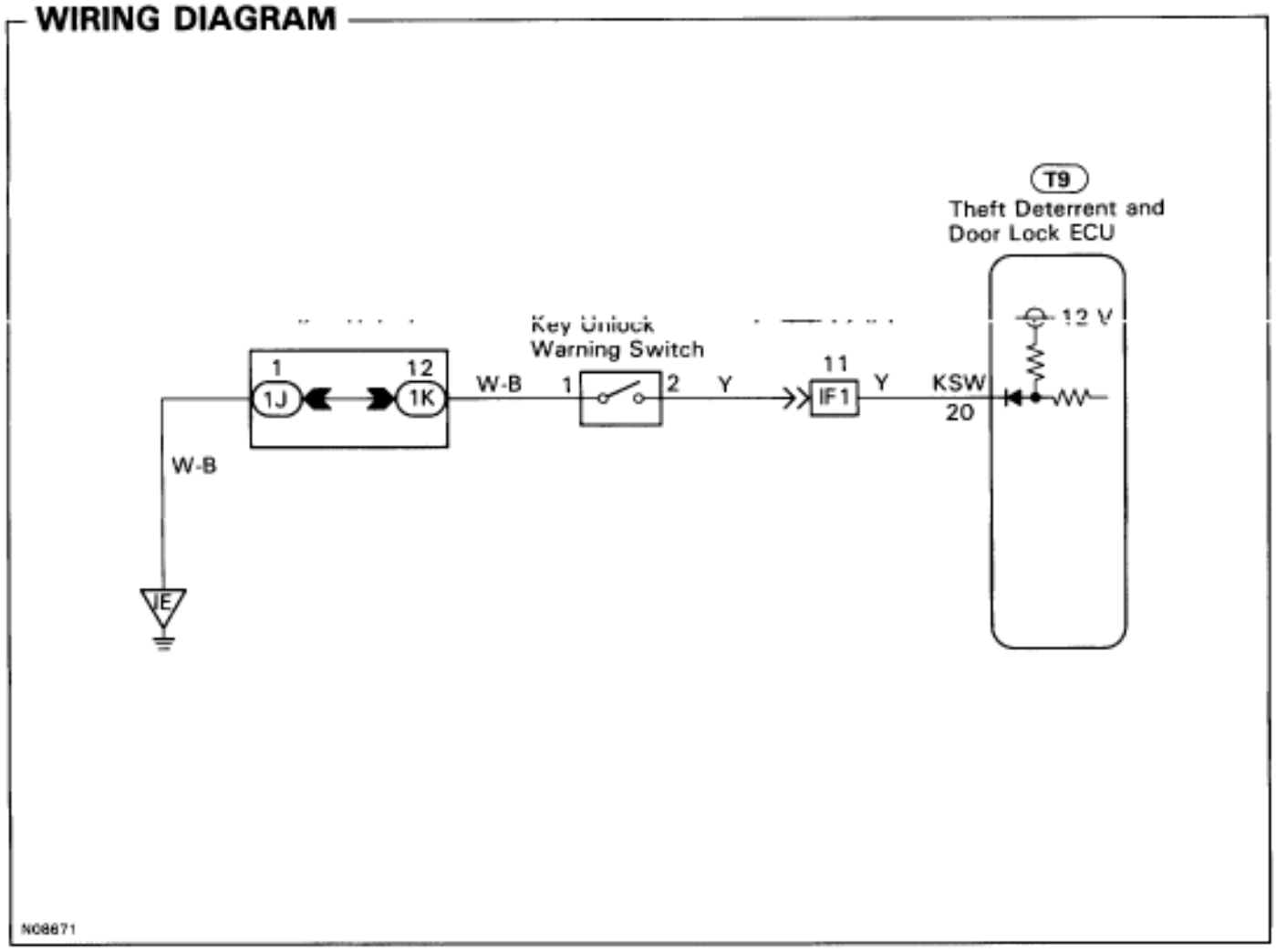

INSPECTION PROCEDURE

1 **Check key unlock warning switch.**

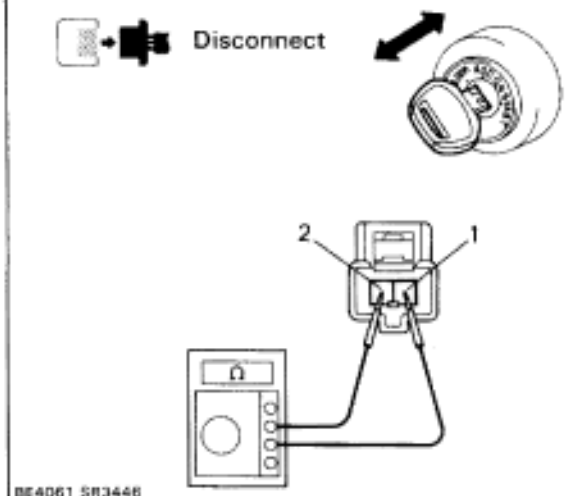

P Disconnect key unlock warning switch connector.

C Check continuity between terminals 1 and 2 of key unlock warning switch connector, when the key is inserted to the key cylinder or removed.

OK

Continuity

Switch position \ Terminal	1	2
ON (Key inserted)	○—○	
OFF (Key inserted)		

OK → **2** **Check harness and connectors between ECU and key unlock warning switch, key unlock warning switch and body ground (See page IN–30).**

OK → **Proceed to next circuit inspection shown on matrix chart (See page BE–123).**

NG → **Replace key unlock warning switch.**

NG → **Repair or replace harness or connector.**

CRUISE CONTROL SYSTEM

PARTS LOCATION

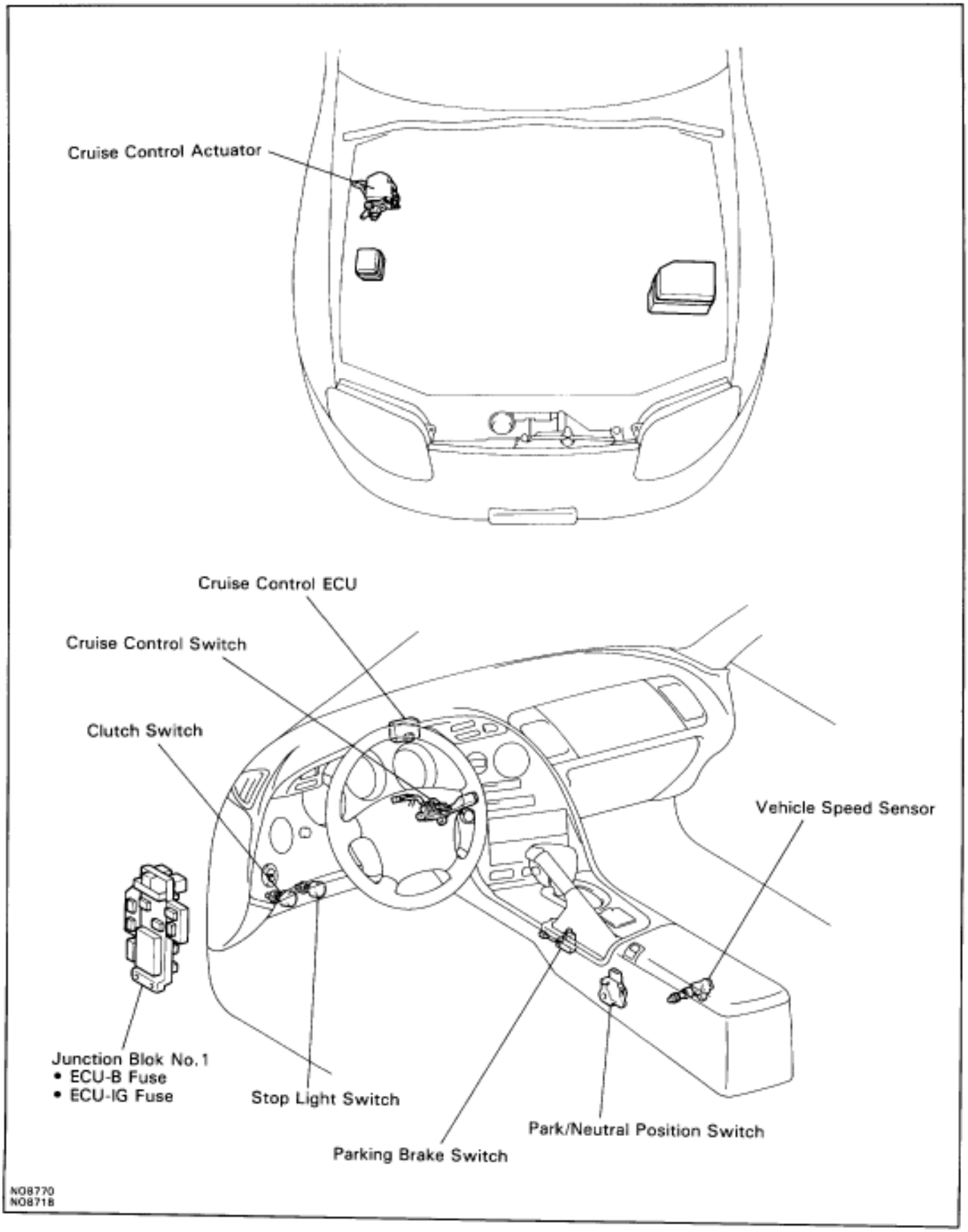

HOW TO PROCEED WITH TROUBLESHOOTING

Perform troubleshooting in accordance with the procedure on the following page.

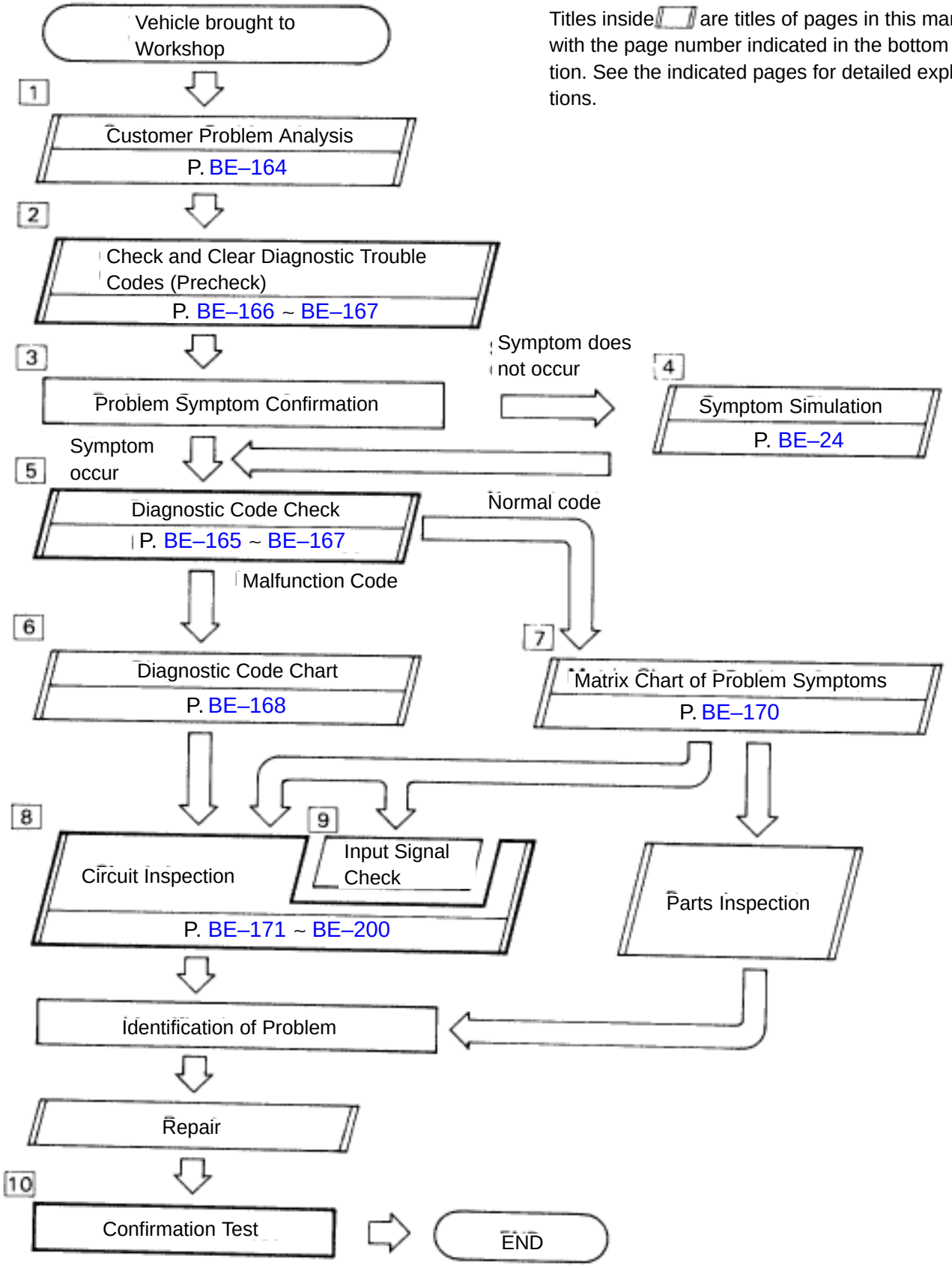

Titles inside [ ] are titles of pages in this manual, with the page number indicated in the bottom portion. See the indicated pages for detailed explanations.

Step [2], [5], [8], [10]: Diagnostic steps permitting the use of the TOYOTA hand–held tester or TOYOTA break–out–box.

CUSTOMER PROBLEM ANALYSIS

CRUISE CONTROL Check Sheet

Inspector's Name:

Customer's Name		**Registration No.**	
		Registration Year	/ /
		Frame No.	
Date Vehicle Brought In	/ /	**Odometer Reading**	km Miles

Date Problem First Occurred	/ /
How Often does Problem Occur?	Continuous Intermittent (Times a day)
Vehicle Speed when Problem Occurred	km/h mph

Symptoms	Auto cancel occurs	• Driving condition ☐ City driving ☐ Freeway ☐ Up hill ☐ Down hill • After cancel occurred, did the driver activate cruise control again? ☐ Yes ☐ No
	Cancel does not occur	With brake ON ☐ With parking brake ON ☐ EXCEPT D RANGE ☐ At 40 km/h (25 mph) or less ☐ When control SW turns to CANCEL position
	Cruise control malfunction	Slip to acceleration side Slip to acceleration side Hunting occurs O/D cut off does not occur O/D does not return
	Switch malfunction	SET ACCEL. COAST RESUME CANCEL
	Faulty CRUISE MAIN indicator light	Remains ON Does not light up Blinking

Diagnostic Trouble Code Check	**1st Time**	Normal Code ☐ Malfunction Code (Code)
	2nd Time	Normal Code ☐ Malfunction Code (Code)

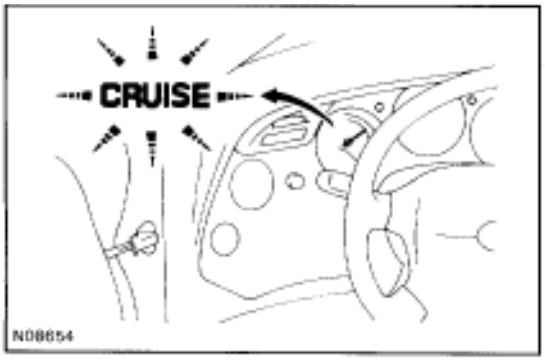

DIAGNOSIS SYSTEM

INDICATOR CHECK

1. Turn the ignition switch to ON.
2. Check that the CRUISE MAIN indicator light comes on when the cruise control main switch is turned ON, and that the indicator light goes off when the main switch is turned OFF.
   HINT: If the indicator check result is not normal, proceed to troubleshooting (See page BE–43 for the combination meter section.)

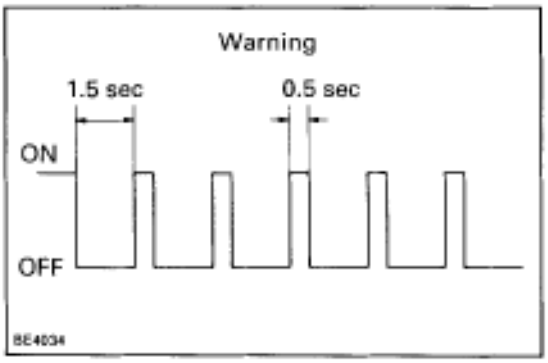

DIAGNOSTIC TROUBLE CODE CHECK

HINT: If a malfunction occurs in the vehicle speed sensors or actuator, etc. during cruise control driving, the ECU actuates AUTO CANCEL of the cruise control and blinks the CRUISE MAIN indicator light to inform the driver of a malfunction. At the same time, the malfunction is stored in memory as a diagnostic trouble code.

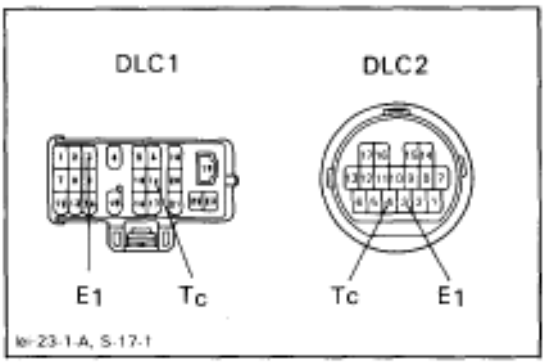

OUTPUT OF DIAGNOSTIC TROUBLE CODE

Using diagnosis check wire:

1. Turn the ignition switch ON.
2. Using SST, connect terminals Tc and E_1 of DLC2.
   SST 09843–18020
3. Read the diagnostic trouble code on the CRUISE MAIN indicator light.
   HINT: If the diagnostic trouble code is not output, inspect the diagnosis circuit (See page BE–199).

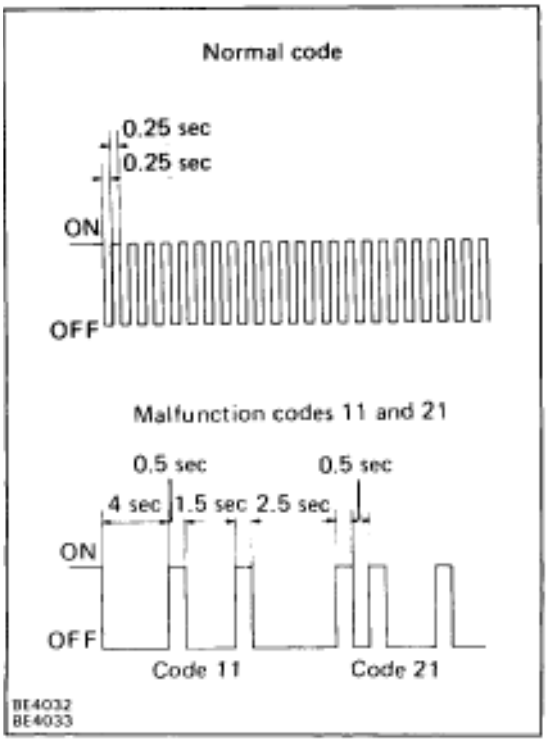

As an example, the blinking patterns for codes; normal, 11 and 21 are shown in the illustration.

4. Check for the problem using the diagnostic trouble code table on the next page.
5. After completing the check, disconnect terminals Tc and E_1, and turn off the display.

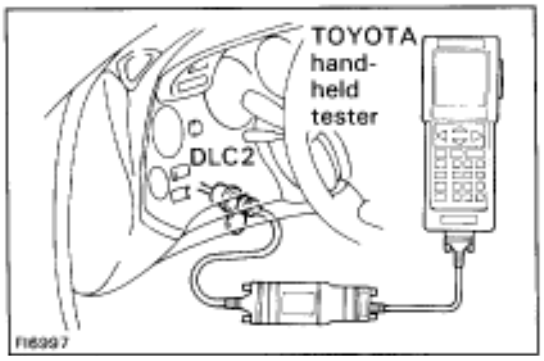

Using TOYOTA hand–held tester:

1. Hook up the TOYOTA hand–held tester to the DLC2.
2. Monitor the ECU data by following the prompts on the tester screen.
   HINT: TOYOTA hand–held tester has a ”Snapshot” function which records the monitored data.
   Please refer to the TOYOTA hand–held tester operator’s manual for further details.

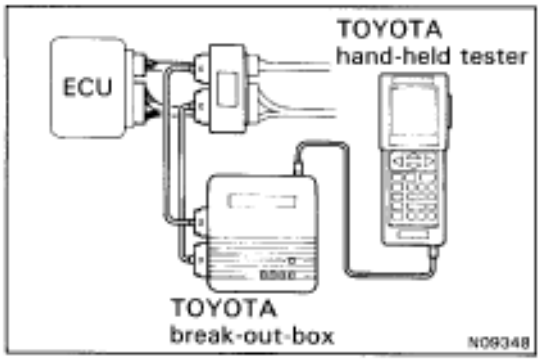

ECU TERMINAL VALUES MEASUREMENT USING TOYOTA BREAK–OUT–BOX AND TOYOTA HAND–HELD TESTER

1. Hook up the TOYOTA break–out–box and TOYOTA handheld tester to the vehicle.
2. Read the ECU input/output values by following the prompts on the hand–held tester screen.
   HINT: TOYOTA hand–held tester has a ”Snapshot” function. This records the measured values and is effective in the diagnosis of intermittent problems.
   Please refer to the TOYOTA hand–held tester/TOYOTA break–out–box operator’s manual for further details.

DIAGNOSTIC TROUBLE CODE

DTC	CRUISE MAIN Indicator Light Blinking Pattern	Diagnosis
–		Normal
11		• Overcurrent (short) in motor circuit.
12		• Overcurrent (short) in magnet clutch circuit. • Open in magnet clutch circuit for 0.8 sec.
13		• Position sensor detects abnormal voltage.
14		• Open in actuator motor circuit. • Position sensor signal value does not change when the motor operates.
21		• Speed signal is not input to the ECU while cruise control is set.
*23		• Actual vehicle speed has dropped by 16 km/h (10 mph) or more below the set speed. • Vehicle Speed Sensor Pulse is abnormal.
32		• Short in control switch circuit.
34		• Voltage abnormality in control switch.
41		• Duty ratio of 100% output to motor acceleration side.
42		• Source voltage drop.

HINT: When 2 or more codes are indicated, the lowest numbered code will be displayed first.

(*) When the vehicle speed is reduced on uphill roads, the speed can be set again and driving continued. (This is not a malfunction.)

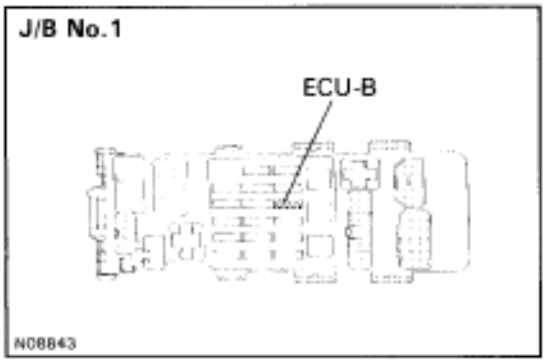

Diagnostic Trouble Code Clearance

1. After completing repairs the diagnostic trouble code retained in memory can be cleared by removing the ECU–B fuse for 10 seconds or more, with the ignition switch off.
2. Check that the normal code is displayed after connecting the fuse.

DIAGNOSTIC TROUBLE CODE CHART

If a malfunction code is displayed during the diagnostic trouble code check, check the circuit listed for that code in the table below and proceed to the appropriate page.

Code No.	Circuit Inspection	Page
11, 14	• Actuator Motor Circuit.	BE–171
12	• Actuator Magnet Clutch Circuit.	BE–172
13	• Actuator Motor Circuit • Actuator Position Sensor Circuit	BE–171 BE–175
14	• Actuator Motor Circuit • Actuator Position Sensor Circuit	BE–171 BE–175
21	• Speed Sensor Circuit	BE–177
23	• Speed Sensor Circuit	BE–177
32, 34	• Control Switch Circuit. (Cruise Control Switch)	BE–197

HINT:

1. If the instruction ”Proceed to next circuit inspection shown on matrix chart” is given in the flow chart for each circuit, proceed to the circuit with the next highest number in the table to continue check.
2. If the trouble still reappears even though there are no abnormalities in any of the other circuits, then check or replace the cruise control ECU as the last step.

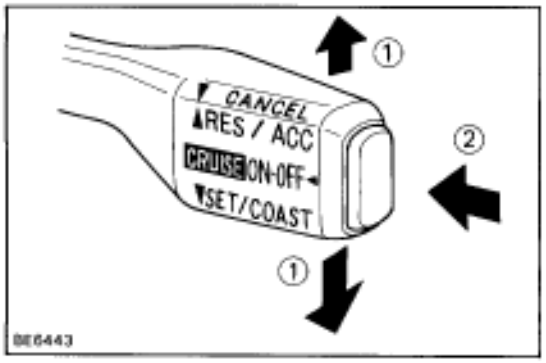

INPUT SIGNAL CHECK

Output Code

1. (a) For check No.1 No.3
   Turn the ignition switch on.
   (b) For check No.4
   Jack up the vehicle.
   Start the engine.
2. Turn the control switch to SET/COAST position or RES/ACC position and hold it down or up (1).
3. Push the main switch on (2).
4. Check that the CRUISE MAIN indicator light blinks twice or 3 times repeatedly.
5. Turn the SET/COAST switch or RES/ACC position off.
6. Operate each switch as listed in the table below.
7. Read the blinking pattern of the CRUISE MAIN indicator light.
8. After performing the check, turn the main switch off.
   HINT: When two or more signals are input to the ECU, only the lowest–numbered code is displayed.

No.	Operation Method	CRUISE MAIN Indicator Light Blinking Pattern	Diagnosis
1	Turn SET/COAST switch ON.	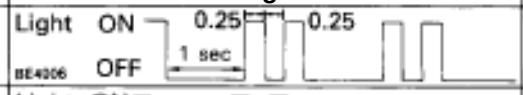	SET/COAST switch circuit is normal.
2	Turn RES/ACC switch ON.		RES/ACC switch circuit is normal.
3	Turn CANCEL switch ON.	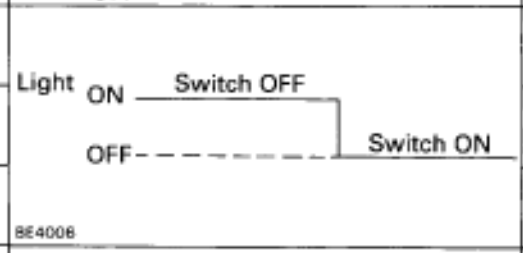	CANCEL switch circuit is normal.
	Turn stop light switch ON. (Depress brake pedal)		Stop light switch circuit is normal.
	Turn parking brake switch ON. (Pull up the parking brake lever).		Parking brake switch circuit is normal.
	Turn neutral start switch OFF. (Shift to EXCEPT D RANGE).	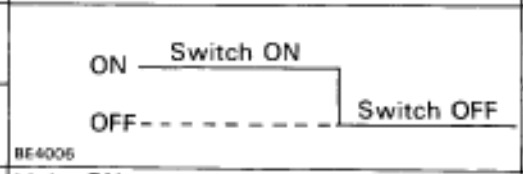	Neutral start switch circuit is normal.
	Turn clutch switch OFF. (Depress clutch pedal)		Clutch switch circuit is normal.
4	Drive at 40 km/h (25 mph) or higher.		Speed sensor is normal.
	Drive at 40 km/h (25 mph) or below.	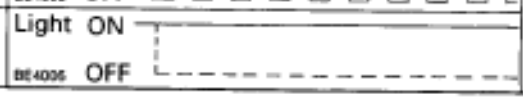	

MATRIX CHART OF PROBLEM SYMPTOMS

The table below will be useful for you in troubleshooting these electrical problems. The most likely causes of the malfunction are shown in the order of their probability. Inspect each part in the order shown, and replace the part when it is found to be faulty.

See page			IN–35	BE–171	BE–197	BE–179	BE–182	BE–191	BE–189	BE–177		BE–184	IN–30	BE–165
Inspection Item / Diagnosis Trouble Code / Problem	Type A	Type B	Cruise Control ECU	Actuator	Main Switch (in Control Switch)	Control Switch	Stop Light Switch	Clutch Switch or Park/ Neutral Position Switch	Parking Brake Switch	Vehicle Speed Sensor	Speed Control Cable Function	Throttle Position Sensor (IDL)	Wire Harness	Indicator Light
• "CRUISE" Indicator light blinks. • Cruise control system does not set. • Cruse control system does not operate.	11	–	3	2									1	
	12	–	4	2			3						1	
	13	–	3	2									1	
	14	–	3	2									1	
	21	–	3							2			1	
	23	–	4							2	3		1	
	32	–	3			2							1	
	34	–	3			2							1	
	41	–	1											
	42	–	Source voltage drop											
Indicator light does not light up			3										1	2
Large speed drop when the cruise control switch turned to SET.			4	3							1	2		
Vehicle speed fluctuates when cruise control switch turned to SET.			4	3							1	2		
Set speed deviates on high or low side.			4	3						1	2			
Acceleration response is sluggish when cruise control switch turned to "ACCEL" or "RESUME"			5	4		3				2	1			
Cruise control system does not set. Cruise control system does not operate.	4	OK	9	8	2	3	4	5	6		7		1	
		NG	2							1				
Set speed does not cancel when brake pedal depressed.	3	OK	1											
		NG	2				1							
Set speed does not cancel when parking brake lever pulled.	3	OK	1											
		NG	2						1					
Cruise control not cancelled, even when transmission is shifted to EXCEPT D RANGE.	3	OK	1											
		NG	2					1						
Set speed does not cancel when clutch pedal depressed.	3	OK	1											
		NG	2					1						
Set speed does not cancel when cruise control switch turned to CANCEL.	3	OK	1											
		NG	2			1								
Vehicles speed does not decrease when cruise control switch turned to COAST.	1	OK	4	1						3	2			
		NG	2			1								
Vehicle speed does not accelerate when cruise control switch turned to ACCEL.	2	OK	4	1						3	2			
		NG	2			1								
Vehicle speed does not return to memorized cruise when control switch turned to RESUME.	2	OK	4	1						3	2			
		NG	2			1								
Speed can be set below about 40 km/h (25 mph.)	4	OK	1											
		NG	2							1				
Cruise control does not disengage even at about 40 km/h (25 mph) or less.	4	OK	2	1										
		NG	2							1				

CIRCUIT INSPECTION

DTC 11 14 41 Actuator Motor Circuit

CIRCUIT DESCRIPTION

The actuator motor is operated by signals from the ECU. Acceleration and deceleration signals are transmitted by changes in the Duty Ratio (See note below).

Duty Ratio

The duty ratio is the ratio of the period of continuity in one cycle. For example, if A is the period of continuity in one cycle, and B is the period of non–continuity, then

$$\text{Duty Ratio} = \frac{A}{A + B} \times 100\ (\%)$$

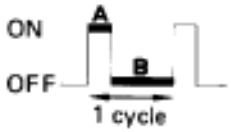

Code	Diagnosis	Trouble area
11	• Overcurrent (short) in motor circuit.	• Cruise control actuator motor • Harness or connector between actuator motor and ECU • ECU
14	• Open in actuator motor circuit.	
41	• Duty ratio of 100 % output to motor acceleration side.	

WIRING DIAGRAM

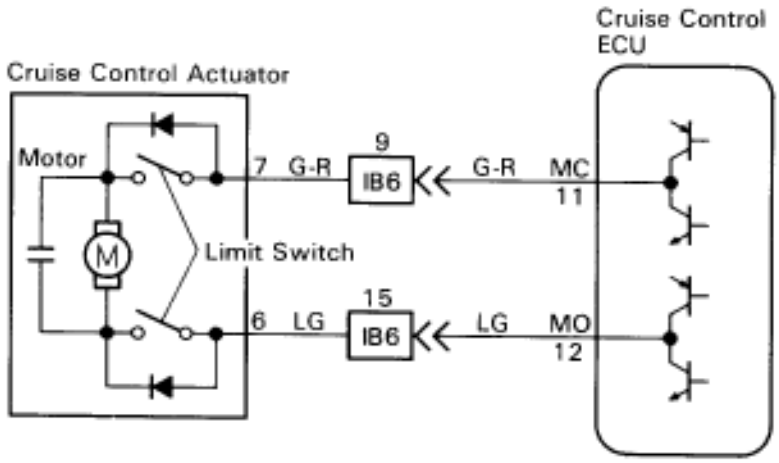

N08429

1 **Check actuator motor.**

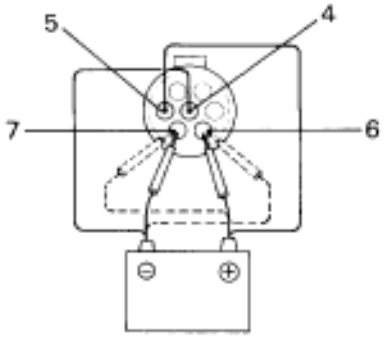

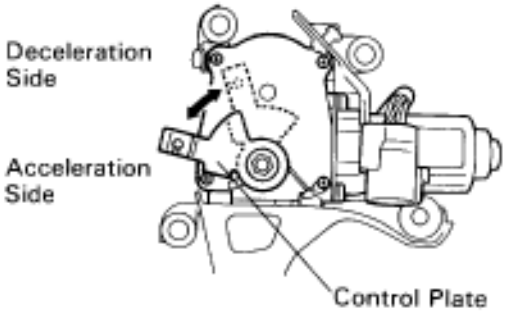

NO8717
NO8713

P (1) Remove cruise control actuator.
(2) Disconnect actuator connector.

C (1) Connect positive (+) lead to terminal 5 and negative (–) lead to terminal 4 of actuator connector. (Magnet clutch ON)
(2) When battery positive voltage is applied to each of the actuator connector terminals check that the control plate moves smoothly without hesitating.

○—○ Connect

Moving direction \ Terminal	Positive ⊕	Negative ⊖	6	7
Acceleration side	○	○	○	
		○		○
Deceleration side	○			○
		○	○	

(3) With the motor rotating as in 2., check that the motor is stopped by limit switches when the control plate moves to fully opened or fully closed position.

OK

NG **Replace actuator assembly.**

2 **Check harness and connectors between cruise control ECU and actuator motor (See page IN–30).**

OK

NG **Repair or replace harness or connector.**

Proceed to next circuit inspection shown on matrix chart (See page BE–170).
However, when diag. trouble code 11, 14, 41 is displayed, check and replace cruise control ECU.

DTC 12 Actuator Magnet Clutch Circuit

CIRCUIT DESCRIPTION

This circuit turns on the magnet clutch inside the actuator during cruise control operation according to the signal from the ECU. If a malfunction occurs in the actuator or speed sensor, etc. during cruise control, the rotor shaft between the motor and control plate is released.
When the brake pedal is depressed, the stoplight switch turns on, supplying electrical power to the stoplight. Power supply to the magnet clutch is mechanically cut and the magnet clutch is turned OFF.
When driving downhill, if the vehicle speed exceeds the set speed by 15 km/h (9 mph), the ECU turns the magnet clutch OFF. If the vehicle speed later drops to within 10 km/h (6 mph) above the set speed, then cruise control at the set speed is resumed.

Code No.	Diagnosis	Trouble area
12	• Overcurrent (short) in magnet clutch circuit. • Open (0.8 sec) in magnet clutch circuit.	• Cruise control magnet clutch. • Harness or connector between ECU and magnet clutch, magnet clutch and body ground. • ECU

WIRING DIAGRAM

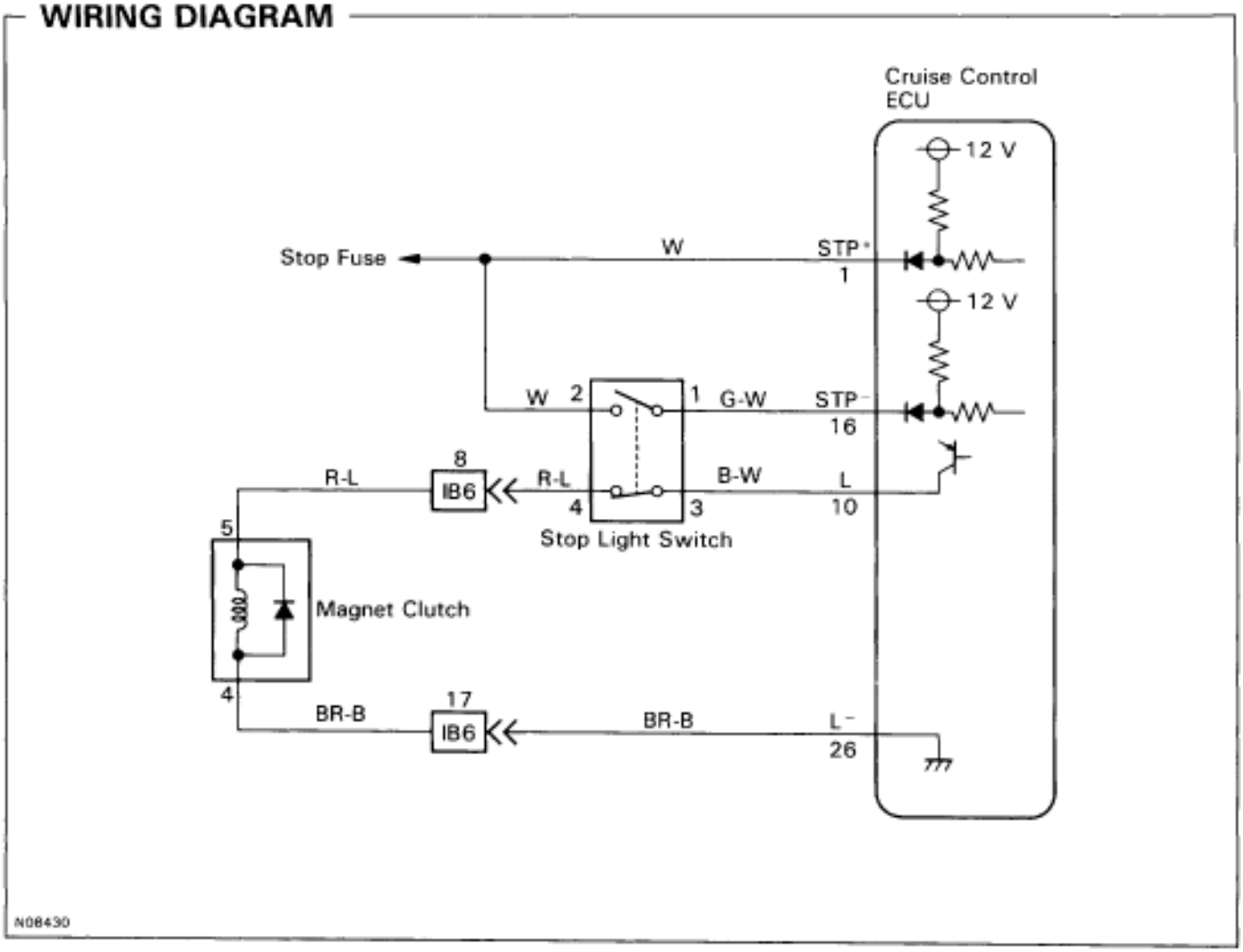

INSPECTION PROCEDURE

1 Check actuator magnet clutch.

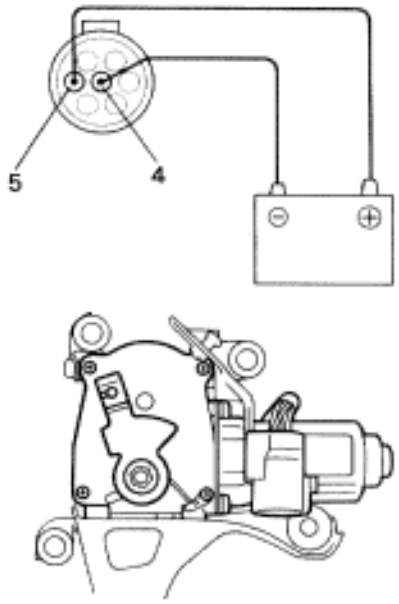

N08514
N08714

P (1) Remove cruise control actuator.
(2) Disconnect actuator connector.

C Move the control plate by hand.

OK **Control plate moves. (Magnet clutch off)**

C (1) Connect positive ⊕ lead to terminal 5 and negative ⊖ lead to terminal 4 of actuator connector.

(2) Move the control plate by hand.

OK **Control plate doesn't move. (Magnet clutch on)**

OK

NG **Replace actuator assembly.**

2 Check stop light switch.

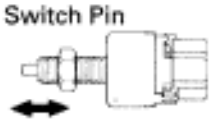

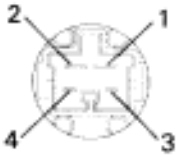

BE1444 BE6234

P Disconnect stop light switch connector.

C Check continuity between terminals.

OK

Continuity

Terminals / Switch position	1	2	3	4
Switch pin free (Brake pedal depressed)	○—○			
Switch pin pushes in (Brake pedal released)			○—○	

OK

NG **Replace stop light switch.**

3 Check for open and short in harness and connectors between ECU and stop light switch, stop light switch and magnet clutch, magnet clutch and body ground. (See page IN–30).

OK

NG **Repair or replace harness or connector.**

Proceed to next circuit inspection shown on matrix chart (See page BE–170).
However, when diag. trouble code 12, is displayed, check harness and connector for loose connection. If connection is normal, check and replace ECU.

DTC 13 14 Actuator Position Sensor Circuit

CIRCUIT DESCRIPTION

This circuit detects the rotation position of the actuator control plate and sends a signal to the ECU.

Code No.	Diagnosis	Trouble area
13	• Position sensor detects abnormal voltage.	• Cruise control actuator position sensor. • Harness or connector between actuator position sensor and body ground. • ECU
14	• Position sensor signal value does not change when the motor operates.	

WIRING DIAGRAM

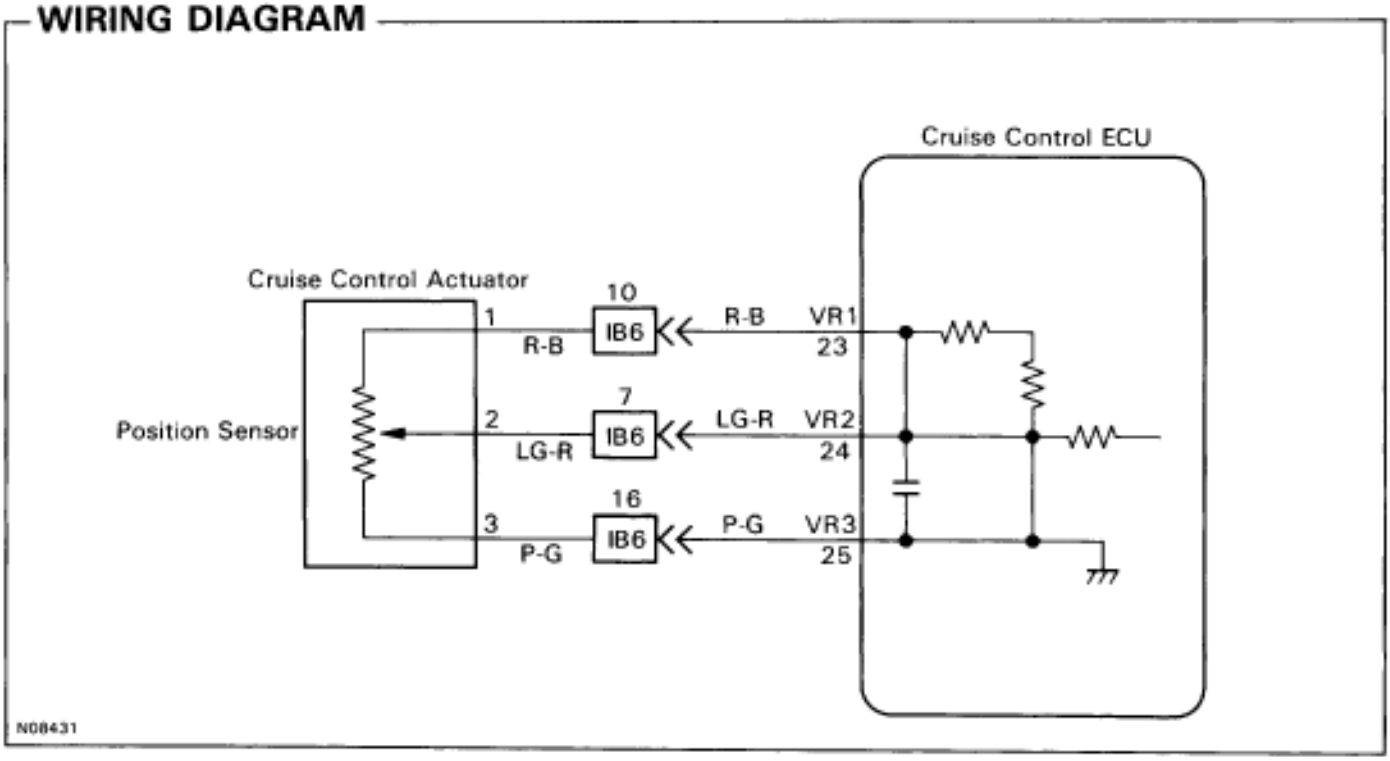

INSPECTION PROCEDURE

1 Check voltage between terminals VR2 and VR3 of ECU connector.

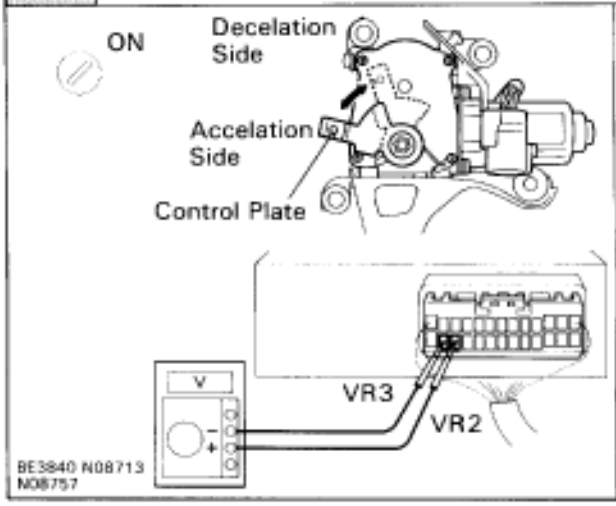

P Remove ECU with connectors still connected.

C (1) Turn ignition switch ON.
(2) Measure voltage between terminals VR2 and VR3 of ECU connector while turning control plate slowly by hand from the deceleration side to the acceleration side.

OK **Voltage:**
Fully closed: approx. 1.3 V
Fully opened: approx. 4.1 V
In addition, as the control plate is turned, the voltage should increase gradually without interruption.

NG

OK → **Proceed to next circuit inspection shown on matrix chart (See page BE–170).**

2 Check actuator position sensor.

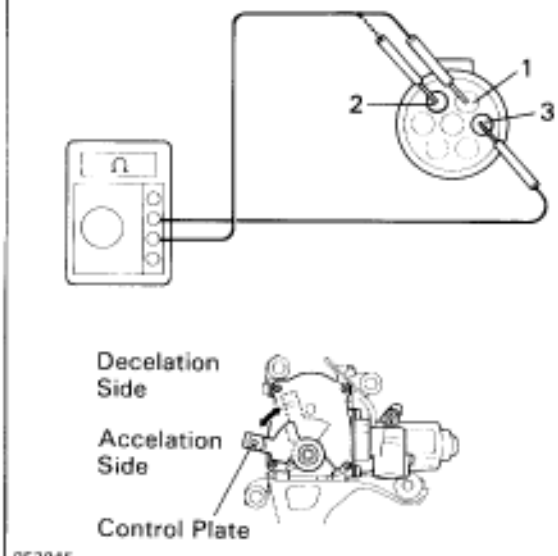

P (1) Remove cruise control actuator.
(2) Disconnect the actuator connector.

C Measure resistance between actuator terminals 1 and 3 of actuator connector.

OK **Resistance: Approx. 2.2 k Ω**

C Measure resistance between actuator terminals 2 and 3 of actuator connector, while turning the control plate slowly by hand from the deceleration side to the acceleration side.

OK **Resistance:**
Fully closed: Approx. 260 k Ω
Fully opened: Approx. 2.2 k Ω
In addition, as the control plate turns, the resistance should increase gradually without interruption.

OK

NG → **Replace actuator assembly.**

3 Check for open and short in harness and connector between ECU and actuator position sensor (See page IN–30).

OK

NG → **Repair or replace harness or connector.**

Check harness and connector for loose connection.
If connection is normal check and replace ECU.

DTC 21 23 Speed Sensor Circuit

CIRCUIT DESCRIPTION

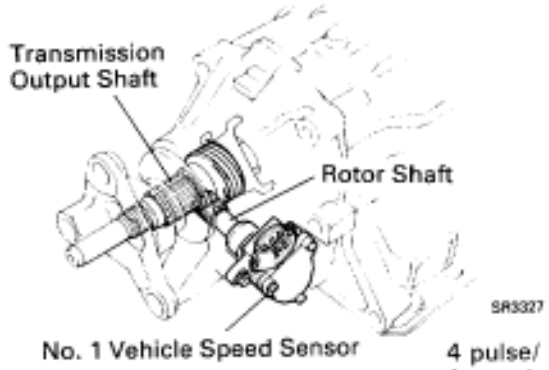

The speed sensor signal is sent to cruise control ECU as vehicle speed signal.
The rotor shaft is driven by the gear of the transmission. For each rotation of the shaft, the speed sensor sends a 4–pulse signal to the combination meter.
This signal is converted inside the combination meter and sent as a 4–pulse signal to the cruise control ECU.
The ECU calculates the vehicle speed from this pulse frequency.

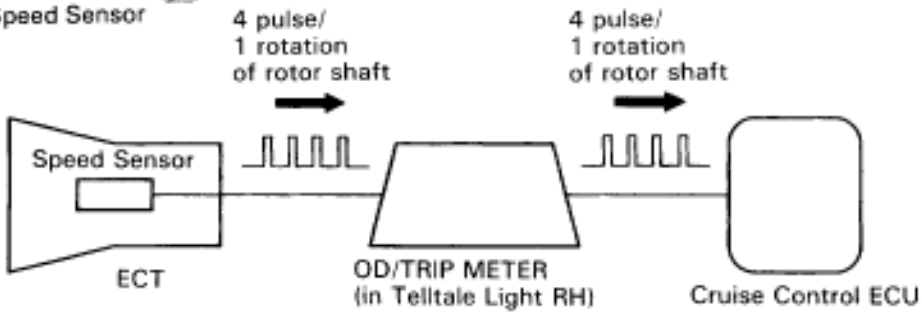

NO9508

Code No.	Diagnosis	Trouble area
21	Speed signal is not input to the ECU while cruise control is set..	• Speed sensor • Combination meter • Harness or connector between speed sensor and combination meter, combination meter and ECU. • ECU
23	Vehicle speed decrease 16 km/h or more than preset speed. Vehicle speed sensor pulse is abnormal.	• Actuator • Speed sensor • Harness or connector in OD and SPD circuit (Open or short intermittently) • ECU

WIRING DIAGRAM

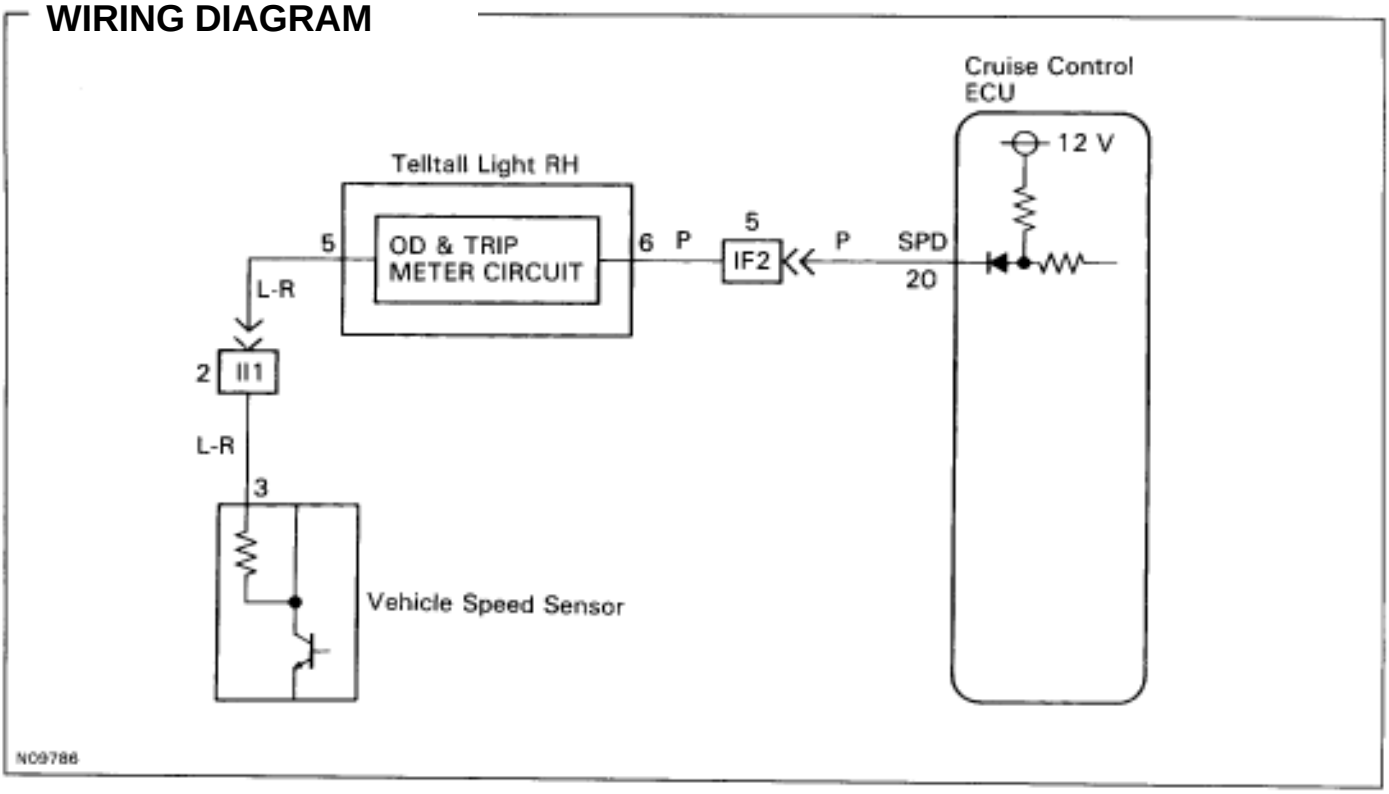

INSPECTION PROCEDURE

1 Input signal check.

Vehicle speed	Indicator light blinking pattern
Above 40 km/h (25 mph)	ON / OFF — Blinks — 0.25 sec 0.25 sec
Below 40 km/h (25 mph)	ON / OFF — Stays ON

BE4006

C (1) See input signal check on page BE–169.
(2) Check indicator light operation when driving with vehicle speed above 40 km/h (25 mph), and with vehicle speed below 40 km/h (25 mph).

OK **Vehicle speed above 40 km/h (25 mph): Indicator light blinks**
Vehicle speed below 40 km/h (25 mph): Indicator light stays on

NG

OK **Proceed to next circuit inspection shown on matrix chart** (See page BE–170).

2 Check speedometer circuit (See combination meter troubleshooting on page BE–41).

OK

NG **Repair or replace speed sensor, harness, connector or combination meter assembly.**

Check harness and connector for loose connection.
If connection is normal, check and replace ECU.

DTC 32 34 Control Switch Circuit (Cruise Control Switch)

CIRCUIT DESCRIPTION

This circuit carries the SET/COAST, RESUME/ACCEL and CANCEL signals (each voltage) to the ECU.

Code No.	Diagnosis	Trouble area
32	Short in, control switch circuit.	• Cruise control switch. • Harness or connector between control switch and ECU. • ECU
34	Voltage abnormality in control switch	

WIRING DIAGRAM

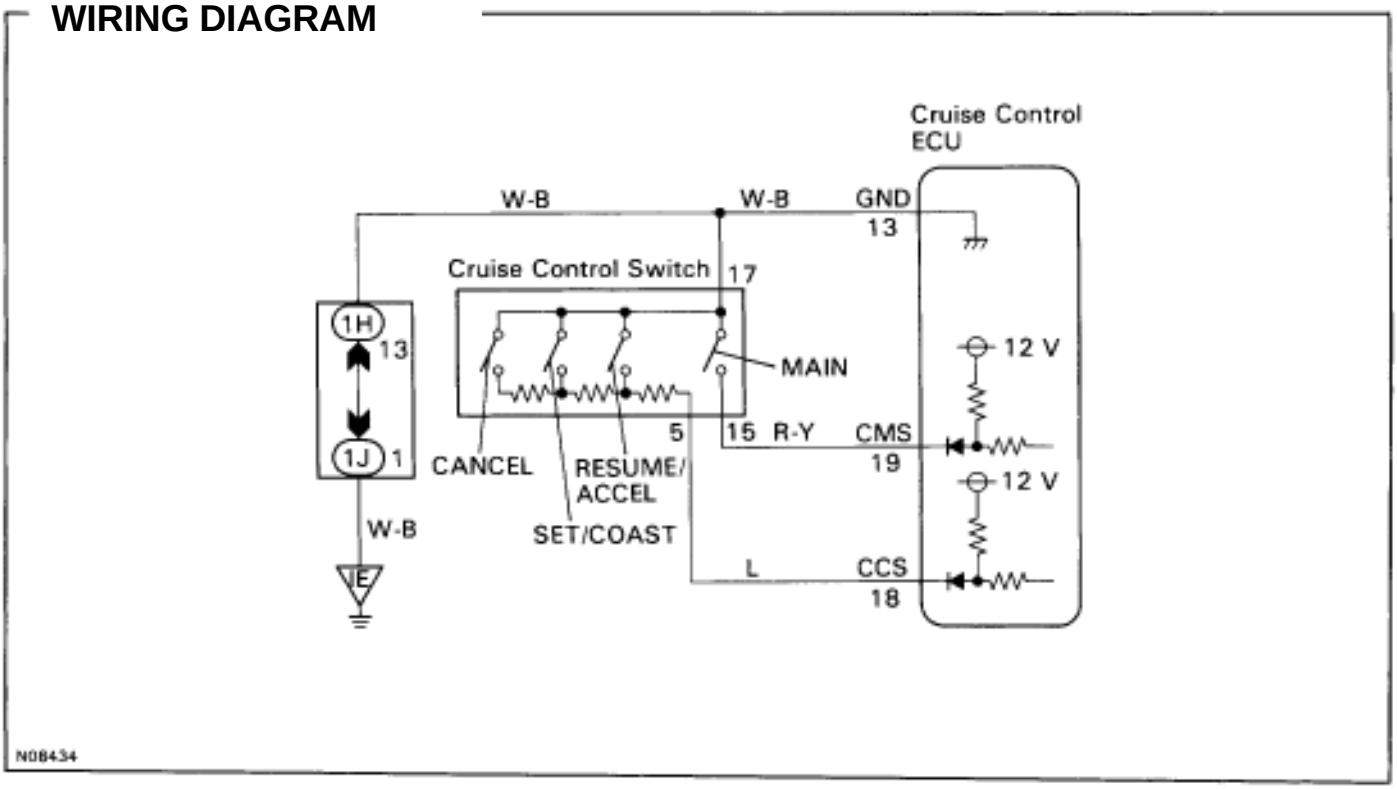

INSPECTION PROCEDURE

1 Input signal check.

Input Signal	Indicator light blinking pattern
SET/COAST SWITCH	2 Pulse: ON / OFF
RESUME/ACCEL SWITCH	3 Pulse: ON / OFF
CANCEL SWITCH	Switch OFF: ON / OFF, Switch ON

BE4006

P (1) See input signal check on page BE–169.
(2) Check the indicator light operation when each of the SET/COAST, RESUME/ACCEL and CANCEL is turned ON.

OK **SET/COAST, RESUME/ACCEL Switch**
The signals shown in the table on the left should be output when each switch is ON. The signal should disappear when the switch is turned OFF.
CANCEL Switch.
The indicator light goes off when the cancel switch is turned ON.

NG

OK **Proceed to next circuit inspection shown on matrix chart** (See page BE–170).

2 Check voltage between terminal CCS of ECU connector and body ground.

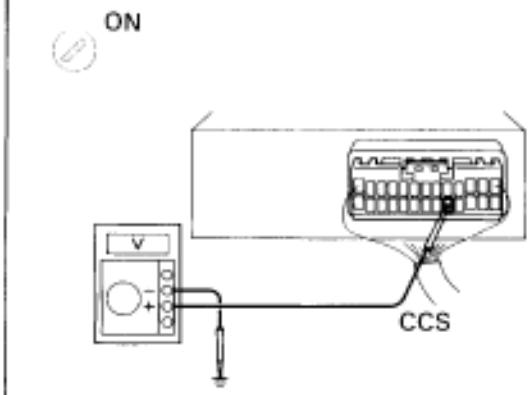

BE3840
N08761

P Remove ECU with connectors still connected.

C (1) Turn ignition switch ON.
(2) Measure voltage between terminal CCS of ECU connector and body ground, when each of the SET/COAST, RESUME/ACCEL and CANCEL is turned ON.

OK

Switch position	Voltage
Neutral	10 – 14 V
RES/ACC	0.7 – 2.5 V
SET/COAST	2.3 – 4.6 V
CANCEL	4.1 – 7.2 V

NG

OK **Proceed to next circuit inspection shown on matrix chart** (See page BE–170).

Go to step [3].

3 **Check control switch.**

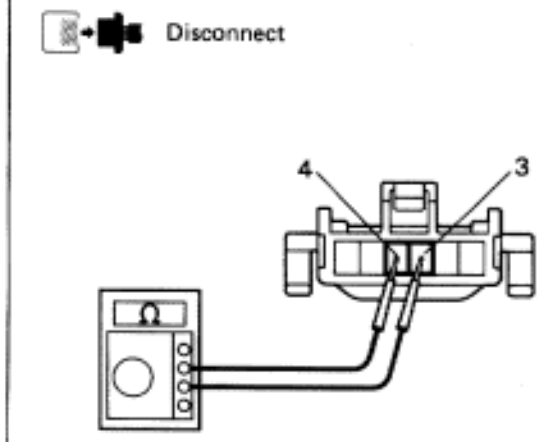

P (1) Remove steering wheel center pad.
(2) Disconnect control switch connector (See page RS Section).

C Measure resistance between terminals 3 and 4 of control switch connector when control switch is operated.

OK

Switch position	Resistance
Neutral	1 MΩ or higher
RES/ACC	60 – 80 Ω
SET/COAST	180 – 220 Ω
CANCEL	400 – 440 Ω

Hint When diagnostic trouble code 34 is displayed, carefully check that resistance is always ∞ in neutral position, particularly when switching between RES/ACC and SET/COAST.

OK

NG → **Replace cruise control switch.**

4 **Check for open and short in harness and connector between ECU and** control switch (See page IN–30).

OK

NG → **Repair or replace harness or connector.**

Check and replace ECU.

Stop Light Switch Circuit

CIRCUIT DESCRIPTION

When the brake is on, battery voltage normally applies through the stop fuse and stop switch to terminal STP–of the ECU, and the ECU turns the cruise control off.

A fail–safe function is provided so that cancel functions normally, even if there is a malfunction in the stop light signal circuit.

(1) If the harness connected to terminal STP–has an open, terminal STP–will have battery positive voltage and the cruise control will be turned off, also SET not occurring.

(2) If the stop fuse is open, terminal STP + becomes approx. 0 V when the brake is turned on, so the ECU performs cancel function normally.

Also, when the brake is on, the magnetic clutch is cut mechanically by the stop light switch, turning the cruise control off. (See page BE–173 for operation of the magnetic clutch.)

WIRING DIAGRAM

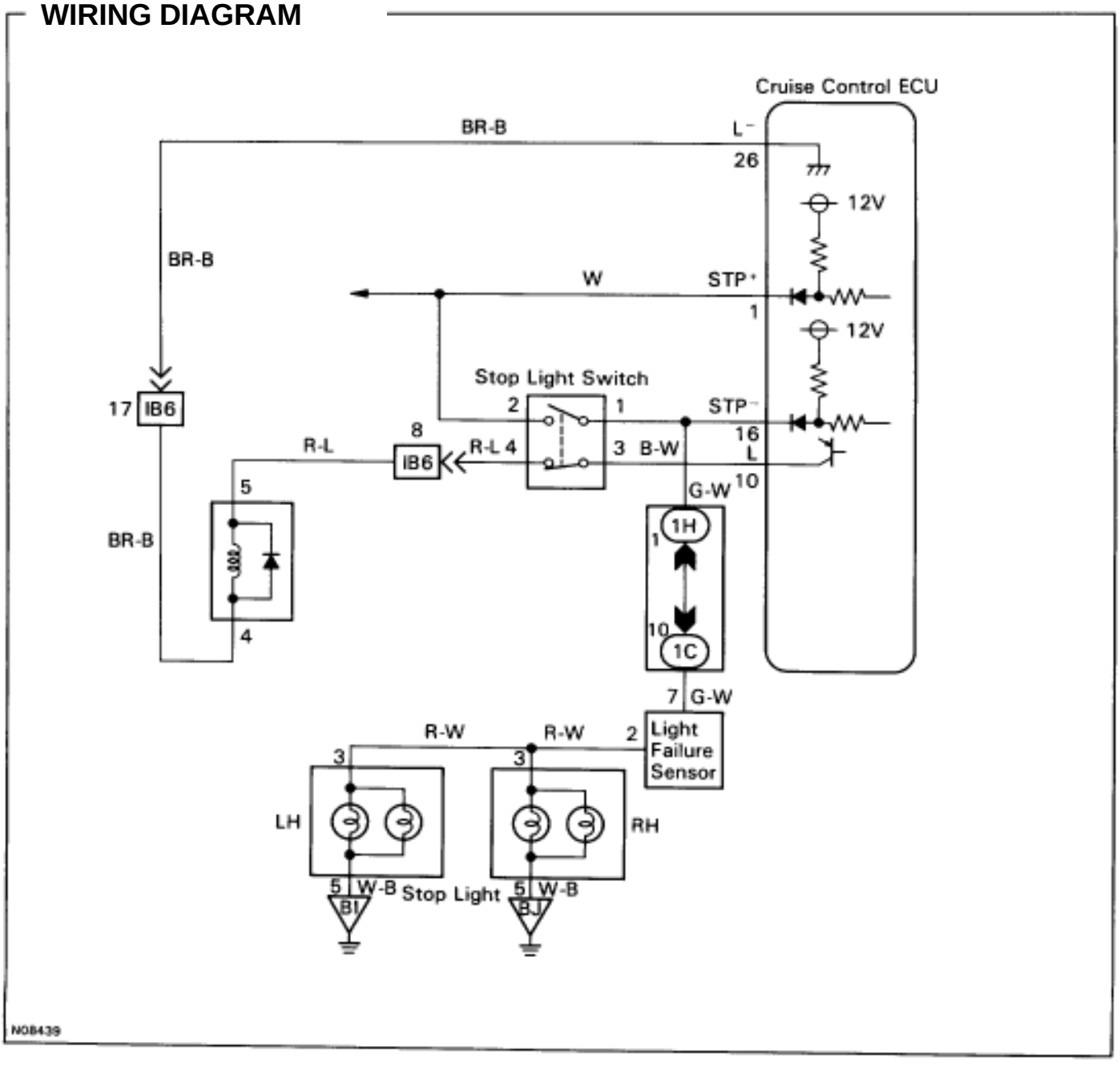

INSPECTION PROCEDURE

1 Check operation of stop light.

C Check the stop light comes on when the brake pedal is depressed, and turns off when brake pedal is released.

OK

NG → **Check stop light circuit.**

2 Input signal check.

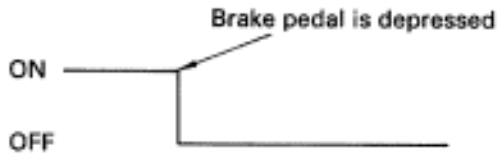

C (1) See input signal check on page BE–169.
(2) Check the indicator light when the brake pedal is depressed.

OK **The indicator light goes off when the brake pedal is depressed.**

NG

OK → **Proceed to next circuit inspection shown on matrix chart** (See page BE–170).

3 Check voltage between terminal STP+, STP– of ECU connector and body ground.

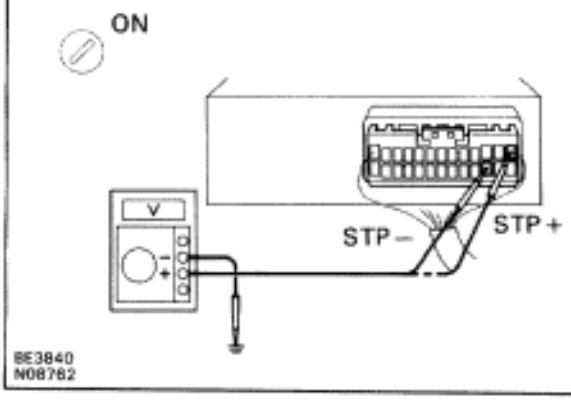

P Remove ECU with connectors still connected.

C (1) Turn ignition switch ON.
(2) Measure voltage between terminal STP+, STP– of ECU connector and body ground, when the brake pedal is depressed and released.

OK

	STP +	STP –
Depressed	10 – 14 V	10 – 14 V
Released	10 – 14 V	Below 1 V

NG

OK → **Proceed to next circuit inspection shown on matrix chart** (See page BE–170).

4 Check for open in harness and connectors between terminal STP+ of ECU and stop light switch, terminal STP– of ECU and stop light switch (See page IN–30).

OK

NG → **Repair or replace harness or connector.**

Check and replace ECU.

Idle Switch Circuit

CIRCUIT DESCRIPTION

When the idle switch is turned ON, a signal is sent to the ECU. The ECU uses this signal to correct the discrepancy between the throttle valve position and the actuator position sensor value to enable accurate cruise control at the set speed. If the idle switch is malfunctioning, problem symptoms also occur in the engine, so also inspect the engine.

WIRING DIAGRAM

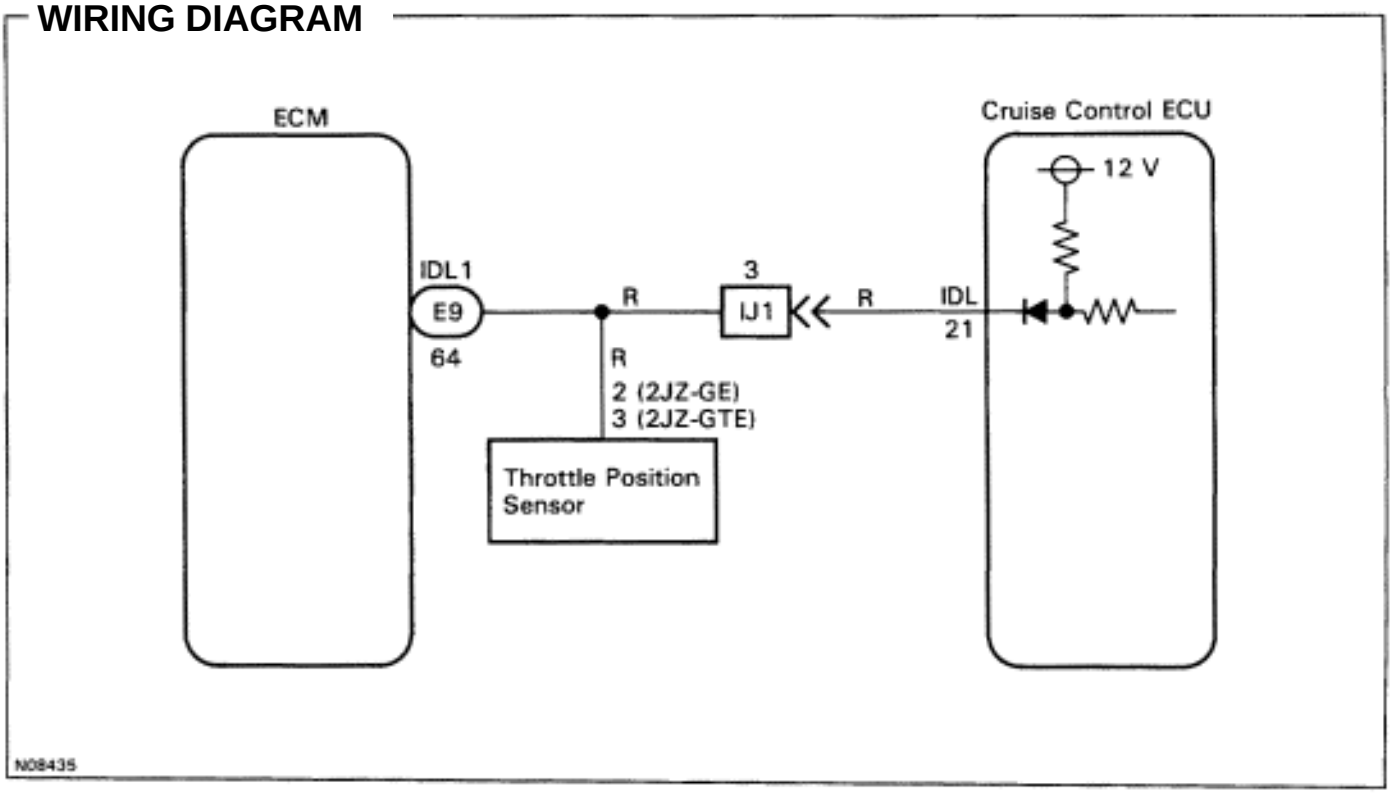

INSPECTION PROCEDURE

1 Check voltage between terminal IDL of ECU connector and body ground.

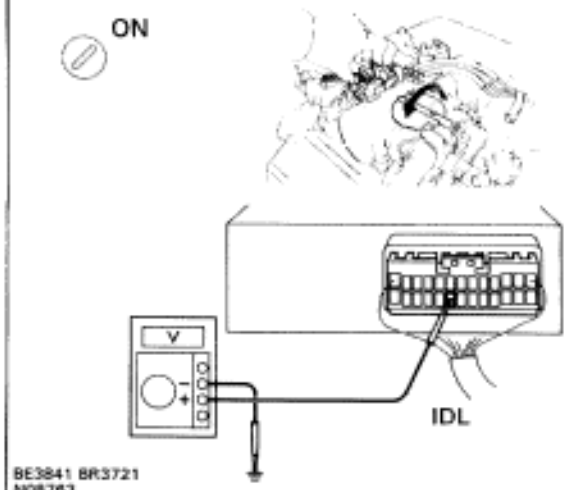

P (1) Remove cruise control ECU with connectors still connected.
(2) Disconnect ECM and ABS & TRAC ECU connector.

C (1) Turn ignition switch ON.
(2) Measure voltage between terminal IDL of ECU connector and body ground, when the throttle valve is fully closed and fully opened.

OK

Throttle valve position	Voltage
Fully opened	10 – 14 V
Fully closed	Below 8 V

NG

OK → **Proceed to next circuit inspection shown on matrix chart** (See page BE–170).

2 Check throttle position sensor.

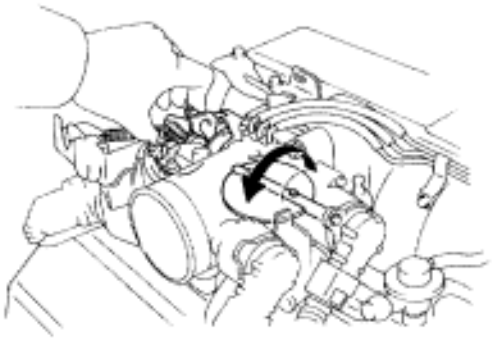

P Disconnect throttle position sensor connector.

C Measure resistance between terminals 1 and 2 of throttle position sensor connector, when the throttle valve is fully closed and fully opened.

OK

Throttle valve position	Voltage
Fully opened	1 MΩ or higher
Fully closed	Below 2 Ω

OK

NG → **Replace throttle position sensor.**

3 Check for open and short in harness and connector between ECU and throttle position sensor, throttle position sensor and body ground (See page IN–30).

OK

NG → **Repair or replace harness or connector.**

Check and replace ECU.

Electronically Controlled Transmission Communication Circuit

CIRCUIT DESCRIPTION

When driving uphill under cruise control, in order to reduce shifting due to ON–OFF overdrive operation and to provide smooth driving, when down shifting in the electronically controlled transmission occurs, a signal to prevent upshift until the end of the uphill slope is sent from the cruise control ECU to the electronically controlled transmission.

Terminal ECM of the cruise control ECU detects the shift change signal (output to electronically controlled transmission No.2 solenoid) from the electronically controlled transmission.

If vehicle speed down, also when terminal ECT of the cruise control ECU receives down shifting signal, it sends a signal from terminal OD to ECM to cut overdrive until the end of the uphill slope, and the gear shifts are reduced and gear shift points in the electronically controlled transmission are changed.

WIRING DIAGRAM

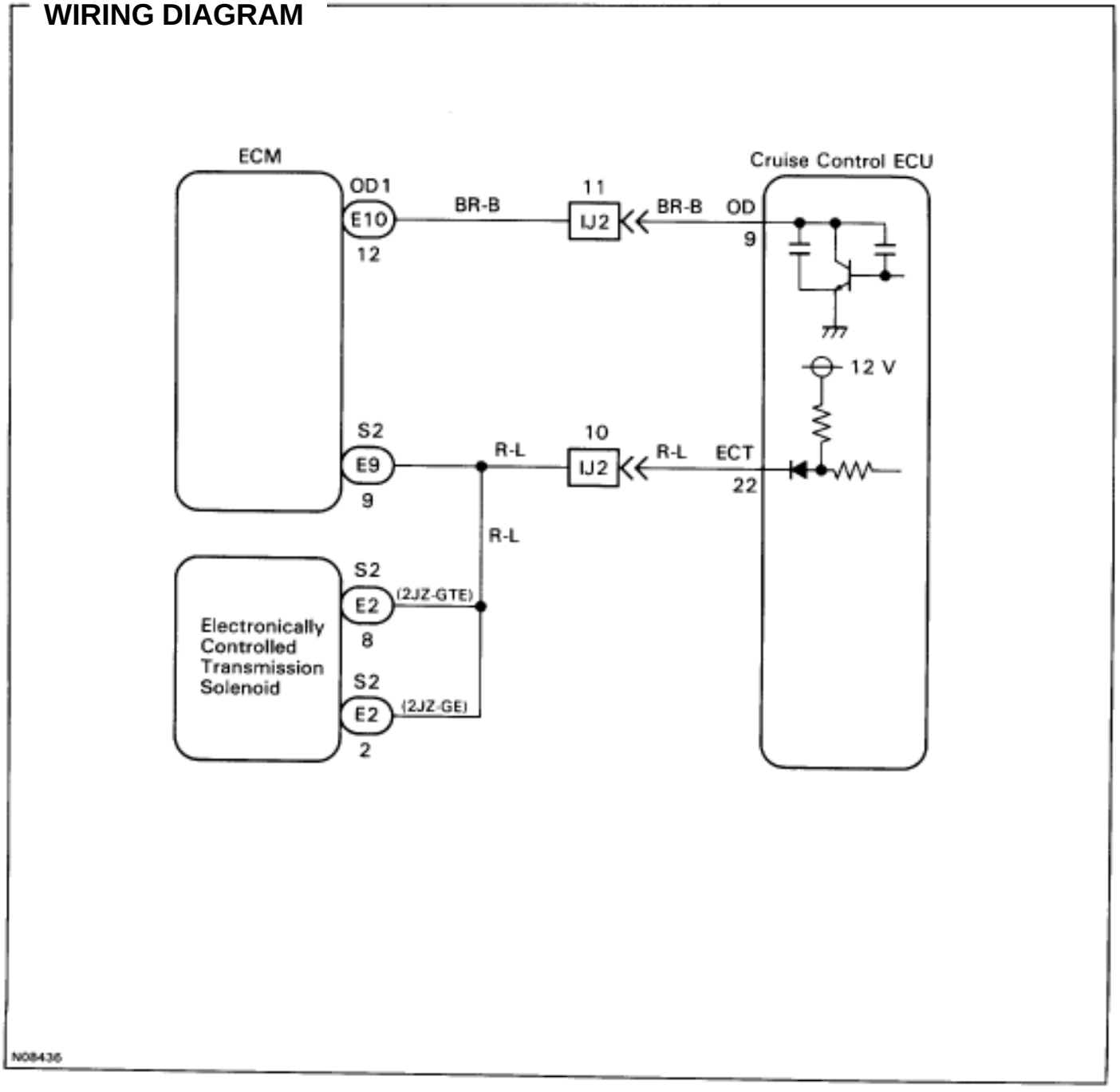

INSPECTION PROCEDURE

1 Check operation of overdrive.

P Test drive after engine warm up.

C Check that overdrive ON ↔ OFF occurs with operation of OD switch ON–OFF.

OK

NG → **Check and Repair Electronically controlled transmission (See AT section).**

2 Check voltage between terminal OD of harness side connector ECU and body ground.

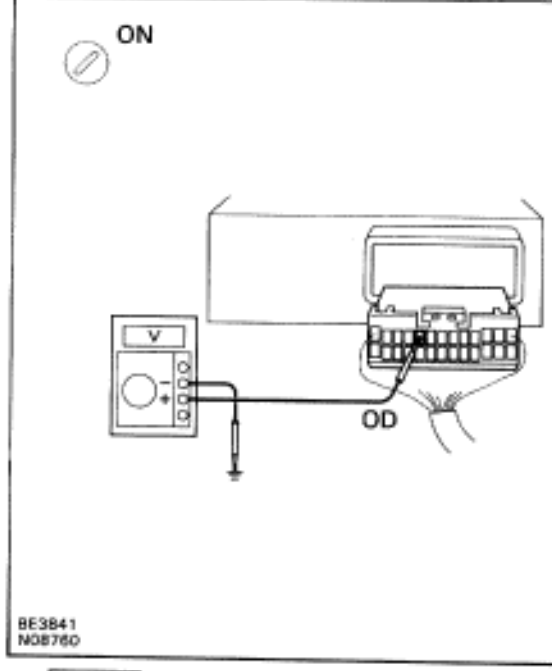

P Remove ECU with connector still connected.

C (1) Disconnect ECU connector.
(2) Turn ignition switch ON.
(3) Measure voltage between terminal OD of harness side connector of ECU and body ground.

OK **Voltage: 10 – 14 V**

OK

NG → **Go to step 5.**

Go to step 3.

3 **Check voltage between terminal ECT of cruise control ECU connector and body ground (On test drive).**

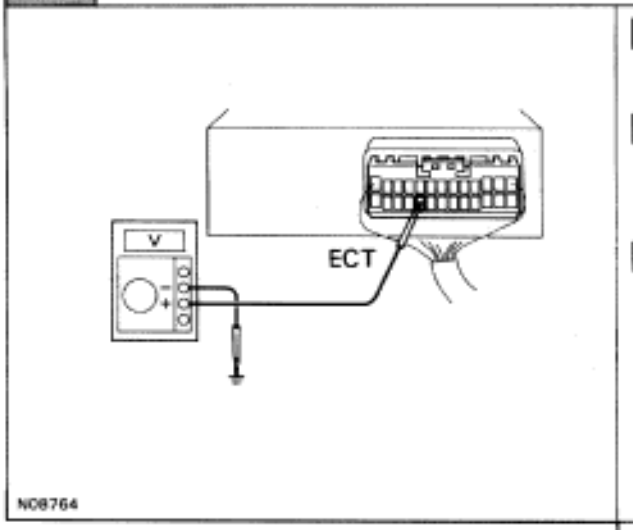

P
(1) Connect ECU connector.
(2) Test drive after engine warm up.

C
Check voltage between terminal ECT of cruise control ECU connector and body ground when OD switch is on and off.

OK

Gear Position	Voltage
O/D	Below 1 V
3rd	10 – 14 V

NG

OK → **Proceed to next circuit inspection shown on matrix chart (**See page BE–170**).**

4 **Check for open and short in harness and connector between terminal ECT cruise control ECU and electronically controlled transmission solenoid**(See page **IN–30**).

OK

NG → **Repair or replace harness or connector.**

Check and repair ECU.

5 **Check for open and short in harness and connector between terminal OD1 of ECU and terminal OD1 of ECM** (See page **IN–30**).

OK

NG → **Repair or replace harness or connector.**

Check and replace ECU.

Parking Brake Switch Circuit

CIRCUIT DESCRIPTION

When the parking brake pedal is depressed, the parking brake switch sends a signal to the ECU. When this signal is input to the ECU during cruise control driving, the ECU cancels cruise control.

WIRING DIAGRAM

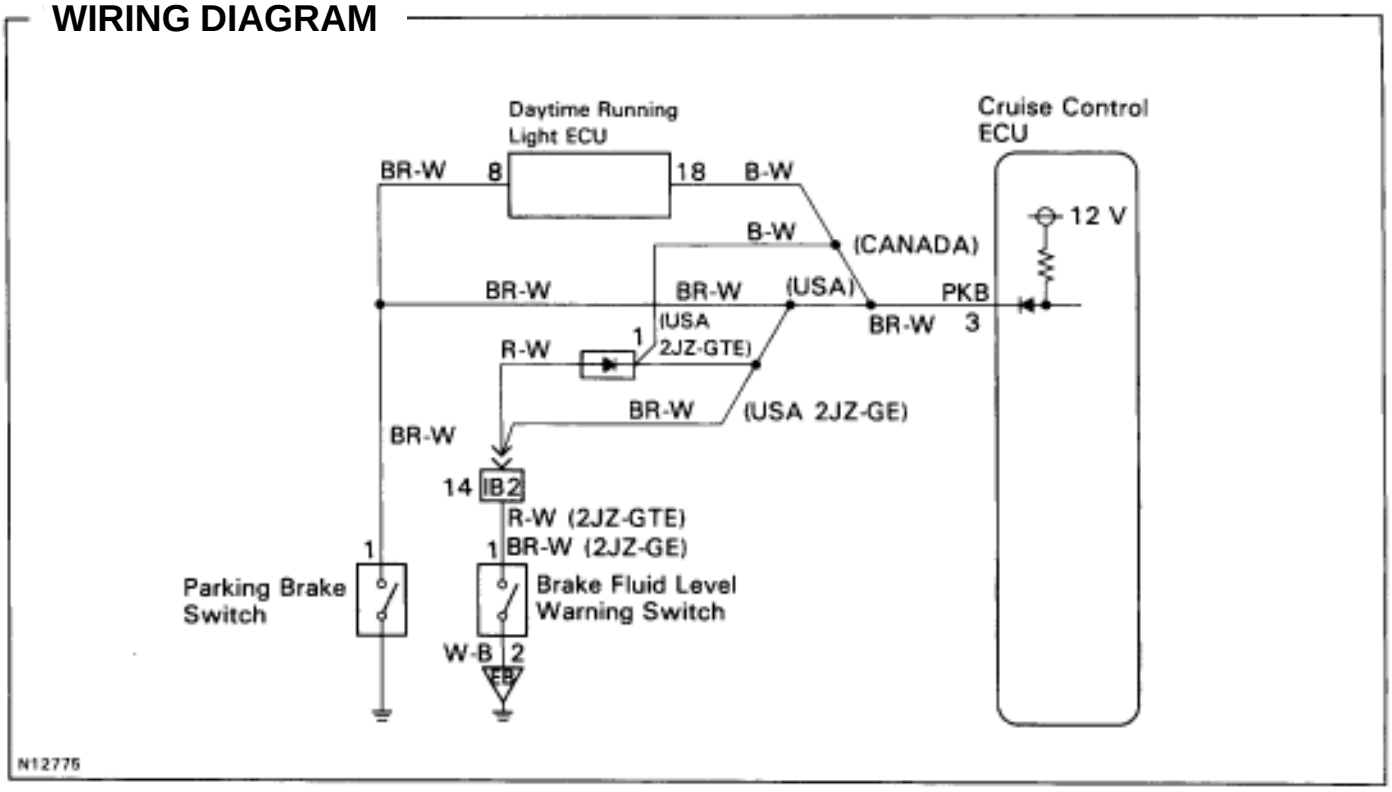

1 Check operation of brake warning light.

C Check that the brake warning light in the instrument panel comes on when the parking brake lever is pulled up with the engine running, and the light goes off when the parking brake lever is released.

OK

NG **Check brake warning light circuit** (See page BE–42).

2 Input signal check.

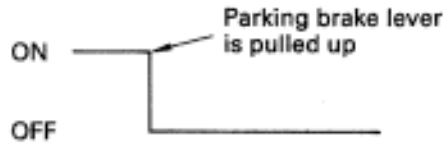

C (1) See input signal check on page BE–169.
(2) Check the indicator light when the parking brake lever is pulled up.

OK **The indicator light goes off when the parking brake lever is pulled up.**

NG

OK **Proceed to next circuit inspection shown on matrix chart** (See page BE–170).

3 Check voltage between terminal PKB of cruise control ECU connector and body ground.

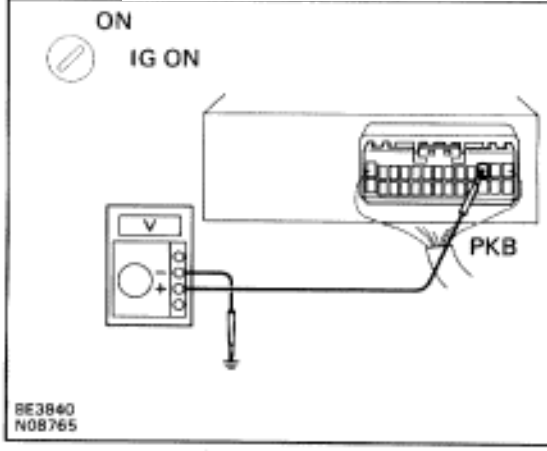

P Remove cruise control ECU with connectors still connected.

C (1) Turn ignition switch ON.
(2) Measure voltage between terminal PKB of cruise control ECU connector and body ground, when the parking brake lever is pulled up and released.

OK

Parking brake lever	Voltage
Pulled up	Below 1 V
Released	10 – 14 V

NG

OK **Proceed to next circuit inspection shown on matrix chart** (See page BE–170).

4 Check for open in harness and connector between cruise control ECU and brake warning light.

OK

NG **Repair or replace harness or connector.**

Check and replace cruise control ECU.

Park Neutral Position Switch Circuit

CIRCUIT DESCRIPTION

When the shift position is put in EXCEPT D RANGE, a signal is sent from the park/neutral position switch to the ECU. When this signal is input during cruise control driving, the ECU cancels the cruise control

WIRING DIAGRAM

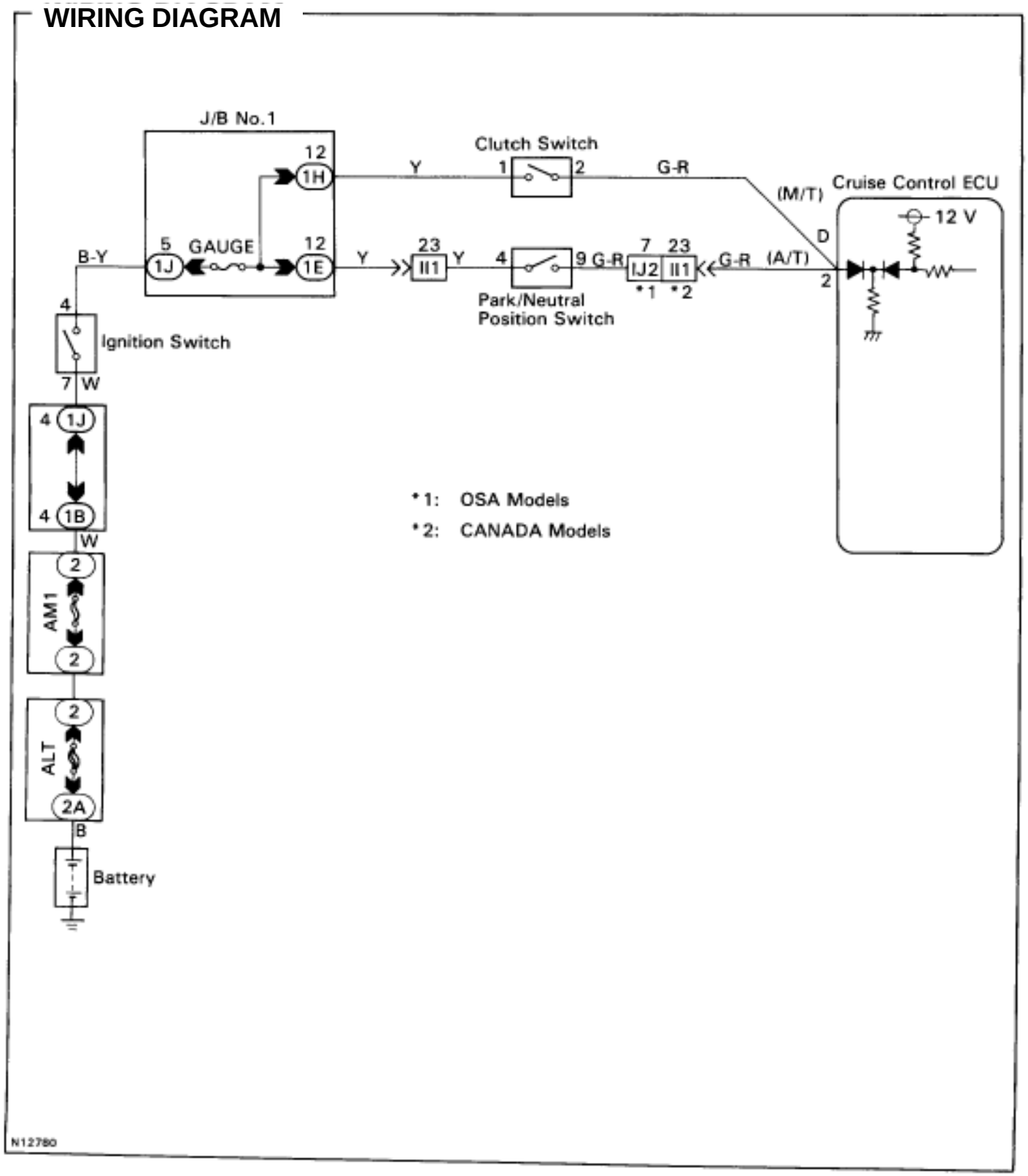

INSPECTION PROCEDURE

1 Check operation of starter.

C Check that the starter operates normally and that the engine starts.

OK

NG → Proceed to engine troubleshooting (See page EG–381 or EG–487.)

2 Input signal check.

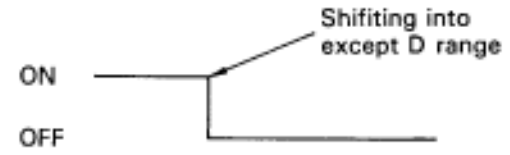

P (1) See input signal check on page BE–169.
(2) Check the indicator light when shifting into except D position.

OK The indicator light goes off when shifting into except D range.

NG

OK → **Proceed to next circuit inspection shown on matrix chart** (See page BE–170).

3 Check voltage between terminal D of ECU connector and body ground.

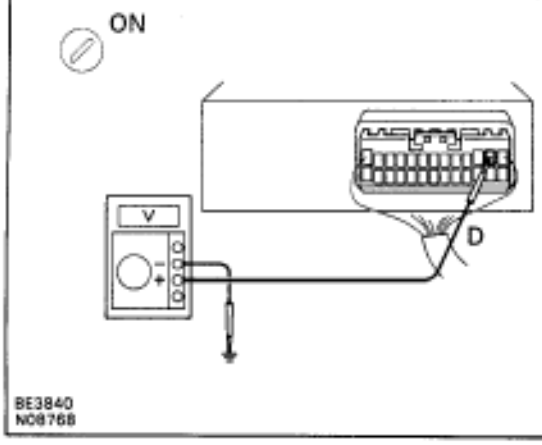

P Remove ECU with connectors still connected.

C (1) Turn ignition switch ON.
(2) Measure voltage between terminal D of ECU connector and body ground, when shifting into P, N position and other positions.

OK

Shift Position	Voltage
D range	10 – 14 V
Other ranges	Below 1 V

NG

OK → **Proceed to next circuit inspection shown on matrix chart** (See page BE–170).

4 Check for open in harness and connector between ECU and ST fuse (See page IN–30).

OK

NG → **Repair or replace harness or connector.**

Check and replace ECU.

ECU Power Source Circuit

CIRCUIT DESCRIPTION

The ECU power source supplies power to the actuator and sensors, etc. Terminal GND and the cruise control ECU case are grounded.

WIRING DIAGRAM

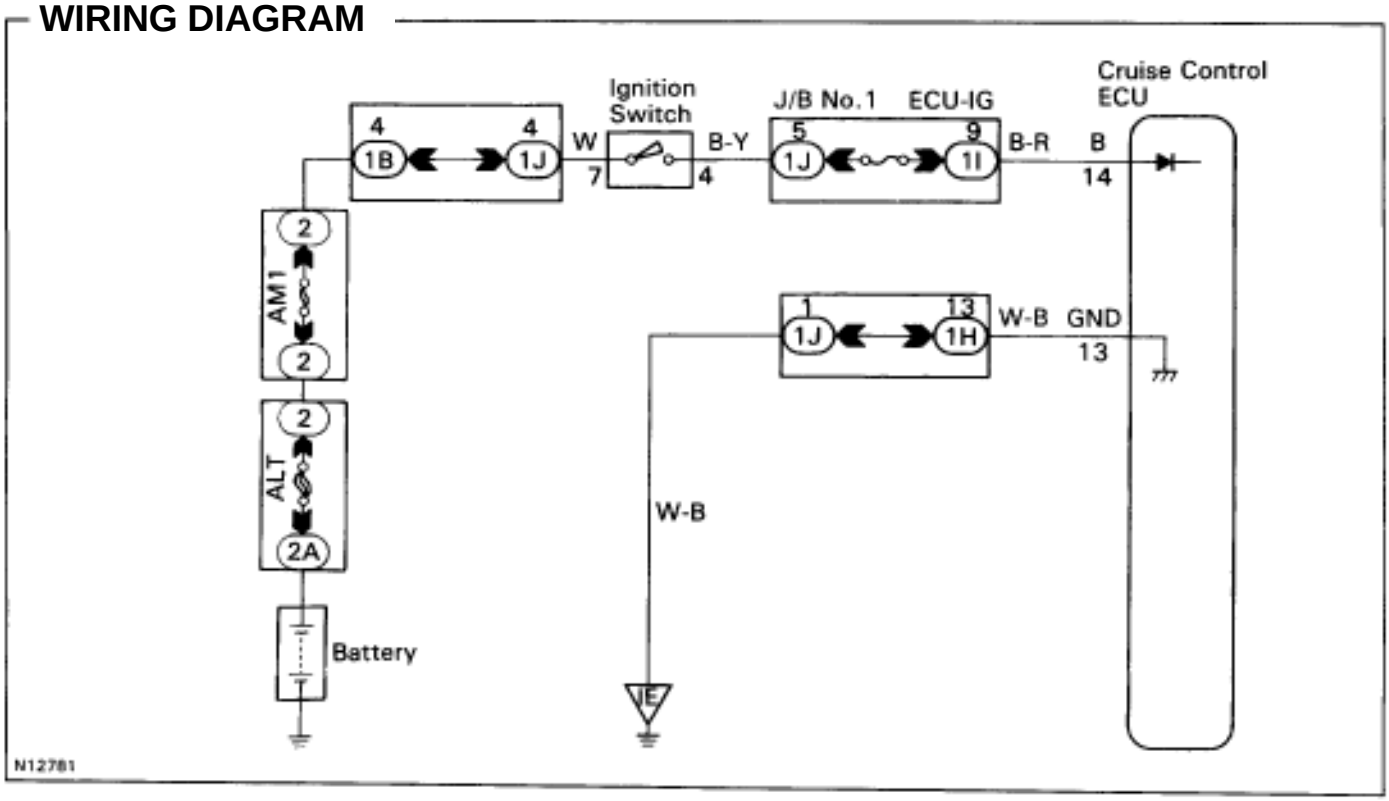

INSPECTION PROCEDURE

1 **Check ECU–IG fuse.**

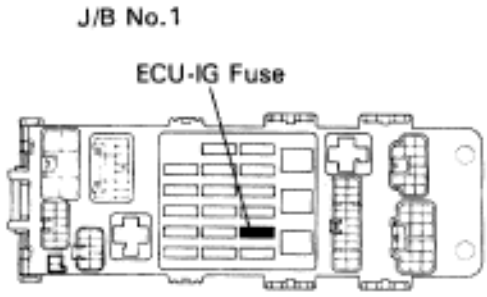

P Remove ECU–IG fuse from J/B No.1.

OK Check continuity of ECU–IG fuse.

OK **Continuity**

OK

NG **Check for short in all the harness and components connected to the ECU–IG fuse (See attached wiring diagram).**

2 Check voltage between terminals +B and GND of ECU connector.

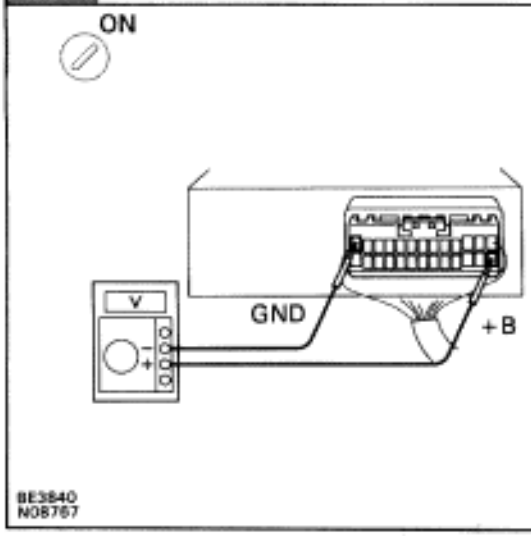

P Remove ECU with connectors still connected.

C (1) Turn ignition switch ON.
(2) Measure voltage between terminals +B and GND of ECU connector.

OK **Voltage: 10 – 14 V**

NG

OK → **Proceed to next circuit inspection shown on matrix chart** (See page BE–170).

3 Check continuity between terminal GND of ECU connector and body ground.

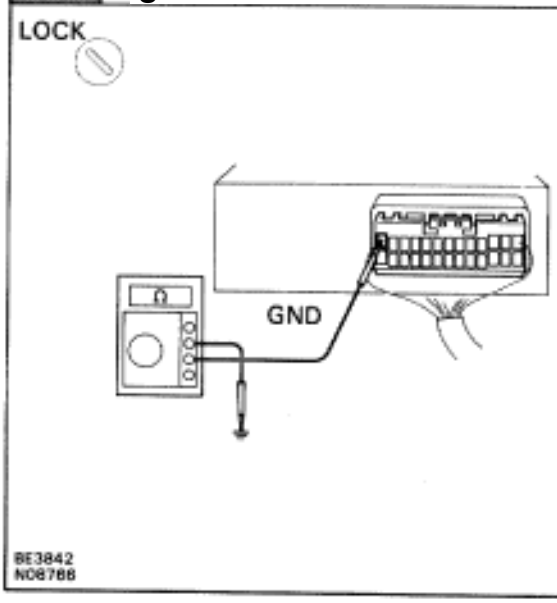

C Measure resistance between terminal GND of cruise control ECU connector and body ground.

OK **Resistance: 1 Ω or loss**

OK

NG → **Repair or replace harness or connector.**

Check and repair harness and connector between battery and ECU.

Back up Power Source Circuit

CIRCUIT DESCRIPTION

The ECU back–up power source provides power even when the ignition switch is off and is used for diagnostic code memory, etc.

WIRING DIAGRAM

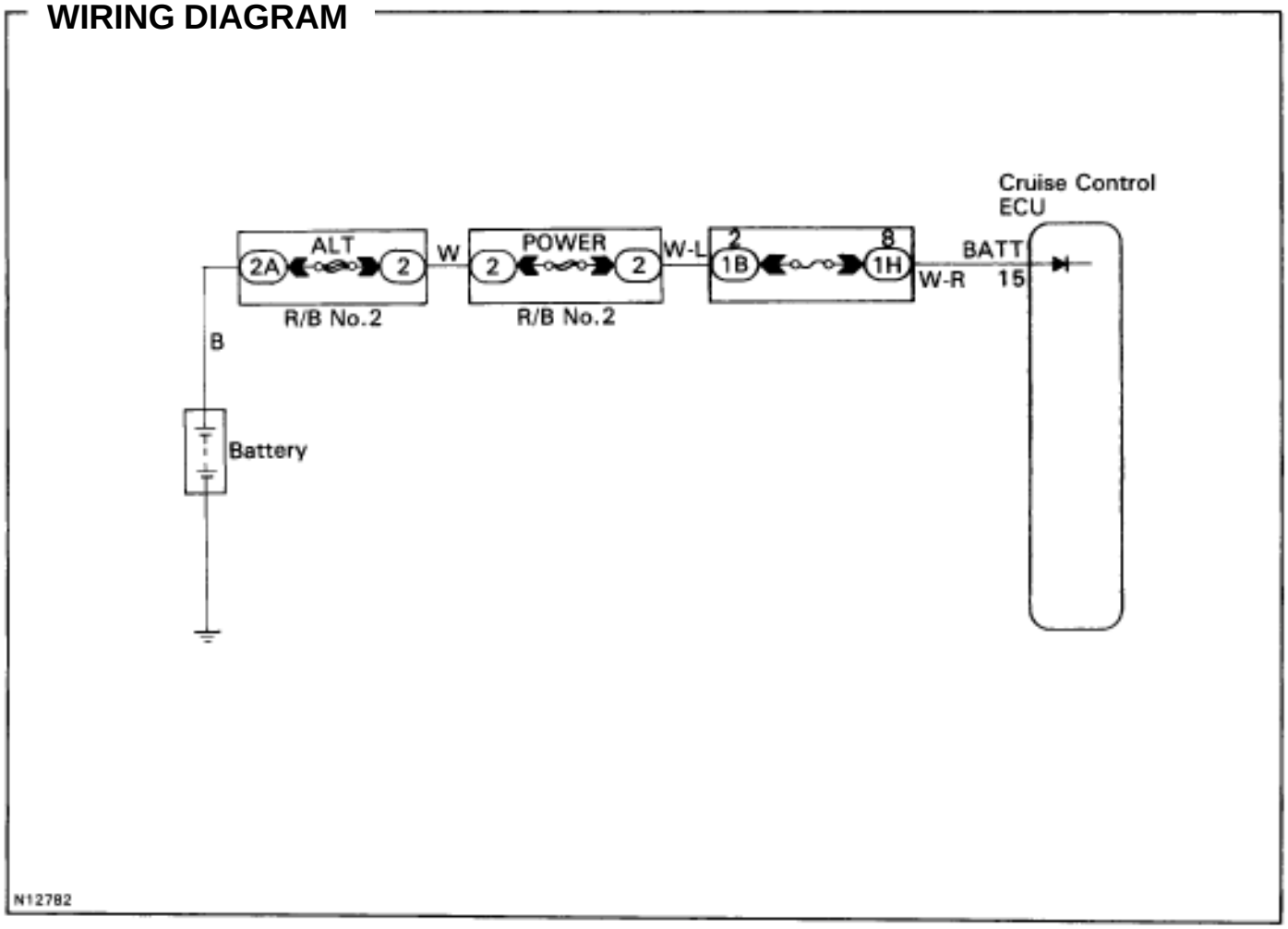

INSPECTION PROCEDURE

1 Check ECU–B fuse.

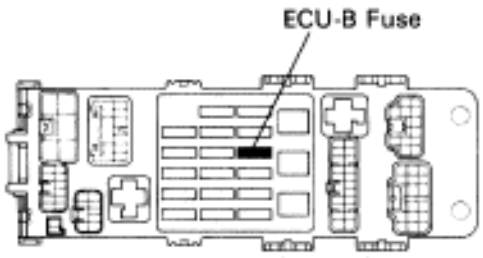

N08843

P Remove ECU–B fuse from R/B No.2.

C Check continuity of ECU–B fuse.

OK **Continuity**

OK

NG **Check for short in all the harness and components connected to the ECU–B fuse (See attached wiring diagram).**

2 Check continuity between terminal BATT of ECU connector and body ground.

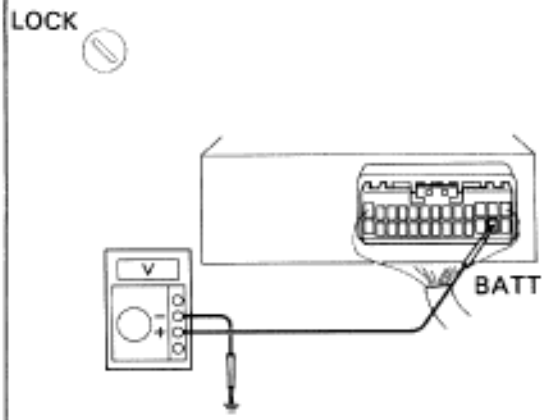

BE3842
N08758

P Remove ECU with connectors still connected.

C Measure voltage between terminal BATT of ECU connector and body ground.

OK **Voltage: 10 – 14 V**

NG

OK **Proceed to next circuit inspection shown on matrix chart** (See page BE–170).

Check and repair harness and connector between battery and ECU.

Main Switch Circuit (Cruise Control Switch)

CIRCUIT DESCRIPTION

When the cruise control main switch is turned off, the cruise control does not operate.

WIRING DIAGRAM

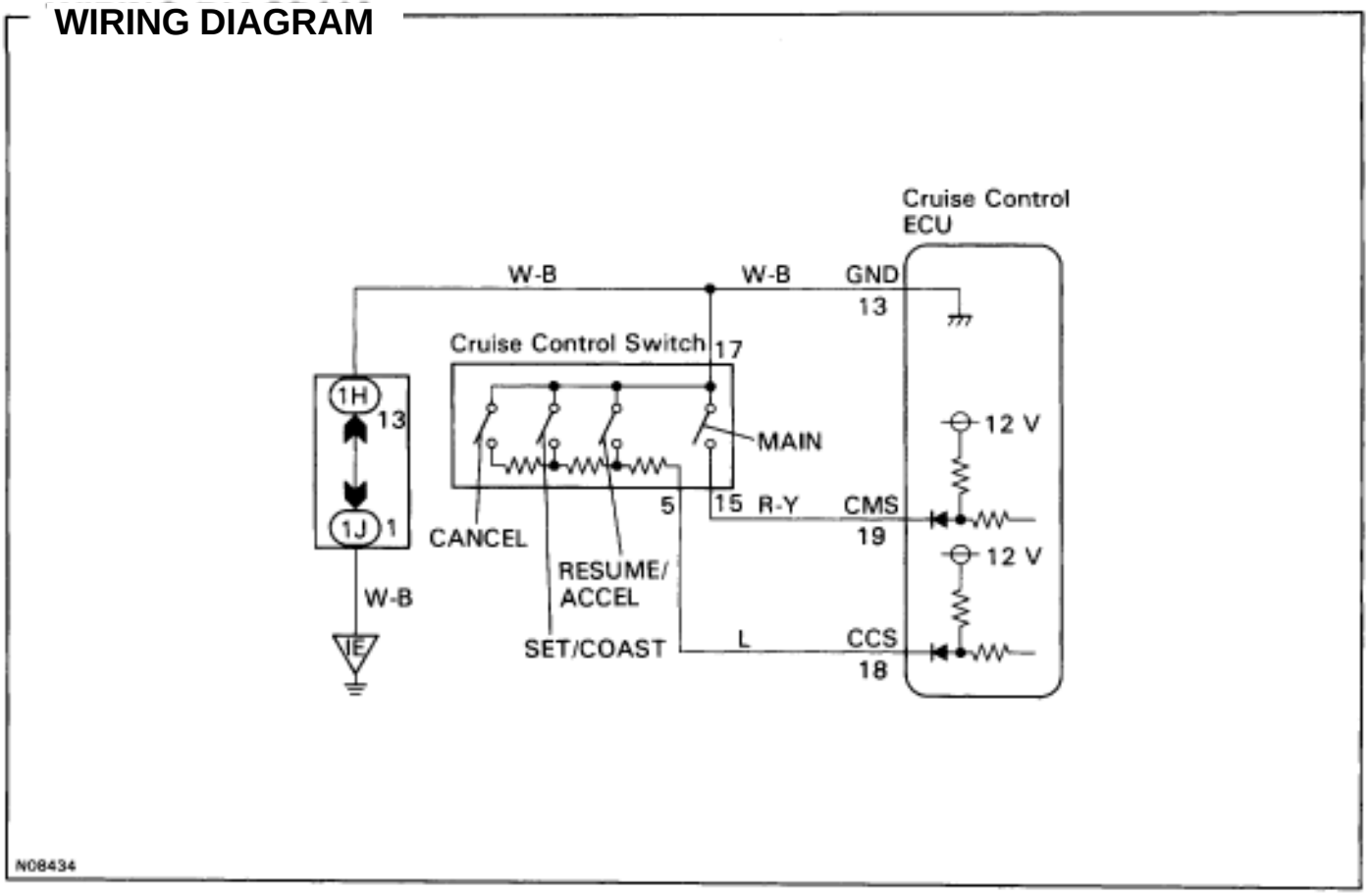

1 Check voltage between terminal CMS and GND of cruise control ECU connector

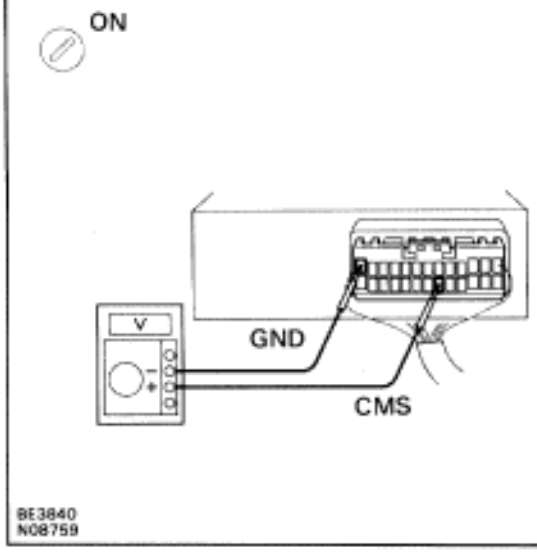

P Remove cruise control ECU with connectors still connected.

C
(1) Turn ignition switch ON.
(2) Measure voltage between terminal CMS and GND of cruise control ECU connector when main switch is held on and off.

OK

Main switch	Voltage
OFF	10 – 14 V
ON	Below 2 V

NG

OK **Proceed to next circuit inspection shown on matrix chart** (See page BE–170).

2 Check main switch.

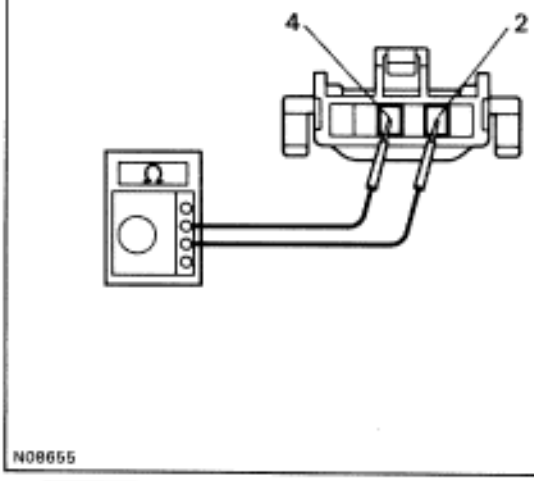

P
(1) Remove steering wheel center pad (See page RS Section).
(2) Disconnect cruise control switch connector.

C Check continuity between terminals 2 and 4 of cruise control switch connector when main switch is held on and off.

OK

○—○ Continuity

Terminals / Main switch	2	4
OFF		
Hold ON	○	○

OK

NG **Replace control switch.**

3 Check harness and connector between cruise control ECU and main switch, main switch and body ground. (See page IN–30).

OK

NG **Repair or replace harness or connector.**

Check and replace cruise control ECU.

TC Circuit

CIRCUIT DESCRIPTION

This circuit sends a signal to the ECU that diagnostic code output is required.

WIRING DIAGRAM

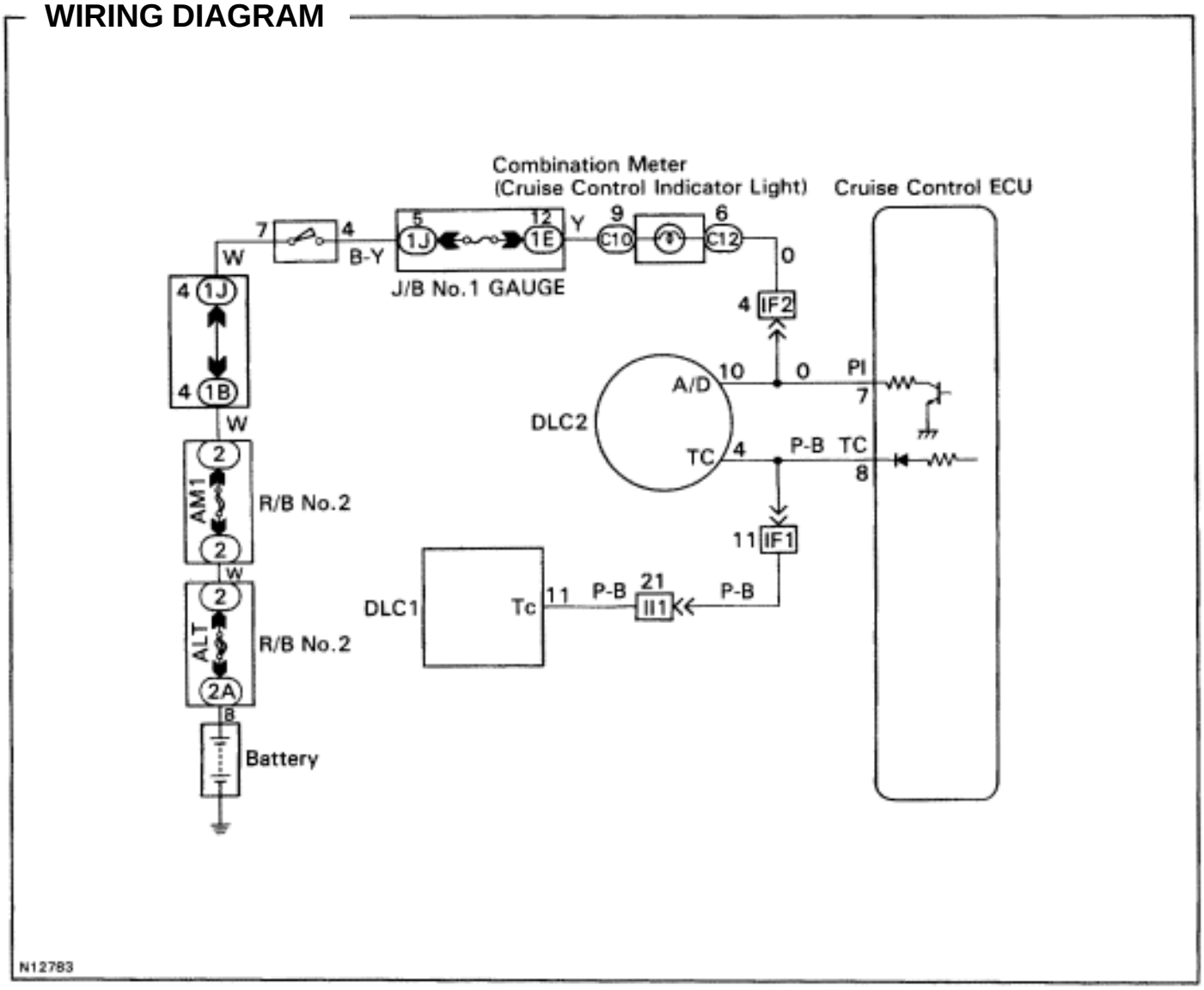

INSPECTION PROCEDURE

1 **Check voltage between terminals Tc and E1 of DLC.**

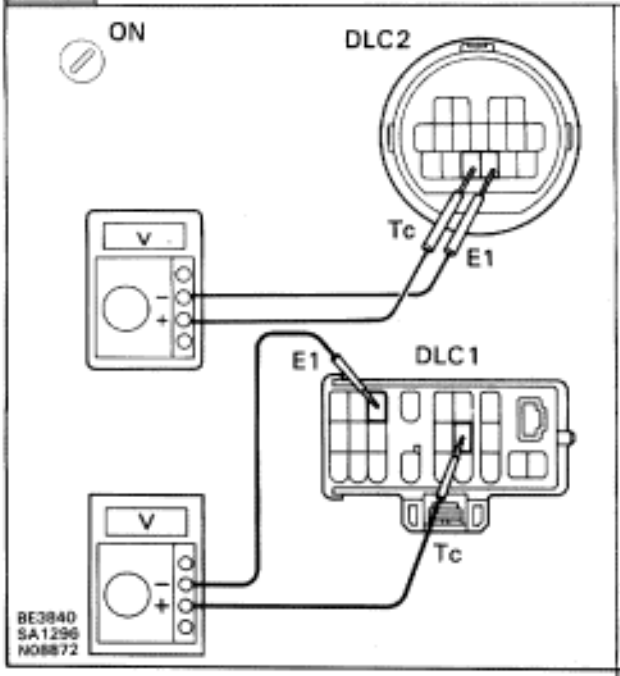

C
(1) Turn ignition switch ON.
(2) Measure voltage between terminals Tc and E1 of DCL.

OK **Voltage: 10 – 14 V**

NG

OK → **Proceed to next circuit inspection shown on matrix chart** (See page BE–170).

2 **Check for open and short in harness and connector between ECU and TDCL, TDCL and body ground.** (See page **IN–30**).

OK

NG → **Repair or replace harness or connector.**

Check and replace ECU.

SERVICE SPECIFICATIONS

SERVICE DATA

INTEGRATION RELAY (Light Auto Cut System)	
B2 – Ground (Constant)	Battery positive voltage
B3 – Ground (Constant)	Battery positive voltage
A7 – Ground (Ignition SW position LOCK or ACC)	No voltage
A7 – Ground (Ignition SW position ON)	Battery positive voltage
A1 – Ground (Constant)	Battery positive voltage
DAYTIME RUNNING LIGHT MAIN RELAY (Wire Harness Side)	
2 – Ground (Ignition SW position LOCK or ACC)	No voltage
2 – Ground (Ignition SW position ON)	Battery positive voltage
11 – Ground (Engine stop)	No voltage
11 – Ground (Engine running)	Battery positive voltage
15 – Ground (Constant)	Battery positive voltage
17 – Ground (Constant)	Battery positive voltage
TURN SIGNAL FLASHER	
Flashes/Minute	60 – 120
INTEGRATION RELAY (Interior Light System)	
9 – Ground (Ignition SW position LOCK or ACC)	No voltage
9 – Ground (Ignition SW position ON)	Battery positive voltage
1 – Ground (Constant)	Battery positive voltage
SPEEDOMETER (USING A SPEEDOMETER TESTER)	
Standard indication (mph)	Allowable range (mph)
20	18 – 24
40	38 – 44
60	58 – 66
80	78 – 88
100	98 – 110
120	118 – 132
Standard indication (km/h)	Allowable range (km/h)
20	17 – 24
40	38 – 46
60	57.5 – 67
80	77 – 88
100	96 – 109
120	115 – 130
140	134 – 151.5
160	153 – 173

TACHOMETER (ON–VEHICLE)	
Standard indication (rpm)	Allowable range (rpm)
700	630 – 770
1000	915 – 1115
2000	1920 – 2220
3000	2890 – 3350
4000	3940 – 4400
5000	5025 – 5425
6500	6650 – 6950
7000	7025 – 7625
OD/TRIP METER (CONNECTOR CONNECTED)	
1 – Ground (Ignition SW position ON)	Battery positive voltage
4 – Ground (Light Control SW position TAIL or HEAD)	Battery positive voltage
5 – 7 (Ignition SW ON and drive the vehicle slowly)	OV ↔ Battery positive voltage
6 – 7 (Ignition SW ON and drive the vehicle slowly)	OV ↔ more than 5V
8 – Ground (Constant)	Battery positive voltage
10 – Ground (Ignition SW ON, Light Control SW TAIL or HEAD and turn the Light Control Rheostat knob to clockwise)	6V → 0V
FUEL RECEIVER GAUGE	
A – B	Approx. 269.7 Ω
A – C	Approx. 123.5 Ω
B – C	Approx. 146.2 Ω
FUEL SENDER GAUGE	
Float position: F	Approx. 4.0 Ω
Float position: 1/2	Approx. 55.0 Ω
Float position: E	Approx. 107.0 Ω
ENGINE COOLANT TEMPERATURE RECEIVER GAUGE	
A – B	Approx. 229.7 Ω
A – C	Approx. 54.0 Ω
B – C	Approx. 175.7 Ω
ENGINE COOLANT TEMPERATURE SENDER GAUGE	
50 °C (122.0 °F)	160 – 240 Ω
120 °C (248.0 °F)	17.1 – 21.2 Ω
LIGHT FAILURE SENSOR	
3 – Ground (Light Control SW position OFF)	No voltage
3 – Ground (Light Control SW position TAIL or HEAD)	Battery positive voltage
4 – Ground (Ignition SW position LOCK or ACC)	No voltage
4 – Ground (Ignition SW position ON)	Battery positive voltage
7 – Ground (Stop Light SW position OFF)	No voltage
7 – Ground (Stop Light SW position ON)	Battery positive voltage
8 – Ground (Engine stop)	No voltage
8 – Ground (Engine running)	Battery positive voltage
INTEGRATION RELAY (Seat Belt Warning)	
1 – Ground (Constant)	Battery positive voltage
9 – Ground (Ignition SW LOCK or ACC)	No voltage
9 – Ground (Ignition SW ON)	Battery positive voltage

ANTENNA MOTOR CONTROL RELAY (Wire Harness Side)	
1 – Ground (Constant)	Battery positive voltage
4 – Ground (Ignition SW position ON)	Battery positive voltage
5 – Ground (Ignition SW position ACC or ON)	Battery positive voltage
7 – Ground (Ignition SW position ACC or ON and radio SW ON)	Battery positive voltage
8 – Ground (Ignition SW position ACC or ON)	Battery positive voltage

BODY

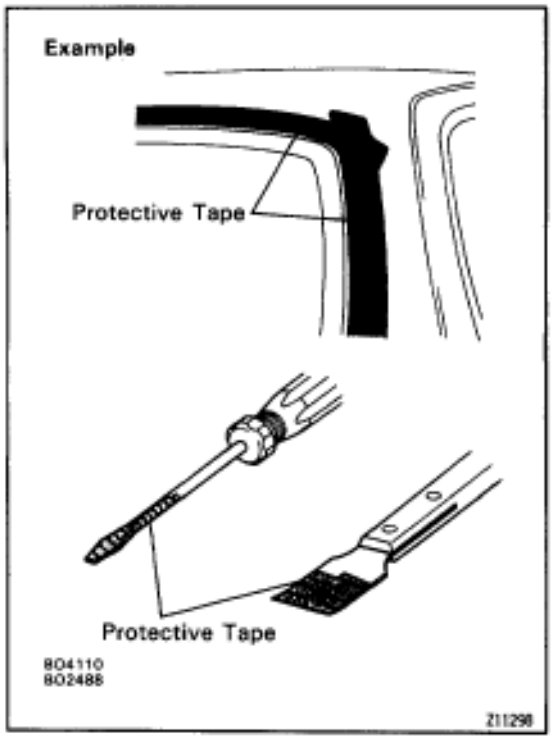

GENERAL INFORMATION

HANDLING PRECAUTIONS

Taping

When it is possible that the body or parts may be scratched during the operation, apply protective tape before starting work.

Example:

1. Before starting work, apply protective tape to body surfaces around parts to be removed and installed.
2. Before prying parts loose with a screwdriver or scraper etc., apply protective tape to the tip of the tool to avoid scratching parts or painted surfaces of the body.

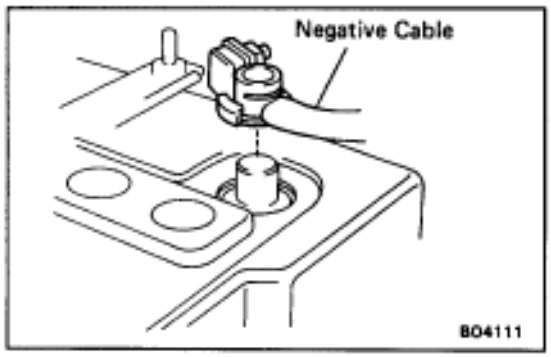

Battery

In order to prevent a short circuit while doing work on the electrical circuit such as disconnecting a connector, first turn off the ignition switch and disconnect the negative (–) terminal cable from the battery before starting work.

HINT: When battery voltage is required for operation of a functioning part, connect the cable to the battery when needed, and promptly disconnect it when no longer necessary.

CAUTION:

- **Work must be started after 90 seconds from the time the ignition switch is turned to the "LOCK" position and the negative (–) terminal cable is disconnected from the battery.**
- **To avoid erasing the memory of each memory system, never use a back–up power supply from outside the vehicle.**

Fitting Adjustments

When removing and installing body panels which have a preload value, after installation refer to the page containing the installation adjustment methods, and make adjustments according to the required specifications.

HINT: When making adjustments, do not completely loosen the bolts and nuts of the part being adjusted. Tighten them appropriately, and move the panels by hand to align them.

CLIPS

The removal and installation methods of typical clips used in body parts are shown in the table below.

HINT: If the clip is damaged during the operation, always replace it with a new clip.

Shape (Example)	Removal/Installation
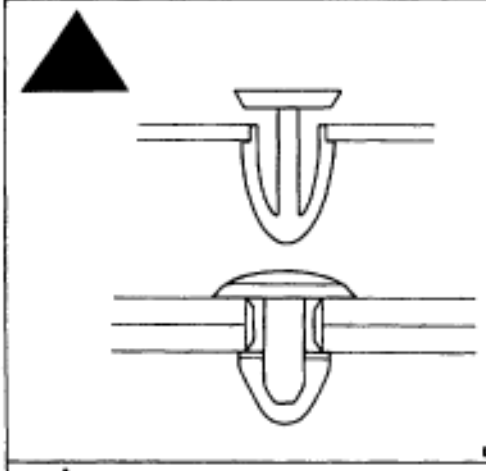	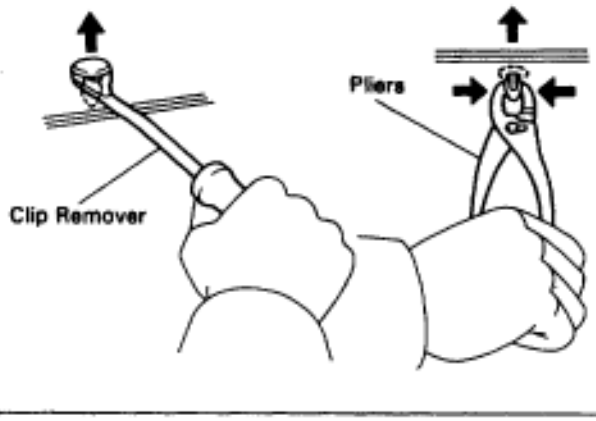
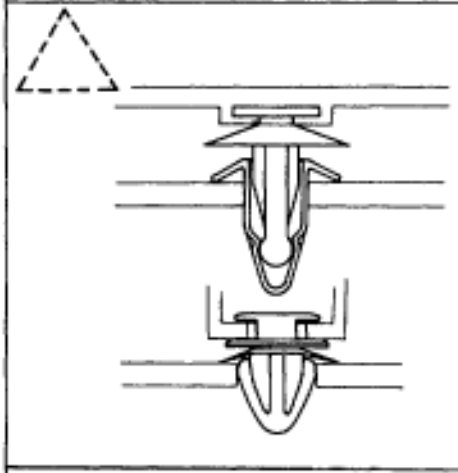	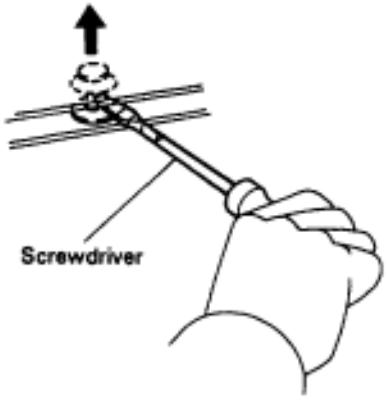
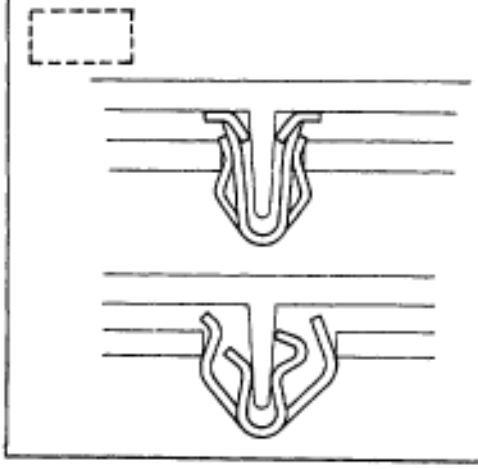	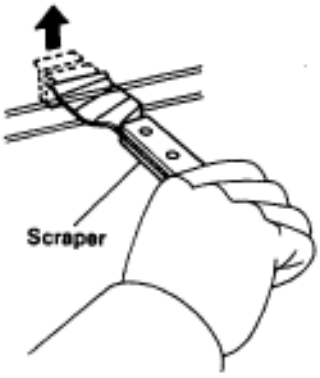

CLIPS (Cont'd)

Shape (Example)	Removal/Installation
 B04122	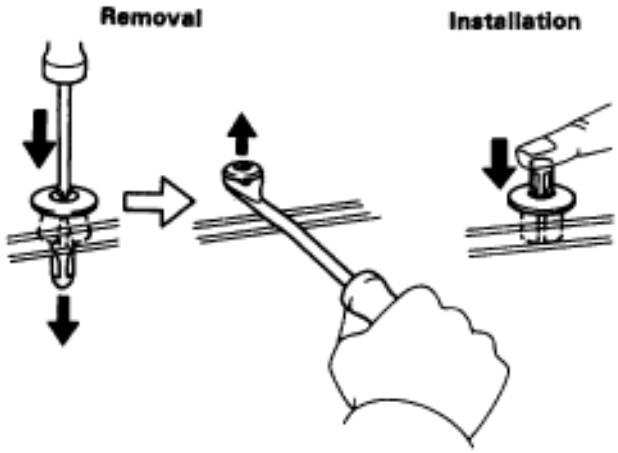 B04123
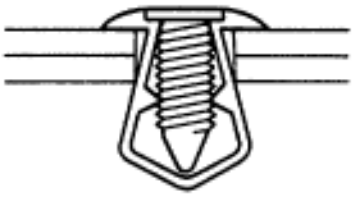 B04124	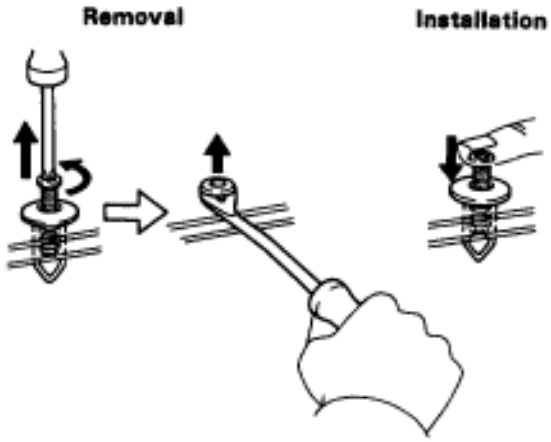 B04125

SRS (Supplemental Restraint System)

The 1995 SUPRA is equipped with an SRS, such as the driver airbag and front passenger airbag assembly. Failure to carry out service operations in the correct sequence could cause the SRS to deploy, possibly leading to a serious accident.

When removing or installing of airbag parts and the yellow wire harness and connector for the airbag is necessary, refer to the precautionary notices in the RS section before performing the operation.

- Work must be started after 90 seconds from the time the ignition switch is set to the LOCK position and the negative (–) terminal cable is disconnected from the battery.
  (The SRS is equipped with a back–up power source so that if work is started within 90 seconds of disconnecting the negative (–) terminal cable of the battery, the SRS may deploy.)
- To avoid erasing the memory of each memory system, never use a back–up power supply from outside the vehicle.
- Before repairs, remove the airbag sensors if shocks are likely to be applied to the sensors during repairs.
- The front airbag sensor set bolt has been anti–rust treated. When the sensor is removed, always replace the set bolt with a new one.
- If the front airbag sensors, center airbag sensor assembly, steering wheel pad or front passenger airbag assembly have been dropped, or if there are cracks, dents or other defects in the case, bracket or connector, replace them with new ones.
- Never use SRS parts from another vehicle. When replacing parts, replace them with new parts.
- Do not expose the front airbag sensors, center airbag sensor assembly, steering wheel pad or front passenger airbag assembly directly to hot air or flames.
- The SRS wire harness is integrated with the cowl wire harness assembly. The wires for the SRS wire harness are encased in a yellow corrugated tube. All the connectors for the system are also a standard yellow color. If the SRS wire harness becomes disconnected or the connector becomes broken due to an accident, etc., repair or replace it. (See RS section)
- The steering wheel must be fitted correctly to the steering column with the spiral cable at the neutral position; otherwise, cable disconnection and other troubles may result. Refer to RS section of this manual concerning correct steering wheel installation.
- When removing or handling the steering wheel pad or front passenger airbag assembly, it should be placed with their top surface facing up. In this case, the twin–lock type connector lock lever should be in the locked state and care should be taken to place it so the connector will not be damaged. (Storing the pad with its metallic surface up, the front passenger airbag assembly with the airbag door facing down may lead to a serious accident if the airbag inflates for some reason.)
- Grease should not be applied to the steering wheel pad or the front passenger airbag assembly, and they should not be cleaned with detergents of any kind.
- Store the steering wheel pad or the front passenger airbag assembly where the ambient temperature remains below 93˚C (200˚F), without high humidity and away from electrical noise.
- Information labels are attached to the periphery of the SRS components. Follow the notices.
- When the ignition switch is at ACC or ON and the SRS warning light remains on, the center airbag sensor assembly has detected a malfunction code. (See RS section)

PREPARATION

SST (SPECIAL SERVICE TOOLS)

	09812–00010	Door Hinge Set Bolt Wrench	Door side hinge bolt adjustment
	09812–00020	Door Hinge Set Bolt Wrench	Body side hinge bolt adjustment
	09806–30010	Windshield Moulding Remover	

LUBRICANT

Item	Capacity	Classification
MP grease	—	—

SSM (SPECIAL SERVICE MATERIALS)

08833–00090	Adhesive 1131, THREE BOND 1131, LOCTITE 518 or equivalent	Front door Back door
08850–00070	Windshield glass adhesive set No.15 or equivalent	Windshield Quarter window glass Back door moulding and glass (0–15˚C or 32–59˚F)
08850–00080	Windshield glass adhesive set No.35 or equivalent	Windshield Quarter window glass Back door moulding and glass (15–35˚C or 59–95˚F)
08850–00090	Windshield glass adhesive set No.45 or equivalent	Windshield Quarter window glass Back door moulding and glass (35–45˚C or 95–113˚F)
08833–00030	Auto glass sealer or equivalent	Windshield moulding and glass Quarter window moulding and glass Back door moulding and glass
08850–00065	Butyl Tape Set	Roof side rail weatherstrip
08826–00080	Seal Packing Black or equivalent (FIPG)	Roof drip side finish moulding Roof side rail weatherstrip retainer

Ambient temperature	Part. No.	Part Name
0–15°C (32–59°F)	08850–00070	Windshield glass adhesive set No. 15
15–35°C (59–95°F)	08850–00080	Windshield glass adhesive set No. 35
35–45°C (95–113°F)	08850–00090	Windshield glass adhesive set No. 45

1. CHOOSE SUITABLE ADHESIVE SET

Use an adhesive set suitable for the ambient temperature.

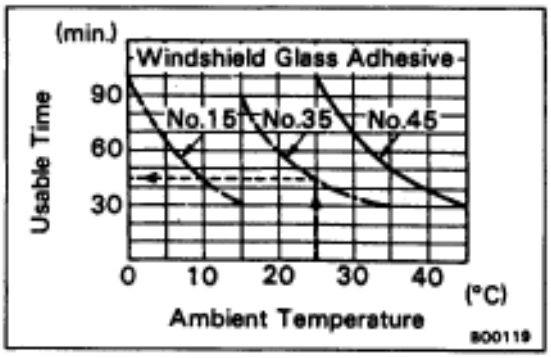

2. CHECK ADHESIVE'S USABLE TIME

After mixing main and hardening agents, finish glass installation within the specified time as shown.

Example: For glass installation in an ambient temperature of 25˚C (77˚F), apply adhesive set No.35 within 45 minutes.

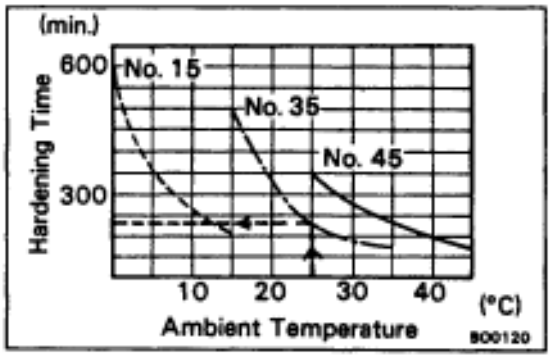

3. CHECK ADHESIVE HARDENING TIME

After main and hardening agents are mixed, leak tests should be made only after the hardening time has elapsed.

Example: The hardening time for adhesive set No.35 in an ambient temperature of 25˚C (77˚F) is 2 and 1/ 2 hours.

NOTICE: Do not drive the vehicle until at least double the hardening time has elapsed.

FRONT BUMPER
COMPONENTS

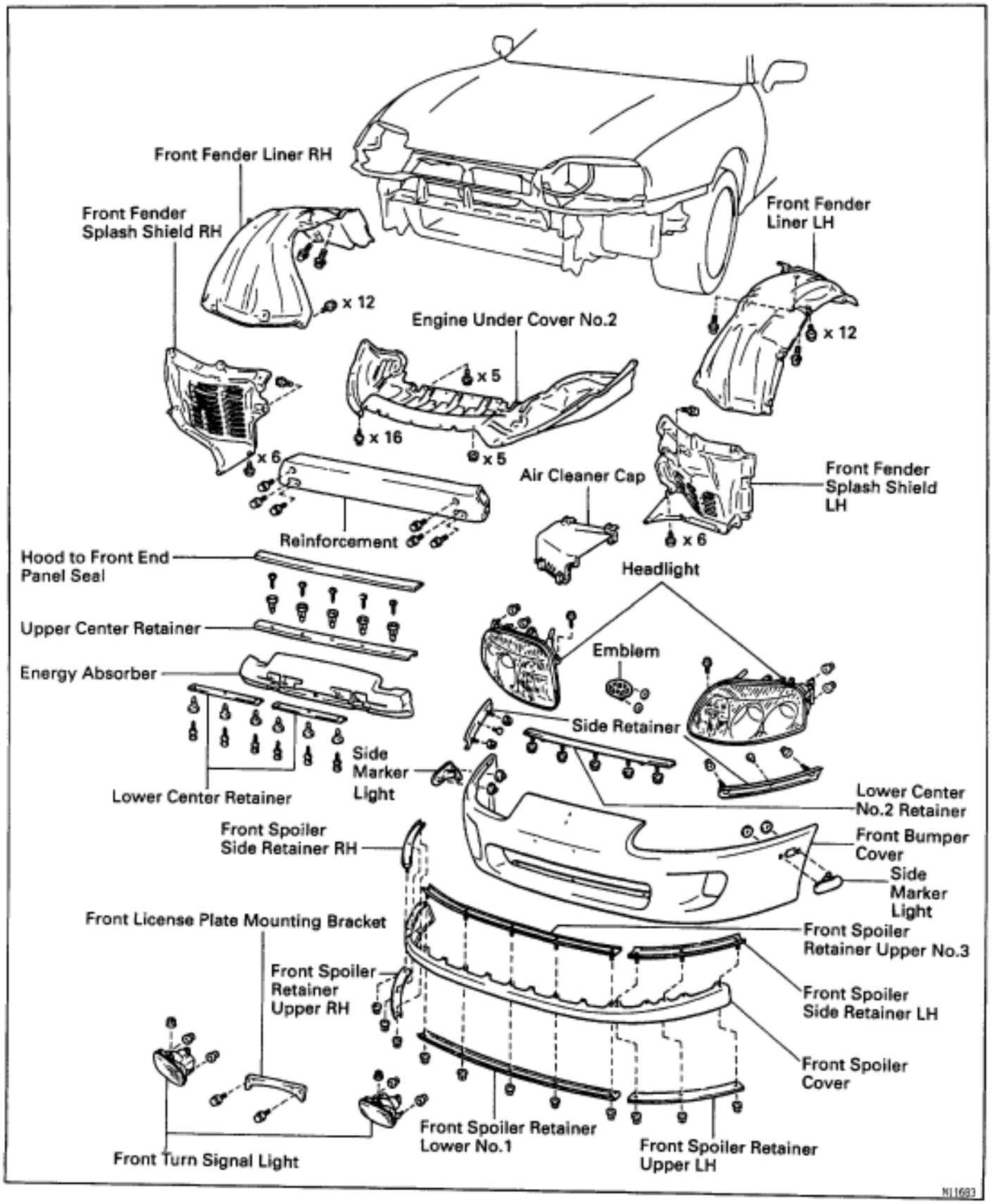

REAR BUMPER
COMPONENTS

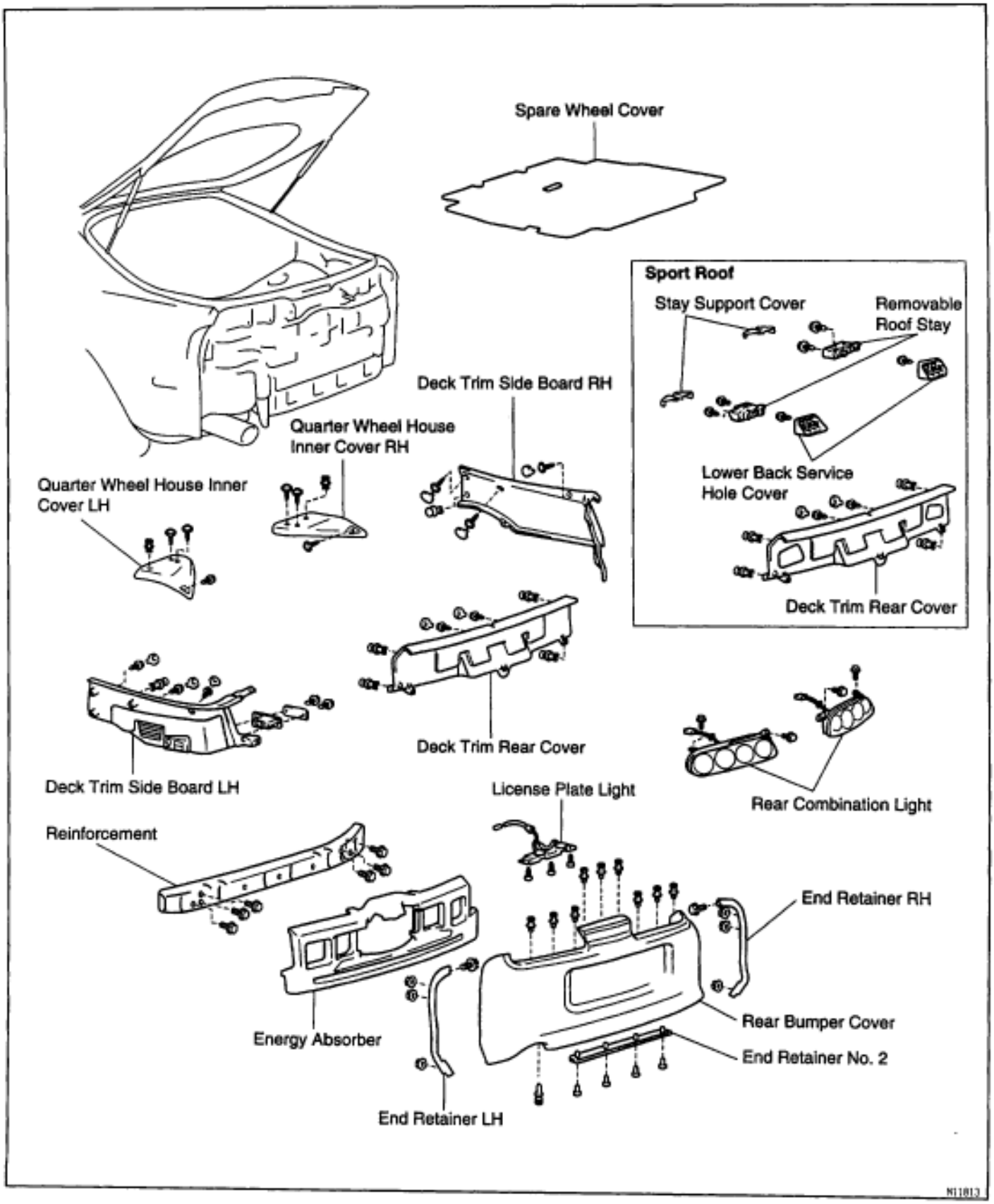

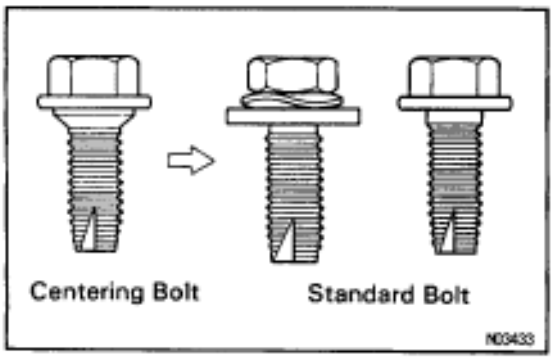

HOOD

HOOD ADJUSTMENT

HINT: Since the centering bolt is used as the hood hinge and lock set bolt, the hood and lock cannot be adjusted with it on. Substitute the standard bolt for the centering bolt.

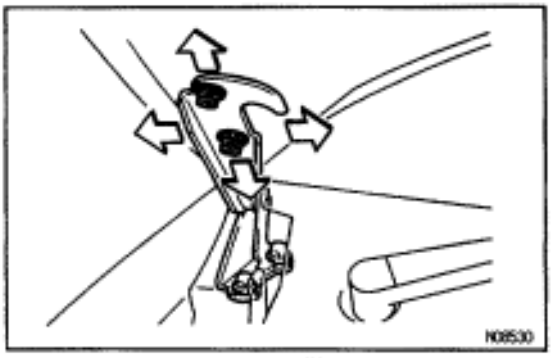

1. ADJUST HOOD IN FORWARD / REARWARD AND LEFT/RIGHT DIRECTIONS

Adjust the hood by loosening the hood side hinge bolts.

Torque: 13 N·m (130 kgf·cm, 9.4 ft·lbf)

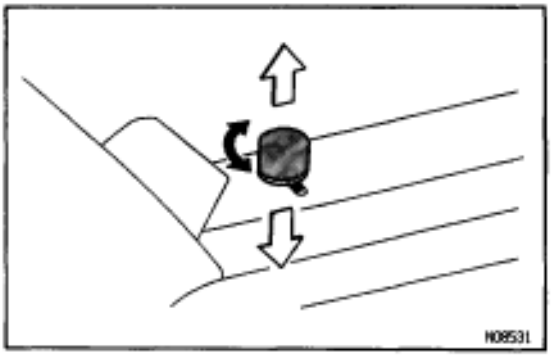

2. ADJUST FRONT EDGE OF HOOD IN VERTICAL DIRECTIONS

Adjust the hood by turning the cushions.

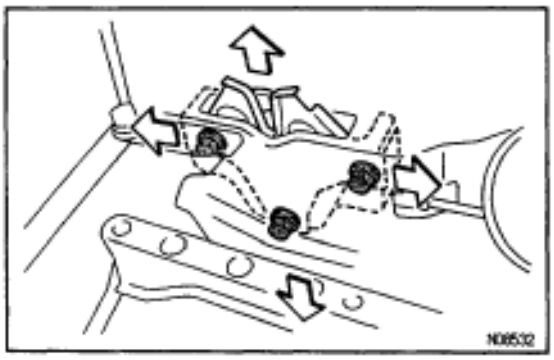

3. ADJUST HOOD LOCK

Adjust the lock by loosening bolts.

Torque: 8.8 N·m (90 kgf·cm, 78 in.·lbf)

FRONT DOOR
COMPONENTS

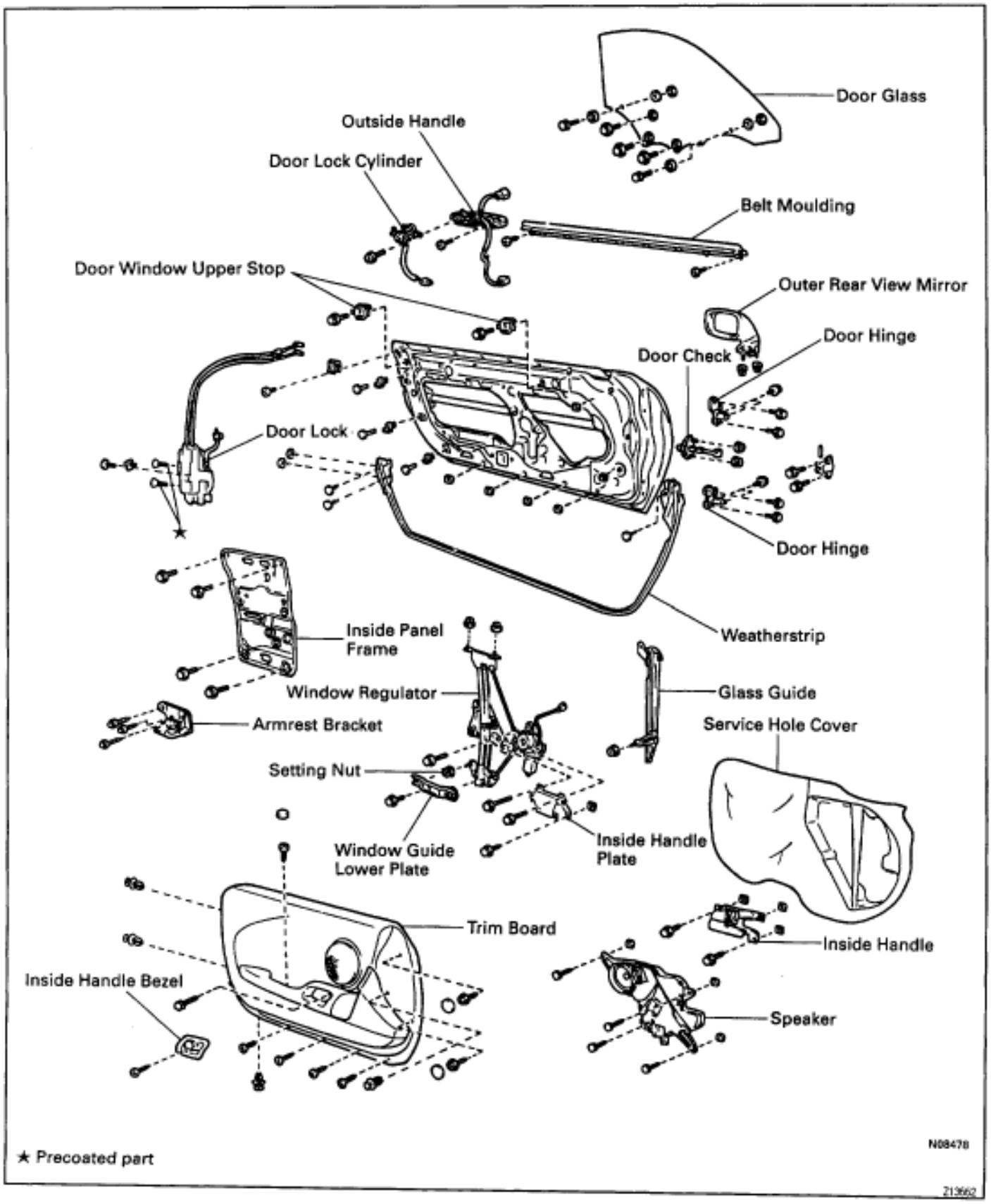

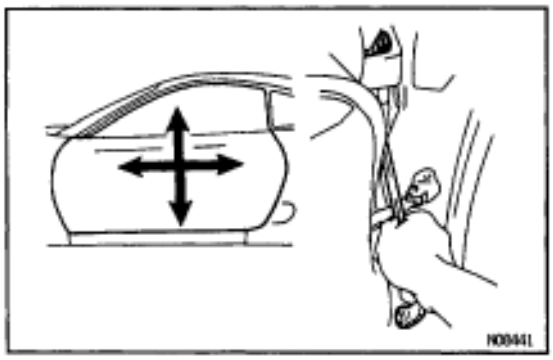

FRONT DOOR ADJUSTMENT

1. ADJUST DOOR IN FORWARD / REARWARD AND VERTICAL DIRECTIONS

Using SST, adjust the door by loosening the body side hinge bolts.

SST 09812–00020

Torque: 52 N·m (530 kgf·cm, 38 ft·lbf)

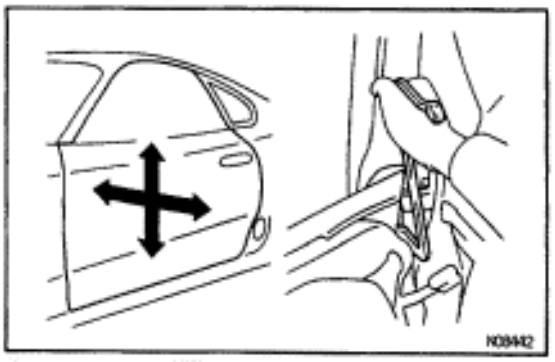

2. ADJUST DOOR IN LEFT/RIGHT AND VERTICAL DIRECTIONS

Using SST, adjust the door by loosening the door side hinge bolts.

SST 09812–00010

HINT: Substitute the standard bolt for the centering bolt. (See page BO–10)

Torque: 25 N·m (260 kgf·cm, 19 ft·lbf)

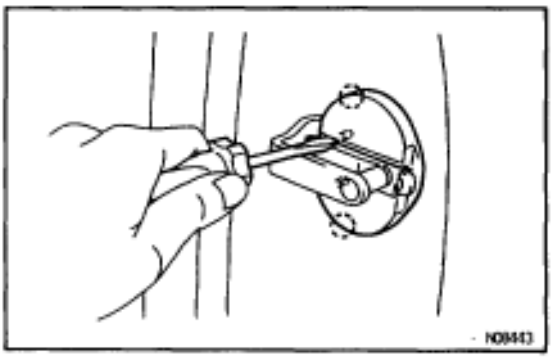

3. ADJUST DOOR LOCK STRIKER

(a) Check that the door fit and door lock linkages are adjusted correctly.

(b) Using a screwdriver, remove the striker cover.

(c) Using a torx wrench, loosen the striker mounting screws.

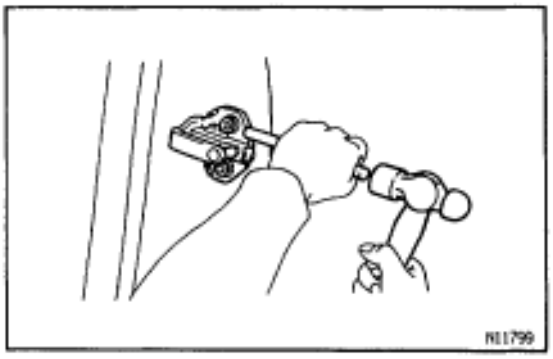

(d) Using a brass bar and hammer, tap the striker to adjust it.
CAUTION: Do not tap the striker too hard.

FRONT DOOR DISASSEMBLY

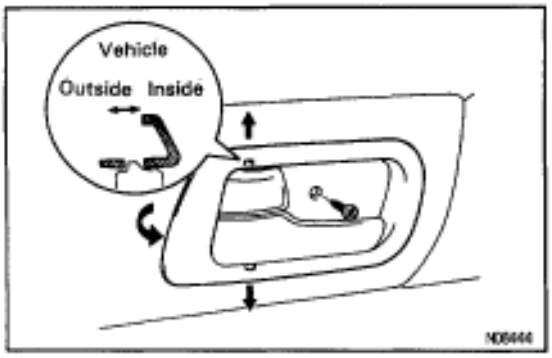

1. REMOVE INSIDE HANDLE BEZEL

Remove the screw and pull the inside handle bezel.

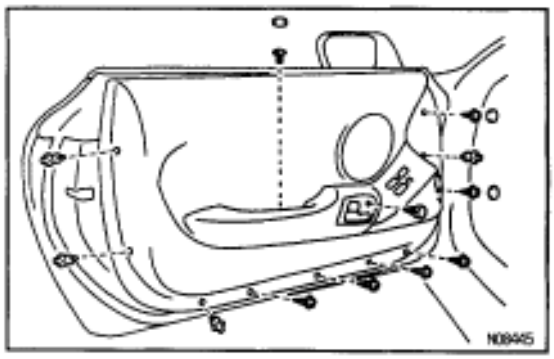

2. REMOVE TRIM BOARD

3. REMOVE THESE PARTS:

(a) Speaker
(b) Inside handle
(c) Armrest bracket
(d) Service hole cover
(e) Inside handle plate
(f) Weatherstrip

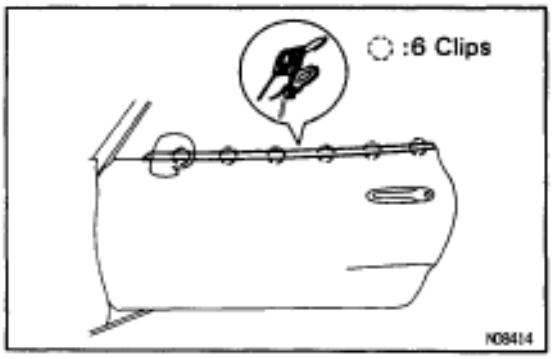

(g) Belt moulding
(h) Inside panel frame
(i) Door glass

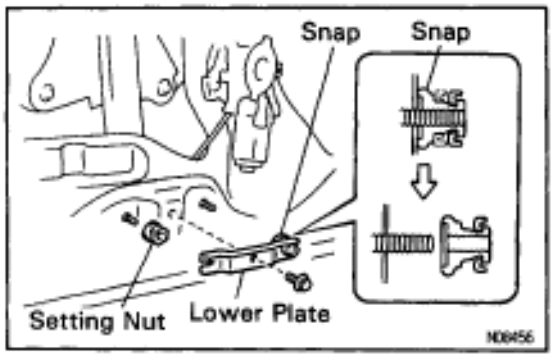

4. REMOVE WINDOW GUIDE LOWER PLATE

(a) Remove the bolt of the lower plate and connector.
(b) Unlock the snap by pulling the lower plate.
(c) Remove the snap and lower plate from the stud bolt of the lower bracket.
(d) Remove the setting nut from the lower bracket.

5. REMOVE THESE PARTS:

(a) Window regulator
(b) Door lock
(c) Outside handle
(d) Door lock cylinder
(e) Outer rear view mirror

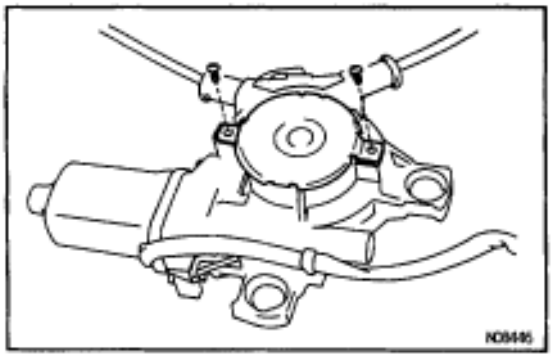

POWER WINDOW REGULATOR DISASSEMBLE AND REASSEMBLE

1. REMOVE POWER WINDOW MOTOR

(a) Remove 2 screws and the cover plate.

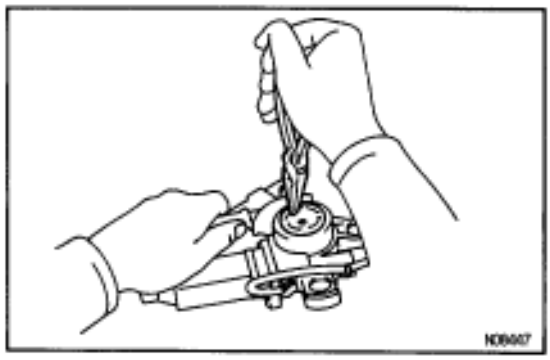

(b) Pull out the drum while detaching the cable guide out from the motor.

HINT:

- Pull out the drum and the cable guide evenly without tilting the drum.
- Handle the window regulator carefully so that the cable does not get detached.
- Do not pry the above parts with a screwdriver.

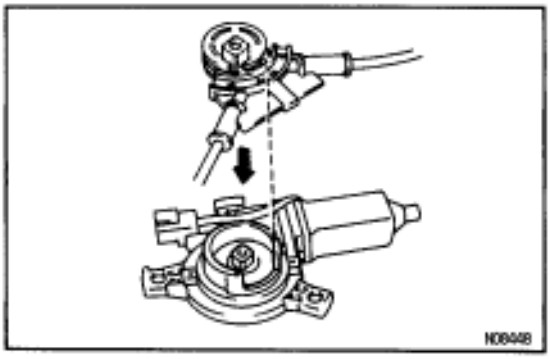

2. INSTALL POWER WINDOW MOTOR

(a) Install the motor by fitting the shaft of the motor into the window regulator drum.

HINT:

- If the shaft does not fit properly into the drum, slowly move the window glass bracket by hand to turn the drum.
- While turning the drum, make sure that it does not detach away from the cable guide.

(b) Install the cover plate.

HINT: Attach the cover plate firmly onto the motor to eliminate any looseness.

FRONT DOOR ASSEMBLY

Assembly is in the reverse order of disassembly.

FRONT DOOR GLASS ADJUSTMENT

1. CHECK FRONT DOOR GLASS

Check the following items. If the conditions are not met, readjust the glass.

(a) When you close the door with the glass fully closed, the A–A, B–B sections are in the same condition as shown in the illustration.

(b) When you push the glass firmly from inside, the glass stops at the roof drip moulding and does not move.
(c) When you close the door with the glass fully closed, the glass is not caught in the outside lip of the weatherstrip and does not touch to the roof drip moulding.
(d) With the door closed, the glass moves smoothly.
(e) The upper edge of the glass cannot be seen from outside of the vehicle (edge touching roof side rail weatherstrip).
(f) When the glass is being raised, the glass and roof side rail weatherstrip are parallel, and the front and rear door window upper stops touch at the same time.

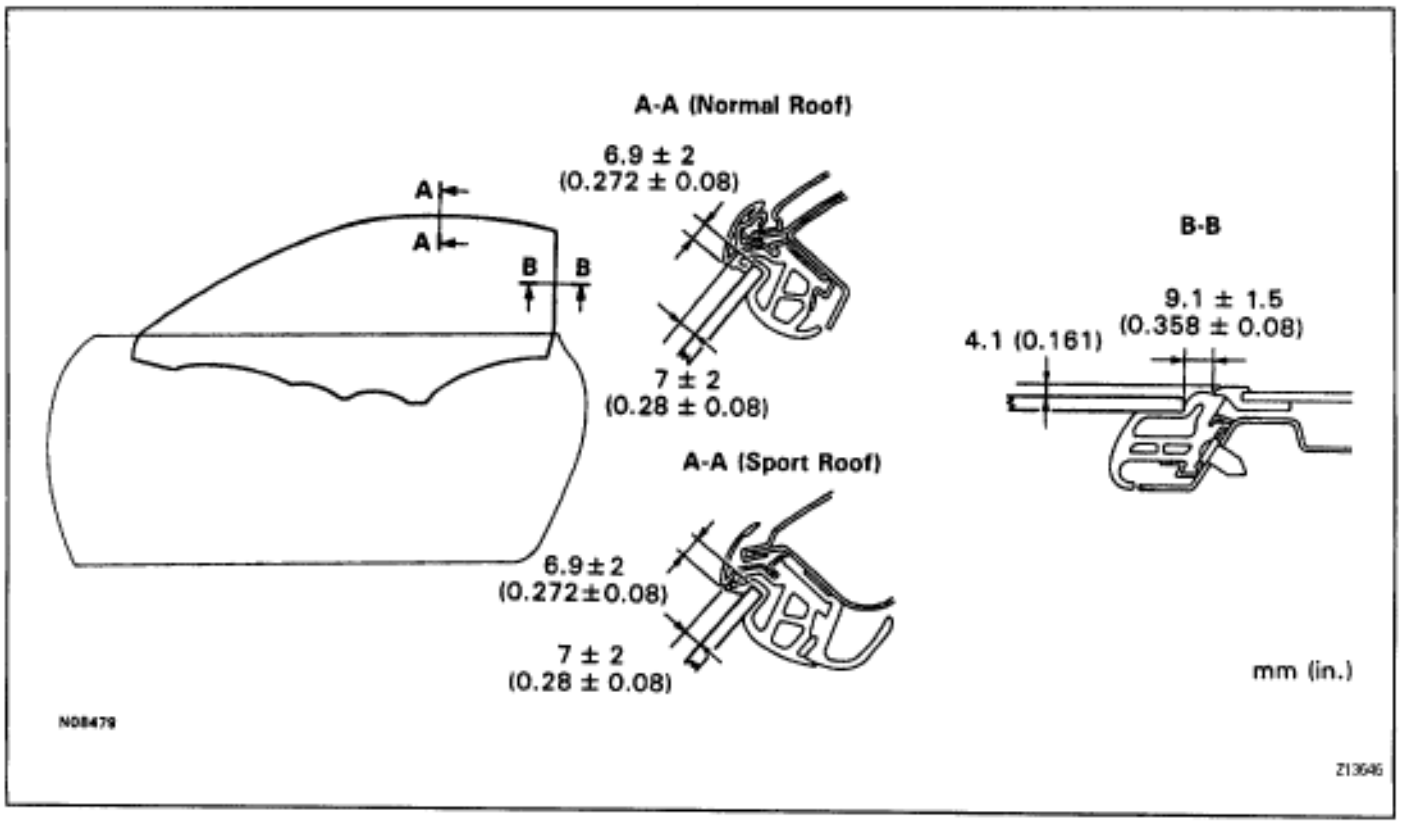

2. ADJUST FRONT DOOR GLASS

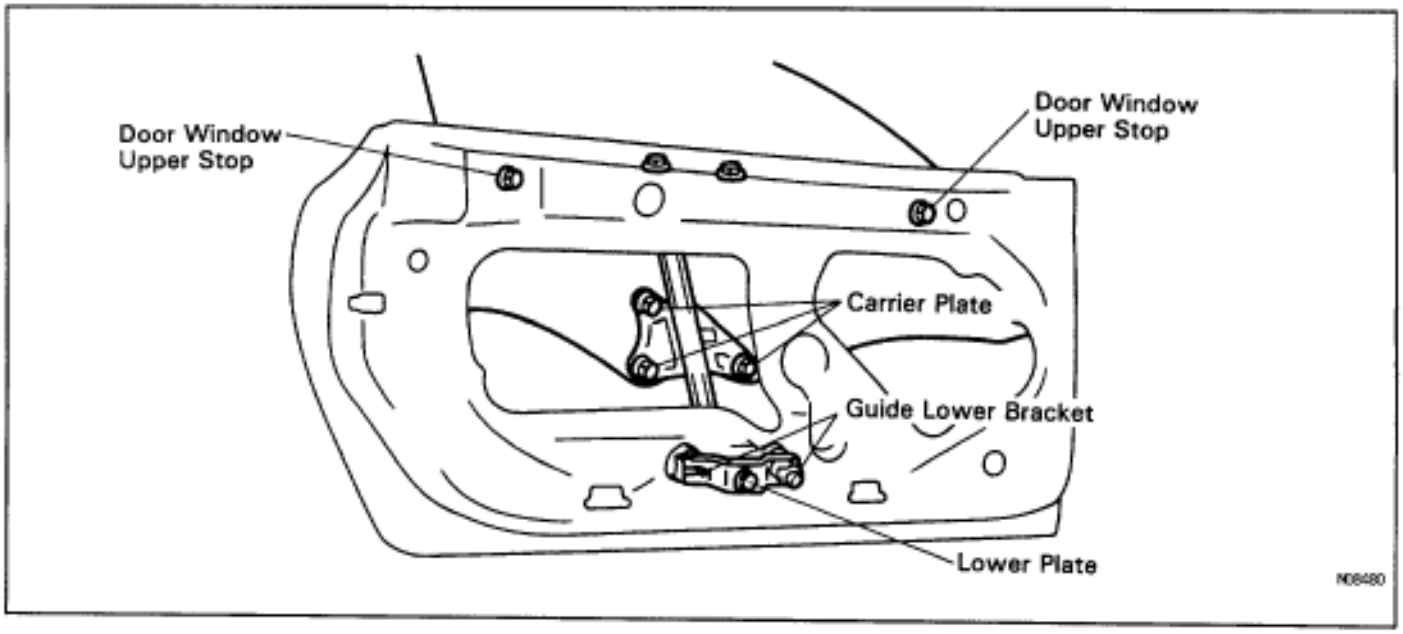

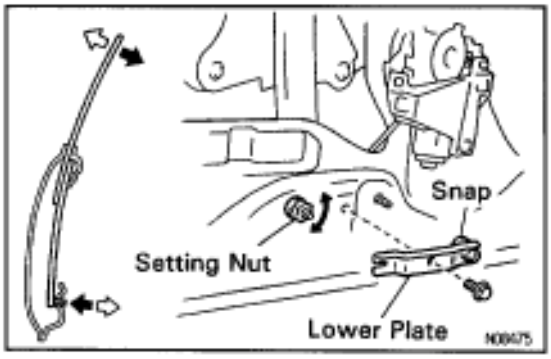

Upper side of glass–in/out

(a) Remove the lower plate bolt.
(b) Pull the lower plate so that the snap is unlocked.
(c) Remove the snap and lower plate.
(d) Adjust the glass by turning the setting nut.
(e) Reinstall the lower plate, snap and bolt.

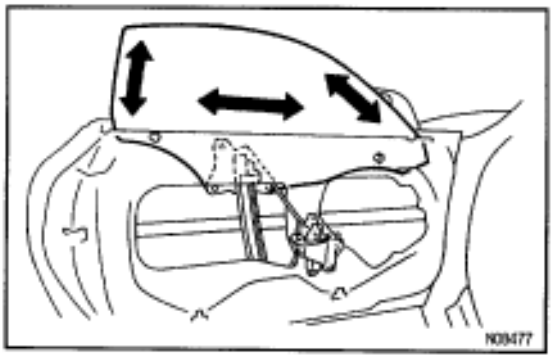

Position (forward/rearward) and attitude of glass

Loosen 3 bolts of the carrier plate and adjust.

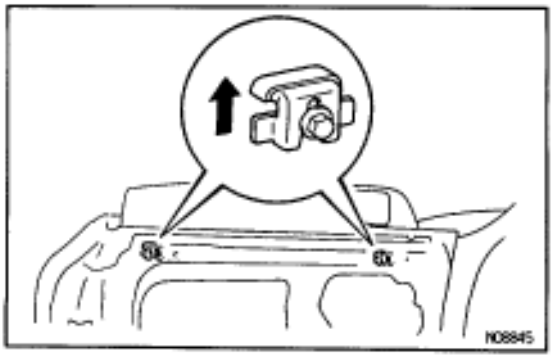

Position (vertical) and attitude of glass (when glass fully closed)

Adjust the door window upper stop.

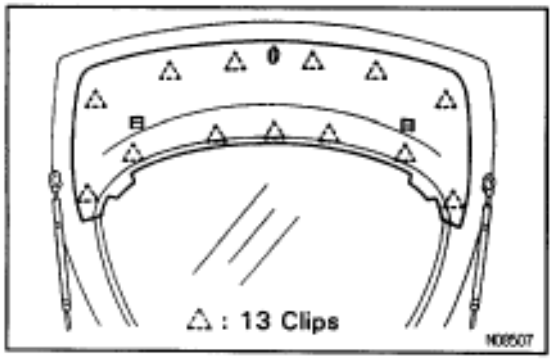

BACK DOOR

BACK DOOR ADJUSTMENT

1. ADJUST DOOR IN HORIZONTAL DIRECTION

(a) Remove the back door trim board.

(b) Remove the roof headlining. (See pages BO–58 to 61)

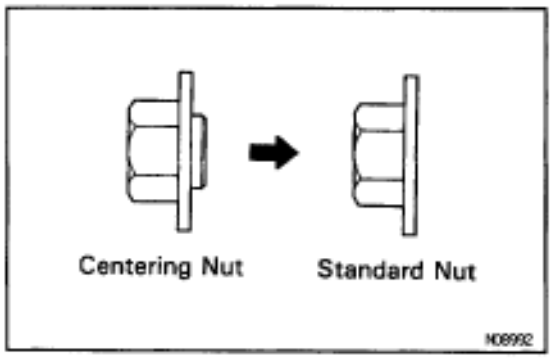

(c) Adjust the door by loosening the body side hinge nuts.
Torque: 21 N·m (210 kgf·cm, 15 ft·lbf)
HINT: Since the centering nut is used as the back door hinge nut, the back door cannot be adjusted with it on. Substitute the standard nut for the centering nut.

(d) Reinstall the removed parts in the reverse order to their removal.

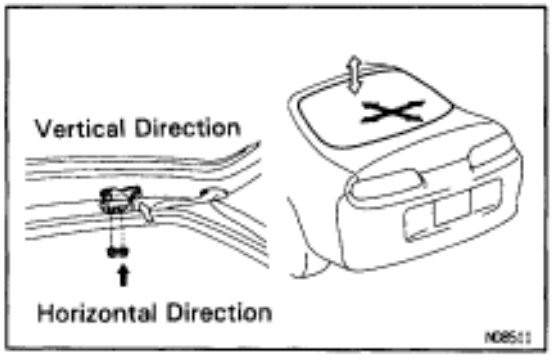

2. ADJUST DOOR IN VERTICAL DIRECTION

Adjust the door by loosening the back door side hinge bolts.
Torque: 13 N·m (130 kgf·cm, 9.4 ft·lbf)
HINT: Substitute the standard bolt for the centering bolt. (See page BO–10)

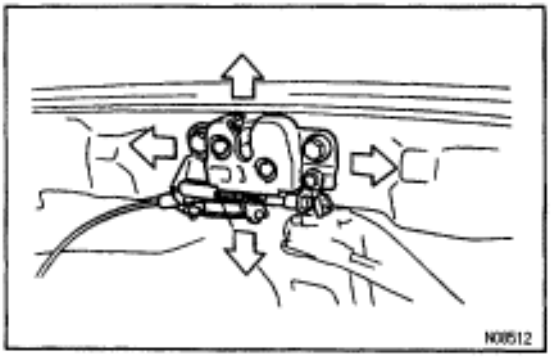

3. ADJUST DOOR LOCK

(a) Remove the clips and the deck trim rear cover.

(b) Loosen the lock mounting bolts to adjust.
Torque: 19 N·m (195 kgf·cm, 14 ft·lbf)

(c) Using a brass bar and hammer, tap the lock to adjust it.
CAUTION: Do not tap the lock too hard. (See page BO–12)

(d) Install the deck trim rear cover.

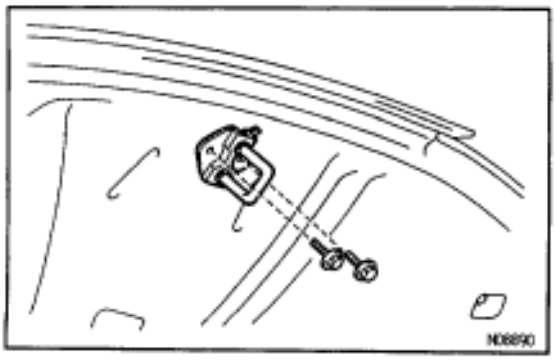

BACK DOOR LOCK STRIKER REMOVAL AND INSTALLATION

1. REMOVE BACK DOOR TRIM BOARD

2. REMOVE AND INSTALL STRIKER
Torque: 13 N·m (130 kgf·cm, 9.4 ft·lbf)

3. INSTALL BACK DOOR TRIM BOARD

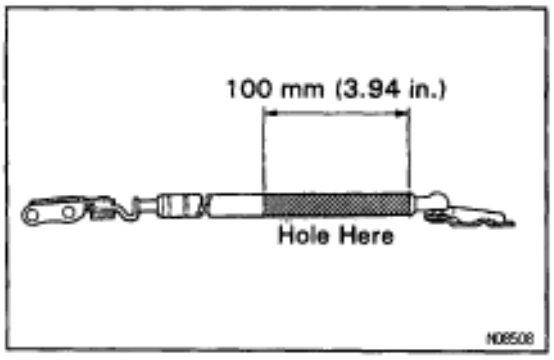

BACK DOOR DAMPER STAY REMOVAL

1. **REMOVE ROOF SIDE INNER GARNISH**
   (See page BO–60)
2. **REMOVE DAMPER STAY LOWER END FROM BODY**
3. **REMOVE DAMPER STAY UPPER END FROM BACK DOOR**
   NOTICE: When handling the damper.
   - **Do not disassemble the damper because the cylinder is filled with pressurized gas.**
   - **If the damper is to be replaced, drill a 2.0–3.0 mm (0.079–0.118 in.) hole in the bottom of the removed damper cylinder to completely release the high–pressure gas before disposing of it.**
   - **When drilling, chips may fly out so work carefully.**
   - **The gas is colorless, odorless and non–toxic.**
   - **When working, handle the damper carefully. Never score or scratch the exposed part of the piston rod, and never allow paint or oil to get on it.**
   - **Do not turn the piston rod and cylinder with the damper fully extended.**

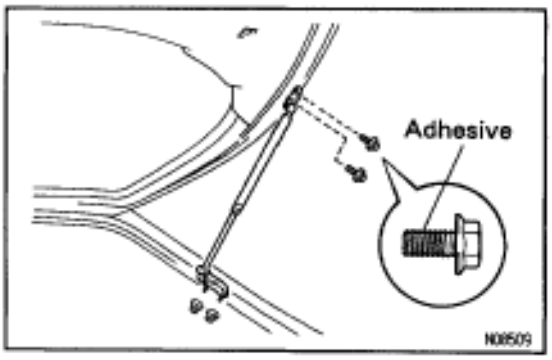

BACK DOOR DAMPER STAY INSTALLATION

1. **INSTALL DAMPER STAY UPPER END TO BACK DOOR**
   NOTICE: Apply adhesive to the bolts before tightening.
   Nut to body
   Torque: 5.9 N·m (60 kgf·cm, 52 in.·lbf)
   Bolt to back door
   Torque: 7.8 N·m (80 kgf·cm, 69 in.·lbf)
2. **INSTALL DAMPER STAY LOWER END TO BODY**
3. **INSTALL ROOF SIDE INNER GARNISH**
   (See page BO–60)

WIPER AND WASHER
COMPONENTS

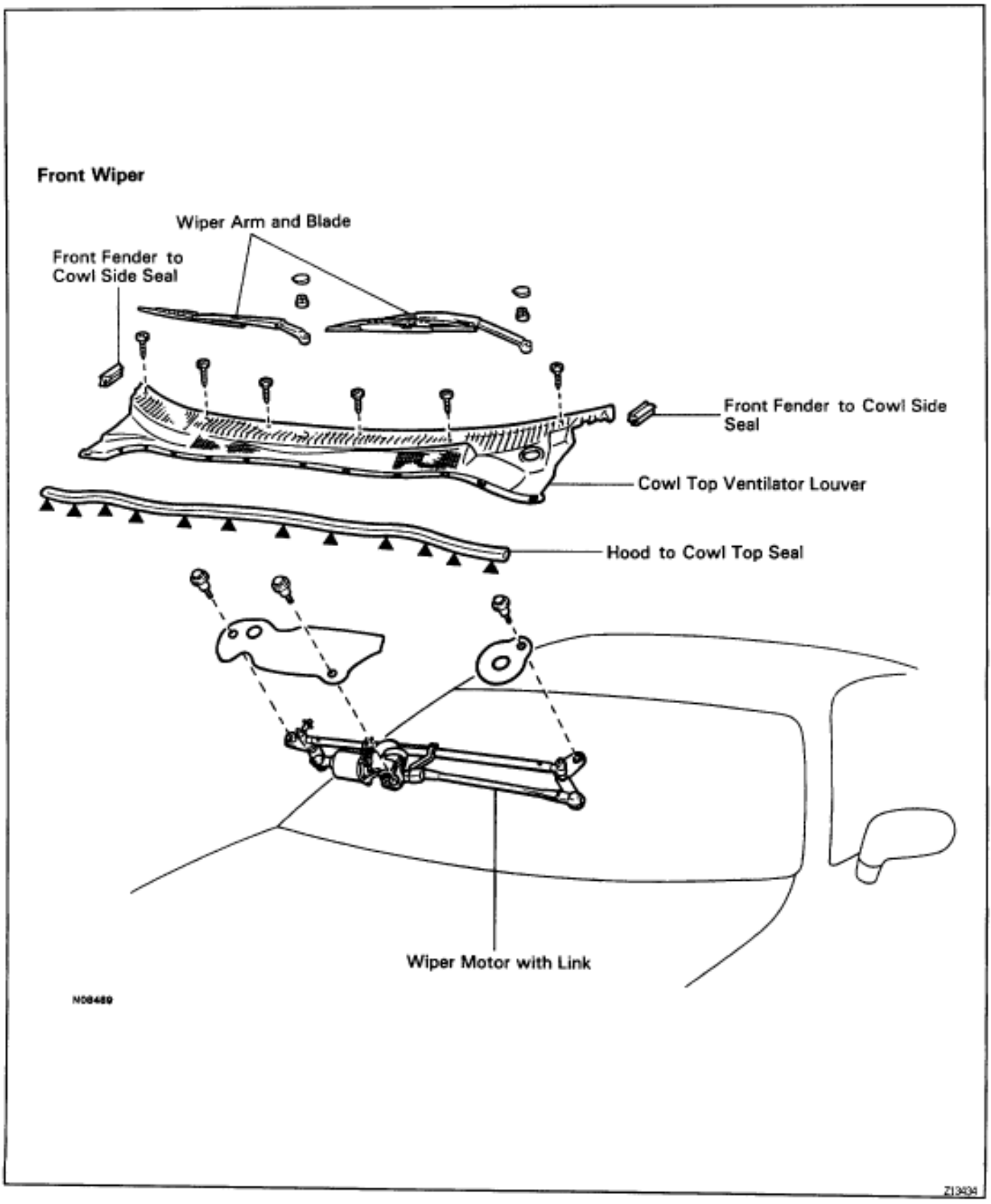

COMPONENTS (Cont'd)

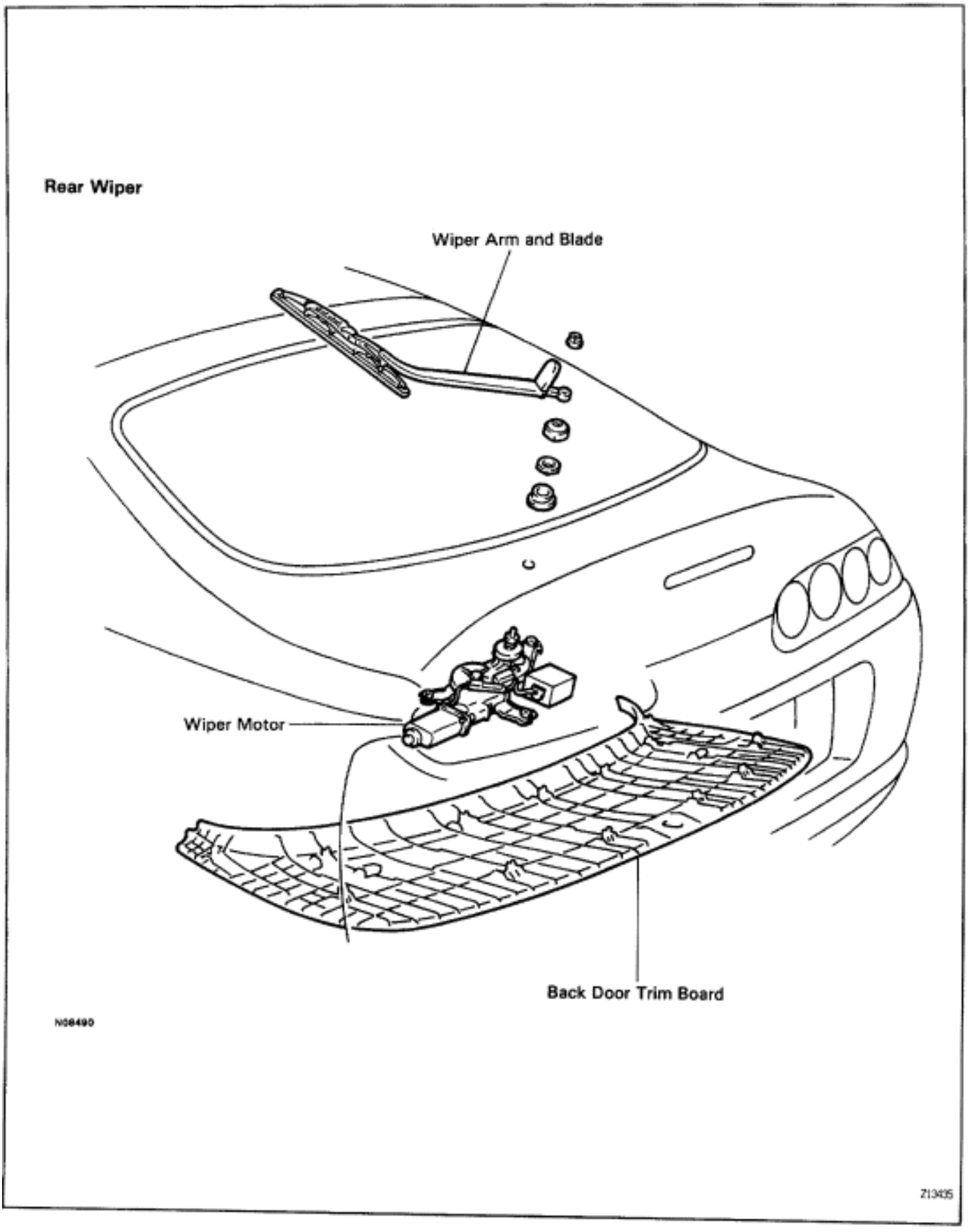

FRONT WIPER REMOVAL

1. REMOVE THESE PARTS:

(a) Wiper arm and blade

(b) Cowl top ventilator louver

2. REMOVE FRONT WIPER MOTOR

(a) Disconnect the connector, then unfasten the 3 bolts.

(b) Remove the wiper motor with the link.

FRONT WIPER INSTALLATION

1. INSTALL THESE PARTS:

(a) Wiper motor with link

(b) Cowl top ventilator louver

2. INSTALL WIPER ARM AND BLADE

(a) Install the wiper arms and operate the wipers once and turn the wiper switch OFF.

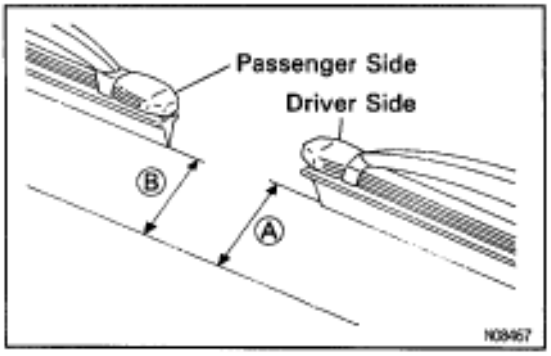

(b) Adjust the installation positions of the wiper arms to the positions shown in the illustration.

(A) **Approx. 32.4 mm (1.28 in.)**

(B) **Approx. 33.7 mm (1.33 in.)**

(c) Torque the nut.

Torque: 22 N·m (225 kgf·cm, 16 ft·lbf)

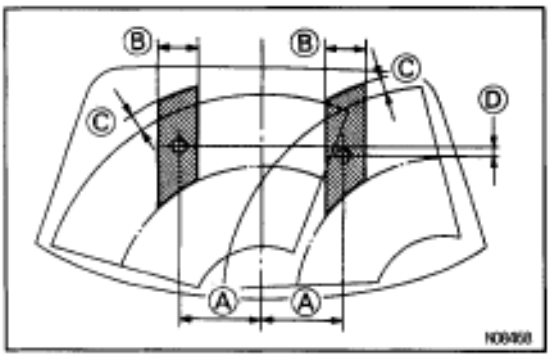

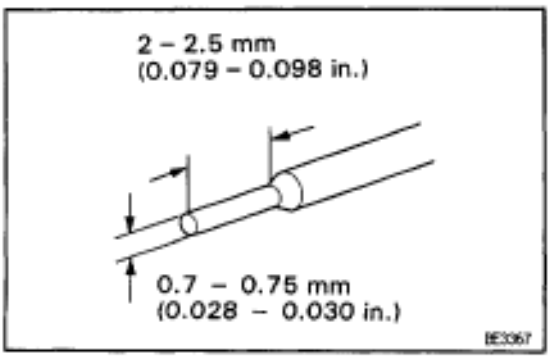

FRONT WASHER NOZZLE ADJUSTMENT

1. INSPECT FRONT WASHER NOZZLE

(a) While operating the washer, check that both the point where the washer fluid from the upper nozzles hits the windshield, and the up surge area, are within the range indicated by the hatched line.

(A) **Approx. 275 mm (10.8 in.)**

(B) **Approx. 150 mm (5.9 in.)**

(C) **Approx. 50 mm (2.0 in.)**

(D) **Within 100 mm (3.9 in.)**

(b) Ensure that the lower point where the washer fluid hits the windshield is within the range of the wiping pattern (the area of the glass which is wiped by the wiper blades.

2. ADJUST FRONT WASHER NOZZLE

Using a tool like that shown in the illustration, change the direction of the nozzle hole to adjust the point where washer fluid strikes the windshield.

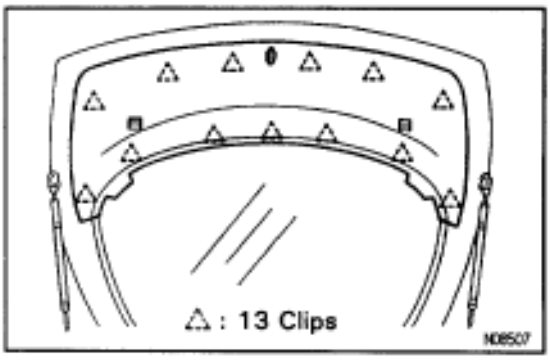

REAR WIPER REMOVAL

1. REMOVE WIPER ARM AND BLADE

2. REMOVE BACK DOOR TRIM BOARD

3. REMOVE WIPER MOTOR ASSEMBLY

(a) Disconnect the connector, then unfasten the 3 bolts.

(b) Remove the motor.

REAR WIPER INSTALLATION

1. INSTALL THESE PARTS:

(a) Wiper motor

(b) Back door trim board

2. INSTALL WIPER ARM AND BLADE

(a) Install the wiper arm and operate the wiper once and turn the wiper switch OFF.

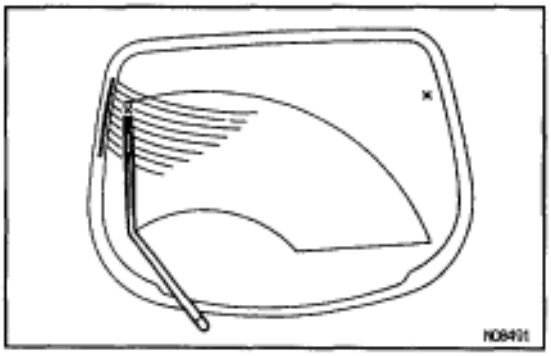

(b) Adjust the top of the wiper blade to the installation mark printed on the glass.

(c) Torque the nut.

Torque: 11 N·m (110 kgf·cm, 8.0 ft·lbf)

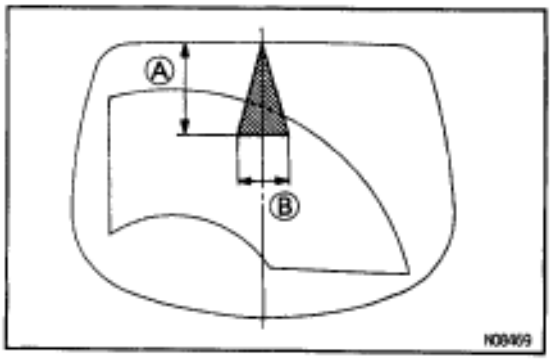

REAR WASHER NOZZLE ADJUSTMENT

1. INSPECT REAR WASHER NOZZLE

While operating the washer, check that the point where the washer fluid hits the back door glass is within the range indicated by the hatched line.

(A) **Approx. 300 mm (11.8 in.)**

(B) **Approx. 150 mm (5.9 in.)**

2. ADJUST REAR WASHER NOZZLE

(See step 2 on page BO–21)

WINDSHIELD MOULDING

COMPONENTS

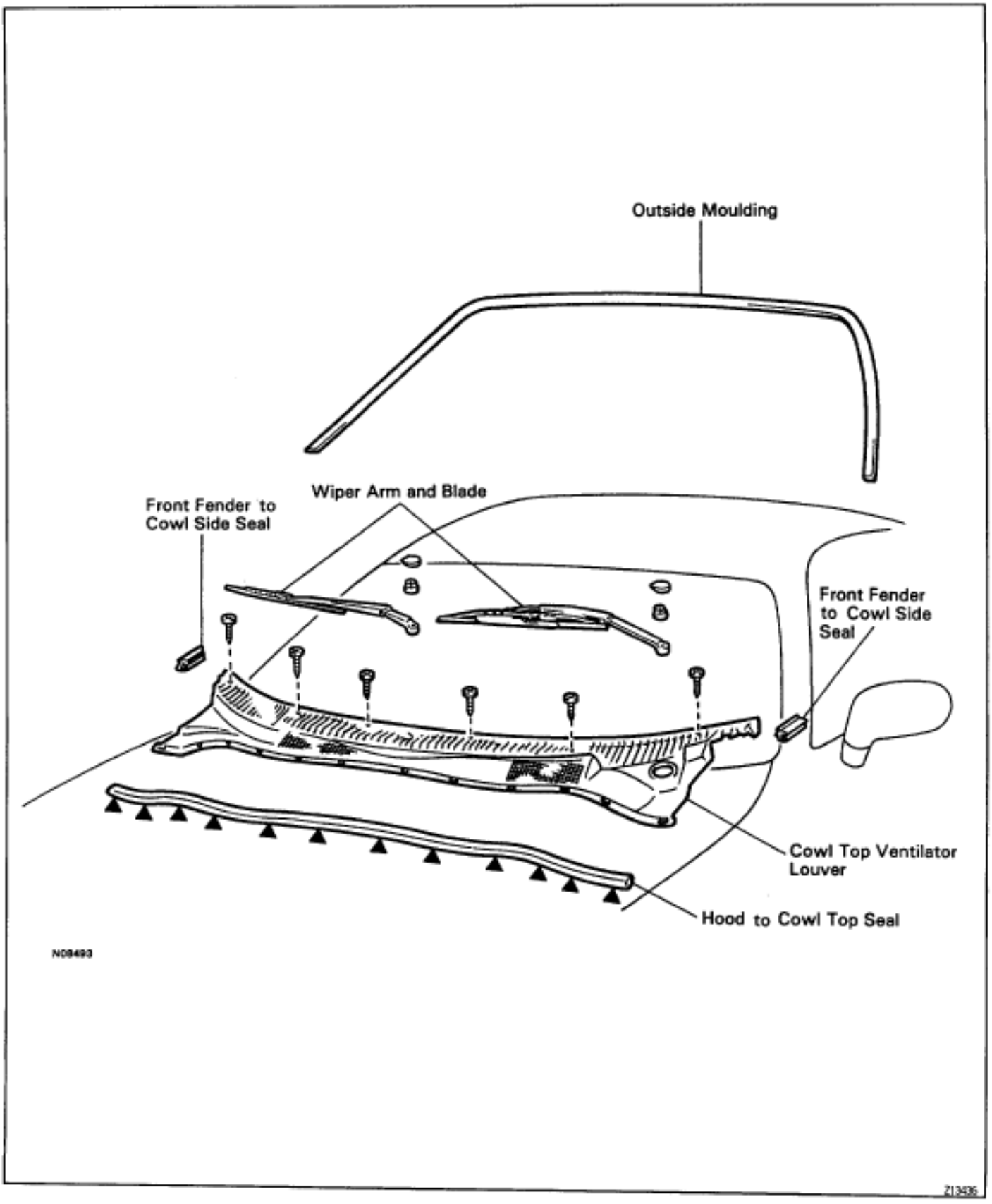

WINDSHIELD MOULDING REMOVAL

1. REMOVE THESE PARTS:

(a) Wiper arm and blade

(b) Cowl top ventilator louver

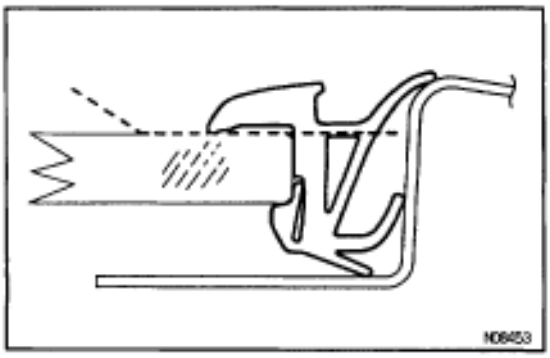

2. REMOVE WINDSHIELD MOULDING

(a) Using a knife, cut off the moulding as shown.

(b) Cut away the adhesive at the moulding installation area as much as possible.

NOTICE: Do not damage the body with the knife.

WINDSHIELD MOULDING INSTALLATION

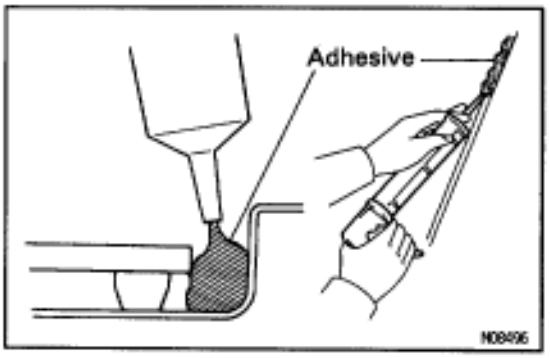

1. CUT ADHESIVE AT MOULDING INSTALLATION AREA

Using the knife, cut off the adhesive around the moulding installation area.

2. APPLY ADHESIVE AT MOULDING INSTALLATION AREA

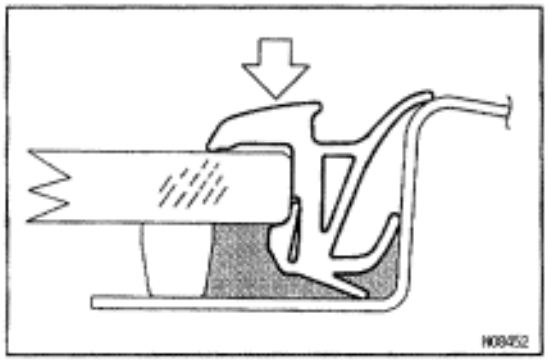

3. INSTALL WINDSHIELD MOULDING

Place the moulding onto the body and tap it by hand.

4. INSTALL THESE PARTS:

(a) Cowl top ventilator louver

(b) Wiper arm and blade

Torque: 22 N·m (225 kgf·cm, 16 ft·lbf)

BODY OUTSIDE MOULDING

COMPONENTS

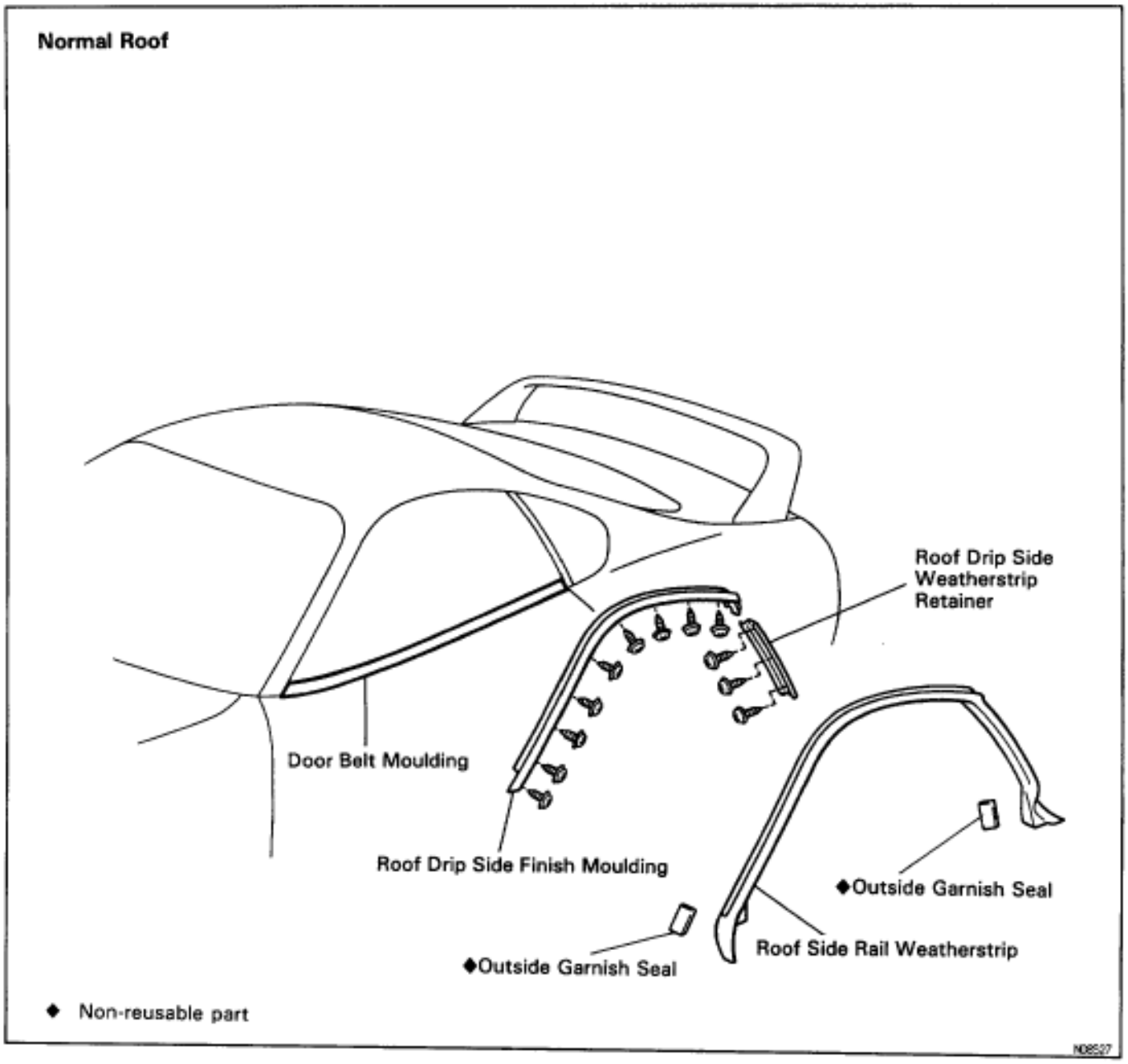

COMPONENTS (Cont'd)

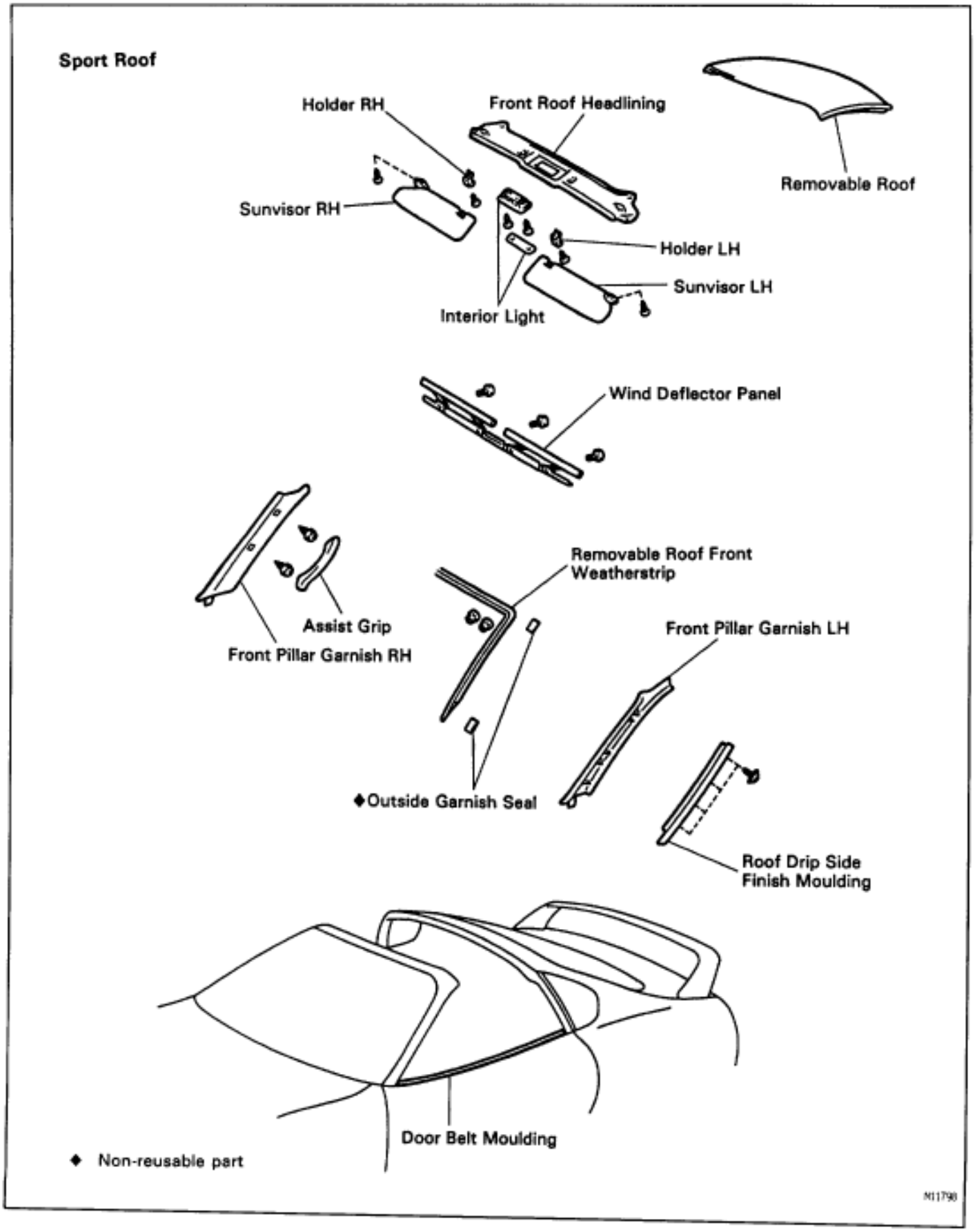

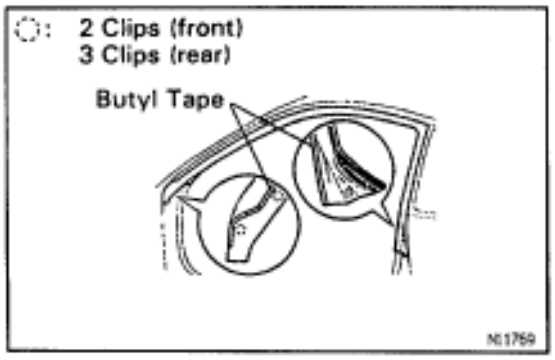

ROOF DRIP SIDE FINISH MOULDING

REMOVAL

Normal roof

1. **REMOVE ROOF SIDE RAIL WEATHERSTRIP**
   Using a clip remover, remove 2 clips for front and 3 clips for rear side of the weatherstrip and remove the weatherstrip.
2. **REMOVE ROOF SIDE RAIL WEATHERSTRIP RETAINER**
   Remove 3 screws and the retainer.
3. **REMOVE ROOF DRIP SIDE FINISH MOULDING**
   Remove 9 screws and the moulding.

Sport roof

1. **REMOVE THESE PARTS:**

(a) Removable roof
(b) Assist grip (See page BO–60)
(c) Front pillar garnish (See page BO–60)
(d) Interior light
(e) Sunvisor and holder
(f) Front roof headlining (See page BO–61)
(g) Wind deflector panel

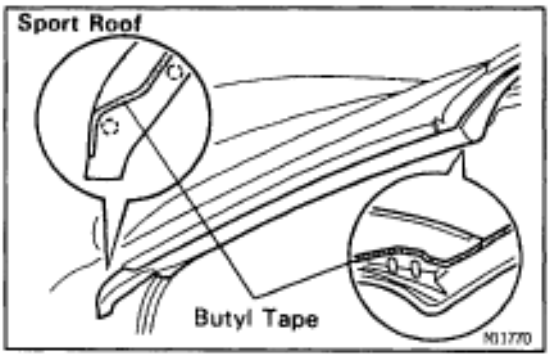

2. **REMOVE ROOF SIDE RAIL WEATHERSTRIP**

(a) Remove 2 bolts from the front weatherstrip.
(b) Using a clip remover, remove 2 clips and the weatherstrip.

3. **REMOVE ROOF DRIP SIDE FINISH MOULDING**
   Remove 4 screws and the moulding.

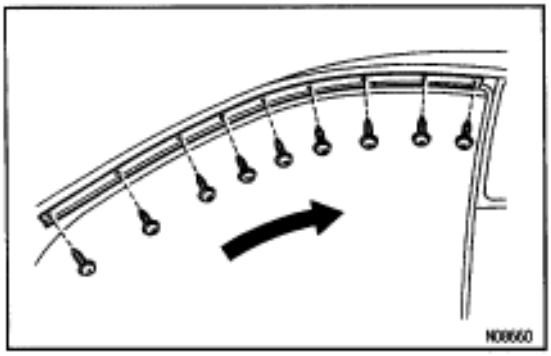

ROOF DRIP SIDE FINISH MOULDING INSTALLATION

Normal roof

1. INSTALL ROOF DRIP SIDE FINISH MOULDING

Install the moulding with 9 screws.

HINT: Tighten the screws from front to rear.

2. INSTALL ROOF SIDE RAIL WEATHERSTRIP RETAINER

Install the retainer with 3 screws.

3. INSTALL OUTSIDE GARNISH SEAL

Install the garnish seal to the retainer as shown in the illustration.

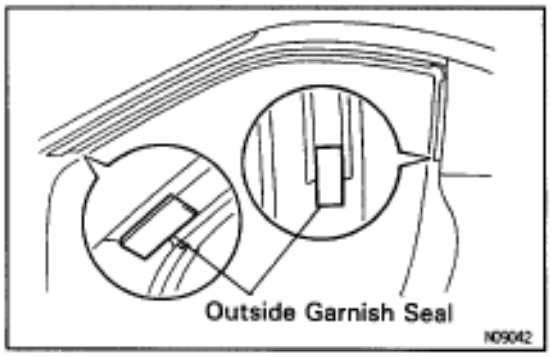

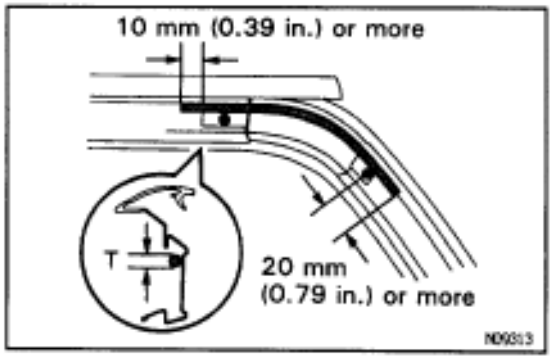

4. APPLY SEAL PACKING

Apply seal packing to the moulding and retainer as shown in the illustration.

T: 3 mm (0.12 in.) or more

Part No. 08826–00080

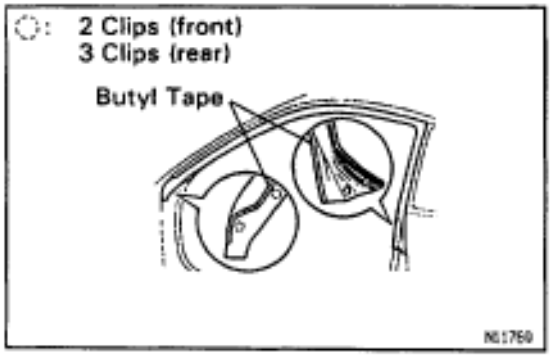

5. INSTALL ROOF SIDE RAIL WEATHERSTRIP

(a) Install the butyl tape to the weatherstrip as shown in the illustration.

(b) Install the weatherstrip.

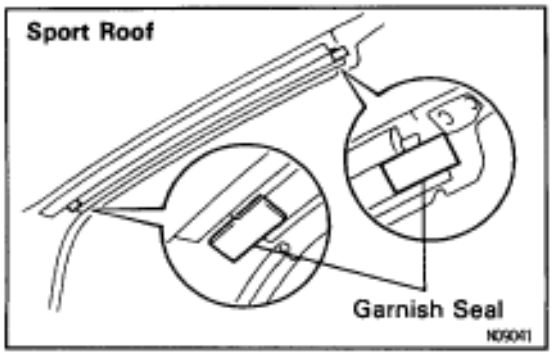

Sport roof

1. INSTALL ROOF DRIP SIDE FINISH MOULDING

Install the moulding with 4 screws.

HINT: Tighten the screws from front to rear.

2. INSTALL OUTSIDE GARNISH SEAL

Install the garnish seal to the moulding as shown in the illustration.

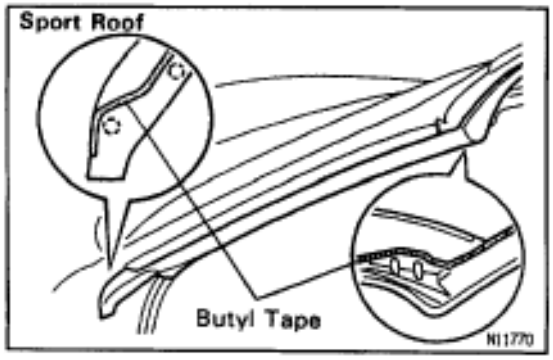

3. INSTALL ROOF SIDE RAIL WEATHERSTRIP

(a) Install the butyl tape to the weatherstrip as shown in the illustration.

(b) Install the weatherstrip.

4. INSTALL REMOVED PARTS IN REVERSE ORDER TO THEIR REMOVAL

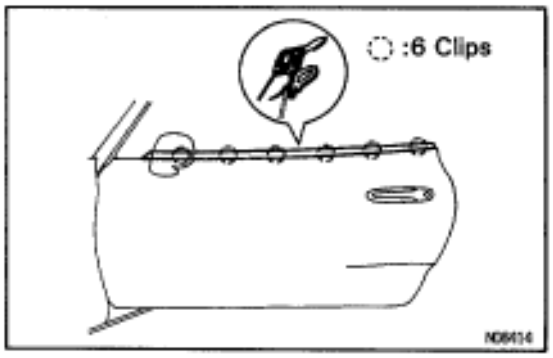

FRONT DOOR BELT MOULDING REMOVAL AND NSTALLATION

1. REMOVE FRONT DOOR COMPONENT PARTS
(See page BO–11)

2. REMOVE FRONT DOOR BELT MOULDING

3. INSTALL FRONT DOOR BELT MOULDING

4. INSTALL FRONT DOOR COMPONENT PARTS

WINDSHIELD
COMPONENTS

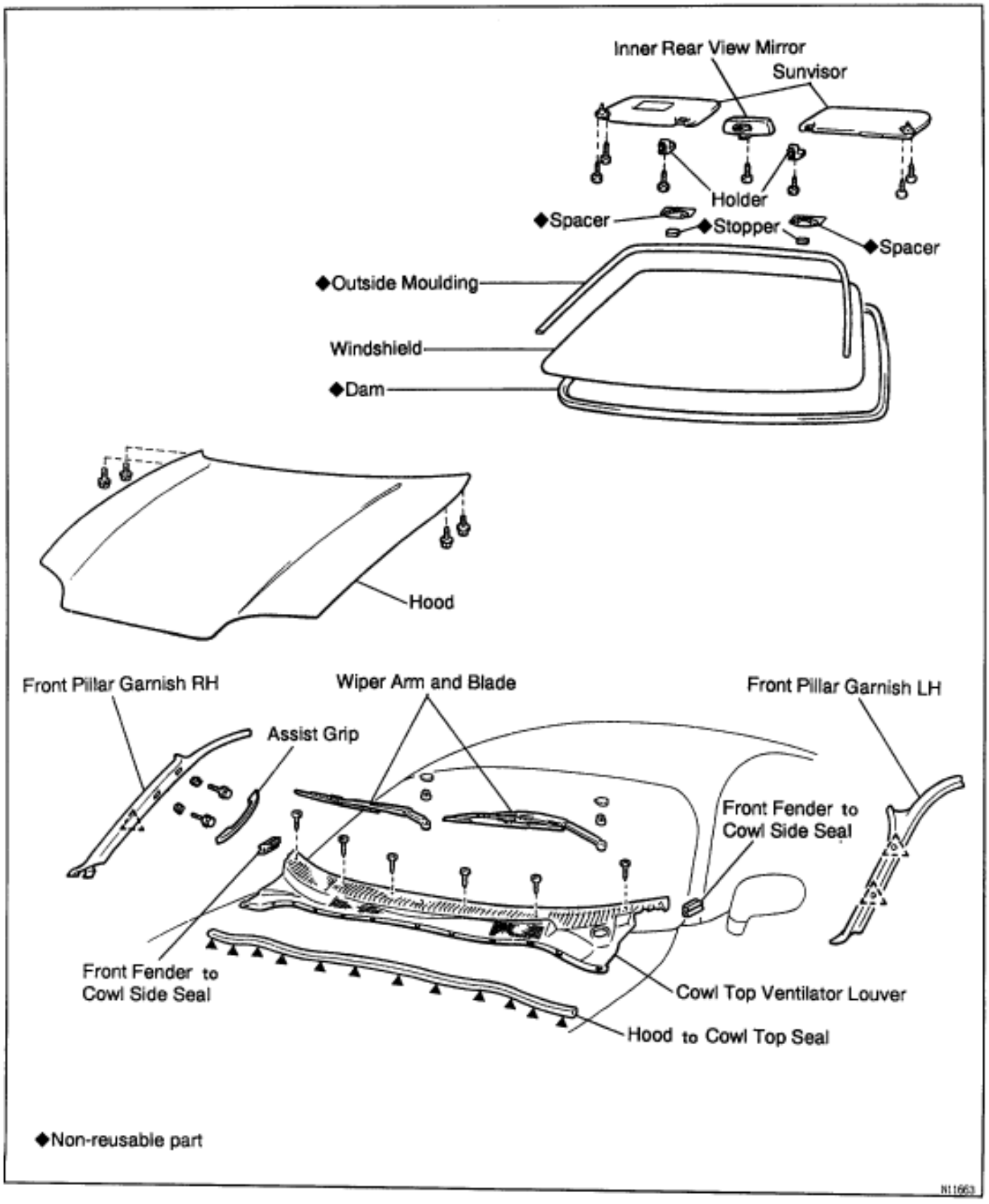

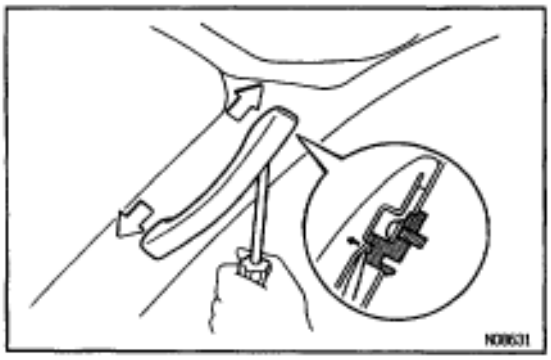

WINDSHIELD REMOVAL

1. REMOVE THESE PARTS:

(a) Inner rear view mirror
(b) Sunvisors and holders
(c) Assist grip

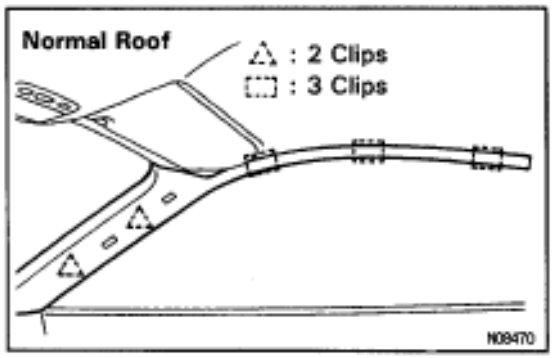

(d) Front pillar garnishes
(e) Hood
(f) Wiper arms and blades
(g) Cowl top ventilator louver

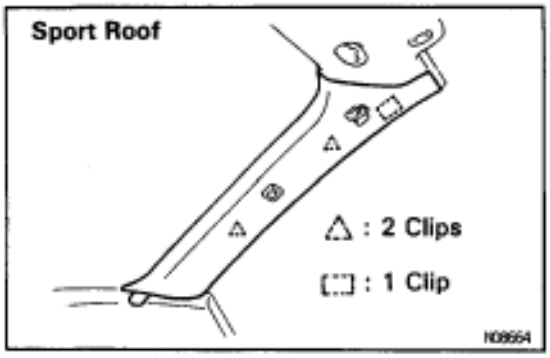

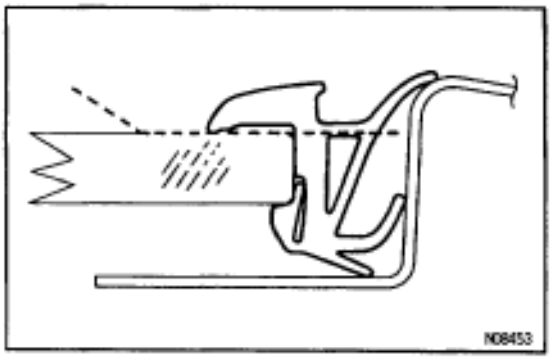

2. REMOVE WINDSHIELD MOULDING

Using a knife, cut off the moulding as shown.

NOTICE: Do not damage the body with the knife.

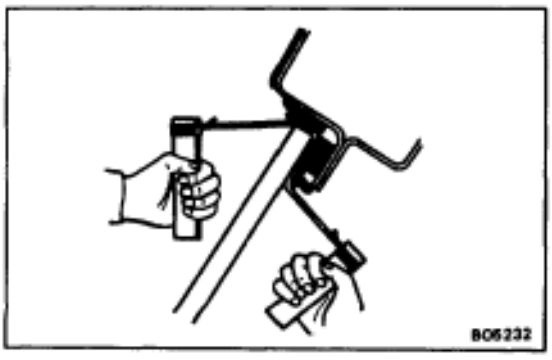

3. REMOVE WINDSHIELD GLASS

(a) Push piano wire through from the interior.
(b) Tie both wire ends to a wooden block or similar object.

HINT: Apply adhesive tape to the outer surface of the glass to keep the surface from being scratched.

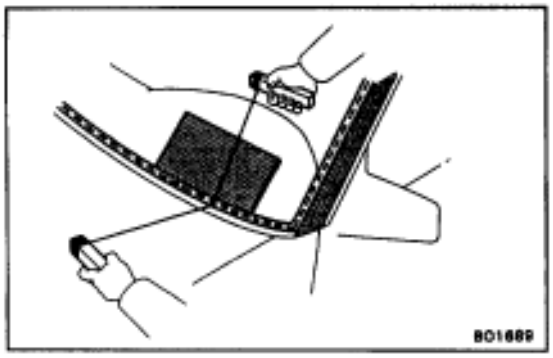

NOTICE: When separating the glass, take care not to damage the paint and interior and exterior ornaments. To prevent scratching the instrument panel when removing the windshield, place a plastic sheet between the piano wire and instrument panel.

(c) Cut the adhesive by pulling the piano wire around it.

(d) Remove the glass.

NOTICE: Leave as much of the adhesive on the body as possible when cutting off the glass.

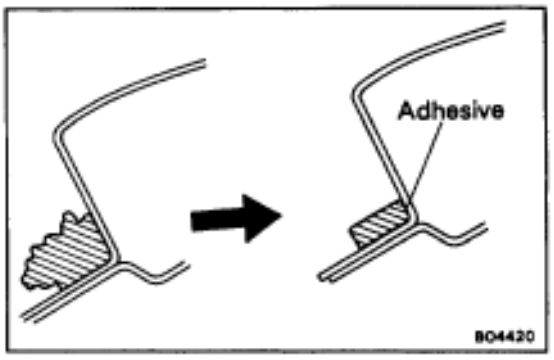

WINDSHIELD INSTALLATION

1. CLEAN AND SHAPE CONTACT SURFACE OF BODY

(a) Using a knife, cut away any rough areas on the body.
HINT: Leave as much of the adhesive on the body as possible.

(b) Clean the cutting surface of the adhesive with a piece of shop rag saturated in cleaner.
HINT: Even if all the adhesive has been removed, clean the body.

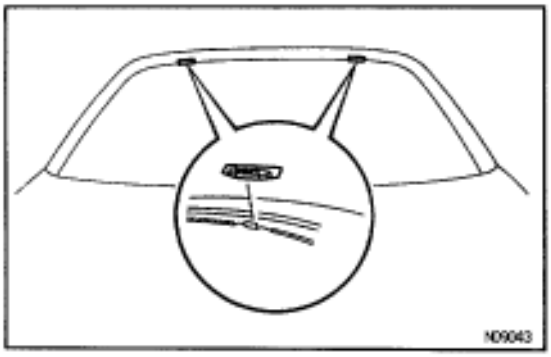

2. INSTALL SPACERS

Install the spacers to the body as shown in the illustration.

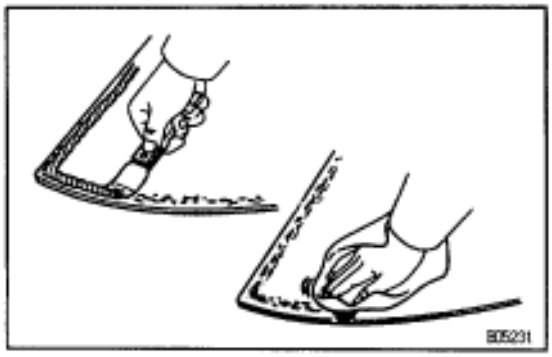

3. CLEAN REMOVED GLASS

(a) Using a scraper, remove the adhesive sticking to the glass.

(b) Clean the glass with cleaner.

NOTICE: Do not touch the glass after cleaning it.

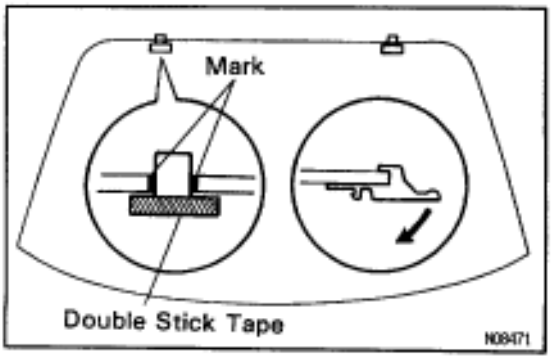

4. INSTALL STOPPERS

(a) Remove adhesive cover from stopper.

(b) Position the stopper on the edge of the glass as shown on the illustration.

(c) Break in the protruding part of the stopper.

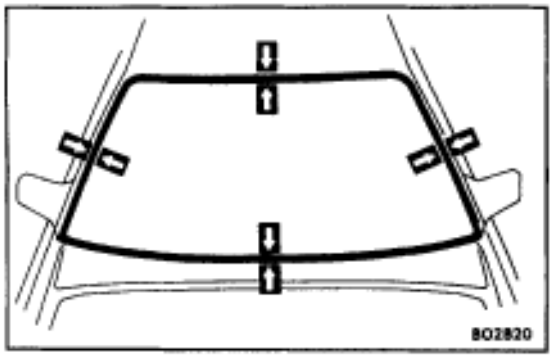

5. POSITION GLASS

(a) Place glass in correct position.

(b) Check that all contacting parts of the glass rim are perfectly even and do not make contact with the fasteners.

(c) Place reference marks between the glass and body.

(d) Remove the glass.

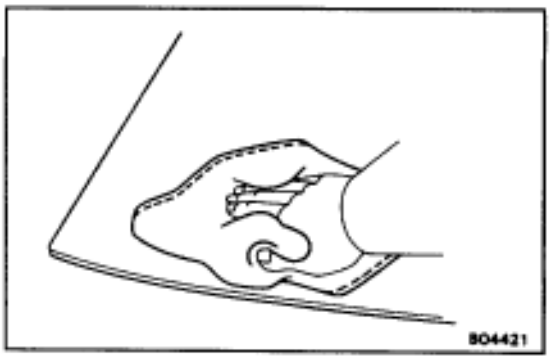

6. CLEAN CONTACT SURFACE OF GLASS

Using a cleaner, clean the contact surface black colored area around the entire glass rim.

NOTICE: Do not touch the glass face after cleaning it.

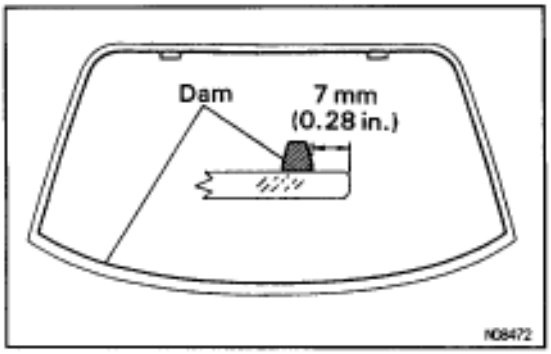

7. INSTALL DAM

Install the dam with double–stick tape all the way around the glass except where the stoppers are installed as shown in the illustration.

NOTICE: Do not touch the glass face after cleaning it.

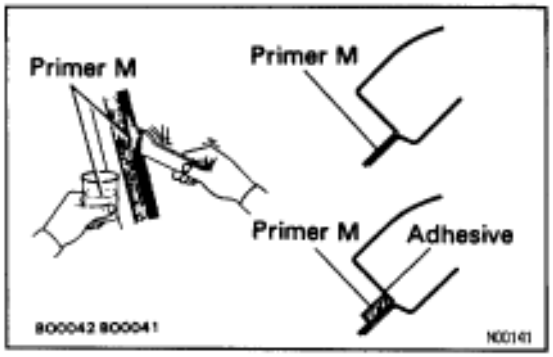

8. COAT CONTACT SURFACE OF BODY WITH PRIMER "M"

Using a brush, coat the contact surface on the body with Primer "M".

NOTICE:

- **Let the primer coating dry for 3 minutes or more.**
- **Do not keep any of the opened primer "M" and "G" for later use.**

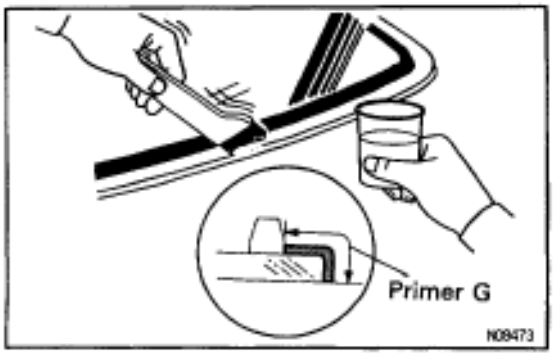

9. COAT CONTACT SURFACE OF GLASS WITH PRIMER "G"

(a) Using a brush or sponge, coat the edge of the glass and the contact surface with Primer "G".

(b) Before the Primer dries, wipe it off with a clean shop rag.

NOTICE: Let the primer coating dry for 3 minutes or more.

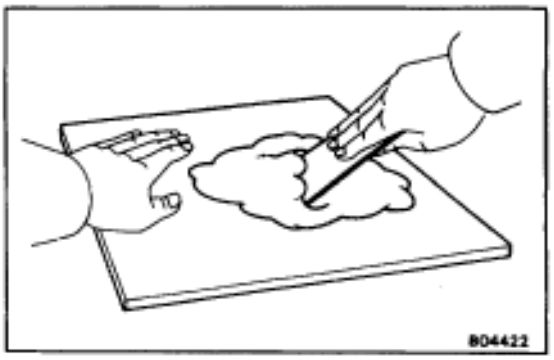

10. MIX ADHESIVE COATING

NOTICE:

- **Be sure that installation of the moulding is finished within the adhesive's usable time. (See step 2 on page BO–7)**
- **The mixture should be made in 5 minutes or less.**

(a) Thoroughly clean the glass plate and putty spatula with solvent.

(b) Thoroughly mix 500 g (17.64 oz.) of the main agent and 75 g (2.65 oz.) of the hardening agent on a glass plate or similar object with a putty spatula.

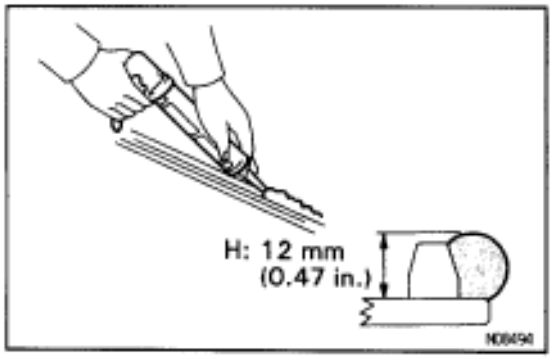

11. APPLY ADHESIVE

(a) Cut off the tip of the cartridge nozzle. Fill the cartridge with adhesive.

(b) Load the cartridge into the sealer gun.

(c) Coat the glass with adhesive as shown.
H: 12 mm (0.47 in.)

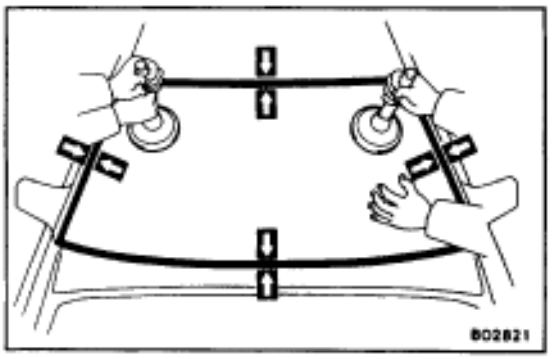

12. INSTALL GLASS

(a) Position the glass so that the reference marks are lined up, and press in gently along the rim.

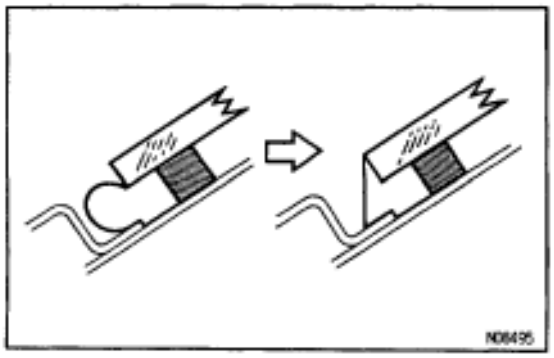

(b) Using a spatula, apply adhesive on the glass rim.
HINT: Confirm that the dam is attached to the body panel as shown in the illustration.

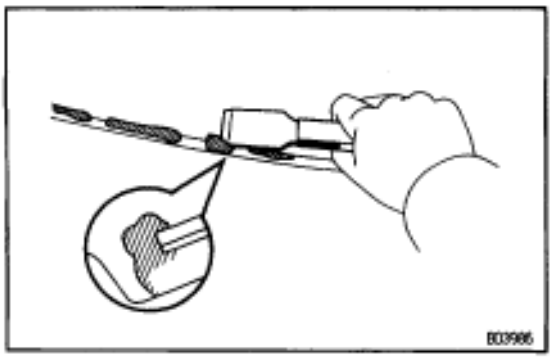

(c) Use a scraper to remove any excess or protruding adhesive.
(d) Fasten glass securely until the adhesive sets.

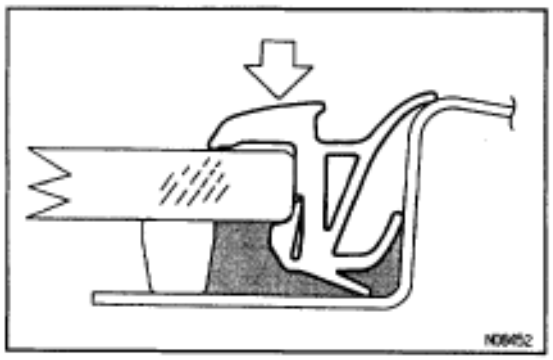

13. INSTALL WINDSHIELD MOULDING

Place the moulding onto the body and install it by hand.

14. INSPECT FOR LEAKS AND REPAIR

(a) Do a leak test after the hardening time has elapsed.
(b) Seal any leak with auto glass sealer.
Part No. 08833–00030

15. INSTALL THESE PARTS:

(a) Cowl top ventilator louver
(b) Wiper arms and blades
Torque: 22 N·m (225 kgf·cm, 16 ft·lbf)
(c) Hood
Torque: 13 N·m (130 kgf·cm, 9.4 ft·lbf)
(d) Front pillar garnishes
(e) Assist grip
(f) Sunvisors and holders
(g) Inner rear view mirror

QUARTER WINDOW GLASS
COMPONENTS

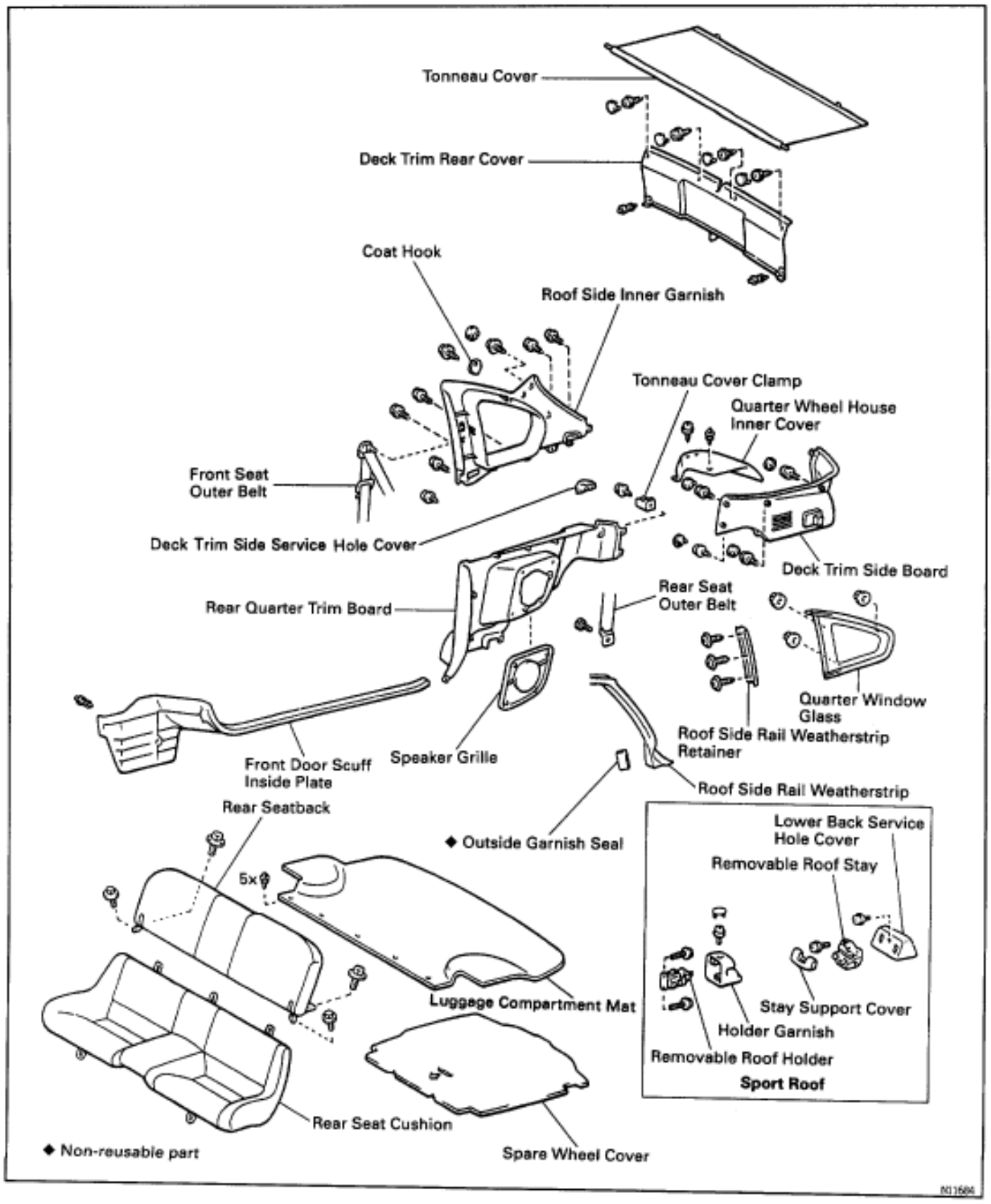

QUARTER WINDOW GLASS REMOVAL

1. REMOVE THESE PARTS:
(See pages BO–59 to BO–61)

(a) Tonneau cover
(b) Luggage compartment mat
(c) Spare wheel cover
(d) Rear seatback
(e) Removable roof stay RH and LH (Sport roof)
(f) Deck trim rear cover
(g) Removable roof holder (Sport roof)
(h) Quarter wheel house inner cover
(i) Speaker grille
(j) Deck trim side board
(k) Front door scuff inside plate
(l) Rear quarter trim board
(m) Front seat outer belt shoulder anchor
(n) Rear seat outer belt floor anchor
(o) Roof side inner garnish
(p) Rear roof headlining (Sport roof)

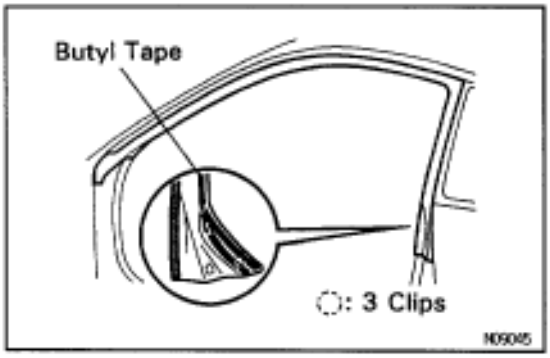

2. REMOVE ROOF SIDE RAIL WEATHERSTRIP

(a) Using the clip remover, remove 3 clips from the rear side of the weatherstrip.
(b) Remove the rear side of the weatherstrip from the retainer.

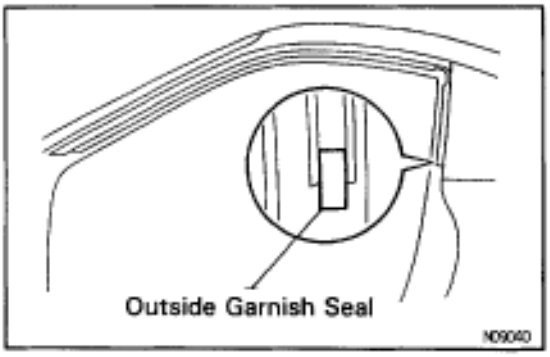

3. REMOVE ROOF SIDE RAIL WEATHERSTRIP RETAINER

Remove the outside garnish seal and retainer.

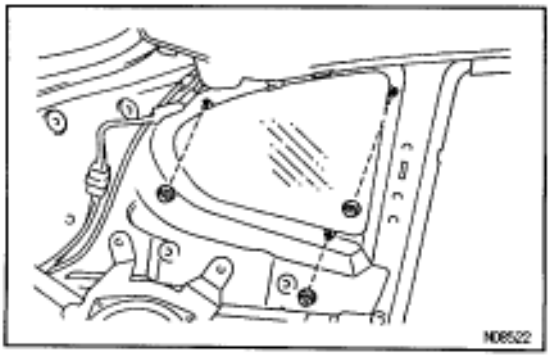

4. REMOVE QUARTER WINDOW GLASS

(a) Remove the 3 nuts.

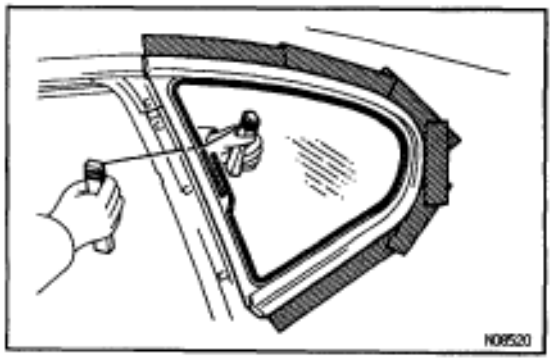

(b) Push piano wire through from the interior.

(c) Tie both wire ends to a wooden block or similar object.
HINT: Apply adhesive tape to the outer surface to keep the surface from being scratched.
NOTICE: When separating the glass, take care not to damage the paint and exterior.

(d) Cut the adhesive by pulling the piano wire around it.
HINT: Cut the adhesive areas in the order as shown in the illustration, so leave the adhesive where the glass retainer stays.

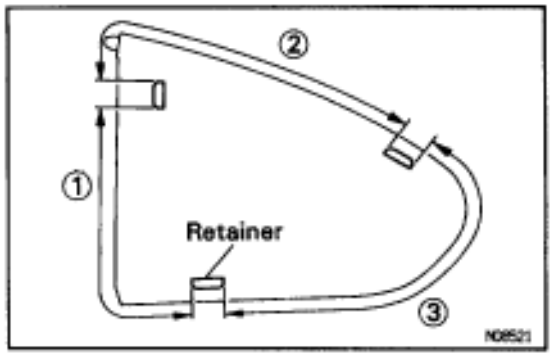

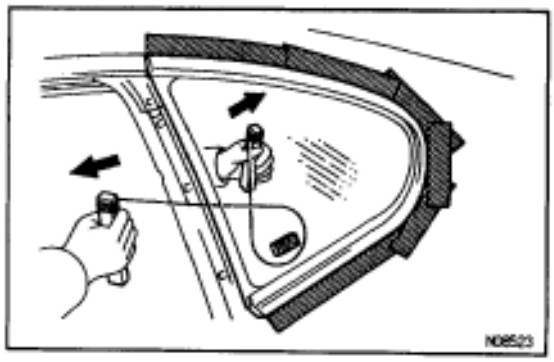

(e) Let the piano wire pass as shown on the illustration and cut the rest of adhesive by pulling the piano wire.
NOTICE: Do not damage the glass retainers.

(f) Remove the glass.
NOTICE: Leave as much of the adhesive on the body as possible when cutting off the glass.

QUARTER WINDOW GLASS INSTALLATION

Installation is in the reverse order of removal.

BACK DOOR MOULDING AND GLASS

COMPONENTS

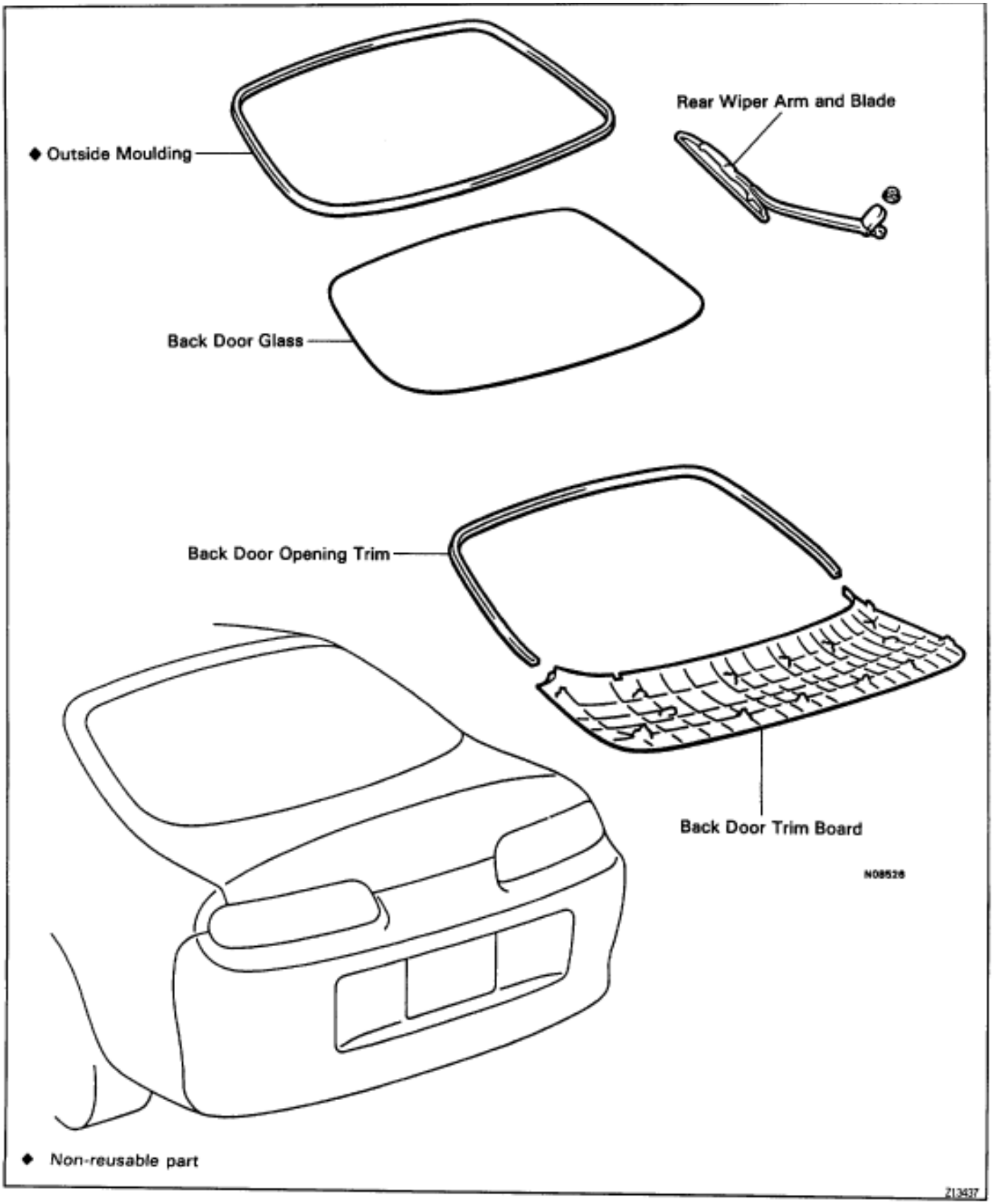

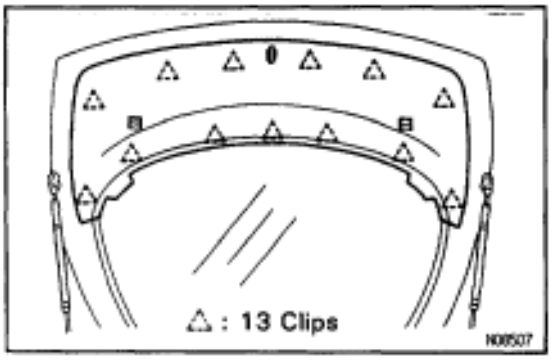

BACK DOOR MOULDING AND GLASS REMOVAL

1. DISCONNECT DEFOGGER CONNECTOR

2. REMOVE THESE PARTS:

(a) Rear wiper arm and blade
(b) Back door trim board
(c) Back door opening trim

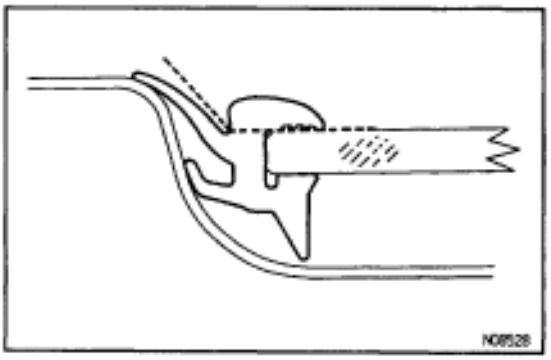

3. REMOVE BACK DOOR MOULDING

Using a knife, cut off the moulding as shown.

NOTICE: Do not damage the body with the knife.

4. REMOVE BACK DOOR GLASS AND MOULDING

HINT: Remove the glass and moulding in the same manner as the windshield. (See pages BO–31 and 32)

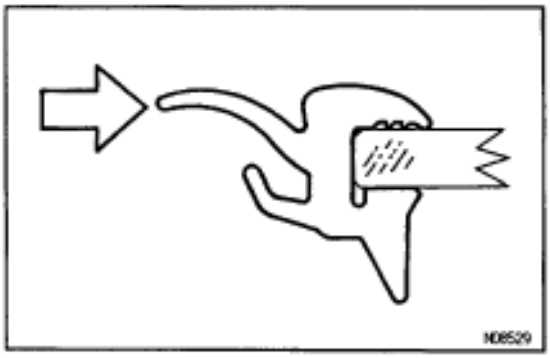

BACK DOOR MOULDING AND GLASS INSTALLATION

1. INSTALL BACK DOOR MOULDING

Place the moulding around the glass and install it by hand.

HINT: Always remove the back door glass to install the moulding.

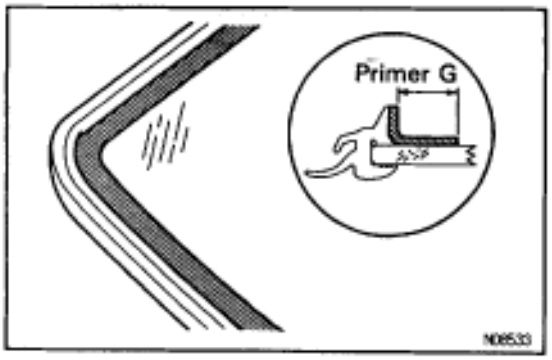

2. INSTALL BACK DOOR GLASS

HINT: Install the glass in the same manner as the windshield. (See pages BO–32 to 35)

(a) Coat contact surface of the glass with primer ”G”.

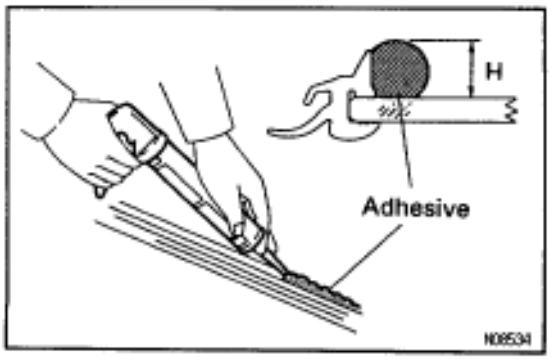

(b) Apply adhesive.

H: 12 mm (0.47 in.)

3. INSTALL THESE PARTS:

(a) Back door opening trim
(b) Back door trim board
(c) Rear wiper arm and blade

Torque: 11 N·m (110 kgf·cm, 8.0 ft·lbf)

4. CONNECT DEFOGGER CONNECTOR

SPORT ROOF
COMPONENTS

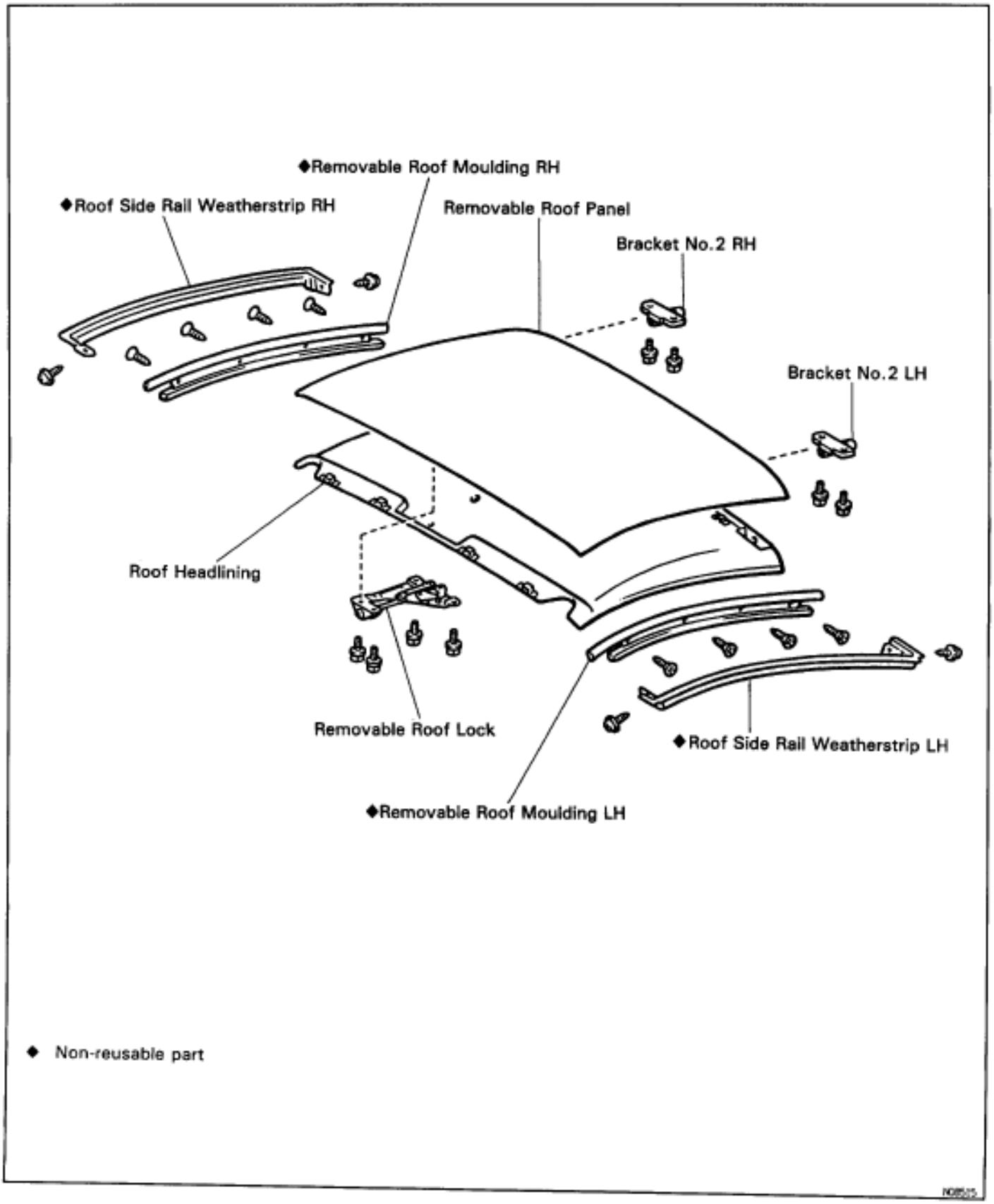

ON–VEHICLE INSPECTION

INSPECT REMOVABLE ROOF PANEL ALIGNMENT

(a) With the removable roof installed, check for water leakage.

(b) Check for a difference in clearance and level between the removable roof panel and roof panel.

Clearance:

Front side: 6.0±1.5 mm (0.236±0.06 in.)

Rear side: 6.0±1.5 mm (0.236±0.06 in.)

Level: (Rear side)

RH/LH side: +1.5 ~–2.0 mm (+0.06~–0.08 in.)

Center: +1.0~–2.0 mm (+0.04~–0.08 in.)

Zero level: upper surface of roof panel

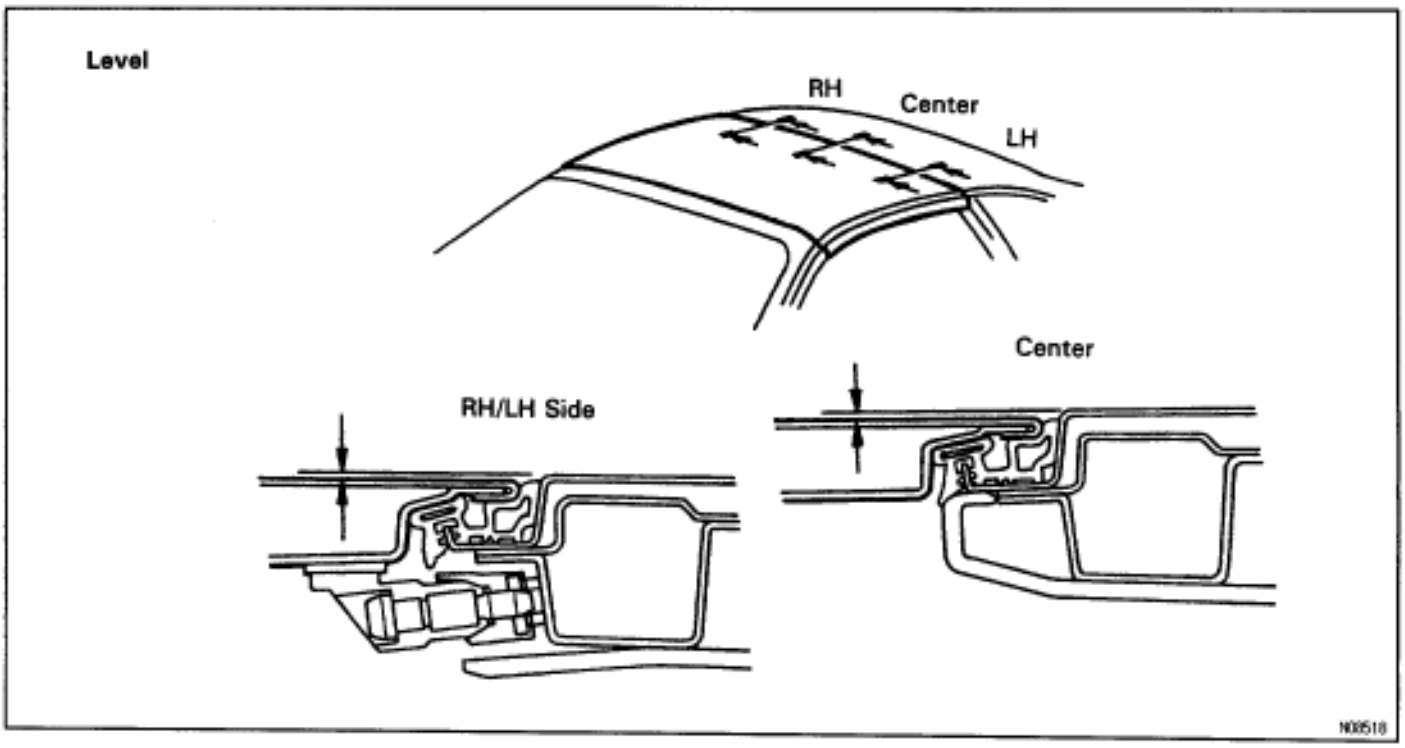

REMOVABLE ROOF ADJUSTMENT

1. REMOVE ROOF HEADLINING

(a) Removable roof headlining – for clearance adjustment (See pages BO–41 and 61)

(b) Rear roof headlining – for level adjustment (See pages BO–58 to 61)

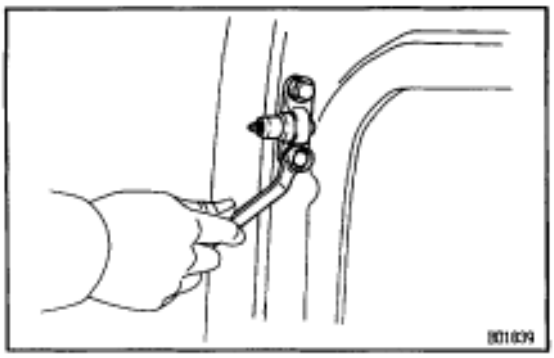

2. ADJUST CLEARANCE

Adjust the removable roof bracket by loosening the removable roof bracket bolts.

If the clearance is not within specification, repair the body panel.

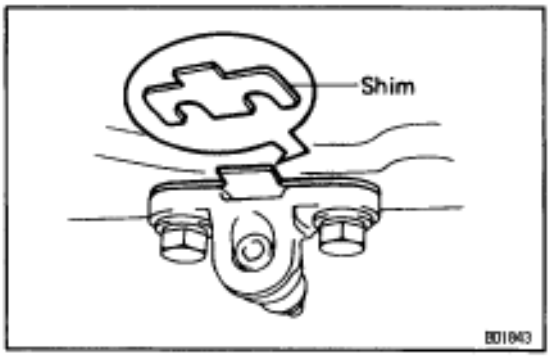

3. ADJUST LEVEL

Select the shim that makes the difference between the rear side of removable roof panel and rear roof panel a minimum.

Shim thickness:

1.0 mm (0.039 in.)

2.0 mm (0.079 in.)

4. INSTALL ROOF HEADLINING

Installation is in the reverse order to removal.

REMOVABLE ROOF DISASSEMBLY AND ASSEMBLY

1. DISASSEMBLE THESE PARTS:

(a) Roof side rail weatherstrip
(b) Removable roof moulding
(c) Roof headlining
(d) Removable roof lock
(e) Bracket No.2

2. ASSEMBLE THESE PARTS:

(a) Bracket No.2
(b) Removable roof lock
(c) Roof headlining
(d) Removable roof moulding

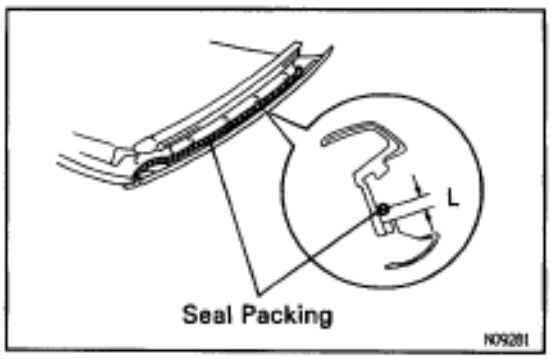

3. APPLY SEAL PACKING

Apply seal packing on the removable roof moulding as shown in the illustration.

L: 4 mm (0.16 in.)

Part No. 08826–00080

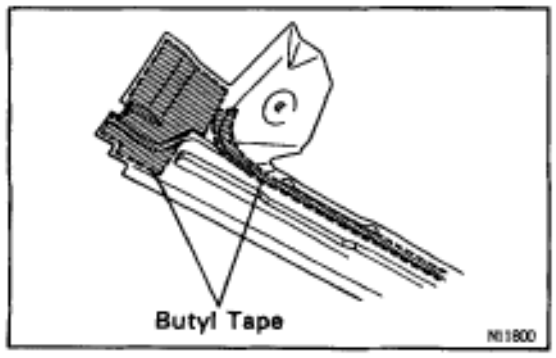

4. INSTALL ROOF SIDE RAIL WEATHERSTRIP

INSTRUMENT PANEL
COMPONENTS

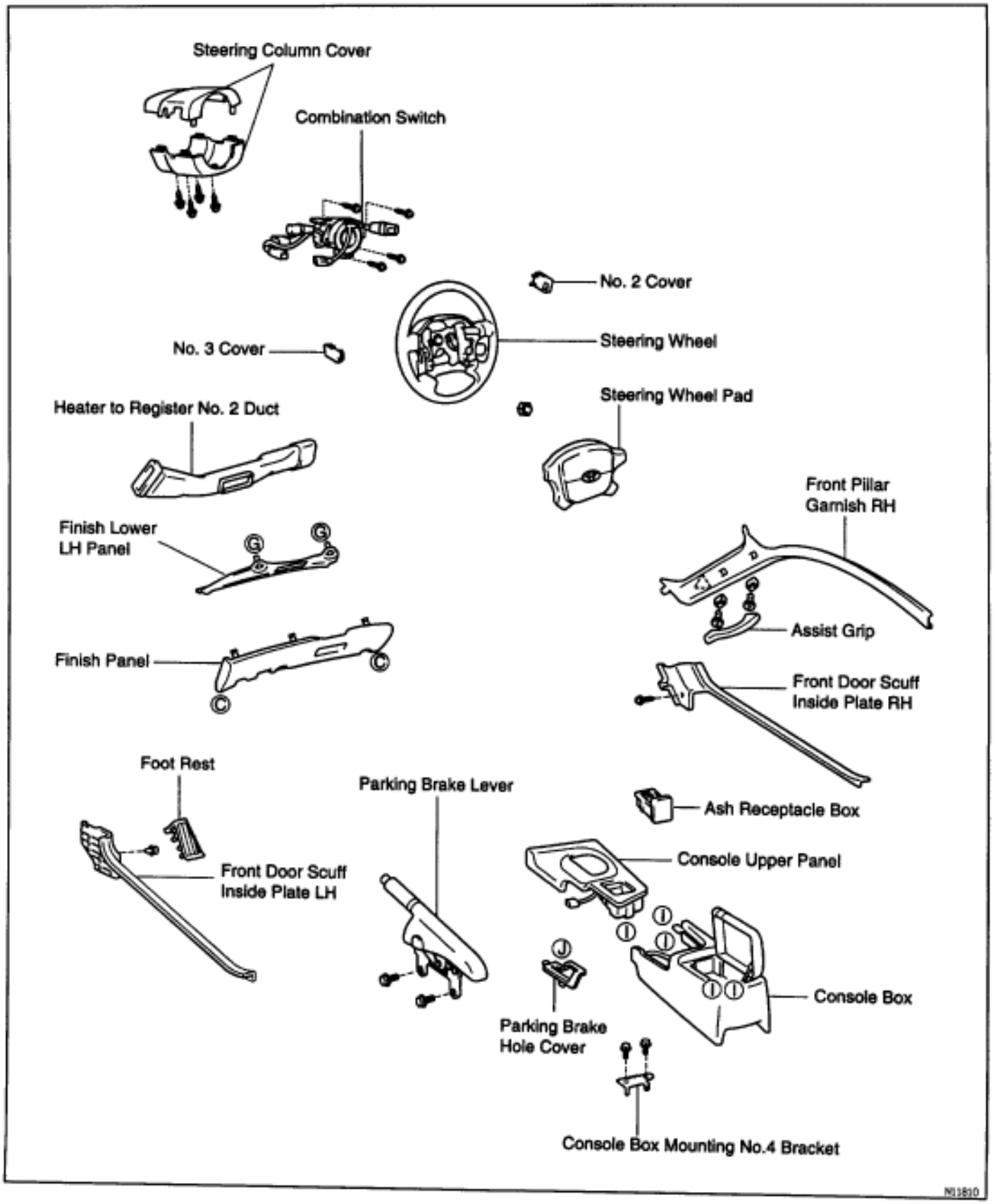

COMPONENTS (Cont'd)

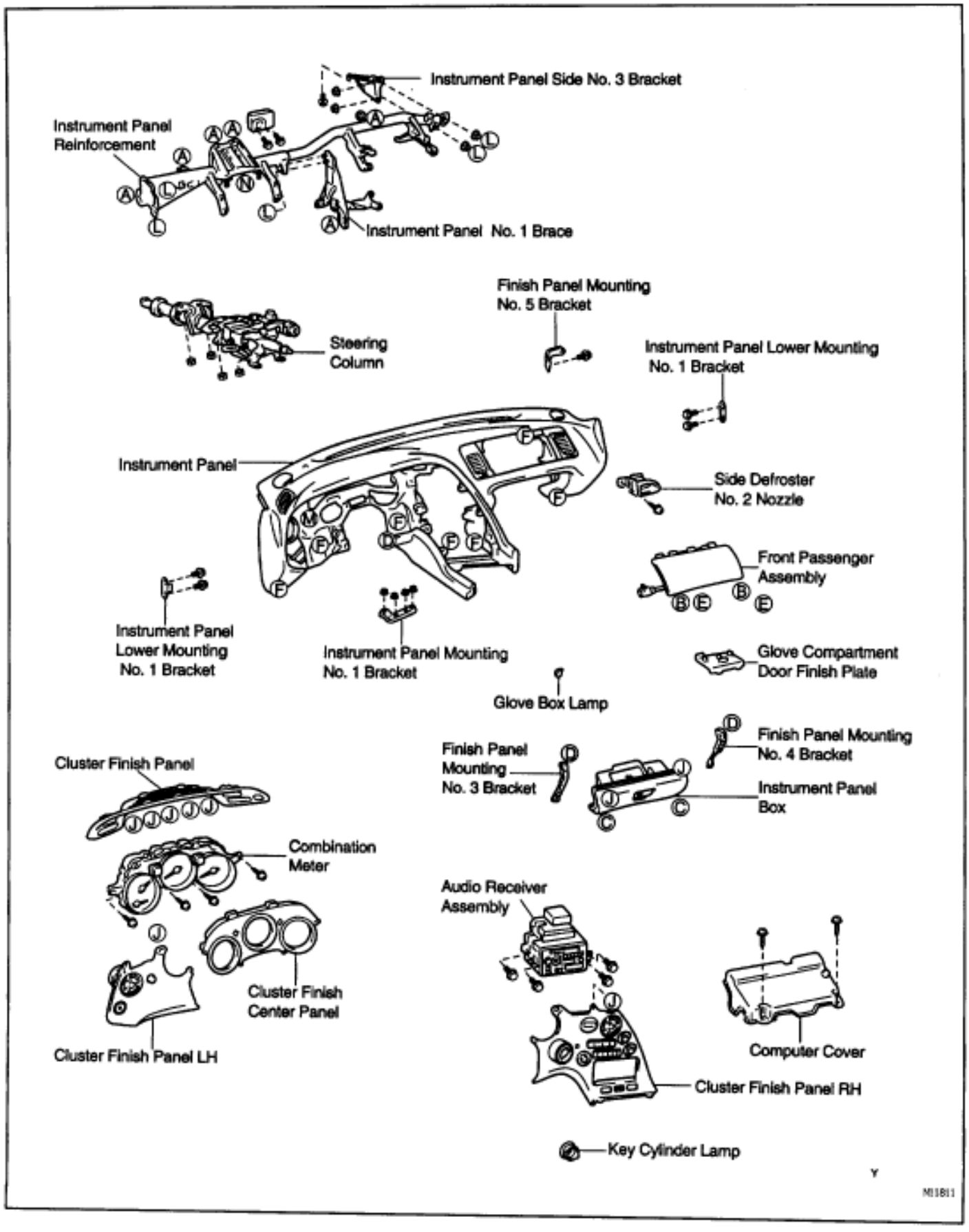

COMPONENTS (Cont'd)

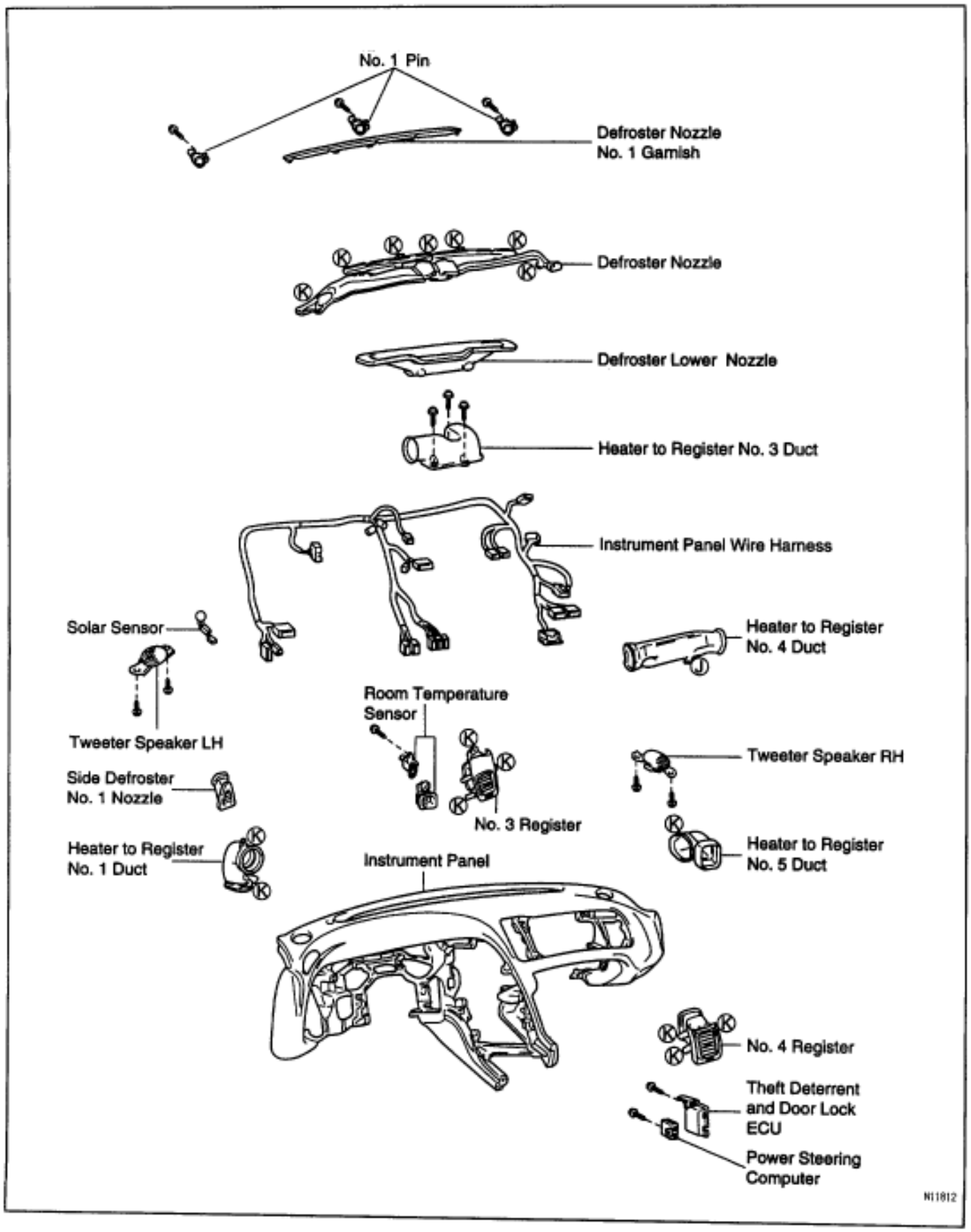

HINT: Screws in the illustration on the previous pages are indicated using the code below for removal and installation of instrument panel.

mm(in.)

	Shape	Size		Shape	Size		Shape	Size
Ⓐ	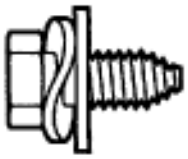	Ø = 8 (0.31) L = 20 (0.79)	Ⓑ	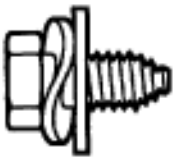	Ø = 8 (0.31) L = 18 (0.71)	Ⓒ	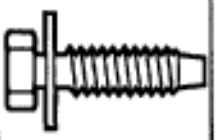	Ø = 6 (0.24) L = 25 (0.98)
Ⓓ		Ø = 6 (0.24) L = 23 (0.91)	Ⓔ	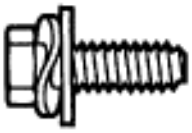	Ø = 6 (0.24) L = 22 (0.87)	Ⓕ	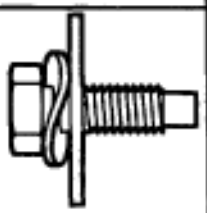	Ø = 6 (0.24) L = 20 (0.79)
Ⓖ		Ø = 6 (0.24) L = 16 (0.63)	Ⓗ		Ø = 5 (0.20) L = 12 (0.47)	Ⓘ	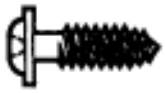	Ø = 5 (0.20) L = 18 (0.71)
Ⓙ	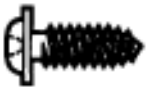	Ø = 5.22 (0.2055) L = 16 (0.63)	Ⓚ		Ø = 5 (0.20) L = 14 (0.55)	Ⓛ		Ø = 8 (0.31)
Ⓜ		Ø = 6 (0.24)	Ⓝ	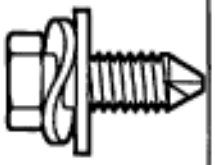	Ø = 8 (0.31) L = 25 (0.98)			

M11774

INSTRUMENT PANEL REMOVAL

1. REMOVE STEERING WHEEL

(See page SR–14)

CAUTION:

- **When storing the wheel pad, keep the upper surface of the pad facing upward.**
- **Never disassemble the steering wheel pad.**

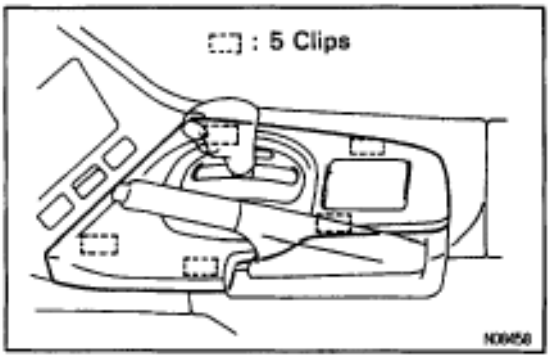

2. REMOVE THESE PARTS:

HINT: Tape a screwdriver tip before use.

(a) Front pillar garnishes
(b) Assist grip
(c) Foot rest
(d) Front door scuff inside plates
(e) Steering column cover
(f) Console upper panel

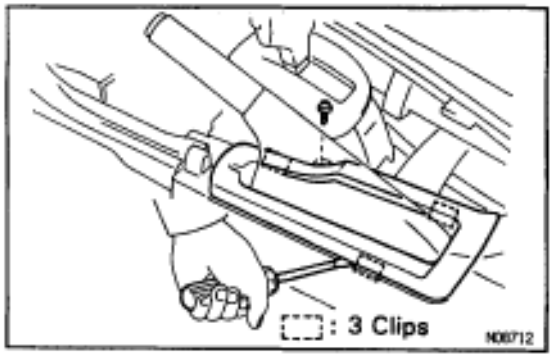

(g) Parking brake hole cover
(h) Console box

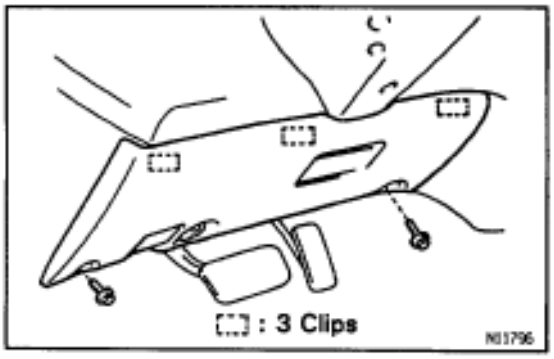

(i) Finish panel
(j) Finish lower LH panel

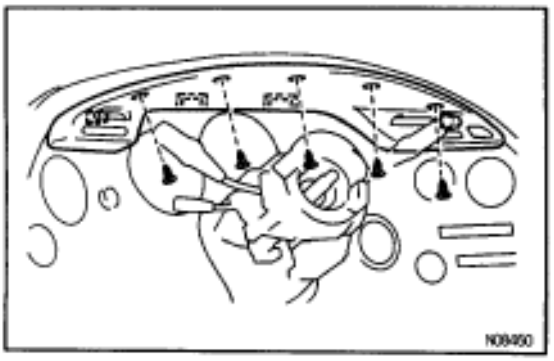

(k) Cluster finish panel

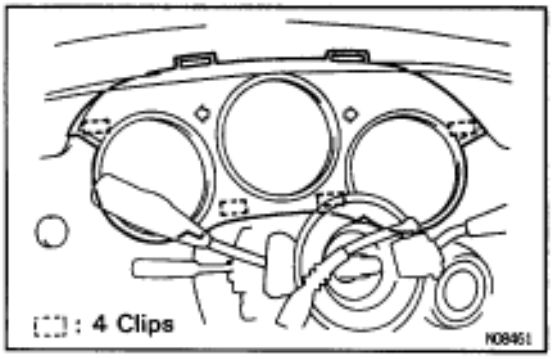

(l) Cluster finish panel center

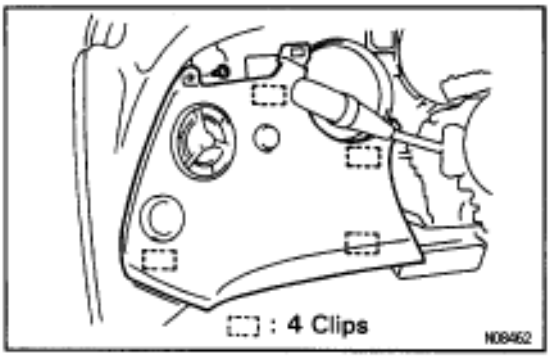

(m) Cluster finish panel LH

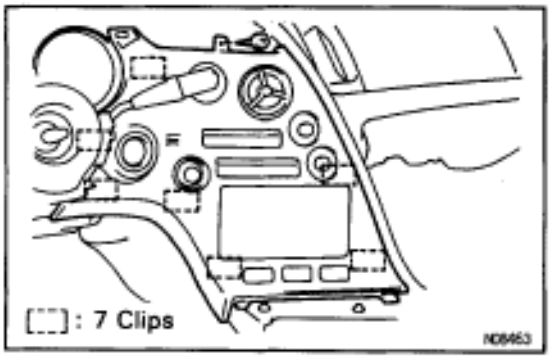

(n) Cluster finish panel RH
(o) Combination meter
(p) Heater to register No.2 duct
(q) Combination switch
(r) Audio receiver assembly
(s) Computer cover

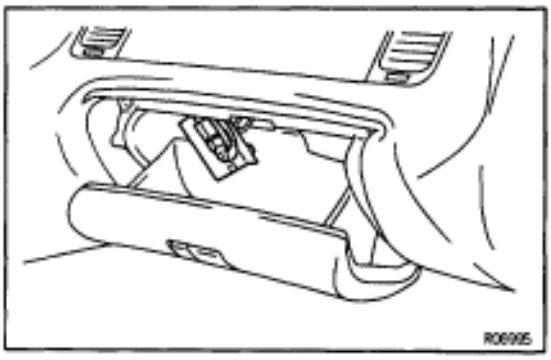

3. REMOVE INSTRUMENT PANEL BOX

HINT: Tape a screwdriver tip before use.

(a) Remove the glove compartment door finish plate inside the instrument panel box.

NOTICE: When handling the airbag connector, take care not to damage the airbag wire harness.

(b) Pull up and disconnect the airbag connector.

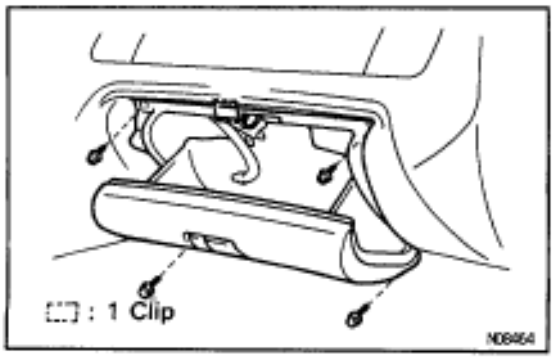

(c) Remove the instrument panel box.

4. REMOVE THESE PARTS

(a) Finish panel mounting No.3 and 4 bracket
(b) Heater to register No.4 duct
(c) Finish panel mounting No.2 bracket

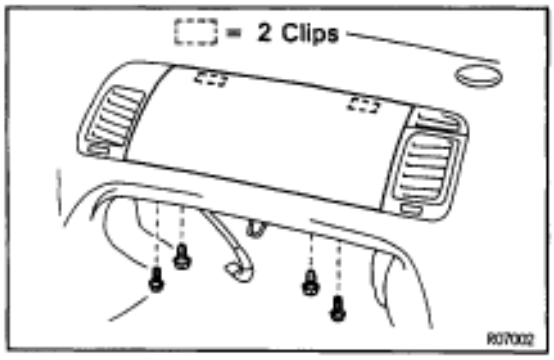

5. REMOVE FRONT PASSENGER AIRBAG ASSEMBLY

(a) Remove the 4 bolts and 2 clips.

(b) Remove the front passenger airbag assembly.

CAUTION:

- **Do not store the front passenger airbag assembly with the airbag door facing down.**
- **Never disassemble the front passenger airbag assembly.**

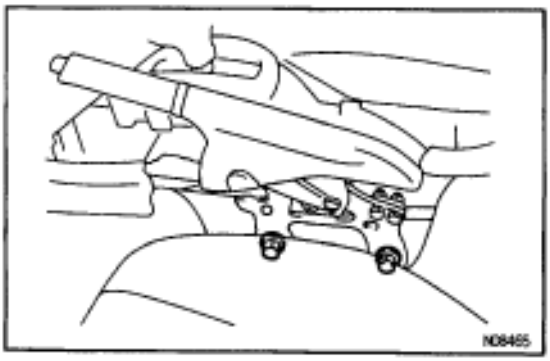

6. REMOVE THESE PARTS

(a) Parking brake lever (2 bolts)

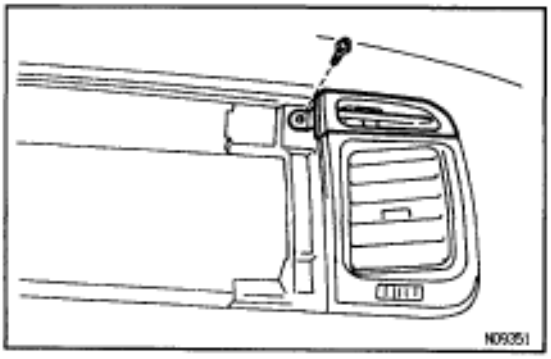

(b) Side defroster No.2 nozzle

(c) Steering column (4 nuts)

Torque: 25 N·m (260 kgf·cm, 19 ft·lbf)

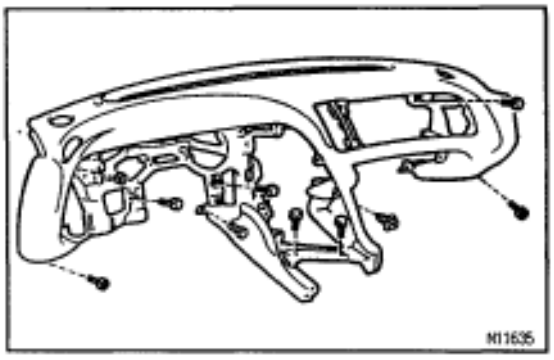

6. REMOVE INSTRUMENT PANEL

(a) Disconnect the connectors.

(b) Remove the nut, screw, 8 bolts and the instrument panel.

Torque: 8.8 N·m (90 kgf·cm, 78 ft·lbf)

7. REMOVE INSTRUMENT PANEL REINFORCEMENT

(a) Remove 6 bolts, 6 nuts and the instrument panel reinforcement.

Torque: 21 N·m (210 kgf·cm, 15 ft·lbf)

(b) Remove the bolt and the instrument panel No.1 brace.

(c) Remove the bolt, 2 nuts and the instrument panel side No.3 bracket.

INSTRUMENT PANEL DISASSEMBLY

1. REMOVE THESE PARTS FROM INSTRUMENT PANEL

(a) Defroster nozzle garnish
(b) Defroster nozzle
(c) Solar sensor
(d) Speakers
(e) Side defroster No.1 nozzle
(f) No.1 bracket
(g) Heater to register No.5 duct
(h) No.4 register
(i) Heater to register No.1 duct
(j) No.3 register
(k) Striker plate
(l) Instrument panel box light switch
(m) Room temperature sensor
(n) Theft deterrent and door lock ECU
(o) Power steering computer
(p) Audio mounting No.1 and No.2 bracket
(q) No.2 and No.3 bracket
(r) No.1 pins

2. REMOVE INSTRUMENT PANEL WIRE HARNESS

INSTRUMENT PANEL ASSEMBLY

Assembly is in the reverse order of disassembly.

INSTRUMENT PANEL INSTALLATION

Installation is in the reverse order of removal.

FRONT SEAT
COMPONENTS

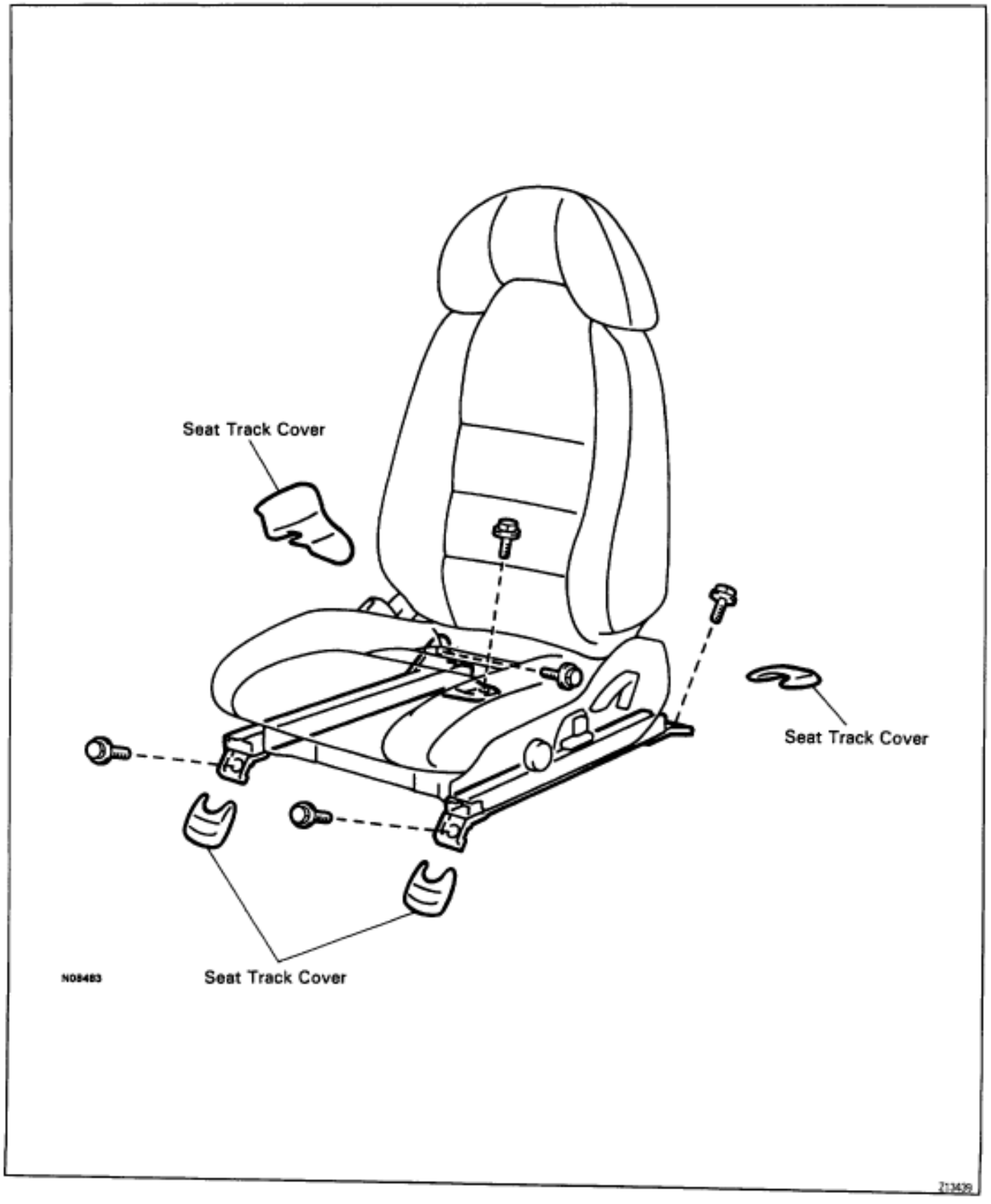

COMPONENTS (Cont'd)

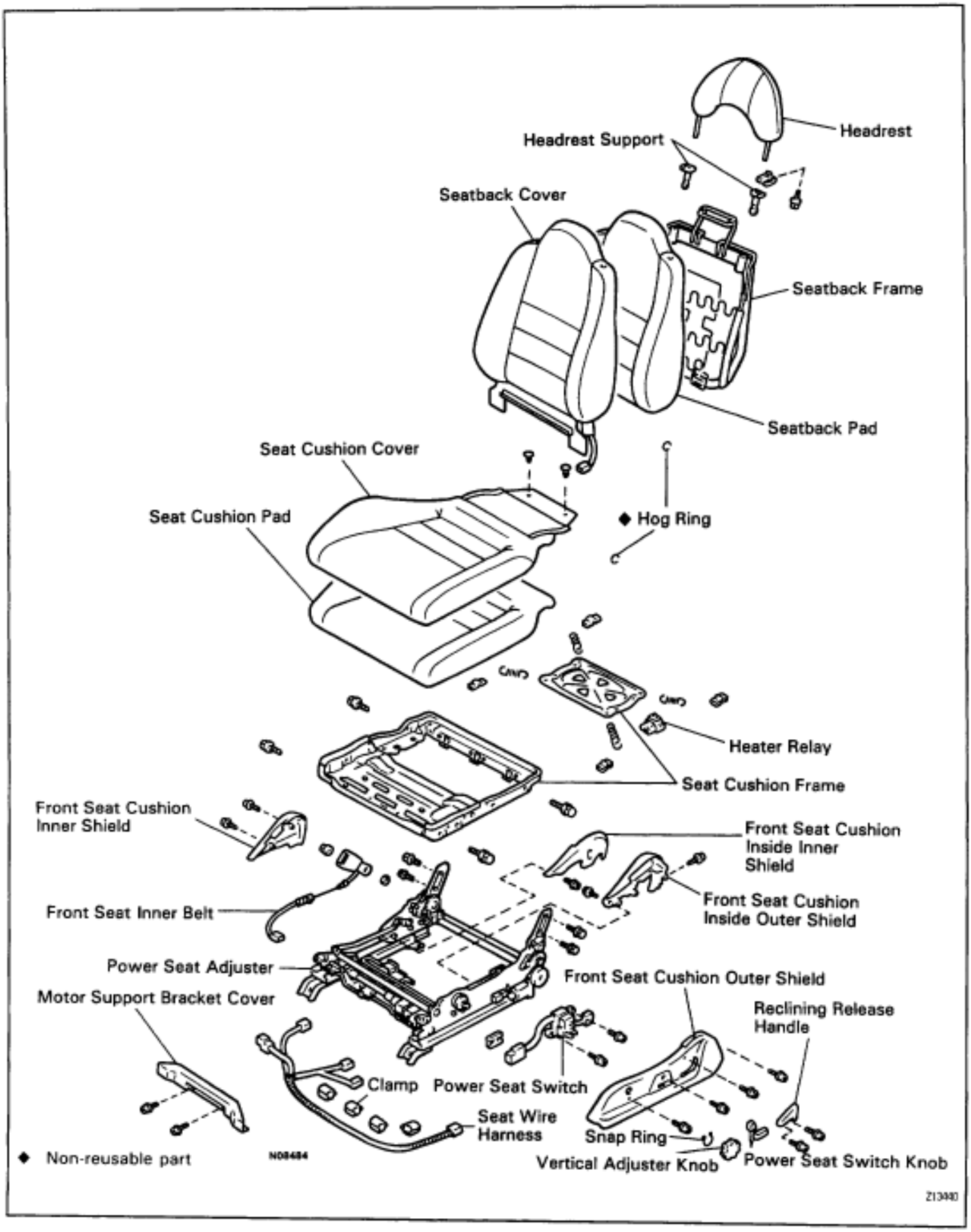

REAR SEAT
COMPONENTS

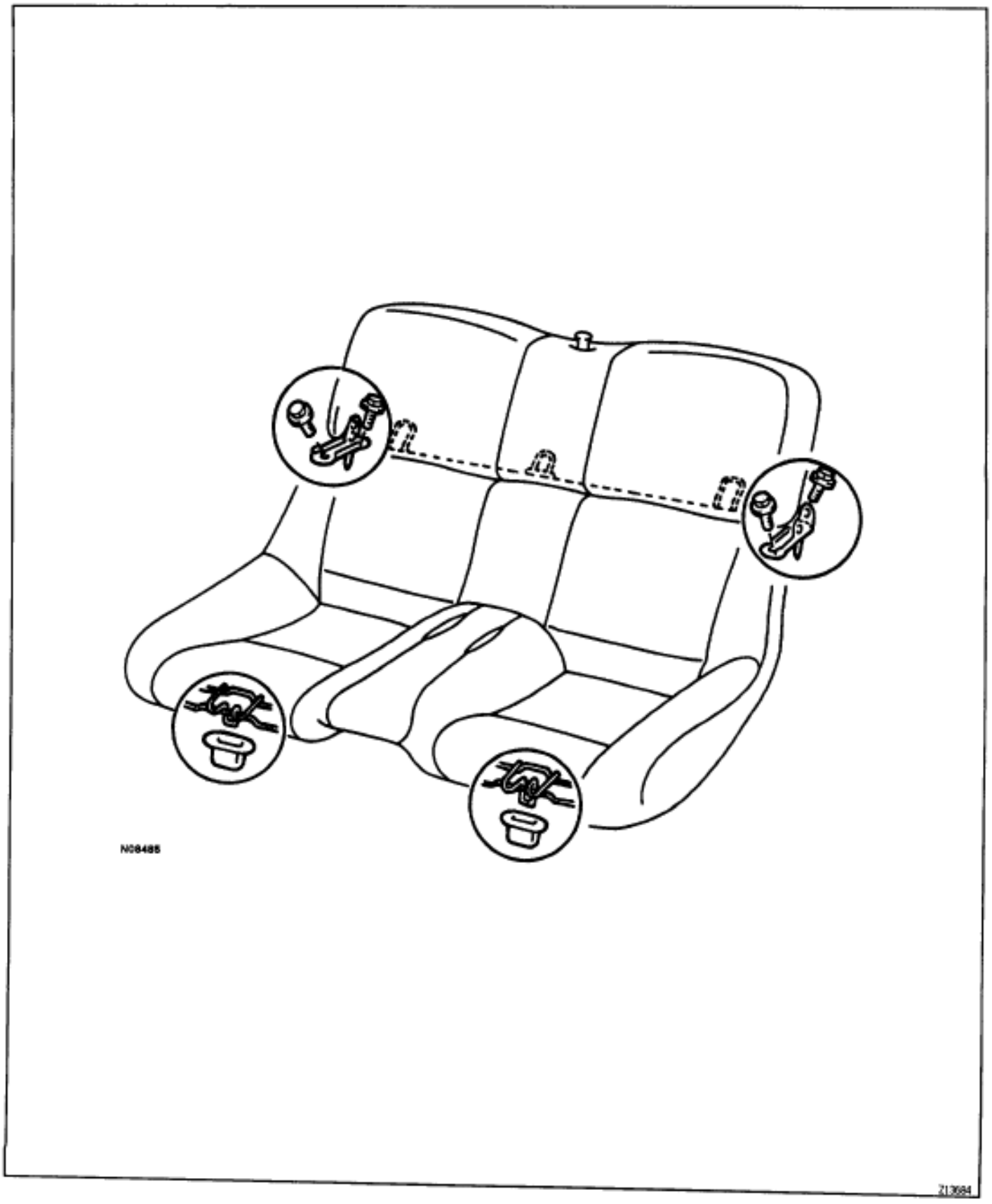

COMPONENTS (Cont'd)

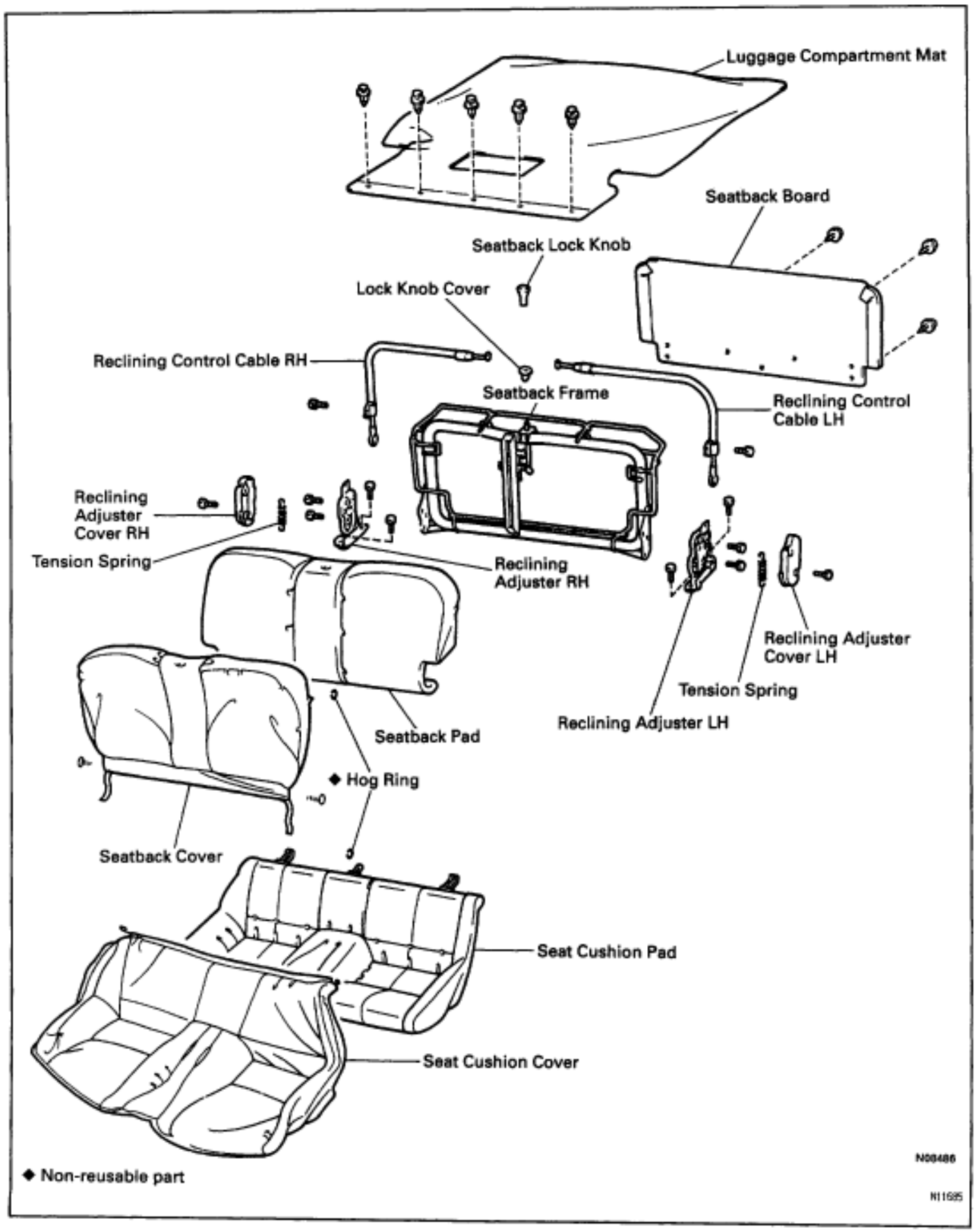

SEAT BELT
COMPONENTS

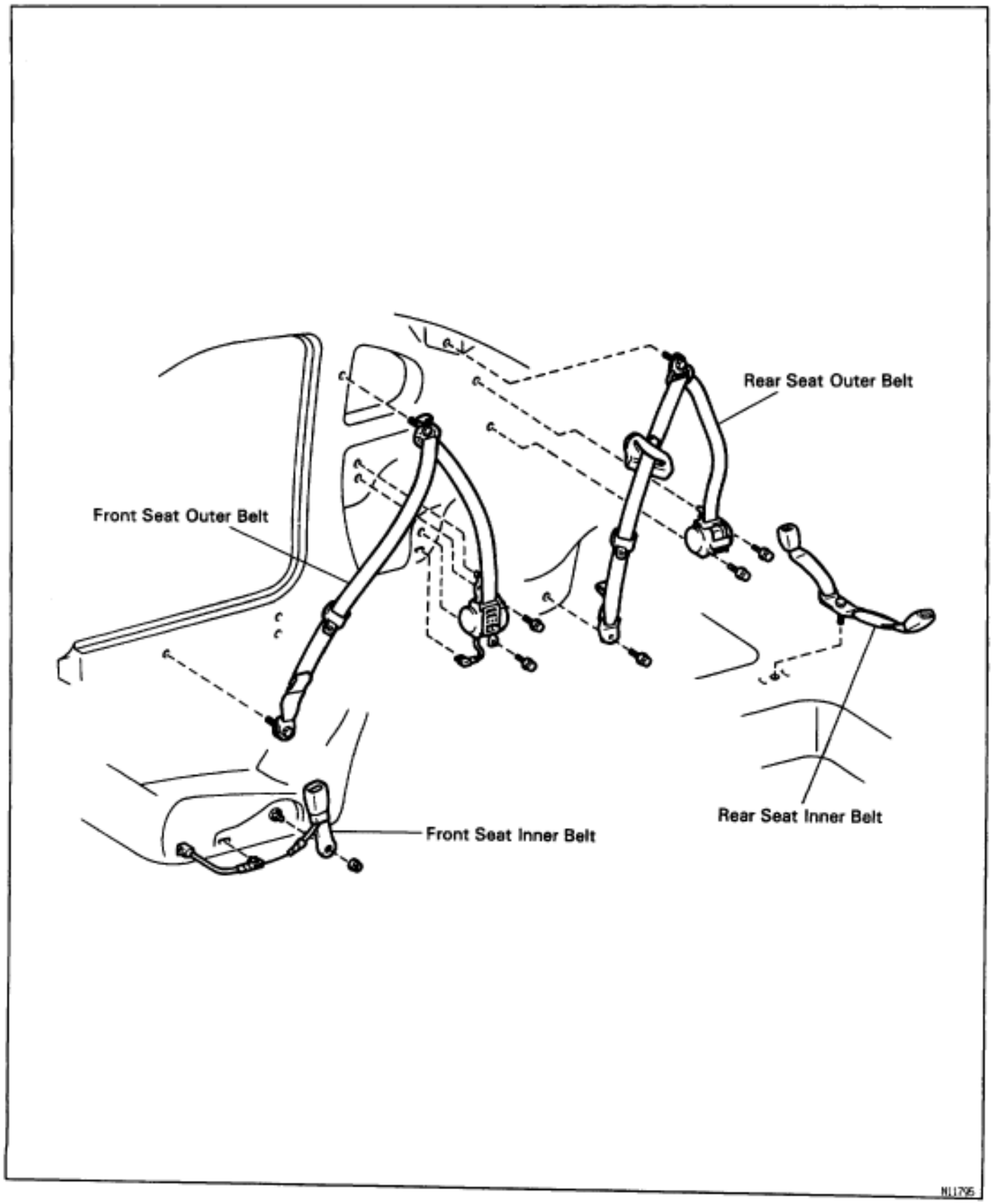

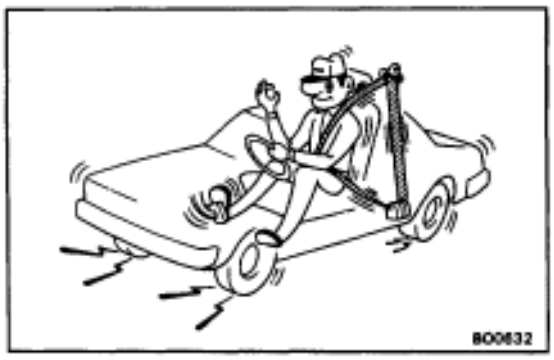

SEAT BELT INSPECTION

Emergency Locking Retractor (ELR) and Automatic Locking Retractor (ALR) type

1. RUNNING TEST (IN SAFE AREA)

for all seats:

(a) Fasten the front seat belts.

(b) Drive the car at 10 mph (16 km/h) and make a very hard stop.

(c) Check that the belt is locked and cannot be extended at this time.

HINT: Conduct this test in a safe area. If the belt does not lock, remove the belt mechanism assembly and conduct the following static check. Also, whenever installing a new belt assembly, verify the proper operation before installation.

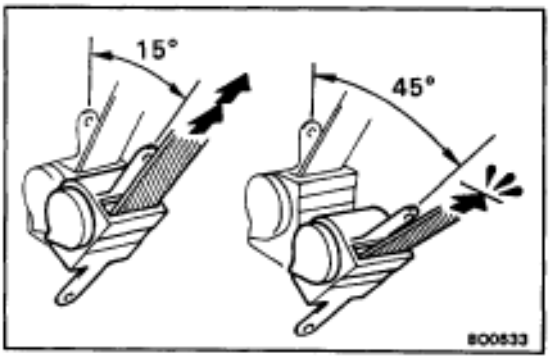

2. STATIC TEST

for all seats:

(a) Verify that the belt locks when pulled out quickly.

(b) Remove the locking retractor assembly.

(c) Tilt the retractor slowly.

(d) Verify that the belt can be pulled out at a tilt of 15 degrees or less, and cannot be pulled out at over 45 degrees of tilt.

If a problem is found, replace the assembly.

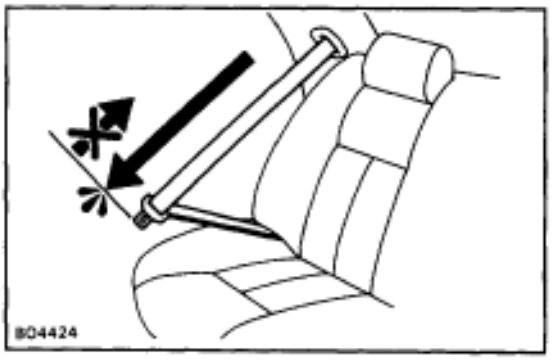

except for driver's seat:

(e) Pull out the whole belt, release it slightly and then pull it out again.

(f) Verify that the belt cannot be extended further.

If a problem is found, replace the assembly.

ROOF HEADLINING
COMPONENTS

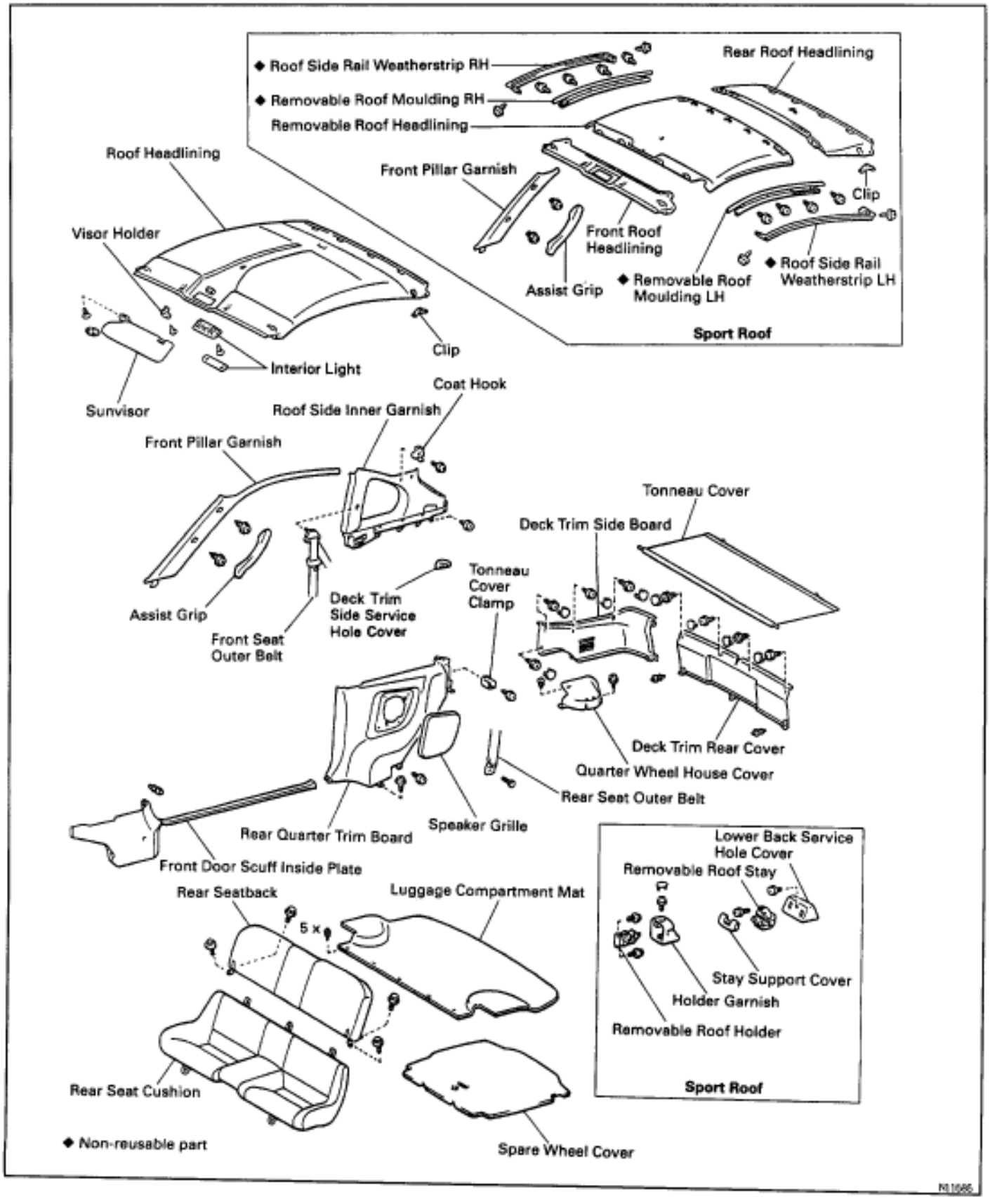

ROOF HEADLINING REMOVAL

1. REMOVE THESE PARTS:

(a) Tonneau cover
(b) Luggage compartment mat
(c) Spare wheel cover
(d) Rear seat cushion
(e) Rear seatback
Torque: 25 N·m (260 kgf·cm, 19 ft·lbf)

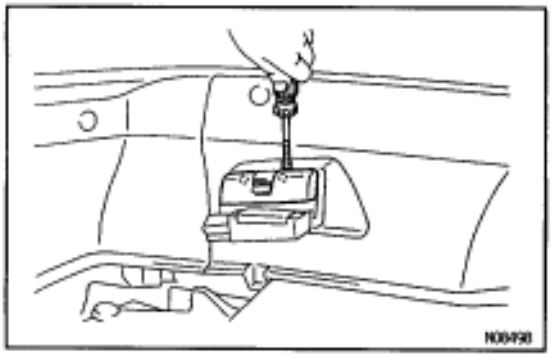

(f) Removable roof stay RH and LH (Sport roof)
(g) Deck trim rear cover
(h) Removable roof holder RH and LH (Sport roof)
(i) Quarter wheel house cover
(j) Deck trim side board

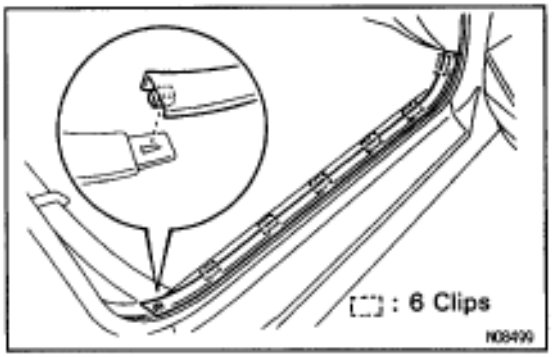

(k) Front door scuff inside plate

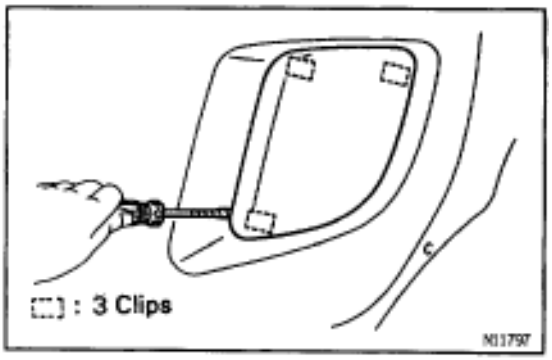

(l) Speaker grille

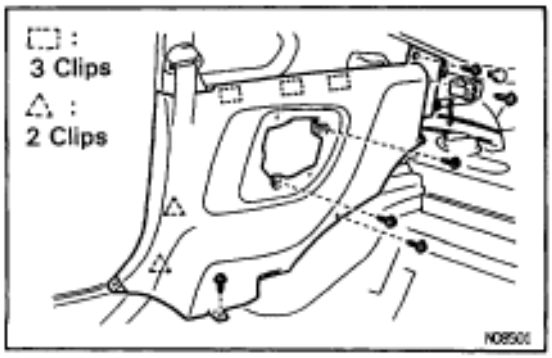

(m) Rear quarter trim board
(n) Front seat outer belt
(o) Rear seat outer belt

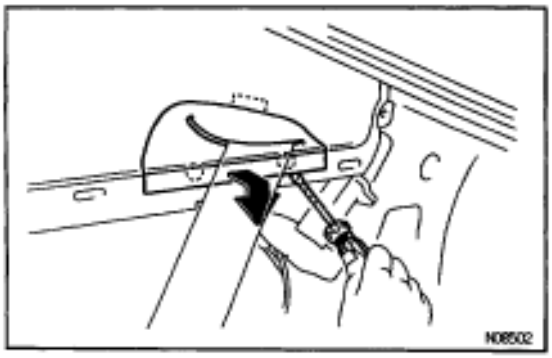

(p) Deck trim side service hole cover

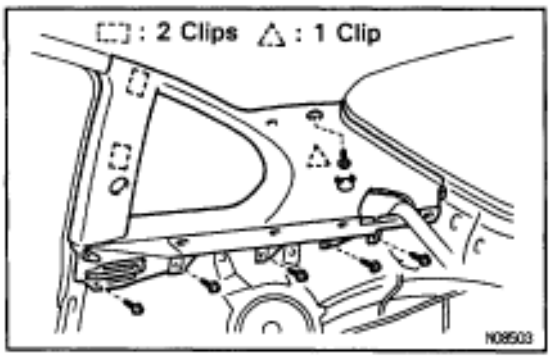

(q) Roof side inner garnish
(r) Removable roof (Sport roof)

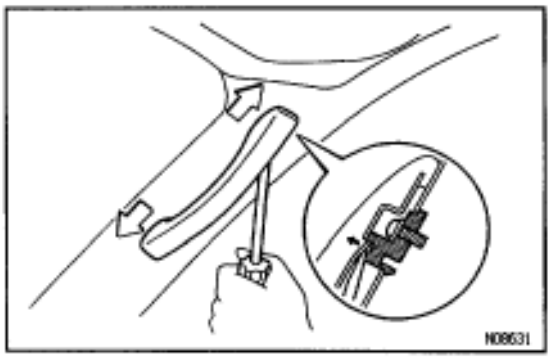

(s) Assist grip

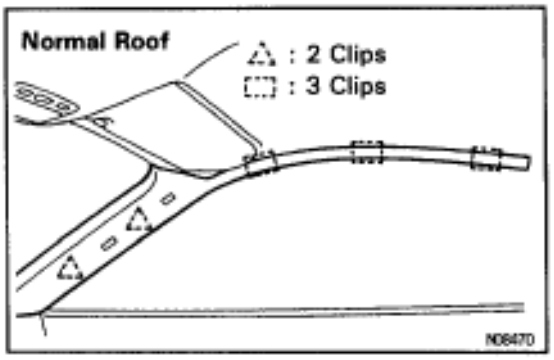

(t) Front pillar garnish
(u) Interior light
(v) Sunvisor and holder

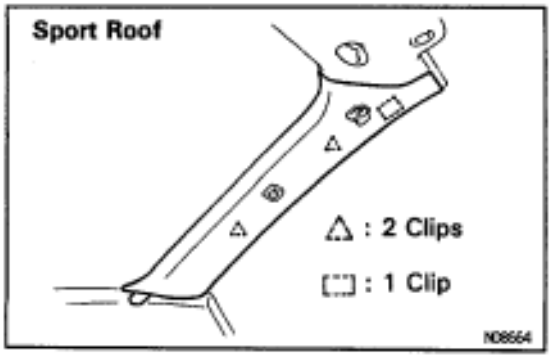

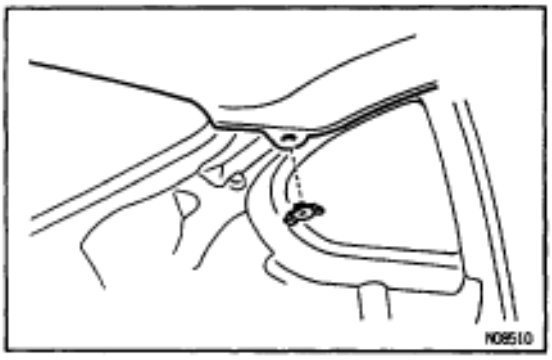

2. REMOVE ROOF HEADLINING

(a) Using a clip remover, remove the 2 clips.

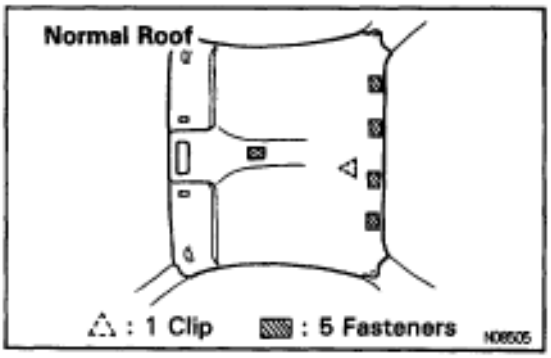

(b) Normal roof–Remove the roof headlining.

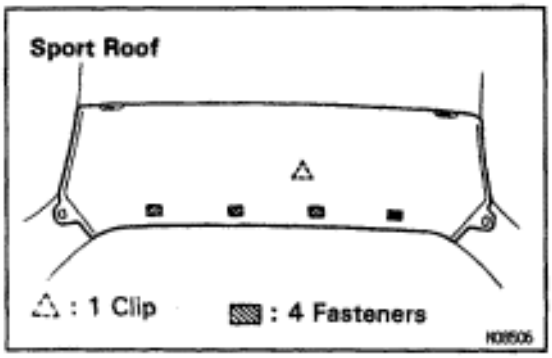

3. SPORT ROOF:
REMOVE ROOF HEADLINING

(a) Remove the rear roof headlining.

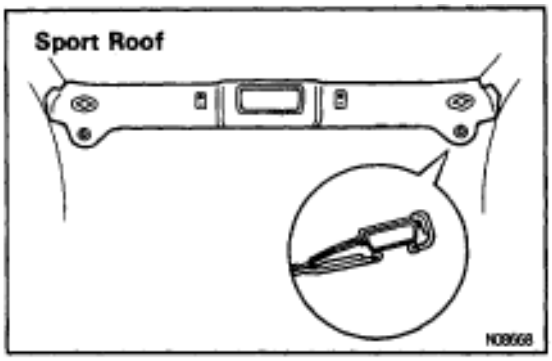

(b) Remove the front roof headlining.

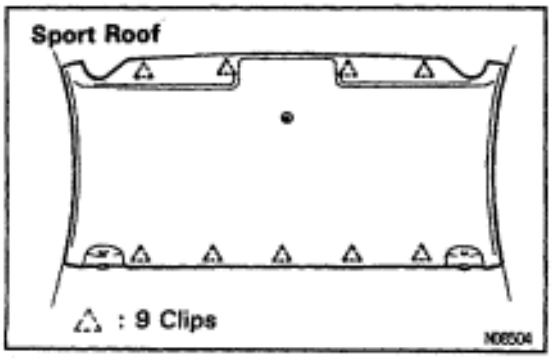

(c) Remove removable roof headlining
(See page BO–41)

ROOF HEADLINING INSTALLATION

Installation is in the reverse order of removal.

HINT: Torque these parts:

(a) Front seat belt shoulder anchor bolt
Torque: 43 N·m (440 kgf·cm, 32 ft·lbf)

(b) Front seat belt floor anchor bolt
Torque: 43 N·m (440 kgf·cm, 32 ft·lbf)

(c) Rear seat outer belt floor anchor bolt
Torque: 43 N·m (440 kgf·cm, 32 ft·lbf)

SERVICE SPECIFICATIONS
TORQUE SPECIFICATIONS

Part tightened	N·m	kgf·cm	ft·lbf
FRONT BUMPER	—	—	—
Reinforcement x Body	5.9	60	52 in.·lbf
Front bumper cover x Body	5.9	60	52 in.·lbf
REAR BUMPER	—	—	—
Reinforcement x Body	42	430	31
Rear bumper cover x Body	5.9	60	52 in.·lbf
HOOD	—	—	—
Hood hinge x Hood	13	130	9.4
Hood lock x Body	8.8	90	78 in.·lbf
FRONT DOOR	—	—	—
Door hinge x Body	52	530	38
Door hinge x Door panel	25	260	19
Door lock x Door panel	5.4	55	48 in.·lbf
Window regulator x Door panel	7.8	80	69 in.·lbf
Window guide lower plate x Door panel	5.9	60	52 in.·lbf
Door window upper stop x Door panel	13	130	9.4
BACK DOOR	—	—	—
Back door hinge x Body	21	210	15
Back door hinge x Back door	13	130	9.4
Door lock x Body	19	195	14
Door lock striker x Body	13	130	9.4
Back door damper stay x Body	5.9	60	52 in.·lbf
Back door damper stay x Back door	7.8	80	69 in.·lbf
WIPER AND WASHER	—	—	—
Front Wiper	—	—	—
Wiper arm x Wiper link	22	225	16
Rear Wiper	—	—	—
Wiper arm x Wiper motor	11	110	8.0
INSTRUMENT PANEL	—	—	—
Steering column x Instrument panel reinforcement	25	260	19
Front passenger airbag assembly x Instrument panel reinforcement	21	210	15
Front passenger airbag assembly x Instrument panel	8.8	90	78 in.·lbf
Steering wheel x Steering column	35	360	26
Steering wheel pad x Steering wheel	7.1	72	62 in.·lbf

TORQUE SPECIFICATIONS (Cont'd)

Part tightened	N·m	kgf·cm	ft·lbf
FRONT SEAT	–	–	–
Seat adjuster x Body	37	375	27
Seat adjuster x Seatback	18	185	13
Seat adjuster x Seat cushion	18	185	13
REAR SEAT	–	–	–
Seatback x Body	25	260	19
Reclining adjuster x Seatback	18	185	13
SEAT BELT	–	–	–
Front Seat Belt	–	–	–
Shoulder anchor x Body	43	440	32
Outer belt anchor x Body	43	440	32
Retractor x Body (Upper Side)	7.8	80	69 in.·lbf
Retractor x Body (Lower Side)	43	440	32
Inner belt x Seat	43	440	32
Rear Seat Belt	–	–	–
Shoulder anchor x Body	43	440	32
Outer belt anchor x Body	43	440	32
Retractor x Body	43	440	32
Inner belt x Body	43	440	32

BRAKE SYSTEM

GENERAL DESCRIPTION

1. **Care must be taken to replace each part properly as it could affect the performance of the brake system and result in a driving hazard. Replace the parts with parts of the same part number or equivalent.**
2. **It is very important to keep parts and the area clean when repairing the brake system.**
3. **If the vehicle is equipped with a mobile communication system, refer to the precaution in the IN section.**

PREPARATION

SST (SPECIAL SERVICE TOOLS)

	09023–00100	Union Nut Wrench 10 mm	
	09709–29017	LSPV Gauge Set	
	09718–20010	Brake Shoe Return Spring Replacer	
	09737–00010	Brake Booster Push Rod Gauge	
	09751–36011	Brake Line Union Nut 10 x 12 mm Wrench	
	09843–18020	Diagnosis Check Wire	
	09990–00150	ABS Actuator Checker and Sub–harness	
	09990–00163	ABS Actuator Checker Sheet “A”	
	09990–00200	ABS Actuator Checker Sub–harness “C”	w/o TRAC
	09990–00210	ABS Actuator Checker Sub–harness “E”	
	09990–00250	ABS Actuator Checker Sub–harness “G”	w/ TRAC
	09990–00280	ABS Actuator Checker Sub–harness “H”	w/ TRAC
	09990–00330	TRAC Actuator Air Bleed Wire	w/ TRAC

RECOMMENDED TOOLS

	09082–00050 TOYOTA Electrical Tester Set ◆	
	09905–00013 Snap Ring Pliers ◆	

EQUIPMENT

Torque wrench	
Micrometer	Brake disc
Dial indicator	Brake disc
Vernier calipers	Brake disc

LUBRICANT

Item	Capacity	Classification
Brake fluid	–	SAEJ1703 or FMVSS No.116, DOT 3

TROUBLESHOOTING

Use the table below to help you find the cause of the problem. The numbers indicate the priority of the likely cause of the problem. Check each part in order. If necessary, replace these parts.

Trouble / Part Name	Brake system (fluid leaks)	Brake system (Air in)	Brake pad (Worn)	Piston seal (Worn or damaged)	Brake pedal (freeplay minimal)	Master cylinder (Faulty)	Parking brake (Shoe clearance out of adjustment)	Parking brake (Lever travel out of Adjustment)	Parking brake wire (Sticking)	Booster push rod (Out of adjustment)	Tension or return spring (Faulty)	Pad (Cracked or distorted)	Piston (Stuck)	Pad (Only)	Piston (Frozen)	Booster system (Vacuum leaks)	Pad support plate (Loose)	Installation bolt (Loose)	Sliding pin (Worn)	Disc (Scored)	Pad (Dirty)	Pad (Glazed)	Anti–squeal shim (Damaged)	Hold–down spring (Damaged)
See page	—	—	BR–17,22,26,31	BR–17,22,26,31	BR–6	BR–11	BR–39	BR–10	—	BR–16	BR–35	BR–17,22,26,31	BR–17,22,26,31	BR–17,22,26,31	BR–17,22,26,31	BR–7	BR–17,22,26,31	BR–17,22,26,31	BR–17,22,26,31	BR–17,22,26,31	BR–17,22,26,31	BR–17,22,26,31	BR–17,22,26,31	BR–35
Low pedal or spongy pedal	1	2		3		4				5														
Brake drag					1	11	4	2	3	9	8	5	6		7	10								
Brake pull												5	1	2	3					4				
Hard pedal but brake inefficient	1	2	3							8		4		5		9				7		6		
Noise from brakes											8	1					4	2	5	3	6	7	9	10

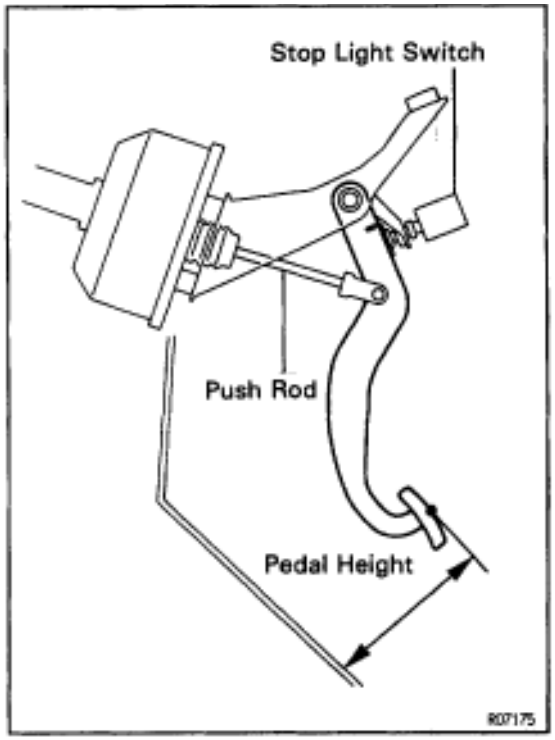

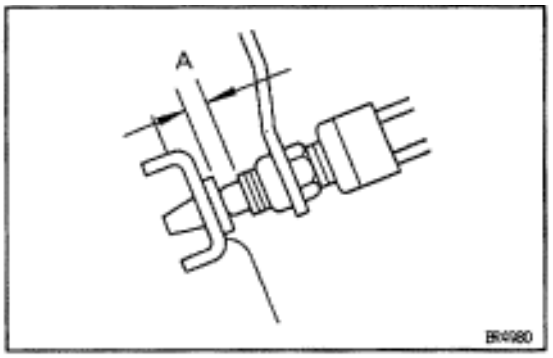

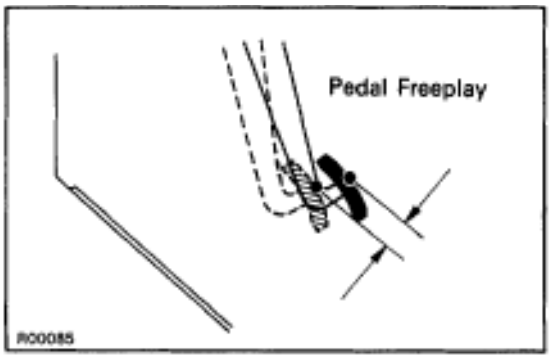

CHECK AND ADJUSTMENT

BRAKE PEDAL CHECK AND ADJUSTMENT

1. CHECK THAT PEDAL HEIGHT IS CORRECT

Pedal height from dash panel:

154.2–164.2 mm (6.07–6.46 in.)

If the pedal height is incorrect, adjust it.

2. IF NECESSARY, ADJUST PEDAL HEIGHT

(a) Remove the lower instrument panel and finish panel.

(b) Disconnect the connector from the stop light switch.

(c) Loosen the stop light switch lock nut and remove the stop light switch.

(d) Loosen the push rod lock nut.

(e) Adjust the pedal height by turning the pedal push rod.

(f) Tighten the push rod lock nut.

Torque: 25 N·m (260 kgf·cm, 19 ft·lbf)

(g) Install the stop light switch and turn it until it lightly contacts the pedal stopper.

(h) Turn the stop light switch back one turn.

(i) Check the clearance (A) between stop light switch and pedal.

Clearance:

0.5–2.4 mm (0.02–0.09 in.)

(j) Tighten the stop light switch lock nut.

(k) Connect the connector to the stop light switch.

(l) Check that the stop lights come on when the brake pedal is depressed, and go off when the brake pedal is released.

(m) After adjusting the pedal height, check the pedal free–play.

HINT: If clearance (A) between the stop light switch and the brake pedal stopper has been adjusted correctly, the pedal freeplay will meet the specifications.

(n) Install the lower instrument panel and finish panel.

3. CHECK PEDAL FREEPLAY

(a) Stop the engine and depress the brake pedal several times until there is no more vacuum left in the booster.

(b) Push in the pedal by hand until the beginning of the second point of resistance is felt, then measure the distance, as shown.

Pedal freeplay:

1–6 mm (0.04–0.24 in.)

If incorrect, check the stop light switch clearance. And if the clearance is OK, then troubleshoot the brake system.

HINT: The freeplay to the 1st point of resistance is due to the play between the clevis and pin. It is 1–3 mm (0.04–0.12 in.) on the pedal.

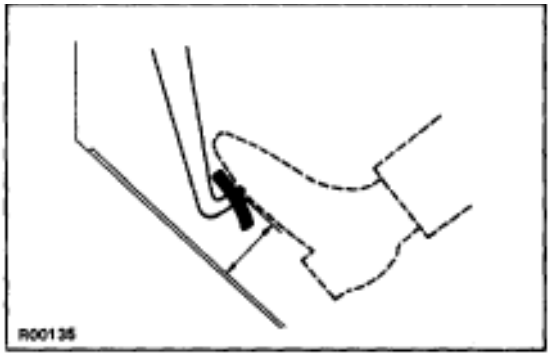

4. CHECK PEDAL RESERVE DISTANCE

Release the parking brake.

With the engine running, depress the pedal and measure the pedal reserve distance, as shown.

Pedal reserve distance at 490 N (50 kgf, 110.2 lbf):

w/o TRAC: More than 72 mm (2.83 in.)

w/ TRAC: More than 70 mm (2.76 in.)

If the reserve distance is incorrect, troubleshoot the brake system.

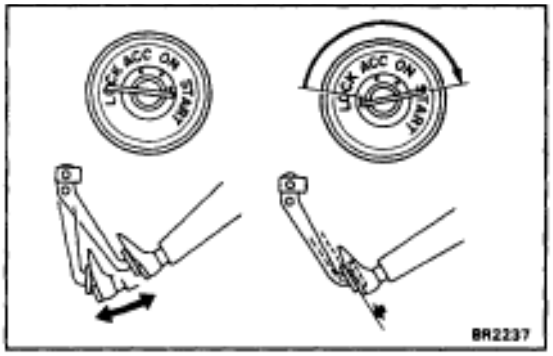

BRAKE BOOSTER OPERATIONAL TEST

1. OPERATING CHECK

(a) Depress the brake pedal several times with the engine off and check that there is no change in the pedal reserve distance.

(b) Depress the brake pedal and start the engine. If the pedal goes down slightly, operation is normal.

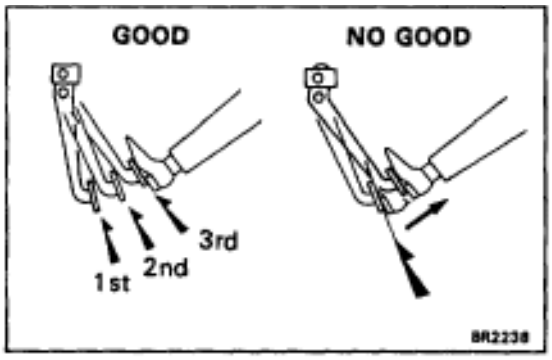

2. AIR TIGHTNESS CHECK

(a) Start the engine and stop it after 1 or 2 minutes. Depress the brake pedal several times slowly. If the pedal goes down farthest the 1st time, but gradually rises after the 2nd or 3rd time, the booster is air tight.

(b) Depress the brake pedal while the engine is running, and stop the engine with the pedal depressed. If there is no change in the pedal reserve travel after holding the pedal for 30 seconds, the booster is air tight.

BRAKE SYSTEM BLEEDING

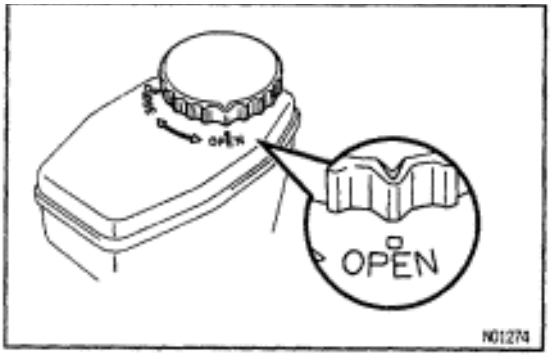

HINT: If any work is done on the brake system or if air in the brake lines is suspected, bleed the system of air.

NOTICE: Do not let brake fluid remain on painted surfaces. Wash it off immediately.

1. REMOVE RESERVOIR CAP

Turn the reservoir cap to the ”open” side and remove it.

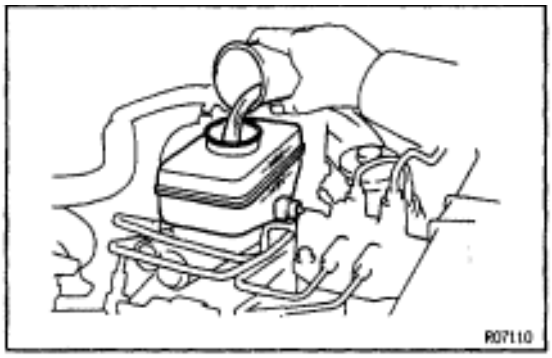

2. FILL RESERVOIR WITH BRAKE FLUID

Fluid:

SAE J1703 or FMVSS NO.116 DOT3

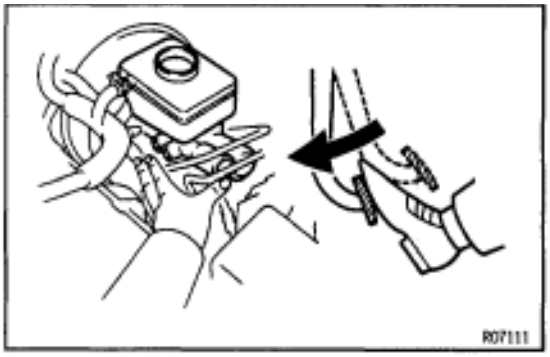

3. BLEED MASTER CYLINDER

HINT: If the master cylinder has been disassembled or if the reservoir becomes empty, bleed the air from the master cylinder.

(a) Disconnect the brake lines from the master cylinder.
(b) Slowly depress the brake pedal and hold it.

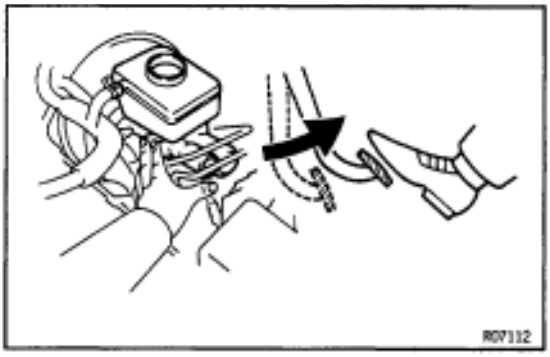

(c) Block off the outer holes with your fingers, and release the brake pedal.
(d) Repeat (b) and (c) 3 or 4 times.

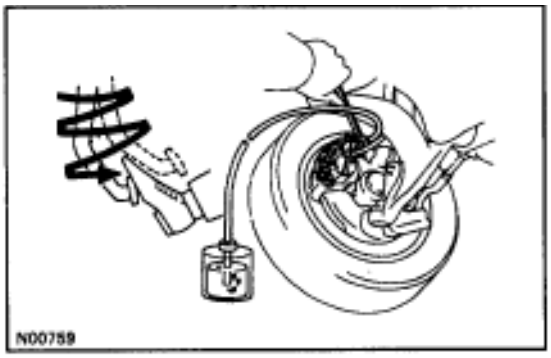

4. BLEED BRAKE LINE

(a) Connect the vinyl tube to the brake caliper.
(b) Depress the brake pedal several times, then loosen the bleeder plug with the pedal held down.
(c) At the point when fluid stops coming out, tighten the bleeder plug, then release the brake pedal.
(d) Repeat (b) and (c) until all the air in the fluid has been bled out.
(e) Repeat the above procedure to bleed the air out of the brake line for each wheel.

Torque: 11 N·m (110 kgf·cm, 8 ft·lbf)

5. CHECK FLUID LEVEL IN RESERVOIR

Check the fluid level and add fluid if necessary.

Fluid:

SAE J1703 or FMVSS NO.116 DOT3

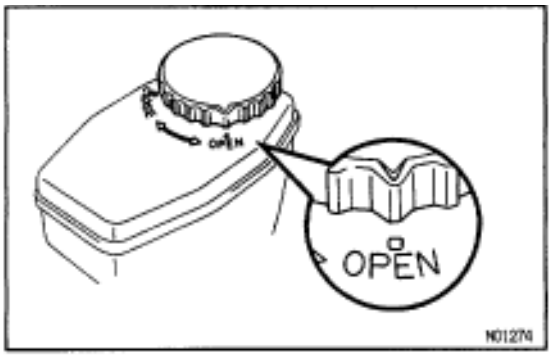

6. INSTALL RESERVOIR CAP

(a) Align the matchmark on the reservoir cap with the matchmark on the ”open” side of reservoir.
(b) Push down on the reservoir cap and turn it clockwise until it locks.
(c) Check that the matchmark on the reservoir cap is now aligned with the matchmark on the ”close” side of the reservoir.

TRAC CONTROL SYSTEM BLEEDING

HINT: When repairing the brake master cylinder or TRAC system, bleed the air out of the TRAC system.

1. INSPECT BATTERY POSITIVE VOLTAGE

Battery positive voltage:

10–14 V

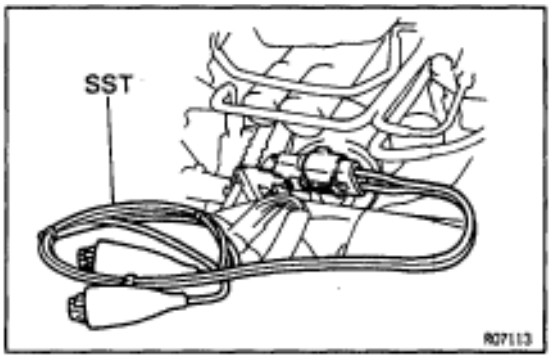

2. BLEED TRACTION CONTROL SYSTEM

(a) Disconnect the connector from the TRAC pump.

(b) Connect SST to the TRAC pump.
SST 09990–00330

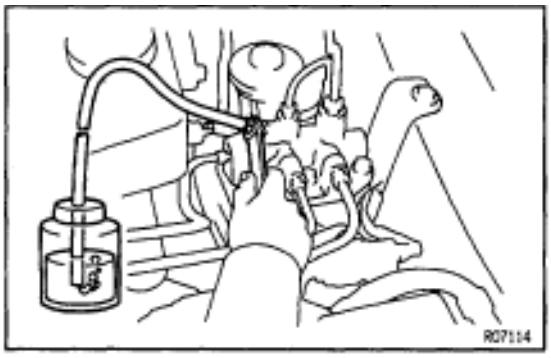

(c) Connect a vinyl tube to the bleeder plug of the TRAC actuator, then loosen the bleeder plug.

(d) Start the engine.

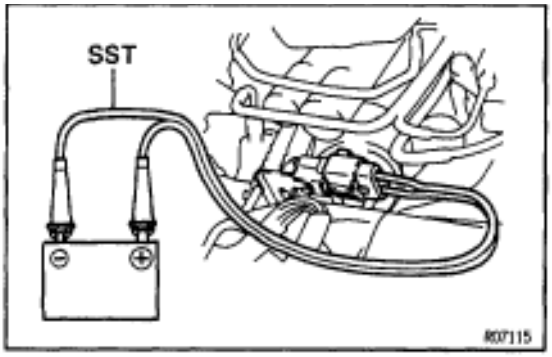

(e) Connect the SST to the battery. Then wait at least 60 seconds before tightening the bleeder plug with the TRAC pump still operating.

Torque: 8.3 N·m (85 kgf·cm, 74 in.·lbf)

(f) After tightening the bleeder plug, keep the TRAC pump operating for approximately 30 seconds.

(g) Install the cap.

3. CHECK FLUID LEVEL IN RESERVOIR

Fluid:

SAE J1703 or FMVSS NO. 116 DOT3

4. CLEAR DIAGNOSTIC TROUBLE CODES

(See page BR–127)

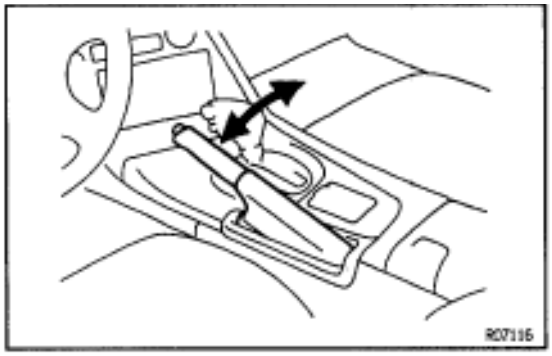

PARKING BRAKE CHECK AND ADJUSTMENT

1. CHECK PARKING BRAKE LEVER TRAVEL

Pull the parking brake lever all the way up, and count the number of clicks.

Parking brake lever travel at 196 N (20 kgf, 44.1 lbf):

5–8 clicks

If incorrect, adjust the parking brake.

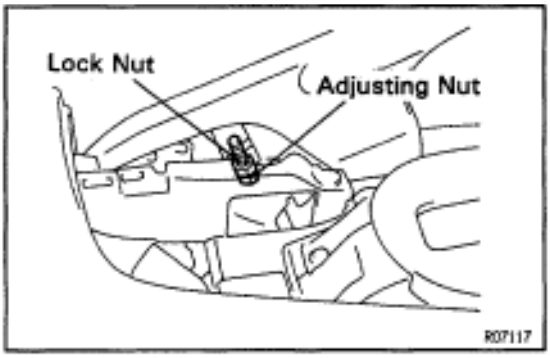

2. IF NECESSARY, ADJUST PARKING BRAKE

HINT: Before adjusting the parking brake, make sure that the rear brake shoe clearance has been adjusted.

For shoe clearance adjustment, see page BR–39.

(a) Remove the upper console panel.

(b) Remove the screw and parking brake hole cover.

(c) Using a socket driver and spanner wrench, remove the adjusting lock nut.

(d) Turn the adjusting nut until the lever travel is correct.

(e) Install the adjusting lock nut.

(f) Using a socket driver and spanner wrench, tighten the adjusting lock nut.

Torque: 5.4 N·m (55 kgf·cm, 48 in.·lbf)

(g) Install the parking brake hole cover with the screw.

(h) Install the upper console panel.

MASTER CYLINDER

MASTER CYLINDER REMOVAL

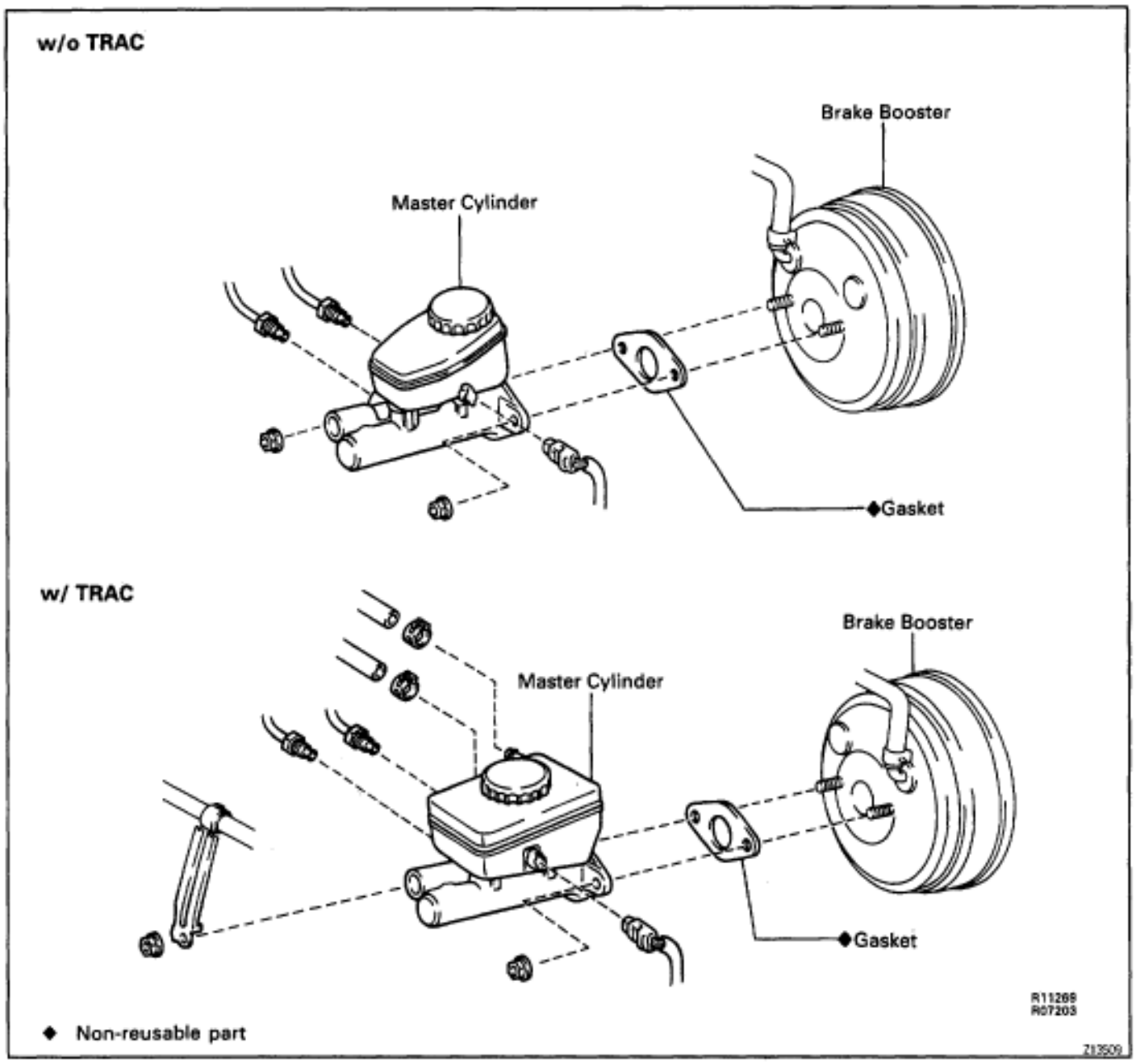

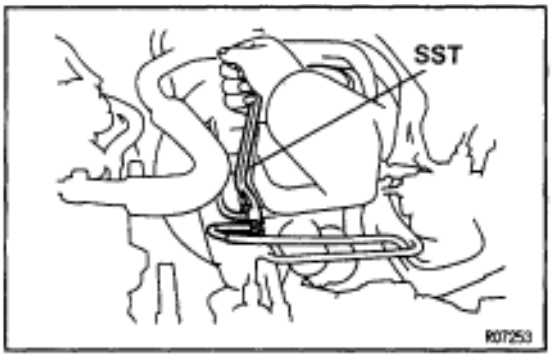

1. **DISCONNECT LEVEL WARNING SWITCH CONNECTOR**
2. **DRAW OUT FLUID WITH SYRINGE**
   NOTICE: Do not let brake fluid remain on a painted surface. Wash it off immediately.
3. **DISCONNECT BRAKE LINES**
   Using SST, disconnect the brake lines from the master cylinder.
   SST 09751–36011



4. REMOVE MASTER CYLINDER

(a) Remove the 2 nuts.

(b) Remove the master cylinder and gasket from the brake booster.

COMPONENTS

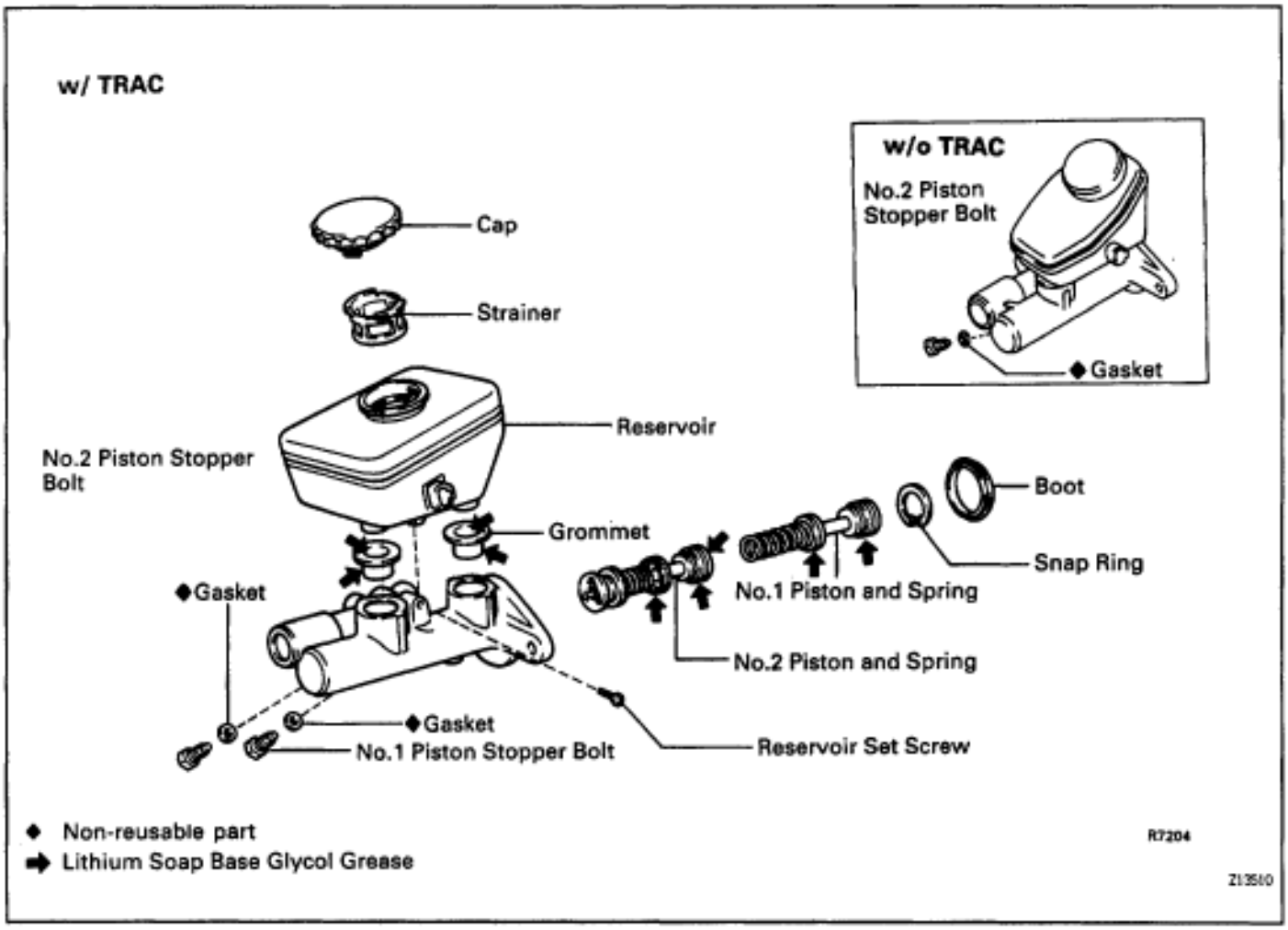

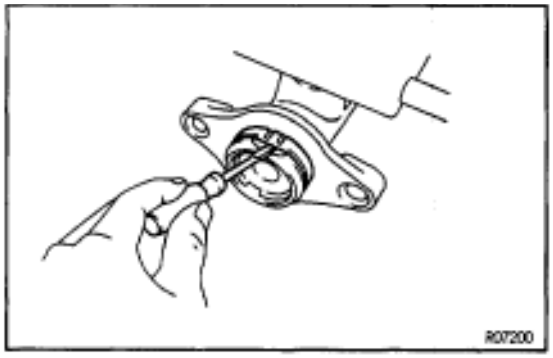

MASTER CYLINDER DISASSEMBLY

Assembly is in the reverse order of disassembly.

ASSEMBLY NOTICE: Apply lithium soap base glycol grease to the rubber parts indicated by the arrows (See page BR–12).

1. REMOVE MASTER CYLINDER BOOT

Using a screwdriver, remove the master cylinder boot.

ASSEMBLY NOTICE: Facing the UP mark on the master cylinder boot upwards, install the cylinder boot to the master cylinder.

2. REMOVE RESERVOIR CAP AND STRAINER

3. REMOVE RESERVOIR

Remove the set screw and pull out the reservoir.

Torque: 1.7 N·m (17.5 kgf·cm, 15.2 in.·lbf)

4. REMOVE 2 GROMMETS

5. PLACE CYLINDER IN VISE

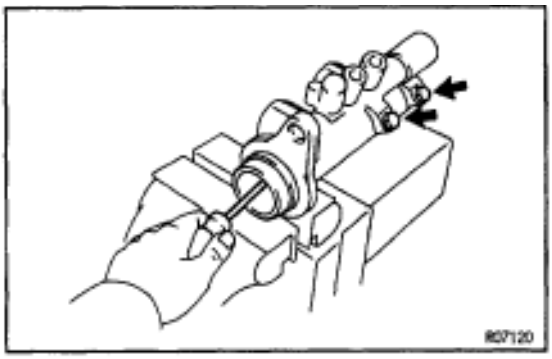

6. w/ TRAC:

REMOVE NO.1 PISTON STOPPER BOLT

Using a screwdriver, push the pistons in all the way and remove the No.1 piston stopper bolt and gasket.

HINT: Tape the screwdriver tip before use.

Torque: 10 N·m (100 kgf·cm, 7 ft·lbf)

7. REMOVE NO.2 PISTON STOPPER BOLT

Using a screwdriver, push the pistons in all the way and remove the No.2 piston stopper bolt and gasket.

Torque: 10 N·m (100 kgf·cm, 7 ft·lbf)

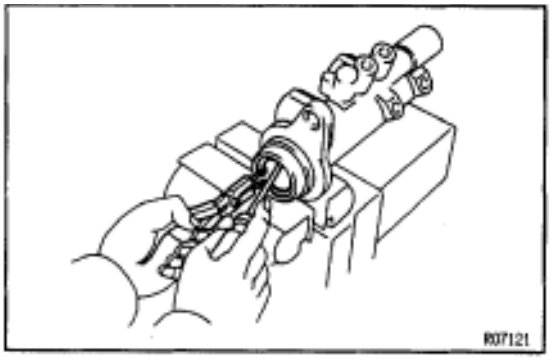

8. REMOVE 2 PISTONS

(a) Push in the piston with a screwdriver and remove the snap ring with snap ring pliers.

HINT: Tape the screwdriver tip before use.

(b) Remove the No.1 piston and spring by hand, pulling straight out, not at an angle.

NOTICE: If pulled out and install at an angle, there is a possibility that the cylinder bore could be damaged.

ASSEMBLY NOTICE: Be careful not to damage the rubber lips on the pistons.

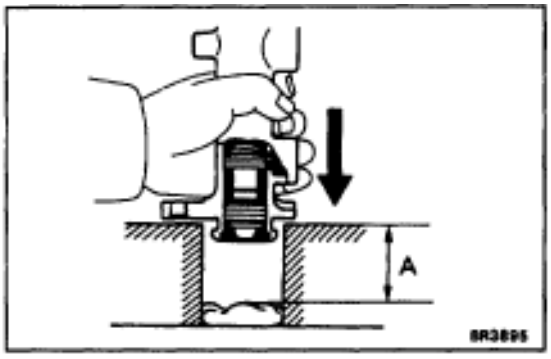

(c) Place a rag and 2 wooden blocks on the work table and lightly tap the cylinder flange against the block edges until the piston drops out of the cylinder.

DISASSEMBLY HINT: Make sure the distance (A) from the rag to the top of the blocks is at least 100 mm (3.94 in.)

MASTER CYLINDER COMPONENTS INSPECTION

HINT: Clean the disassembled parts with compressed air.

1. **INSPECT CYLINDER BORE FOR RUST OR SCORING**
2. **INSPECT CYLINDER FOR WEAR OR DAMAGE**
   If necessary, clean or replace the cylinder.

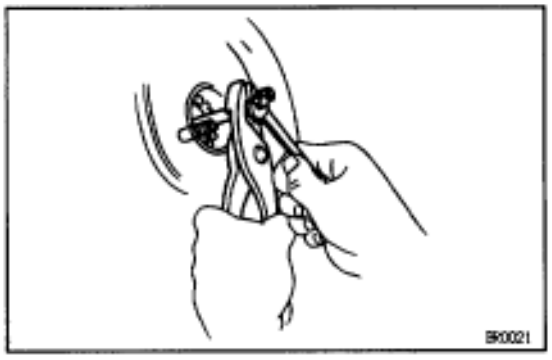

MASTER CYLINDER INSTALLATION

1. **ADJUST LENGTH OF BRAKE BOOSTER PUSH ROD BEFORE INSTALLING MASTER CYLINDER**
   (See page BR–16**)**
2. **INSTALL MASTER CYLINDER**
   Install the master cylinder and a new gasket on the brake booster with the 2 nuts.
   Torque: 13 N·m (130 kgf·cm, 9 ft·lbf)
3. **CONNECT BRAKE LINES**
   Using SST, connect the brake 2 lines to the master cylinder. Torque the union nuts.
   SST 09751–36011
   Torque: 15 N·m (155 kgf·cm, 11 ft·lbf)
4. **CONNECT LEVEL WARNING SWITCH CONNECTOR**
5. **FILL BRAKE RESERVOIR WITH BRAKE FLUID AND BLEED BRAKE SYSTEM**
   (See page BR–7)
6. **w/ TRAC:**
   BLEED TRAC SYSTEM
   (See page BR–9)
7. **CHECK FOR FLUID LEAKAGE**
8. **CHECK AND ADJUST BRAKE PEDAL**
   (See page BR–6)

BRAKE BOOSTER

BRAKE BOOSTER REMOVAL

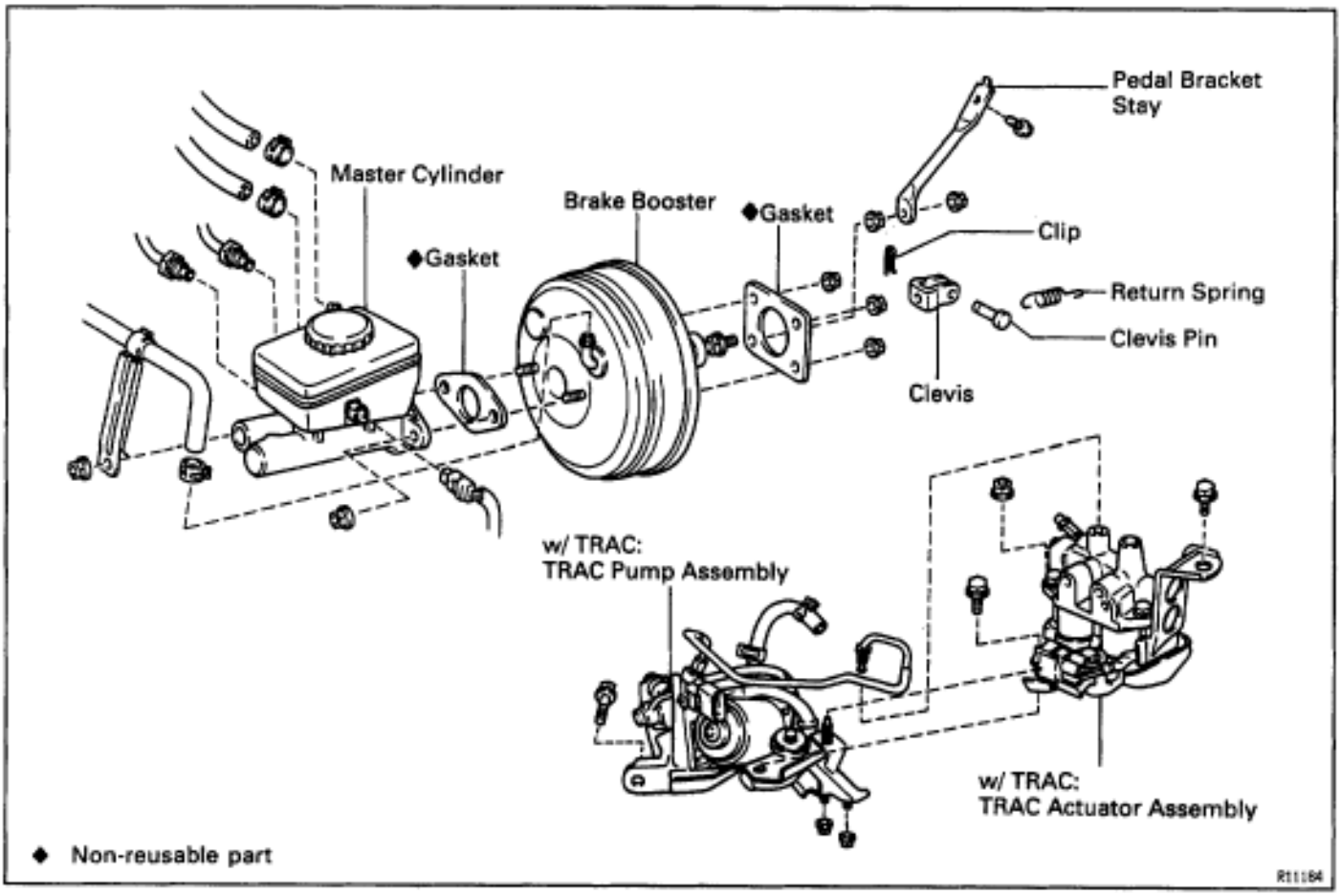

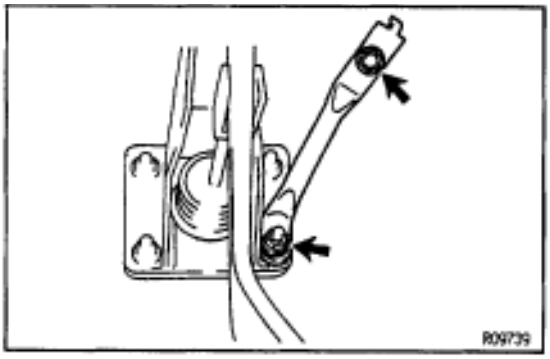

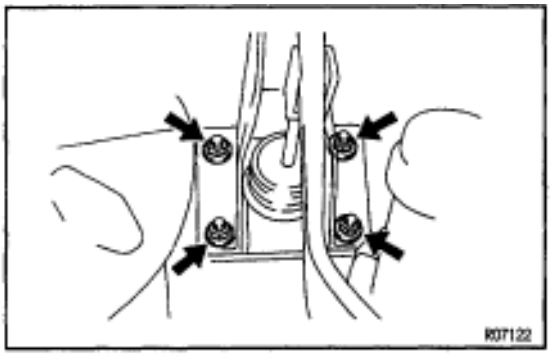

1. REMOVE THESE PARTS:

- Master cylinder (See page BR–11)
- Vacuum hose
- Clip, clevis pin and return spring

w/ TRAC:

- TRAC actuator assembly (See page BR–121)
- TRAC pump assembly (See page BR–118)

2. REMOVE PEDAL BRACKET STAY

(a) Remove the steering column assembly. (See page SR–14)
(b) Remove the bolt and nut.
(c) Remove the pedal bracket stay.

3. REMOVE BRAKE BOOSTER

(a) Remove the booster installation nuts.
(b) Remove the booster and gasket.

BRAKE BOOSTER INSTALLATION

1. INSTALL BRAKE BOOSTER

(a) Install the booster and a new gasket.

(b) Install and torque the booster installation nuts.

Torque: 12 N·m (125 kgf·cm, 9 ft·lbf)

(c) Insert the clevis pin into the clevis and brake pedal, and install the clip to the clevis pin.

(d) Install the pedal return spring.

2. ADJUST LENGTH OF BOOSTER PUSH ROD

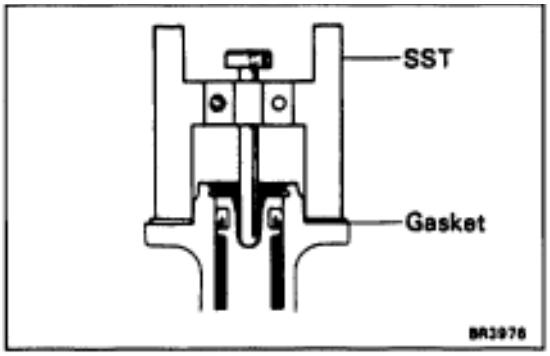

(a) Install the gasket on the master cylinder.

(b) Set the SST on the gasket, and lower the pin until its tip slightly touches the piston.

SST 09737–00010

(c) Turn the SST upside down, and set it on the booster.

SST 09737–00010

(d) Measure the clearance between the booster push rod and pin head (SST).

Clearance:

0 mm (0 in.)

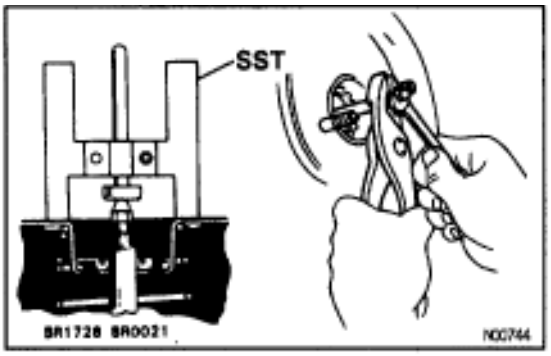

(e) Adjust the booster push rod length until the push rod lightly touches the pin head.

HINT: When adjusting the push rod, depress the brake pedal enough so that the push rod sticks out.

3. INSTALL PEDAL BRACKET STAY

(a) Install the pedal bracket stay.

(b) Install the bolt and nut.

(c) Install the steering column assembly. (See page SR–21)

4. INSTALL THESE PARTS:

- Vacuum hose
- Master cylinder (See page BR–14)

w/ TRAC:

- TRAC pump assembly (See page BR–118)
- TRAC actuator assembly (See page BR–121)

5. FILL BRAKE RESERVOIR WITH BRAKE FLUID AND BLEED BRAKE SYSTEM (See page BR–7)

6. w/TRAC:

BLEED TRAC SYSTEM (See page BR–9)

7. CHECK FOR FLUID LEAKAGE

8. CHECK AND ADJUST BRAKE PEDAL (See page BR –6)

9. DO OPERATIONAL CHECK (See page BR–7)

FRONT BRAKE (2JZ–GE)

COMPONENTS

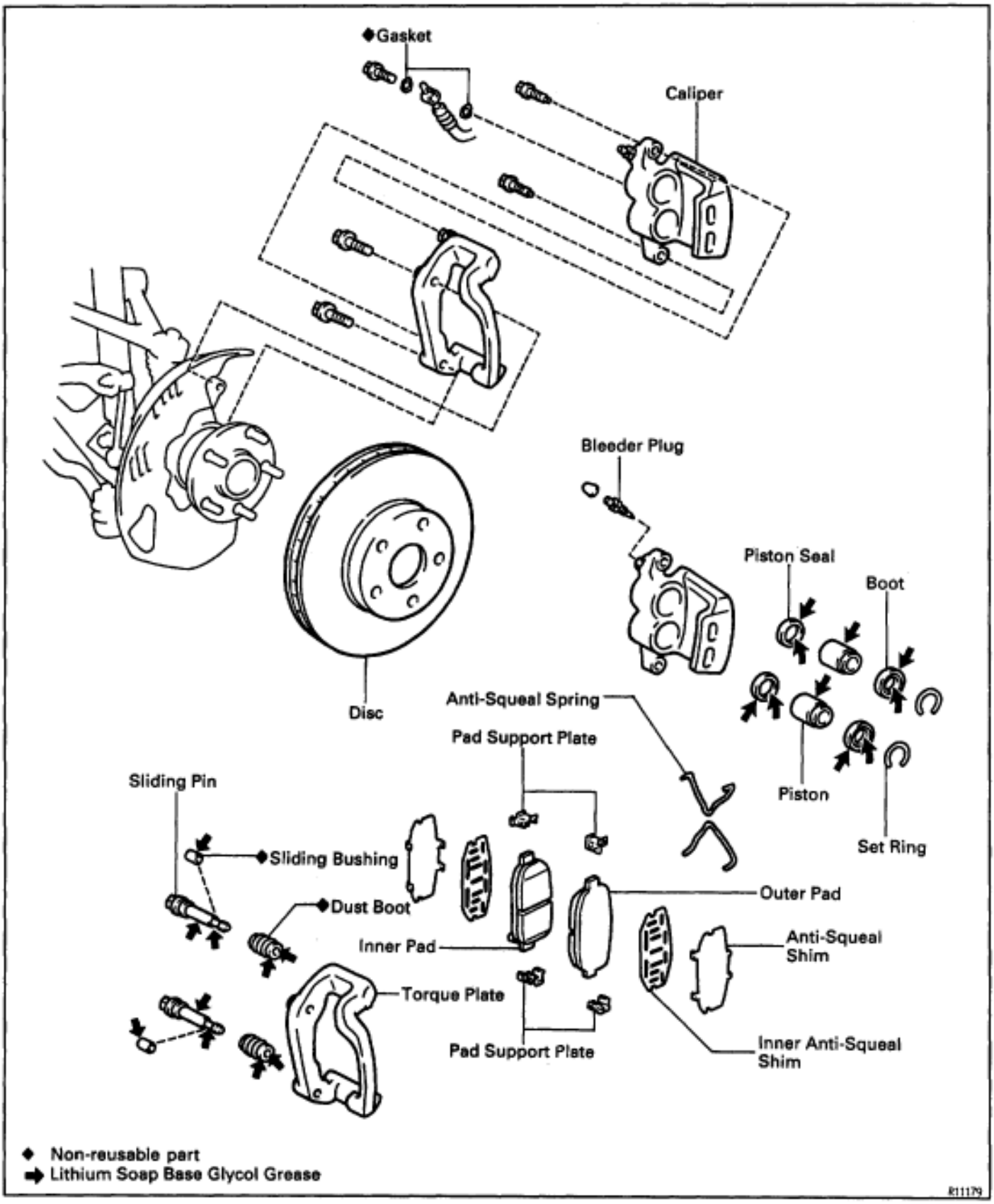

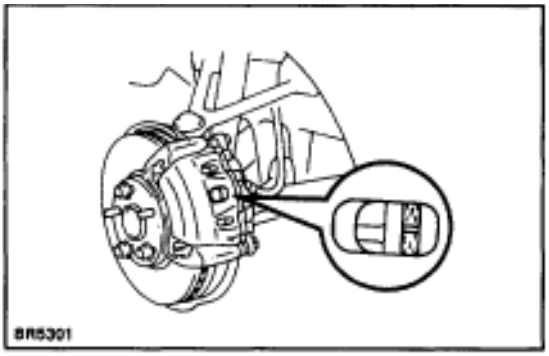

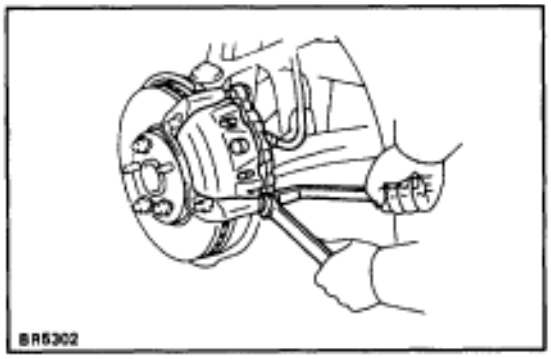

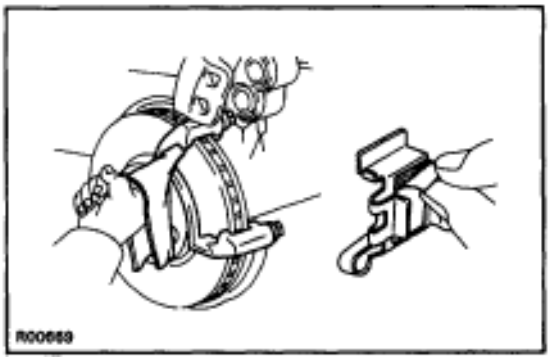

BRAKE PADS REPLACEMENT

1. REMOVE FRONT WHEEL

Remove the wheel and temporarily fasten the disc with the hub nuts.

2. INSPECT PAD LINING THICKNESS

Check the pad thickness through the caliper inspection hole and replace the pads if they are not within the specification.

Minimum thickness:

1.0 mm (0.039 in.)

3. LIFT UP CALIPER

(a) Hold the sliding pin on the bottom and loosen the installation bolt.

(b) Remove the installation bolt.

(c) Lift up the caliper and suspend it securely.

HINT: Do not disconnect the brake hose from the caliper.

4. REMOVE THESE PARTS:

(a) 2 anti–squeal springs

(b) 2 brake pads

(c) 4 anti–squeal shims

(d) 4 pad support plates

NOTICE: The anti–squeal springs can be used again provided that they have sufficient rebound, no deformation, cracks or wear, and have had all rust, dirt and foreign particles cleaned off.

5. CHECK DISC THICKNESS AND RUNOUT

(See page BR–21)

6. INSTALL UNDER SIDE PAD SUPPORT PLATES

7. INSTALL UPPER SIDE PAD SUPPORT PLATES

(a) Using cleaner, wipe off dust, water, oil, etc. from the pad support plate contact area of the torque plate.

(b) Remove the pad support cover sheets from new pad support plate.

(c) Install the new pad support plates.

8. INSTALL NEW PADS

NOTICE: When replacing worn pads, the anti–squeal shims must be replaced together with the pads.

(a) Apply disc brake grease to both sides of the inner anti–squeal shim.

(b) Install the 2 anti–squeal shims on each pad.

(d) Install 2 pads with the pad wear indicator plates facing downward.

NOTICE: There should be no oil or grease adhering to the friction surfaces of the pads or the disc.

(e) Install the 2 anti–squeal springs.

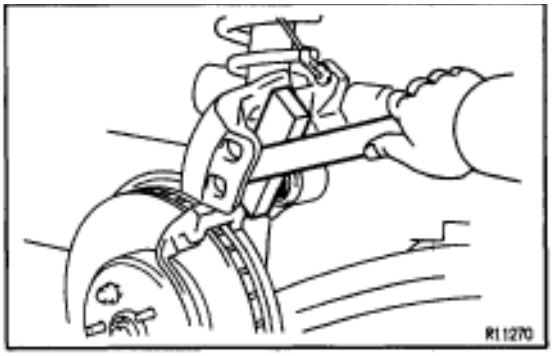

9. INSTALL CALIPER

(a) Draw out a small amount of brake fluid from the reservoir.

(b) Press in the piston with water pump pliers or similar implement.

HINT:

- Always change the pads on one wheel at a time as there is a possibility of the opposite piston flying out.
- If the piston is difficult to push in, loosen the bleeder plug and push in the piston while letting some brake fluid escape.

(c) Install the caliper.

(d) Hold the sliding pin and torque the installation bolt.

Torque: 34 N·m (350 kgf·cm, 25 ft·lbf)

10. INSTALL FRONT WHEEL

11. CHECK THAT FLUID LEVEL IS AT MAX LINE

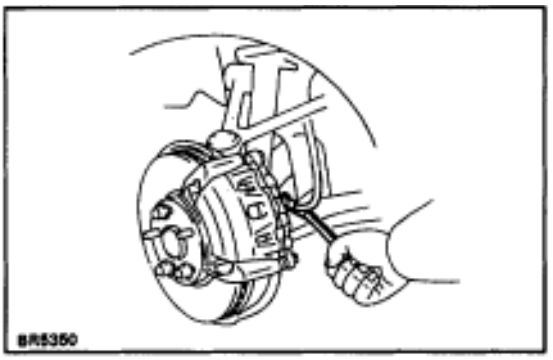

CALIPER REMOVAL

Installation is in the reverse order of removal.
AFTER INSTALLATION, FILL BRAKE RESERVOIR WITH BRAKE FLUID, BLEED BRAKE SYSTEM (See page BR–7) AND CHECK FOR LEAKS

1. DISCONNECT BRAKE HOSE

(a) Remove the union bolt and 2 gaskets from the brake caliper, then disconnect the brake hose from the brake caliper.

Torque: 29 N·m (300 kgf·cm, 21 ft·lbf)

INSTALLATION HINT: Install the flexible hose lock securely in the lock hole in the caliper.

(b) Use a container to catch the brake fluid as it drains out.

2. REMOVE CALIPER

(a) Hold the sliding pin and loosen the 2 installation bolts.

Torque: 34 N·m (350 kgf·cm, 25 ft·lbf)

(b) Remove the 2 installation bolts.

(c) Remove the caliper from the torque plate.

3. REMOVE THESE PARTS:

(a) 2 anti–squeal springs

(b) 2 brake pads with anti–squeal shims

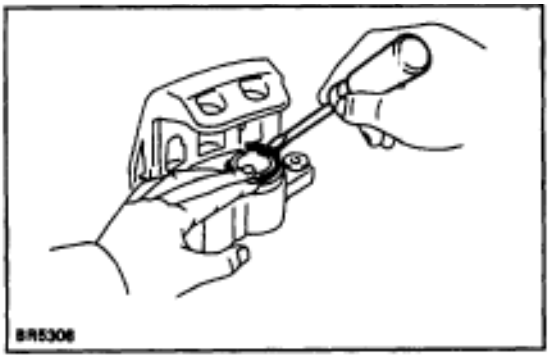

CALIPER DISASSEMBLY

Assembly is in the reverse order of disassembly.

ASSEMBLY NOTICE: Apply lithium soap base glycol grease to the parts indicated by the arrows (See page BR –17).

1. REMOVE CYLINDER BOOT SET RINGS AND BOOTS

Using a screwdriver, remove the cylinder boot set rings and boots from the cylinder.

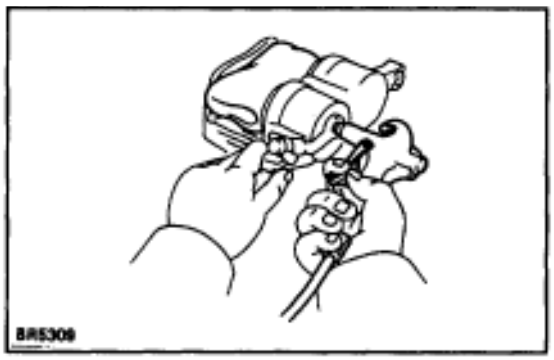

2. REMOVE PISTONS

(a) Place a piece of cloth or similar article between the piston and the caliper.

(b) Use compressed air to remove the pistons from the cylinder.

DISASSEMBLY CAUTION: Do not place your fingers in front of the piston when using compressed air.

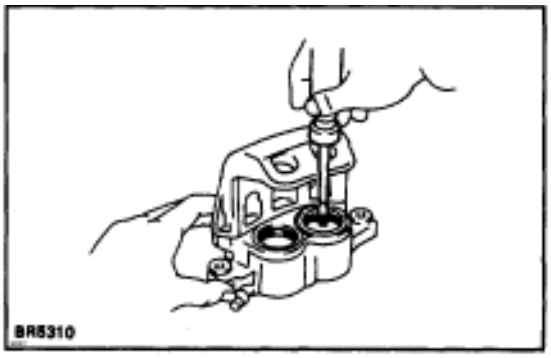

3. REMOVE PISTON SEALS

Using a screwdriver, remove the piston seals from the cylinder.

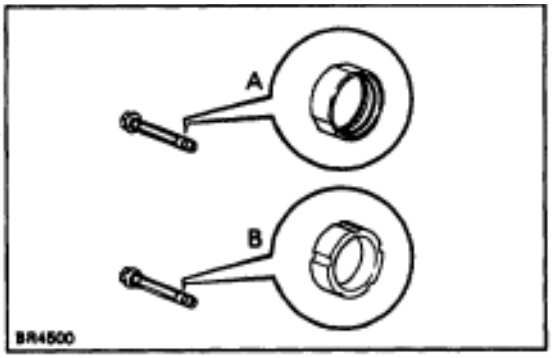

4. REMOVE SLIDING PINS AND DUST BOOTS

(a) Remove the 2 sliding pins from the torque plate.

ASSEMBLY NOTICE: Insert the sliding pin with sliding bushing A into the upper part, and insert the sliding pin with sliding bushing B into the lower part.

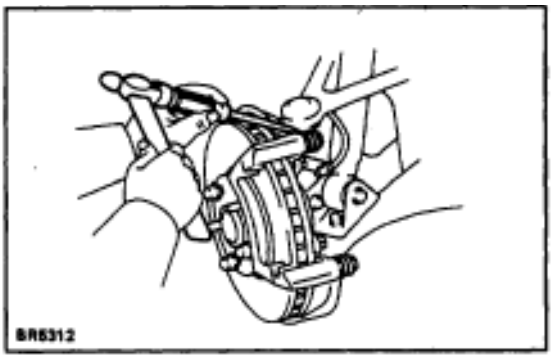

(b) Using a screwdriver and hammer, tap out the 2 dust boots.

ASSEMBLY HINT: Use a 19 mm socket and tap in 2 new dust boots into the torque plate.

ASSEMBLY NOTICE: Confirm that the metal plate portion of the dust boot fits snugly in the torque plate.

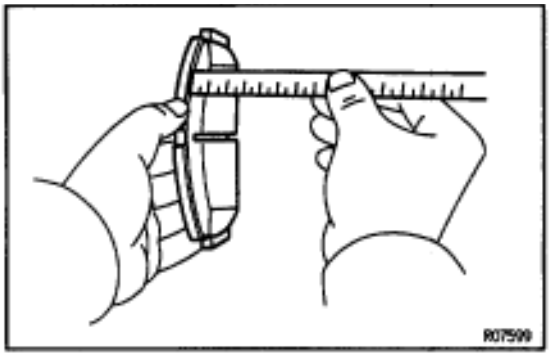

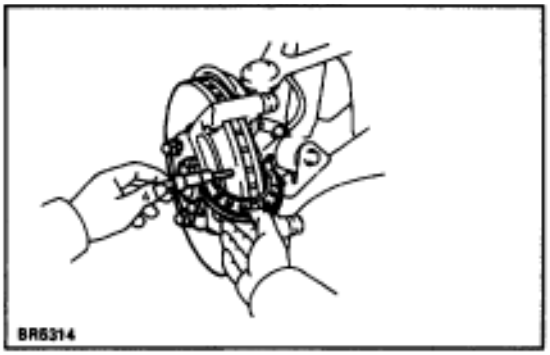

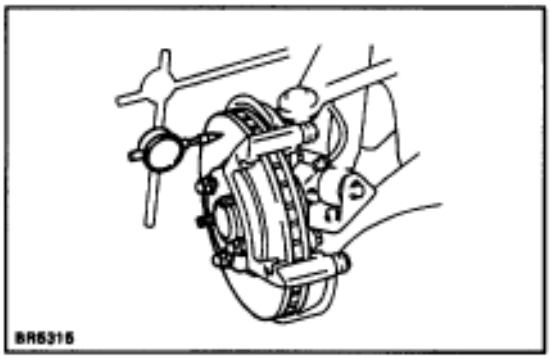

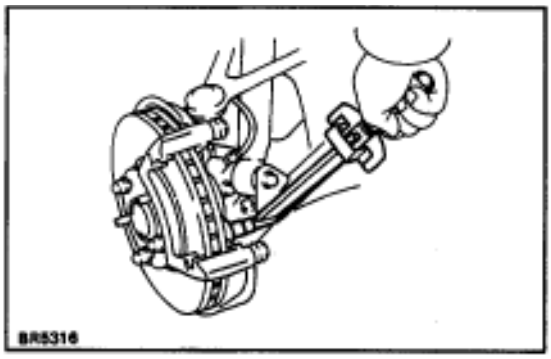

FRONT BRAKE COMPONENTS INSPECTION AND REPAIR

1. MEASURE PAD LINING THICKNESS

Using a ruler, measure the pad lining thickness.

Standard thickness:

11.0 mm (0.433 in.)

Minimum thickness:

1.0 mm (0.039 in.)

Replace the pad if the pad's thickness is at the minimum thickness or less, or if the pad has severe, uneven wear.

2. MEASURE DISC THICKNESS

Using a micrometer, measure the disc thickness.

Standard thickness:

32 mm (1.260 in.)

Minimum thickness:

30 mm (1.181 in.)

Replace the disc if the thickness of the disc is at the minimum thickness or less. Replace the disc or grind it on a lathe if it is scored or is worn unevenly.

3. MEASURE DISC RUNOUT

Using a dial indicator, measure the disc runout at a position 10 mm (0.39 in.) from the outside edge.

Maximum disc runout:

0.05 mm (0.0020 in.)

If the disc's runout is at the maximum value or greater, check the bearing play in the axial direction and check the axle hub runout (See page SA–16). If the bearing play and axle hub runout are not abnormal, adjust the disc runout.

4. IF NECESSARY, ADJUST DISC RUNOUT

(a) Remove the 2 bolts and torque plate.

(b) Remove the hub nuts and the disc. Reinstall the disc 1/5 of a turn round from its original position on the hub. Install and torque the hub nuts.

Torque: 103 N·m (1,050 kgf·cm, 76 ft·lbf)

Remeasure the disc runout. Make a note of the runout and disc's position on the hub.

(c) Repeat (b) until the disc has been installed on the 3 remaining hub positions.

(d) If the minimum runout recorded in (b) and (c) is less than 0.05 mm (0.0020 in.), install the disc in that position.

(e) If the minimum runout recorded in (b) and (c) is greater than 0.05 mm (0.0020 in.), replace the disc and repeat step 3.

(f) Install the torque plate and torque the 2 bolts.

Torque: 118 N·m (1,200 kgf·cm, 87 ft·lbf)

FRONT BRAKE (2JZ–GTE)

COMPONENTS

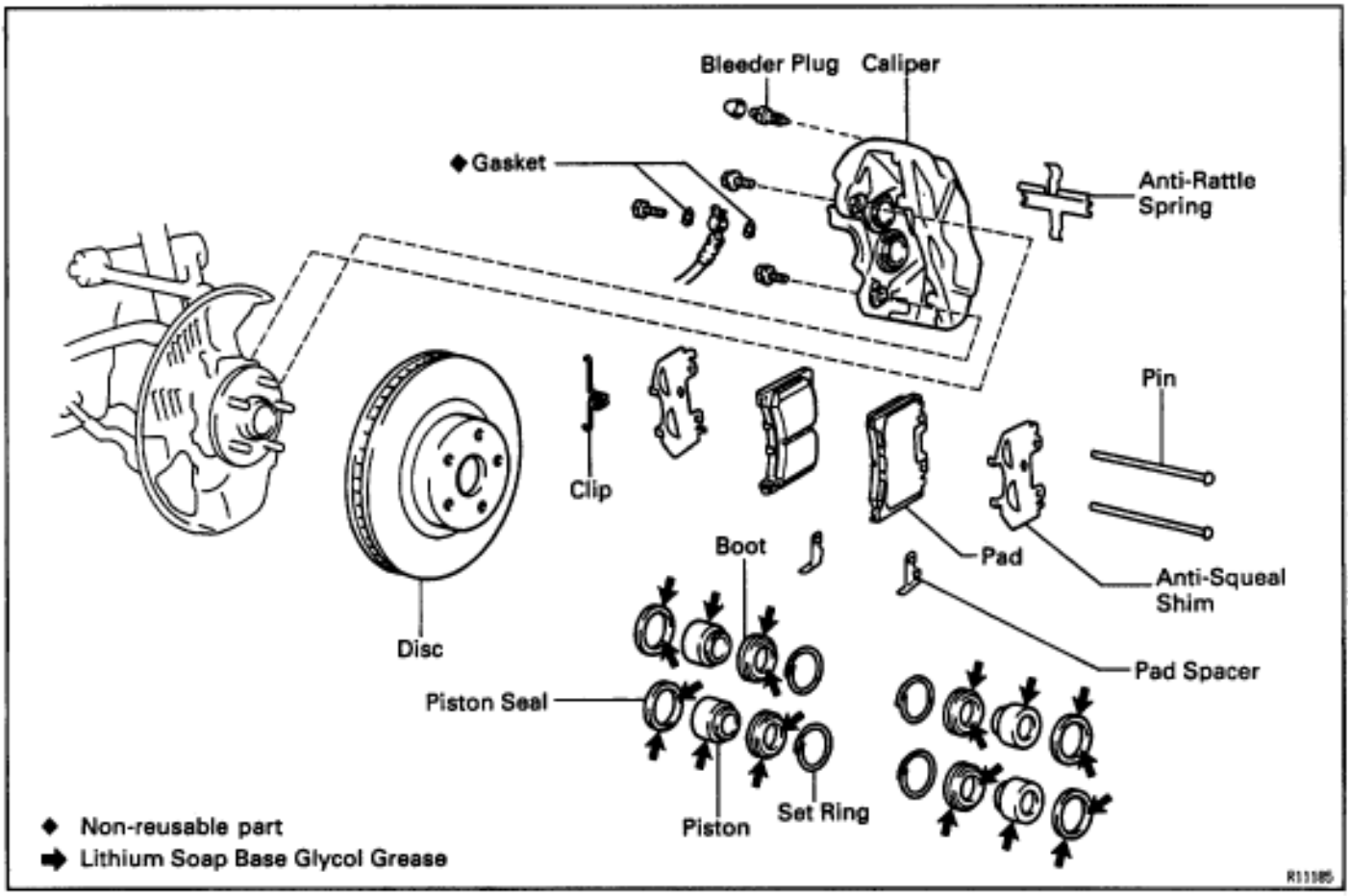

BRAKE PADS REPLACEMENT

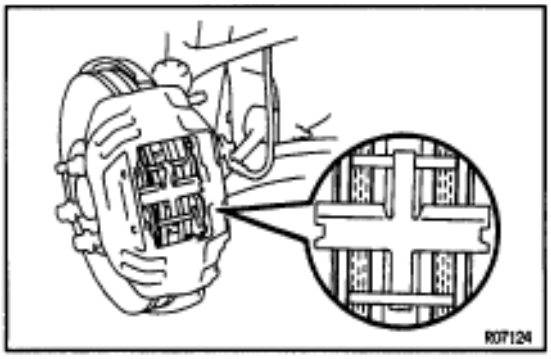

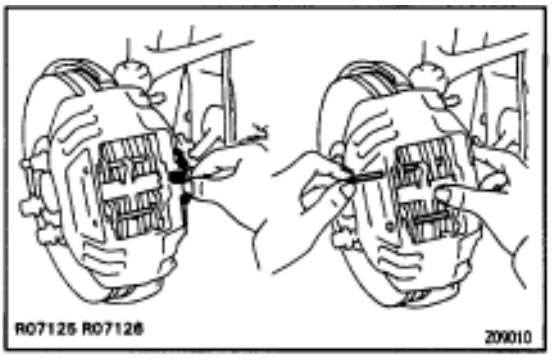

1. REMOVE FRONT WHEEL

Remove the wheel and temporarily fasten the disc with the hub nuts.

2. INSPECT PAD LINING THICKNESS

Check the pad thickness and replace pads if they are not within specification.

Minimum thickness: 1.0 mm (0.039 in.)

3. REMOVE THESE PARTS:

(a) Clip and 2 pins
(b) Anti–rattle spring
(c) 2 pads
(d) 2 pad spacers
(e) 2 anti–squeal shims

NOTICE: The anti–rattle spring, clip and pad spacers can be used again provided that they have sufficient rebound, no deformation, cracks or wear, and have had all rust, dirt and foreign particles cleaned off.

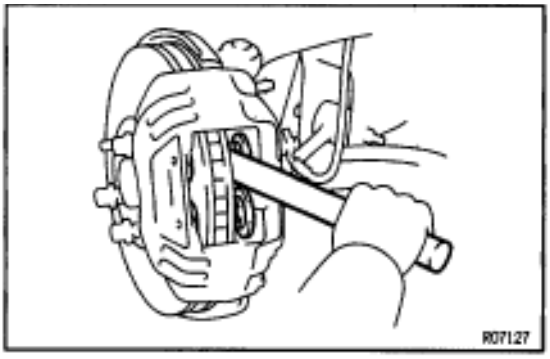

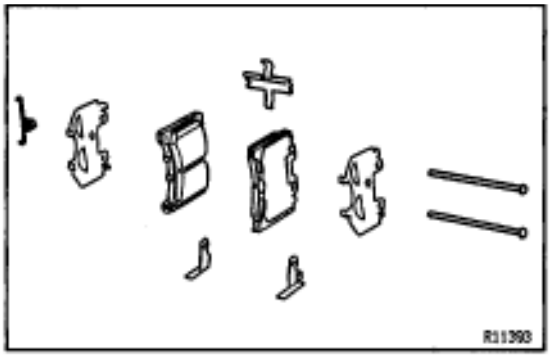

4. CHECK DISC THICKNESS AND RUNOUT
(See page BR–25)

5. INSTALL NEW PADS

NOTICE: When replacing worn pads, the anti–squeal shims must be replaced together with the pads.

(a) Draw out a small amount of brake fluid from the reservoir.

(b) Press in the pistons with a hammer handle or equivalent.
HINT:
- Always change the pads on one wheel at a time as there is a possibility of the opposite piston flying out.
- If the piston is difficult to push in, loosen the bleeder plug and push in the piston while letting some brake fluid escape.

(c) Install the anti–squeal shim on each pad.
HINT:
- Place the pad wear indicator facing downward.
- Apply disc brake grease to inner side of the antisqueal.
- Make sure that the arrow on the shims points upward.

(d) Install a pad spacer on the lower side of the each pad.

(e) Install the 2 pads.

NOTICE: Do not allow oil or grease to get on the rubbing face.

6. INSTALL ANTI–RATTLE SPRING AND 2 PINS

7. INSTALL CLIP

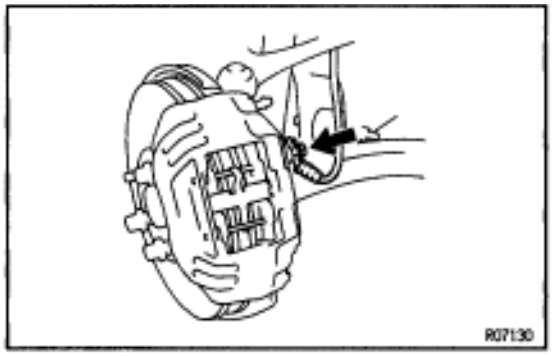

CALIPER REMOVAL

Installation is in the reverse order of removal.
AFTER INSTALLATION, FILL BRAKE RESERVOIR WITH BRAKE FLUID, BLEED BRAKE SYSTEM (See page BR–7) AND CHECK FOR LEAKS

1. REMOVE FRONT WHEEL

2. DISCONNECT BRAKE HOSE

(a) Remove the union bolt and 2 gaskets from the caliper, then disconnect the brake hose from the caliper.
Torque: 30 N·m (310 kgf·cm, 22 ft·lbf)
INSTALLATION HINT: Install the flexible hose lock securely in the lock hole in the caliper.

(b) Use a container to catch the brake fluid as it drains out.



3. REMOVE CALIPER

Remove the 2 mounting bolts and caliper.

Torque: 118 N·m (1,200 kgf·cm, 87 ft·lbf)

4. REMOVE THESE PARTS:

(a) Clip
(b) 2 pins
(c) Anti–rattle spring
(d) 2 pads
(e) 2 pad spacers
(f) 2 anti–squeal shims

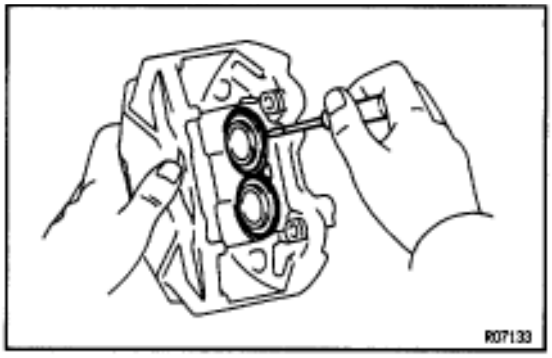

CALIPER DISASSEMBLY

Assembly is in the reverse order of disassembly.

ASSEMBLY NOTICE: Apply lithium soap base glycol grease to the parts indicated by the arrows (See page BR –22).

1. REMOVE CYLINDER BOOT SET RINGS AND BOOTS

Using a screwdriver, remove the 4 cylinder boot set rings and 4 boots.

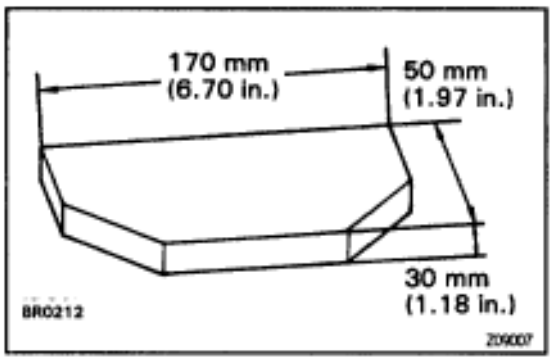

2. REMOVE PISTONS FROM CYLINDER

(a) Prepare a wooden plate to hold the pistons.

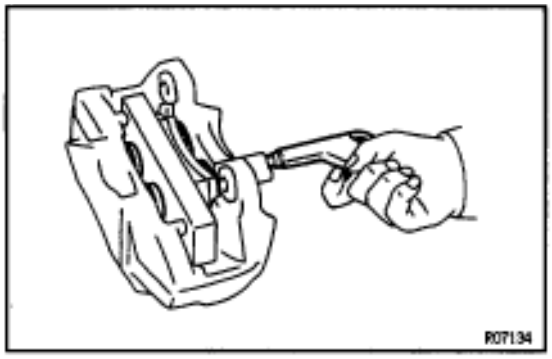

(b) Place the plate between the pistons and insert a pad on one side.
(c) Use compressed air to remove the pistons alternately from the cylinder.

DISASSEMBLY CAUTION: Do not place your fingers in front of the pistons when using compressed air.

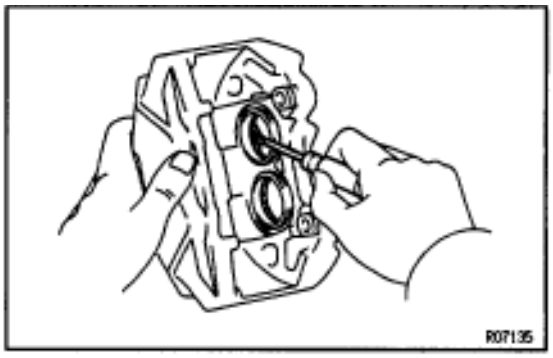

3. REMOVE PISTON SEALS

Using a screwdriver, remove the 4 piston seals from the cylinder.

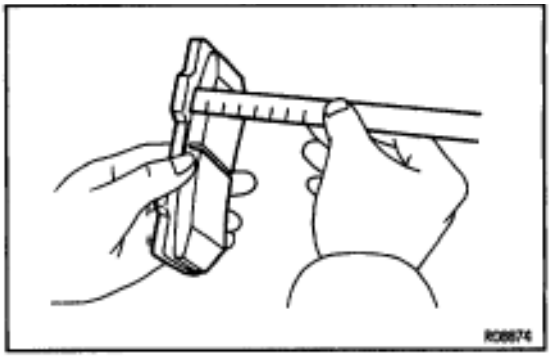

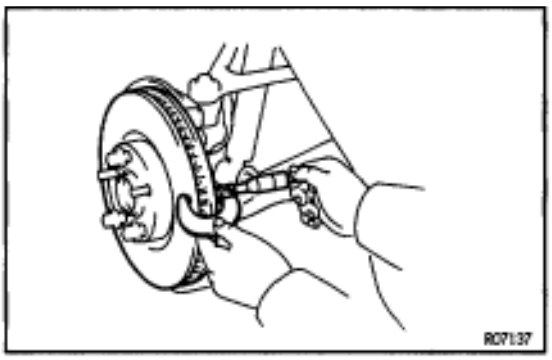

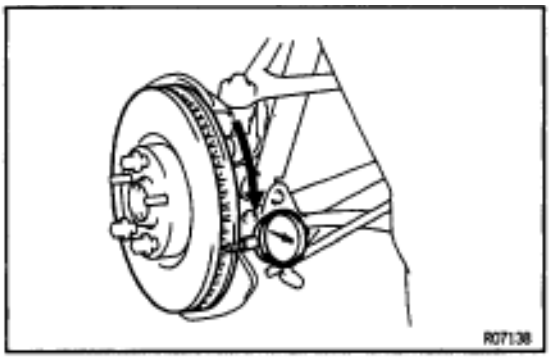



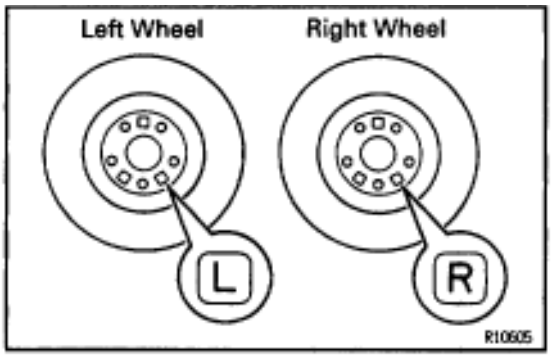

FRONT BRAKE COMPONENTS INSPECTION AND REPAIR

1. MEASURE PAD LINING THICKNESS

Using a ruler, measure the pad lining thickness.

Standard thickness:

12.0 mm (0.472 in.)

Minimum thickness:

1.0 mm (0.039 in.)

Replace the pads if the thickness is less than the minimum (the 1.0 mm slit is no longer visible) or if it shows signs of uneven wear.

2. MEASURE DISC THICKNESS

Using a micrometer, measure the disc thickness.

Standard thickness:

30.0 mm (1.181 in.)

Minimum thickness:

28.0 mm (1.102 in.)

Replace the disc if the thickness of the disc is at the minimum thickness or less. Replace the disc or grind it on a lathe if it is badly scored or worn unevenly.

3. MEASURE DISC RUNOUT

Using a dial indicator, measure disc runout 10 mm (0.39 in.) from the outer edge of the disc.

Maximum disc runout:

0.05 mm (0.0020 in.)

If the disc's runout is at the maximum value or greater, check the bearing play in the axial direction and check the axle hub runout (See page SA–16). If the bearing play and axle hub runout are not abnormal, adjust the disc runout.

4. IF NECESSARY, ADJUST DISC RUNOUT

(a) Remove the hub nuts and the disc. Reinstall the disc 1/5 of a turn round from its original position on the hub. Install and torque the hub nuts.

Torque: 103 N·m (1,050 kgf·cm, 76 ft·lbf)

Remeasure the disc runout. Make a note of the runout and the disc's position on the hub.

(b) Repeat (a) until the disc has been installed on the 3 remaining hub positions.

(c) If the minimum runout recorded in (a) and (b) is less than 0.05 mm (0.0020 in.), install the disc in that position.

(d) If the minimum runout recorded in (a) and (b) is greater than 0.05 mm (0.0020 in.), replace the disc and repeat step 3.

HINT: Install a disc marked with "R" on the right wheel, and a disc marked with "L" on the left wheel.

REAR BRAKE (2JZ–GE)

COMPONENTS

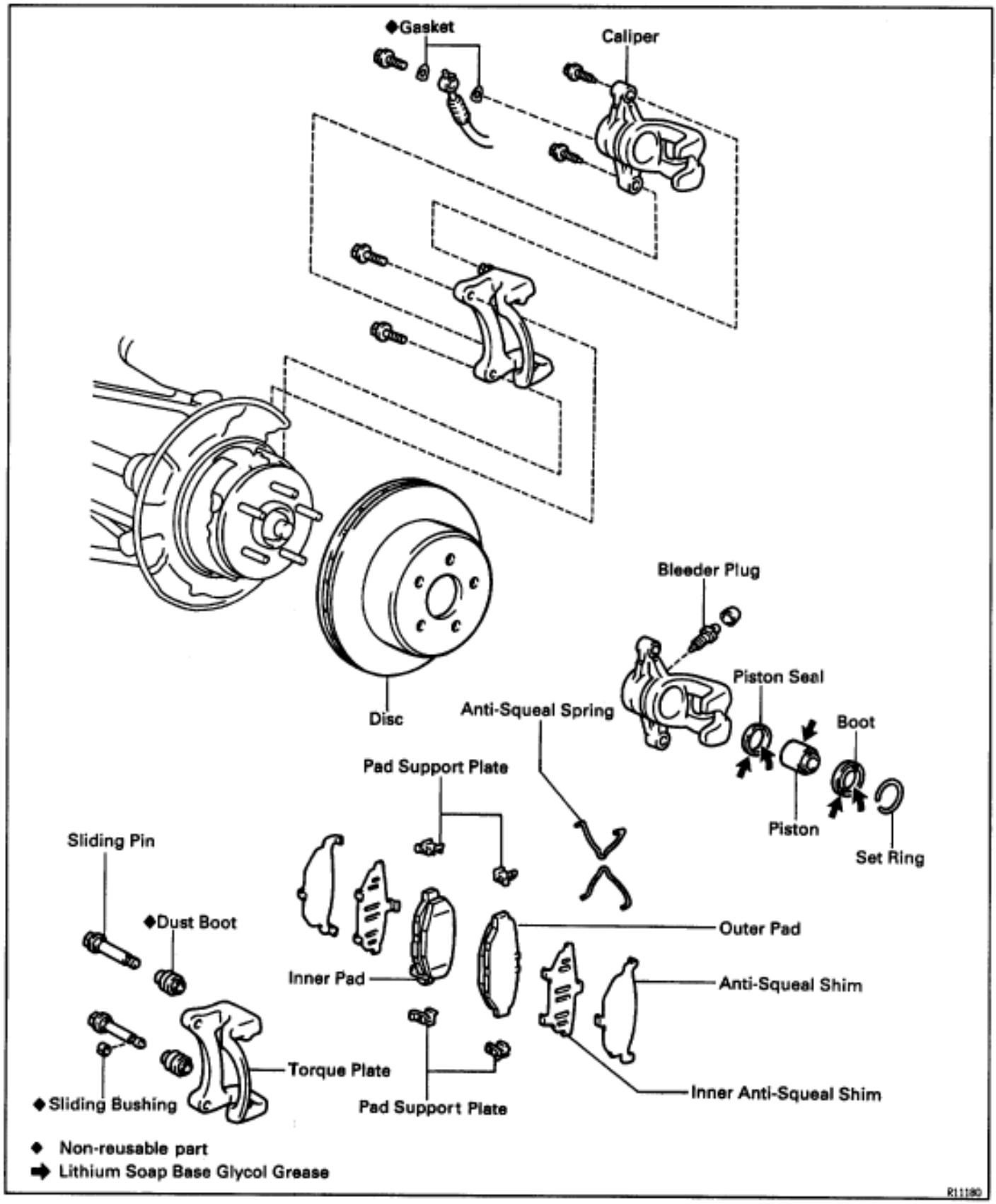

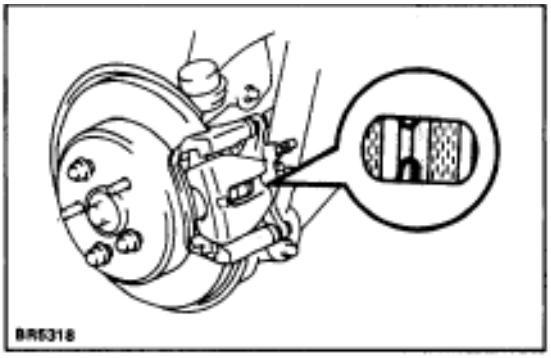

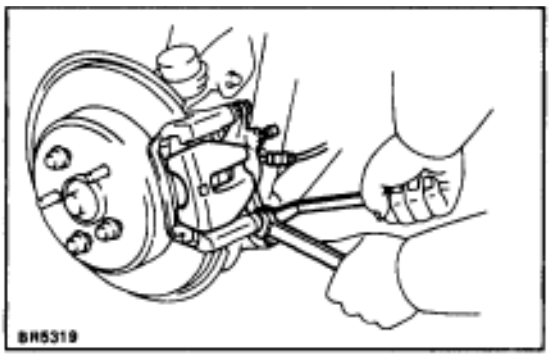

BRAKE PADS REPLACEMENT

1. REMOVE REAR WHEEL

Remove the wheel and temporarily fasten the disc with the hub nuts.

2. INSPECT PAD LINING THICKNESS

Check the pad thickness through the caliper inspection hole and replace pads if the thickness is not within the specification.

Minimum thickness:

1.0 mm (0.039 in.)

3. LIFT UP CALIPER

(a) Hold the sliding pin on the bottom and loosen the installation bolt.

(b) Remove the installation bolt.

(c) Lift up the caliper and suspend it securely.

HINT: Do not disconnect the brake hose from the caliper.

4. REMOVE THESE PARTS:

(a) 2 anti–squeal springs

(b) 2 brake pads

(c) 4 anti–squeal shims

(d) 4 pad support plates

NOTICE: The anti–squeal springs and support plates can be used again provided that they have sufficient rebound, no deformation, cracks or wear, and have had all rust, dirt and foreign particles cleaned off.

5. CHECK DISC THICKNESS AND RUNOUT

(See page BR–30)

6. INSTALL 4 PAD SUPPORT PLATES

7. INSTALL NEW PADS

NOTICE: When replacing worn pads, the anti–squeal shims must be replaced together with the pads.

(a) Apply disc brake grease to both sides of the inner anti–squeal shim.

(b) Install the 2 anti–squeal shims on each pad.

(c) Install 2 pads with the pad wear indicator plates facing downward.

NOTICE: There should be no oil or grease adhering to the friction surfaces of the pads or the disc.

(d) Install the 2 anti–squeal springs.

8. INSTALL CALIPER

(a) Draw out a small amount of brake fluid from the reservoir.

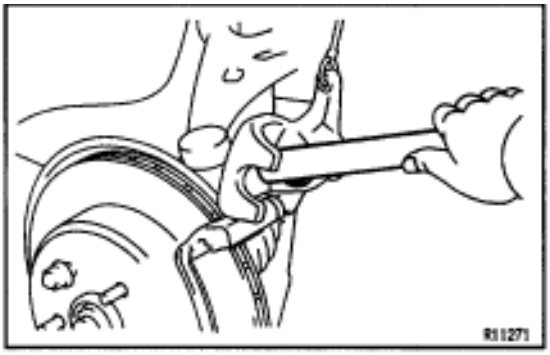

(b) Press in the piston with water pump pliers or similar implement.
HINT:
- Always change the pads on one wheel at a time as there is a possibility of the opposite piston flying out.
- If the piston is difficult to push in, loosen the bleeder plug and push in the piston while letting some brake fluid escape.

(c) Install the brake caliper.
(d) Hold the sliding pin and torque the installation bolt.
Torque: 34 N·m (350 kgf·cm, 25 ft·lbf)

9. INSTALL REAR WHEEL

10. CHECK THAT FLUID LEVEL IS AT MAX LINE

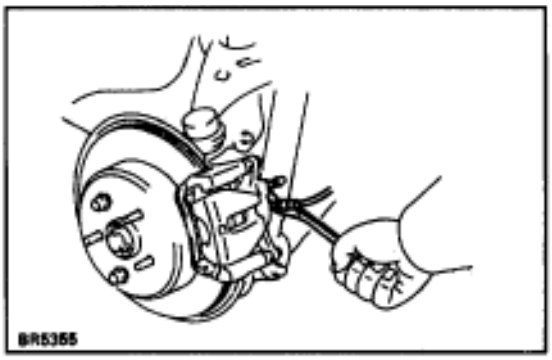

CALIPER REMOVAL

Installation is in the reverse order of removal.
AFTER INSTALLATION, FILL BRAKE RESERVOIR WITH BRAKE FLUID, BLEED BRAKE SYSTEM (See page BR–7).

1. DISCONNECT BRAKE HOSE

(a) Remove the union bolt and 2 gaskets from the brake caliper, then disconnect the brake hose from the brake caliper.
Torque: 30 N·m (310 kgf·cm, 22 ft·lbf)
INSTALLATION HINT: Install the flexible hose lock securely in the lock hole in the caliper.
(b) Use a container to catch the brake fluid as it drains out.

2. REMOVE CALIPER

(a) Hold the sliding pin and loosen the 2 installation bolts.
Torque: 34 N·m (350 kgf·cm, 25 ft·lbf)
(b) Remove the 2 installation bolts.
(c) Remove the caliper from the torque plate.

3. REMOVE THESE PARTS:

(a) 2 anti–squeal springs
(b) 2 brake pads with anti–squeal shims

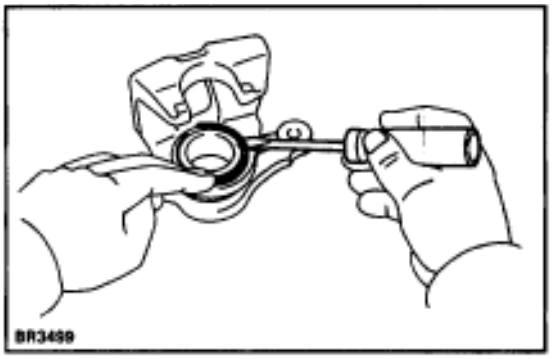

CALIPER DISASSEMBLY

Assembly is in the reverse order of disassembly.

ASSEMBLY NOTICE: Apply lithium soap base glycol grease to the parts indicated by the arrows (See page BR –26).

1. REMOVE CYLINDER BOOT SET RING AND BOOT

Using a screwdriver, remove the cylinder boot set ring and boot from the cylinder.

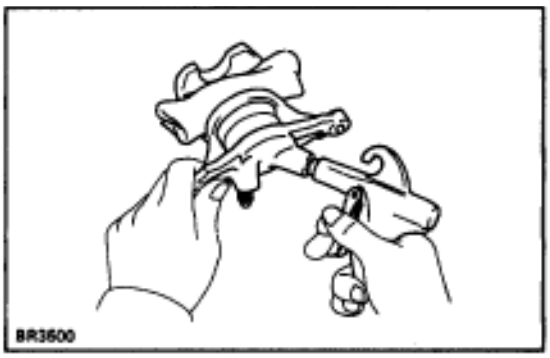

2. REMOVE PISTON

(a) Place a piece of cloth or similar article between the piston and the caliper.

(b) Use compressed air to remove the piston from the cylinder.

DISASSEMBLY CAUTION: Do not place your fingers in front of the piston when using compressed air.

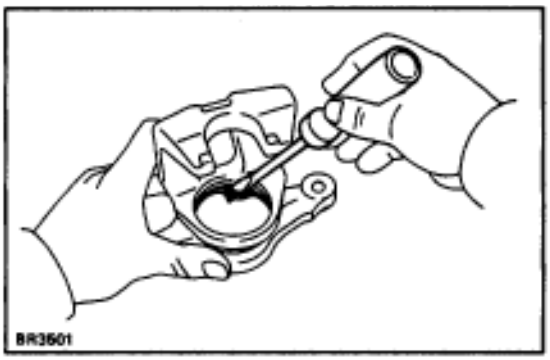

3. REMOVE PISTON SEAL

Using a screwdriver, remove the piston seal from the cylinder.

4. REMOVE SLIDING PINS AND DUST BOOTS

(a) Remove the 2 sliding pins from the torque plate.

ASSEMBLY NOTICE: Insert the sliding pin with the sliding bushing into the bottom side.

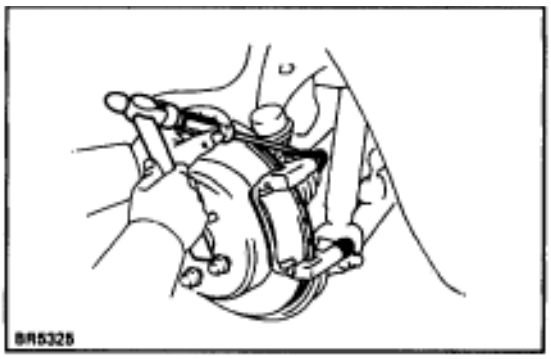

(b) Using a screwdriver and hammer, tap out the 2 dust boots.

ASSEMBLY HINT: Use a 19 mm socket and tap in 2 new dust boots into the torque plate.

ASSEMBLY NOTICE: Confirm that the metal plate portion of the dust boot fits snugly in the torque plate.

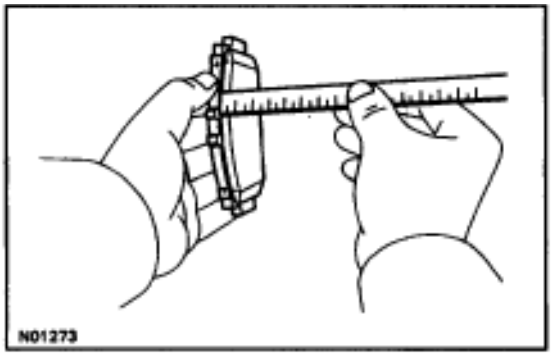

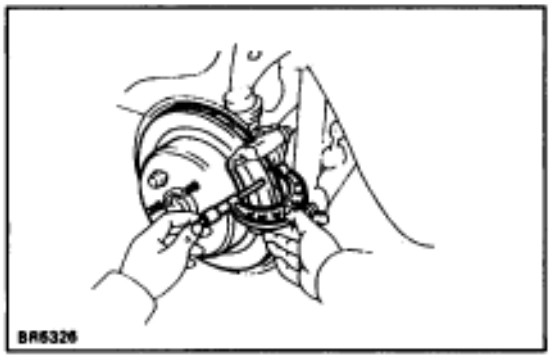

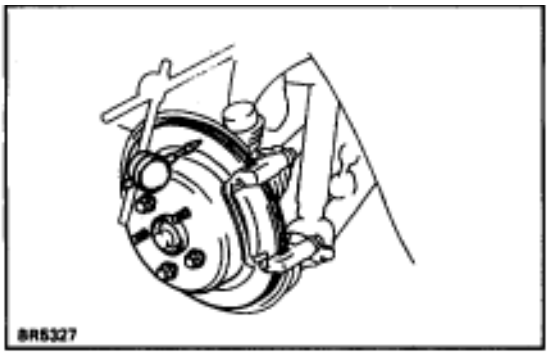

REAR BRAKE COMPONENTS INSPECTION AND REPAIR

1. MEASURE PAD LINING THICKNESS

Using a ruler, measure the pad lining thickness.

Standard thickness:

10.0 mm (0.394 in.)

Minimum thickness:

1.0 mm (0.039 in.)

Replace the pad if the pad's thickness is at the minimum thickness or less, or if the pad has severe, uneven wear.

2. MEASURE DISC THICKNESS

Using a micrometer, measure the disc thickness.

Standard thickness:

16.0 mm (0.630 in.)

Minimum thickness:

15.0 mm (0.591 in.)

Replace the disc if the thickness of the disc is at the minimum thickness or less. Replace the disc or grind it on a lathe if it is badly scored or worn unevenly.

3. MEASURE DISC RUNOUT

Using a dial indicator, measure disc runout 10 mm (0.39 in.) from the outer edge of the disc.

Maximum disc runout:

0.05 mm (0.0020 in.)

If the disc's runout is at the maximum value or greater, check the bearing play in the axial direction and check the axle hub runout (See page SA–38). If the bearing play and axle hub runout are not abnormal, adjust the disc runout.

4. IF NECESSARY, ADJUST DISC RUNOUT

(a) Remove the 2 bolt and torque plate.

(b) Remove the hub nuts and the disc. Reinstall the disc 1/5 of a turn round from its original position on the hub. Install and torque the hub nuts.

Torque: 103 N·m (1,050 kgf·cm, 76 ft·lbf)

Remeasure the disc runout. Make a note of the runout and the disc's position on the hub.

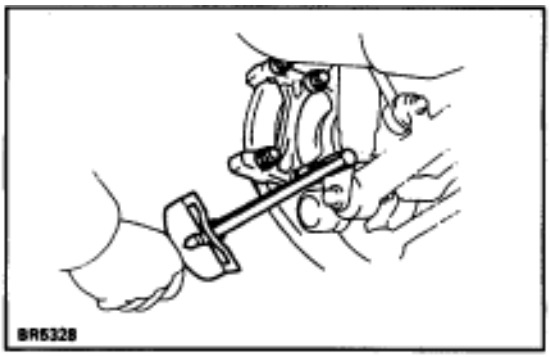

(c) Repeat (b) until the disc has been installed on the 3 remaining hub positions.

(d) If the minimum runout recorded in (b) and (c) is less than 0.05 mm (0.0020 in.), install the disc in that position.

(e) If the minimum runout recorded in (b) and (c) is greater than 0.05 mm (0.0020 in.), replace the disc and repeat step 3.

(f) Install the torque plate and tighten the 2 bolts.

Torque: 104 N·m (1,065 kgf·cm, 77 ft·lbf)

REAR BRAKE (2JZ–GTE)

COMPONENTS

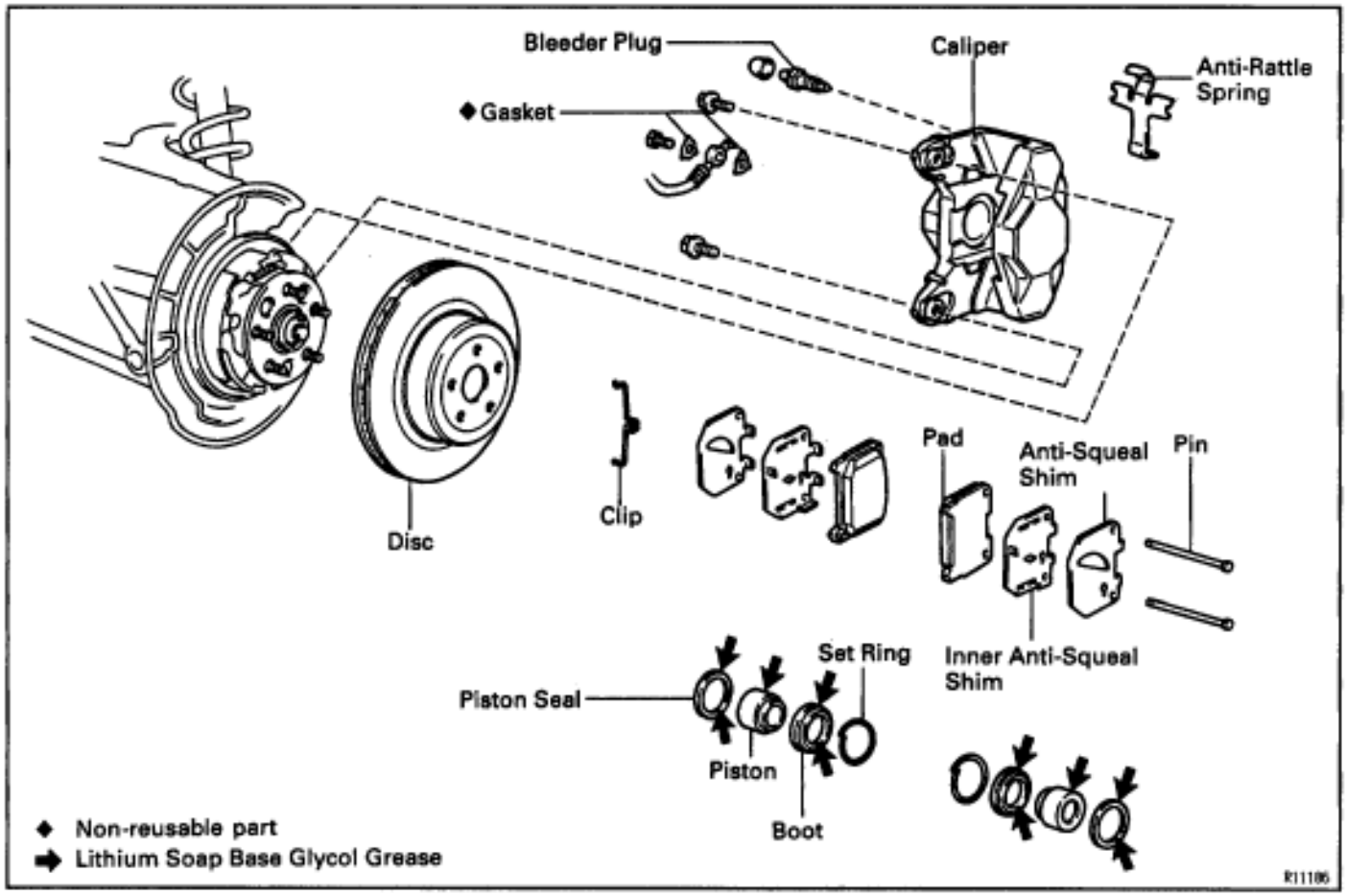

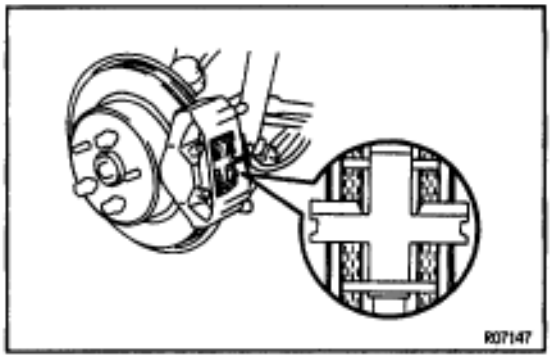

BRAKE PADS REPLACEMENT

1. REMOVE REAR WHEEL

Remove the wheel and temporarily fasten the disc with the hub nuts.

2. INSPECT PAD LINING THICKNESS

Check the pad thickness and replace pads if not within specification.

Minimum thickness: 1.0 mm (0.039 in.)

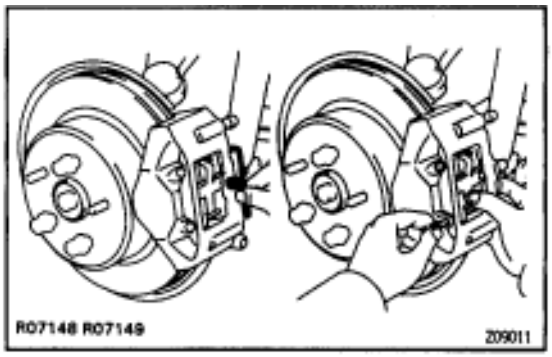

3. REMOVE THESE PARTS:

(a) Clip and 2 pins
(b) Anti–rattle spring
(c) 2 pads
(d) 4 anti–squeal shims

NOTICE: The anti–rattle springs and clip can be used again provided that they have sufficient rebound, no deformation, cracks or wear, and have had all rust, dirt and foreign particles cleaned off.

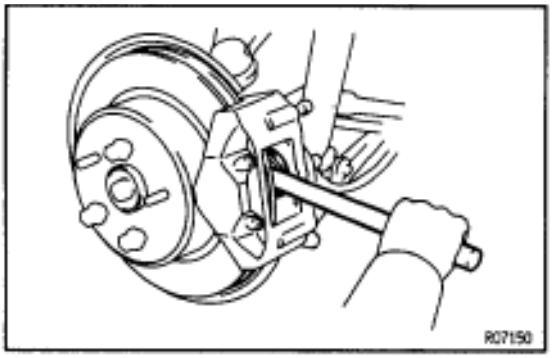

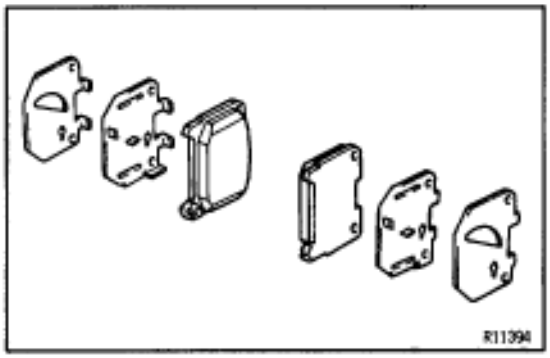

4. CHECK DISC THICKNESS AND RUNOUT
(See page BR–34)

5. INSTALL NEW PADS

NOTICE: When replacing worn pads, the anti–squeal shims must be replaced together with the pads.

(a) Draw out a small amount of brake fluid from the reservoir.

(b) Press in the pistons with a hammer handle or equivalent.
HINT:
- Always change the pads on one wheel at a time as there is a possibility of the opposite piston flying out.
- If the piston is difficult to push in, loosen the bleeder plug and push in the piston while letting some brake fluid escape.

(c) Install the 2 anti–squeal shims on each pad.
HINT:
- Apply disc brake grease to both sides of the inner anti–squeal shim.
- Make sure that the arrow on the shims points upward.

(d) Install the 2 pads with pad wear indicator plates facing downward.

NOTICE: Do not allow oil or grease to get on the rubbing face.

6. INSTALL ANTI–RATTLE SPRING AND 2 PINS

7. INSTALL CLIP

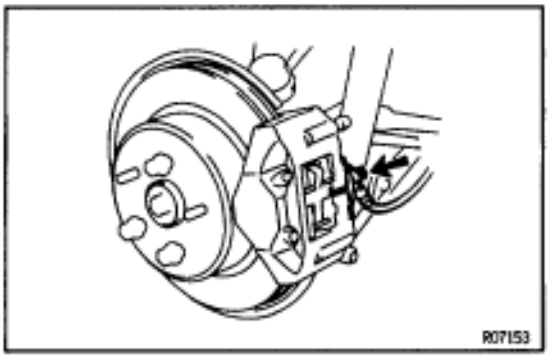

CALIPER REMOVAL

Installation is in the reverse order of removal.

AFTER INSTALLATION, FILL BRAKE RESERVOIR WITH BRAKE FLUID, BLEED BRAKE SYSTEM (See page BR–7) AND CHECK FOR LEAKS

1. REMOVE REAR WHEEL

2. DISCONNECT BRAKE HOSE

(a) Remove the union bolt and 2 gaskets from the caliper, then disconnect the brake hose from the caliper.
Torque: 30 N·m (310 kgf·cm, 22 ft·lbf)
INSTALLATION HINT: Install the flexible hose lock securely in the lock hole in the caliper.

(b) Use a container to catch the brake fluid.

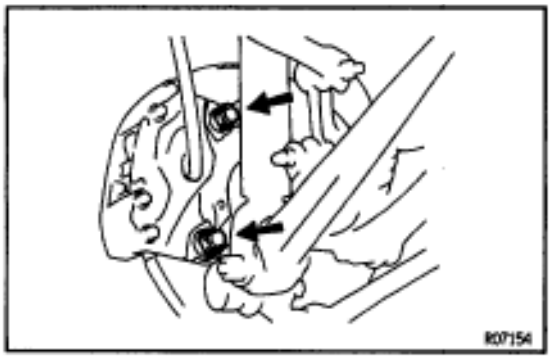

3. REMOVE CALIPER

Remove the 2 mounting bolts and caliper.

Torque: 104 N·m (1,065 kgf·cm, 77 ft·lbf)

4. REMOVE THESE PARTS:

(a) Clip
(b) 2 pins
(c) Anti–rattle spring
(d) 2 pads
(e) 4 anti–squeal shims

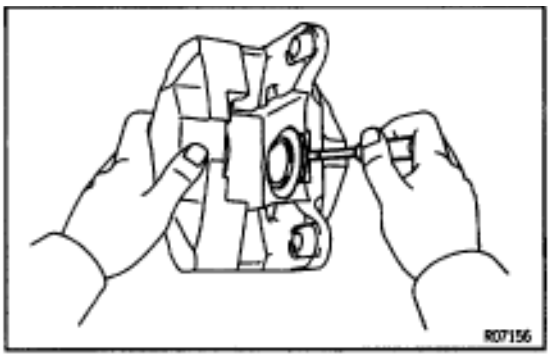

CALIPER DISASSEMBLY

Assembly is in the reverse order of disassembly.

ASSEMBLY NOTICE: Apply lithium soap base glycol grease to the parts indicated by the arrows (See page BR –31)

1. REMOVE CYLINDER BOOT SET RINGS AND BOOTS

Using a screwdriver, remove the 2 cylinder boot set rings and 2 boots.

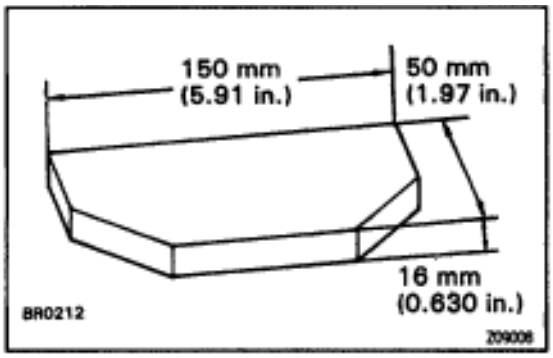

2. REMOVE PISTONS FROM CYLINDER

(a) Prepare a wooden plate to hold the pistons.

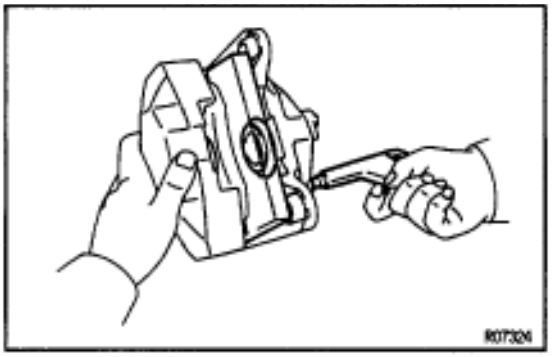

(b) Place the plate between the pistons and insert a pad on one side.
(c) Use compressed air to remove the pistons alternately from the caliper.

DISASSEMBLY CAUTION: Do not place your fingers in front of the pistons when using compressed air.

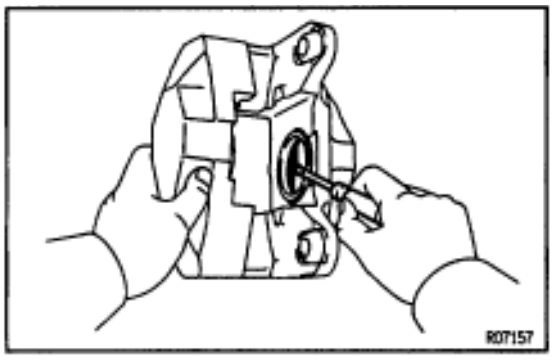

3. REMOVE PISTON SEALS

Using a screwdriver, remove the 2 seals from the cylinder.

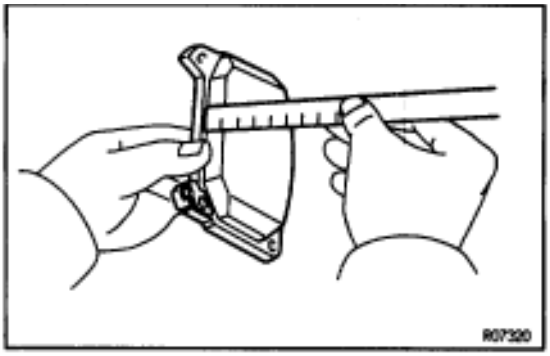

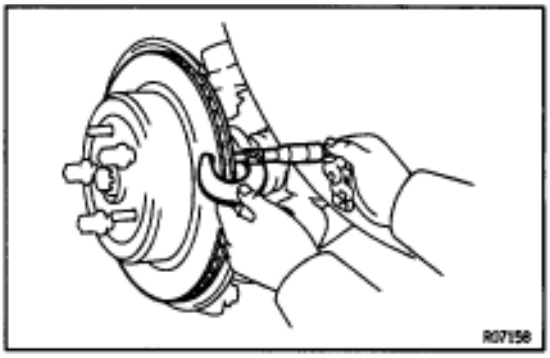

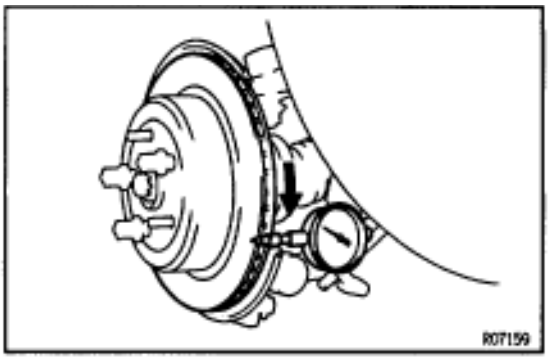

REAR BRAKE COMPONENTS INSPECTION AND REPAIR

1. MEASURE PAD LINING THICKNESS

Using a ruler, measure the lining thickness.

Standard thickness:

11.0 mm (0.433 in.)

Minimum thickness:

1.0 mm (0.039 in.)

Replace the pads if the thickness is less than the minimum (the 1.0 mm slit is no longer visible) or if it shows signs of uneven wear.

2. MEASURE DISC THICKNESS

Using a micrometer, measure the disc thickness.

Standard thickness:

16.0 mm (0.630 in.)

Minimum thickness:

15.0 mm (0.591 in.)

Replace the disc if the thickness of the disc is at the minimum thickness or less. Replace the disc or grind it on a lathe if it is badly scored or worn unevenly.

3. MEASURE DISC RUNOUT

Using a dial indicator, measure disc runout 10 mm (0.39 in.) from the outer edge of the disc.

Maximum disc runout:

0.05 mm (0.0020 in.)

If the disc's runout is at the maximum value or greater, check the bearing play in the axial direction and check the axle hub runout (See page SA–38). If the bearing play and axle hub runout are not abnormal, adjust the disc runout.

4. IF NECESSARY, ADJUST DISC RUNOUT

(a) Remove the hub nuts and the disc. Reinstall the disc 1/5 of a turn round from its original position on the hub. Install and torque the hub nuts.

Torque: 103 N·m (1,050 kgf·cm, 76 ft·lbf)

Remeasure the disc runout. Make a note of the runout and the disc's position on the hub.

(b) Repeat (a) until the disc has been installed on the 3 remaining hub positions.

(c) If the minimum runout recorded in (a) and (b) is less than 0.05 mm (0.0020 in.), install the disc in that position.

(d) If the minimum runout recorded in (a) and (b) is greater than 0.05 mm (0.0020 in.), replace the disc and repeat step 3.

REAR BRAKE (Parking Brake)

COMPONENTS

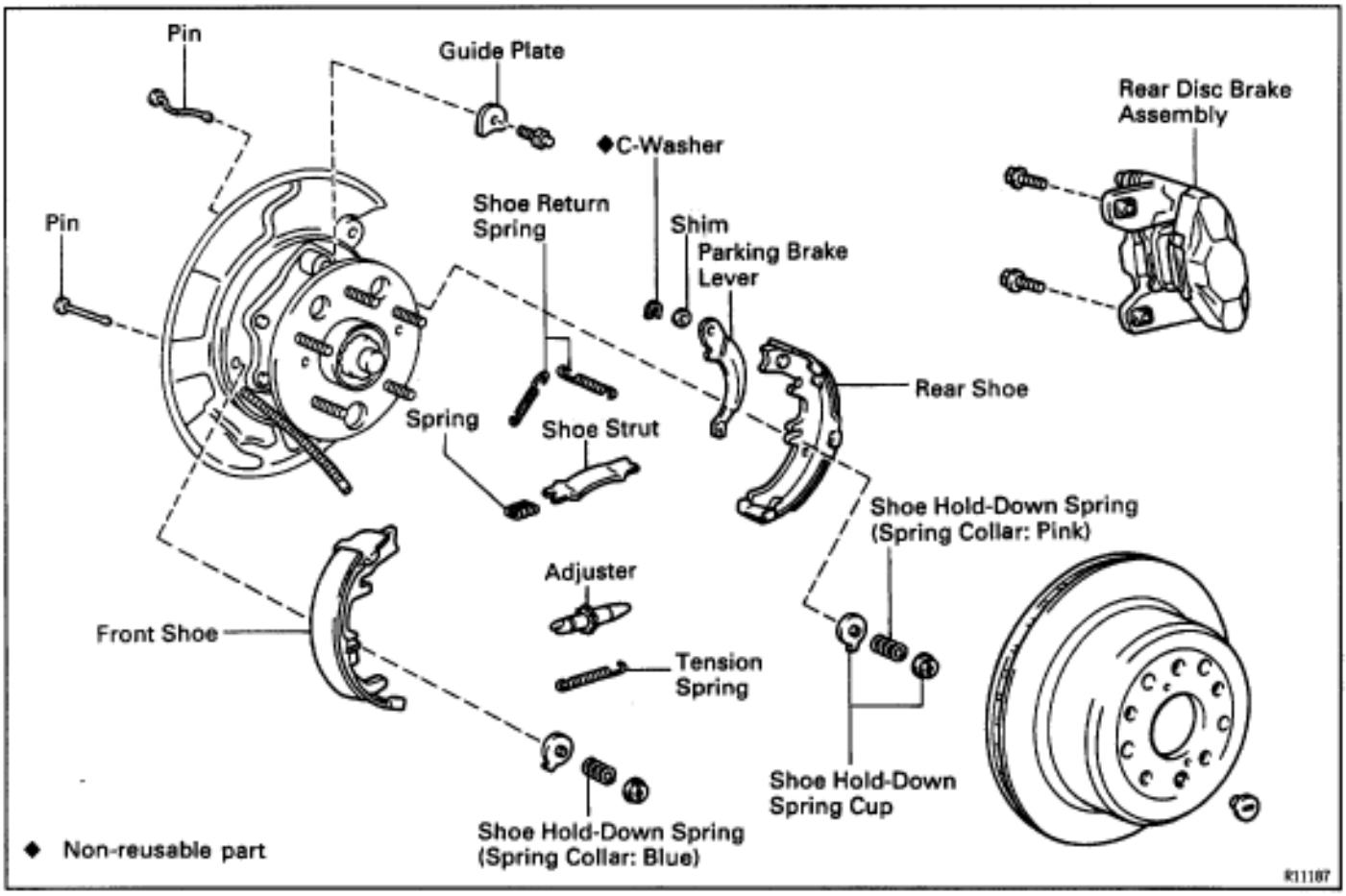

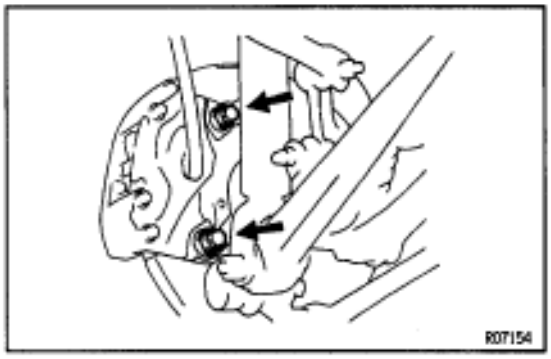

PARKING BRAKE DISASSEMBLY

1. REMOVE REAR WHEEL

2. REMOVE REAR DISC BRAKE ASSEMBLY

(a) Remove the 2 mounting bolts and remove the disc brake assembly.

(b) Suspend the disc brake securely and so the hose is not stretched.

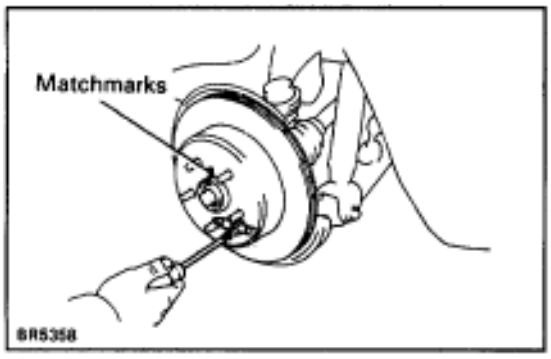

3. REMOVE DISC

(a) Place matchmarks on the disc and rear axle hub.

(b) Remove the disc.

HINT: If the disc cannot be removed easily, return the shoe adjuster until the disc turns freely.

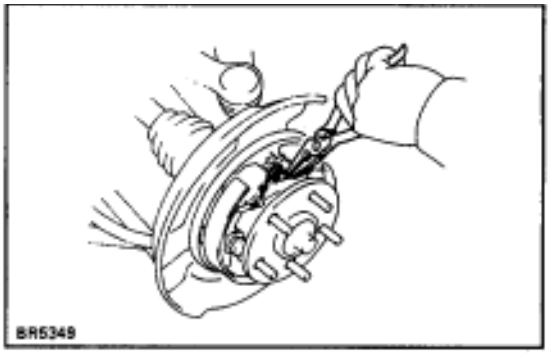

4. REMOVE SHOE RETURN SPRINGS

Using needle–nose pliers, remove the 2 shoe return springs.

5. REMOVE SHOE STRUT WITH SPRING

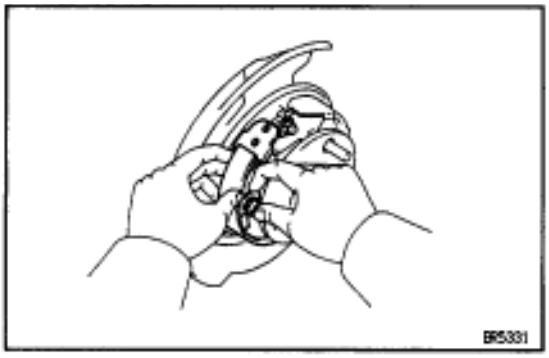

6. REMOVE FRONT SHOE, ADJUSTER AND TENSION SPRING

(a) Slide out the front shoe and remove the shoe adjuster.
(b) Disconnect the tension spring and remove the front shoe.

7. REMOVE REAR SHOE

(a) Slide out the rear shoe.
(b) Remove the tension spring from the rear shoe.

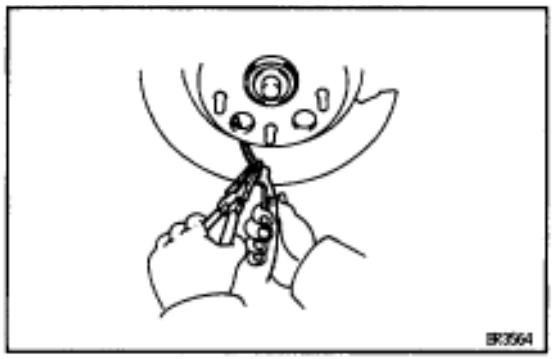

(c) Disconnect the parking brake cable from the parking brake shoe lever.
(d) Remove the shoe hold–down spring cups, springs and pins.

PARKING BRAKE COMPONENTS INSPECTION AND REPAIR

1. INSPECT DISASSEMBLED PARTS

Inspect the disassembled parts for wear, rust or damage.

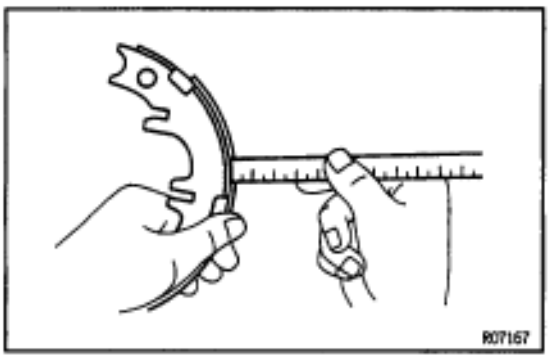

2. MEASURE BRAKE SHOE LINING THICKNESS

Using a ruler, measure the thickness of the shoe lining.

Standard thickness:

2.5 mm (0.098 in.)

Minimum thickness:

1.0 mm (0.039 in.)

If the lining thickness is at the minimum thickness or less, or if there is severe, uneven wear, replace the brake shoe.

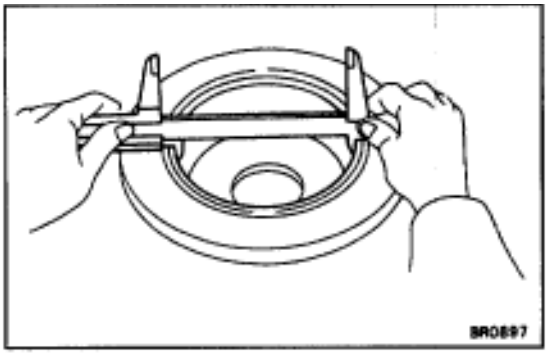

3. MEASURE BRAKE DISC INSIDE DIAMETER

Using a vernier caliper, measure the inside diameter of the disc.

Standard inside diameter:

190 mm (7.48 in.)

Maximum inside diameter:

191 mm (7.52 in.)

Replace the disc if the inside diameter is at the maximum value or more. Replace the disc or grind it with a lathe if the disc is badly scored or worn unevenly.

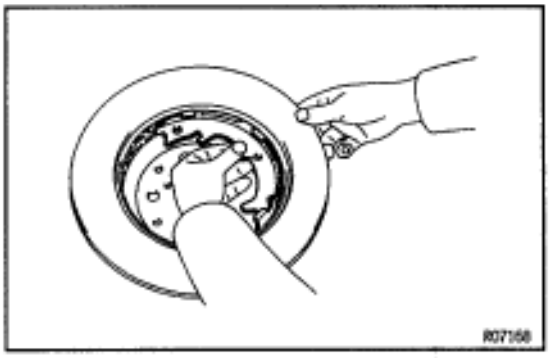

4. INSPECT PARKING BRAKE LINING AND DISC FOR PROPER CONTACT

Apply chalk to the inside surface of the disc, then grind down the brake shoe lining to fit. If the contact between the disc and the brake shoe lining is improper, repair it using a brake shoe grinder or replace the brake shoe assembly.

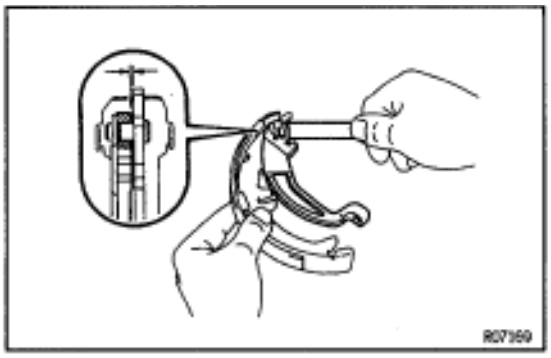

5. MEASURE CLEARANCE BETWEEN PARKING BRAKE SHOE AND LEVER

Using a feeler gauge, measure the clearance.

Standard clearance:

Less than 0.35 mm (0.0138 in.)

If the clearance is not within the specification, replace the shim with one of the correct size.

Thickness m(in.)	Thickness mm(in.)
0.3 (0.012)	0.8 (0.031) (2JZ–GTE only)
0.6 (0.024)	0.9 (0.035) (2JZ–GE only)

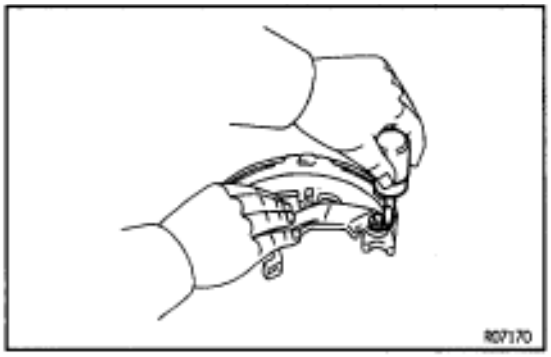

6. IF NECESSARY, REPLACE SHIM

(a) Remove the parking brake shoe lever, and install the correct size shim.

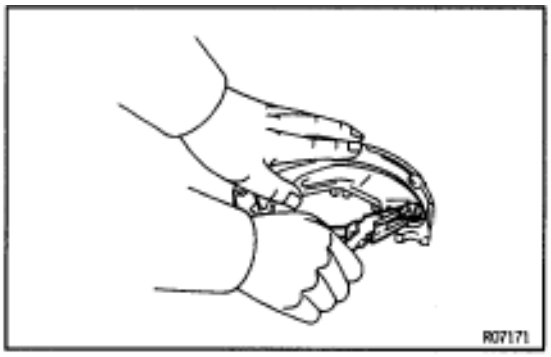

(b) Install the parking brake shoe lever with a new C–washer.

(c) Remeasure the clearance.

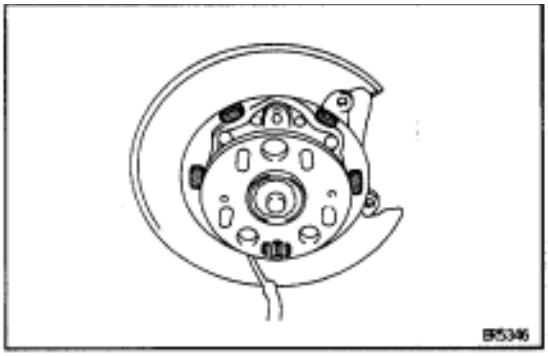

PARKING BRAKE ASSEMBLY

1. APPLY HIGH TEMPERATURE GREASE ON THESE PARTS:

(a) Rubing surfaces of the backing plate and shoe

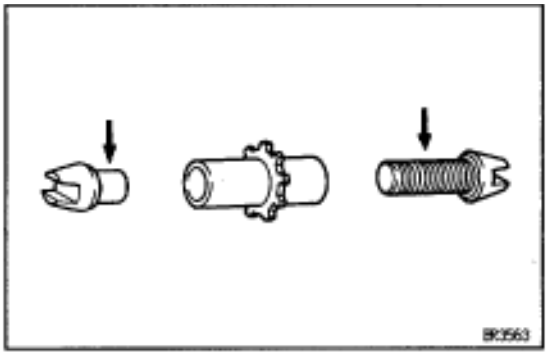

(b) Adjuster

2. CONNECT PARKING BRAKE CABLE TO PARKING BRAKE LEVER

(a) Install the shoe hold–down springs, cups and pins.

(b) Connect the parking brake cable to the parking brake shoe lever of the rear shoe.

3. INSTALL REAR SHOE

Slide in the rear shoe between the shoe hold–down spring cup and the backing plate.

NOTICE: Do not allow oil or grease to get on the rubbing face.

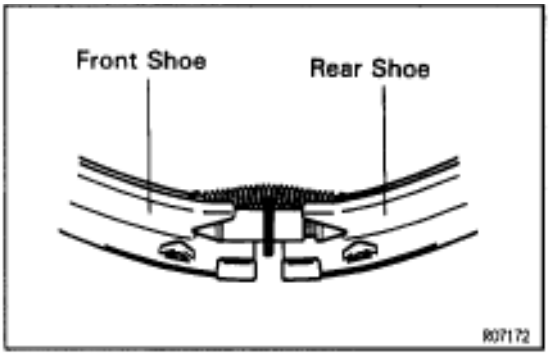

4. INSTALL TENSION SPRING, FRONT SHOE AND ADJUSTER

(a) Install the tension spring on the rear shoe.

(b) Install the front shoe on the tension spring.

(c) Install the adjuster between the front and rear shoes.

(d) Slide in the front shoe between the shoe hold–down spring cup and the backing plate.

5. INSTALL STRUT WITH SPRING

Install the strut with the spring forward.

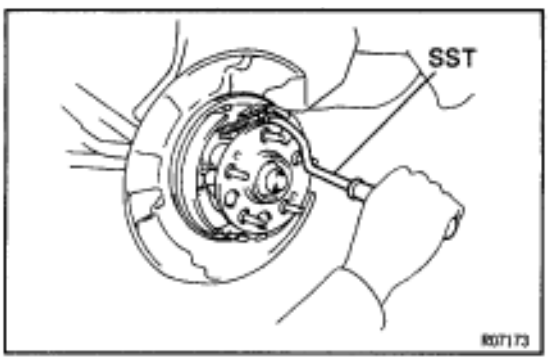

6. INSTALL SHOE RETURN SPRINGS

Using SST, install the front shoe return spring and then install the rear shoe return spring.

SST 09718–20010

7. INSTALL DISC

(a) Before installing, polish the disc and shoe surfaces with sandpaper.

(b) Align the matchmarks and install the disc.

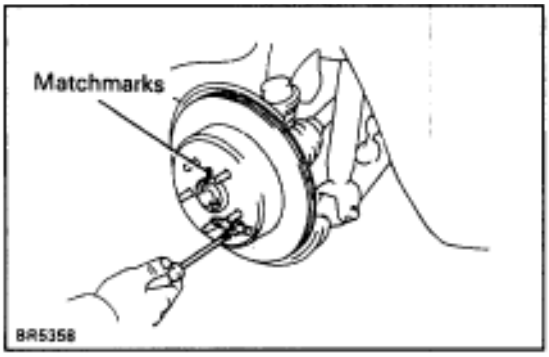

HINT: If there are no matchmarks, temporarily install the disc, then measure the disc runout and install the disc in the position.
(See page BR–30 or BR–34)

8. ADJUST PARKING BRAKE SHOE CLEARANCE

(a) Temporarily install the hub nuts.
(b) Remove the hole plug.
(c) Turn the adjuster and expand the shoes until the disc locks.
(d) Return the adjuster 8 notches.
(e) Install the hole plug.

9. INSTALL REAR DISC BRAKE ASSEMBLY

Install the disc brake assembly and torque the 2 mounting bolts.

Torque: 104 N·m (1,065 kgf·cm, 77 ft·lbf)

10. INSTALL REAR WHEEL

11. SETTLING PARKING BRAKE SHOES AND DISC

(a) Drive the vehicle at about 50 km/h (31mph) on a safe, level and dry road.
(b) With the parking brake release button pushed in, pull on the lever with 88 N (9 kgf, 19.8 lbf) of force.
(c) Drive the vehicle for about 400 meters (0.25 mile) in this condition.
(d) Repeat this procedure 2 or 3 times.

12. CHECK AND ADJUST PARKING BRAKE LEVER TRAVEL

PROPORTIONING AND BY–PASS VALVE (P & B VALVE)

FLUID PRESSURE INSPECTION

1. INSTALL LSPV GAUGE (SST) AND BLEED AIR

SST 09709–29017

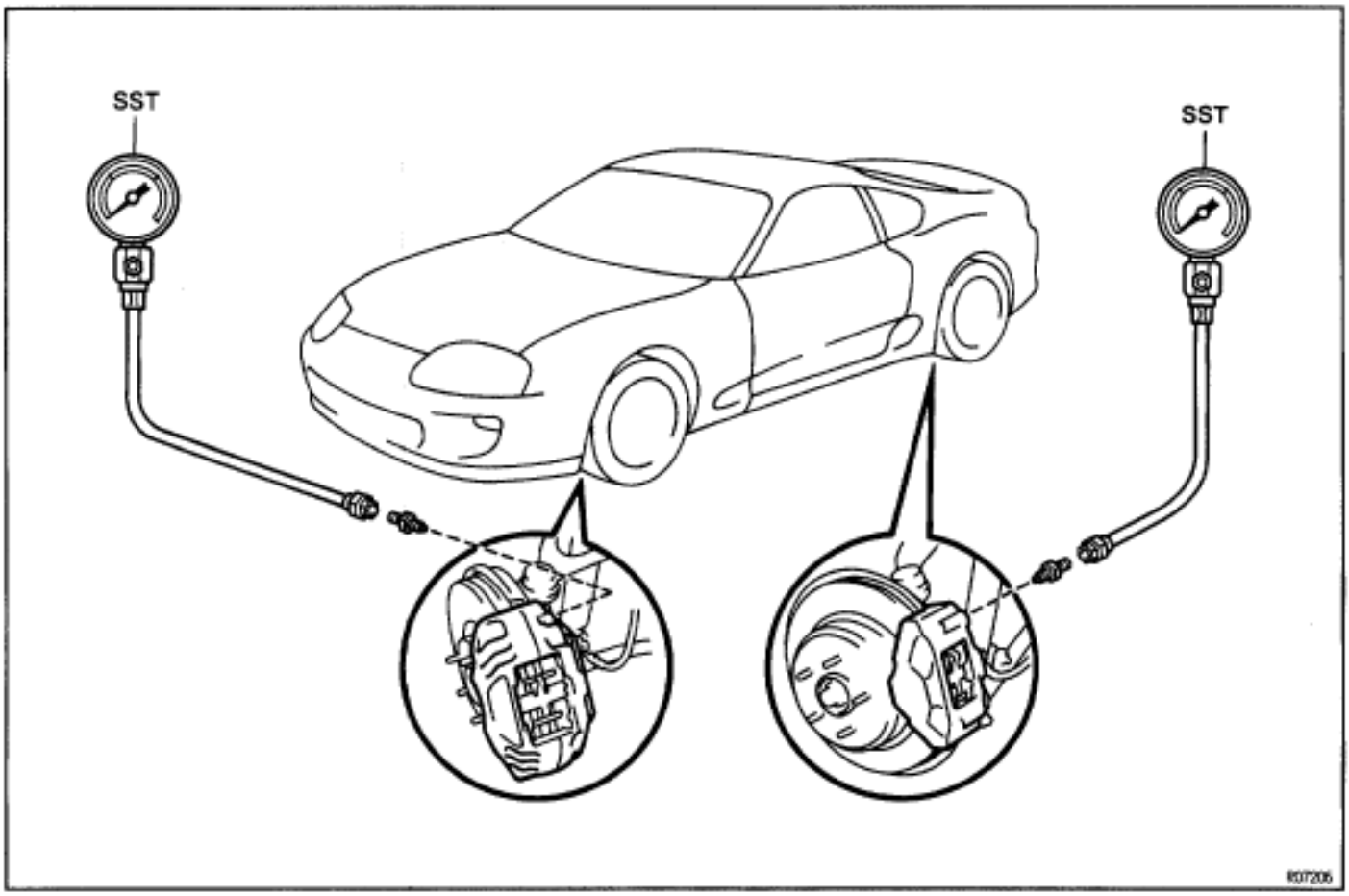

2. RAISE MASTER CYLINDER PRESSURE AND CHECK REAR WHEEL CYLINDER PRESSURE

2JZ–GTE:

Master cylinder pressure	Rear wheel cylinder pressure
2,452 kPa (25 kgf/cm^2, 356 psi)	2,452 kPa (25 kgf/cm^2, 356 psi)
7,845 kPa (80 kgf/cm^2, 1,138 psi)	4,452 kPa (45.4 kgf/cm^2, 646 psi)

2JZ–GE:

Master cylinder pressure	Rear wheel cylinder pressure
2,942 kPa (30 kgf/cm^2, 427 psi)	2,942 kPa (30 kgf/cm^2, 427 psi)
7,845 kPa (80 kgf/cm^2, 1,138 psi)	4,756 kPa (48.5 kgf/cm^2, 690 psi)

Specifications: If the rear wheel cylinder pressure is incorrect, replace the master cylinder.

3. **BLEED BRAKE SYSTEM (See page BR–7)**
4. **CHECK FOR FLUID LEAKAGE**

ANTI–LOCK BRAKE SYSTEM (ABS)

ABS ACTUATOR

COMPONENTS

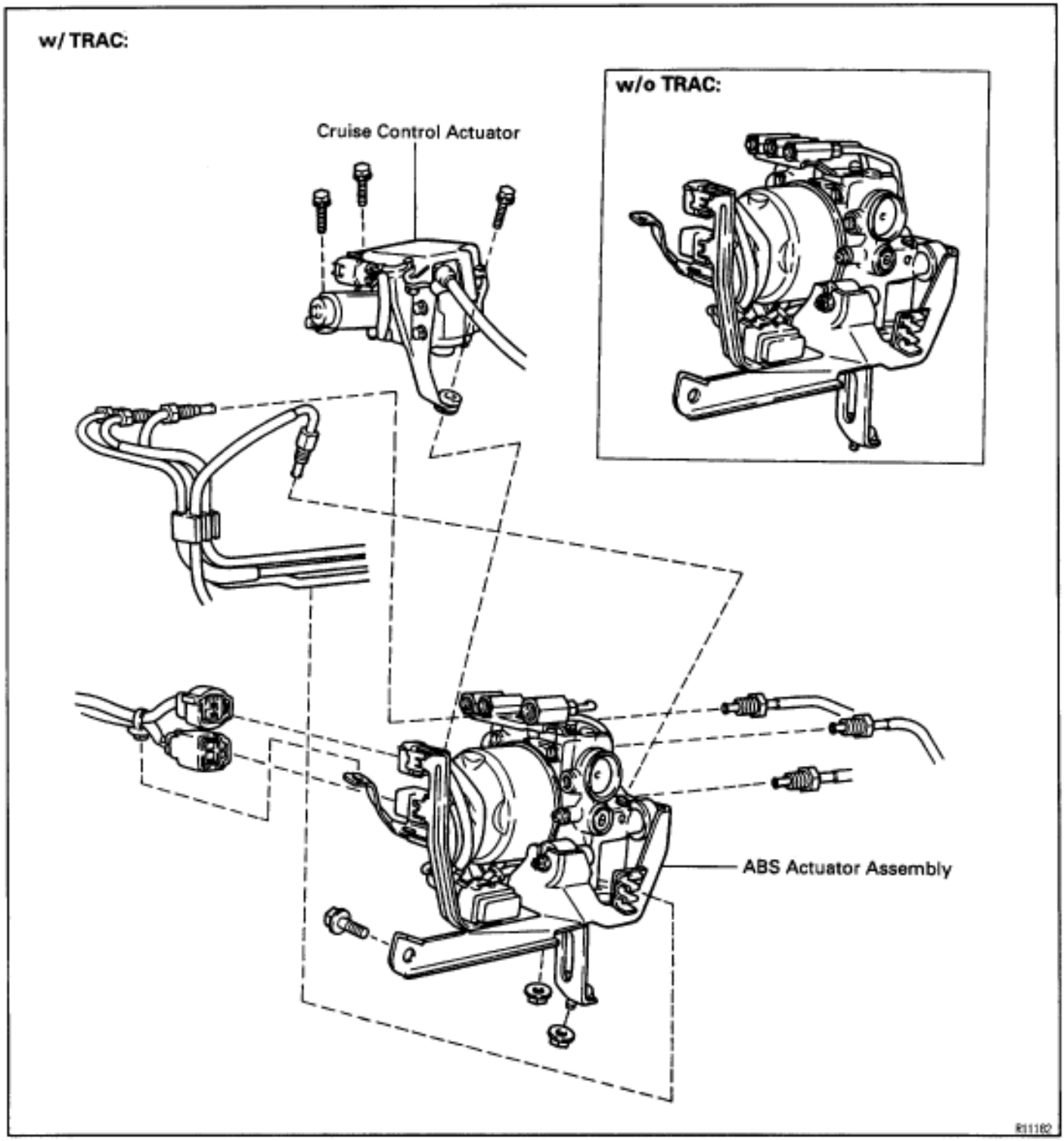

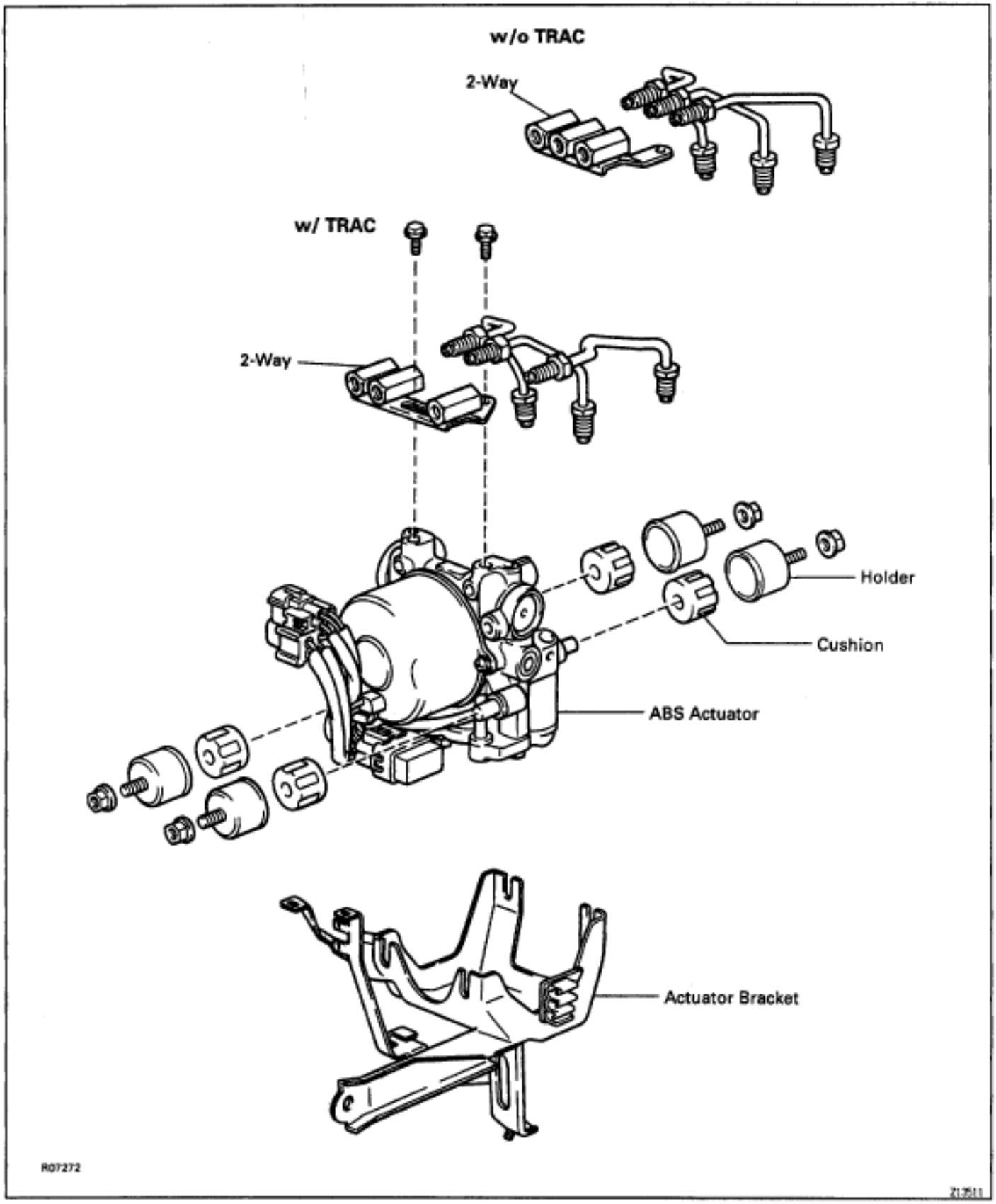
w/o TRAC
2-Way
w/ TRAC
2-Way
Holder
Cushion
ABS Actuator
Actuator Bracket
R07272

ABS ACTUATOR REMOVAL

Installation is in the reverse order of removal.

AFTER INSTALLATION, BLEED BRAKE SYSTEM (See page BR–7) AND BLEED TRAC SYSTEM (See page BR–9)

1. REMOVE CRUISE CONTROL ACTUATOR

Remove the 3 bolts and cruise control actuator.

Torque:

Cruise control actuator X Body

13 N·m (130 kgf·cm, 9 ft·lbf)

Cruise control actuator X ABS actuator X Body

19 N·m (195 kgf·cm, 14 ft·lbf)

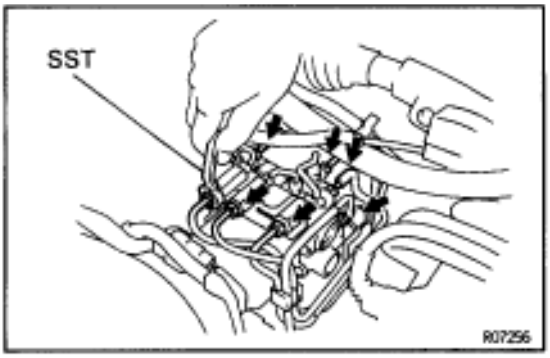

2. DISCONNECT BRAKE LINES

Using SST, disconnect the brake lines from the ABS actuator.

SST 09751–36011

Torque:

M10: 15 N·m (155 kgf·cm, 11 ft·lbf)

M12: 20 N·m (200 kgf·cm, 15 ft·lbf)

3. DISCONNECT CONNECTORS

Disconnect the 2 connectors and wire harness clamp from the bracket.

4. REMOVE ABS ACTUATOR ASSEMBLY

Remove the bolt, 2 nuts and ABS actuator assembly.

Torque: 19 N·m (195 kgf·cm, 14 ft·lbf)

5. REMOVE 2–WAY

(a) Using SST, remove the 3 brake line.

SST 09751–36011

Torque: 15 N·m (155 kgf·cm, 11 ft·lbf)

(b) Remove the 2 bolt and 2 way.

Torque: 8.8 N·m (90 kgf·cm, 78 in·lbf)

6. REMOVE ABS ACTUATOR

Remove the 4 nuts and actuator from bracket.

Torque: 5.4 N·m (55 kgf·cm, 48 in.·lbf)

7. REMOVE 4 CUSHIONS AND HOLDERS

ABS ACTUATOR INSPECTION

w / TRAC HINT: Using the ABS actuator checker (SST), check the operation of the actuator. If the actuator does not operate, check the operation of sub –wire harness G according to instructions on pages BR–65 and BR–71. If the solenoid and/or pump motor relay are abnormal, replace the relay and inspect the actuator operation again.

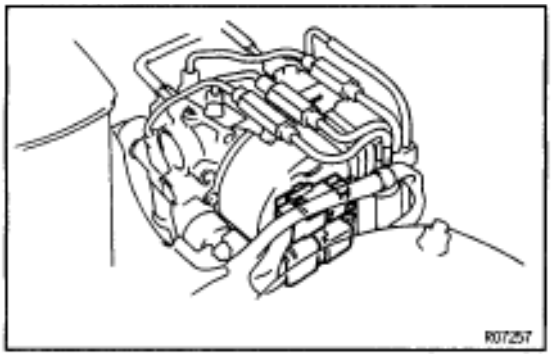

1. INSPECT BATTERY POSITIVE VOLTAGE

Battery positive voltage:

10–14 V

2. DISCONNECT CONNECTORS

(a) Disconnect the 2 connectors from the actuator.

(b) w/o TRAC:

Disconnect the 2 connectors from the control relay.

3. CONNECT ACTUATOR CHECKER (SST) TO ACTUATOR

(a) Connect the actuator checker (SST) to the actuator side wire harnesses via the sub–wire harnesses (SST), as shown.

w/o TRAC:

SST 09990–00150, 09990–00200, and 09990–00210

w/ TRAC:

SST 09990–00150, 09990–00210, 09990–00250, and 09990–00280

(b) Connect the red cable of the checker to the battery positive (+) terminal and the black cable to negative (–) terminal. Connect the black cable of the sub–wire harnesses to the battery negative (–) terminal or body ground.

SST 09990–00163

(c) Place ”SHEET A” (SST) on the actuator checker.

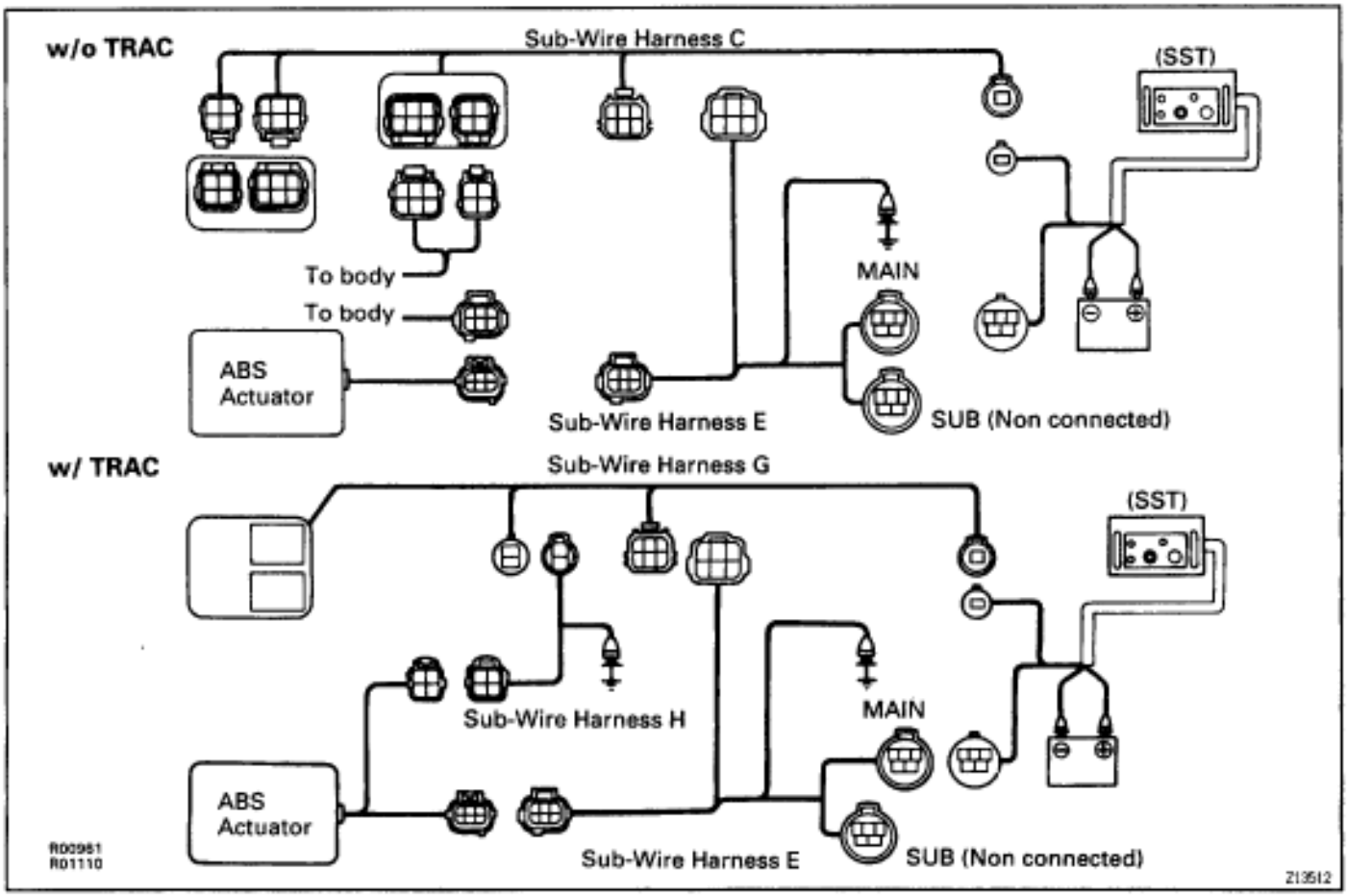

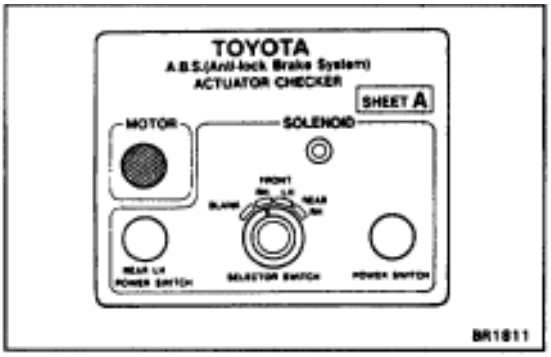

4. INSPECT BRAKE ACTUATOR OPERATION

(a) Start the engine, and run it at idle speed.

(b) Turn the selector switch of the actuator checker to the "FRONT RH" position.

(c) Push and hold in the MOTOR switch for a few seconds.

(d) Depress the brake pedal and hold it until step (g) is completed.

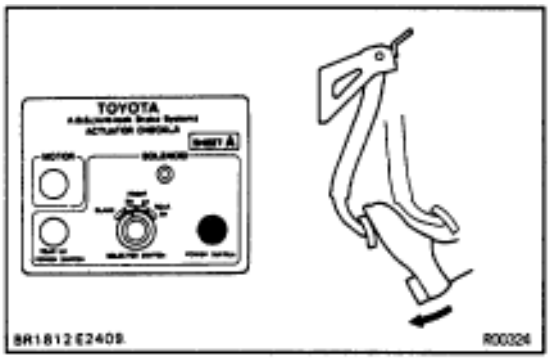

(e) Push the POWER SWITCH, and check that the brake pedal cannot be depressed.

NOTICE: Do not keep the MAIN switch pushed down for more than 10 seconds.

(f) Release the switch, and check that the pedal can be depressed.

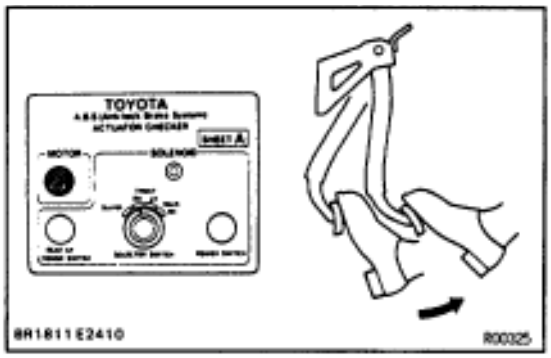

(g) Push and hold in the MOTOR switch for a few seconds, and check that the pedal returns.

(h) Release the brake pedal.

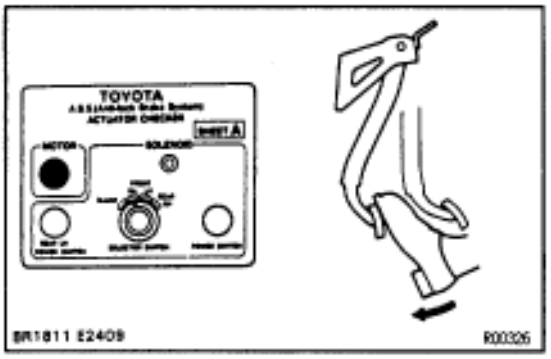

(i) Push and hold in the MOTOR switch for a few seconds.

(j) Depress the brake pedal and hold it for about 15 seconds. As you hold the pedal down, push the MOTOR switch for a few seconds. Check that the brake pedal does not pulsate.

5. INSPECT FOR OTHER WHEELS

(a) Turn the selector switch to the "FRONT LH" position.

(b) Repeat (c) to (j) of step 4, checking the actuator operation in the same way.

(c) Also, inspect the "REAR RH" and "REAR LH" positions following the same procedure.

HINT: When inspecting the "REAR LH" position, push the REAR LH switch instead of the POWER SWITCH. This makes it possible to inspect wherever the selector switch position indicates.

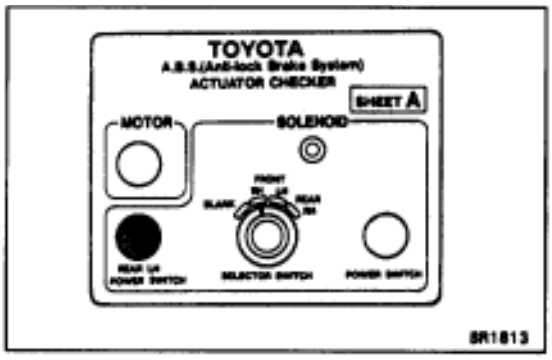

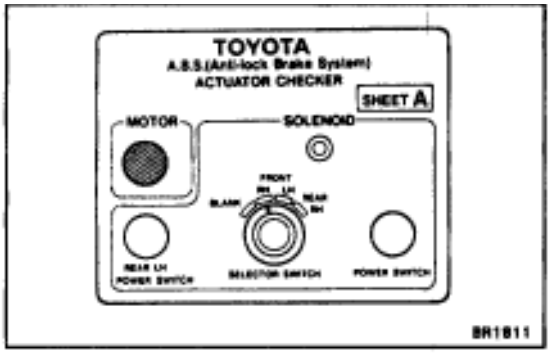

6. PUSH MOTOR SWITCH

Push and hold in the MOTOR switch for a few seconds.

7. DISCONNECT ACTUATOR CHECKER (SST) FROM ACTUATOR

Disconnect the actuator checker (SST) and sub–wire harnesses (SST) from the actuator.

w/o TRAC:

SST 09990–00150, 09990–00163, 09990–00200, and 09990–00210

w/ TRAC:

SST 09990–00150, 09990–00163, 09990–00210, 09990–00250 and 09990–00280

8. CONNECT CONNECTORS

(a) Connect the 2 connectors to the actuator.

(b) w/o TRAC:
Connect the 2 connectors to the control relay.

9. CLEAR DIAGNOSTIC TROUBLE CODES

(See page BR–55)

FRONT SPEED SENSOR COMPONENTS

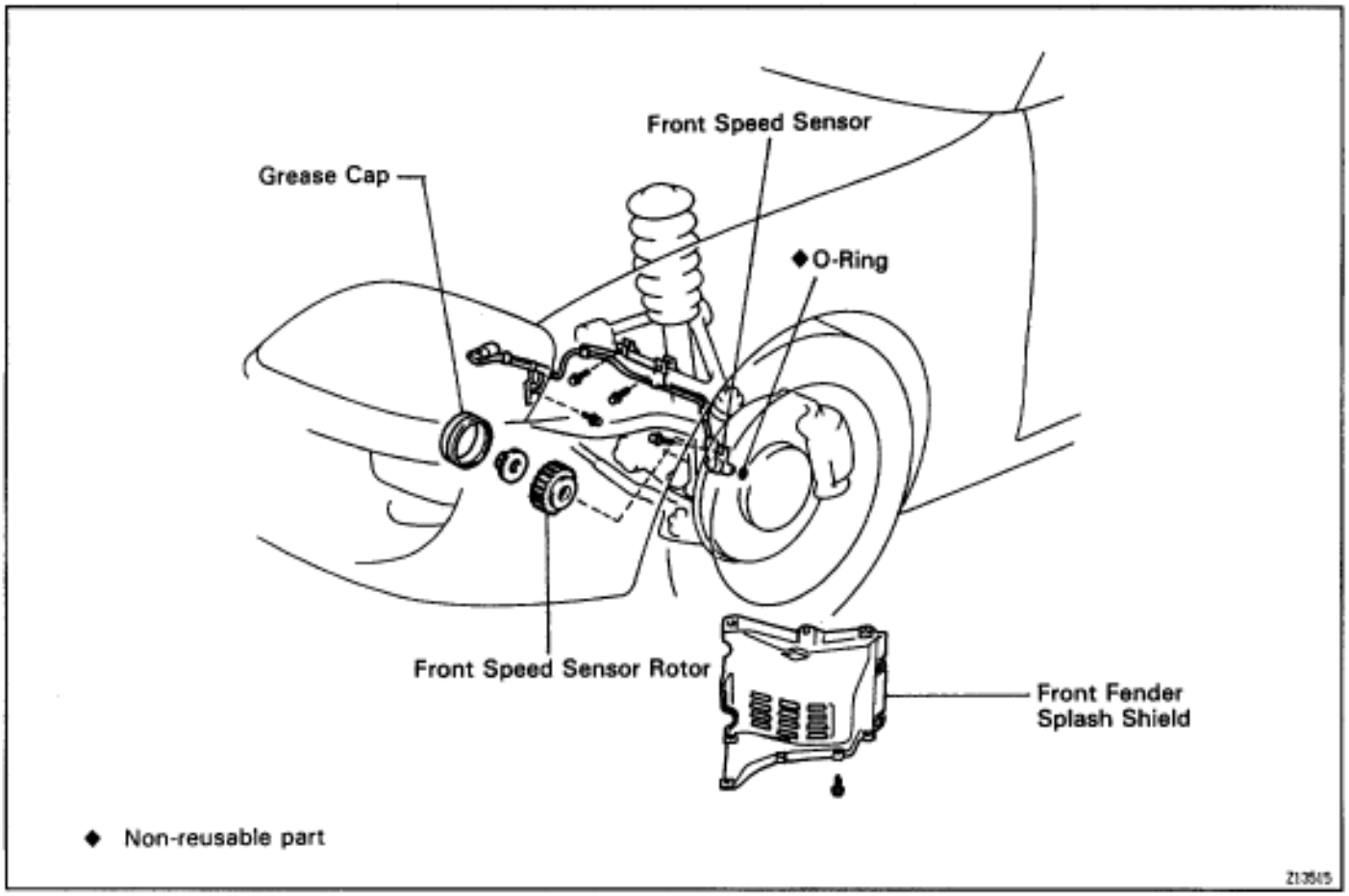

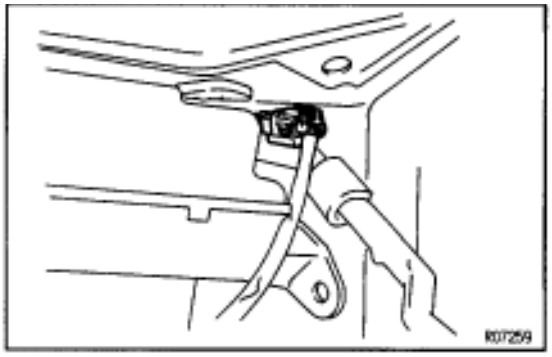

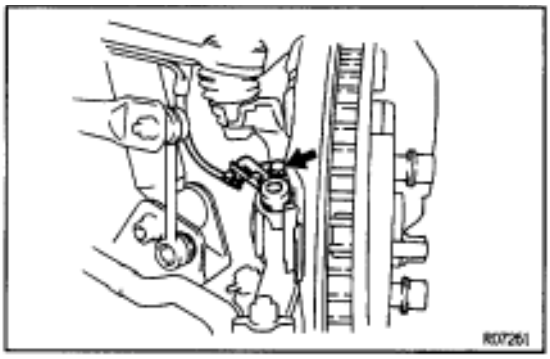

FRONT SPEED SENSOR REMOVAL

Installation is in the reverse order of removal.

AFTER INSTALLATION, CHECK SPEED SENSOR SIGNAL (See page BR–62)

1. DISCONNECT CONNECTOR

(a) Remove the front fender splash shield.

(b) Disconnect the speed sensor connector.

2. REMOVE SPEED SENSOR

(a) Remove the 3 clamp bolts holding the sensor harness to the body and upper suspension arm.
Torque: 5.4 N·m (55 kgf·cm, 48 in.·lbf)

(b) Remove the speed sensor from the steering knuckle.
Torque: 7.8 N·m (80 kgf·cm, 69 in.·lbf)

(c) Remove the O–ring from the speed sensor.

REAR SPEED SENSOR COMPONENTS

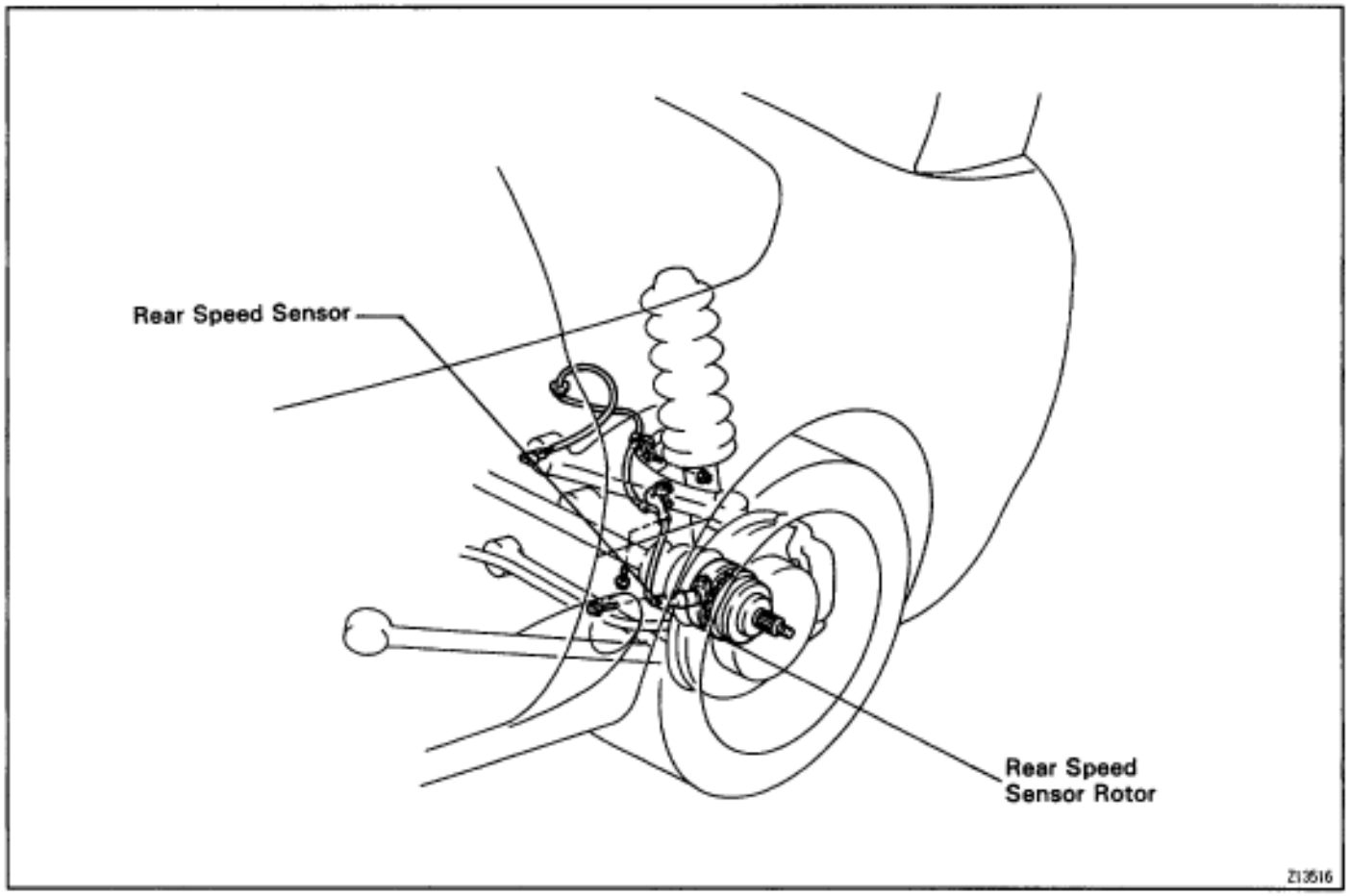

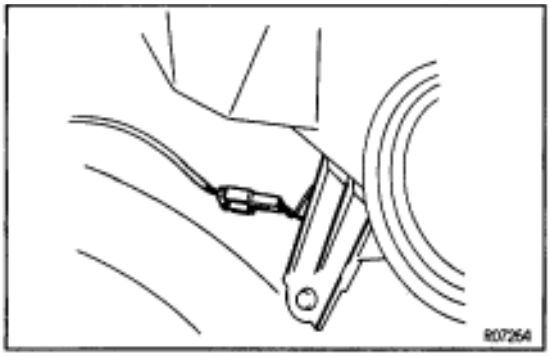

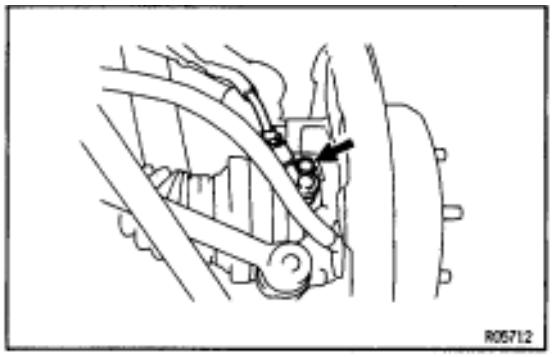

REAR SPEED SENSOR REMOVAL

Installation is in the reverse order of removal.
AFTER INSTALLATION, CHECK SPEED SENSOR SIGNAL (See page BR–62)

1. DISCONNECT SPEED SENSOR CONNECTOR

(a) Remove the rear seat cushion and seat back.
(b) Remove the quarter trim panel.
(c) Disconnect the speed sensor connector, and pull out the sensor wire harness with the grommet.

2. REMOVE SPEED SENSOR

(a) Remove the 2 clamp bolts holding the sensor wire harness to the body and upper arm.
Torque: 5.4 N·m (55 kgf·cm, 48 in.·lbf)
(b) Remove the speed sensor from the axle carrier.
Torque: 7.8 N·m (80 kgf·cm, 69 in.·lbf)

–MEMO–

TROUBLESHOOTING

HOW TO PROCEED WITH TROUBLESHOOTING

Perform troubleshooting in accordance with the procedure on the following pages.

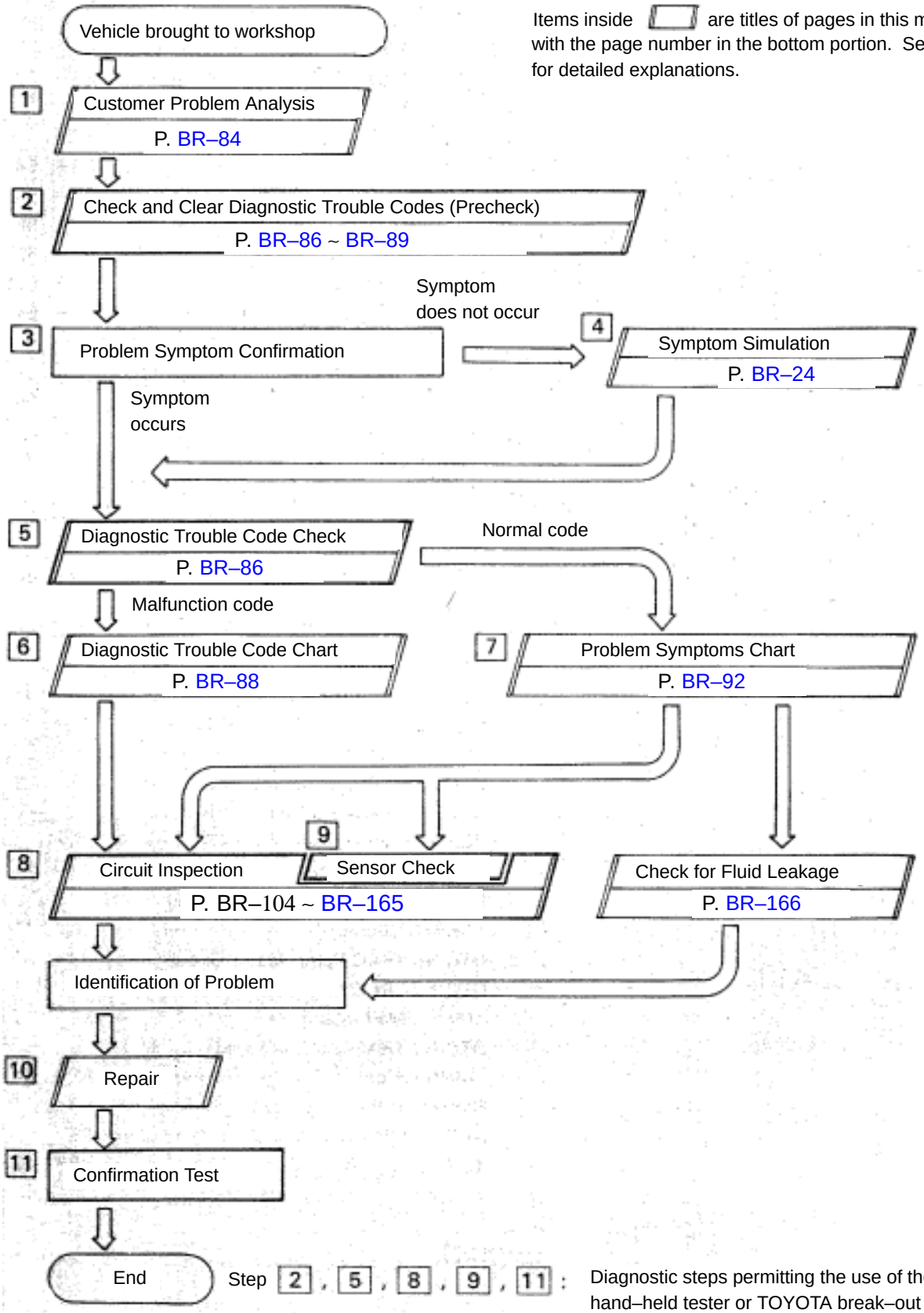

Items inside ▭ are titles of pages in this manual, with the page number in the bottom portion. See the pages for detailed explanations.

Step 2 , 5 , 8 , 9 , 11 : Diagnostic steps permitting the use of the TOYOTA hand–held tester or TOYOTA break–out box.

CUSTOMER PROBLEM ANALYSIS CHECK SHEET

ABS Check Sheet

Inspector's Name:

Customer's Name		Registration No.	
		Registration Year	/ /
		Frame No.	
Date Vehicle Brought In	/ /	Odometer Reading	km Miles

Date Problem First Occurred	/ /
Frequency Problem Occurs	☐ Continuous ☐ Intermittent (times a day)

Symptoms	☐ ABS does not operate.	
	☐ ABS does not operate efficiently.	
	ABS Warning Light Abnormal	☐ Remains ON ☐ Does not Light Up

Check Item	TRAC Indicator Light	☐ Normal ☐ Does not Light Up

Diagnostic Trouble Code Check	1st Time	☐ Normal Code ☐ Malfunction Code (Code)
	2nd Time	☐ Normal Code ☐ Malfunction Code (Code)

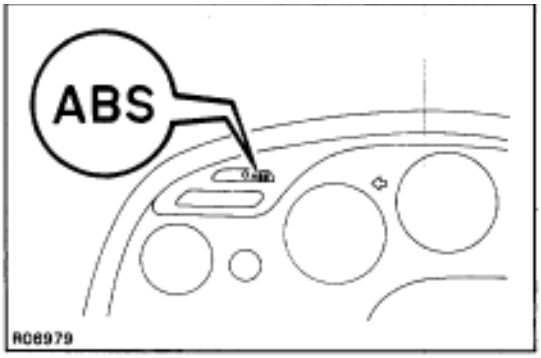

DIAGNOSIS SYSTEM
INDICATOR CHECK

When the ignition switch is turned ON, check that the ABS warning light goes on for 3 seconds.

HINT: If the indicator check result is not normal, proceed to troubleshooting for the ABS warning light circuit (See page BR–107)

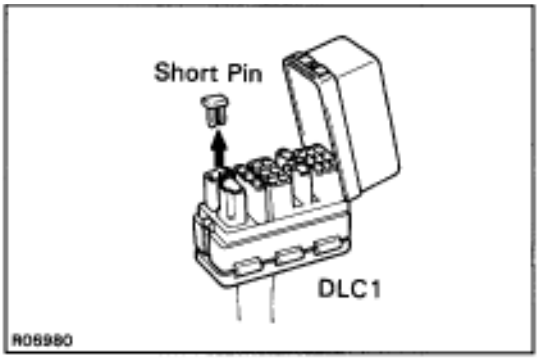

DIAGNOSTIC TROUBLE CODE CHECK

1. Turn the ignition switch ON.
2. Disconnect the Short Pin from DLC1.

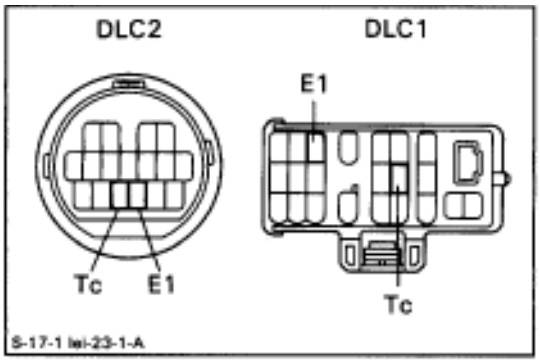

3. Using SST, connect terminals Tc and E1 of DLC2 or DLC1.
   SST 09843–18020
4. Read the diagnostic trouble code from the ABS warning light on the combination meter.
   HINT: If no code appears, inspect the diagnostic circuit or ABS warning light circuit (See page BR–112 or BR–107).

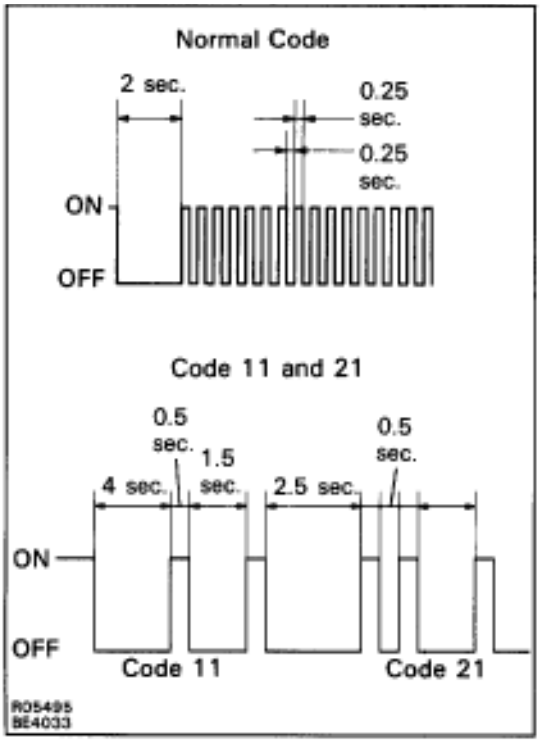

As an example, the blinking patterns for normal code and codes 11 and 21 are shown on the left.

5. Codes are explained in the code table on page BR–56.
6. After completing the check, disconnect terminals Tc and E1, and turn off the display.
   If 2 or more malfunctions are indicated at the same time, the lowest numbered diagnostic trouble code will be displayed first.

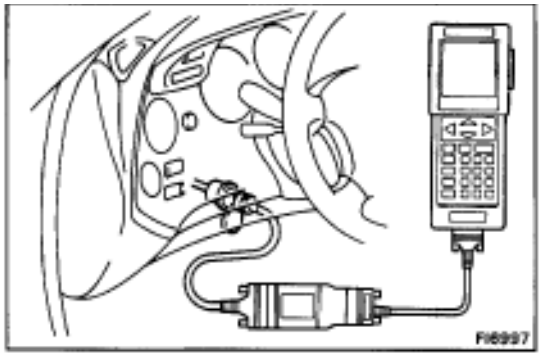

ECU DATA MONITOR USING TOYOTA HAND–HELD TESTER

1. Hook up the TOYOTA hand–held tester to the DLC2.
2. Monitor the ECU data by following the prompts on the scan tool screen.
   HINT: TOYOTA hand–held tester has a ”Snapshot” function which records the monitored data.
   Please refer to the TOYOTA hand–held tester operator’s manual for further details.

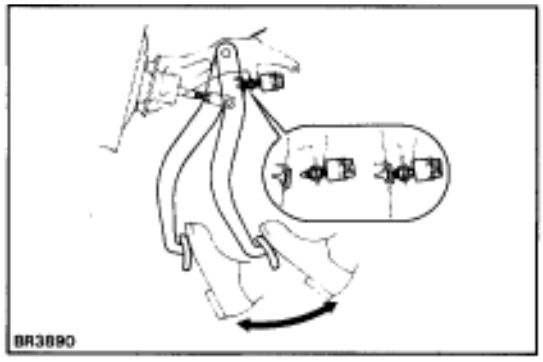

DIAGNOSTIC TROUBLE CODE CLEARANCE

1. Using SST, connect terminals Tc and E1 of DLC2 or DLC1.
   SST 09843–18020
2. IG switch ON.
3. Clear the diagnostic trouble codes stored in ECU by depressing the brake pedal 8 or more times within 3 seconds.
4. Check that the warning light shows the normal code.
5. Remove the SST from the terminals of DLC2 or DLC1.
6. Connect the Short Pin to DLC1.
   HINT: Cancellation can also be done by removing the ECU–B fuse, but in this case, other memory systems will also be cancelled out.

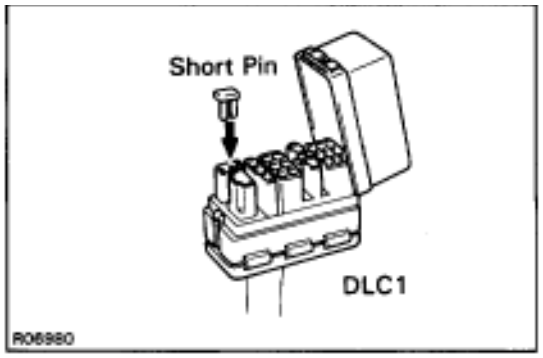

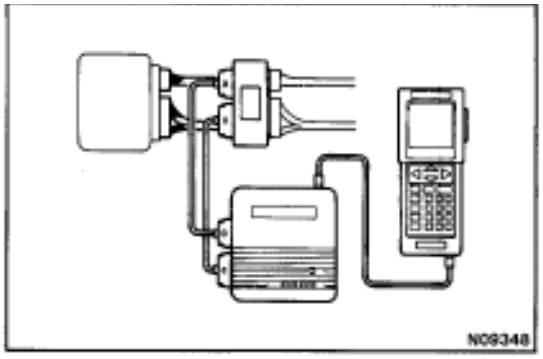

ECU TERMINAL VALUES MEASUREMENT USING TOYOTA BREAK–OUT–BOX AND TOYOTA HAND–HELD TESTER

1. Hook up the TOYOTA hand–held tester and TOYOTA break–out–box to the vehicle.
2. Read the ECU input/output values by following the prompts on the tester screen.
   HINT: TOYOTA hand–held tester has a ”Snapshot” function. This records the measured values and is effective in the diagnosis of intermittent problems.
   Please refer to the TOYOTA hand–held tester/TOYOTA break–out–box operators manual for further details.

DIAGNOSTIC TROUBLE CODE CHART

If a malfunction code is displayed during the diagnostic trouble code check, check the circuit listed for that code in the table below and proceed to the relevant page.
HINT: Using SST 09843–18020, connect the terminals Tc and E_1, and remove the short pin.

Code	ABS Warning Light Blinking Pattern	Indicator			Diagnosis	See page
		ABS Warning Light	TRAC Indicator Light	TRAC OFF Light		
11	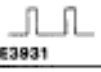 BE3931	ON	OFF	ON	Open or short in ABS solenoid relay circuit	BR–65
12	 BE3931	ON	OFF	ON	B+ short in ABS solenoid relay circuit	BR–65
13	 BE3931	ON	OFF	ON	Open or short in ABS motor relay circuit	BR–71
14	 BE3931	ON	OFF	ON	B+ short in ABS motor relay circuit	BR–71
(15)	 BE3931	ON	ON	ON	Open or short in TRAC solenoid relay circuit	BR–77
(16)	 BE3931	ON	ON	OFF	B+ short in TRAC solenoid relay circuit	BR–77
(17)	 BE3931	OFF*	ON	ON	Open or short in TRAC motor relay circuit	BR–80
(18)	 BE3931	OFF*	ON	ON	B+ short in TRAC motor relay circuit	BR–80
21	 BE3932	ON	OFF	ON	Open or short in ABS actuator solenoid circuit (SFR circuit)	BR–83
22	 BE3932	ON	OFF	ON	Open or short in ABS actuator solenoid circuit (SFL circuit)	BR–83
23	 BE3932	ON	OFF	ON	Open or short in ABS actuator solenoid circuit (SRR circuit)	BR–83
24	 BE3932	ON	OFF	ON	Open or short in ABS actuator solenoid circuit (SRL circuit)	BR–83
(25)	 BE3932	ON	ON	ON	Open or short in TRAC actuator solenoid circuit (SMC circuit)	BR–86
(27)	 BE3932	ON	ON	ON	Open or short in TRAC actuator solenoid circuit (SRC circuit)	BR–86
31	 BE3933	ON	OFF	ON	Right front wheel speed sensor signal malfunction	BR–88
32	 BE3933	ON	OFF	ON	Left front wheel speed sensor signal malfunction	BR–88
33	 BE3933	ON	OFF	ON	Right rear wheel speed sensor signal malfunction	BR–88
34	 BE3933	ON	OFF	ON	Left rear wheel speed sensor signal malfunction	BR–88

Code	ABS Warning Light Blinking Pattern	Indicator			Diagnosis	See page
		ABS Warning Light	TRAC Indicator Light	TRAC OFF Light		
35	 BE3933	ON	OFF	ON	Open circuit in left front or right rear speed sensor circuit	BR–88.
36	 BE3933	ON	OFF	ON	Open circuit in right front or left rear speed sensor circuit	BR–88
41	 BE3934	ON	OFF	ON	Low battery positive voltage or abnormally high battery positive voltage	BR–92
44	 BE3934	ON	OFF	OFF	Open or short in lateral acceleration sensor circuit	BR–95
51	 BE3935	ON	OFF	ON	ABS pump motor is locked Open in ABS pump motor ground	BR–97
(55)	 BE3935	OFF*	ON	ON	Brake fluid reservoir level low	BR–98
(58)	 BE3935	OFF*	ON	ON	Open circuit in TRAC pump motor circuit	BR–100
(61)	 BE3936	OFF*	ON	ON	TRAC ECU communication abnormal	BR–102
(62)	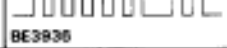 BE3936	OFF*	ON	ON	Wheel speed sensor signal malfunction	BR–104
Always ON		ON	ON	ON	Malfunction in ABS (& TRAC) ECU	—

: Only vehicles with TRAC

*: When a malfunction causing code No. 17, 18, 55, 58, 61 or 62 is detected, the ABS warning light does not light up, but the TRAC indicator light does. However, when checking the DTC, check the blinking pattern of the ABS warning light.

PARTS LOCATION

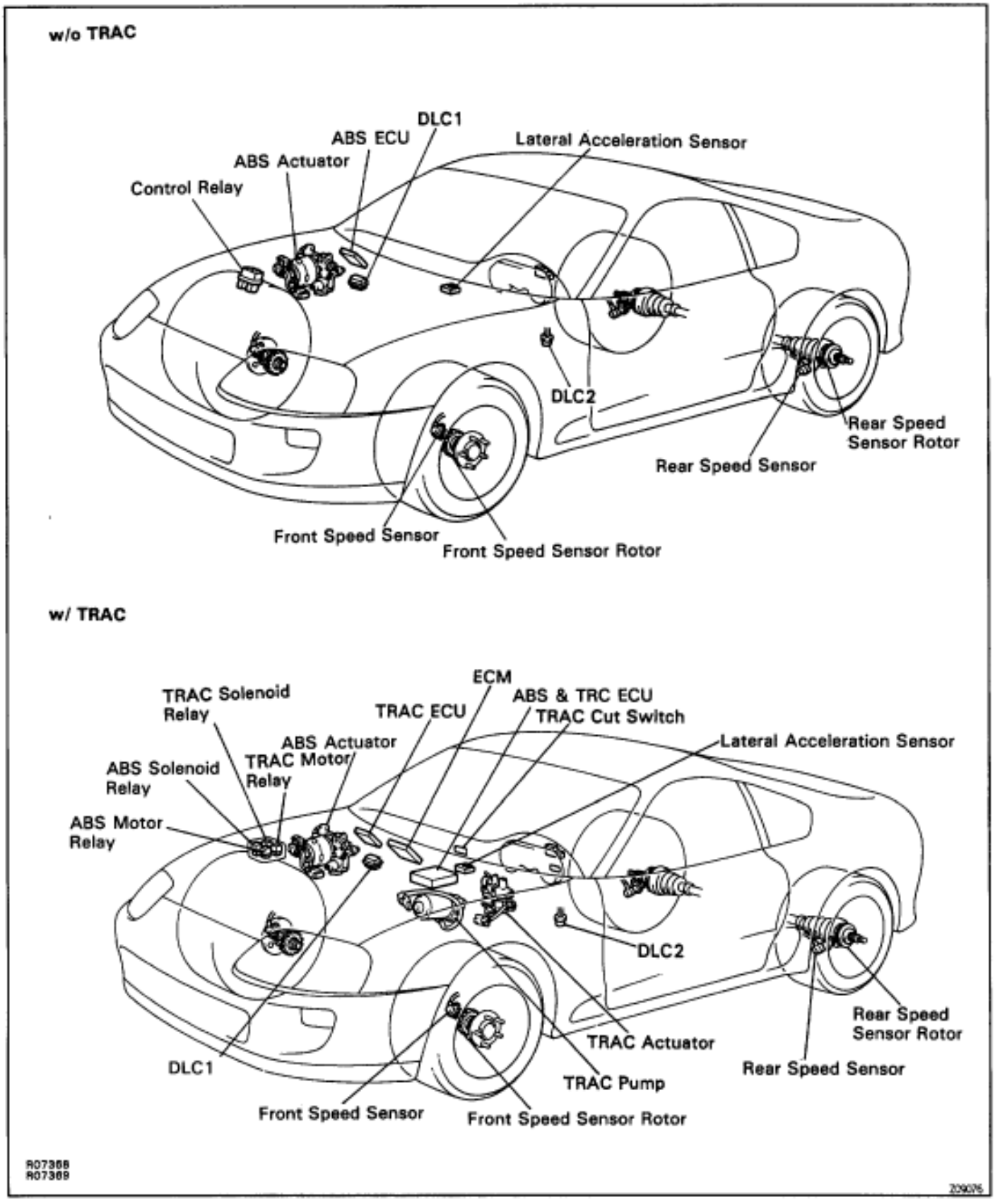

ECU TERMINALS STANDARD VALUE
w/o TRAC:

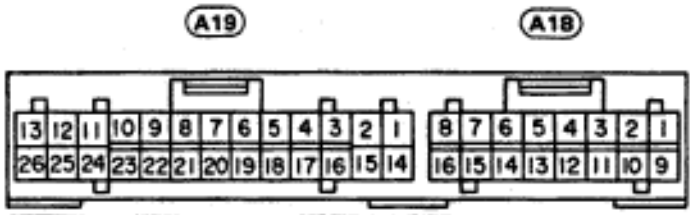

RO6396

Symbols (Terminals No.)			STD Voltage (V)	Condition
BAT (A19–25)	–	GND (A19–15)	10 – 14	Always
IG 1 (A19–12)	–	GND (A19–2)	10 – 14	IG switch ON
SR (A19–11)	–	R– (A19–24)	9 – 14	IG switch ON, ABS warning light OFF
MR (A19–23)	–	R– (A19–24)	Below 1.0	IG switch ON
SFR (A19–1)	–	GND (A19–2)	10 – 14	IG switch ON, ABS warning light OFF
SFL (A19–13)	–	GND (A19–2)	10 – 14	IG switch ON, ABS warning light OFF
SRR (A19–26)	–	GND (A19–15)	10 – 14	IG switch ON, ABS warning light OFF
SRL (A19–14)	–	GND (A19–15)	10 – 14	IG switch ON, ABS warning light OFF
AST (A19–18)	–	GND (A19–15)	10 – 14	IG switch ON, ABS warning light OFF
WA (A18–13)	–	GND (A19–15)	Below 2.0	IG switch ON, ABS warning light ON
			10 – 14	IG switch ON, ABS warning light OFF
PKB (A18–14)	–	GND (A19–15)	Below 1.5	IG switch ON, PKB switch ON
			10 – 14	IG switch ON, PKB switch OFF
STP (A18–6)	–	GND (A19–2)	Below 1.5	Stop light switch OFF
			10 – 14	Stop light switch ON
D/G (A18–4)	–	GND (A19–2)	10 – 14	IG switch ON, ABS warning light OFF
Tc (A19–5)	–	GND (A19–2)	10 – 14	IG switch ON
Ts (A18–15)	–	GND (A19–15)	10 – 14	IG switch ON
FR + (A19–16)	–	FR– (A19–3)	AC generation	IG switch ON Slowly turn right front wheel
FL + (A19–9)	–	FL– (A19–22)	AC generation	IG switch ON Slowly turn left front wheel
RR + (A18–8)	–	RR– (A18–16)	AC generation	IG switch ON Slowly turn left rear wheel
RL + (A18–9)	–	RL– (A18–1)	AC generation	IG switch ON Slowly turn left rear wheel
GS 1 (A18–12)	–	GND (A19–15)	4 – 6 or 7 –11	IG switch ON, Vehicle parked on a level surface
GS 2 (A18–3)	–	GND (A19–2)	4 – 6	IG switch ON, Vehicle parked on a level surface

w/ TRAC:

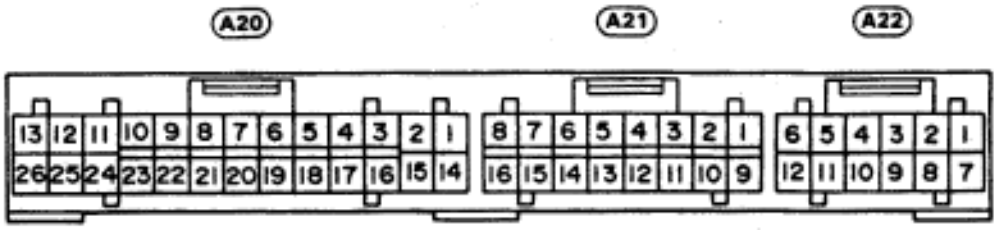

RD5698

Symbols (Terminals No.)	STD Voltage (V)	Condition
BAT (A20–7) – GND (A20–25)	10 –14	Always
IG 1 (A20–24) – GND (A20–25)	10 –14	IG switch ON
SR (A20–15) – R– (A20–12)	8.3 –14	IG switch ON, ABS warning light OFF
MR (A20–2) – R– (A20–12)	Below 1.0	IG switch ON
TSR (A20–1) – R– (A20–12)	8.3 –14	IG switch ON, TRAC and TRAC OFF indicator light OFF
TMR (A20–14) – R– (A20–12)	Below 1.0	IG switch ON
SFR (A22–1) – GND (A22–9)	10 –14	IG switch ON, ABS warning light OFF
SFL (A20–13) – GND (A20–25)	10 –14	IG switch ON, ABS warning light OFF
SRR (A20–26) – GND (A20–25)	10 –14	IG switch ON, ABS warning light OFF
SRL (A22–7) – GND (A22–9)	10 –14	IG switch ON, ABS warning light OFF
AST (A20–21) – GND (A20–25)	10 –14	IG switch ON, ABS warning light OFF
SMC (A22–2) – GND (A22–9)	10 –14	IG switch ON, TRAC and TRAC OFF indicator light OFF
SRC (A22–8) – GND (A22–9)	10 –14	IG switch ON, TRAC and TRAC OFF indicator light OFF
WA (A22–5) – GND (A22–4)	Below 2.0	IG switch ON, ABS warning light ON
	10 –14	IG switch ON, ABS warning light OFF
PKB (A22–12) – GND (A22–4)	Below 1.5	IG switch ON, PKB switch ON Fluid in M/C reservoir above MIN level.
	10 –14	IG switch ON, PKB switch OFF Fluid in M/C reservoir above MIN level.
LBL (A20–10) – GND (A20–25)	10 –14	IG switch ON Fluid in M/C reservoir above MIN level.
STP (A22–6) – GND (A22–4)	Below 1.5	Stop light switch OFF
	8 –14	Stop light switch ON
D/G (A22–10) – GND (A22–9)	10 –14	IG switch ON, ABS warning light OFF

Symbols (Terminals No.)			STD Voltage (V)	Conditions
Tc (A20-23)	–	GND (A20-25)	10 –14	IG switch ON
Ts (A20-11)	–	GND (A20-25)	10 –14	IG switch ON
FR + (A20-17)	–	FR – (A20-4)	10 –14	IG switch ON Slowly turn right front wheel.
FL + (A20-5)	–	FL – (A20-18)	AC generation	IG switch ON Slowly turn left front wheel.
RR + (A21-2)	–	RR – (A21-10)	AC generation	IG switch ON Slowly turn right rear wheel.
RL + (A21-9)	–	RL – (A21-1)	AC generation	IG switch ON Slowly turn left rear wheel.
FRO (A21-13)	–	GND (A22-4)	Pulse generation	IG switch ON Slowly turn right front wheel.
FLO (A21-15)	–	GND (A22-4)	Pulse generation	IG switch ON Slowly turn left front wheel.
RRO (A21-6)	–	GND (A22-4)	Pulse generation	IG switch ON Slowly turn right rear wheel.
RLO (A21-4)	–	GND (A22-4)	Pulse generation	IG switch ON Slowly turn left rear wheel.
GS 1 (A20-8)	–	GND (A20-25)	4 – 6 or 7 – 11	IG switch ON, Vehicle parked on a level surface
GS 2 (A20-20)	–	GND (A20-25)	4 –6	IG switch ON, Vehicle parked on a level surface
EXO (A21-12)	–	GND (A22-4)	10 –14	IG switch ON

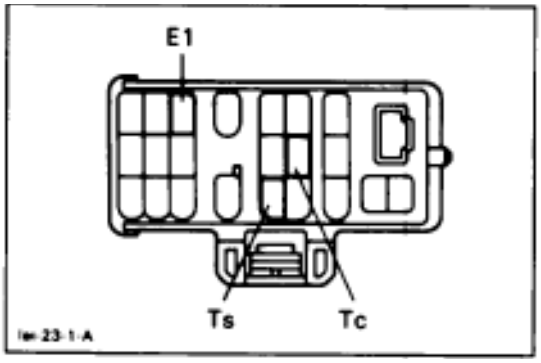

SPEED SENSOR SIGNAL CHECK

1. Turn the ignition switch OFF
2. Using SST, connect terminals Ts and E1 of DLC1.
   SST 09843–18020
3. Start the engine.

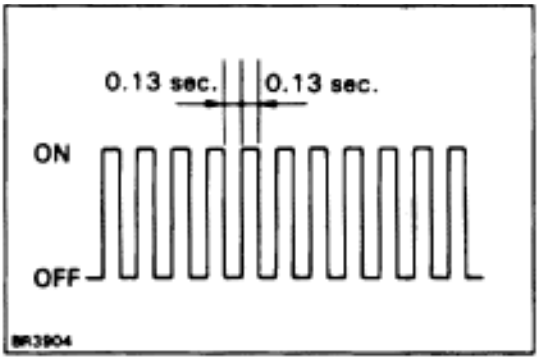

4. Check that the ABS warning light blinks.
   HINT:
   - If the ABS warning light does not blink, inspect the ABS warning light circuit (See page BR–107).
   - If the ABS warning light is always on, inspect and repair the IG1 terminal of lateral acceleration sensor.
5. Drive the vehicle faster than 45 km/h (28 mph) for several seconds.
6. Stop the vehicle.
7. Using SST, connect terminals Tc and E1 of DLC1.
   SST 09843–18020
8. Read the number of blinks of the ABS warning light.
   HINT: See the list of diagnostic trouble codes shown on the next page.
   If every sensor is normal, a normal code is output (A cycle of 0.25 sec. ON and 0.25 sec. OFF is repeated).

   If 2 or more malfunctions are indicated at the same time, the lowest numbered code will be displayed first.

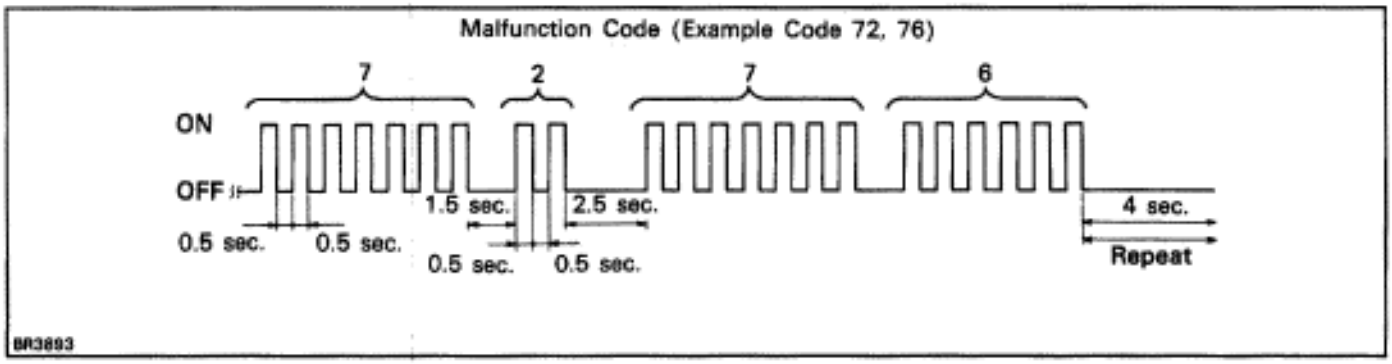

9. After doing the check, disconnect terminals Ts and E1, Tc and E1 of DLC1, and turn ignition switch OFF.

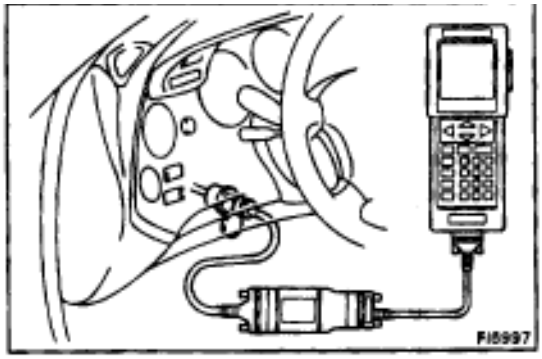

ECU DATA MONITOR USING TOYOTA HAND–HELD TESTER

1. Hook up the TOYOTA hand–held tester to the DLC2.
2. Monitor the ECU data by following the prompts on the tester screen.
   HINT: TOYOTA hand–held tester has a ”Snapshot” function which records the monitored data.
   Please refer to the TOYOTA hand–held tester operator’s manual for further details.

Diagnostic Trouble Code of Speed Sensor Check Function

Code No.	Diagnosis	Trouble Area
71	Low output voltage of right front speed sensor	Right front speed sensor Sensor installation
72	Low output voltage of left front speed sensor	Left front speed sensor Sensor installation
73	Low output voltage of right rear speed sensor	Right rear speed sensor Sensor installation
74	Low output voltage of left rear speed sensor	Left rear speed sensor Sensor installation
75	Abnormal change in output voltage of right front speed sensor	Right front speed sensor rotor
76	Abnormal change in output voltage of left front speed sensor	Left front speed sensor rotor
77	Abnormal change in output voltage of right rear speed sensor	Right rear speed sensor rotor
78	Abnormal change in output voltage of left rear speed sensor	Left rear speed sensor rotor

PROBLEM SYMPTOMS CHART

If a normal code is displayed during the diagnostic trouble code check but the problem still occurs, check the circuits for each problem symptom in the order given in the table below and proceed to the relevant troubleshooting page.

Symptoms	Inspection Circuit	See page
ABS does not operate.	Only when 1. ~ 4. are all normal and the problem is still occurring, replace the ABS (& TRAC) ECU. 1. Check the diagnostic trouble code, reconfirming that the normal code is output. 2. IG power source circuit. 3. Speed sensor circuit. 4. Check the ABS actuator with a checker. If abnormal, check the hydraulic circuit for leakage (See page BR–115).	**BR–54** **BR–92** **BR–88** **BR–44**
ABS does not operate efficiently	Only when 1. ~ 4. Are all normal and the problem is still occurring, replace the ABS (& TRAC) ECU. 1. Check the diagnostic trouble code, reconfirming that the normal code is output. 2. Speed sensor circuit. 3. Stop light switch circuit. 4. Check the ABS actuator with a checker. If abnormal, check the hydraulic circuit for leakage (See page BR–115).	**BR–54** **BR–88** **BR–105** **BR–44**
ABS warning light abnormal	1. ABS warning light circuit. 2. ABS (& TRAC) ECU.	**BR–107**
Diagnostic trouble code check cannot be performed	Only when 1 and 2 are all normal and the problem is still occurring, replace the ABS (& TRAC) ECU. 1. ABS warning light circuit. 2. Tc terminal circuit.	**BR–107** **BR–112**
Speed sensor signal check cannot be performed	1. Ts terminal circuit. 2. ABS (& TRAC) ECU.	**BR–114**

CIRCUIT INSPECTION

DTC 11 12 ABS Solenoid Relay Circuit

CIRCUIT DESCRIPTION

This relay supplies power to each ABS solenoid. After the ignition switch is turned ON, if the initial check is OK, the relay goes on.

DTC No.	Diagnostic Trouble Code Detecting Condition	Trouble area
11	Conditions (1) and (2) continue for 0.2 sec. or more: (1) ABS solenoid relay terminal (SR) voltage: Battery positive voltage (2) Solenoid relay monitor terminal (AST) voltage: O V	ABS solenoid relay Open or short in ABS solenoid relay circuit ECU
12	Conditions (1) and (2) continue for 0.2 sec. or more: (1) ABS solenoid relay terminal (SR) voltage: O V (2) Solenoid relay monitor terminal (AST) voltage: Battery positive voltage	ABS solenoid relay B+ short in ABS solenoid relay circuit ECU

Fail safe function: If trouble occurs in the solenoid relay circuit, the ECU cuts off current to the solenoid relay and prohibits ABS control.

WIRING DIAGRAM

w/o TRAC

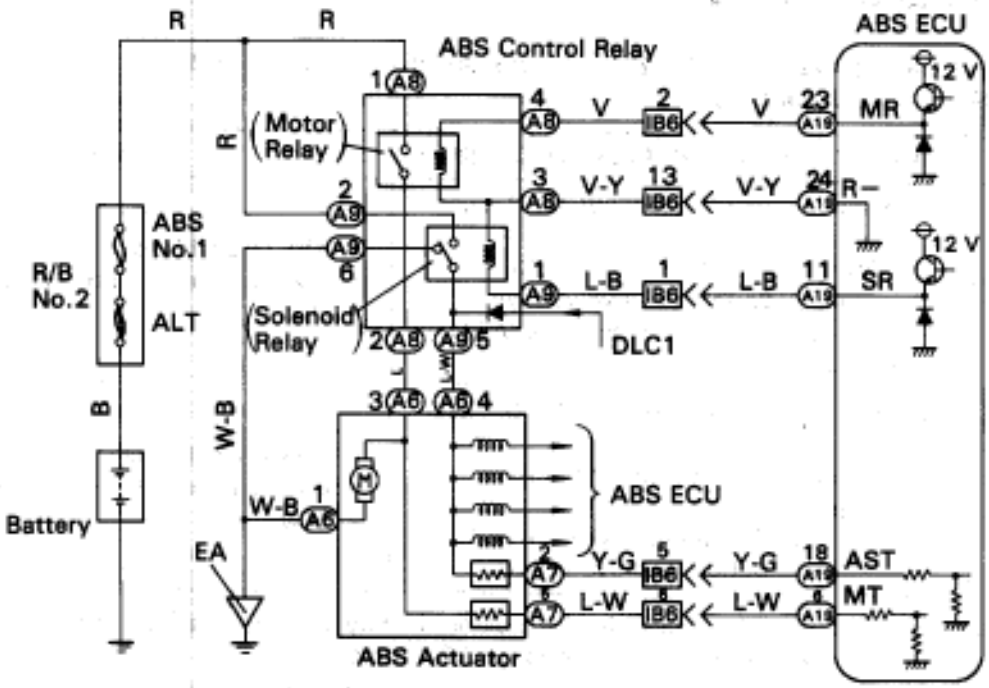

w/ TRAC

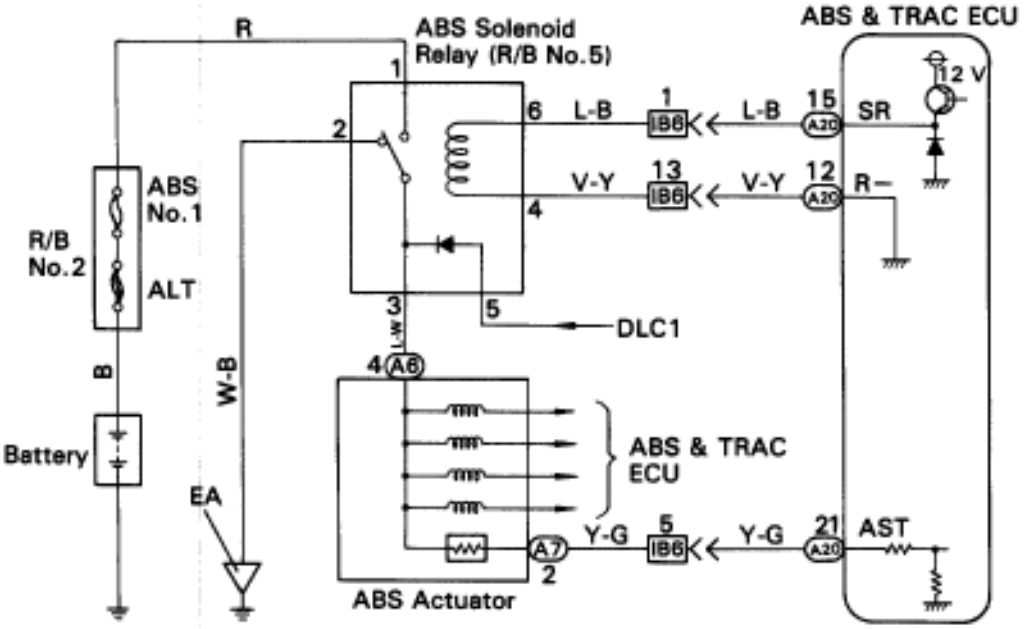

R07066
R07067

INSPECTION PROCEDURE (w/o TRAC)

1 Check voltage between terminals (A9) 2 and (A9) 6 of ABS solenoid relay connector.

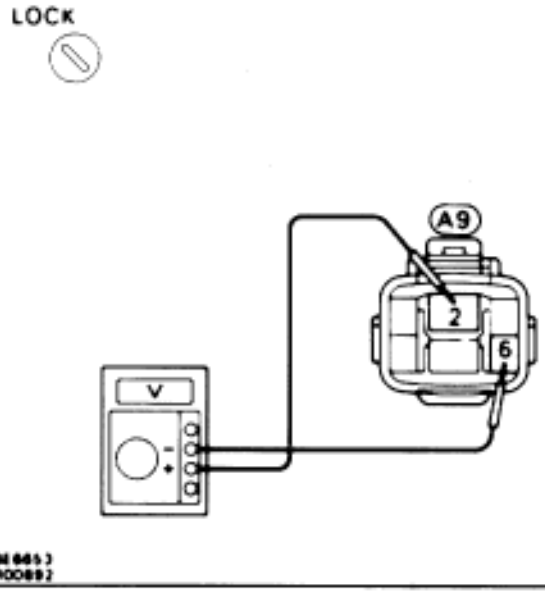

P Disconnect the ABS solenoid relay connector.

C Measure voltage between terminals (A9) 2 and (A9) 6 of ABS solenoid relay harness side connector.

OK **Voltage: 10 — 14 V**

OK

NG **Check and repair harness or connector.**

2 Check continuity between terminal (A9) 5 OF ABS solenoid relay connector and terminal (A19) 18 of ABS ECU.

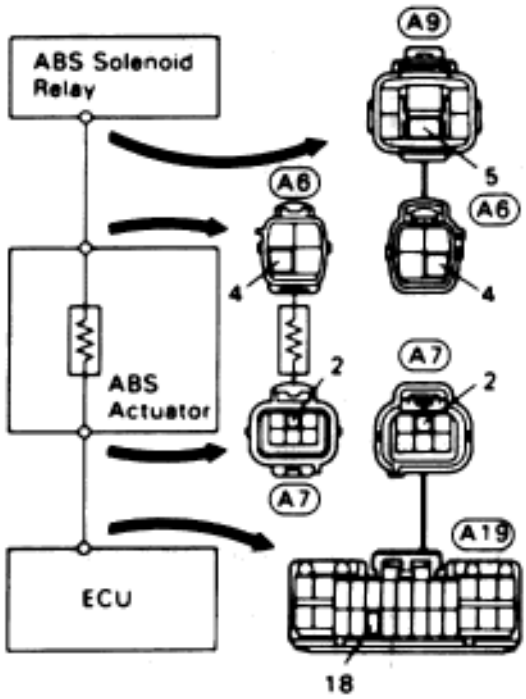

P Disconnect the connectors from ABS actuator.

C Check continuity between terminal (A9) 5 of ABS solenoid relay connector and terminal (A19) 18 of ABS ECU.

OK **Continuity.**

Hint There is a resistance of 4 ~ 6 between terminals (A6) 4 and (A7) 2 of ABS actuator.

OK

NG **Repair or replace harness or ABS actuator.**

3 Check ABS solenoid relay.

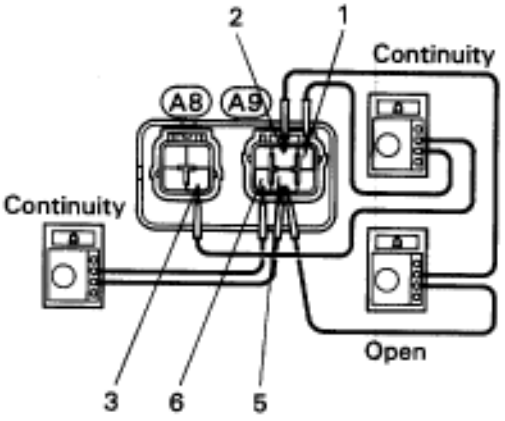

C Check continuity between each terminal of ABS solenoid relay shown below.

OK

Terminals A9 1 and A8 3	Continuity (Reference value 80)
Terminals A9 5 and A9 6	Continuity
Terminals A9 2 and A9 5	Open

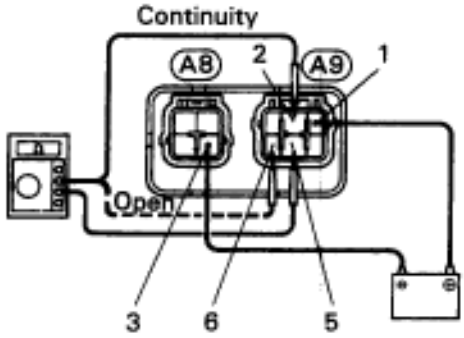

C (1) Apply battery voltage between terminals (A9) 1 and (A8) 3.
(2) Check continuity between each terminal of ABS solenoid relay shown below.

OK

Terminals A9 5 and A9 6	Open
Terminals A9 2 and A9 5	Continuity

RC0889
RC0895

OK → NG → **Replace ABS control relay.**

4 Check for open and short in harness and connector between ABS solenoid relay and ABS ECU (See page IN–30).

OK → NG → **Repair or replace harness or connector.**

If the same code is still output after the diagnostic trouble code is deleted, check the contact condition of each connection.
If the connections are normal, the ECU may be defective.

INSPECTION PROCEDURE (w/ TRAC)

1 Check voltage between terminals 1 and 2 of R/B No. 5 (for ABS solenoid relay).

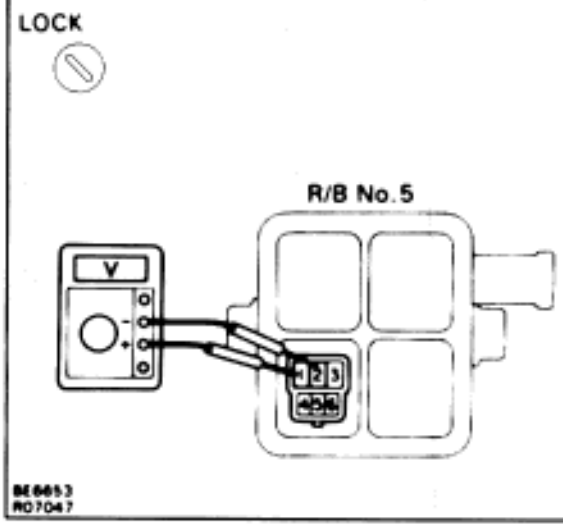

P Remove ABS solenoid relay from R/B No. 5.

C Measure voltage between terminals 1 and 2 of R/B No. 5 (for ABS solenoid relay).

OK **Voltage: 10 — 14 V**

OK

NG **Check and repair harness or connector.**

2 Check continuity between terminal 3 of R/B No.5 (for ABS solenoid relay) and terminal (A20) 21 of ABS & TRAC ECU.

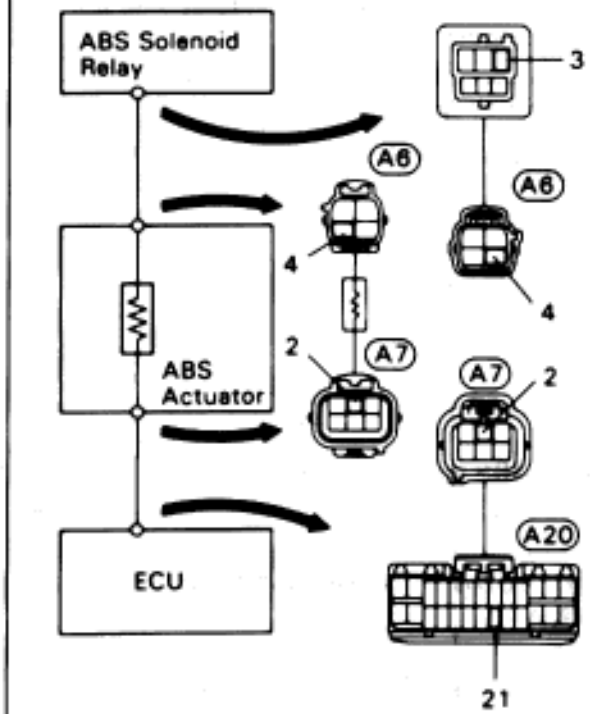

C Check continuity between terminal 3 of R/B No.5 (for ABS solenoid relay) and terminal (A20) 21 OF ABS & TRAC ECU.

OK **Continuity**

HINT: There is a resistance of 4 ~ 6 between terminals (A6) 4 and (A7) 2 of ABS actuator.

OK

NG **Repair or replace harness or ABS connector.**

3 Check ABS solenoid relay.

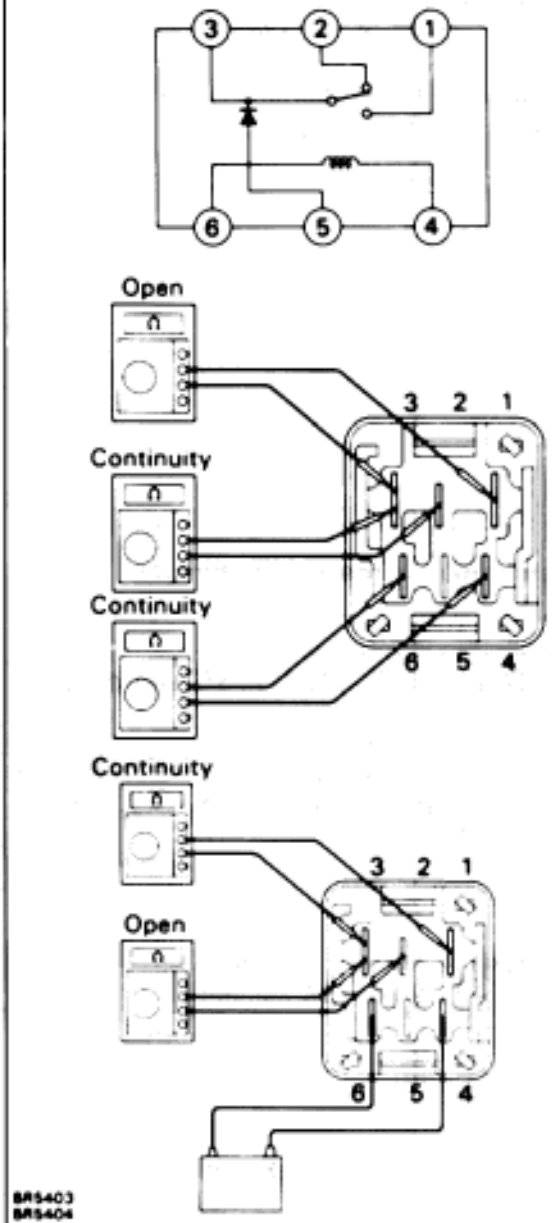

P Remove solenoid relay from R/B No. 5.

C Check continuity between each terminal of ABS solenoid relay shown below.

OK

Terminals 4 and 6	Continuity (Reference value 80)
Terminals 2 and 3	Continuity
Terminals 1 and 3	Open

C
1. Apply battery voltage between terminals 4 and 6.
2. Check continuity between each terminal of ABS solenoid relay shown below.

OK

Terminals 2 and 3	Open
Terminals 1 and 3	Continuity

OK

NG → **Replace ABS solenoid relay.**

4 Check for open and short in harness and connector between ABS solenoid relay and ABS & TRAC ECU (See page IN–30).

OK

NG → **Repair or replace harness or connector.**

If the same code is still output after the diagnostic trouble code is deleted, check the contact condition of each connection.
If the connections are normal, the ECU may be defective.

DTC 13 14 ABS Motor Relay Circuit

CIRCUIT DESCRIPTION

The ABS motor relay supplies power to the ABS pump motor. While the ABS is activated, the ECU switches the motor relay ON and operates the ABS pump motor.

DTC No.	Diagnostic Trouble Code Detecting Condition	Trouble area
13	Conditions (1) and (2) continue for 0.2 sec. or more: (1) ABS motor relay terminal (MR) voltage: Battery positive voltage (2) Motor relay monitor terminal (MT) voltage: O V	ABS motor relay Open or short in ABS motor relay circuit ECU
14	Conditions (1) and (2) continue for 4 sec. or more: (1) ABS motor relay terminal (MR) voltage: O V (2) Motor relay monitor terminal (MT) voltage: Battery positive voltage	ABS motor relay B+ short in ABS motor relay circuit ECU

Fail safe function: If trouble occurs in the motor relay circuit, the ECU cuts off the current to the solenoid relay and prohibits ABS control.

WIRING DIAGRAM

w/o TRAC

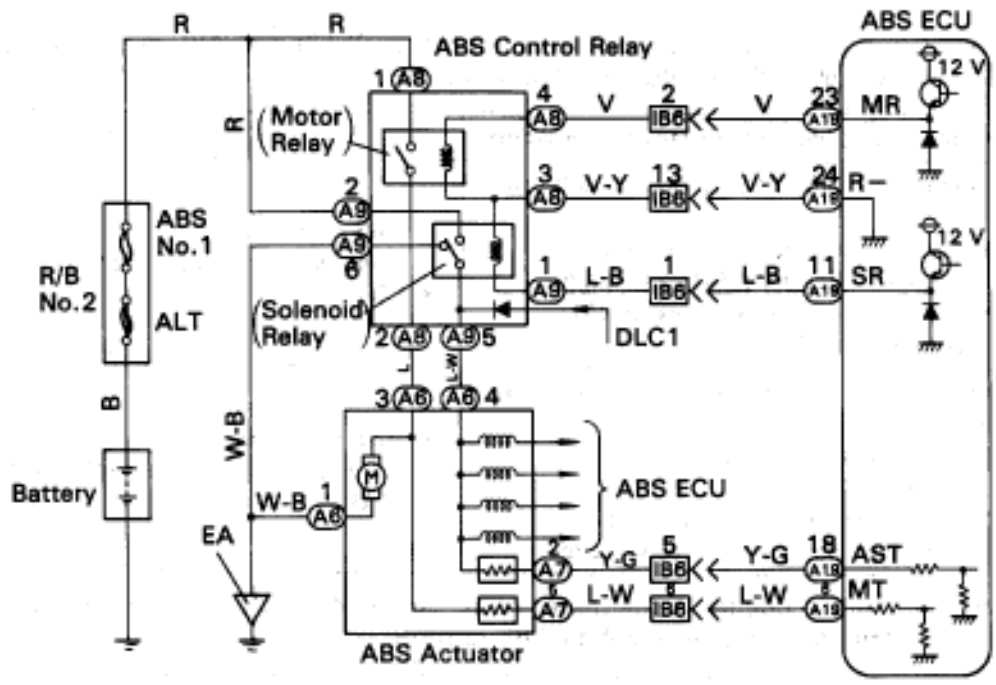

w/ TRAC

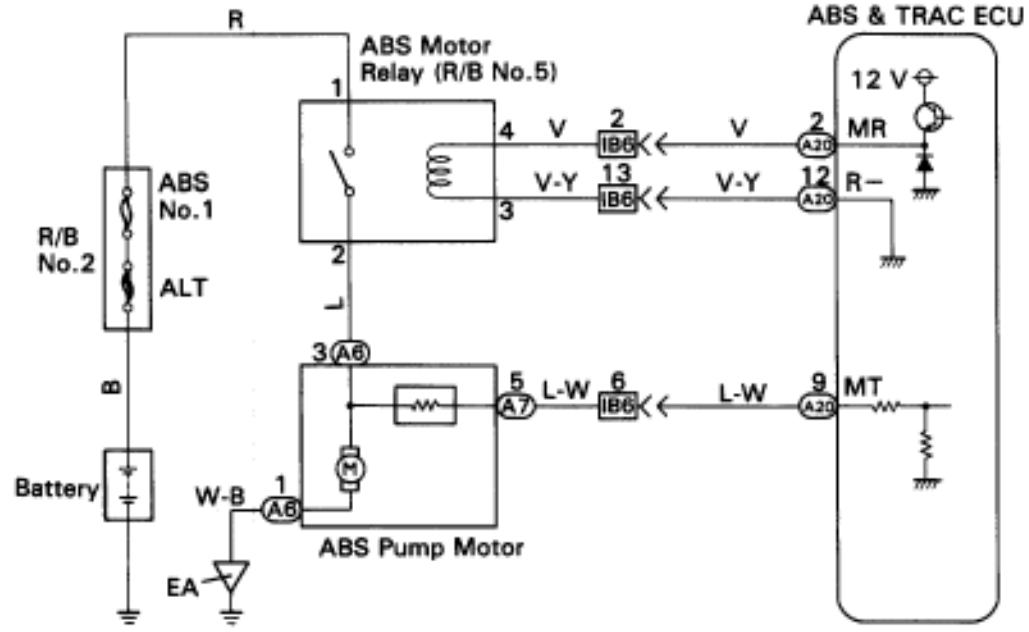

RO7056
RO7058

INSPECTION PROCEDURE (w/o TRAC)

1 Check voltage between terminal (A8) 1 of ABS motor relay connector and body ground.

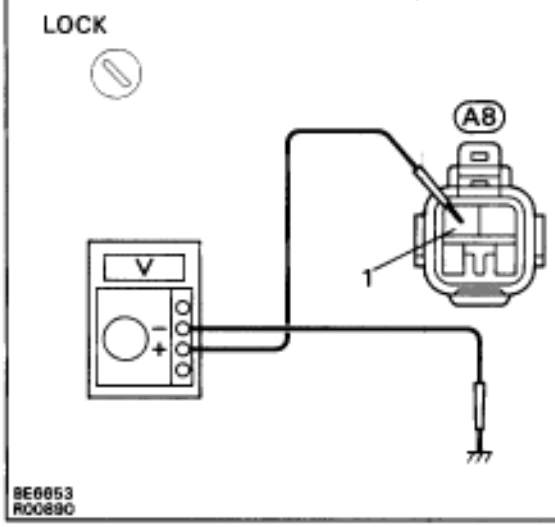

P Disconnect the ABS motor relay connector.

C Measure voltage between terminal (A8) 1 of ABS motor relay connector and body ground.

OK **Voltage: 10 — 14 V**

OK

NG → **Check and repair harness or connector.**

2 Check continuity between terminal (A8) 2 of ABS motor relay connector and terminal (A19) 6 of ABS ECU.

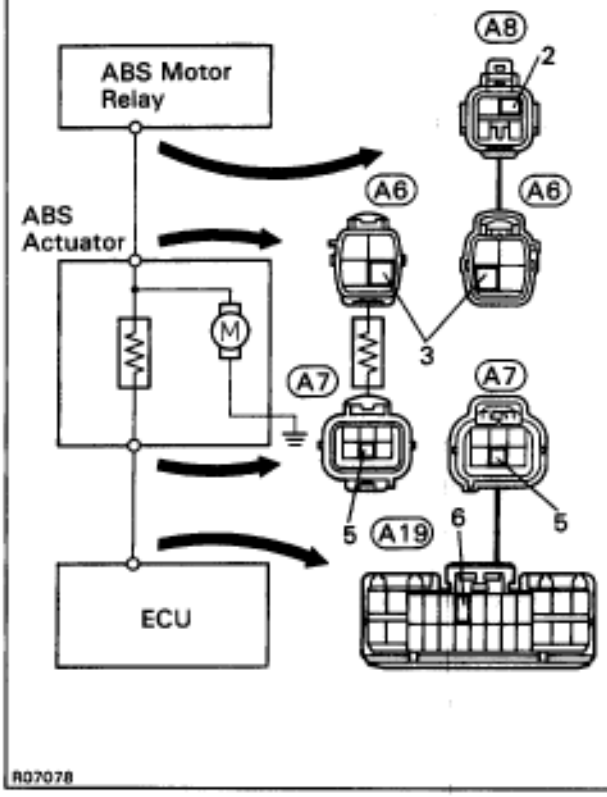

P Disconnect the connectors from the ABS actuator.

C Check continuity between terminal (A8) 2 of ABS motor relay connector and terminal (A19) 6 of ABS ECU.

OK **Continuity**

Hint There is a resistance of 4 ~ 6 between terminals (A6) 3 and (A7) 5 of ABS actuator.

OK

NG → **Repair or replace harness or ABS actuator.**

3 Check ABS motor relay.

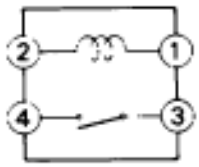

C Check continuity between each terminal of ABS motor relay shown below.

OK

Terminals (A8) 3 and (A8) 4	Continuity (Reference value 62)
Terminals (A8) 1 and (A8) 2	Open

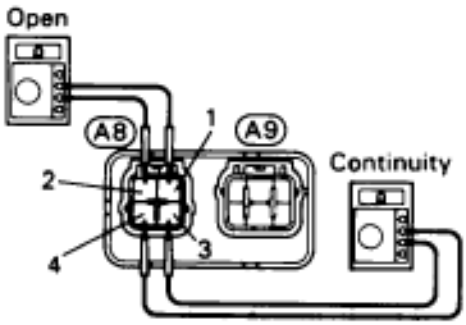

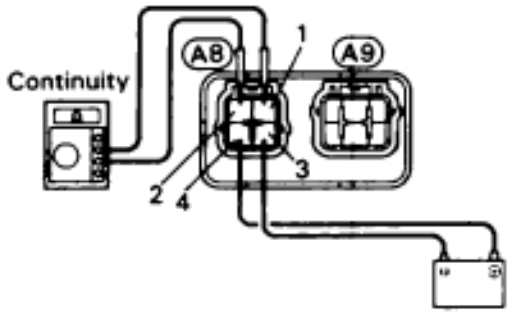

C
(1) Apply battery voltage between terminals (A8) 3 and (A8) 4.
(2) Check continuity between each terminal of ABS motor relay shown below.

OK

Terminals (A8) 1 and (A8) 2	Continuity

BE1840
R00894
R00893

OK

NG → **Replace ABS control relay.**

4 Check for open and short in harness and connector between ABS motor relay and ABS ECU (See page IN–30).

OK

NG → **Repair or replace harness or connector.**

If the same code is still output after the diagnostic trouble code is deleted, check the contact condition of each connection.
If the connections are normal, the ECU may be defective.

INSPECTION PROCEDURE (w/ TRAC)

1 Check voltage between terminal 1 of R/B No. 5 (for ABS motor relay) and body ground.

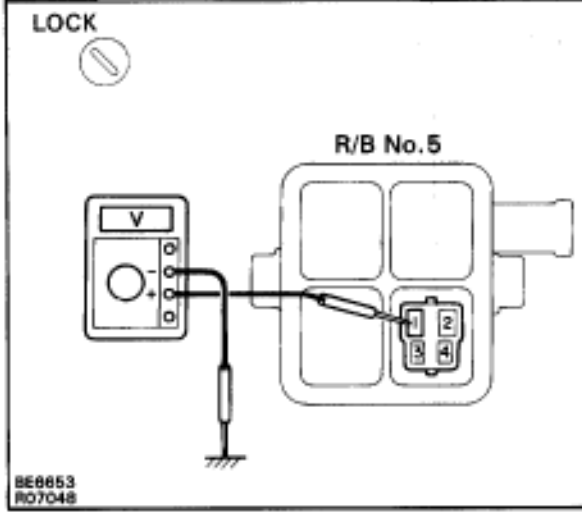

P Remove ABS motor relay from R/B No. 5.

C Measure voltage between terminal 1 of R/B No. 5 (for ABS motor relay) and body ground.

OK **Voltage: 10 — 14 V**

OK

NG → **Check and repair harness or connector.**

2 Check continuity between terminal 2 of R/B No.5 (for ABS motor relay) and terminal (A20) 9 of ABS & TRAC ECU.

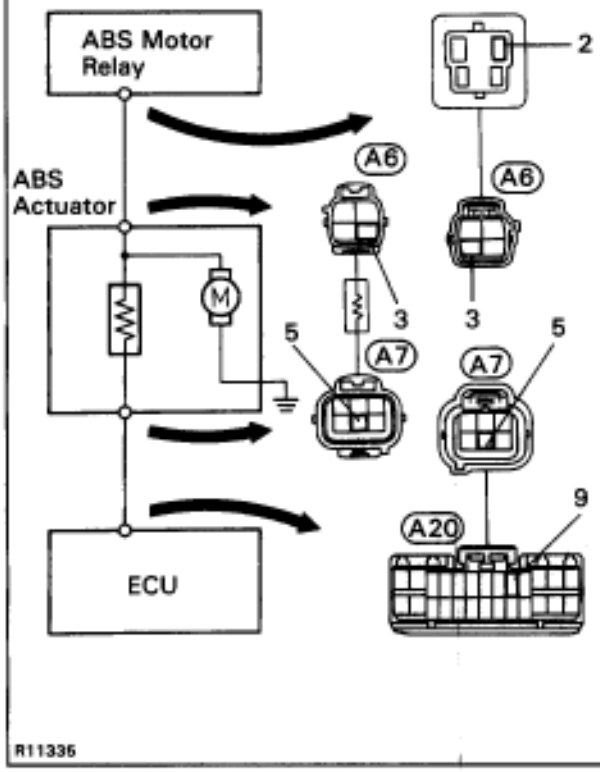

C Check continuity between terminal 2 of R/B No.5 (for ABS motor relay) and terminal (A20) 9 of ABS & TRAC ECU.

OK **Continuity**

HINT: There is a resistance of 4 ~ 6 Ω between terminals (A6) 3 and (A7) 5 of ABS actuator.

OK

NG → **Repair or replace harness or ABS actuator.**

3 Check ABS motor relay.

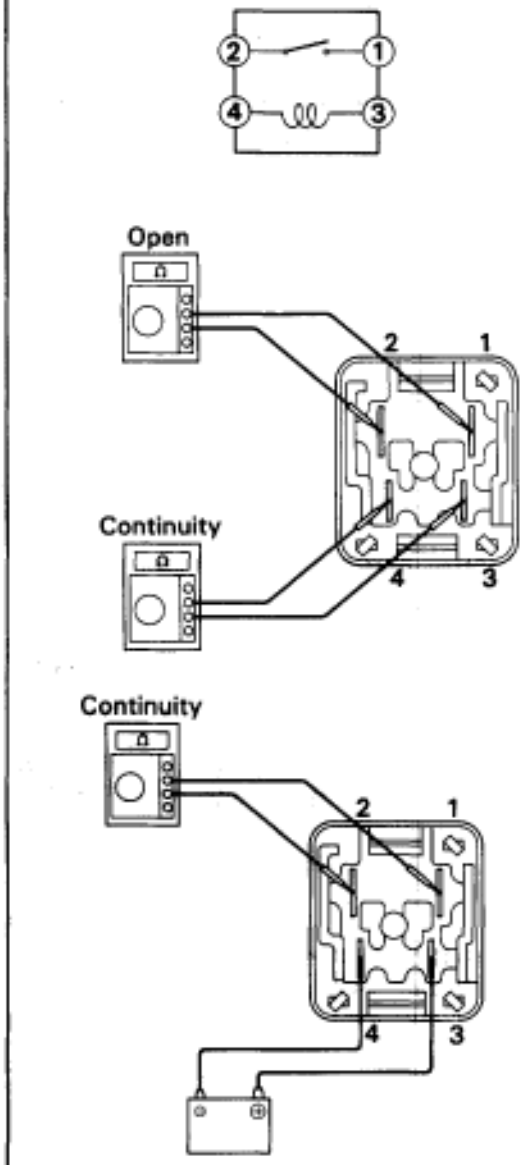

P Remove motor relay from R/B No. 5.

C Check continuity between each pair of terminals of motor relay shown below.

OK

Terminals 3 and 4	Continuity (Reference value 62 Ω)
Terminals 1 and 2	Open

C
1. Apply battery voltage between terminals 3 and 4.
2. Check continuity between each terminal shown below.

OK

Terminals 1 and 2	Continuity

OK

NG → Replace ABS motor relay.

4 Check for open and short in harness and connector between ABS motor relay and ABS TRAC ECU (See page IN–30).

OK

NG → Repair or replace harness or connector.

If the same code is still output after the diagnostic trouble code is deleted, check the contact condition of each connection.
If the connections are normal, the ECU may be defective.

DTC 15 16 TRAC Solenoid Relay Circuit

CIRCUIT DESCRIPTION

This relay circuit supplies power to each traction actuator solenoid.
When the ignition switch is turned ON, the relay goes on.

DTC No.	Diagnostic Trouble Code Detecting Condition	Trouble area
15	Conditions (1) through (3) continue for 0.2 sec. or more: (1) TRAC solenoid relay terminal (TSR) voltage: Battery positive voltage (2) All TRAC actuator solenoids: OFF (3) All TRAC actuator solenoid monitor voltages (in ECU): 0 V	TRAC solenoid relay Open or short in TRAC solenoid relay circuit ECU
16	Conditions (1) through (3) continue for 0.2 sec. or more: (1) TRAC solenoid relay terminal (TSR) voltage: 0 V (2) All TRAC actuator solenoids: OFF (3) TRAC actuator solenoid monitor voltage (in ECU): Battery positive voltage	TRAC solenoid relay B+ short in TRAC solenoid relay circuit ECU

Fail safe function: If trouble occurs in this relay circuit, the ECU cuts off current to the ABS and TRAC solenoid relays and prohibits ABS and TRAC control.

WIRING DIAGRAM

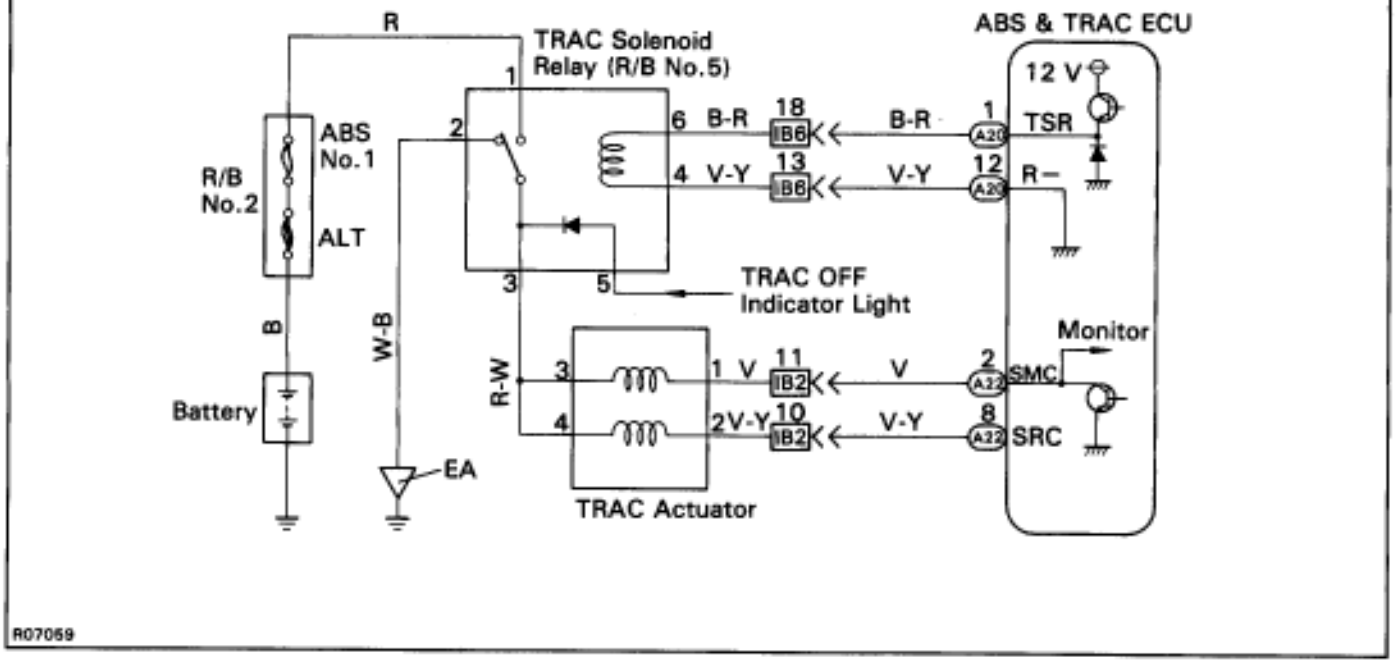

INSPECTION PROCEDURE

1 Check voltage between terminals 1 and 2 of R/B No. 5 (for TRAC solenoid relay).

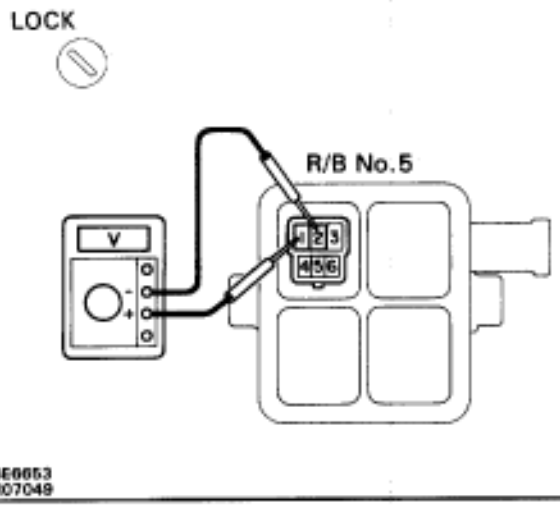

P Remove TRAC solenoid relay from R/B No. 5.

C Measure voltage between terminals 1 and 2 of R/B No. 5 (for TRAC Solenoid relay).

OK **Voltage 10 — 14 V**

OK

NG **Repair or replace harness or connector.**

2 Check continuity between terminal 3 of R/B No.5 (for TRAC solenoid relay) and terminals (A22) 2 and (A22) 8 of ABS & TRAC ECU.

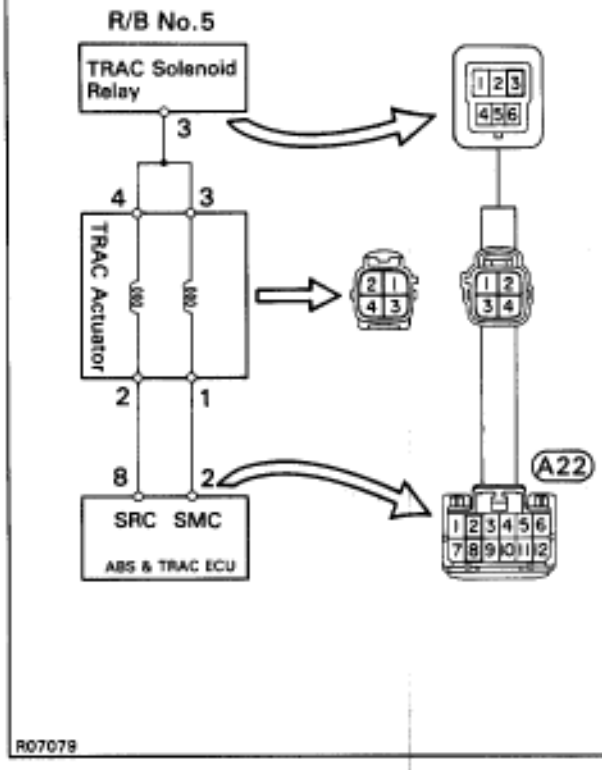

C Check continuity between terminal 3 of R/B No.5 (for TRAC solenoid relay) and terminals (A22) 2 and (A22) 8 of ABS & TRAC ECU.

OK **Continuity**

HINT: Resistance of the TRAC actuator solenoid is 2

OK

NG **Repair or replace harness or TRAC actuator.**

3 Check TRAC solenoid relay.

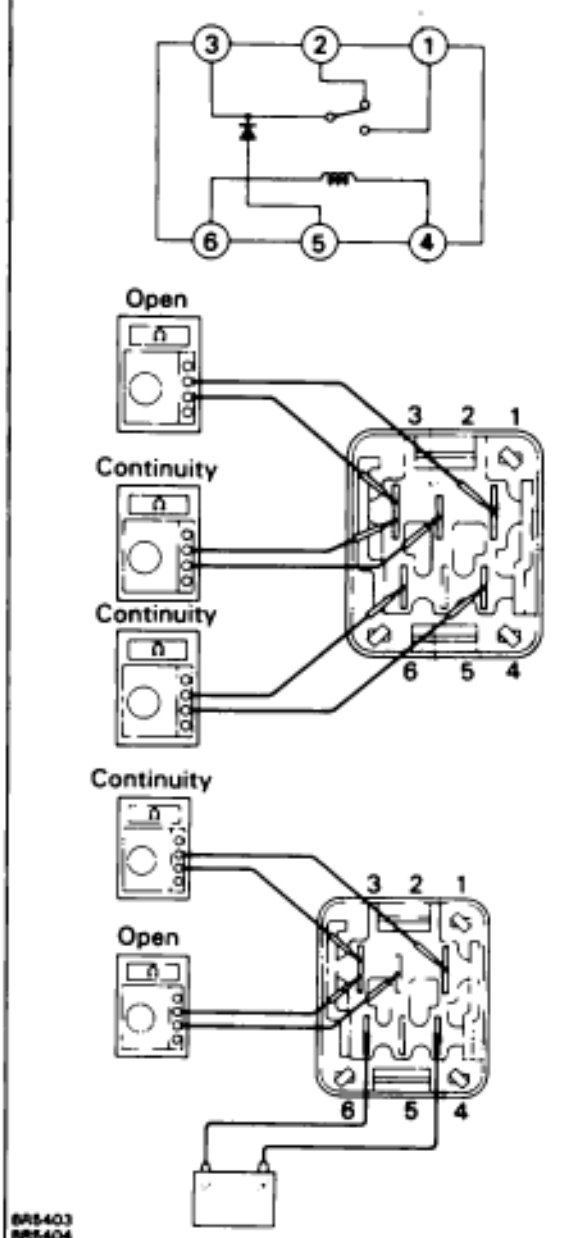

P Remove TRAC solenoid relay from R/B No. 5.

C Check continuity between each terminal of TRAC solenoid relay shown below.

OK

Terminals 4 and 6	Continuity (Reference value 80)
Terminals 2 and 3	Continuity
Terminals 1 and 3	Open

C
1. Apply battery voltage between terminals 4 and 6.
2. Check continuity between terminal shown below.

OK

Terminals 2 and 3	Open
Terminals 1 and 3	Continuity

OK

NG → **Replace TRAC solenoid relay.**

4 Check for open and short in harness and connector between TRAC solenoid relay and ABS & TRAC ECU (See page IN–30).

OK

NG → **Repair or replace harness or connector.**

If the same code is still output after the diagnostic trouble code is deleted, check the contact condition of each connection.
If the connections are normal, the ECU may be defective.

DTC 17 18 TRAC Motor Relay Circuit

CIRCUIT DESCRIPTION

This relay circuit supplies power to the TRAC pump motor. While the TRAC is activated, the ECU switches the motor relay ON and operates the TRAC pump motor.

DTC No.	Diagnostic Trouble Code Detecting Condition	Trouble area
17	Conditions (1) and (2) continue for 0.2 sec. or more: (1) TRAC motor relay terminal (TMR) voltage: Battery positive voltage (2) Voltage of ABS & TRAC ECU terminal MTT: 0 V	TRAC motor relay Open or short in TRAC motor relay circuit ECU
18	Conditions (1) and (2) continue for 2 sec. or more: (1) TRAC motor relay terminal (TMR) voltage: 0 V (2) Voltage of ABS & TRAC ECU terminal MTT: Battery positive voltage	TRAC motor relay B+ short in TRAC motor relay circuit ECU

Fail safe function: If trouble occurs in this relay circuit, the ECU cuts off current to the TRAC solenoid relay and prohibits TRAC control.

WIRING DIAGRAM

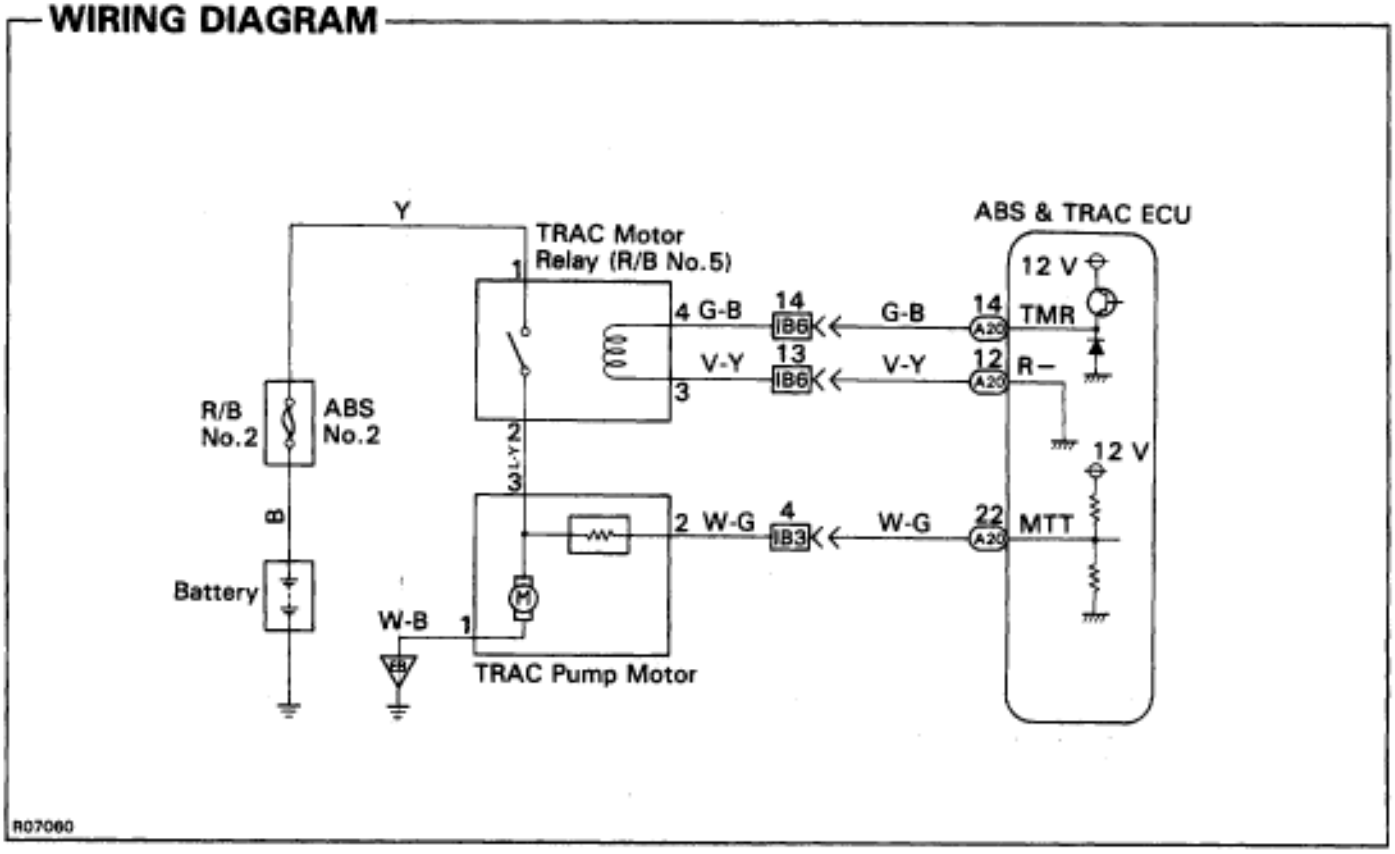

INSPECTION PROCEDURE

1 Check voltage between terminal 1 of R/B No. 5 (for TRAC motor relay) and body ground.

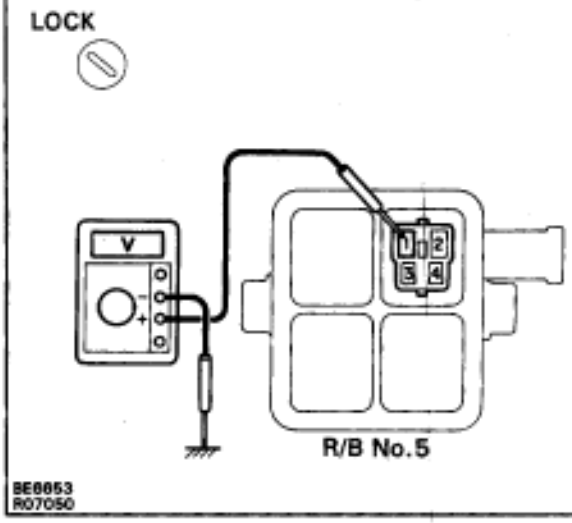

P Remove TRAC motor relay from R/B No. 5.

C Measure voltage between terminal 1 of R/B No. 5 (for TRAC motor relay) and body ground.

OK **Voltage: 10 — 14 V.**

OK

NG **Check and repair harness or connector.**

2 Check continuity between terminal 2 of R/B No. 5 (for TRAC motor relay) and terminal 2 of TRAC pump motor.

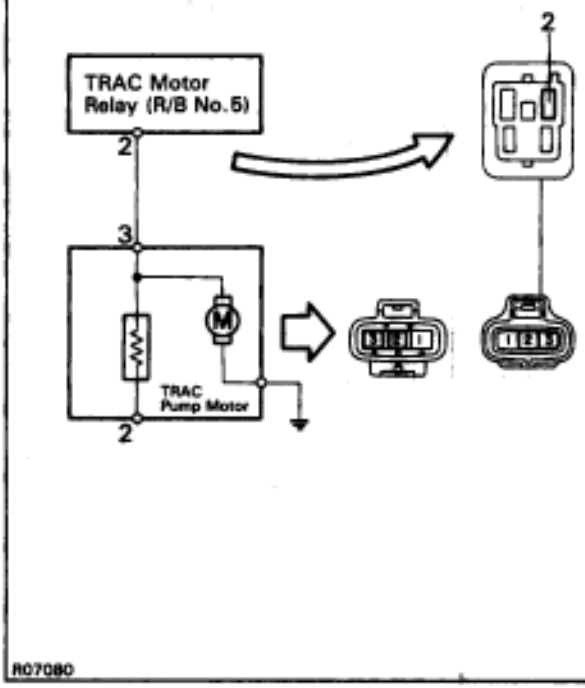

C Check continuity between terminal 2 of R/B No. 5 (for TRAC motor relay) and terminal 2 of TRAC pump motor.

OK **Continuity.**

HINT: There is a resistance of 4 — 6 between terminals 2 and 3 of TRAC pump motor.

OK

NG **Repair or replace harness or TRAC pump motor.**

3 Check TRAC motor relay.

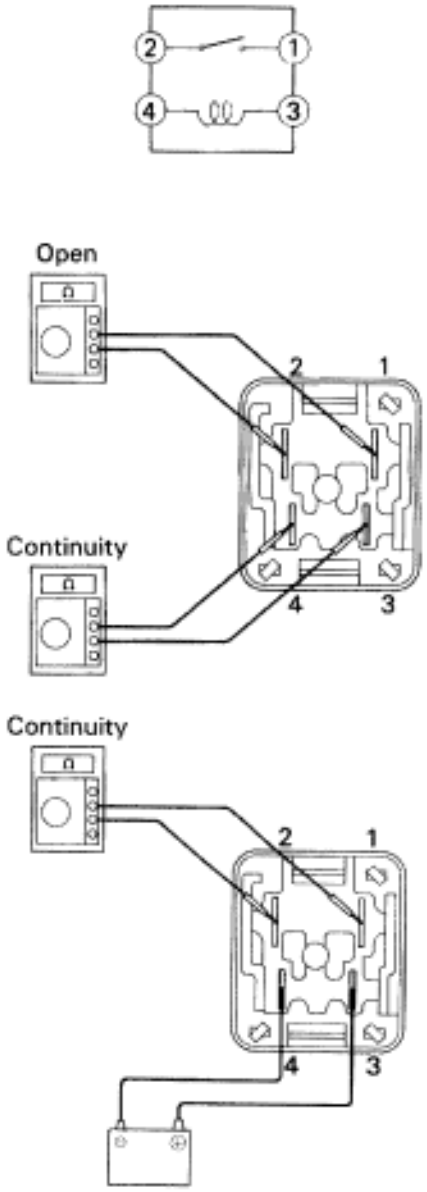

P Remove TRAC solenoid relay from R/B No. 5.

C Check continuity between each terminal of TRAC solenoid relay shown below.

OK

Terminals 3 and 4	Continuity (Reference value 62)
Terminals 1 and 2	Open

C
1. Apply battery voltage between terminals 3 and 4.
2. Check continuity between terminal shown below.

OK

Terminals 1 and 2	Continuity

OK

NG → **Replace TRAC solenoid relay.**

4 Check for open and short in harness and connector between TRAC motor relay and ABS & TRAC ECU (See page IN–30).

OK

NG → **Repair or replace harness or connector.**

If the same code is still output after the diagnostic trouble code is deleted, check the contact condition of each connection.
If the connections are normal, the ECU may be defective.

DTC 21 22 23 24 ABS Actuator Solenoid Circuit

CIRCUIT DESCRIPTION

This solenoid goes on when signals are received from the ECU and controls the fluid pressure acting on the brake cylinders, thus controlling the braking force.

DTC No.	Diagnostic Trouble Code Detecting Condition	Trouble area
21	Conditions (1) through (3) continue for 0.05 sec. or more: (1) ABS solenoid relay terminal (SR) voltage: Battery positive voltage (2) Voltage of ABS (& TRAC) ECU terminal AST: Battery positive voltage (3) When power transistor of ECU is ON, voltage of terminal SFR is 0 V or battery positive voltage.	ABS actuator Open or short in SFR circuit. ECU
22	Conditions (1) through (3) continue for 0.05 sec. or more: (1) ABS solenoid relay terminal (SR) voltage: Battery positive voltage (2) Voltage of ABS (& TRAC) ECU terminal AST: Battery positive voltage (3) When power transistor of ECU is ON, voltage of terminal SFL is 0 V or battery positive voltage.	ABS actuator Open or short in SFL circuit. ECU
23	Conditions (1) through (3) continue for 0.05 sec. or more: (1) ABS solenoid relay terminal (SR) voltage: Battery positive voltage (2) Voltage of ABS (& TRAC) ECU terminal AST: Battery positive voltage (3) When power transistor of ECU is ON, voltage of terminal SRR is 0 V or battery positive voltage.	ABS actuator Open or short in SRR circuit. ECU
24	Conditions (1) through (3) continue for 0.05 sec. or more: (1) ABS solenoid relay terminal (SR) voltage: Battery positive voltage (2) Voltage of ABS (& TRAC) ECU terminal AST: Battery positive voltage (3) When power transistor of ECU is ON, voltage of terminal SRL is 0 V or battery positive voltage.	ABS actuator Open or short in SRL circuit. ECU

Fail safe function: If trouble occurs in the actuator solenoid circuit, the ECU cuts off current to the solenoid relay and prohibits ABS control.

WIRING DIAGRAM

w/o TRAC

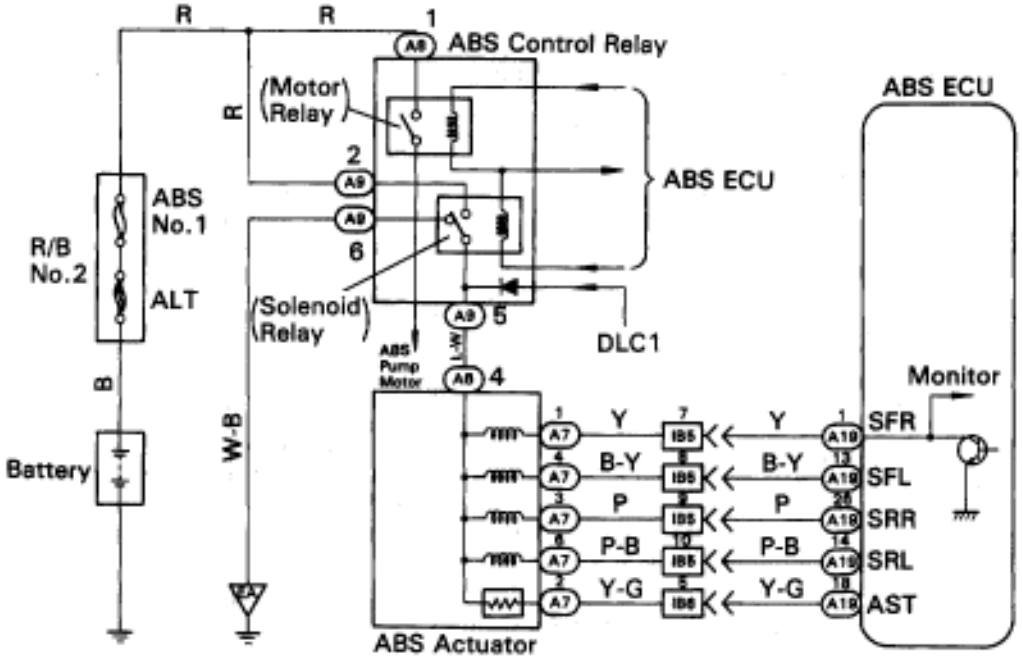

w/ TRAC

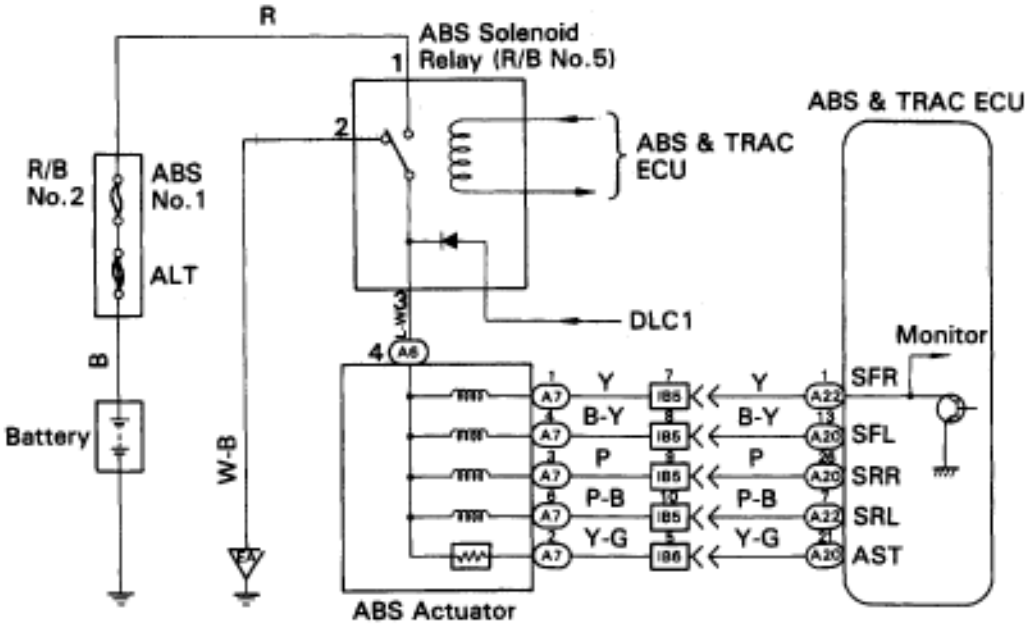

R12487
R07062

1 Check ABS actuator solenoid.

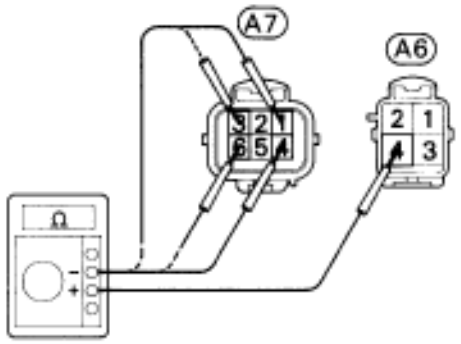

R05047

C Check continuity between terminal (A6) 4 and (A7) 1, 3, 4, 6 of the ABS actuator connector.

OK **Continuity**

HINT: Resistance of each solenoid coil is 1.1 .

OK → **2**

NG → **Replace ABS actuator.**

2 Check for open and short in harness and connector between ABS (& TRAC) ECU and actuator (See page IN–30).

OK →

NG → **Repair or replace harness or connector.**

If the same code is still output after the diagnostic trouble code is deleted, check the contact condition of each connection.
If the connections are normal, the ECU may be defective.

DTC 25 27 TRAC Actuator Solenoid Circuit

CIRCUIT DESCRIPTION

The TRAC actuator solenoid operates in accordance with signals from the ECU and raises the fluid pressure in and releases it from the brake cylinders.

DTC No.	Diagnostic Trouble Code Detecting Condition	Trouble area
25	Conditions (1) and (2) continue for 0.05 sec. or more: (1) TRAC solenoid relay terminal (TSR) voltage: Battery positive voltage (2) Voltage oS & TRAC ECU terminal AB SMC: 0 V	TRAC actuator Open or short in SMC circuit ECU
27	Conditions (1) and (2) continue for 0.05 sec. or more: (1) TRAC solenoid relay terminal (TSR) voltage: Battery positive voltage (2) Voltage of ABS & TRAC ECU terminal SRC: 0V	TRAC actuator Open or short in SRC circuit ECU

Fail safe function: If trouble occurs in this solenoid circuit, the ECU cuts off current to the ABS and TRAC solenoid relays and prohibits ABS and TRAC control.

WIRING DIAGRAM

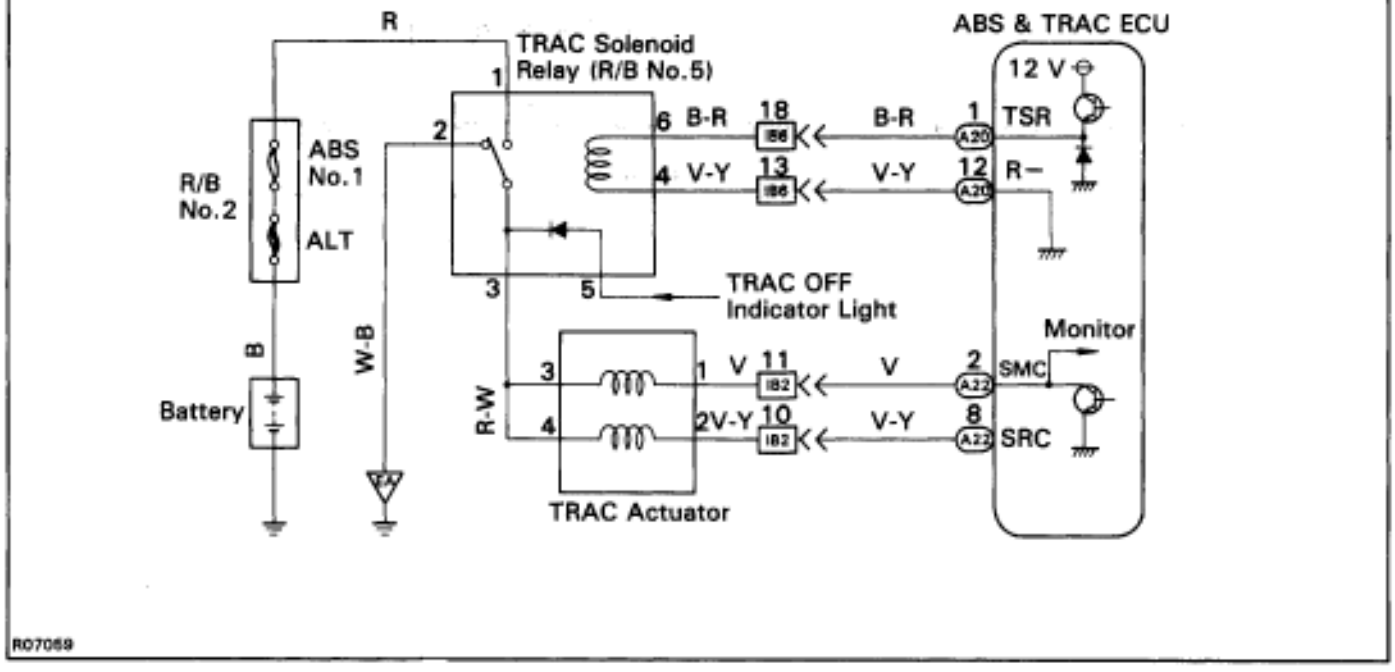

INSPECTION PROCEDURE

1 Check TRAC actuator solenoid.

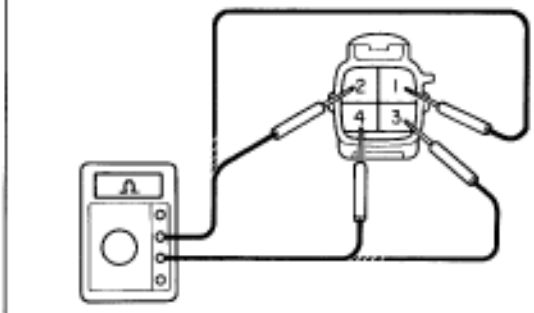

P Disconnect TRAC actuator connector.

C Check continuity between each terminal of TRAC solenoid relay shown below.

OK

Terminals 1 and 3	Continuity (Reference value 2 Ω)
Terminals 2 and 4	
Terminals 1 and 2	Open

OK → **2**

NG → **Replace TRAC actuator.**

2 Check for open and short in harness and connector between solenoid relay and ECU (See page IN–30).

OK → **3**

NG → **Repair or replace harness or connector.**

3 Check for short in harness and connector between SMC and SRC terminals with TRAC actuator and ECU connectors are disconnected.

OK

NG → **Repair or replace harness or connector.**

If the same code is still output after the diagnostic trouble code is deleted, check the contact condition of each connection.
If the connections are normal, the ECU may be defective.

DTC 31 32 33 34 35 36 Speed Sensor Circuit

CIRCUIT DESCRIPTION

The speed sensor detects the wheel speed and sends the appropriate signals to the ECU. These signals are used to control both the ABS and TRAC control systems. The front and rear rotors each have 48 serrations. When the rotors rotate, the magnetic field emitted by the permanent magnet in the speed sensor generates an AC voltage. Since the frequency of this AC voltage changes in the direct proportion to the speed of the rotor, the frequency is used by the ECU to detect the speed of each wheel.

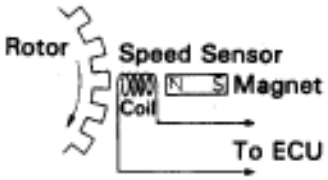

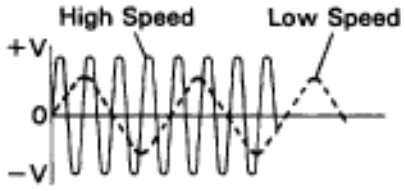

BR3583
BR3582

DTC No.	Diagnostic Trouble Code Detecting Condition	Trouble area
31, 32 33, 34	Detection of any of conditions (1) through (3): (1) At vehicle speed of 10 km/h (6 mph) or more, pulses are not input for 5 sec. (2) Momentary interruption of he vehicle speed sensor signal occurs at least 7 times in the time between switching the ignition switch ON and switching it OFF. (3) Abnormal fluctuation of speed sensor sig–nals with the vehicle speed 20 km/H (12 mph) or more.	Right front, left front, right rear and left rear speed sensor. Open or short in each speed sensor circuit. ECU
35	Speed sensor signal is not input for about 1 sec. while the left front and right rear speed sensor signals are being checked with the IG switch ON.	Open in left front, right rear speed sensor circuit. ECU
36	Speed sensor signal is not input for about 1 sec. while the right front and left rear speed sensor signals are being checked with the IG switch ON.	Open in right front, left rear speed sensor circuit. ECU

HINT: DTC No.31 is for the right front speed sensor.
DTC No. 32 is for the left front speed sensor.
DTC No.33 is for the right rear speed sensor.
DTC No.34 is for the left rear speed sensor.

Fail safe function: If trouble occurs in the speed sensor circuit, the ECU cuts off current to the ABS solenoid relay and prohibits ABS control.

WIRING DIAGRAM

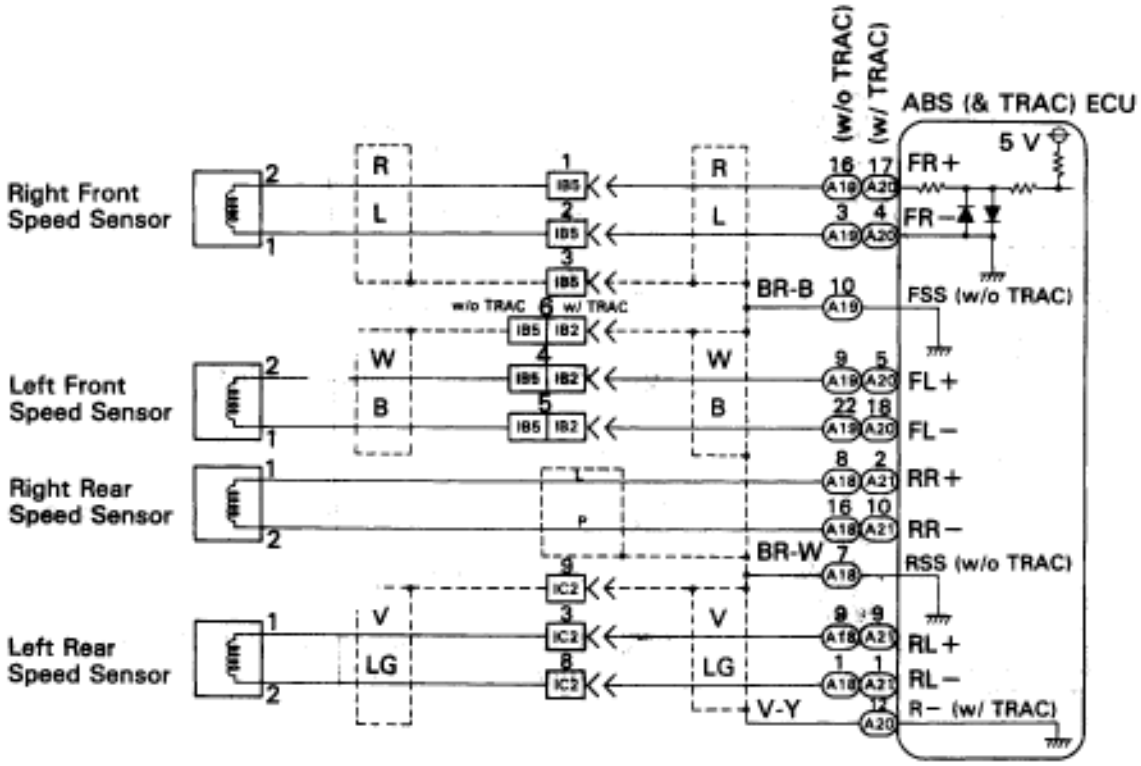

RO7087

INSPECTION PROCEDURE

1 Check speed sensor.

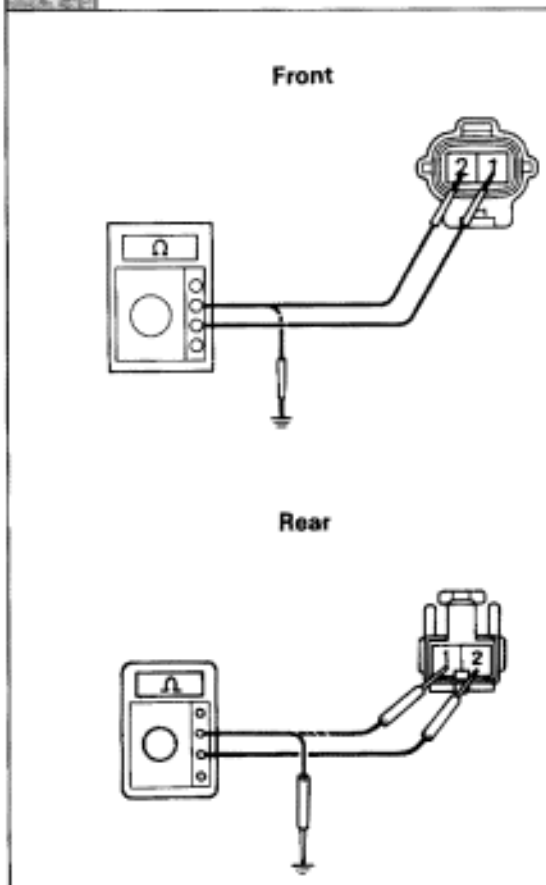

Front

P 1. Remove front fender splash shield.
2. Disconnect speed sensor connector.

C Measure resistance between terminals 1 and 2 of speed sensor connector.

OK **Resistance : 0.7 — 1.7 kΩ**

C Measure resistance between terminals 1 and 2 of speed sensor connector and body ground.

OK **Resistance : 1 MΩ or higher**

Rear

P 1. Remove rear set cushion, seat back and quarter trim panel.
2. Disconnect speed sensor connector.

C Measure resistance between terminals 1 and 2 of speed sensor connector.

OK **Resistance : 0.7 — 1.7 kΩ**

C Measure resistance between terminals 1 and 2 of speed sensor connector and body ground.

OK **Resistance : 1 MΩ or higher**

OK → **2 Check for open and short in harness and connector between each speed sensor and ECU (See page IN–30).**

NG → **Replace speed sensor.**

NOTICE: Check the speed sensor signal last (See page BR–62).

OK → NG → **Repair or replace harness or connector.**

3 Check sensor rotor and sensor installation.

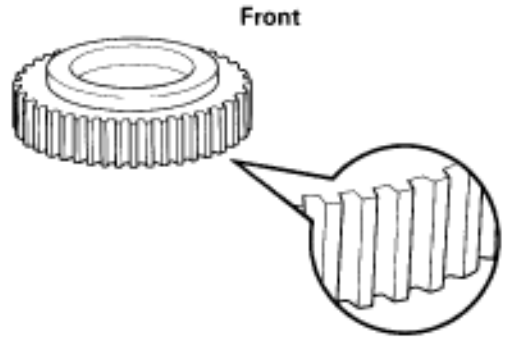

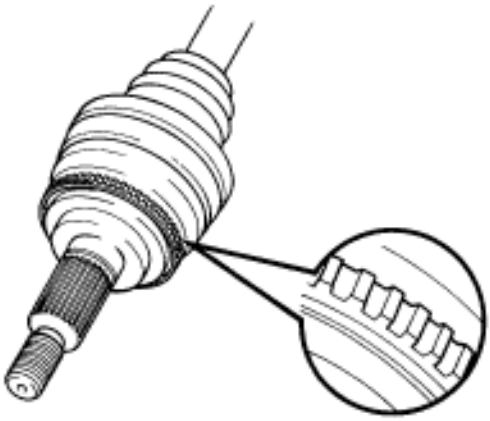

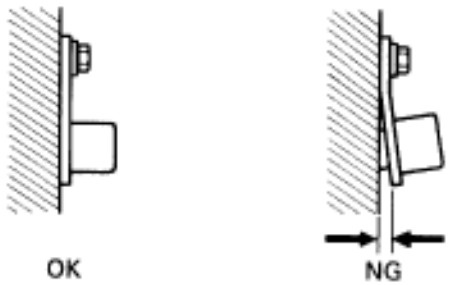

BR3719
BR3720
BR3795

Front

P Remove front speed sensor rotor (See page SA–15).

C Check sensor rotor serrations.

OK **No scratches or missing teeth.**

C Check the front speed sensor installation.

OK **The installation bolt is tightened properly.**

Rear

P Remove the drive shaft (See page BR–45).

C Check sensor rotor serrations.

OK **No scratches or missing teeth.**

C Check the rear speed sensor installation.

OK **The installation bolt is tightened properly and there is no clearance between the sensor and rear axle carrier.**

OK

NG **Replace speed sensor or rotor.**

NOTICE: Check the speed sensor signal last (See page BR–62).

Check and replace ABS (& TRAC) ECU.

DTC 41 IG Power Source Circuit

CIRCUIT DESCRIPTION

This is the power source for the ECU, hence the CPU and the actuators.

DTC No.	Diagnostic Trouble Code Detecting Condition‘	Trouble area
41	When either of the following (1) or (2) is detected: (1) Voltage at ECU terminal IG1 is less than 9.5 V for more than 10 sec. while vehicle speed is 3 km/h (1.9 mph) or more. (2) Voltage at ECU terminal IG1 is more than 17 V for more than 1.2 sec.	Battery IC regulator Open or short in power source circuit ECU

Fail safe function: If trouble occurs in the power source circuit, the ECU cuts off current to the ABS solenoid relay and prohibits ABS control.

WIRING DIAGRAM

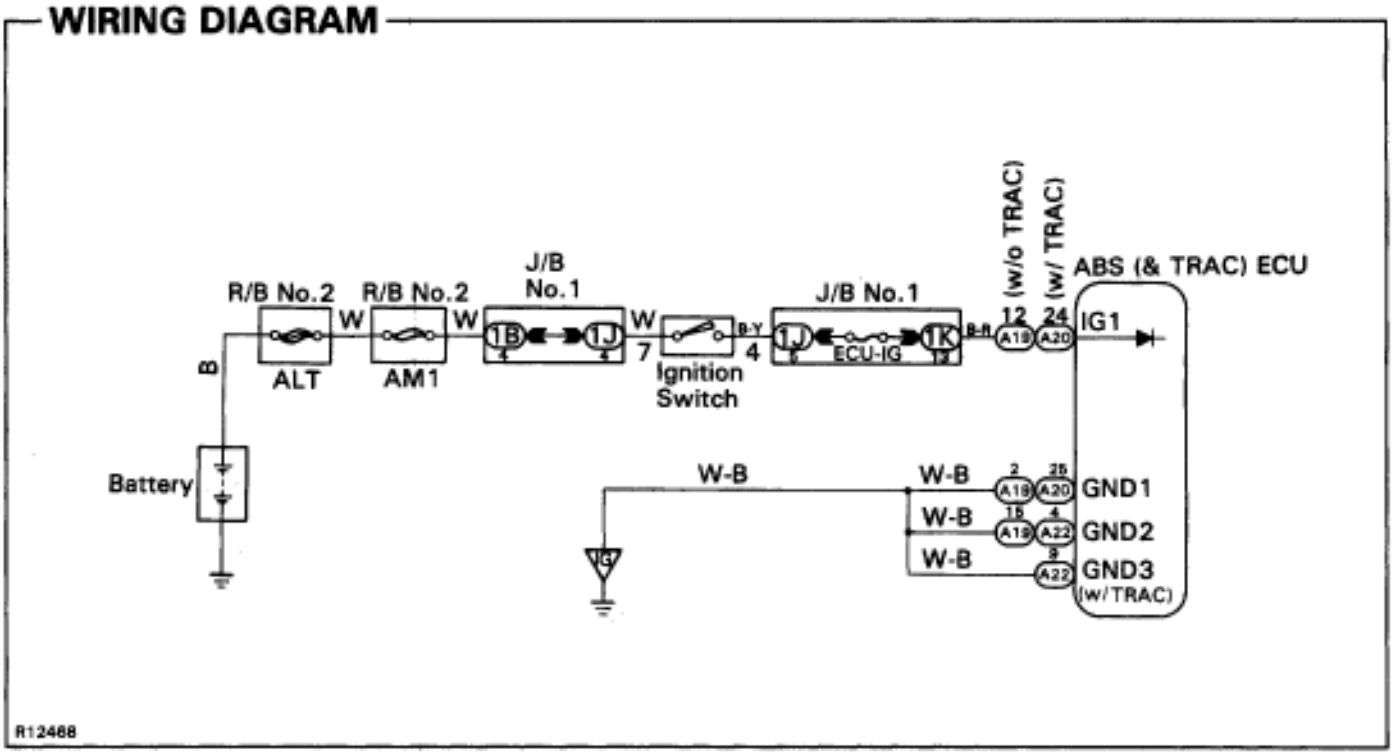

INSPECTION PROCEDURE.

1 Check battery positive voltage.

OK **Voltage: 10 — 14 V**

OK → NG: **Check and repair the charging system.**

2 Check voltage between terminals IG1 and GND of ABS (& TRAC) ECU connector.

w/o TRAC

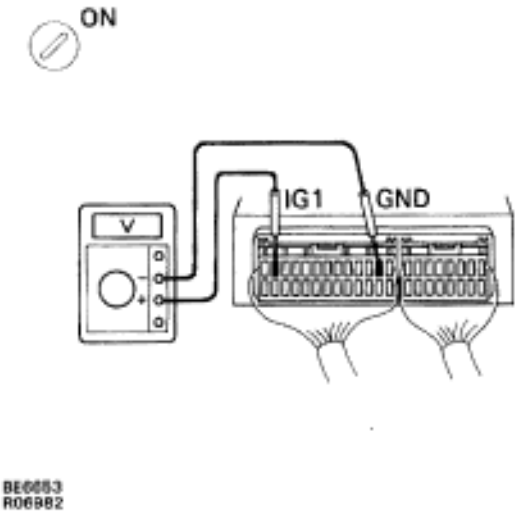

w/ TRAC

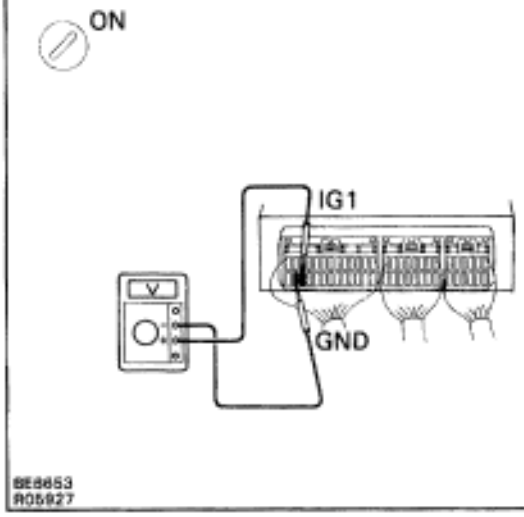

P Remove ABS (& TRAC) ECU with connectors still connected.

C
1. Turn ignition switch ON.
2. Measure voltage between terminals IG1 and GND of ABS (& TRAC) ECU connector.

OK **Voltage: 10 — 14 V**

NG → OK: **Check and replace ABS (& TRAC) ECU.**

3 Check continuity between terminal GND of ABS (& TRAC) ECU connector and body ground.

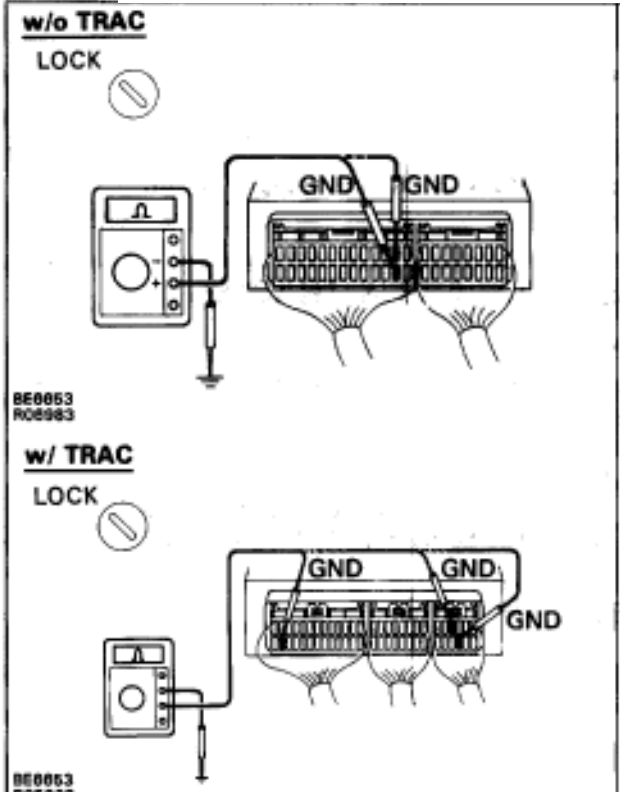

C Measure resistance between terminals GND of ABS (& TRAC) ECU connector and body ground.

OK **Resistance: 1 or less**

OK

NG **Repair or replace harness or connector.**

4 Check ECU–IG fuse.

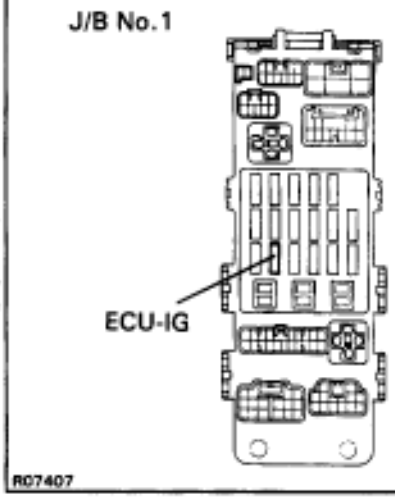

P Remove ECU–IG fuse from J/B No. 1.

C Check continuity of ECU–IG fuse.

OK **Continuity**

OK

NG **Check for short in all the harness and components connected to ECU–IG fuse (See attached wiring diagram).**

Check for open in harness and connector between ABS (& TRAC) ECU and battery (See page IN–30).

DTC 44 Lateral Acceleration Sensor Circuit

CIRCUIT DESCRIPTION

This sensor detects acceleration acting laterally on the vehicle. The sensor signal is used in ABS control. If the sensor functions abnormally, the ABS warning light comes on but the ABS still operates.

DTC No.	Diagnostic Trouble Code Detecting Condition	Trouble area
44	Either of the following (1) or (2) is detected: (1) An open or short is detected in circuit GS1 or GS2 for 1 sec. (2) After the ignition is turned ON, the test signal is output by GST. During this time, a trouble signal is detected for 0.5 sec.	Lateral acceleration sensor Open or short in lateral acceleration sensor circuit ECU

WIRING DIAGRAM

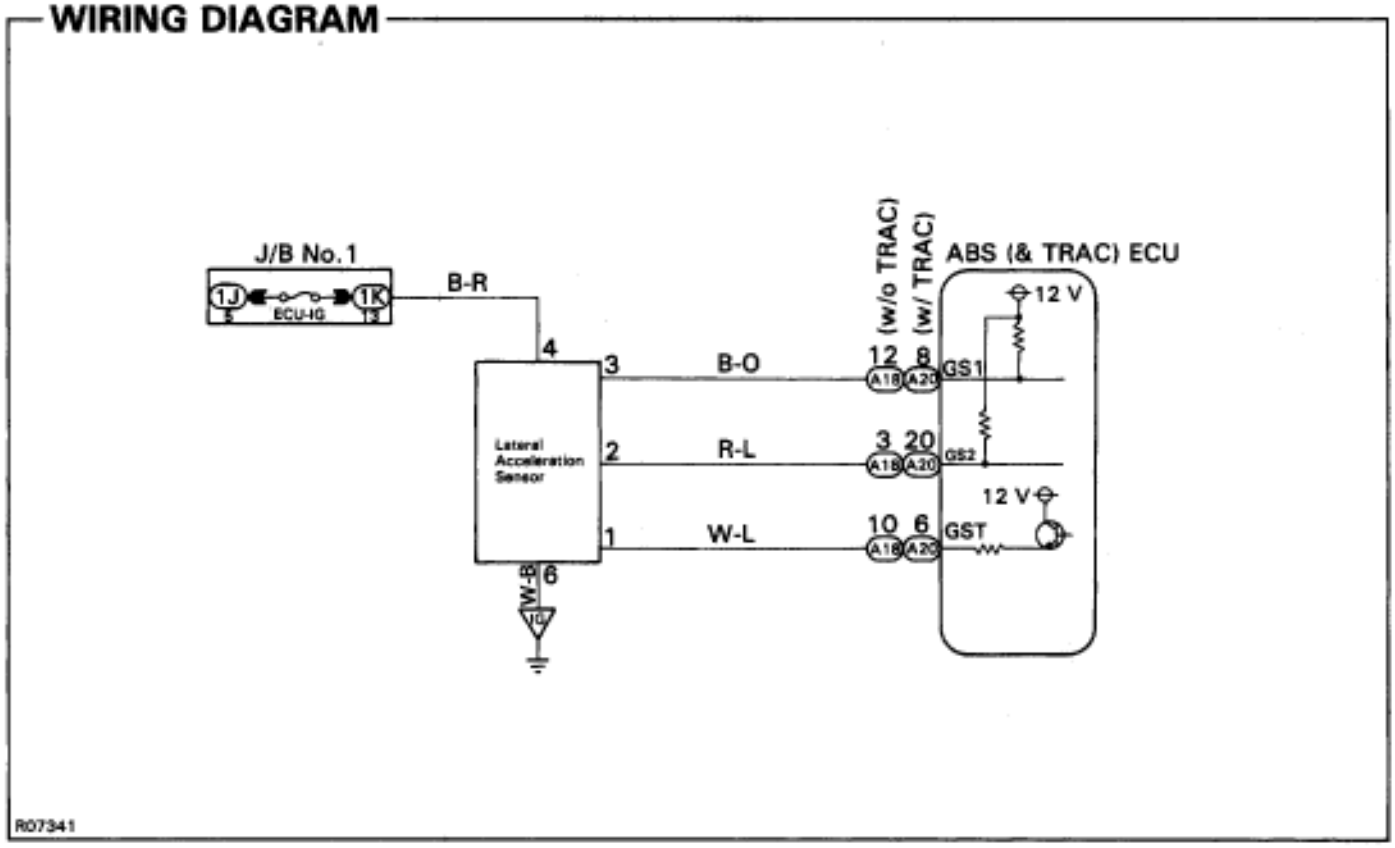

INSPECTION PROCEDURE.

1 **Check for open and short in harness and connector between sensor and ECU (See page IN–30).**

OK

NG → **Repair or replace harness or connector.**

2 **Check voltage between terminals GS1, GS2, GST of ECU and body ground.**

w/o TRAC

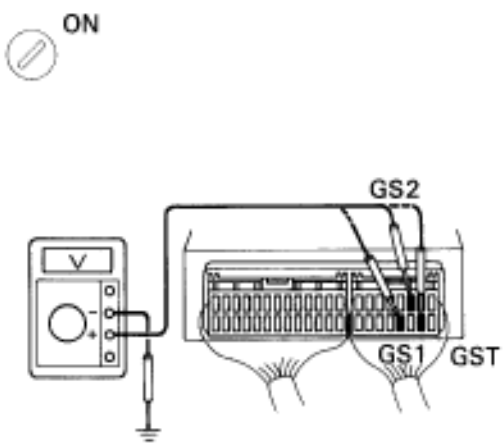

w/ TRAC

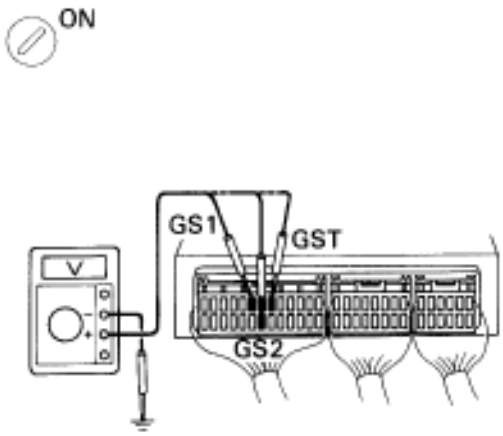

P
1. Remove ABS (& TRAC) ECU with connectors still connected.
1. Disconnect sensor connector.
3. Turn ignition switch ON.

C
Measure voltage between terminals GS1, GS2, GST of ECU and body ground.

OK
Voltage:
GS1, GS2: 10 — 14 V
GST: As shown below

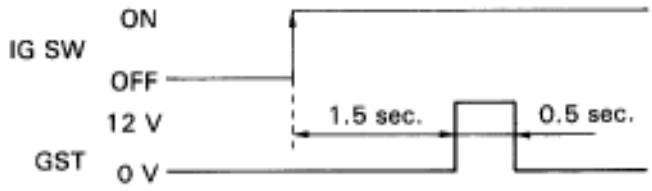

OK

NG → **Check and replace ABS (& TRAC) ECU.**

Check and replace lateral acceleration sensor.

DTC 51 ABS Pump Motor Lock

CIRCUIT DESCRIPTION

DTC No.	Diagnostic Trouble Code Detecting Condition	Trouble area
51	Pump motor is not operating normally during initial check.	ABS pump motor

Fail safe function: If trouble occurs in the ABS pump motor, the ECU cuts off the current to the solenoid relay and prohibits ABS control.

WIRING DIAGRAM

See page BR–72

INSPECTION PROCEDURE

See inspection of ABS actuator (See page BR–44).

DTC 55 Brake Fluid Level Warning Switch Circuit

CIRCUIT DESCRIPTION

The brake fluid level warning switch sends the appropriate signal to the ECU when the brake fluid level drops.

DTC No.	Diagnostic Trouble Code Detecting Condition	Trouble area
55	Voltage at ECU terminal LBL is 0 V continuously for 10 sec. or more.	Brake fluid level Brake fluid level warning switch Short in brake fluid level warning switch circuit ECU

Fail safe function: If trouble occurs in this circuit, the ECU cuts off current to the TRAC solenoid relay and prohibits TRAC control.

WIRING DIAGRAM

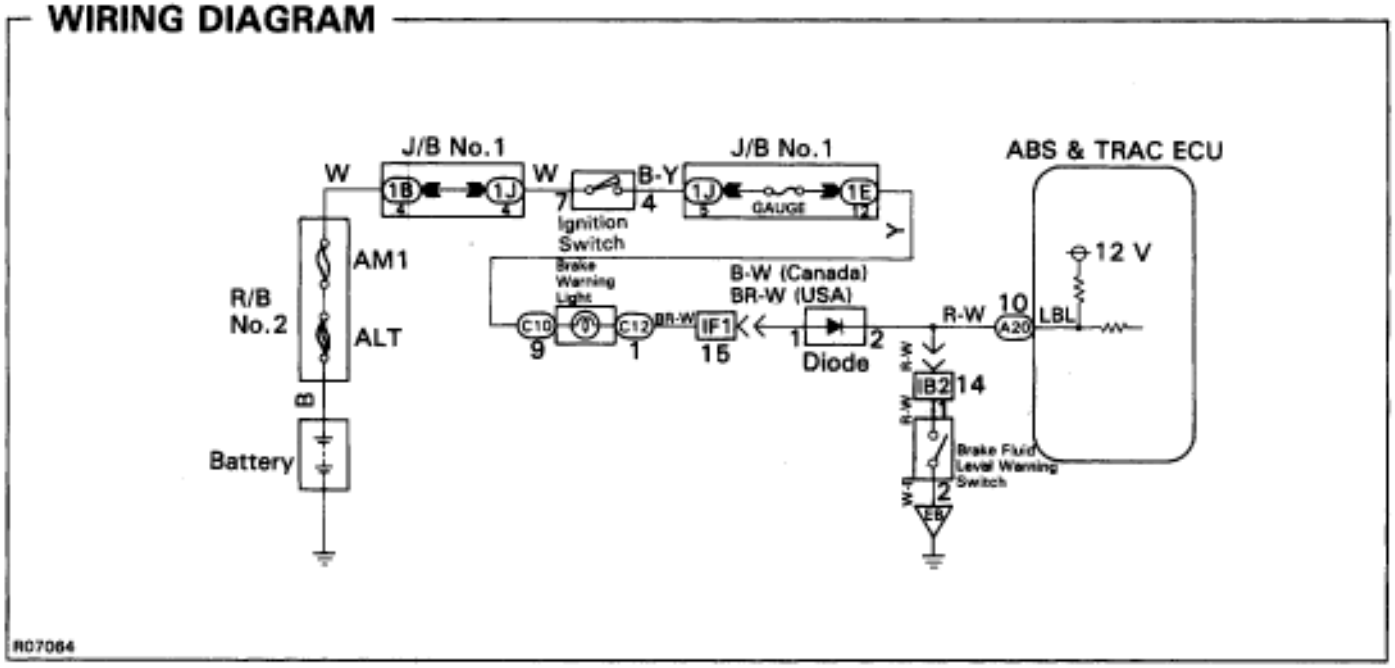

INSPECTION PROCEDURE

1 Check brake fluid level.

C Check the amount of fluid in the brake reservoir.

OK

NG → **Check and repair brake fluid leakage and add fluid.**

2 Check brake fluid level warning switch.

See page BE–52.

OK

NG → **Replace brake fluid level warning switch.**

3 Check for short in all the harness and components connected to brake fluid level warning light (See page IN–30).

OK

NG → **Repair or replace harness or connector.**

Check and replace ABS & TRAC ECU.

DTC 58 TRAC Pump Motor Circuit

CIRCUIT DESCRIPTION

This motor is used to apply hydraulic pressure for the rear wheel brakes during TRAC control.

DTC No.	Diagnostic Trouble Code Detecting Condition	Trouble area
58	Conditions (1) through (3) continue for 2 sec. or more: (1) TRAC motor relay: Normal (2) TRAC motor: OFF (3) Voltage of ABS & TRAC ECU terminal MTT: 4–8 V	TRAC pump motor Open in TRAC pump motor circuit ECU

Fail safe function: If trouble occurs in this circuit, the ECU cuts off current to the TRAC solenoid relay and prohibits TRAC control.

WIRING DIAGRAM

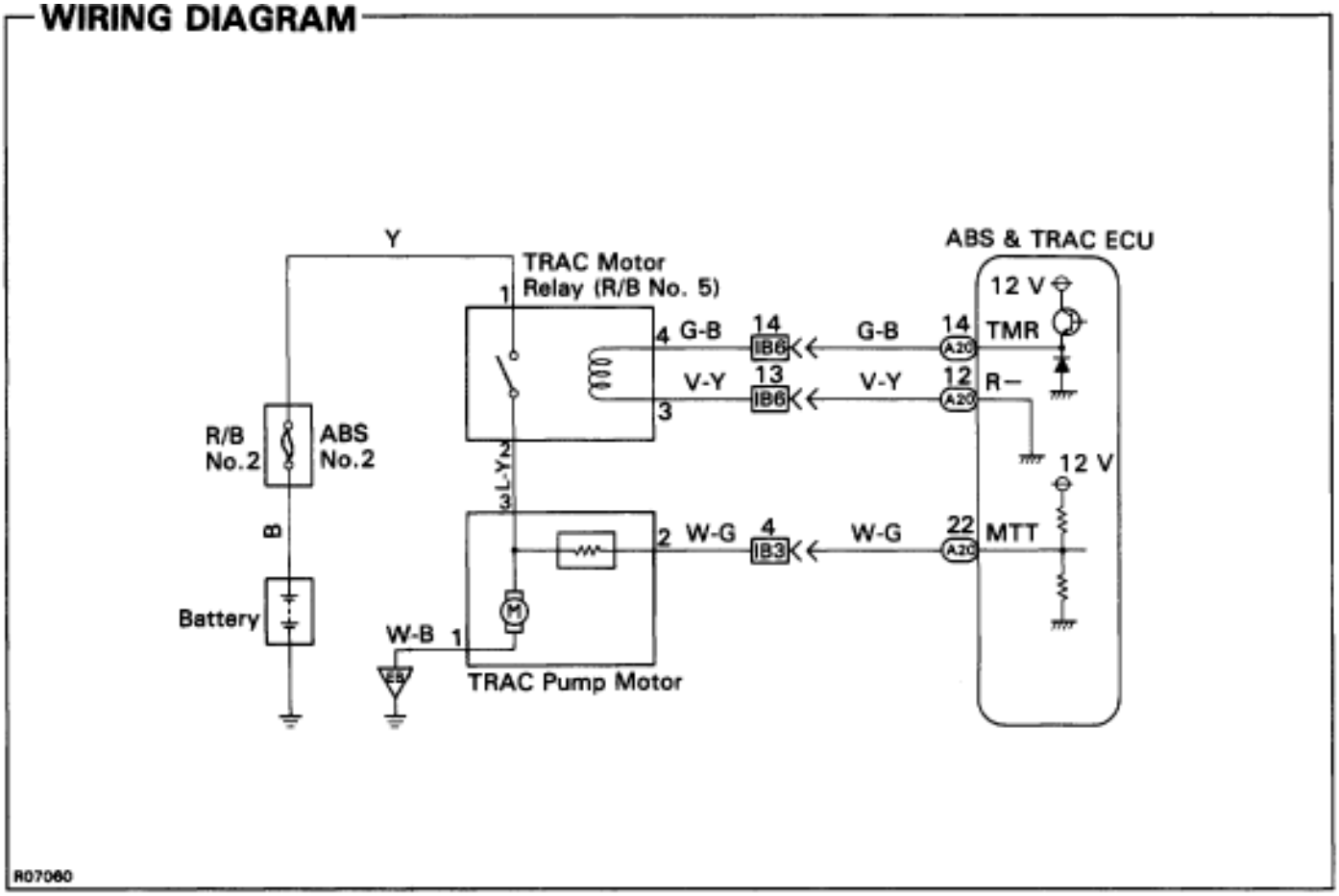

INSPECTION PROCEDURE.

1 Check TRAC pump motor.

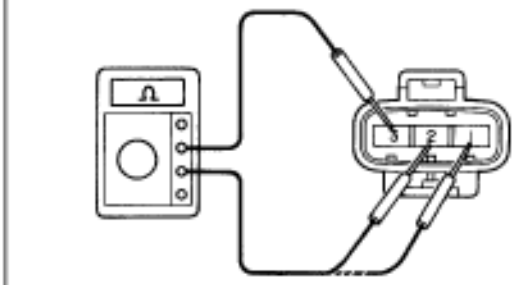

R07339

P Disconnect TRAC pump motor connector.

C Check continuity between each terminal of TRAC pump motor shown below.

OK

Terminals 1 and 3	Continuity (Reference value 100 or less)
Terminals 2 and 3	Continuity (Reference value 4 ~ 6 or less)

OK

NG → **Replace TRAC pump motor.**

2 Check continuity between terminal 1 of TRAC pump motor connector and body ground.

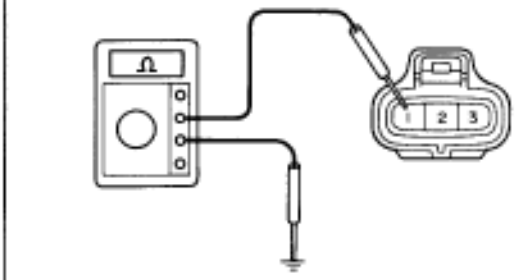

R07340

C Measure resistance between terminal 1 of TRAC pump motor connector and body ground.

OK **Resistance: 1 or less**

OK

NG → **Repair or replace harness or connector.**

3 Check for open and short in harness and connector between TRAC pump motor and ECU (See page IN–30).

OK

NG → **Repair or replace harness or connector.**

Check and replace ABS & TRAC ECU.

DTC 61 TRAC ECU Communication Circuit Malfunction

CIRCUIT DESCRIPTION

DTC No.	Diagnostic Trouble Code Detecting Condition	Trouble area
61	Either of the following (1) or (2) continues for more than 8 sec.: (1) Vehicle speed signal of 4 wheels is less than 1 km/h (1 mph) when TRCO signal is input. (2) Voltage of ABS & TRAC ECU terminal THFA is 0 V when TRCO signal is not input.	Open or short in THFA, TRCO circuit ABS & TRAC ECU TRAC ECU

WIRING DIAGRAM

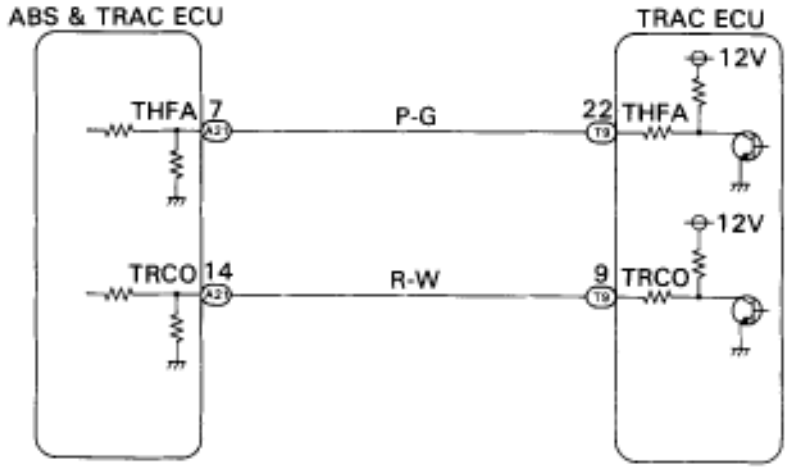

BR5413

INSPECTION PROCEDURE.

1 Check voltage between terminals THFA, TRCO of ABS & TRAC ECU and body ground.

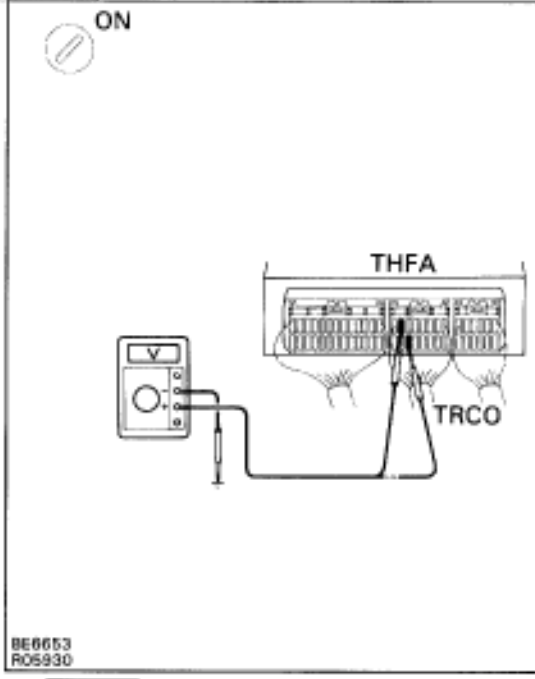

P Remove ABS & TRAC ECU with connectors still connected.

C Measure voltage between terminals THFA, TRCO of ABS & TRAC ECU and body ground when ignition switch is turned ON.

OK **Voltage:**
TRCO: 7 — 12 V
THFA: About 5 V (Pulse)

(Reference)

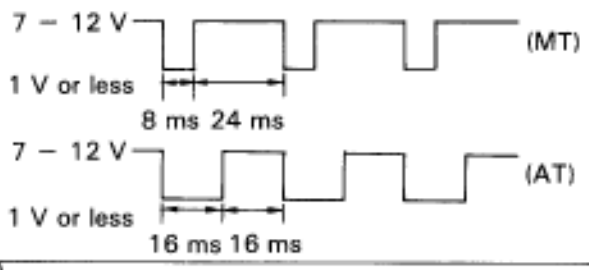

NG → OK: **Check and replace ABS & TRAC ECU.**

2 Check voltage between terminals THFA, TRCO of ABS & TRAC ECU and body ground with ABS & TRAC ECU connector is disconnected.

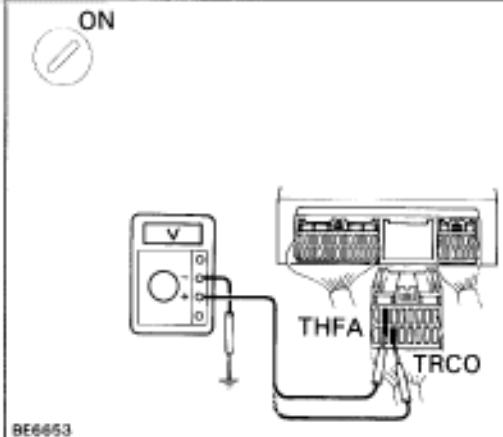

P Disconnect ABS & TRAC ECU connector.

C Measure voltage between terminals THFA, TRCO of ABS & TRAC ECU connector and body ground when ignition switch is turned ON.

OK **Voltage: See step 1.**

NG → OK: **Check and replace ABS & TRAC ECU.**

3 Check for open and short in harness and connector between ABS & TRAC ECU and TRAC ECU (See page IN–30).

NG: **Check and replace or connector.**

OK → **Check and replace TRAC ECU.**

DTC 62 TRAC Vehicle Speed Malfunction

CIRCUIT DESCRIPTION

DTC No.	Diagnostic Trouble Code Detecting Condition	Trouble area
62	At vehicle speed of 10 km/h (6 mph) or more, pulses are not input for 5 sec.	ECU

HINT: When DTC Nos.31 — 36 are recorded in memory, DTC No.62 is not recorded.

INSPECTION PROCEDURE

1 **Are there any other codes (Besides DTC No.62) being output?**

YES **Go to relevant DTC chart.**

NO

Replace ABS & TRAC ECU.

Stop Light Switch Circuit

CIRCUIT DESCRIPTION

The stop light switch senses whether the brake pedal is depressed or released, and spends a signal to the ECU.

WIRING DIAGRAM

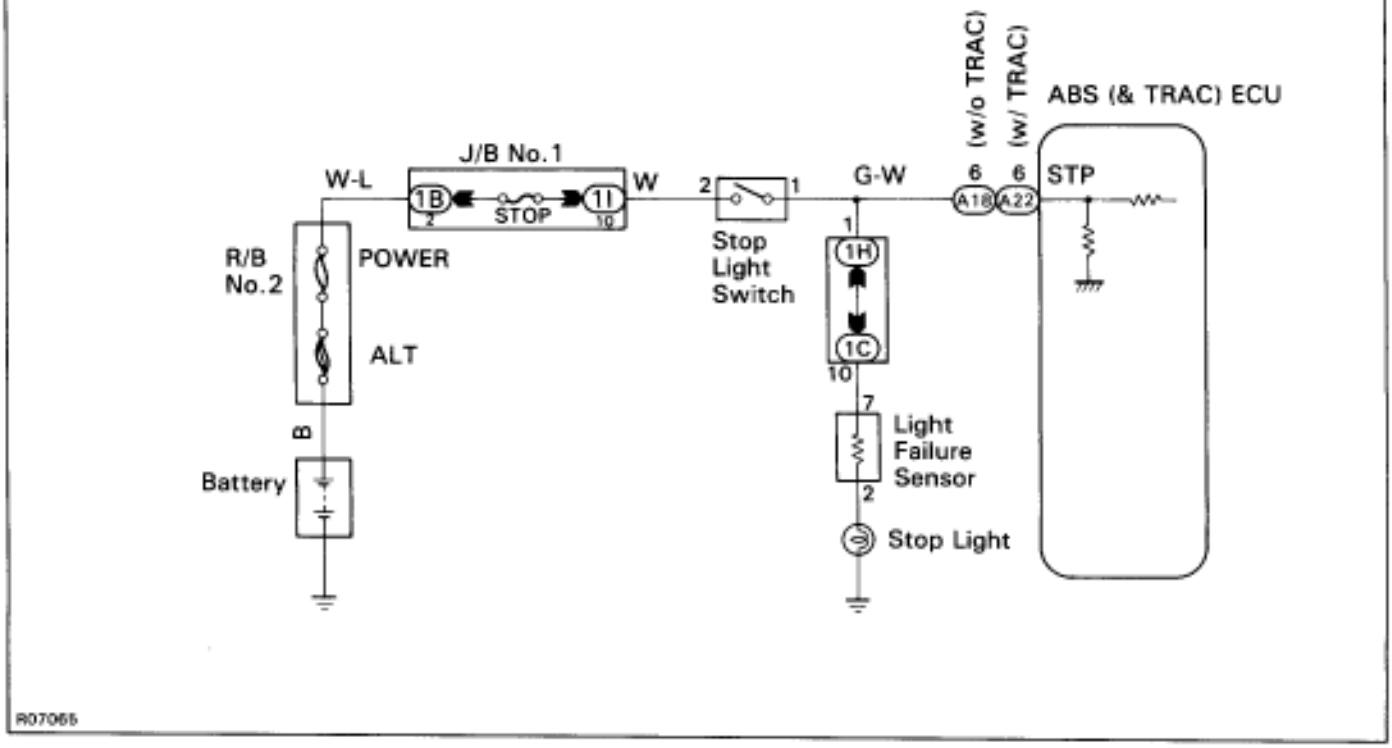

INSPECTION PROCEDURE

1 Check operation of stop light.

C Check the stop light lights up when brake pedal is depressed and turns off when brake pedal is released.

OK

NG → **Repair stop light circuit.**

2 Check voltage between terminal STP of ABS (& TRAC) ECU and body ground.

w/o TRAC

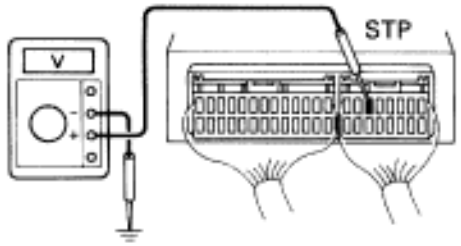

w/ TRAC

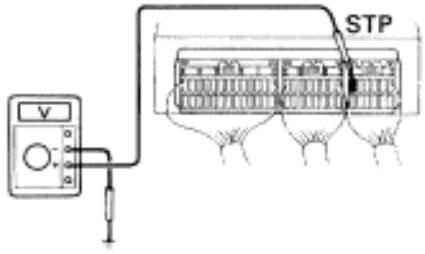

R07015
R05931

P Remove ABS & TRAC ECU with connectors still connected.

C Measure voltage between terminals STP of ABS (& TRAC) ECU and body ground when brake pedal is depressed.

OK **Voltage: 8 — 14 V**

NG

OK → **Proceed to next circuit inspection shown on problem symptoms chart (See page BR–64).**

3 Check for open in harness and connector between ABS (& TRAC) ECU and stop light switch (See page IN–30).

OK

NG → **Repair or replace harness or connector.**

Check and replace ABS (& TRAC) ECU.

ABS Warning Light Circuit

CIRCUIT DESCRIPTION

If the ECU detects trouble, it lights the ABS warning light while at the same time prohibiting ABS control. At this time, the ECU records a diagnostic trouble code in memory.
After removing the short pin of the DLC1, connect terminals Tc and E1 of the DLC1 or DLC2 to make the ABS warning light to blink and output the diagnostic trouble code.

WIRING DIAGRAM

w/o TRAC

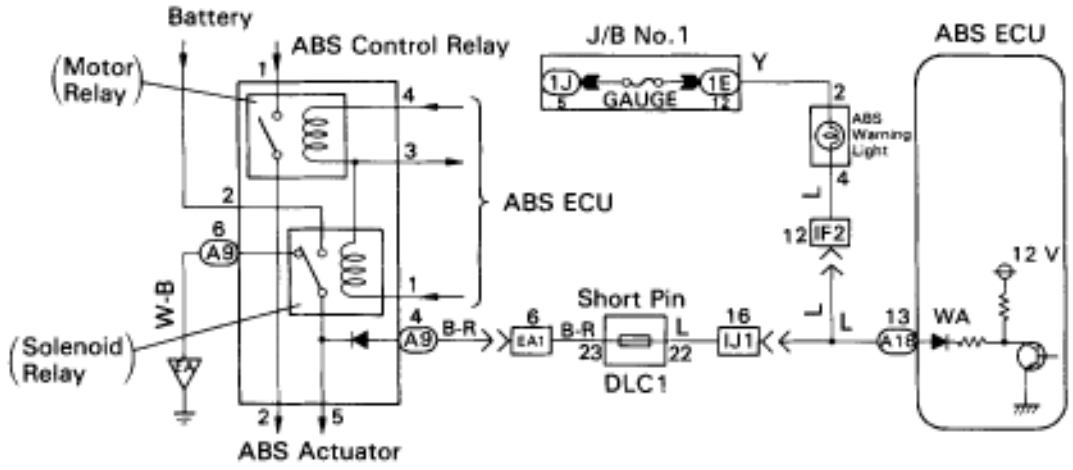

w/ TRAC

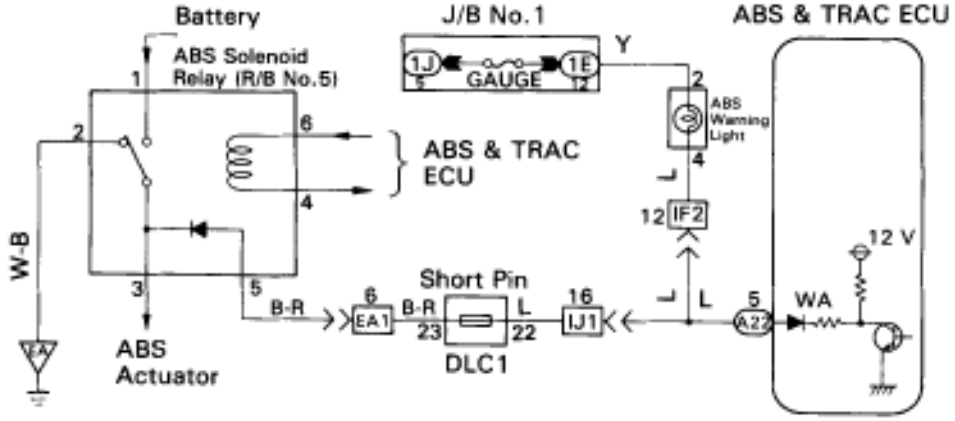

R07066
R07067

INSPECTION PROCEDURE (w/o TRAC)

Perform troubleshooting in accordance with the chart below for each trouble symptom.

ABS warning light does not light up	Go to step [1]
ABS warning light remains on	Go to step [3]

1 Check ABS warning light.

See Combination Meter Troubleshooting on page BE–43.

OK

NG **Replace bulb or combination meter assembly.**

2 Check ABS solenoid relay.

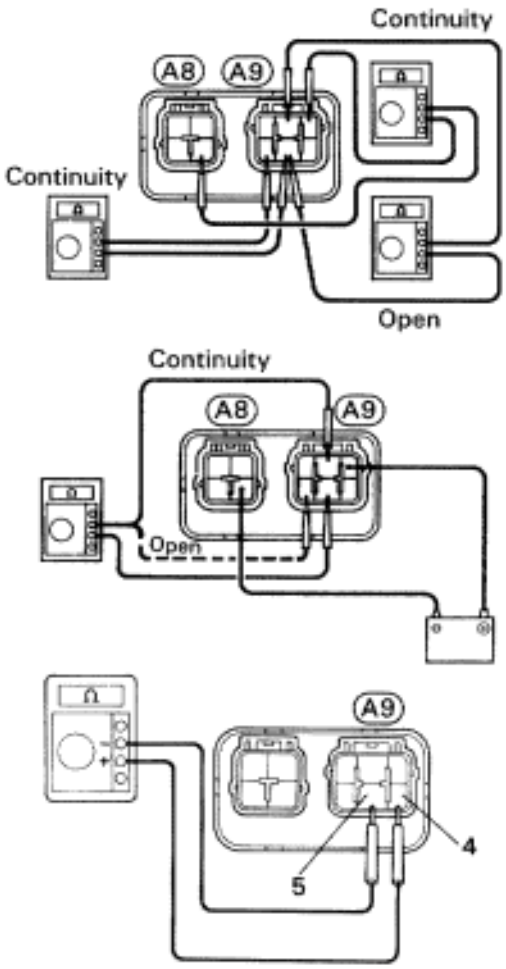

P Disconnect the connectors from solenoid relay.

C Check continuity between each terminal of ABS solenoid relay shown below.

OK

Terminals (A9) 1 and (A8) 3	Continuity (Reference value 80)
Terminals (A9) 5 and (A9) 6	Continuity
Terminals (A9) 2 and (A9) 5	Open

C (1) Apply battery positive voltage between terminals (A9) 1 and (A8) 3.
(2) Check continuity between each terminal of ABS solenoid relay shown below.

OK

Terminals (A9) 5 and (A9) 6	Open
Terminals (A9) 2 and (A9) 5	Continuity

C Connect the ⊕ test lead to terminal (A9)4 and the ⊖ lead to the terminal (A9)5. Check continuity between the terminals.

OK **Continuity**
If there is no continuity, connect the ⊖ test lead to terminal (A9)4 and the ⊕ lead to terminal (A9)5. Recheck continuity between terminals.

OK

NG **Replace ABS control relay.**

Repair or replace and check for open in harness and connector between DLC1 and ABS solenoid relay and body ground (See page IN–30).

3 **Is diagnostic trouble code output?**

Do diagnostic trouble code check on page BR–54.

NO

YES → **Repair circuit indicated by the code output.**

4 **Does ABS warning light go off if short pin is removed?**

YES

NO → **Check for short in harness and connector between warning light and DLC1 and ECU (See page IN–30).**

5 **Check ABS solenoid relay (See step No.2).**

OK

NG → **Repair ABS control relay.**

Repair or replace and check for short in harness and connector between DLC1 and ABS solenoid relay (See page IN–30).

INSPECTION PROCEDURE (w/ TRAC)

Troubleshoot in accordance with the chart below for each trouble symptom.

ABS warning light does not light up	Go to step [1]
ABS warning light remains on	Go to step [3]

1 Check ABS warning light.

See Combination Meter Troubleshooting on page BE–43.

OK

NG **Replace bulb or combination meter assembly.**

2 Check ABS solenoid relay.

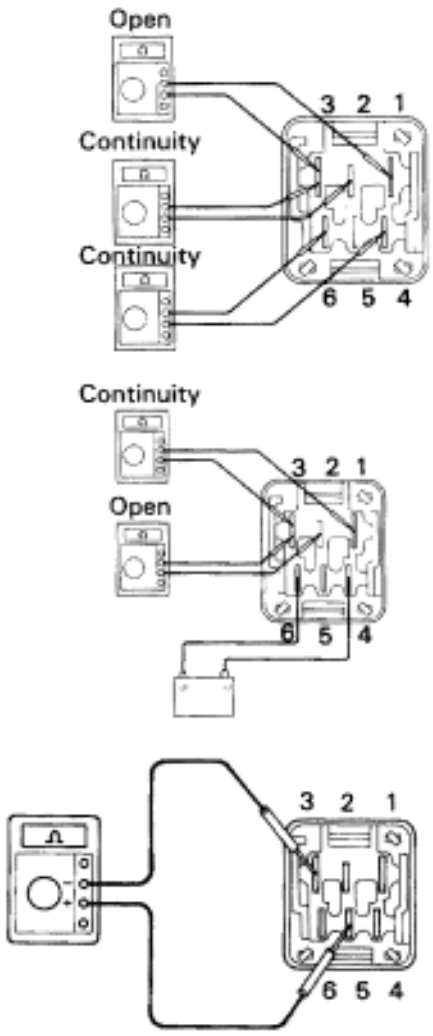

P Disconnect the connectors from R/B No.5.

C Check continuity between each terminal of ABS solenoid relay shown below.

OK

Terminals 4 and 6	Continuity (Reference value 80)
Terminals 2 and 3	Continuity
Terminals 1 and 3	Open

C
1. Apply battery positive voltage between terminals 4 and 6.
2. Check continuity between each terminal of ABS solenoid relay shown below.

OK

Terminals 2 and 3	Open
Terminals 1 and 3	Continuity

C Connect the ⊕ test lead to terminal 5 and the ⊖ lead to the terminal 3. Check continuity between the terminals.

OK **Continuity**
If there is no continuity, connect the ⊖ test lead to terminal 5 and the ⊕ lead to terminal 3. Recheck continuity between terminals.

OK

NG **Replace ABS solenoid relay.**

Repair or replace and check for open in harness and connector between DLC1 and ABS solenoid relay and body ground (See page IN–30).

3 **Is diagnostic trouble code output?**

Do diagnostic trouble code check on page BR–54.

NO

YES → **Repair circuit indicated by the code output.**

4 **Does ABS warning light go off if short pin is removed?**

YES

NO → **Check for short in harness and connector between warning light and DLC1 and ECU (See page IN–30).**

5 **Check ABS solenoid relay (See step No. 2).**

OK

NG → **Replace ABS solenoid relay.**

Repair or replace and check for short in harness and connector between DLC1 and ABS solenoid relay (See page IN–30).

Tc Terminal Circuit

CIRCUIT DESCRIPTION

Connecting terminals Tc and E1 of the DLC1 or the DLC2 causes the ECU to display the diagnostic trouble code by flashing the ABS warning light.

WIRING DIAGRAM

w/o TRAC

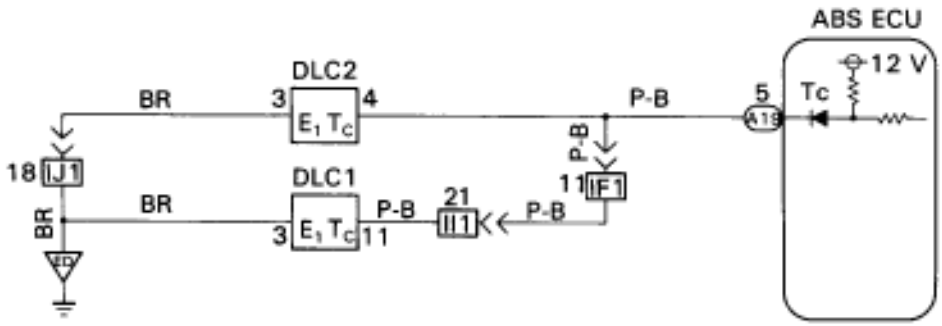

w/ TRAC

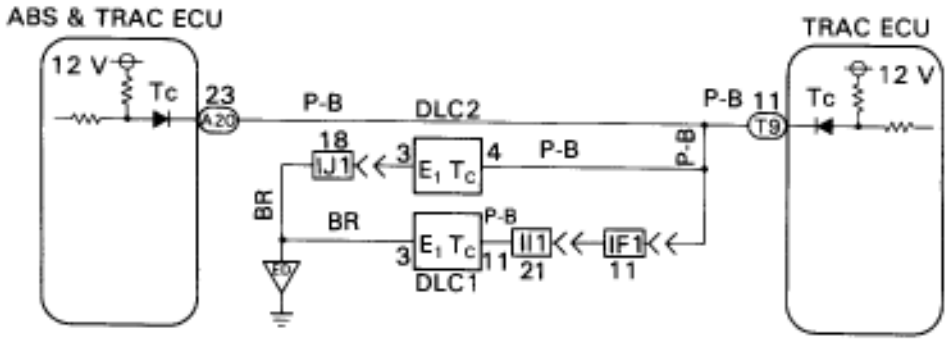

R07068
R07069

INSPECTION PROCEDURE.

1 Check voltage between terminals Tc and E1 of DLC2 or DLC1.

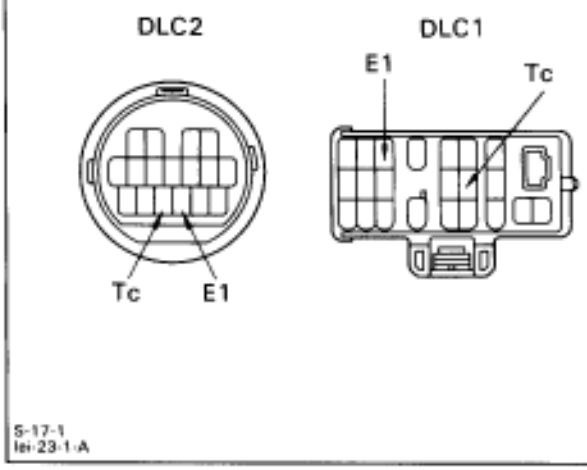

P Turn ignition switch ON.

C Measure voltage between terminals Tc and E1 of DLC2 or DLC1.

OK **Voltage: 10 – 14 V**

NG

OK → **If ABS warning light does not blink even after Tc and E1 are connected, the ECU may be defective.**

2 Check for open and short in harness and connector of systems connected to Tc terminal (See page IN–30).

OK

NG → **Repair or replace harness or connector.**

Check or replace ABS (& TRAC) ECU.

Ts Terminal Circuit

CIRCUIT DESCRIPTION

The sensor check circuit detects abnormalities in the speed sensor signal which cannot be detected with the diagnostic trouble code check.
Connecting terminals Ts and E1 of the DLC1 in the engine compartment starts the check.

WIRING DIAGRAM

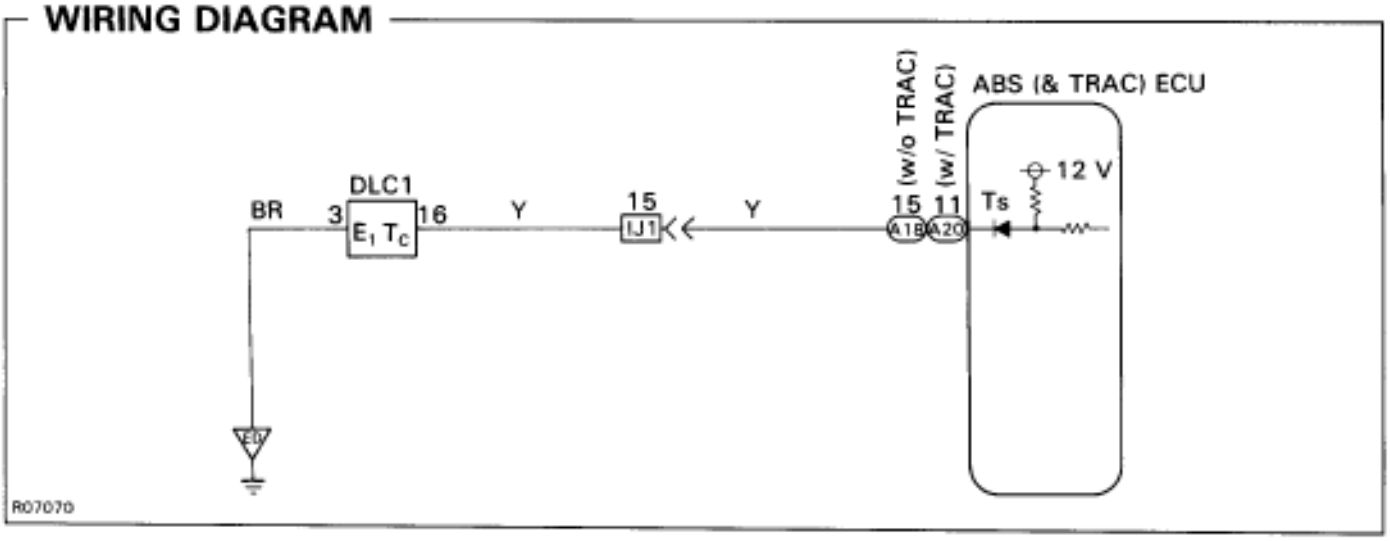

INSPECTION PROCEDURE.

1 **Check voltage between terminals Ts and E1 of DLC1.**

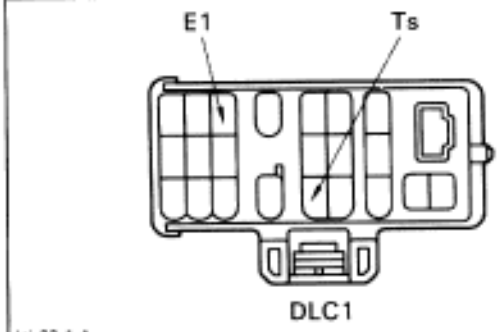

P Turn ignition switch ON.

C Measure voltage between terminals Ts and E1 of DLC1.

OK **Voltage: 10 – 14 V**

NG

OK: **If ABS warning light does not blink even after Ts and E1 are connected, the ECU may be defective.**

2 **Check for open and short in harness and connector between ABS (&TRAC) ECU and DLC1, DLC1 and body ground (See page IN–30).**

NG: **Repair or replace harness or connector.**

OK

Check and replace ABS (& TRAC) ECU.

Check for Fluid Leakage

Check for fluid leakage from actuator or hydraulic lines.

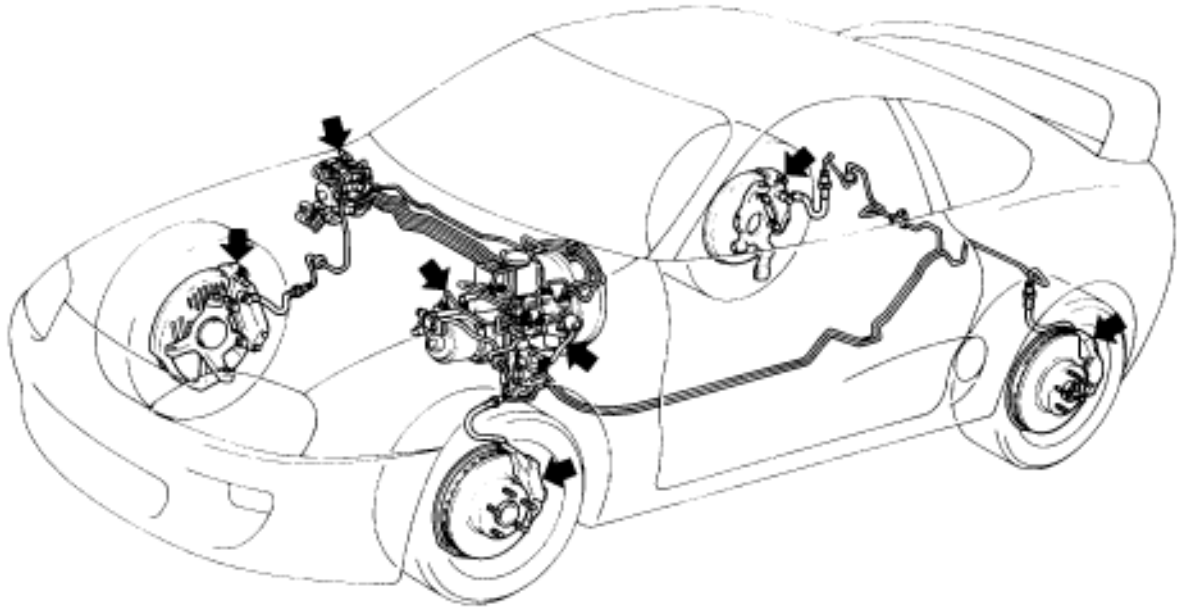

R07201

TRACTION CONTROL SYSTEM (TRAC)

TRAC PUMP COMPONENTS

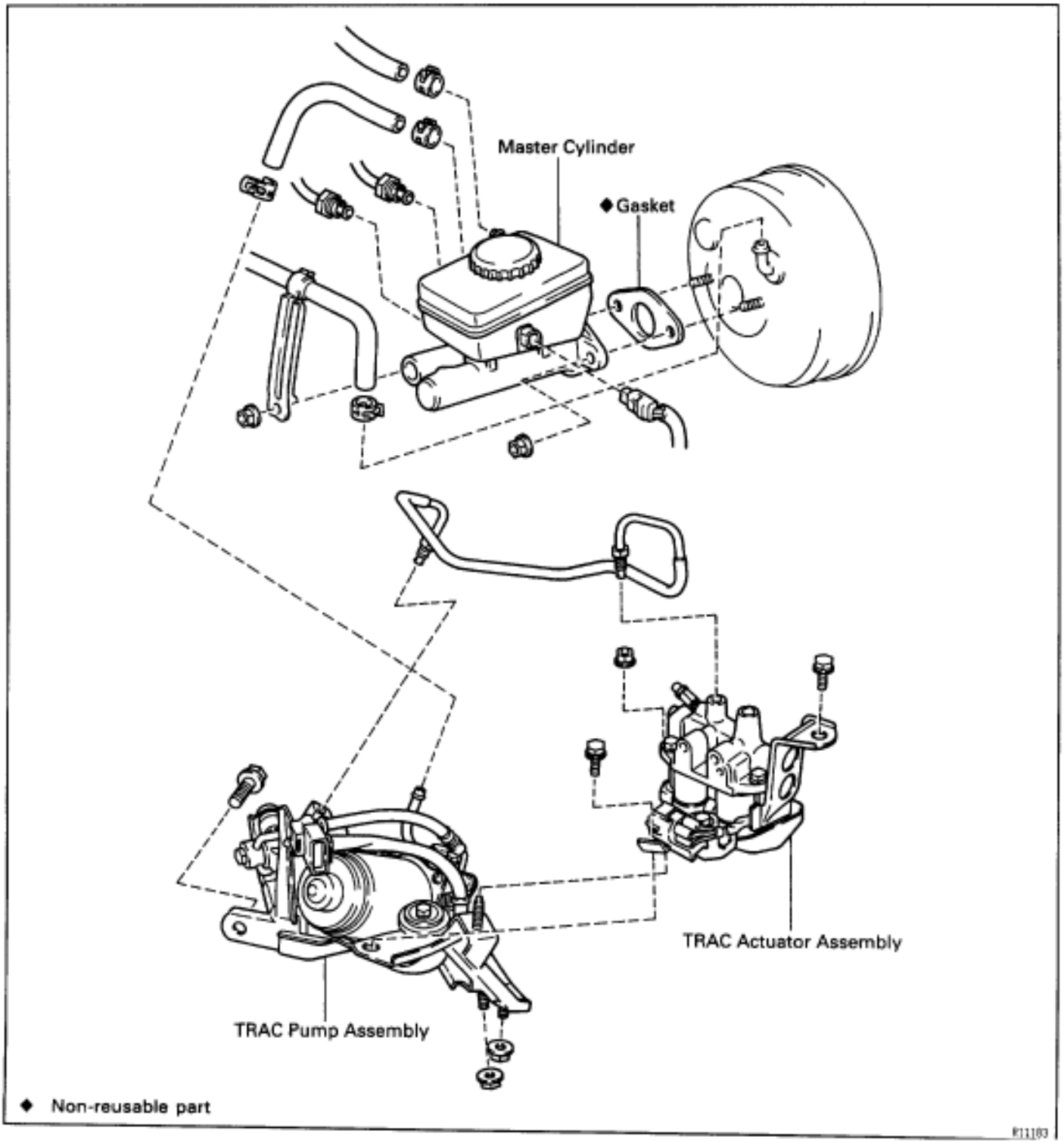

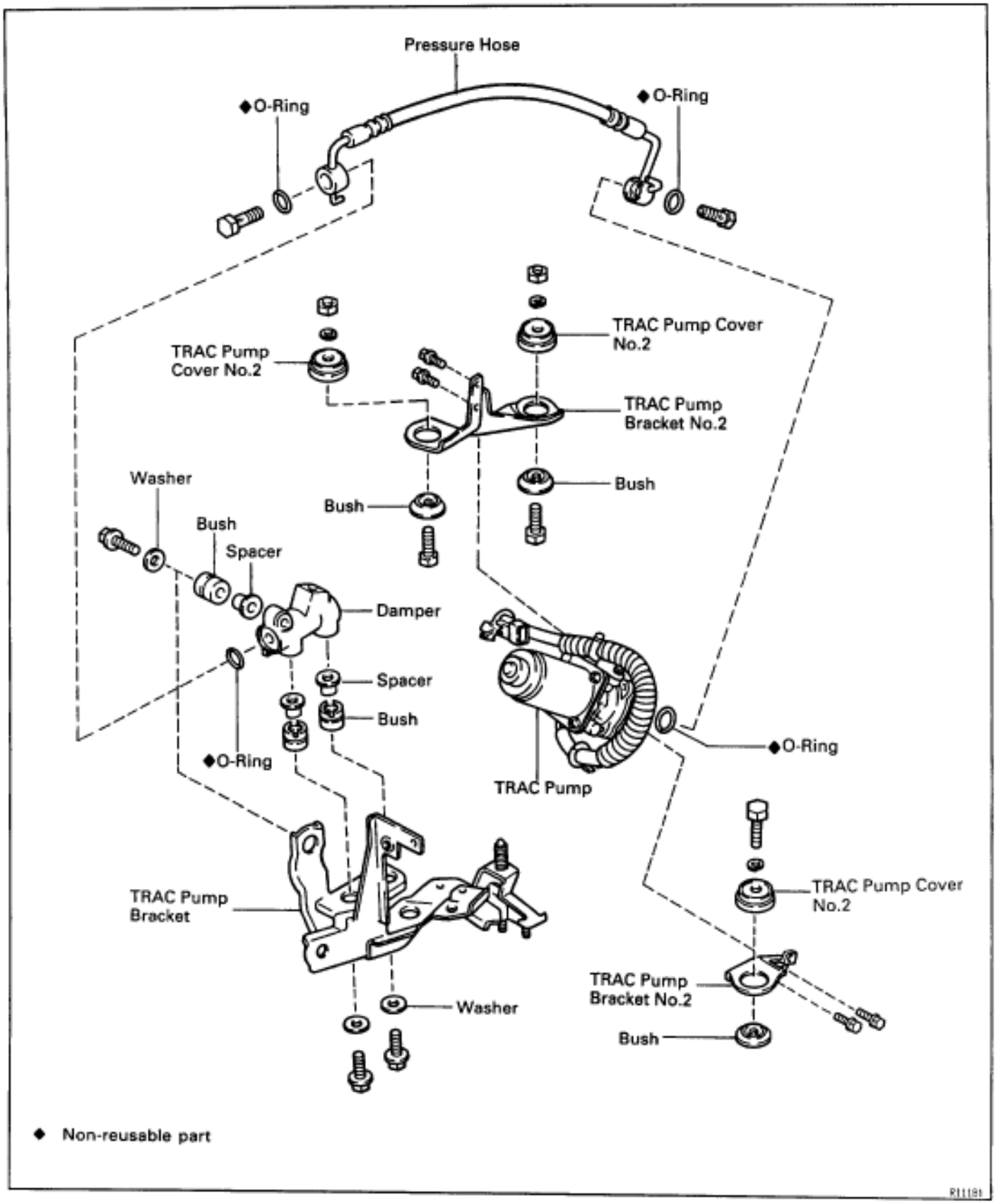
Pressure Hose
◆O-Ring
◆O-Ring
TRAC Pump Cover No.2
TRAC Pump Cover No.2
TRAC Pump Bracket No.2
Bush
Bush
Washer
Bush
Spacer
Damper
Spacer
Bush
◆O-Ring
TRAC Pump
◆O-Ring
TRAC Pump Bracket
TRAC Pump Cover No.2
TRAC Pump Bracket No.2
Bush
Washer
◆ Non-reusable part
R11181

TRAC PUMP REMOVAL

Installation is in the reverse order of removal.
AFTER INSTALLATION, BLEED BRAKE SYSTEM (See page BR–7) AND BLEED TRAC SYSTEM (See page BR–9)

1. **REMOVE TRAC ACTUATOR**
(See page BR–121)
2. **REMOVE BRAKE MASTER CYLINDER**
(See page BR–11)

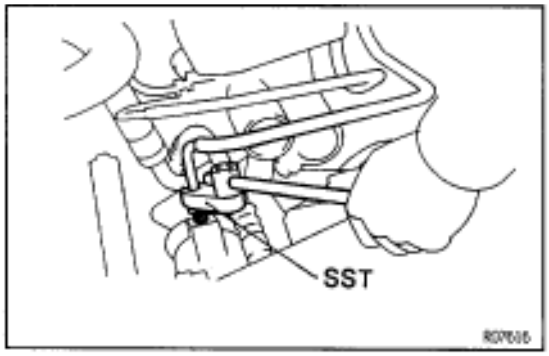

3. **DISCONNECT BRAKE LINE**
Using SST, disconnect the brake line from the damper.
SST 09023–00100
Torque: 15 N·m (155 kgf·cm, 11 ft·lbf)
4. **REMOVE TRAC PUMP ASSEMBLY**
Remove the bolt, 2 nuts and TRAC pump assembly.
Torque: 19 N·m (195 kgf·cm, 14 ft·lbf)
5. **REMOVE PRESSURE HOSE**
Remove the 2 union bolts, 4 O–rings and pressure hose.
Torque: 46 N·m (465 kgf·cm, 34 ft·lbf)
6. **REMOVE DAMPER**
Remove the 3 bolts, washers, bushings, spacers and damper.
Torque: 7.8 N·m (80 kgf·cm, 69 in.·lbf)
7. **REMOVE TRAC PUMP**
Remove the 3 bolts, 2 nuts, washers, TRAC pump bracket bushings and TRAC pump.
Torque: 7.8 N·m (80 kgf·cm, 69 in.·lbf)
8. **REMOVE TRAC PUMP BRACKET No.2**
Remove the 4 bolts and 2 TRAC pump bracket No.2.
Torque: 7.8 N·m (80 kgf·cm, 69 in.·lbf)

TRAC ACTUATOR COMPONENTS

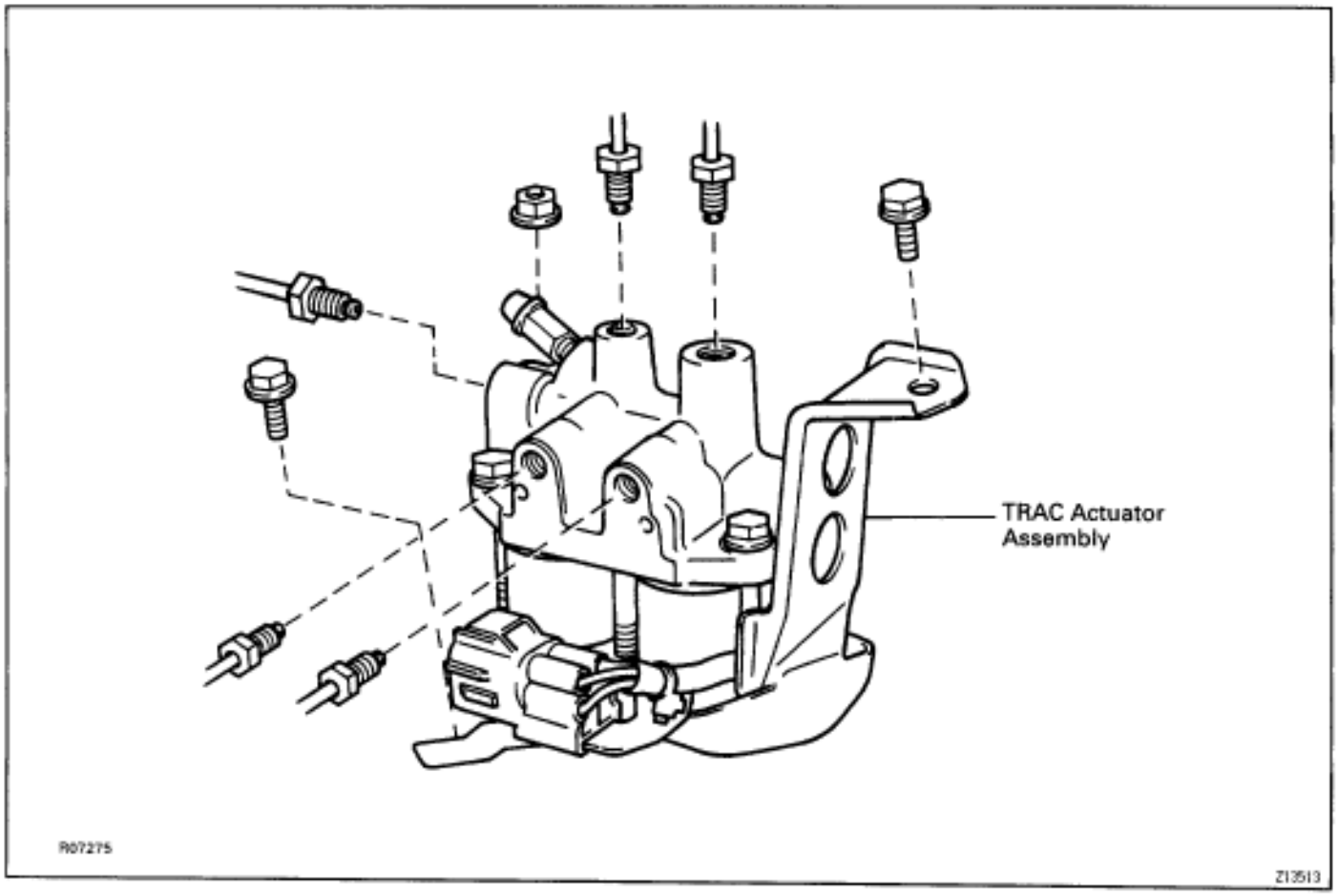

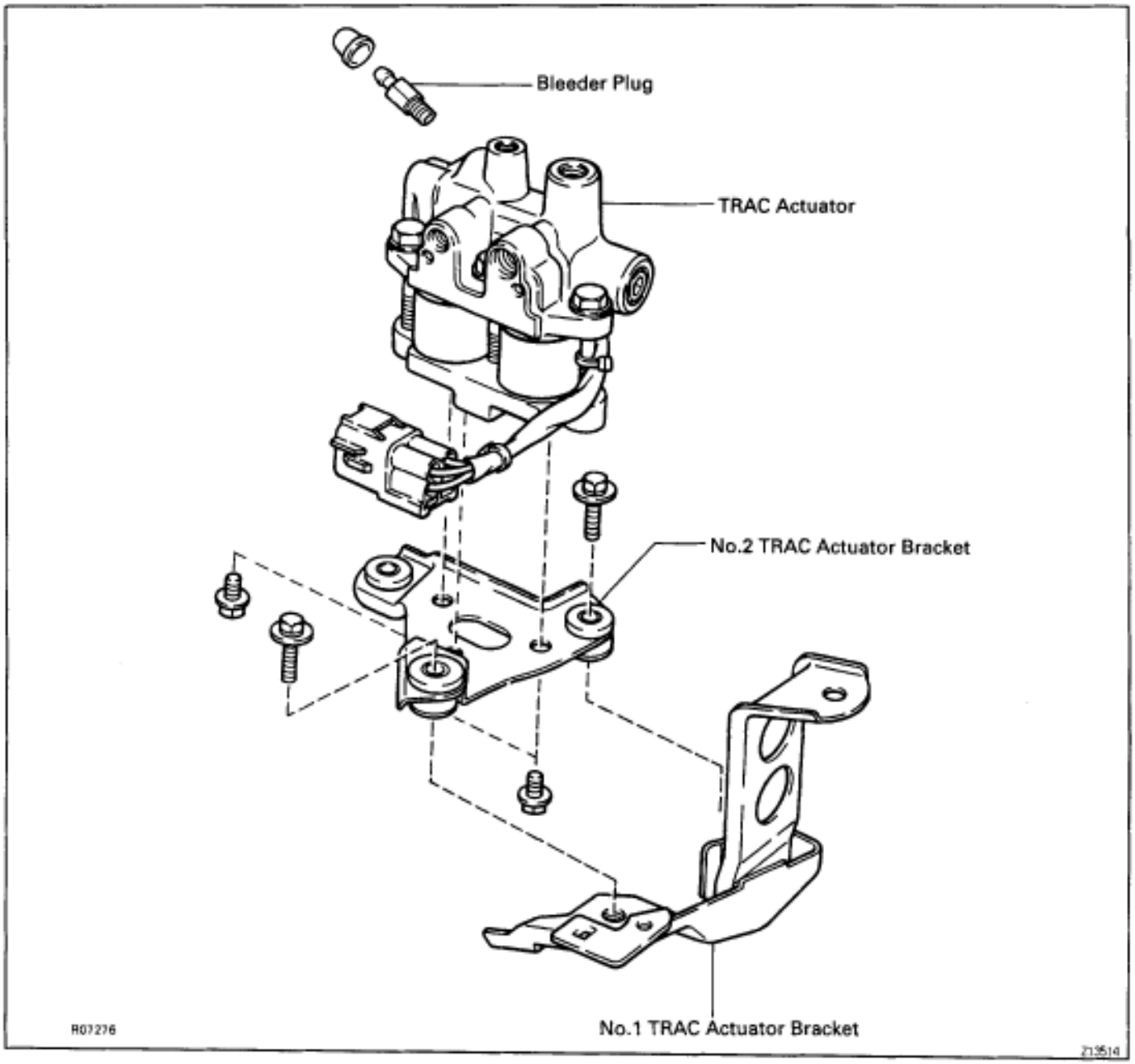
Bleeder Plug
TRAC Actuator
No.2 TRAC Actuator Bracket
No.1 TRAC Actuator Bracket
R07276
Z13514

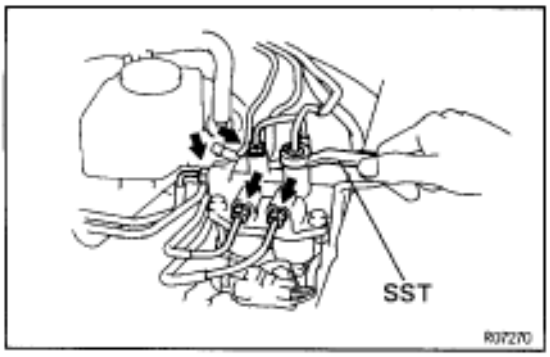

TRAC ACTUATOR REMOVAL

Installation is in the reverse order of removal.

AFTER INSTALLATION, BLEED BRAKE SYSTEM (See page BR–7) AND BLEED TRAC SYSTEM (See page BR–9)

1. **DISCONNECT BRAKE LINES**
   Using SST, disconnect the brake lines from the TRAC actuator.
   SST 09751–36011
   Torque: 15 N·m (155 kgf·cm, 11 ft·lbf)
2. **REMOVE TRAC ACTUATOR ASSEMBLY**
   Remove the 2 bolts, nut and TRAC actuator assembly.
   Torque: 13 N·m (130 kgf·cm, 9 ft·lbf)
3. **REMOVE TRAC ACTUATOR**
   Remove the 3 bolts and actuator from the bracket.
   Torque: 13 N·m (130 kgf·cm, 9 ft·lbf)
4. **SEPARATE TRAC ACTUATOR BRACKET**
   Remove the 2 bolts and separate the bracket.
   Torque: 13 N·m (130 kgf·cm, 9 ft·lbf)

–MEMO–

TROUBLESHOOTING

HOW TO PROCEED WITH TROUBLESHOOTING

Perform troubleshooting in accordance with the procedure on the following pages.

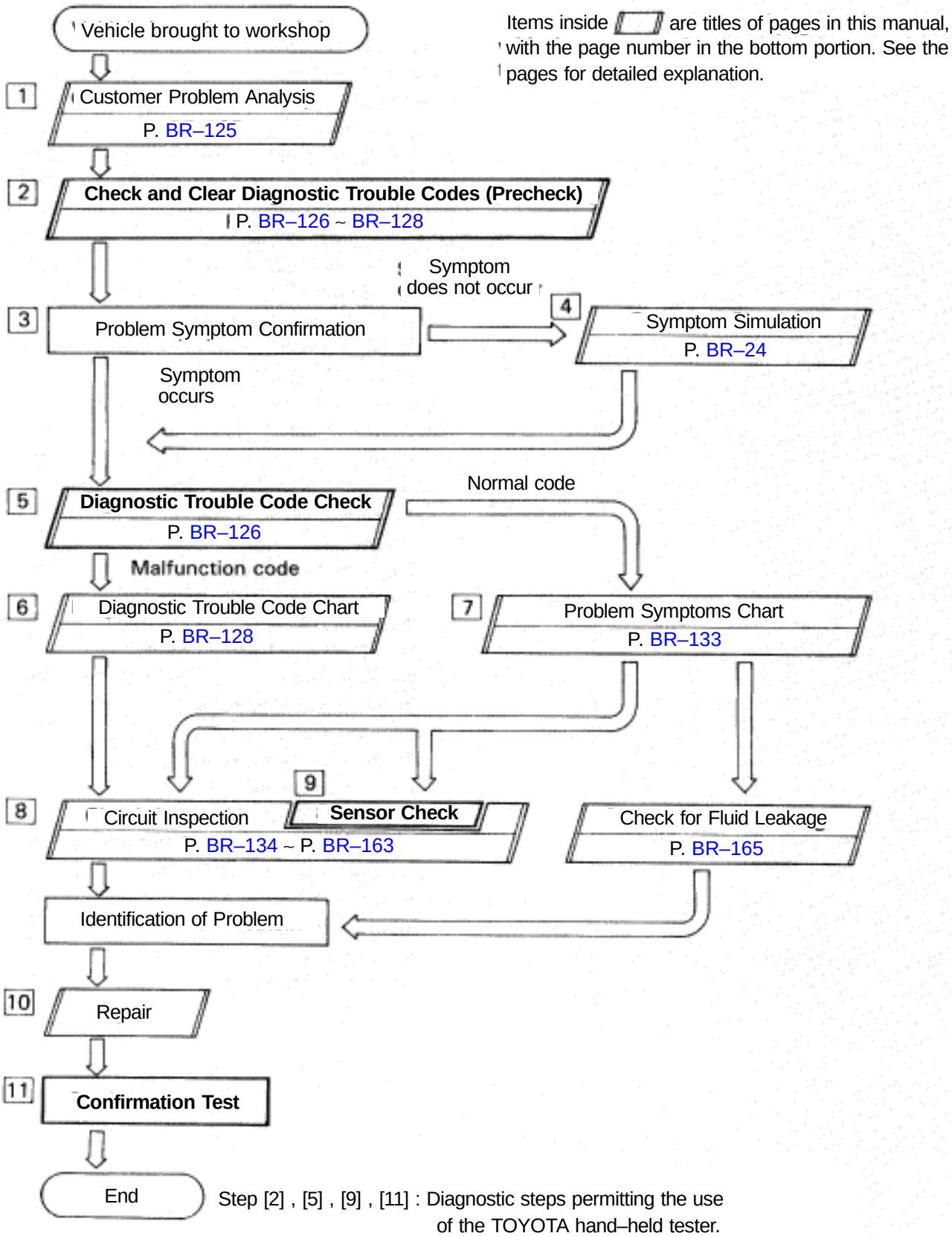

Step [2] , [5] , [9] , [11] : Diagnostic steps permitting the use of the TOYOTA hand–held tester.

CUSTOMER PROBLEM ANALYSIS CHECK SHEET

TRAC Check Sheet

Inspector's Name:

Customer's Name		**Registration No.**	
		Registration Year	/ /
		Frame No.	
Date Vehicle Brought In	/ /	**Odometer Reading**	km Miles

Date Problem First Occurred	/ /
Frequency Problem Occurs	☐ Continuous ☐ Intermittent (Times a day)

Symptoms	☐ TRAC does not operate. (Wheels spin when starting rapidly).	
	TRAC Indicator Light Abnormal	☐ Remains ON ☐ Blinks Does not Light Up
	TRAC OFF Indicator Light Abnormal	☐ Remains ON ☐ Does not Light Up

Check Item	**ABS Warning LIght**	☐ Normal ☐ Malfunction Code (Code)
	Malfunction Indicator Lamp	☐ Normal ☐ Malfunction Code (Code)

Diagnostic Trouble Code Check	1st Time	☐ Normal Code ☐ Malfunction Code (Code)
	2nd Time	☐ Normal Code ☐ Malfunction Code (Code)

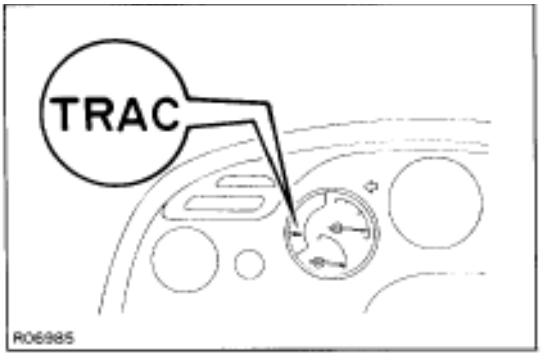

DIAGNOSIS SYSTEM INDICATOR CHECK

When the ignition switch is turned ON, check that the TRAC indicator light goes on for 3 seconds.

HINT: If the indicator check result is not normal, proceed to troubleshooting for the TRAC indicator light circuit (See page BR–162).

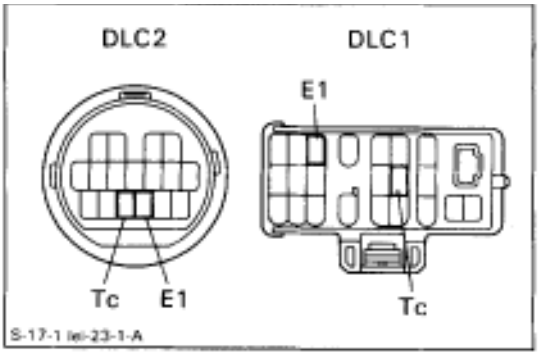

DIAGNOSTIC TROUBLE CODE CHECK

1. Turn the ignition switch ON.
2. Using SST connect terminals Tc and E1 of DLC2 or DLC1.
   SST 09843–18020
3. Read the diagnostic trouble code from the TRAC indicator light on the combination meter.
   HINT: If no code appears, inspect the diagnostic circuit or TRAC indicator light circuit (See page BR–162 or BR–163)
   As an example, the blinking patterns for normal code and code 32 are shown on the left.
4. Codes are explained in the code table on page BR–128.
5. After completing the check, disconnect terminals Tc and E1, and turn off the display.
   If 2 or more malfunctions are indicated at the same time, the lowest numbered diagnostic trouble code will be displayed first.

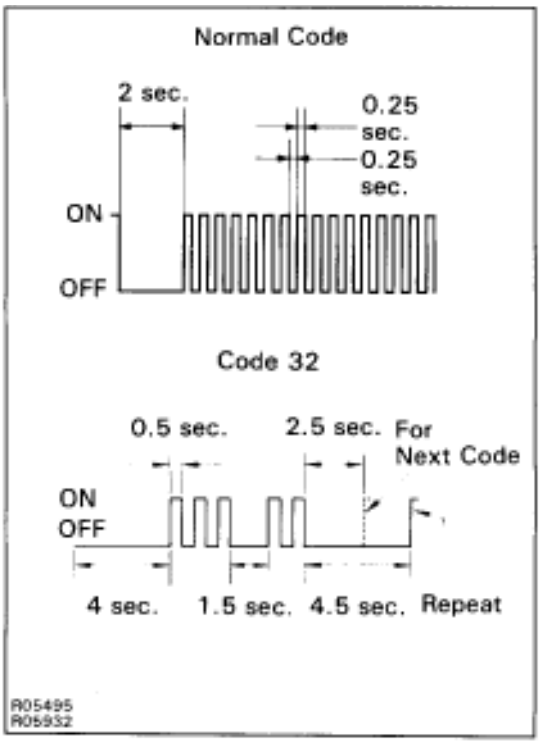

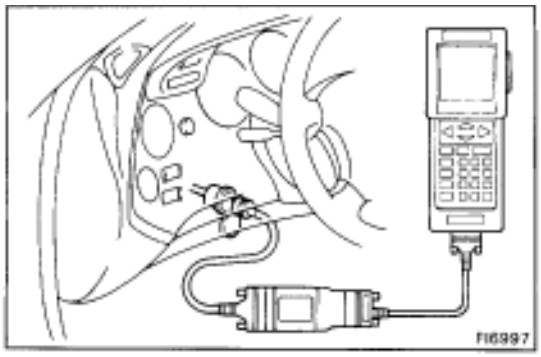

ECU DATA MONITOR USING TOYOTA HAND–HELD TESTER

1. Hook up the TOYOTA hand–held tester to the DLC2
2. Monitor the ECU data by following the prompts on the tester screen.
   HINT: TOYOTA hand–held tester has a ”Snapshot” function which records the monitored data.
   Please refer to the TOYOTA hand–held tester operator’s manual for further details.

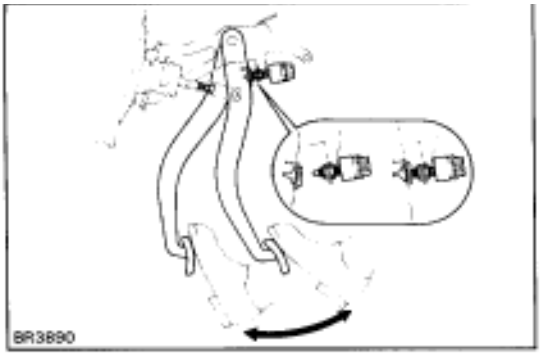

DIAGNOSTIC TROUBLE CODE CLEARANCE

1. Using SST, connect terminals Tc and E1 of DLC2 or DLC1.
   SST 09843–18020
2. IG switch ON.
3. Clear the diagnostic trouble codes stored in ECU by depressing the brake pedal 8 or more times within 3 seconds.
4. Check that the TRAC indicator light shows the normal code.
5. Remove the SST from the terminals of DLC2 or DLC1.
   HINT: Cancellation can also be done by removing the ECU–B fuse, but in this case, other memory systems will also be cancelled out.

DIAGNOSTIC TROUBLE CODE CHART

If a malfunction code is displayed during the diagnostic trouble code check, check the circuit listed for that code in the table below and proceed to the relevant page.

HINT: If the TRAC indicator light lights up and the TRAC indicator light does not blink when the DTC is checked, check the blinking pattern of the ABS warning light and troubleshoot the ABS system.

Code	TRAC Indicator Light Blinking Pattern	Diagnosis	See page
24		Open or short in sub–throttle actuator circuit	BR–134
25		Step motor does not move to a position decided by ECU	BR–137
26		Sub–throttle valve does not move even when the sub–throttle valve is controlled to fully open position by ECU	BR–137
31		Right front wheel speed sensor signal malfunction	BR–138
32	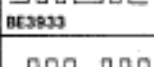	Left front wheel speed sensor signal malfunction	BR–138
33		Right rear wheel speed sensor signal malfunction	BR–138
34	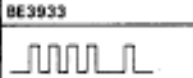	Left rear wheel speed sensor signal malfunction	BR–138
41	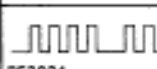	Low battery positive voltage or abnormally high battery positive voltage	BR–142
43*1		Malfunction in ABS or TRAC (BRAKE) control system	BR–145
44		Open or short in NE signal circuit	BR–147
45	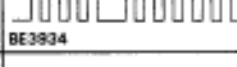	Main throttle position sensor circuit malfunction	BR–149
46*2	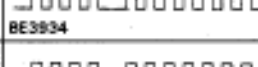	Open or short in main throttle position sensor circuit	BR–149
47	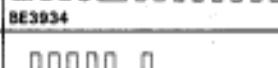	Sub–throttle position sensor circuit malfunction	BR–152
48		Open or short in sub–throttle position sensor circuit	BR–152
51*3		Engine & ECT system malfunction	BR–155
53*4	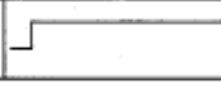	ECM communication circuit malfunction	BR–156
61	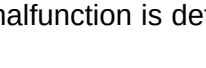	ABS & TRAC ECU communication circuit malfunction	BR–157
Always ON	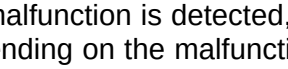	Malfunction in TRAC ECU	—

*1: If a malfunction is detected in ABS the TRAC OFF indicator light lights up instead of the TRAC indicator light.
*2: The TRAC indicator light does not light up even if an error is detected
*3: If a malfunction is detected, the TRAC OFF indicator light lights up instead of the TRAC indicator light.
*4: Depending on the malfunction, the TRAC indicator light does not light up.

PARTS LOCATION

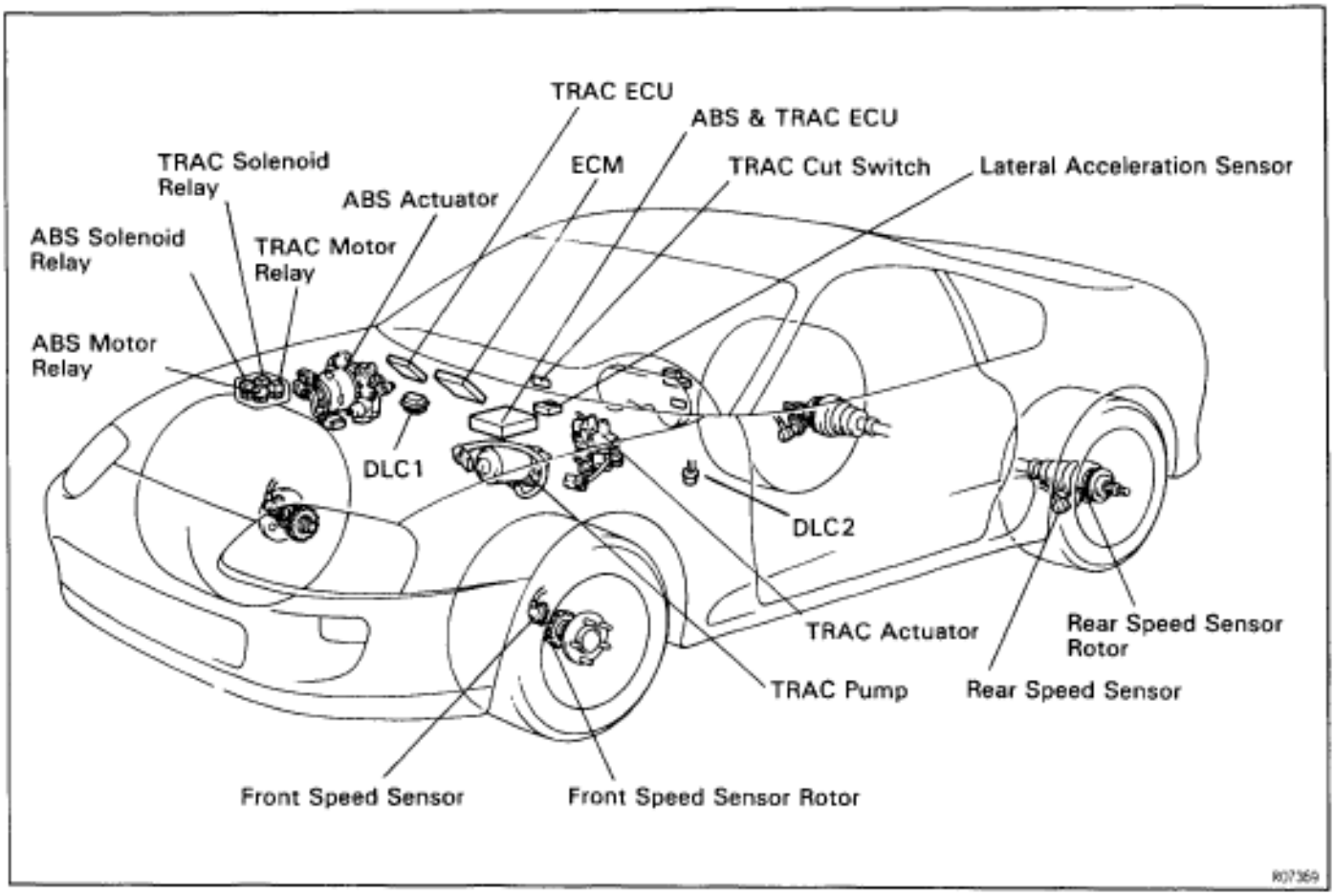

ECU TERMINALS STANDARD VALUE
ABS & TRAC ECU:

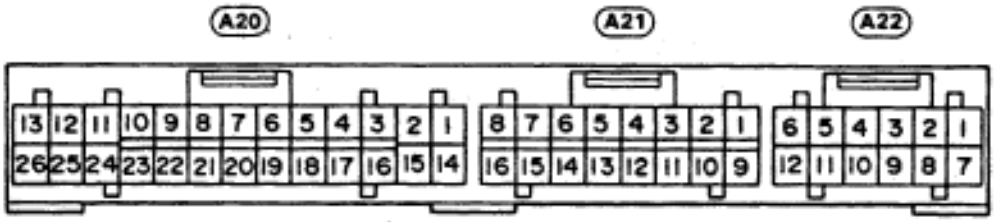

RO5698

Symbols (Terminals No.)			STD Voltage (V)	Condition
BAT (A20-7)	–	GND (A20-25)	10 – 14	Always
IG 1 (A20-24)	–	GND (A20-25)	10 – 14	IG switch ON
SR (A20-15)	–	R– (A20-12)	8.3 – 14	IG switch ON, ABS warning light OFF
MR (A20-2)	–	R– (A20-12)	Below 1.0	IG switch ON
TSR (A20-1)	–	R– (A20-12)	8.3 – 14	IG switch ON, TRAC and TRAC OFF indicator light OFF
TMR (A20-14)	–	R– (A20-12)	Below 1.0	IG switch ON
SFR (A22-1)	–	GND (A22-9)	10 – 14	IG switch ON, ABS warning light OFF
SFL (A20-13)	–	GND (A20-25)	10 – 14	IG switch ON, ABS warning light OFF
SRR (A20-26)	–	GND (A20-25)	10 – 14	IG switch ON, ABS warning light OFF
SRL (A22-7)	–	GND (A22-9)	10 – 14	IG switch ON, ABS warning light OFF
AST (A20-21)	–	GND (A20-25)	10 – 14	IG switch ON, ABS warning light OFF
SMC (A22-2)	–	GND (A22-9)	10 – 14	IG switch ON, TRAC and TRAC OFF indicator light OFF
SRC (A22-8)	–	GND (A22-9)	10 – 14	IG switch ON, TRAC and TRAC OFF indicator light OFF
WA (A22-5)	–	GND (A22-4)	Below 2.0	IG switch ON, ABS warning light ON
			10 – 14	IG switch ON, ABS warning light OFF
PKB (A22-12)	–	GND (A22-4)	Below 1.5	IG switch ON, PKB switch ON Fluid in M/C reservoir above MIN level.
			10 – 14	IG switch ON, PKB switch OFF Fluid in M/C reservoir above MIN level.
LBL (A20-10)	–	GND (A20-25)	10 – 14	IG switch ON Fluid in M/C reservoir above MIN level.
STP (A22-6)	–	GND (A22-4)	Below 1.5	Stop light switch OFF
			8 – 14	Stop light switch ON
D/G (A22-10)	–	GND (A22-9)	10 – 14	IG switch ON, ABS warning light OFF

Symbols (Terminal No.)			STD Voltage (V)	Conditions
Tc (A20-23)	–	GND (A20-25)	10 – 14	IG switch ON
Ts (A20-11)	–	GND (A20-25)	10 – 14	IG switch ON
FR + (A20-17)	–	FR – (A20-4)	10 – 14	IG switch ON Slowly turn right front wheel.
FL + (A20-5)	–	FL – (A20-18)	AC generation	IG switch ON Slowly turn left front wheel.
RR + (A21-2)	–	RR – (A21-10)	AC generation	IG switch ON Slowly turn right rear wheel.
RL + (A21-9)	–	RL – (A21-1)	AC generation	IG switch ON Slowly turn left rear wheel.
FRO (A21-13)	–	GND (A22-4)	Pulse generation	IG switch ON Slowly turn right front wheel.
FLO (A21-15)	–	GND (A22-4)	Pulse generation	IG switch ON Slowly turn left front wheel.
RRO (A21-6)	–	GND (A22-4)	Pulse generation	IG switch ON Slowly turn right rear wheel.
RLO (A21-4)	–	GND (A22-4)	Pulse generation	IG switch ON Slowly turn left rear wheel.
GS 1 (A20-8)	–	GND (A20-25)	4 – 6 or 7 – 11	IG switch ON, Vehicle parked on a level surface
GS 2 (A20-20)	–	GND (A20-25)	4 – 6	IG switch ON, Vehicle parked on a level surface
EXO (A21-12)	–	GND (A22-4)	10 – 14	IG switch ON

TRAC ECU:

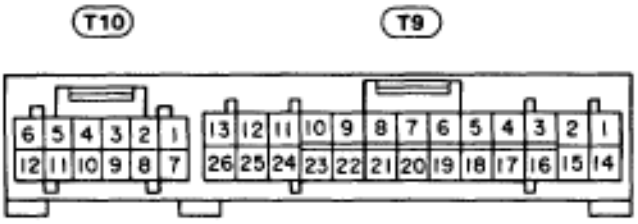

RO6997

Symbols (Terminals No.)	STD Voltage (V)	Condition
BAT (T9-12) – GND (T9-14)	10 – 14	Always
BM (T9-13) – GND (T9-14)	10 – 14	Always
IG1 (T9-26) – GND (T9-14)	10 – 14	IG switch ON
ACM (T10-6) – GND (T9-14)	10 – 14	5 seconds after IG switch ON Sub throttle valve fully open
A (T10-4) – GND (T9-14)	10 – 14	5 seconds after IG switch ON Sub throttle valve fully open
$\overline{A}$ (T10-5) – GND (T9-14)	10 – 14	5 seconds after IG switch ON Sub throttle valve fully open
BCM (T10-12) – GND (T9-14)	10 – 14	5 seconds after IG switch ON Sub throttle valve fully open
B (T10-10) – GND (T9-14)	10 – 14	5 seconds after IG switch ON Sub throttle valve fully open
$\overline{B}$ (T10-11) – GND (T9-14)	10 – 14	5 seconds after IG switch ON Sub throttle valve fully open
IDL1 (T10-1) – GND (T9-14)	Below 1.0	Engine idling, Main throttle valve fully closed
	10 – 14	Engine idling, Main throttle valve fully open
IDL2 (T10-7) – GND (T9-14)	Below 1.0	IG switch ON, Sub throttle valve fully closed
	10 – 14	IG switch ON, Sub throttle valve fully open
NEO (T9-10) – GND (T9-14)	Pulse generation	Idling
CSW (T9-5) – GND (T9-14)	Below 1.5	IG switch ON, TRAC cut switch pushed in
	10 – 14	IG switch ON, TRAC cut switch released
PKB (T9-18) – GND (T9-14)	Below 1.5	IG switch ON, PKB switch ON Fluid in M/C reservoir above MIN level
	10 – 14	IG switch ON, PKB switch OFF Fluid in M/C reservoir above MIN level
IND (T9-24) – GND (T9-14)	10 – 14	IG switch ON, TRAC indicator light ON
WT (T9-23) – GND (T9-14)	Below 2.0	IG switch ON, TRAC OFF indicator light ON
	10 – 14	IG switch ON, TRAC OFF indicator light OFF
STP (T9-3) – GND (T9-14)	Below 1.5	Stop light switch OFF
	8 – 14	Stop light switch ON
T_C (T9-11) – GND (T9-14)	10 – 14	IG switch ON
FRO (T9-20) – GND (T9-14)	Pulse generation	IG switch ON Slowly turn right front wheel
FLO (T9-6) – GND (T9-14)	Pulse generation	IG switch ON Slowly turn left front wheel
RRO (T9-19) – GND (T9-14)	Pulse generation	IG switch ON Slowly turn right rear wheel
RLO (T9-7) – GND (T9-14)	Pulse generation	IG switch ON Slowly turn left rear wheel

PROBLEM SYMPTOMS CHART

If a normal code is displayed during the diagnostic trouble code check but the problem still occurs, check the circuits for each problem symptom in the order given in the table below and proceed to the relevant troubleshooting page.

Symptoms	Inspection Circuit	See page
TRAC does not operate.	Only when 1. ~ 5, are all normal and the problem is still occurring, replace the TRAC ECU. 1. Check the diagnostic trouble code, reconfirming that the Normal code is output 2. IG power source circuit. 3. Check the hydraulic circuit for leakage. 4. Speed sensor circuit. 5. Park/neutral position switch circuit.	 **BR–126** **BR–142** **BR–165** **BR–138** **AT1–81 or AT2–101**
TRAC indicator light abnormal.	1. TRAC indicator light circuit. 2. TRAC ECU.	**BR–162**
TRAC OFF indicator light abnormal.	Only when 1. and 2. are all normal and the problem is still occurring, replace the TRAC ECU. 1. TRAC OFF indicator light circuit. 2. TRAC cut switch circuit.	 **BR–159** **BR–159**
Diagnostic trouble code check cannot be performed.	Only when 1. and 2, are all normal and the problem is still occurring, replace the TRAC ECU. 1. TRAC indicator light circuit 2. Tc terminal circuit.	 **BR–162** **BR–163**

CIRCUIT INSPECTION

DTC 24 TRAC Sub–Throttle Actuator Circuit

CIRCUIT DESCRIPTION

The sub–throttle actuator operates in accordance with signals from the ECU, controlling the opening and closing of the sub–throttle valve.

DTC No.	Diagnostic Trouble Code Detecting Condition	Trouble area
24	Open or short in sub–throttle actuator circuit.	• TRAC fuse • Open or short in BM circuit. • Sub–throttle actuator. • Open or short in sub–throttle actuator circuit. • ECU

WIRING DIAGRAM

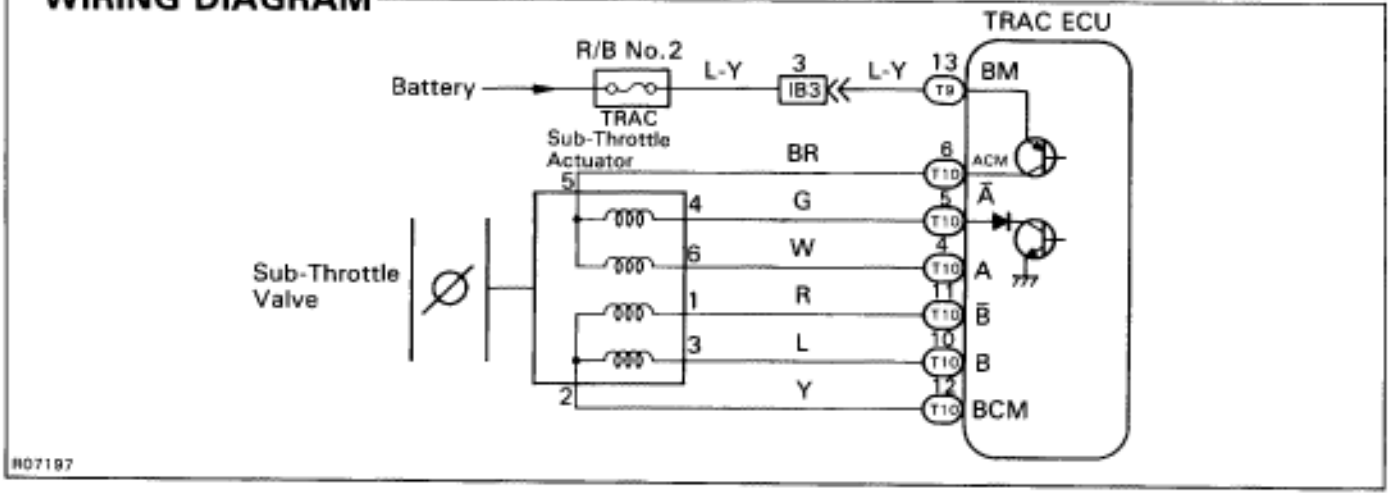

INSPECTION PROCEDURE

1 Check TRAC fuse.

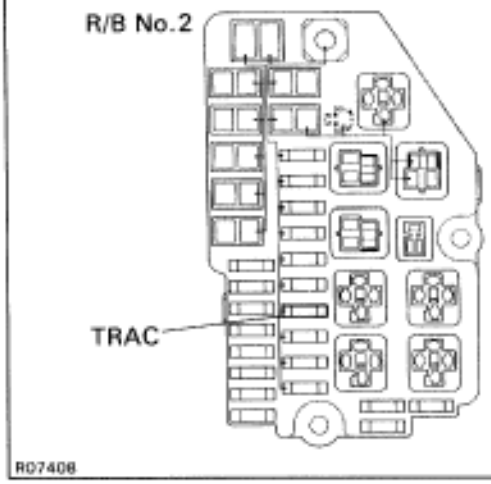

P Remove TRAC fuse from R/B No.2.

C Check continuity of TRAC fuse.

OK **Continuity**

OK

NG Check for short in all harness and components connected to TRAC fuse.

2 Check voltage between terminals BM and GND of TRAC ECU.

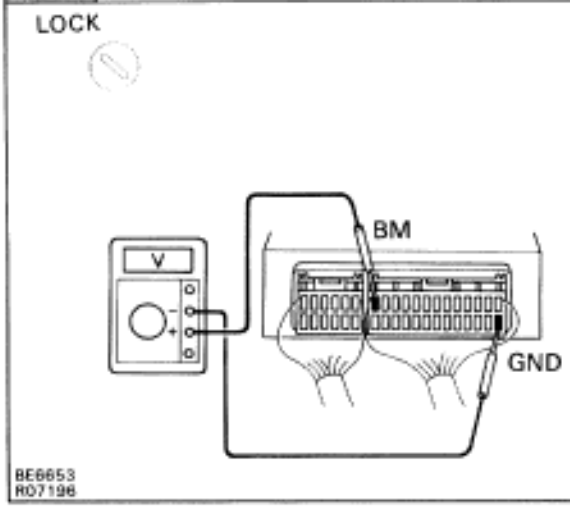

P Remove TRAC ECU with connectors still connected.

C Measure voltage between terminals BM and GND of TRAC ECU.

OK **Voltage: 10 – 14 V**

OK

NG Check and repair harness or connector.

3 **Check sub–throttle actuator.**

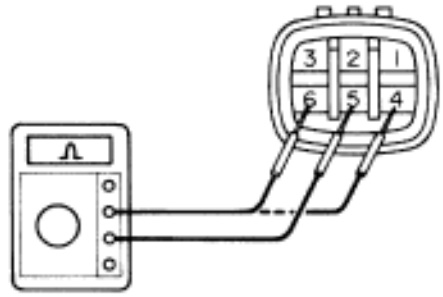

The illustration shows checking for continuity between 4 – 5, and 5 – 6.

RC6199

P Disconnect sub–throttle actuator connector.

C Check continuity between each terminal of sub–throttle actuator connector shown below.

OK

Terminals 1 and 2	Continuity (Reference value 0.9)
Terminals 2 and 3	
Terminals 4 and 5	
Terminals 5 and 6	

OK

NG → **Replace sub–throttle actuator.**

4 **Check for open and short in harness and connector between TRAC ECU and sub–throttle actuator (See page IN–30).**

OK

NG → **Repair or replace harness or connector.**

Check and replace TRAC ECU.

DTC 25 26 TRAC Sub–Throttle Valve

DTC No.	Diagnostic Trouble Code Detecting Condition	Trouble area
25	The difference between the sub–throttle sensor signal voltage and the voltage required by the step count is 1 V or more.	Sub–throttle actuator. Throttle body (sub–throttle valve is stuck or operation is faulty). Sub–throttle position sensor. Open or short in sub–throttle position sensor cir–cuit. ECM TRAC ECU
26	Even when sub–throttle valve is driven to the fully open position, input voltage at terminal VTA2 of ECM does not come within range of the specifications 3–4.5 V.	Sub–throttle actuator. Throttle body (sub–throttle valve is stuck or operation is faulty). Sub–throttle position sensor. Open or short in sub–throttle position sensor cir cuit. ECM TRAC ECU



P Remove air duct.

C Open and close the sub–throttle valve manually and check the condition during operation.

OK **The valve should operate smoothly without catching.**

HINT: If sub throttle actuator, sub–throttle valve, sub–throttle posi–tion sensor and harness are free from any defect, ECM may be defective.
If ECM is free from any defect, TRAC ECU may be defec–tive.

DTC 31 32 33 34 Speed Sensor Circuit

CIRCUIT DESCRIPTION

The speed sensor detects the wheel speed and sends the appropriate signals to the ECU. These signals are used to control both the ABS and TRAC control systems. The front and rear rotors each have 48 serrations. When the rotors rotate, the magnetic field emitted by the permanent magnet in the speed sensor generates an AC voltage. Since the frequency of this AC voltage changes in direct proportion to the speed of the rotor, the frequency is used by the ECU to detect the speed of each wheel.

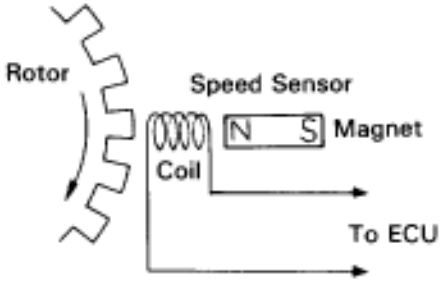

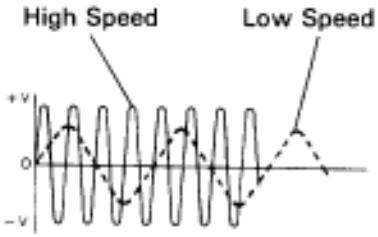

BR3583
BR3582

DTC No.	Diagnostic Trouble Code Detecting Condition	Trouble area
31, 32 33, 34	Detection of any of conditions (1) through (3): (1) At vehicle speed of 10 km/h (6 mph) or more, pulses are not input for 5 sec. (2) Momentary interruption of the vehicle speed sensor signal occurs at least 7 times in the time between switching the ignition switch ON and switching it OFF. (3) Abnormal fluctuation of speed sensor signals with the vehicle speed 20 km/h (12 mph) or more.	• Right front, left front, right rear and left rear speed sensor. • Open or short in each speed sensor circuit. • ECU

HINT: DTC No.31 is for the right front speed sensor.
DTC No.32 is for the left front speed sensor.
DTC No.33 is for the right rear speed sensor.
DTC No.34 is for the left rear speed sensor.

WIRING DIAGRAM

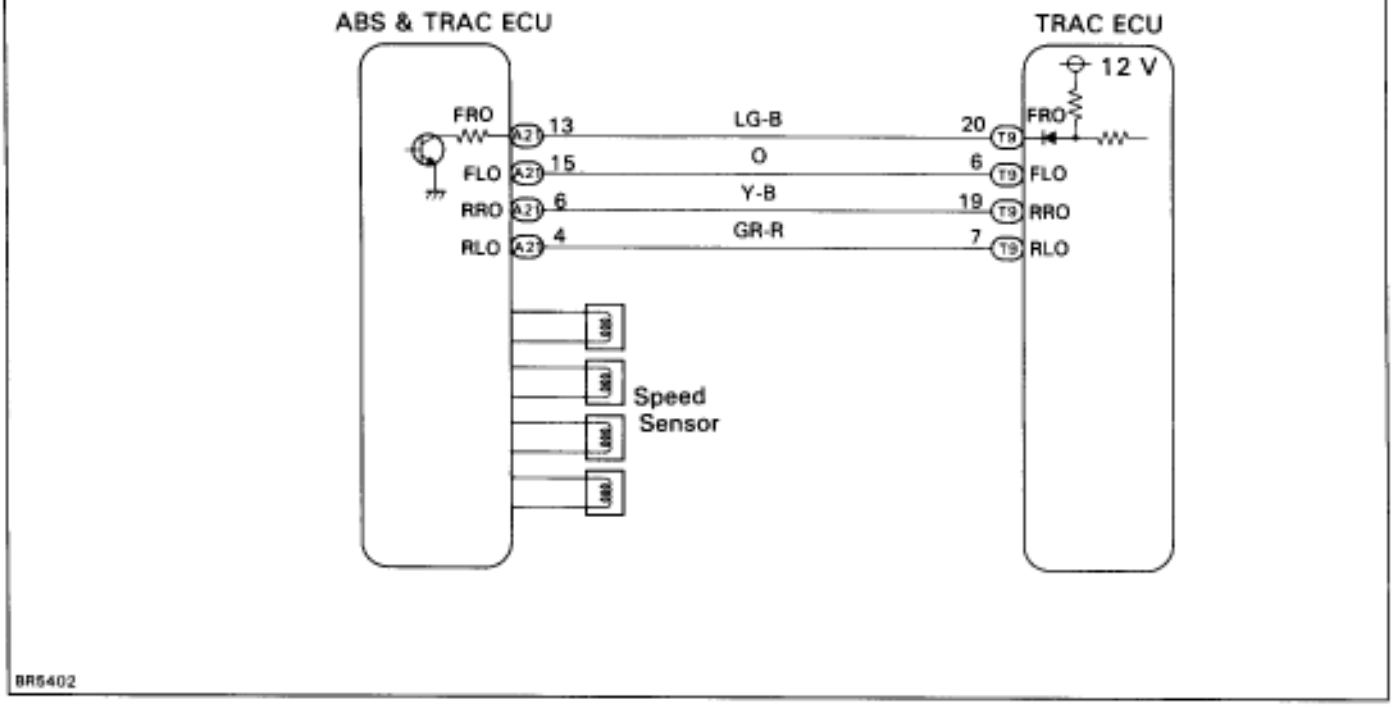

INSPECTION PROCEDURE

HINT: If the same code is output from the ABS warning light, troubleshoot the ABS first.

1 **Check for open and short in harness and connector between terminals FRO, FLO, RRO, RLO of ABS & TRAC ECU and TRAC ECU (See page IN–30).**

OK

NG → Repair or replace harness or connector.

2 **Check speed sensor.**

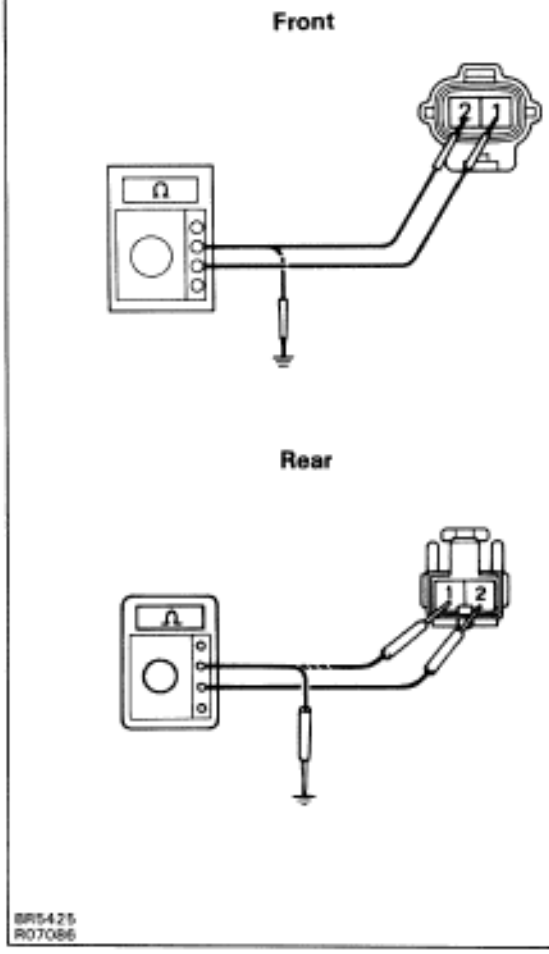

Front

P
1. Remove front fender splash shield.
2. Disconnect speed sensor connector.

C Measure resistance between terminals 1 and 2 of speed sensor connector.

OK **Resistance: 0.7 – 1.7 k**

C Measure resistance between terminals 1 and 2 of speed sensor connector and body ground.

OK **Resistance: 1 M or higher**

Rear

P
1. Remove rear seat cushion, seat back and quarter trim panel.
2. Disconnect speed sensor connector.

C Measure resistance between terminals 1 and 2 of speed sensor connector.

OK **Resistance: 0.7 – 1.7 k**

C Measure resistance between terminals 1 and 2 of speed sensor connector and body ground.

OK **Resistance: 1 M or higher**

OK

NG → Replace speed sensor.

NOTICE: Check the speed sensor signal last (See page BR–62).

3 **Check for open and short in harness and connector between each speed sensor and ECU (See page IN–30).**

OK

NG → Repair and replace harness or connector.

4 Check sensor rotor and sensor installation.

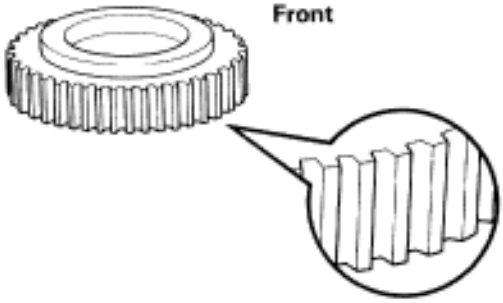

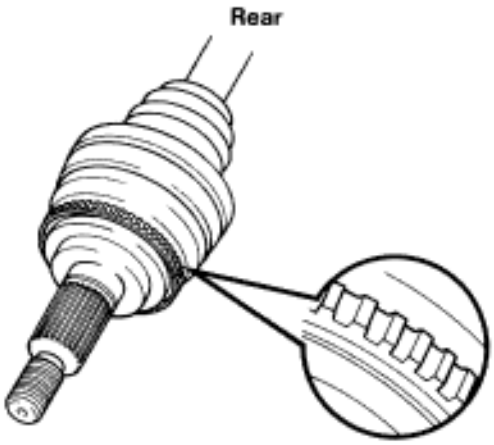

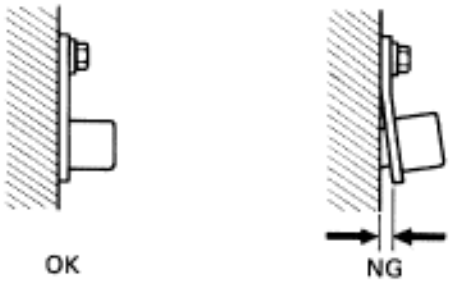

BR3719
BR3720
BR3795

Front

P Remove front speed sensor rotor (See page SA–15).

C Check sensor rotor serrations.

OK **No scratches or missing teeth.**

C Check the front speed sensor installation.

OK **The installation bolt is tightened properly.**

Rear

P Remove the drive shaft (See page SA–45).

C Check the sensor rotor serrations.

OK **No scratches or missing teeth.**

C Check the rear speed sensor installation.

OK **The installation bolt is tightened properly and there is no clearance between the sensor and rear axle carrier.**

OK

NG **Replace speed sensor or rotor.**

NOTICE: Check the speed sensor signal last (See page BR–62).

Check and replace ABS (& TRAC) ECU.

DTC 41 IG Power Source Circuit

CIRCUIT DESCRIPTION

This is the power source for the ECU, hence the CPU and the actuators.

DTC No.	Diagnostic Trouble Code Detecting Condition	Trouble area
41	When either of the following (1) or (2) is detected: (1) Voltage at ECU terminal IG1 is less than 9.5 V for more than 10 sec. while engine speed is 500 RPM or higher. (2) Voltage at ECU terminal IG1 is more than 17 V for more than 5 sec.	Battery IC regulator Open or short in power source circuit ECU

WIRING DIAGRAM

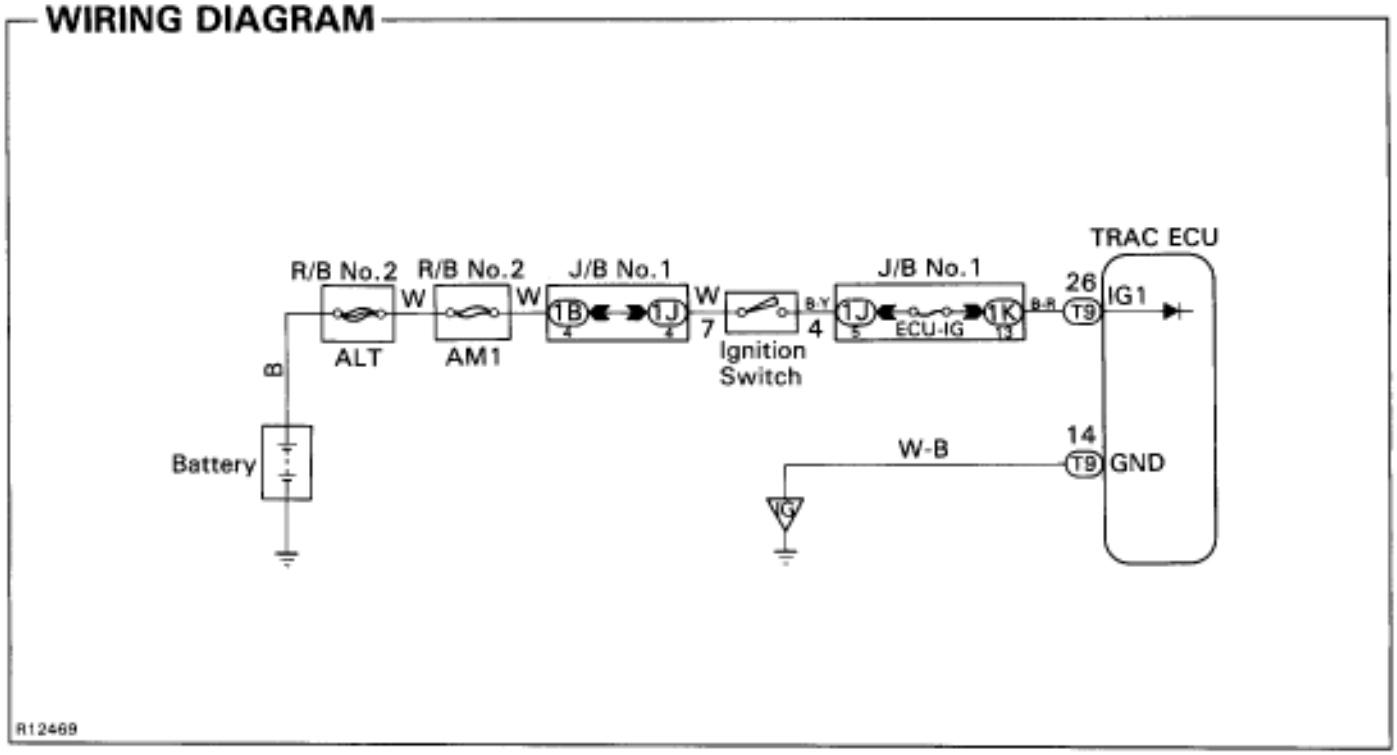

INSPECTION PROCEDURE

1 **Check battery positive voltage.**

OK **Voltage: 10 – 14 V**

OK → **NG** → **Check and repair the charging system.**

2 **Check voltage between terminals IG1 and GND of TRAC ECU connector.**

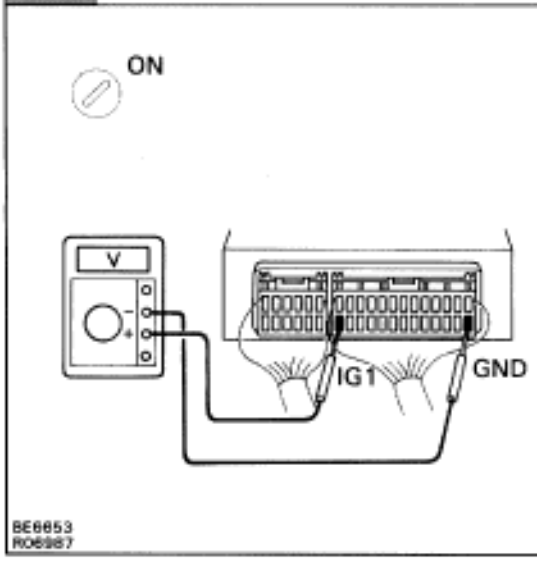

P
1. Remove TRAC ECU with connectors still connected.
2. Turn ignition switch ON.

C Measure voltage between terminals IG1 and GND of TRAC ECU connector.

OK **Voltage: 10 – 14 V**

NG → **OK** → Check and replace TRAC ECU.

3 **Check continuity between terminal GND of TRAC ECU connector and body ground.**

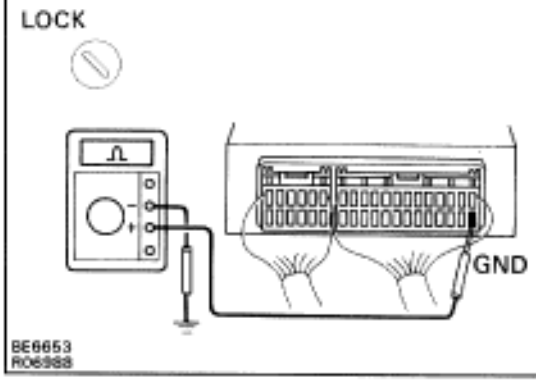

C Measure resistance between terminal GND of TRAC ECU connector and body ground.

OK **Resistance: 1 Ω or less**

OK → **NG** → Repair or replace harness or connector.

4 Check ECU–IG fuse.

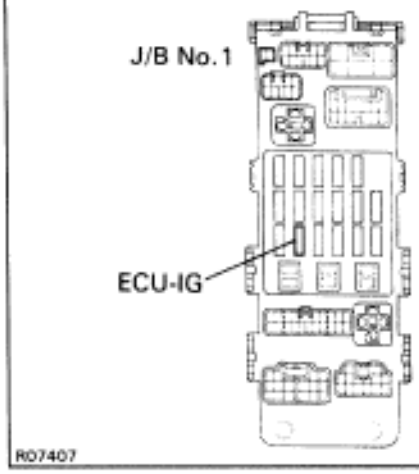

P Remove ECU–IG fuse from J/B No. 1.

C Check continuity of ECU–IG fuse.

OK **Continuity**

OK

Check for open in harness and connector between TRAC ECU and battery (See page **IN–30**).

NG

Check for short in all the harness and components connected to ECU–IG fuse.

DTC 43 ABS & TRAC ECU Malfunction

CIRCUIT DESCRIPTION

DTC No.	Diagnostic Trouble Code Detecting Condition	Trouble area
43	ABS control system or TRAC (BRAKE) control system or communication circuit is abnormal.	ABS & TRAC ECU Open or short in BRFA circuit

WIRING DIAGRAM

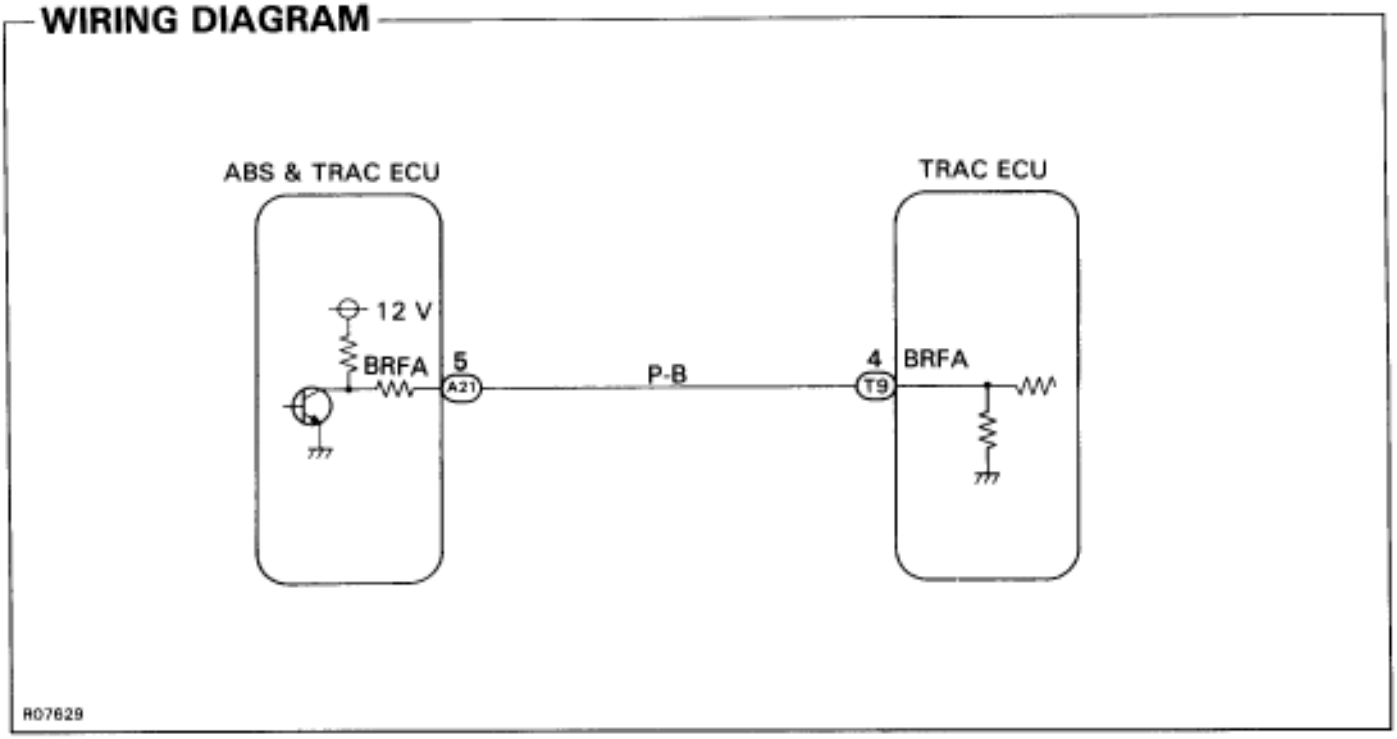

INSPECTION PROCEDURE

1 **Is diagnostic trouble code output for the ABS & TRAC (BRAKE)?**

Perform diagnostic trouble code check on page BR–128.

NO

YES Repair circuit indicated by the code output.

2 Check voltage between terminal BRFA of TRAC ECU and body ground.

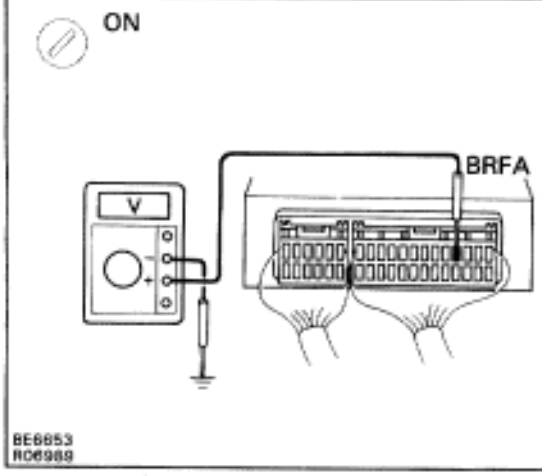

P
1. Remove TRAC ECU with connectors still connected.
2. Turn ignition switch ON.

C Measure voltage between terminal BRFA of TRAC ECU and body ground.

OK **Voltage: About 6 V (Pulse)**

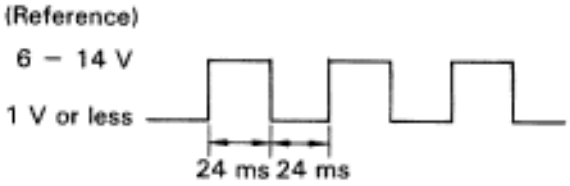

NG → OK: Check and replace TRAC ECU.

3 Check voltage between terminal BRFA of TRAC ECU and body ground with TRAC ECU connector disconnected.

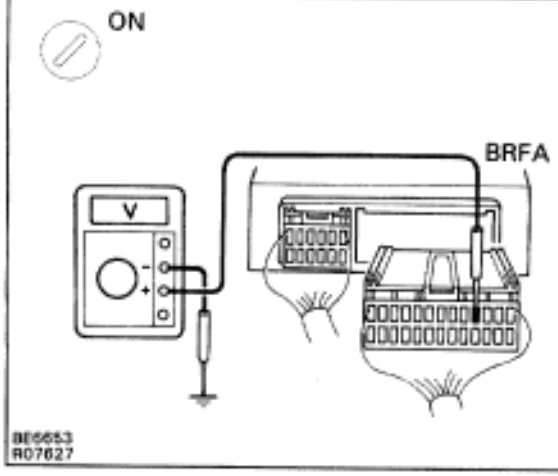

P Disconnect TRAC ECU connector.

C Measure voltage between terminal BRFA of TRAC ECU connector and body ground.

HINT: Measure voltage within 8 seconds from the time TRAC ECU connector is disconnected.

OK **Voltage: See step 1.**

NG → OK: Check and replace TRAC ECU.

4 Check for open and short in harness and connector between ABS & TRAC ECU and TRAC ECU (See page IN–30).

OK → Check and replace ABS & TRAC ECU.

NG: Repair or replace harness or connector.

DTC 44 NE Signal Circuit

CIRCUIT DESCRIPTION

The TRAC ECU receives engine speed signals (NE signals) from the ECM.

DTC No.	Diagnostic Trouble Code Detecting Condition	Trouble area
44	No signal is input to terminal NEO 0.24 sec. after traction control is initiated.	Open or short in NEO circuit ECM TRAC ECU

WIRING DIAGRAM

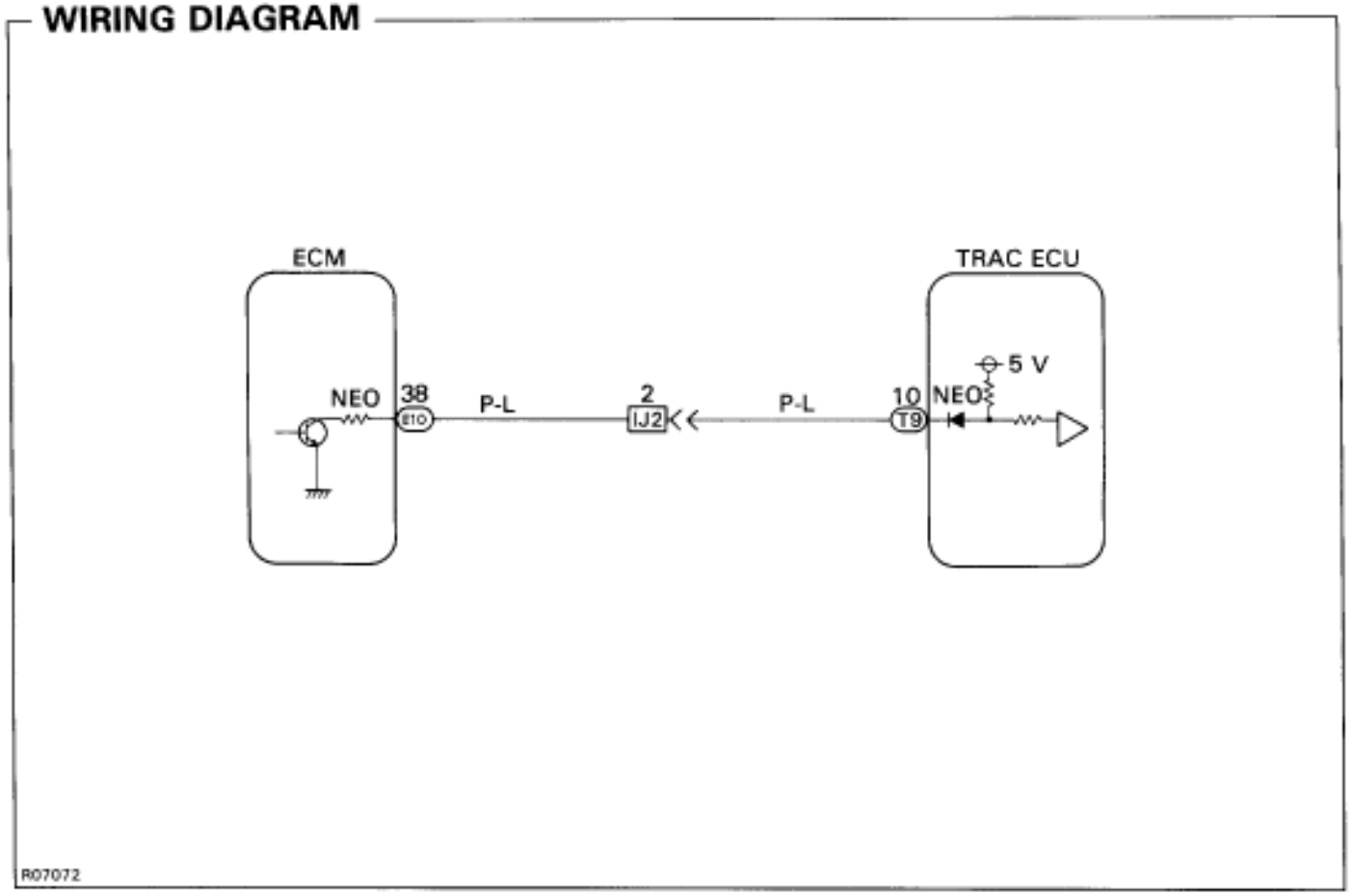

INSPECTION PROCEDURE

1 **Check for open and short in harness and connector between terminal NEO of TRAC ECU and terminal NEO of ECM (See page IN–30).**

OK

NG → **Repair or replace harness or connector.**

2 **Check voltage between terminal NEO of TRAC ECU and body ground.**

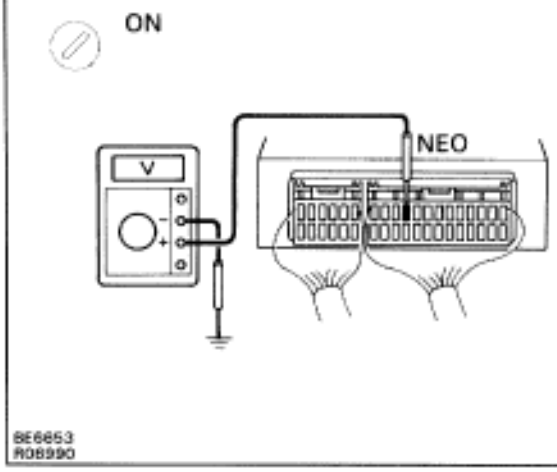

P
1. Remove TRAC ECU with connectors still connected.
2. Turn ignition switch ON.

C Measure voltage between terminal NEO of TRAC ECU and body ground for the engine conditions below

OK

Engine condition	Voltage
OFF (IG ON)	4 – 6 V or Below 1 V
ON (Idling)	2 – 3 V (Pulse)

OK

NG → **Check and replace TRAC ECU or ECM.**

If the same code is still output after the diagnostic code is deleted, check the contact condition of each connection.

DTC 45 46 Main Throttle Position Sensor Circuit

CIRCUIT DESCRIPTION

This circuit is not directly related to the TRAC control, but as it has an influence on TRAC control when trouble occurs in this circuit, it is used to switch off the TRAC system as a fail safe function.

DTC No.	Diagnostic Trouble Code Detecting Condition	Trouble area
45	Conditions (1) and (2) continue for 0.31 sec.: (1) CTP switch of main throttle position sensor is ON. (2) Input voltage of ECM terminal VTA1: 1.5 V or more.	Main throttle position sensor Short in IDL1 circuit ECM TRAC ECU
46	Either of the following (1) or (2) continues for 0.6 sec.: (1) Input voltage of ECM terminal VTA1: 4.9 V or more. (2) Input voltage of ECM terminal VTA1: 0.1 V or less.	Main throttle position sensor Open or short in VTA1 circuit ECM

WIRING DIAGRAM

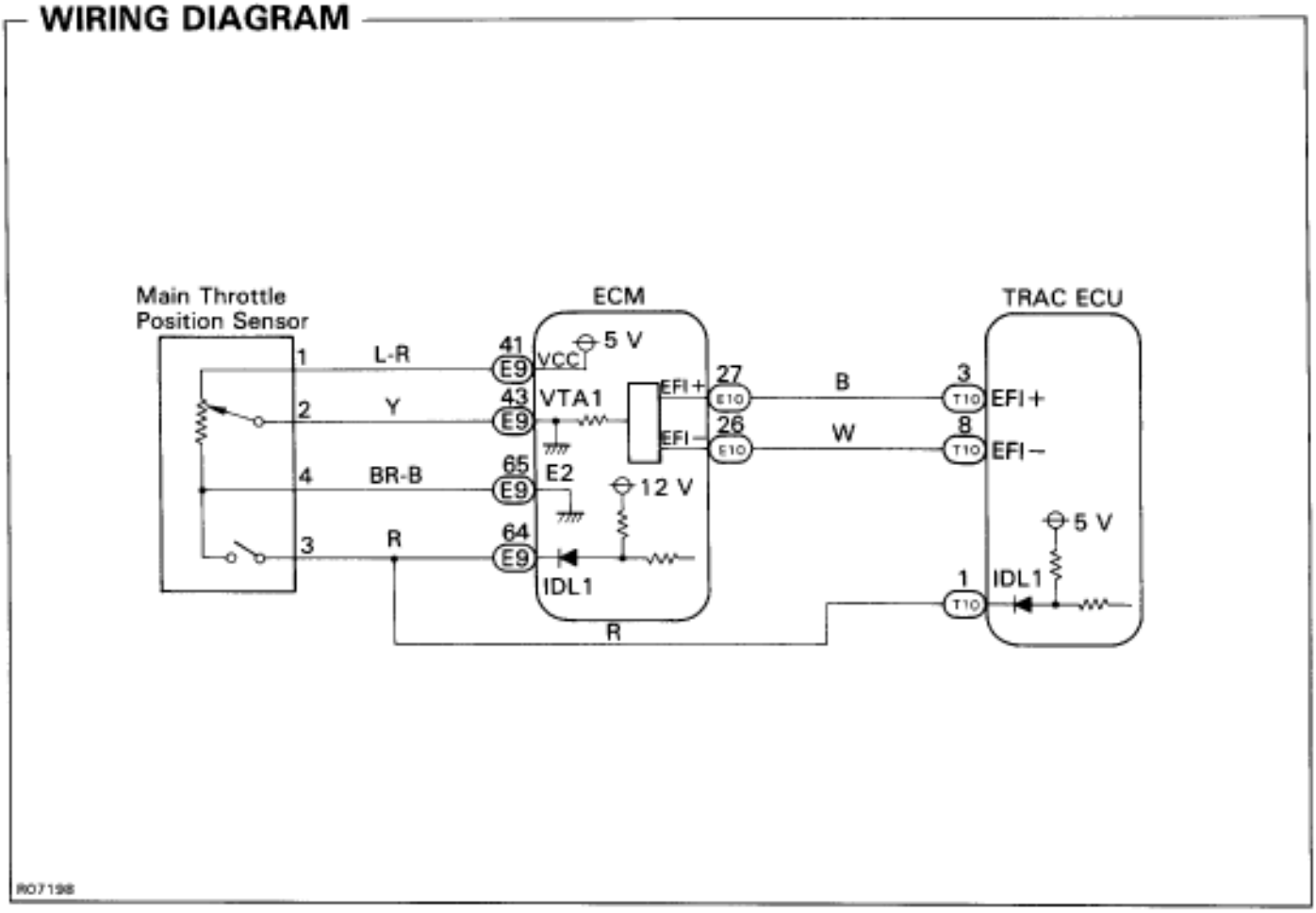

INSPECTION PROCEDURE

HINT: The main throttle position sensor signal is transmitted to the TRAC ECU from ECM, so if an error occurs at the engine side, the TRAC ECU also detects it.
If diagnostic trouble code No.41 is being output for the engine troubleshoot the engine first.

1 **Is diagnostic trouble code output for the engine?**

Do diagnostic trouble code check on page **EG–491**.

NO

YES → **Repair circuit indicated by the code output.**

2 **Check voltage between terminal IDL1 of TRAC ECU and body ground.**

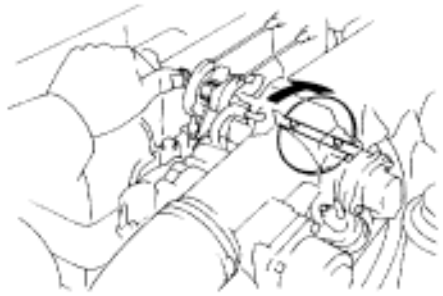

ON

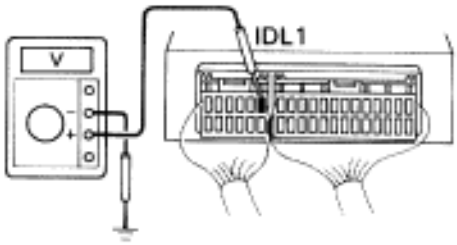

R06991
BE8653
R06992

P
1. Remove TRAC ECU with connectors still connected.
2. Disconnect the vacuum hose from the throttle opener, and apply the vacuum to the throttle opener.
3. Turn ignition switch ON.

C
Measure voltage between terminal IDL1 of TRAC ECU and body ground, when the main throttle valve is fully closed and fully open.

OK

Main throttle valve position	Voltage
Fully closed	Below 1.0 V
Fully open	10 – 14 V

NG

OK → **Go to step 6**.

3 Check for open and short in harness and connector between terminal IDL1 of TRAC ECU and main throttle position sensor with TRAC ECU, ECM and main throttle position sensor connectors disconnected (See page IN–30).

- OK
- NG → Repair or replace harness or connector.

4 Check for short in harness between terminal IDL1 of TRAC ECU and body ground with only main throttle position sensor connector connected (See page IN–30).

- OK
- NG → Check and replace main throttle position sensor.

5 Check for short in harness between terminal IDL1 of TRAC ECU and body ground with only ECM connector connected (See page IN–30).

- OK
- NG → Check and replace ECM.

Check and replace TRAC ECU.

6 Check voltage of terminal VTA1 of ECM (See page EG–554).

- NG
- OK → Check and replace ECM.

7 Check for open and short in harness and connector between terminal VTA1 of ECM and main throttle position sensor (See page IN–30).

- OK
- NG → Repair or replace harness or connector.

8 Check main throttle position sensor (See page EG–555).

- OK
- NG → Adjust or replace main throttle position sensor See page EG–292).

Check and replace ECM.

DTC 47 48 Sub–Throttle Position Sensor Circuit

CIRCUIT DESCRIPTION

This sensor detects the opening angle of the sub–throttle valve and sends the appropriate signals to the ECU. If a trouble signal is input, the ECU prohibits TRAC control.

DTC No.	Diagnostic Trouble Code Detecting Condition	Trouble area
47	When any of the following (1) through (3) is detected: (1) Deviation of 5 steps or more to the closed side of the idle step during sub–throttle initial check. (2) Voltage at terminal IDL2 does not become 0 V even after sub–throttle is driven to fully closed position during sub–throttle initial check. (3) Voltage at terminal VTA2 of ECM is 1.5 V or more for at least 0.31 sec. while CTP switch is ON.	Sub–throttle position sensor Open or short in IDL2 circuit ECM TRAC ECU
48	Either of the following (1) or (2) continues for at least 0.26 sec.: (1) Input voltage of ECM terminal VTA2: 4.9 V or more (2) Input voltage of ECM terminal VTA2: 0.1 V or less.	Sub–throttle position sensor Open or short in VTA2 circuit ECM

WIRING DIAGRAM

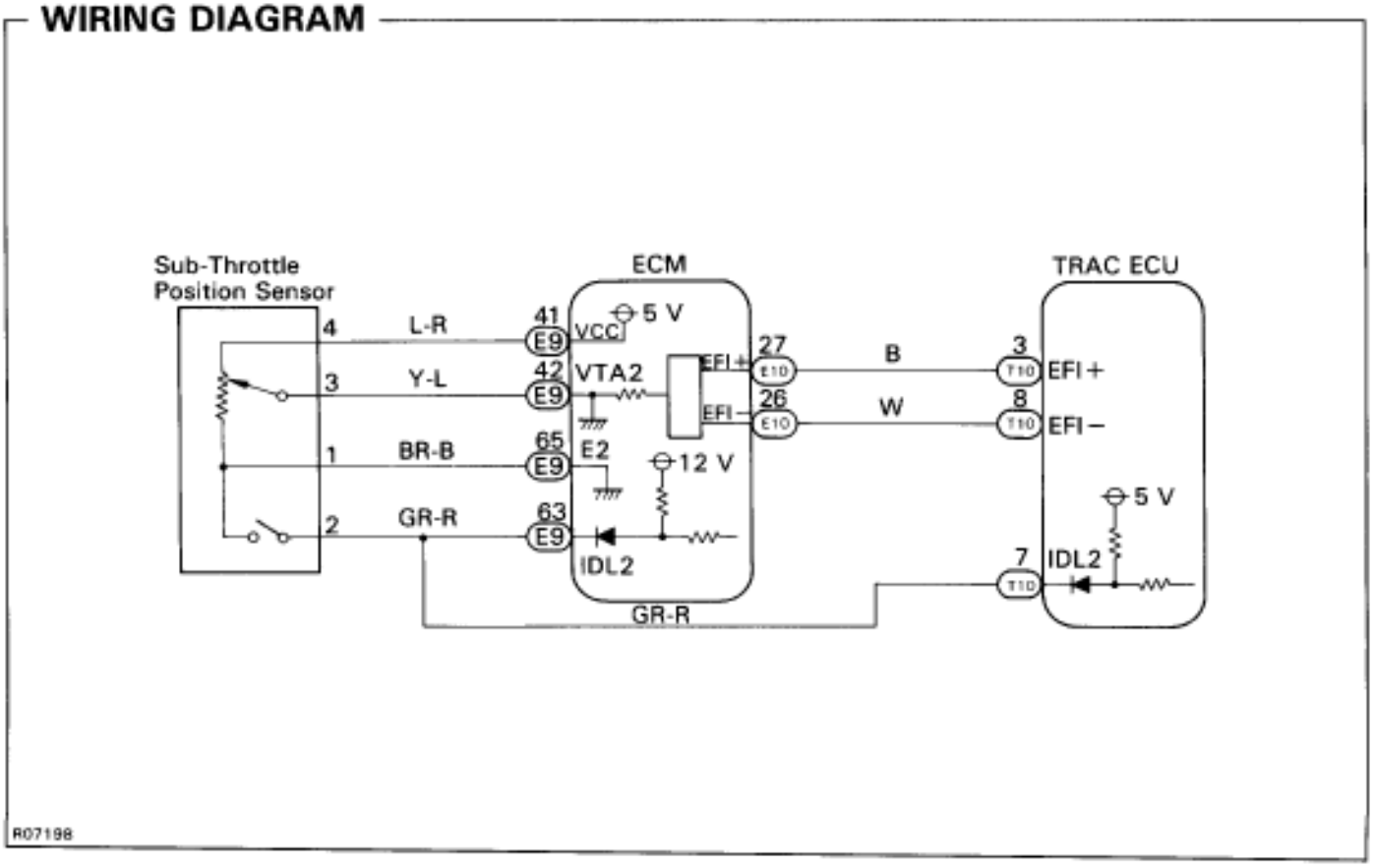

INSPECTION PROCEDURE

HINT: The sub–throttle position sensor signal is transmitted to the TRAC ECU from ECM, so if an error occurs at the engine side, the TRAC ECU also detects it.
If diagnostic trouble code No. 47 is being output for the engine, troubleshoot the engine first.

1 **Is diagnostic trouble code output for the engine?**

Do diagnostic trouble code check on page **EG–491**.

NO

YES → **Repair circuit indicated by the code output.**

2 **Check voltage between terminal IDL2 of TRAC ECU and body ground.**

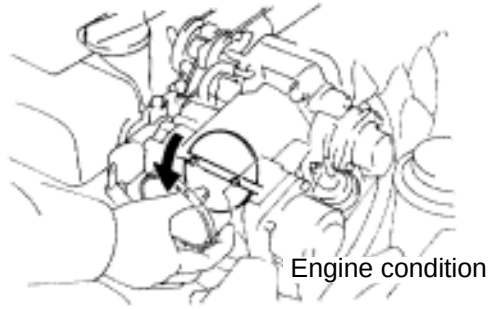

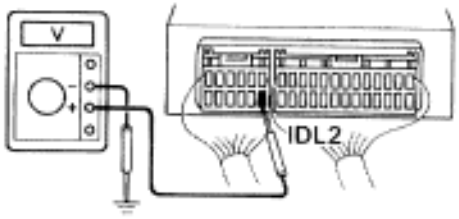

R06986
BE6653
R06993

P
1. Remove TRAC ECU with connectors still connected.
2. Remove intake air duct.
3. Disconnect step motor connector.
4. Turn ignition switch ON.

C Measure voltage between terminal IDL2 of TRAC ECU and body ground, when the sub–throttle valve is fully closed and fully open.

OK

Sub–throttle valve position	Voltage
Fully closed	Below 1.0 V
Fully open	10 – 14 V

NG

OK → Go to step 6.

3 Check for open and short in harness and connector between terminal IDL2 of TRAC ECU and main throttle position sensor with TRAC ECU, ECM and main throttle position sensor connectors disconnected (See page IN–30).

OK

NG → Repair or replace harness or connector.

4 Check for short in harness between terminal IDL2 of TRAC ECU and body ground with only main throttle position sensor connector connected (See page IN–30).

OK

NG → Check and replace main throttle position sensor.

5 Check for short in harness between terminal IDL2 of TRAC ECU and body ground with only ECM connector connected (See page IN–30).

OK

NG → Check and replace ECM.

Check and replace TRAC ECU.

6 Check voltage of terminal VTA2 of ECM (See page EG–554).

NG

OK → Check and replace ECM.

7 Check for open and short in harness and connector between terminal VTA2 of ECM and main throttle position sensor (See page IN–30).

OK

NG → Repair or replace harness or connector.

8 Check main throttle position sensor (See page EG–555).

OK

NG → Adjust or replace main throttle position sensor See page EG–294).

Check and replace ECM.

DTC 51 Engine Malfunction Detection Circuit

CIRCUIT DESCRIPTION

If trouble in the engine control system causes the malfunction indicator light to light up, this information is transmitted from the ECM to the TRAC ECU. The TRAC ECU may prohibit TRAC control as a result.

DTC No.	Diagnostic Trouble Code Detecting Condition	Trouble area
51	Conditions (1) and (2) continue for more than 1 sec.: (1) Engine speed: 500 rpm or more (2) Malfunction information is input from the ECM.	Engine control system

INSPECTION PROCEDURE

1 **Check the diagnostic trouble code for the engine (See page EG–491).**

Malfunction indicator light remains ON. — **Output NG code** → **Repair engine control system according to the code output.**

Check for short in all the harness and ECU connected to malfunction indicator light.

DTC 53 ECM Communication Circuit Malfunction

CIRCUIT DESCRIPTION

This circuit is used to send TRAC control information from the TRAC ECU to the ECM (TRC+, TRC–), and engine control information from the ECM to the TRAC ECU (EFI+, EFI–).

DTC No.	Diagnostic Trouble Code Detecting Condition	Trouble area
53	Either of the following (1) or (2) continues for 5 sec.: (1) A signal is received from the ECM indicating trouble in the TRC+ or TRC– circuit. (2) No EFI ± data is received from the ECM when the engine speed is 500 RPM or more, or the vehicle speed is 60 km/h (37 mph) or more.	Open or short in TRC+ or TRC– circuit Open or short in EFI+ or EFI– circuit ECM TRAC ECU

WIRING DIAGRAM

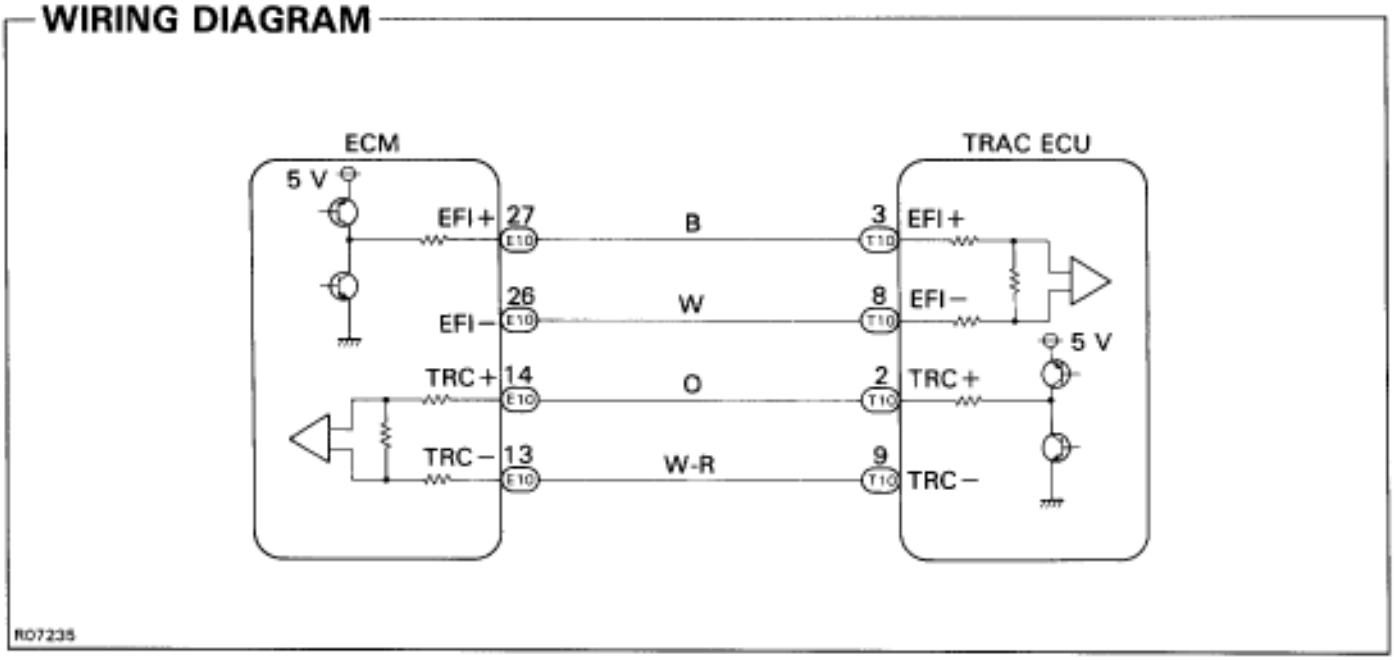

INSPECTION PROCEDURE

HINT: When the TRAC indicator light is ON, there is a problem in the EFI ± circuit, and when the TRAC indictor light is OFF, there is a problem in the TRC ± circuit.

1 **Check for open and short n harness and connector between terminals EFI+, EFI–, TRAC+ and TRC– of ECU and ECM (See page IN–30).**

NG → **Repair or replace harness or connector.**

OK →

Check and replace ECM or TRAC ECU.

DTC 61 ABS & TRAC ECU Communication Circuit Malfunction

CIRCUIT DESCRIPTION

DTC No.	Diagnostic Trouble Code Detecting Condition	Trouble area
61	Malfunction in ABS & TRAC ECU communication circuit.	Open or short in ABSO, BRC, BRP circuit ABS & TRAC ECU TRAC ECU

WIRING DIAGRAM

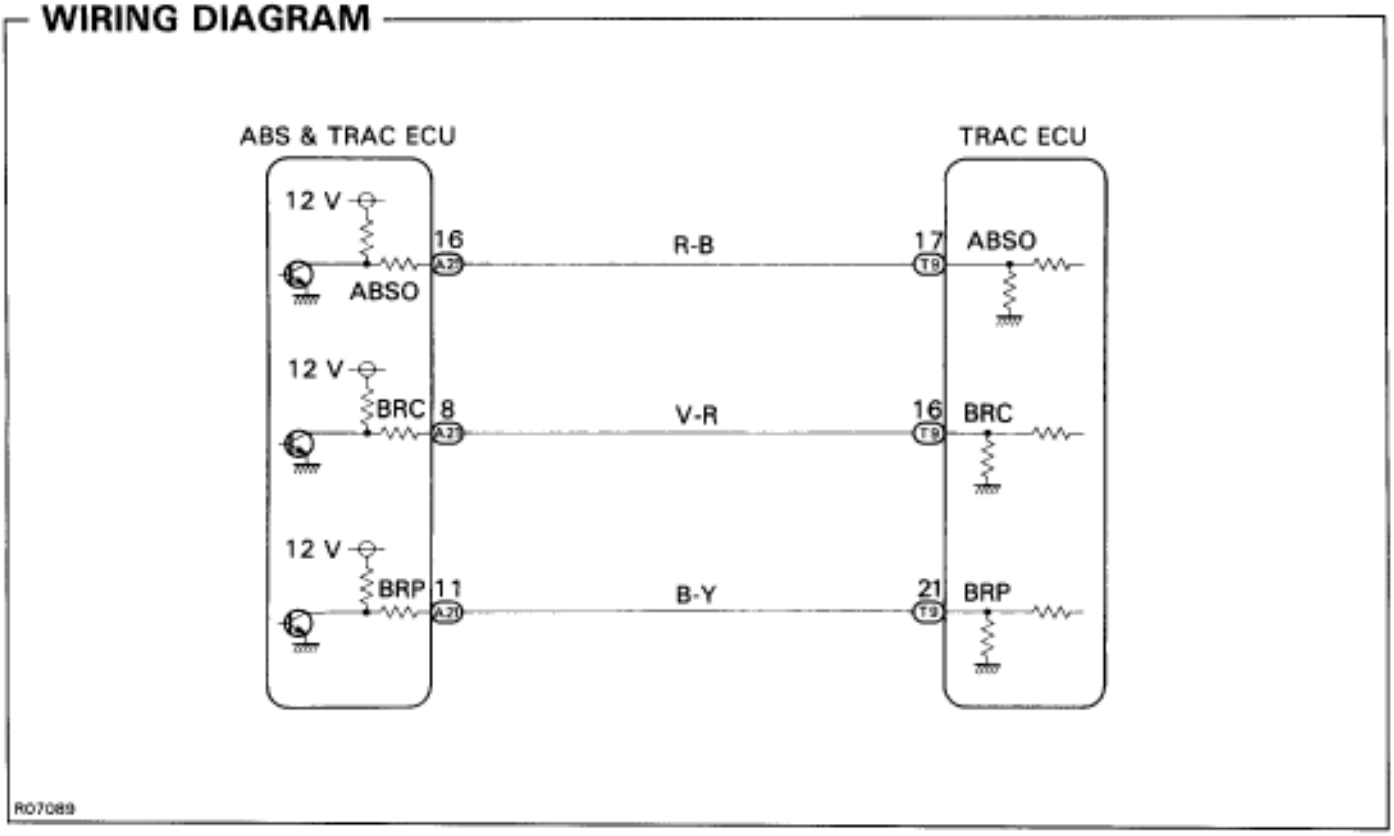

INSPECTION PROCEDURE

1 **Check for open and short n harness and connector between terminals EFI+, EFI–, TRAC+ and TRC– of ECU and ECM (See page IN–30).**

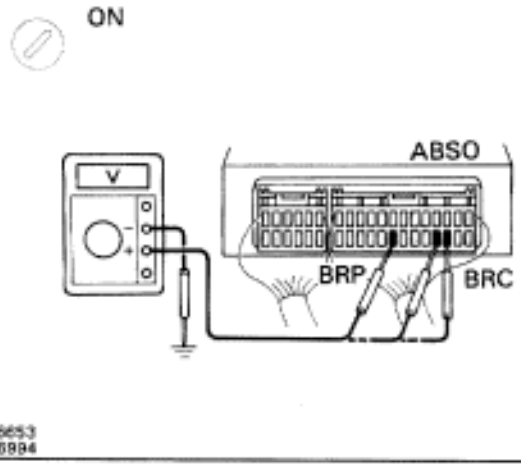

P Remove TRAC ECU with connectors still connected.

C Measure voltage between terminals ABSO, BRC, BRP of TRAC ECU and body ground when ignition switch is turned ON.

OK **Voltage:**
ABSO, BRC: 6 — 14 V
BRP: About 7 V (Pulse)
(Reference)

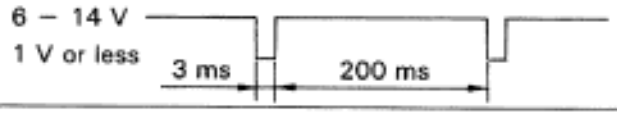

NG → OK: **Check and replace TRAC ECU.**

2 **Check voltage between terminals ABSO, BRC, BRP of TRAC ECU and body ground with TRAC ECU connector disconnected.**

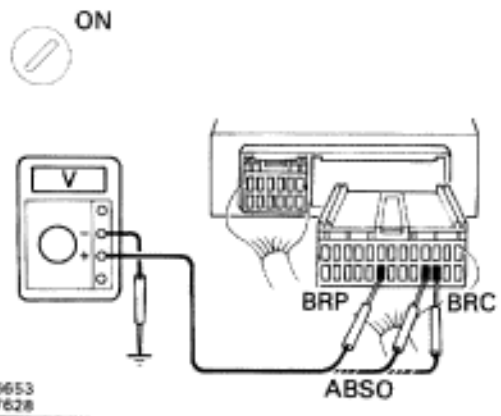

P Disconnect TRAC ECU connector.

C Measure voltage between terminals ABSO, BRC, BRP of TRAC ECU and body ground when ignition switch is turned ON.

OK **Voltage: See step 1.**

NG → OK: **Check and replace TRAC ECU.**

3 **Check for open and short in harness and connector between ABS & TRAC ECU and TRAC ECU (See page IN–30).**

NG → **Repair or replace harness or connector.**

OK → **Check and replace ABS & TRAC ECU.**

TRAC OFF Indicator TRAC Cut Switch Circuit

CIRCUIT DESCRIPTION

This is the TRAC control main switch. When the TRAC cut switch is pushed on, TRAC control goes off and the TRAC OFF indicator lights up. This indicator is also used for warnings when the trouble occurs.

WIRING DIAGRAM

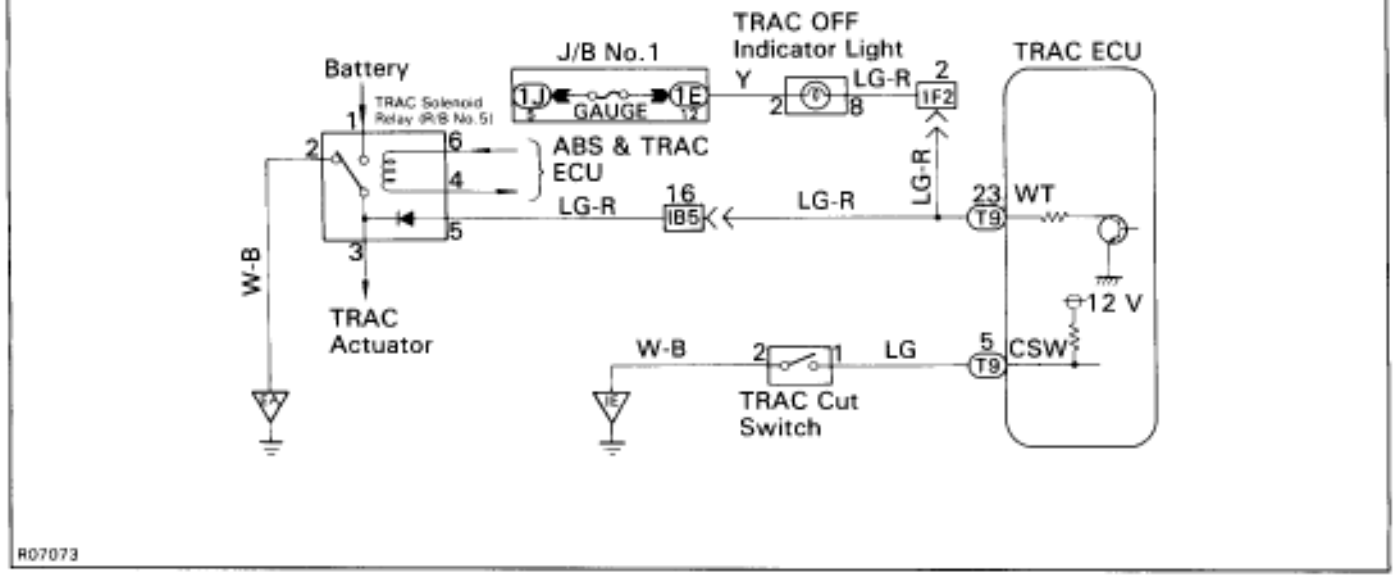

INSPECTION PROCEDURE

1 **Is diagnostic trouble code output?**

Do diagnostic trouble code check on page BR 126.

NO

YES → **Repair circuit indicated by the code output.**

2 **Check TRAC cut switch.**

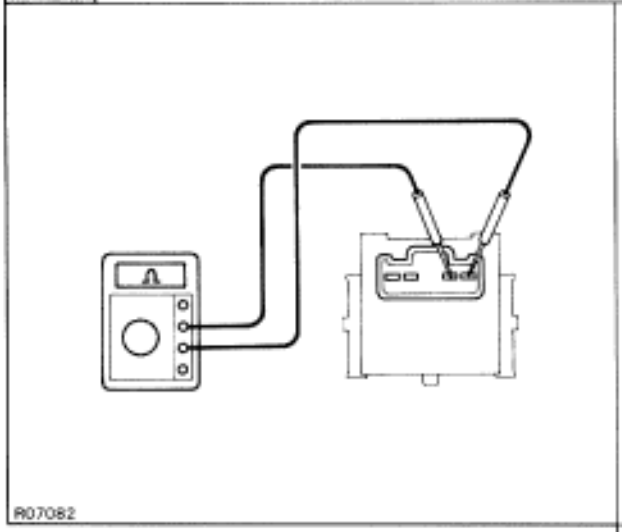

P
1. Remove TRAC cut switch.
2. Disconnect TRAC cut switch connector.

C
Measure resistance between terminals 1 and 2 of TRAC cut switch when TRAC cut switch is on and off.

OK

TRAC car switch	Resistance
Pushed in	Continuity
Released	1 M or higher

OK

NG → **Replace TRAC cut switch.**

3 **Check for open and short in harness and connector between terminal CSW of TRAC ECU and TRAC cut switch and body ground (See page IN–30).**

OK

NG → **Repair or replace harness or connector.**

4 **Check TRAC OFF indicator light.**

See Combination Meter Troubleshooting on page BR–43.

OK

NG → **Repair or replace combination meter.**

5 Check TRAC solenoid relay.

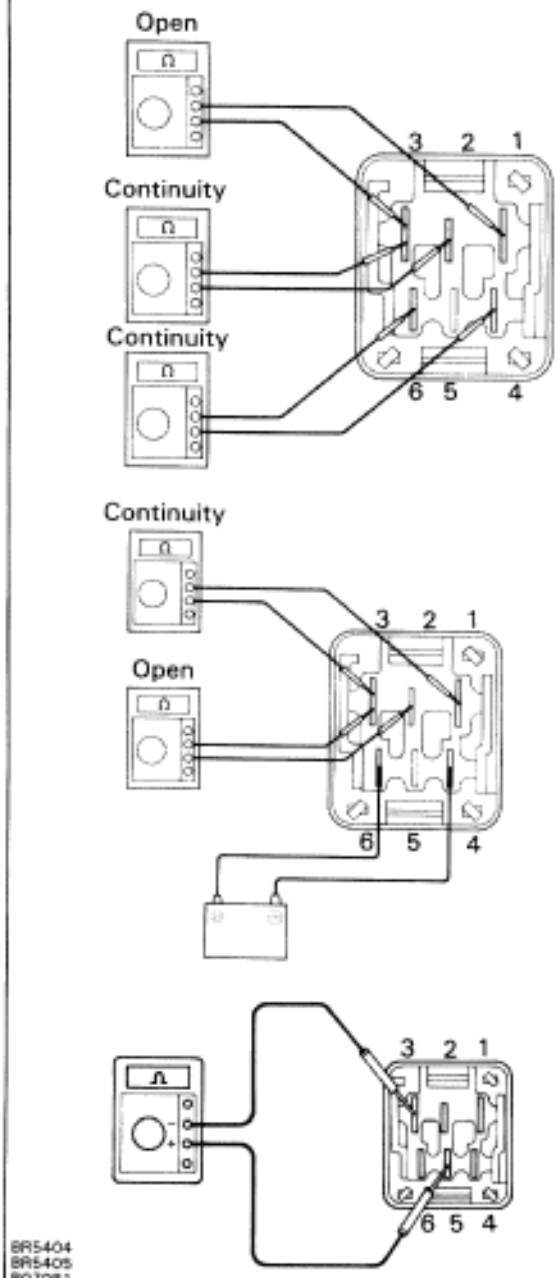

P Remove solenoid relay from R/B No.5.

C Check continuity between each terminal of TRAC solenoid relay shown below.

OK

Terminals 4 and 6	Continuity (Reference value 80)
Terminals 2 and 3	Continuity
Terminals 1 and 3	Open

C
1. Apply battery positive voltage between terminals 4 and 6.
2. Check continuity between each terminal of TRAC solenoid relay shown below.

OK

Terminals 2 and 3	Open
Terminals 1 and 3	Continuity

C Connect the ⊕ test lead to terminal 5 and the ⊖ lead to terminal 3. Check continuity between the terminals.

OK **Continuity**
If there is no continuity, connect the ⊖ test lead to terminal 5 and the ⊕ lead to terminal 3. Recheck continuity between terminals.

OK

NG **Replace TRAC solenoid relay.**

6 Check for open and short in harness and connector between terminal WT of TRAC ECU and battery or TRAC solenoid relay (See page IN–30).

OK

NG **Repair or replace harness or connector.**

Check and replace TRAC ECU.

TRAC Indicator Light Circuit

CIRCUIT DESCRIPTION

The TRAC indicator blinks during TRAC operation.
This indicator is also used for warnings when the trouble occurs and for displaying diagnostic trouble codes.

WIRING DIAGRAM

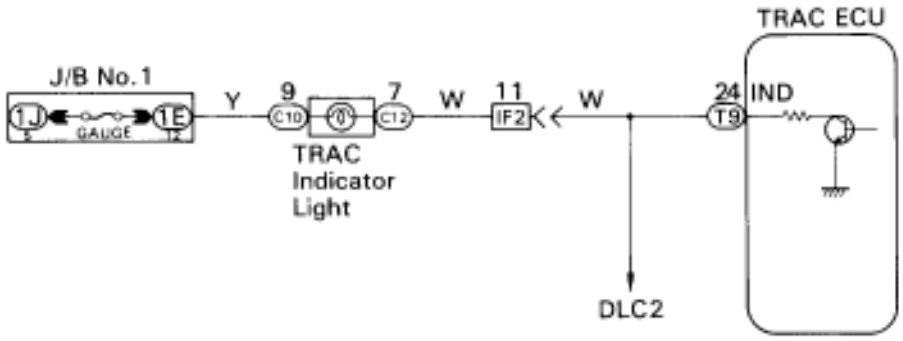

INSPECTION PROCEDURES

Troubleshoot in accordance with flow chart instructions for each trouble symptom.

TRAC Indicator light does not light up

Go to Combination Meter Troubleshooting on page **BE–43**.

TRAC Indicator light remains ON

1 **Check diagnostic trouble code (See page BR–126).**

- **Indicator light remains ON** → Output NG Code → **Repair circuit indicated by the code output.**

2 **Check for short in harness and connector between TRAC ECU and TRAC indicator light (See page IN–30).**

- **OK** → **Check and replace TRAC ECU.**
- **NG** → **Repair or replace harness or connector.**

Tc Terminal Circuit

CIRCUIT DESCRIPTION

By connecting terminals Tc and E1 of DLC1 or DLC2, the ECU displays the diagnostic trouble code by blinking the TRAC indicator light.

WIRING DIAGRAM

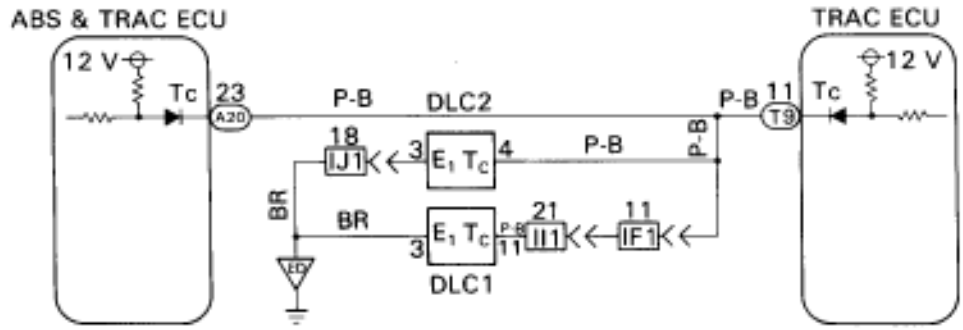

R07069

INSPECTION PROCEDURE

1 **Check voltage between terminals Tc and E1 of DLC2 or DLC1.**

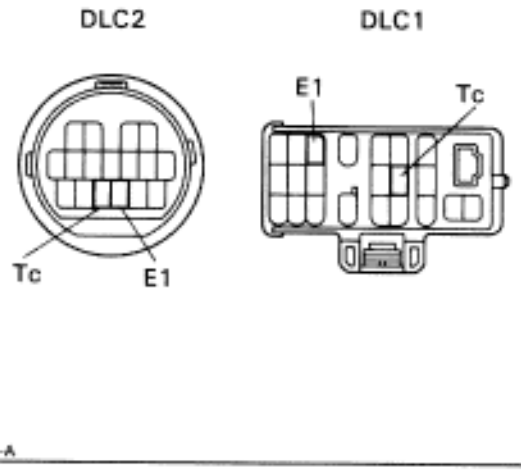

P Turn ignition switch ON

C Measure voltage between terminals Tc and E1 of DLC2 or DLC1.

OK **Voltage: 10 — 14 V**

NG

OK → **Proceed to next circuit inspection shown on problem symptoms chart (See page BR–133).**

2 **Check for open and short in harness and connector of symptoms connected to Tc terminal (See page IN–30).**

OK

NG → **Repair or replace harness or connector.**

Check and replace TRAC ECU.

Check for Fluid Leakage

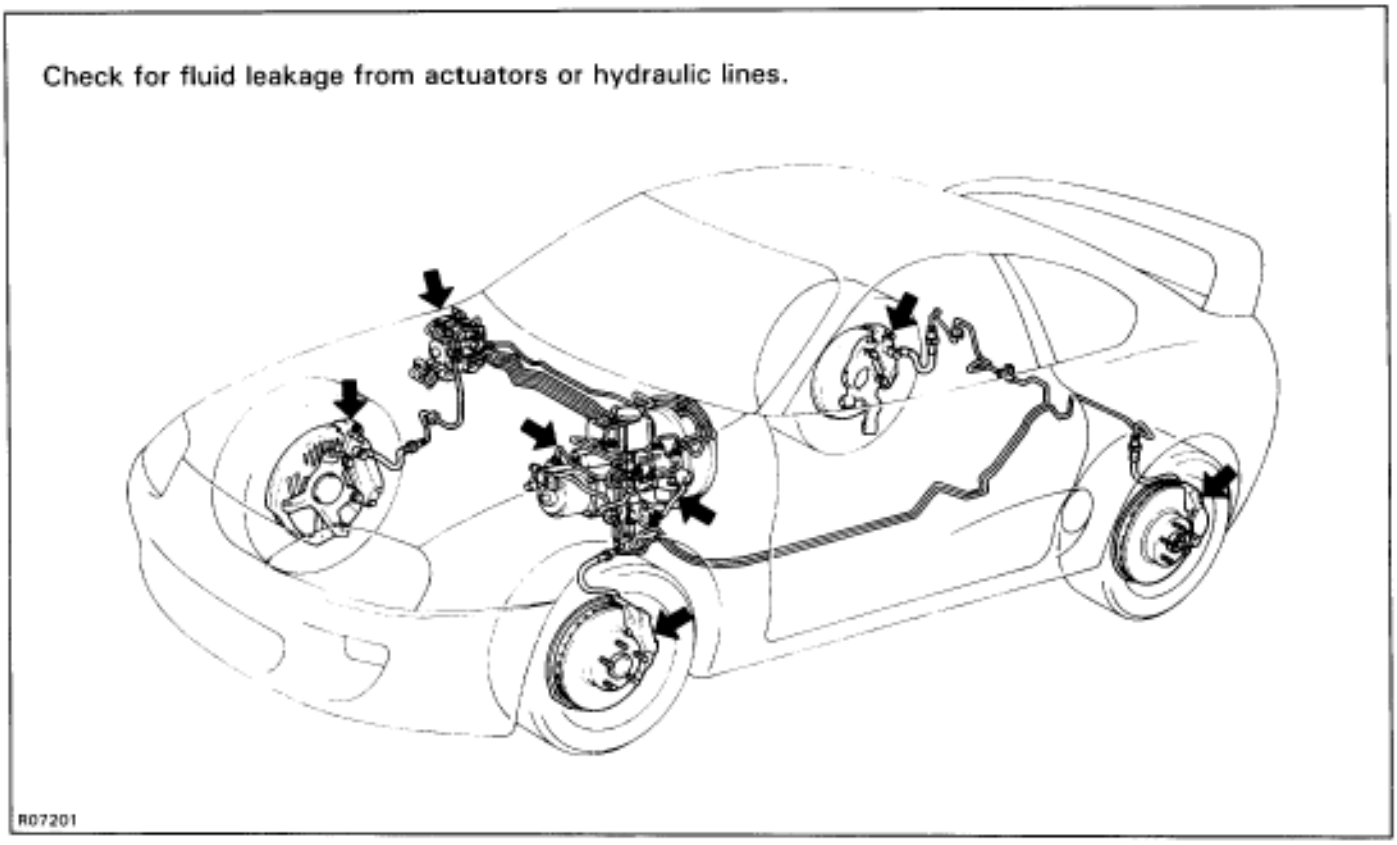

SERVICE SPECIFICATIONS

SERVICE DATA

Brake pedal height from asphalt sheet		154.2–164.2 mm (6.07–6.46 in.)
Brake pedal freeplay		1–6 mm (0.04–0.24 in.)
Brake pedal reserve distance at 490 N (50 kgf, 110.2 lbf) 2JZ–GTE 2JZ–GE		 More than 70 mm (2.76 in.) More than 72 mm (2.83 in.)
Brake booster push rod to piston clearance w/SST)		0 mm (0 in.)
Front brake pad thickness (2JZ–GTE)	STD	12.0 mm (0.472 in.)
Front brake pad thickness (2JZ–GTE)	Minimum	1.0 mm (0.039 in.)
Front brake pad thickness (2JZ–GE)	STD	11.0 mm (0.433 in.)
Front brake pad thickness (2JZ–GE)	Minimum	1.0 mm (0.039 in.)
Front brake disc thickness (2JZ–GTE)	STD	30.0 mm (1.181 in.)
Front brake disc thickness (2JZ–GTE)	Minimum	28.0 mm (1.102 in.)
Front brake disc thickness (2JZ–GE)	STD	32.0 mm (1.260 in.)
Front brake disc thickness (2JZ–GE)	Minimum	30.0 mm (1.181 in.)
Front brake disc runout	Maximum	0.05 mm (0.0020 in.)
Rear brake disc pad thickness (2JZ–GTE)	Maximum	11.0 mm (0.433 in.)
Rear brake disc pad thickness (2JZ–GTE)	Minimum	1.0 mm (0.039 in.)
Rear brake disc pad thickness (2JZ–GE)	STD	10.0 mm (0.394 in.)
Rear brake disc pad thickness (2JZ–GE)	Minimum	1.0 mm (0.039 in.)
Rear brake disc thickness	STD	16.0 mm (0.630 in.)
Rear brake disc thickness	Minimum	15.0 mm (0.591 in.)
Rear brake disc runout	Maximum	0.05 mm (0.0020 in.)
Rear brake disc inside diameter	STD	190 mm (7.48 in.)
Rear brake disc inside diameter	Maximum	191 mm (7.52 in.)
Parking brake lining thickness	STD	2.5 mm (0.098 in.)
Parking brake lining thickness	Minimum	1.0 mm (0.039 in.)
Parking brake lever travel at 196 N (20 kgf, 44.1 lbf)		5–8 clicks
Parking brake clearance between rear shoe and lever		Less than 0.35 mm (0.012 in.)
Parking brake adjusting shim thickness for rear disc brake		0.3 mm (0.012 in.) 0.6 mm (0.024 in.) 0.8 mm (0.031 in.) 2JZ–GTE only 0.9 mm (0.035 in.) 2JZ–GE only

TORQUE SPECIFICATIONS

Part tightened		N·m	Kgf·cm	ft·lbf
Master cylinder X Piston stopper bolts		10	100	7
Master cylinder X Reservoir		1.7	17.5	15.2 in.·lbf
Master cylinder X Brake booster		13	130	9
Brake line union nut	M10	15	155	11
Brake line union nut	M12	20	200	15
Brake booster clevis lock nut		25	260	19
Brake booster X Pedal bracket		13	130	9
Bleeder plug		11	110	8
Front disc brake caliper X Steering knuckle	2JZ–GTE	118	1,200	87
Front disc brake torque plate X Steering knuckle	2JZ–GE	118	1,200	87
Front disc brake caliper installation bolt	2JZ–GE	34	350	25
Front disc brake caliper X Flexible hose union bolt		30	310	22
Rear disc brake caliper X Axle carrier	2JZ–GTE	104	1,065	77
Rear disc brake torque plate X Axle carrier	2JZ–GE	104	1,065	77
Rear disc brake caliper installation bolt	2JZ–GE	34	350	25
Rear disc brake caliper X Flexible hose union bolt		30	310	22
ABS actuator X Actuator bracket		5.4	55	48 in.·lbf
ABS actuator X 2–way		8.8	90	78 in.·lbf
ABS actuator bracket X Body		19	195	14
Cruise control actuator X Body		19	195	14
Cruise control actuator X ABS actuator X Body		19	195	14
Front speed sensor installation bolt		7.8	80	69 in.·lbf
Rear speed sensor installation bolt		7.8	80	69 in.·lbf
TRAC actuator bracket X TRAC pump bracket or body		13	130	9
TRAC pump bracket X Body		19	195	14
TRAC pump bracket X Damper		7.8	80	69 in.·lbf
TRAC pump bracket X TRAC pump bracket No.2		7.8	80	69 in.·lbf
TRAC pump X TRAC pump bracket No.2		7.8	80	69 in.·lbf
TRAC pump or damper X Union bolt		46	465	34

CHARGING SYSTEM

1. **Check that the battery cables are connected to the correct terminals.**
2. **Disconnect the battery cables when the battery is given a quick charge.**
3. **Do not do these tests with a high voltage insulation resistance tester.**
4. **Never disconnect the battery while the engine is running.**

PREPARATION

SST (SPECIAL SERVICE TOOLS)

	09285–76010	Injection Pump Camshaft Bearing Cone Replacer	Rotor rear bearing cover
	09608–20012	Front Hub & Drive Pinion Bearing Tool Set	
	(09608–00030)	Replacer	Rotor front bearing
	09820–00021	Alternator Rear Bearing Puller	
	09820–00030	Alternator Rear Bearing Replacer	Rotor rear bearing
	09820–63010	Alternator Pulley Set Nut Wrench Set	
	09950–40010	Puller B Set	Rectifier end frame

RECOMMENDED TOOLS

	09082–00050	TOYOTA Electrical Tester Set ◆	
	09200–00010	Engine Adjust Kit ◆	

EQUIPMENT

Battery specific gravity gauge	Except maintenance–free battery
Torque wrench	
Vernier calipers	Rotor (Slip ring)

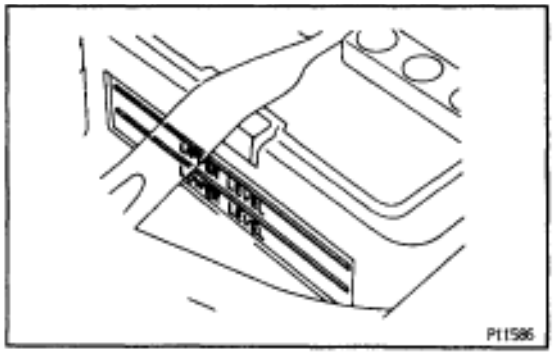

ON–VEHICLE INSPECTION

1. CHECK BATTERY ELECTROYTE LEVEL AND VOLTAGE

(a) Check the electrolyte quantity of each cell.

Maintenance–Free Battery:

If under the lower level, replace the battery (or add distilled water if possible.). Need to check the charging system.

Except Maintenance–Free Battery:

If under the lower level, add distilled water.

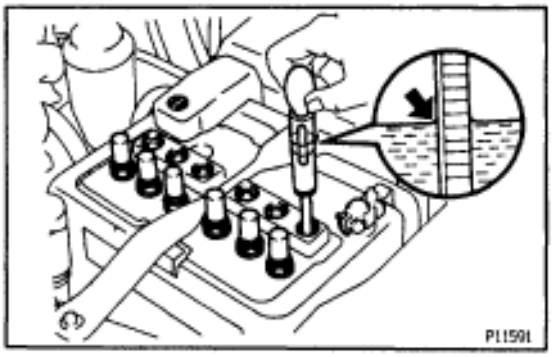

(b) Except Maintenance–Free Battery:

Check the specific gravity of each cell.

Standard specific gravity:

1.27–1.29 at 20°C (68°F)

If the specific gravity is less than specification, charge the battery.

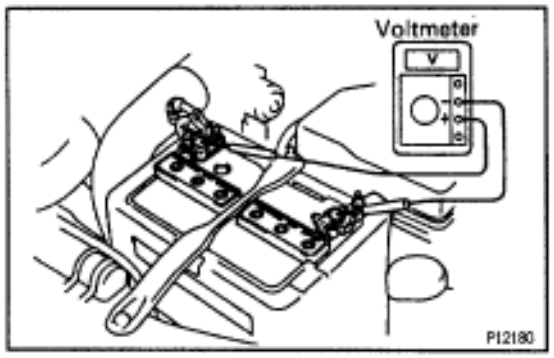

(c) Maintenance–Free Battery:

Measure the battery voltage between the negative (–) and positive (+) terminals of the battery.

Standard voltage:

12.7–12.9 V at 20°C (68°F)

HINT:

- Before measuring the voltage, turn the ignition switch OFF and turn off the electrical systems (headlight, blower motor, rear defogger etc.) for 60 seconds to remove the surface charge.
- If the vehicle has been running, wait 5 minutes or more after the vehicle stops before measuring the battery voltage.

If the voltage is less than specification, charge the battery.

HINT: Check the indicator as shown in the illustration.

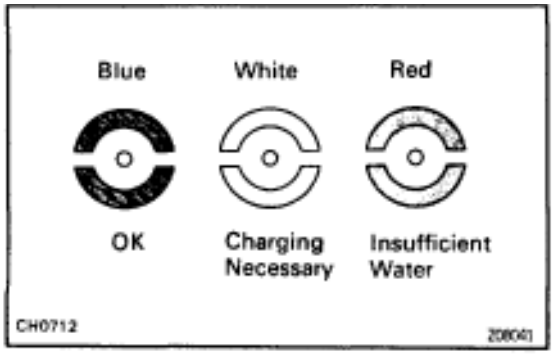

EQUIPMENT

Battery specific gravity gauge	Except maintenance–free battery
Torque wrench	
Vernier calipers	Rotor (Slip ring)

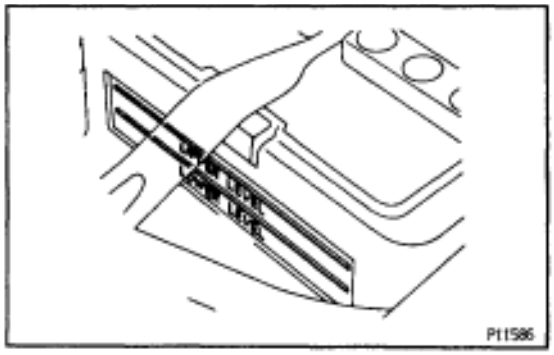

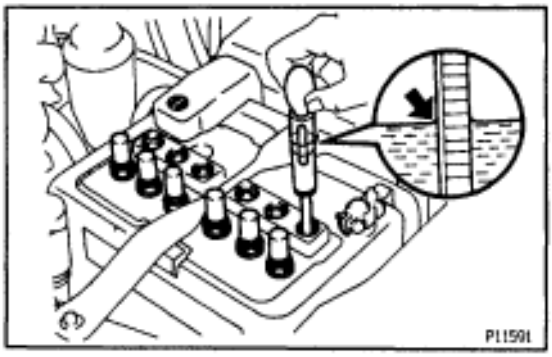

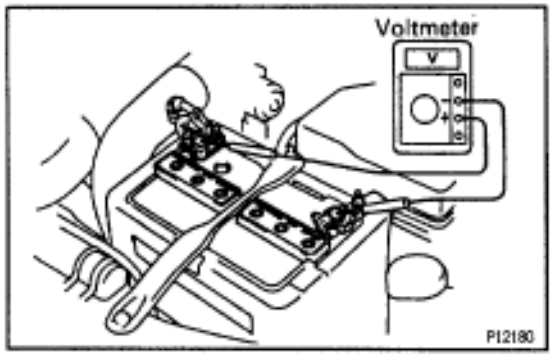

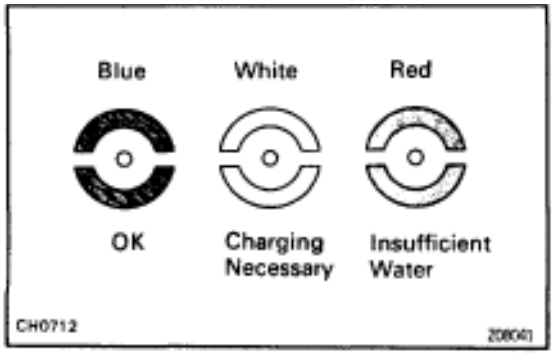

ON–VEHICLE INSPECTION

1. CHECK BATTERY ELECTROYTE LEVEL AND VOLTAGE

(a) Check the electrolyte quantity of each cell.

Maintenance–Free Battery:

If under the lower level, replace the battery (or add distilled water if possible.). Need to check the charging system.

Except Maintenance–Free Battery:

If under the lower level, add distilled water.

(b) Except Maintenance–Free Battery:

Check the specific gravity of each cell.

Standard specific gravity:

1.27–1.29 at 20°C (68°F)

If the specific gravity is less than specification, charge the battery.

(c) Maintenance–Free Battery:

Measure the battery voltage between the negative (–) and positive (+) terminals of the battery.

Standard voltage:

12.7–12.9 V at 20°C (68°F)

HINT:

- Before measuring the voltage, turn the ignition switch OFF and turn off the electrical systems (headlight, blower motor, rear defogger etc.) for 60 seconds to remove the surface charge.
- If the vehicle has been running, wait 5 minutes or more after the vehicle stops before measuring the battery voltage.

If the voltage is less than specification, charge the battery.

HINT: Check the indicator as shown in the illustration.

2. CHECK BATTERY TERMINALS AND FUSES

(a) Check that the battery terminals are not loose or corroded.
If the terminals are corroded, clean the terminals.

(b) Check the fuses for continuity.

H–fuse:

ALT 120A

M–fuse:

AM1 50A for USA

AM1 60A for CANADA

Fuse:

AM2 30A

ALT–S 7.5A

GAUGE 10A

IGN 7.5A

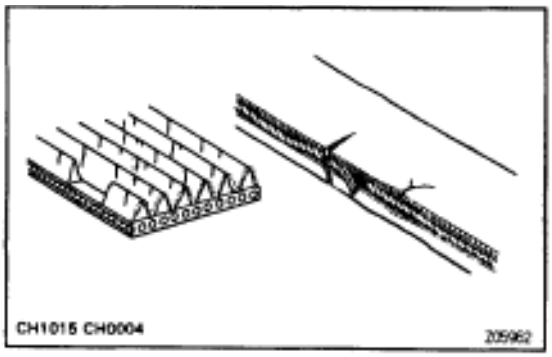

3. INSPECT DRIVE BELTHINT: A belt tensioner is used, so checking the belt tension is not necessary.

(a) Visually check the drive belt for excessive wear, frayed cords, etc.
If necessary, replace the drive belt.
HINT:

- Cracks on the rib side of a drive belt are considered acceptable. If the drive belt has chunks missing from the ribs, it should be replaced.
- The drive belt tension can be released by turning the belt tensioner clockwise.

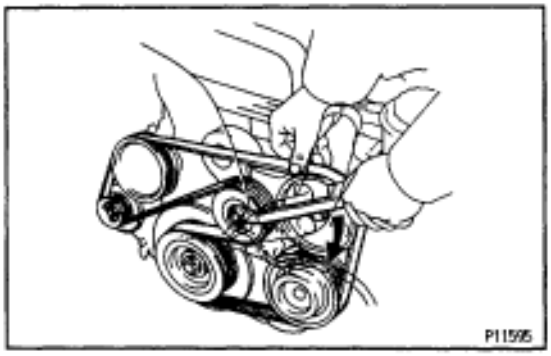

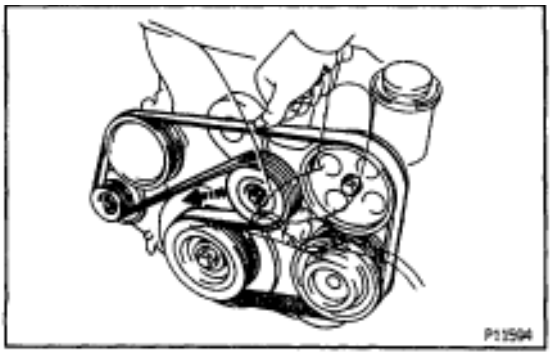

(b) Check the belt tensioner operation.

- Check that the belt tensioner moves downward when the drive belt is pressed down at the points indicated in the illustration with approx. 98 N (10 kgf. 22.0 lbf) of force.
- Check the alignment of the belt tensioner pulley to make sure the drive belt will not slip off the pulley.

If necessary, replace the belt tensioner.

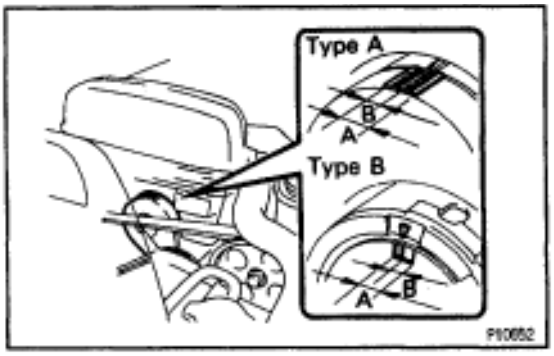

- Check that the arrow mark on the belt tensioner falls within area A of the scale.

If it is outside area A, replace the drive belt.

HINT:

- When a new belt is installed, it should lie within area B. If not, the drive belt is not correct.

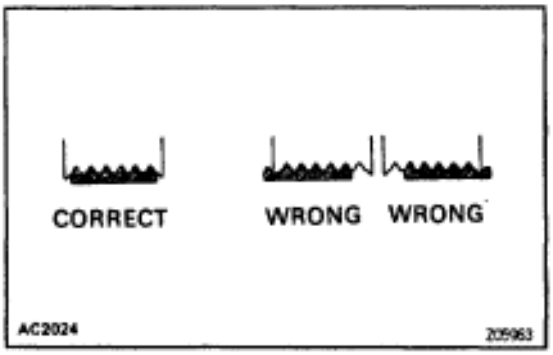

- After installing a drive belt, check that it fits properly in the ribbed grooves.
- Check by hand to confirm that the belt has not slipped out of the groove on the bottom of the pulley.

4. REMOVE ENGINE UNDER COVER

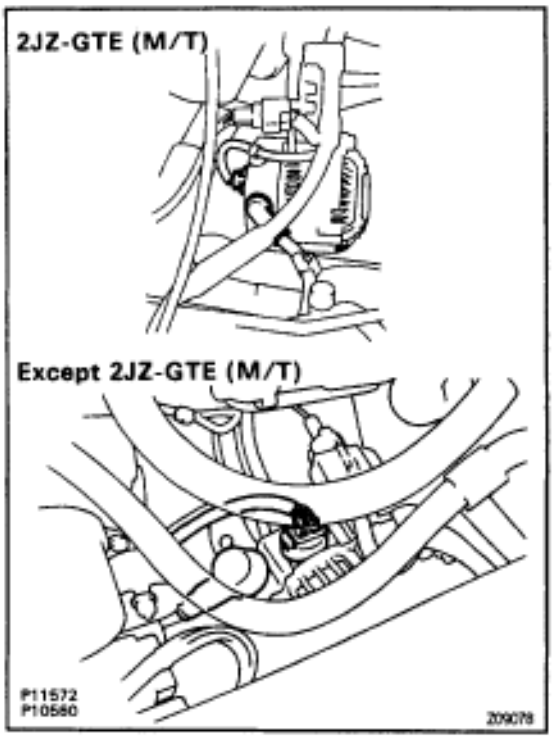

5. VISUALLY CHECK GENERATOR WIRING AND LISTEN FOR ABNORMAL NOISES

(a) Check that the wiring is in good condition.

(b) Check that there is no abnormal noise from the generator while the engine is running.

6. CHECK CHARGE WARNING LIGHT CIRCUIT

(a) Warm up the engine and then turn it off.

(b) Turn off all accessories.

(c) Turn the ignition switch ”ON”. Check that the charge warning light is lit.

(d) Start the engine. Check that the light goes off. If the light does not go off as specified, troubleshoot the charge light circuit.

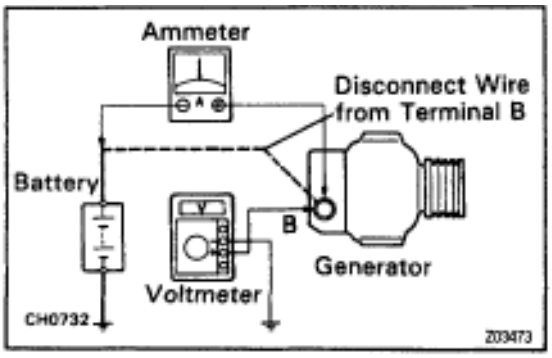

7. INSPECT CHARGING CIRCUIT WITHOUT LOAD

HINT: If a battery/generator tester is available, connect the tester to the charging circuit as per manufacturer’s instructions.

(a) If a tester is not available, connect a voltmeter and ammeter to the charging circuit as follows:

- Disconnect the wire from terminal B of the generator, and connect it to the negative (–) probe of the ammeter.

- Connect the positive (+) probe of the ammeter to terminal B of the generator.
- Connect the positive (+) probe of the voltmeter to terminal B of the generator.
- Ground the negative (–) probe of the voltmeter.

(b) Check the charging circuit as follows:

With the engine running from idling to 2,000 rpm, check the reading on the ammeter and voltmeter:

Standard amperage:

10 A or less

Standard voltage:

At 25˚C (77˚F)

13.6–14.8 V

At 115˚C (239˚F)

S13.2–14.0 V

If the voltmeter reading is more than standard voltage, replace the voltage regulator.

If the voltmeter reading is less than standard voltage, check the voltage regulator and generator as follows:

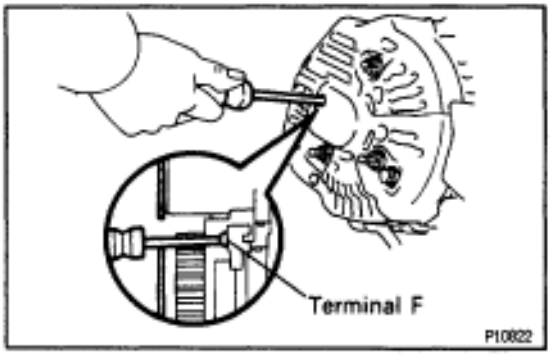

- With terminal F grounded, start the engine and check the voltmeter reading of terminal B.
- If the voltmeter reading is more than standard voltage, replace the voltage regulator.
- If the voltmeter reading is less than standard voltage, check the generator.

8. INSPECT CHARGING CIRCUIT WITH LOAD

(a) With the engine running at 2,000 rpm, turn on the high beam headlights and place the heater blower switch at ”HI”.

(b) Check the reading on the ammeter.

Standard amperage:

30 A or more

If the ammeter reading is less than the standard amperage, repair the generator.

HINT: If the battery is fully charged, the indication will sometimes be less than standard amperage.

9. REINSTALL ENGINE UNDER COVER

GENERATOR

COMPONENTS FOR REMOVAL AND INSTALLATION

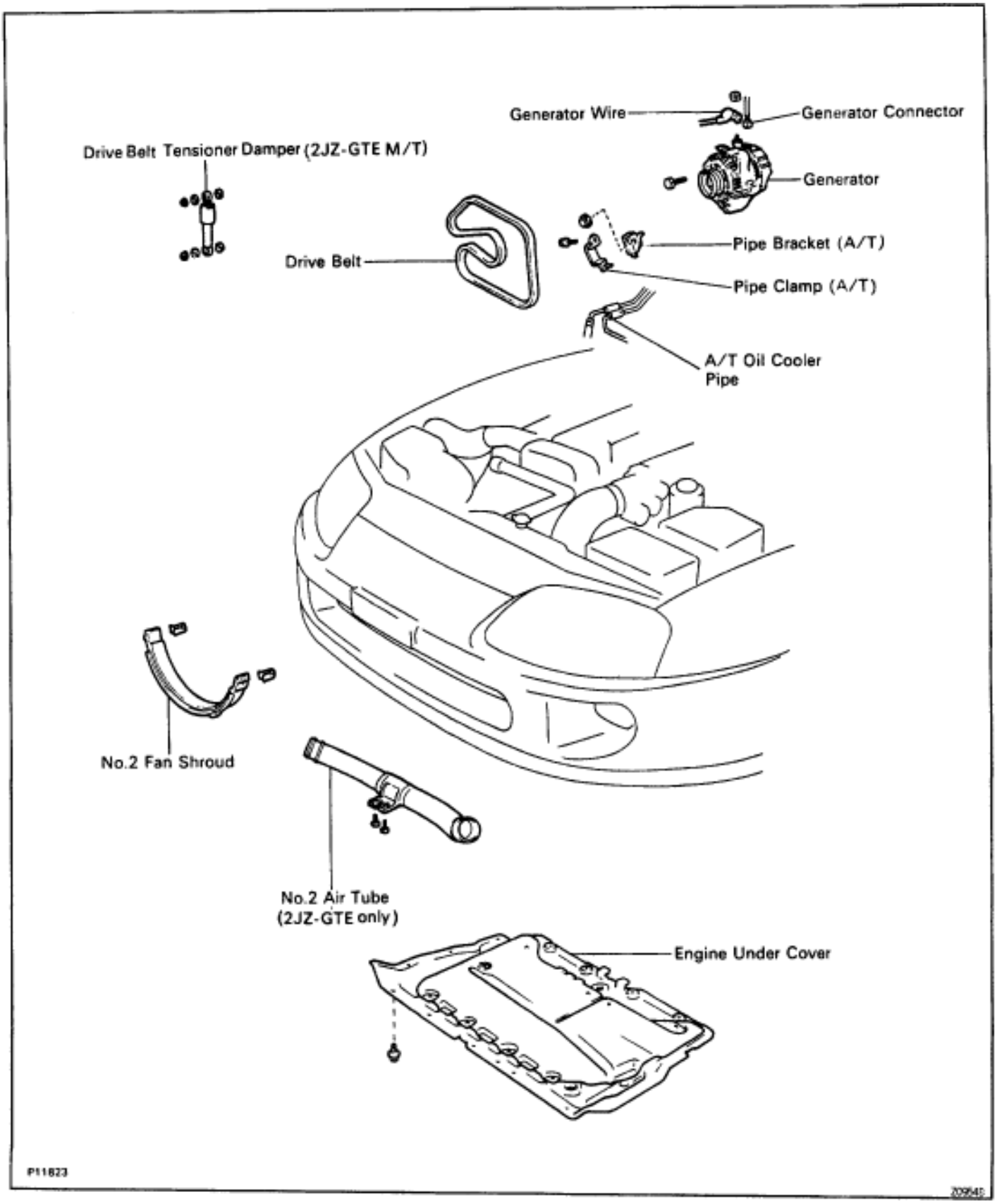

GENERATOR REMOVAL

Installation is in the reverse order of removal.

1. **REMOVE ENGINE UNDER COVER**
2. **2JZ–GTE:**
   REMOVE NO.2 AIR TUBE FOR CAC
3. **REMOVE NO.2 FAN SHROUD**

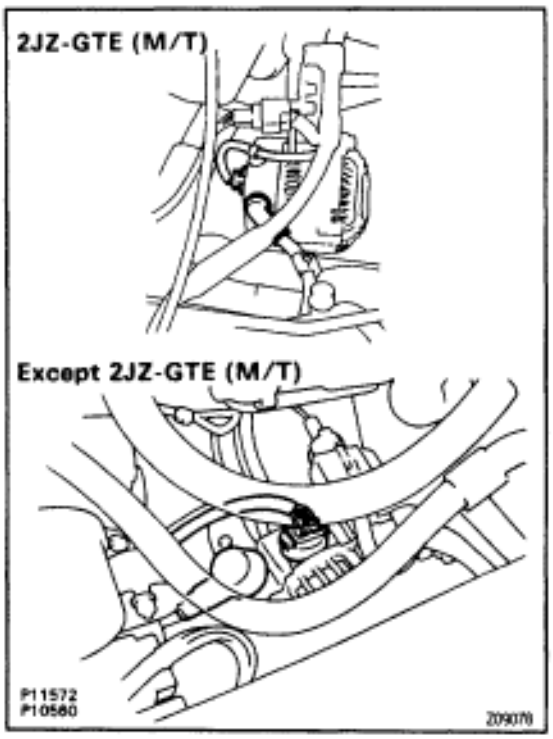

4. **2JZ–GTE M/T:**
   REMOVE DRIVE BELT TENSIONER DAMPER
   Torque: 20 N·m (200 kgf·cm, 14 ft·lbf)
5. **REMOVE DRIVE BELT**
6. **REMOVE GENERATOR**

(a) Disconnect the generator connector.

(b) Remove the rubber cap and nut, and disconnect the generator wire.

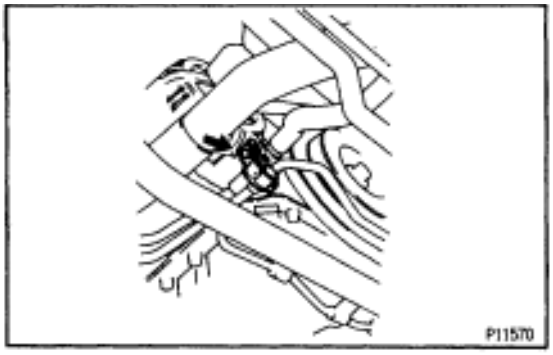

(c) Disconnect the generator wire clamp from the wire clip on the generator.

(d) A/T:
Remove the bolt and pipe clamp, and disconnect the 2 oil cooler pipes from the generator.

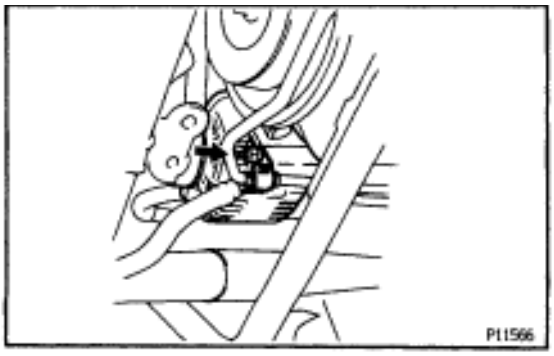

(e) Remove the bolt, nut, pipe bracket and generator.
Torque: 37 N·m (380 kgf·cm, 27 ft·lbf)

COMPONENTS FOR DISASSEMBLY AND ASSEMBLY

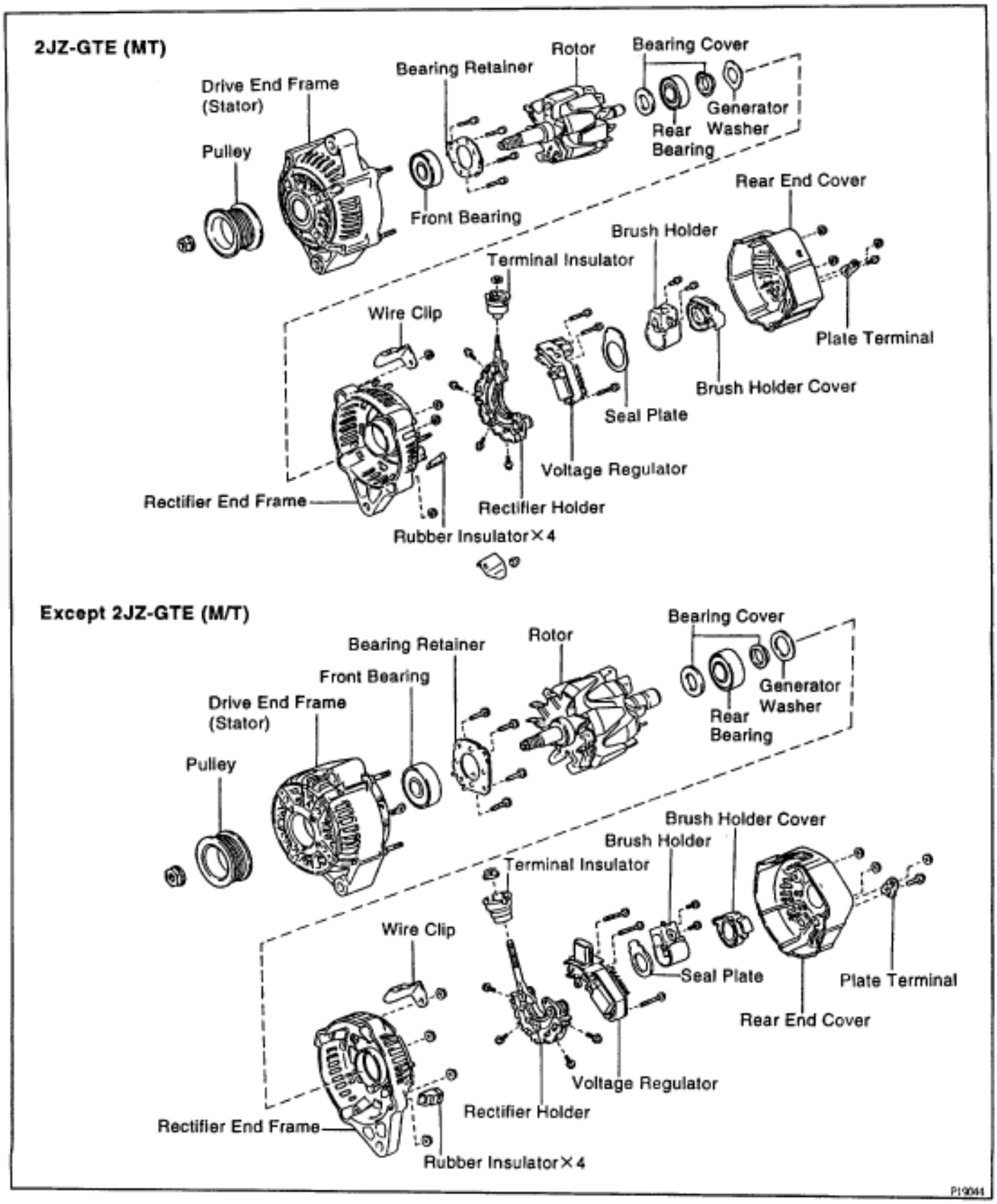

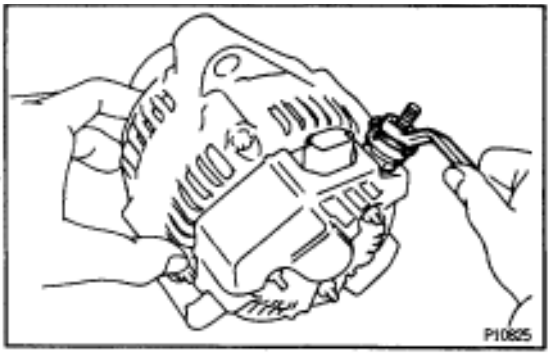

GENERATOR DISASSEMBLY

1. REMOVE REAR END COVER

(a) Remove the nut and terminal insulator.

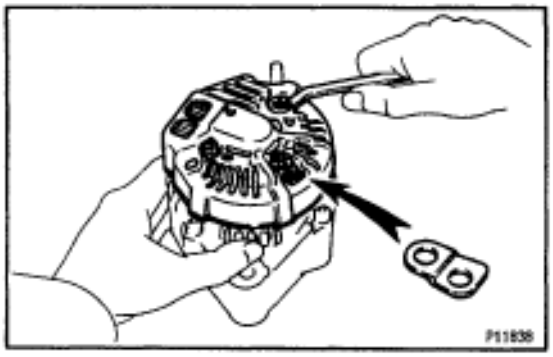

(b) Remove the bolt, 3 nuts, plate terminal and end cover.

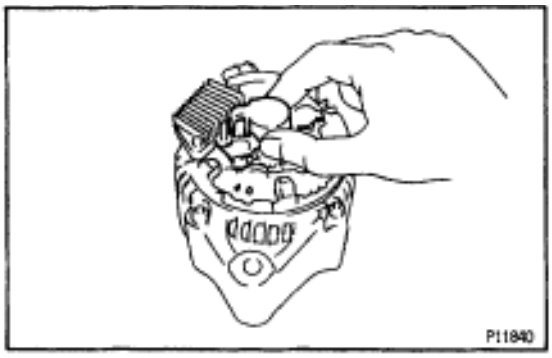

2. REMOVE BRUSH HOLDER AND VOLTAGE REGULATOR

(a) Remove the brush holder cover from the brush holder.

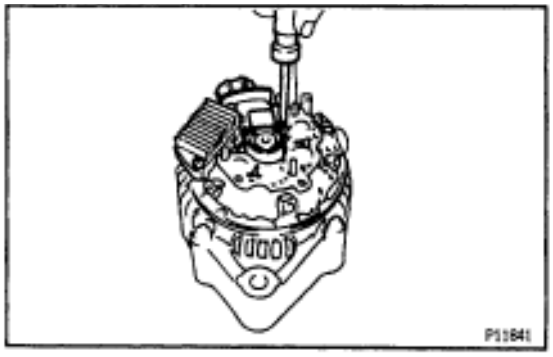

(b) Remove the 5 screws, brush holder and voltage regulator.

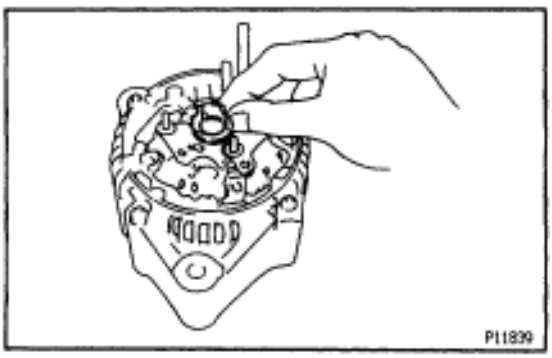

(c) Remove the seal plate from the rectifier end frame.

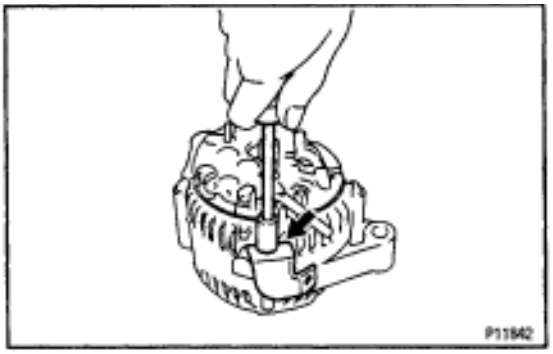

3. REMOVE WIRE CLIP

Remove the nut and wire clip.

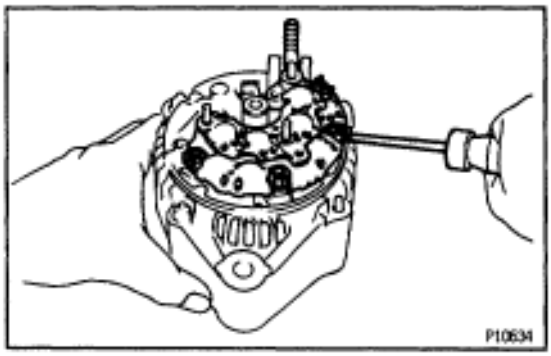

4. REMOVE RECTIFIER HOLDER

(a) Remove the 4 screws and rectifier holder.

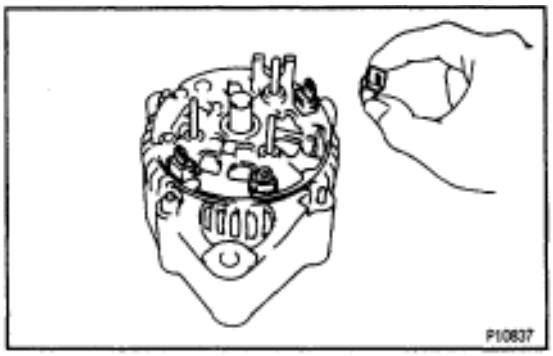

(b) Remove the 4 rubber insulators.

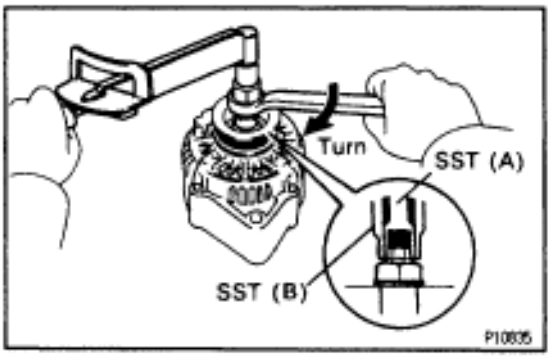

5. REMOVE PULLEY

(a) Hold SST (A) with a torque wrench, and tighten SST (B) clockwise to the specified torque.
SST 09820–63010
Torque: 39 N·m (400 kgf·cm, 29 ft·lbf)

(b) Check that SST (A) is secured to the rotor shaft.

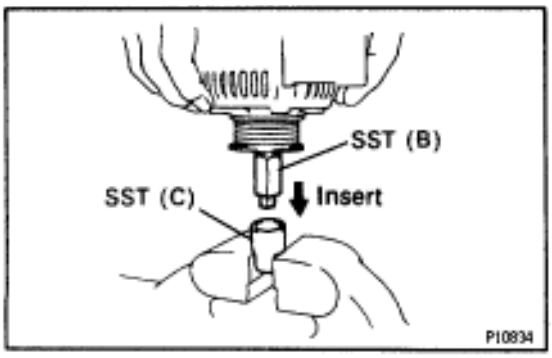

(c) Mount SST (C) in a vise.

(D) Insert SST (B) into SST (C), and attach the pulley nut to SST (C).

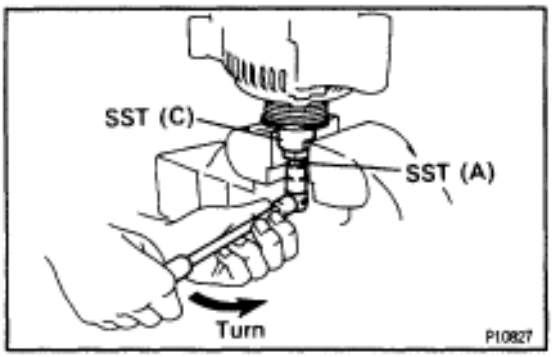

(e) To loosen the pulley nut, turn SST (A) in the direction shown in the illustration.
NOTICE: To prevent damage to the rotor shaft, do not loosen the pulley nut more than one–half of a turn.
(f) Remove the generator from SST (C).

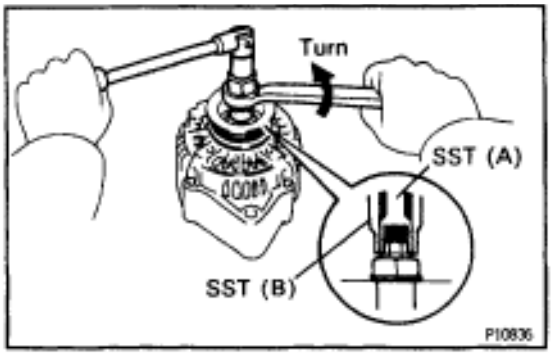

(g) Turn SST (B), and remove SST (A and B).
(h) Remove the pulley nut and pulley.

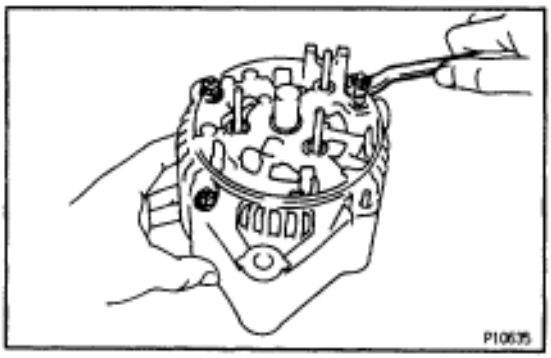

6. REMOVE RECTIFIER END FRAME
(a) Remove the 3 nuts.

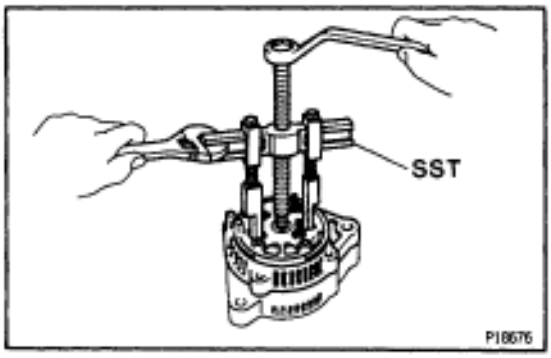

(b) Using SST, remove the rectifier end frame.
SST 09950–40010

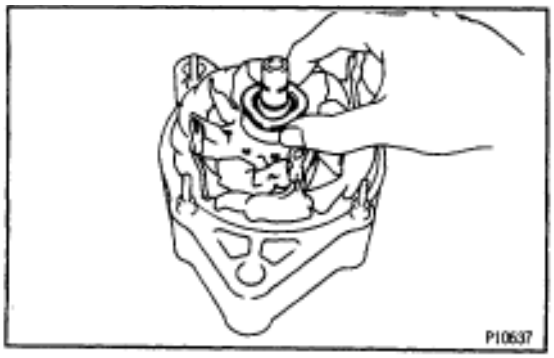

(c) Remove the generator washer.
7. REMOVE ROTOR FROM DRIVE END FRAME

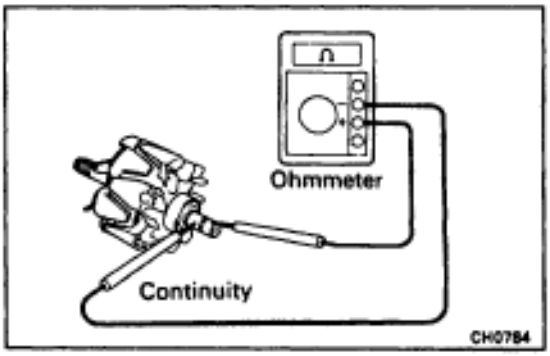

GENERATOR INSPECTION AND REPAIR

Rotor

1. INSPECT ROTOR FOR OPEN CIRCUIT

Using an ohmmeter, check that there is continuity between the slip rings.

Standard resistance:

2.8–3.0 Ω at 20˚C (68˚C)

If there is no continuity, replace the rotor

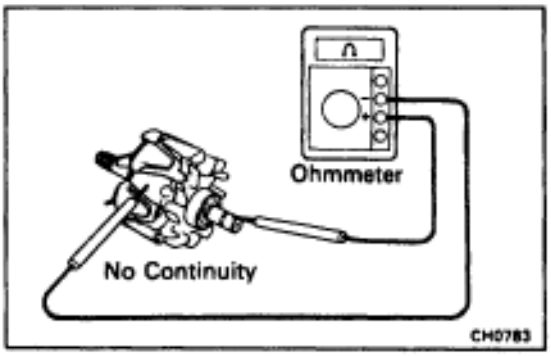

2. INSPECT ROTOR FOR GROUND

Using an ohmmeter, check that there is no continuity between the slip ring and rotor.If there is continuity, replace the rotor.

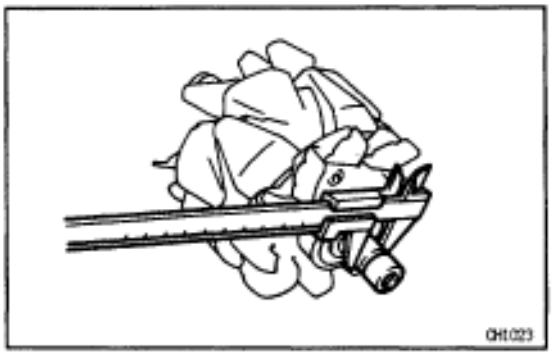

3. INSPECT SLIP RINGS

(a) Check that the slip rings are not rough or scored. If rough or scored, replace the rotor.

(b) Using a vernier caliper, measure the slip ring diameter.

Standard diameter:

14.2–14.4 mm (0.559–0.567 in.)

Minimum diameter:

12.8 mm (0.504 in.)

If the diameter is less than minimum, replace the rotor.

Stator (Drive End Frame)

1. INSPECT STATOR FOR OPEN CIRCUIT

Using an ohmmeter, check that there is continuity between the coil leads.If there is no continuity, replace the drive end frame assembly.

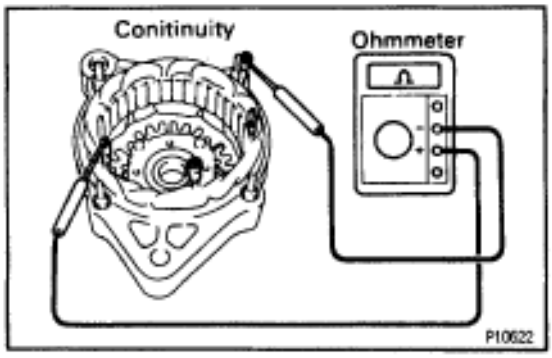

2. INSPECT STATOR FOR GROUND

Using an ohmmeter, check that there is no continuity between the coil lead and drive end frame.If there is continuity, replace the drive end frame assembly.

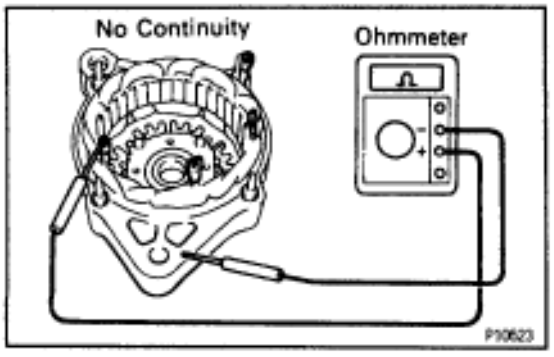

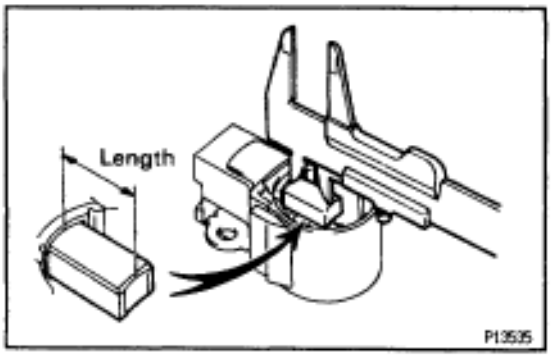

Brushes

INSPECT EXPOSED BRUSH LENGTH

Using a vernier caliper, measure the exposed length.

Standard exposed length:

10.5 mm (0.413 in.)

Minimum exposed length:

1.5 mm (0.059 in.)

If the exposed length is less than minimum, replace the brush holder.

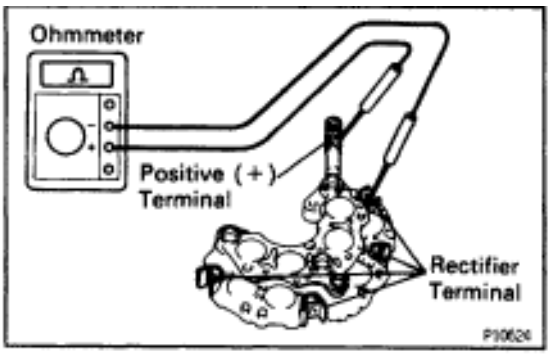

Rectifiers (Rectifier Holder)

1. INSPECT POSITIVE RECTIFIER

(a) Using an ohmmeter, connect one tester probe to the positive (+) terminal and the other to each rectifier terminal.

(b) Reverse the polarity of the tester probes and repeat step (a).

(c) Check that one shows continuity and the other shows no continuity.If continuity is not as specified, replace the rectifier holder.

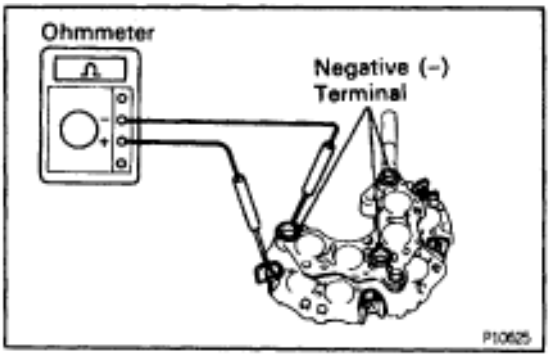

2. INSPECT NEGATIVE RECTIFIER

(a) Using an ohmmeter, connect one tester probe to each negative (–) terminal and the other to each rectifier terminal.

(b) Reverse the polarity of the tester probes and repeat step (a).

(c) Check that one shows continuity and the other shows no continuity.

If continuity is not as specified, replace the rectifier holder.

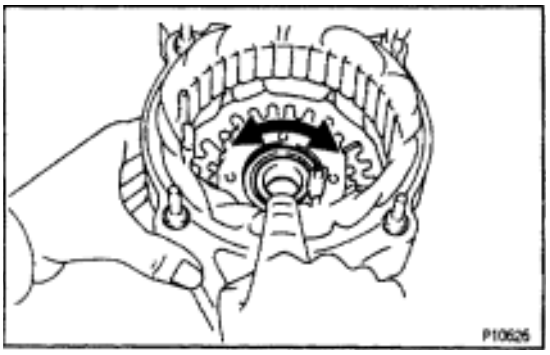

Bearings

1. INSPECT FRONT BEARING

Check that the bearing is not rough or worn.

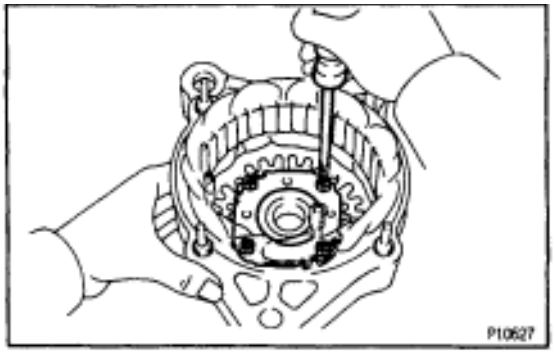

2. IF NECESSARY. REPLACE FRONT BEARING

(a) Remove the 4 screws, bearing retainer and bearing.

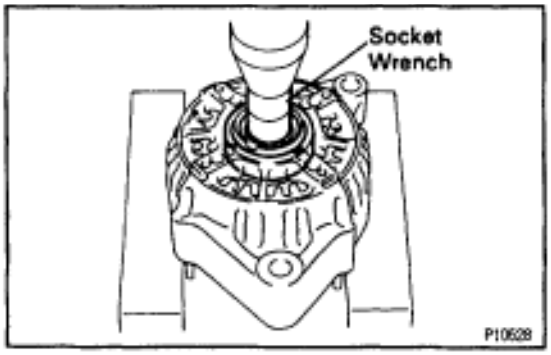

(b) Using a socket wrench and press, press out the bearing.

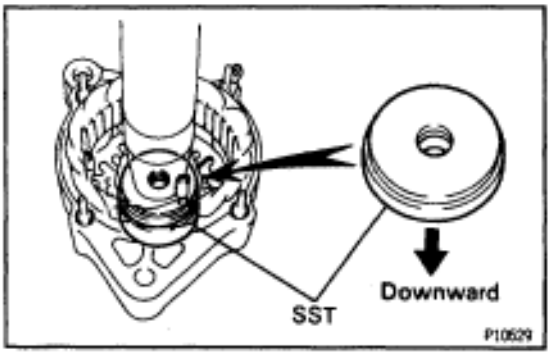

(c) Using SST and a press, press in a new bearing.
SST 09608–20012 (09608–00030)

(d) Install the bearing retainer with the 4 screws.

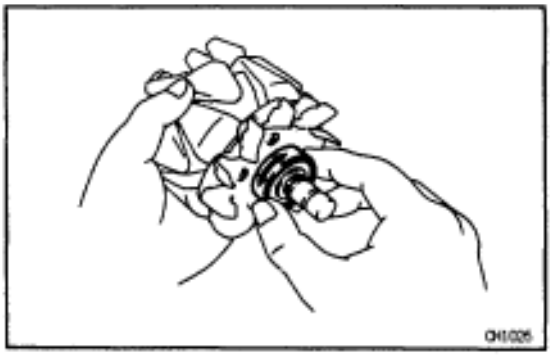

3. INSPECT REAR BEARING

Check that the bearing is not rough or worn.

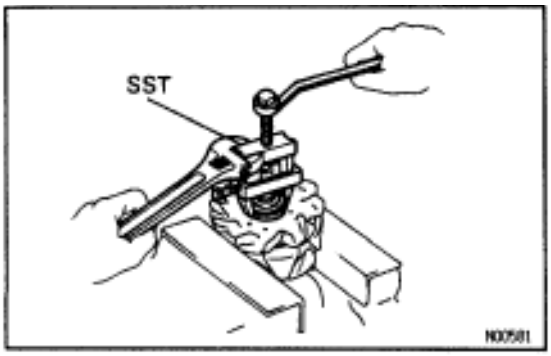

4. IF NECESSARY, REPLACE REAR BEARING

(a) Using SST, remove the bearing cover (outside) and bearing.
SST 09820–00021
NOTICE: Be careful not to damage the fan.

(b) Remove the beating cover (inside).

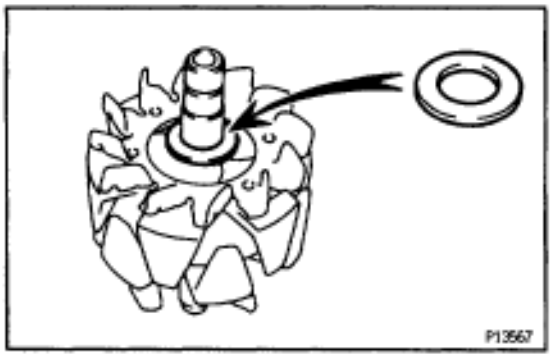

(c) Place the bearing cover (inside) on the rotor.

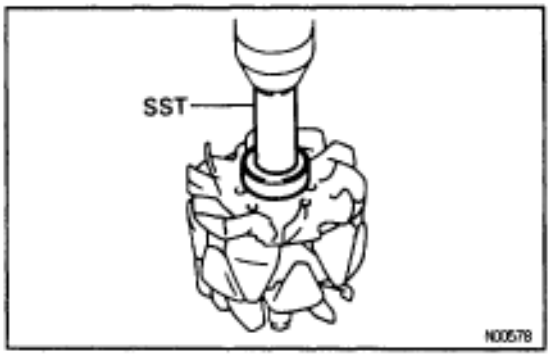

(d) Using SST and a press, press in a new bearing.
SST 09820–00030

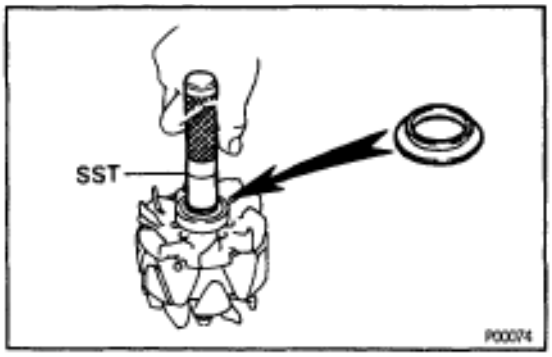

(e) Using SST, push in the bearing cover(outside).
SST 09285–76010

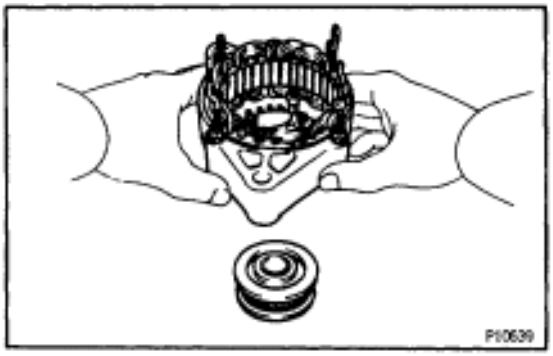

GENERATOR ASSEMBLY

1. PLACE RECTIFIER END FRAME ON PULLEY

2. INSTALL ROTOR TO RECTIFIER END FRAME

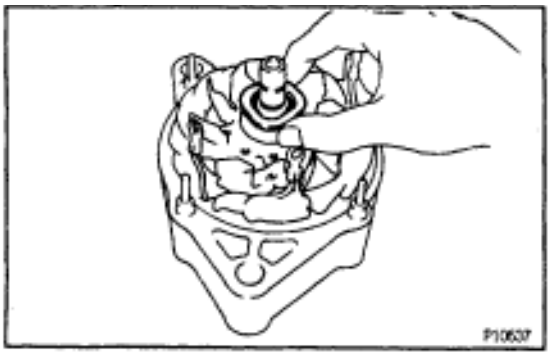

3. INSTALL RECTIFIER END FRAME

(a) Place the generator washer on the rotor.

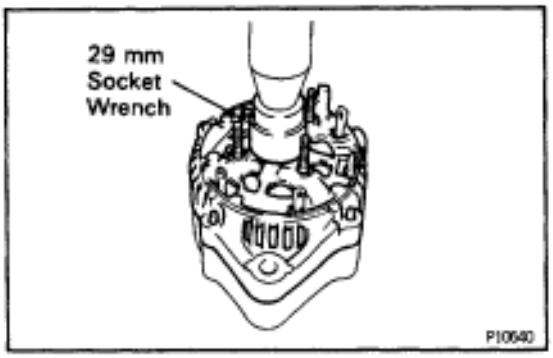

(b) Using a 29 mm socket wrench and press, slowly press in the rectifier end frame.

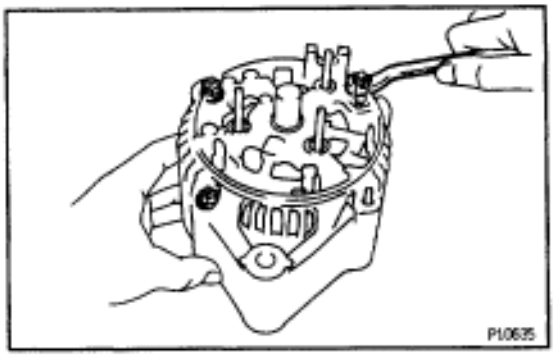

(c) Install the 3 nuts.
Torque: 4.5 N·m (46 kgf·cm, 40 in.·lbf)

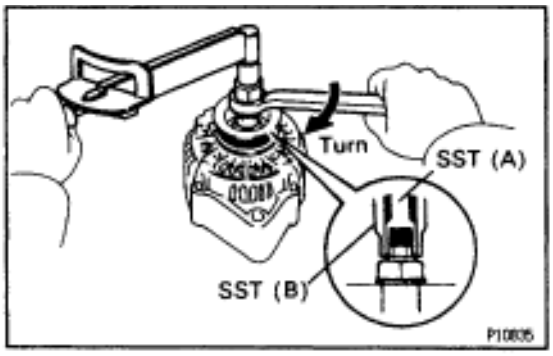

4. INSTALL PULLEY

(a) Install the pulley to the rotor shaft by tightening the pulley nut by hand.

(b) Hold SST (A) with a torque wrench, and tighten SST (b) clockwise to the specified torque.
SST 09820–63010
Torque: 39 N·m (400 kgf·cm, 29 ft·lbf)

(c) Check that SST (A) is secured to the pulley shaft.

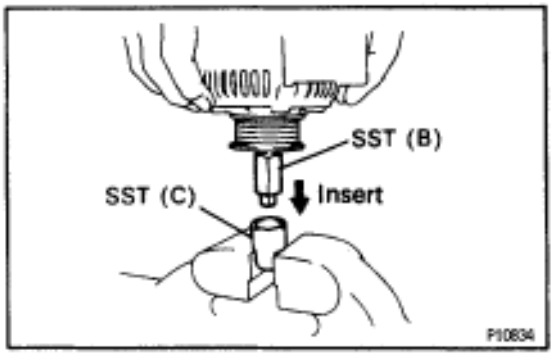

(d) Mount SST (C) in a vise.

(e) Insert SST (B) into SST (C), and attach the pulley nut to SST (C).

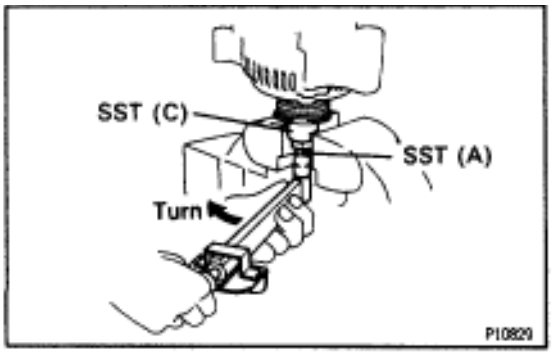

(f) To torque the pulley nut, turn SST (A) in the direction shown in the illustration.
Torque: 110 N·m (1,125 kgf·cm, 81 ft·lbf)

(g) Remove the generator from SST (C).

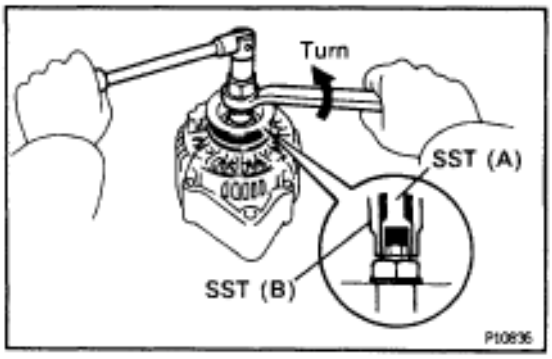

(h) Turn SST (B), and remove SST (A and B).

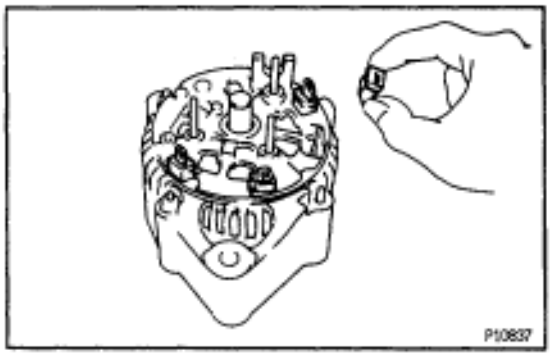

5. INSTALL RECTIFIER HOLDER

(a) Install the 4 rubber insulators on the lead wires.

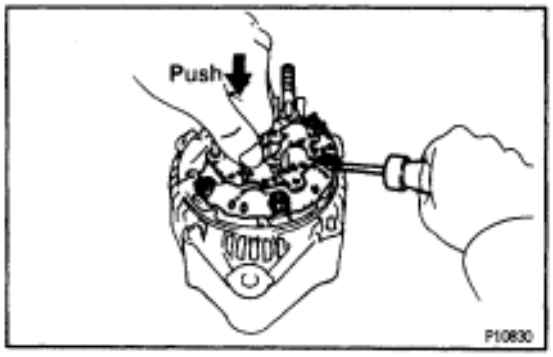

(b) Install the rectifier holder while pushing it with the 4 screws.
Torque: 2.0 N·m (20 kgf·cm, 17 in.·lbf)

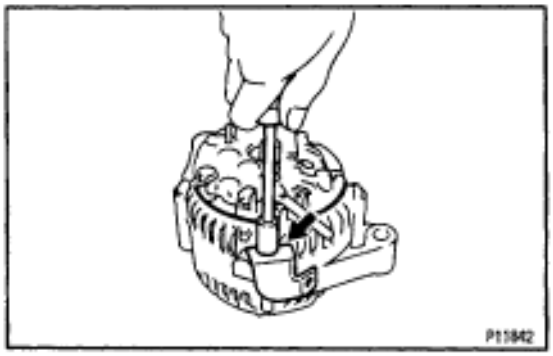

6. INSTALL WIRE CLIP

Install the wire clip with the nut.
Torque: 4.5 N·m (46 kgf·cm, 40 in.·lbf)

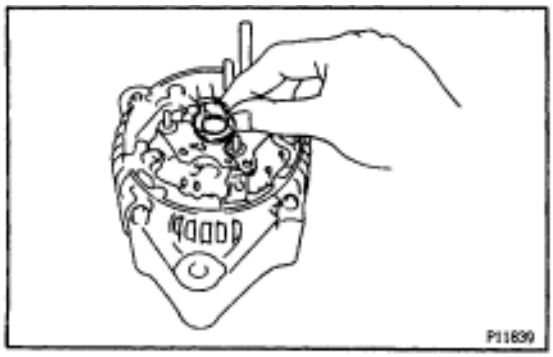

7. INSTALL VOLTAGE REGULATOR AND BRUSH HOLDER

(a) Place the seal plate on the rectifier end frame.

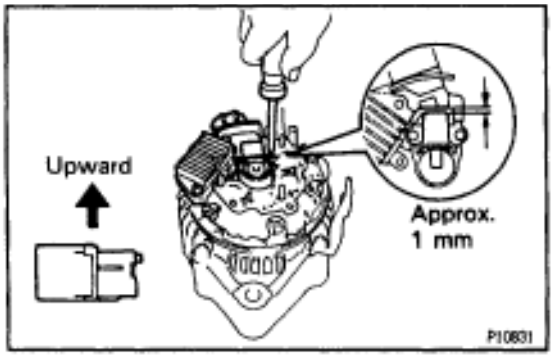

(b) Place the voltage regulator and brush holder on the rectifier end frame.

NOTICE: Be careful of the holder installation direction.

(c) Install the 5 screws until there is a clearance of approx. 1 mm (0.04 in.) between the brush Holder and voltage regulator.

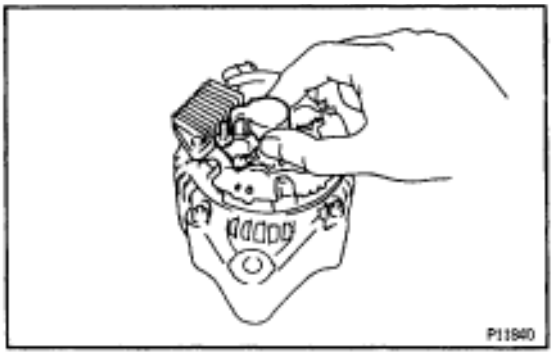

(d) Place the brush holder cover on the brush holder.

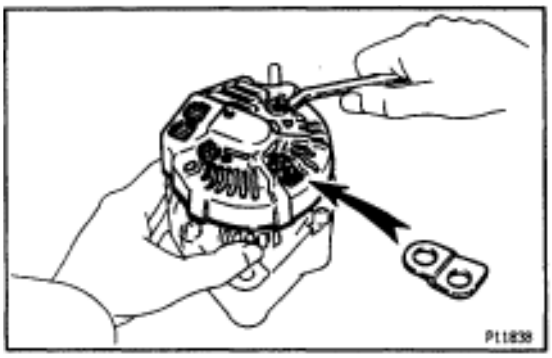

8. INSTALL REAR END COVER

(a) Install the end cover and plate terminal with the bolt and 3 nuts.

Torque:

Nut

4.5 N·m (46 kgf·cm, 40 in.·lbf)

Bolt

3.9 N·m (40 kgf·cm, 35 in.·lbf)

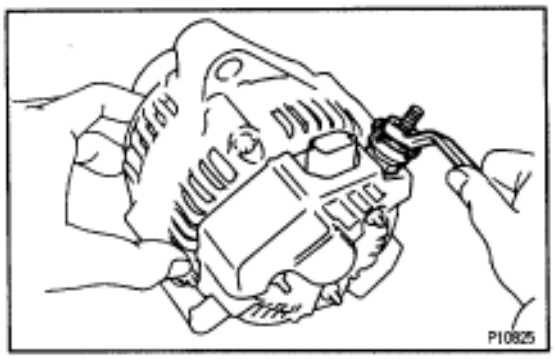

(b) Install the terminal insulator with the nut.

Torque: 6.5 N·m (66 kgf·cm, 58 in.·lbf)

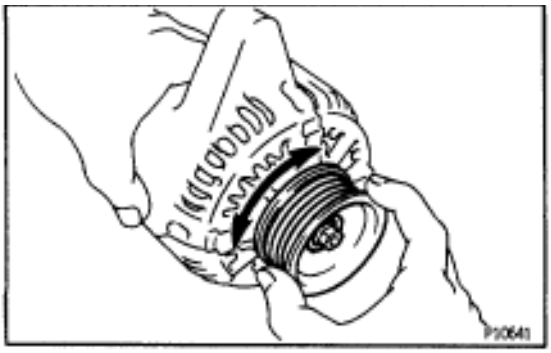

9. CHECK THAT ROTOR ROTATES SMOOTHLY

SERVICE SPECIFICATIONS

SERVICE DATA

Battery	Voltage (Maintenance–free battery) at 20°C (68°F)		12.7–12.9 V
	Specific gravity (Except maintenance–free battery) at 20°C(68°F)		1.27–1.29
Generator	Rated output	2JZ–GE	12 V 90 A
		2JZ–GTE	12 V 100 A
	Rotor coil resistance	at 20°C (68°C)	2.8–3.0 Ω
	Slip ring diameter	STD	14.2–14.4 mm (0.559–0.567 in.)
		Minimum	12.8 mm (0.504 in.)
	Brush exposed length	STD	10.5 mm (0.413 in.)
		Minimum	1.5 mm (0.059 in.)
Voltage regulator	Regulating voltage	at 25°C (77°F)	13.6–14.8 V
		at 115°C (239°F)	13.2–14.0 V

TORQUE SPECIFICATIONS

Part tightened	N·m	kgf·cm	ft·lbf
Rectifier end frame X Drive end frame	4.5	46	40 in.·lbf
Generator pulley X Rotor	110	1,125	81
Rectifier holder X Coil lead on rectifier end frame	2.0	20	17 in.·lbf
Rear end cover X Rectifier holder	4.5	46	40 in.·lbf
Plate terminal X Rectifier holder	3.9	40	35 in.·lbf
Terminal insulator X Rectifier holder	6.5	66	58 in.·lbf
Generator X Water pump	37	380	27
Generator X Cylinder block	37	380	27

CLUTCH

PREPARATION

SST (SPECIAL SERVICE TOOLS)

	09023–00100	Union Nut Wrench 10 mm	Clutch line
	09301–00110	Clutch Guide Tool	
	09303–35011	Input Shaft Front Bearing Puller	
	09304–30012	Input Shaft Front Bearing Replacer	2JZ–GE Only
	09333–00013	Clutch Diaphragm Spring Aligner	

RECOMMENDED TOOLS

	09082–00050	TOYOTA Electrical Tester Set	
	09905–00012	Snap Ring No. 1 Expander	

EQUIPMENT

Calipers	
Dial indicator	
Torque wrench	

TROUBLESHOOTING

Use the table below to help you find the cause of the problem. The numbers indicate the priority of the likely cause of the problem. Check each part in order. If necessary, replace these parts.

See page / Parts Name / Trouble	Clutch pedal (freeplay out of adjustment) CL–4	Clutch line (Air in line)	master cylinder cup (Damaged) CL–6	Release cylinder cup (Damaged) CL–8 CL–9	Engine mounting (loosen)	Release bearing (Worn, dirty or damaged) CL–11 CL–17	Pilot bearing (Worn or damaged) CL–11 CL–17	Input shaft bearing (Worn or damaged)	Clutch disc (Out of true) CL–11 CL–17	Clutch disc (Runout is excessive) CL–11 CL–17	Clutch disc (Lining broken) CL–11 CL–17	Clutch disc (Dirty or burred) CL–11 CL–17	Clutch disc (Oily) CL–11 CL–17	Clutch disc (Worn out) CL–11 CL–17	Clutch disc torsion rubber (Damaged) CL–11 CL–17	Clutch disc (Glazed) CL–11 CL–17	Clutch disc (Lack of spline grease) CL–15 CL–21	Diaphragm spring (Damaged) CL–11 CL–17	Diaphragm spring (Out of tip alignment) CL–15 CL–20	Pressure plate (Distortion) CL–11 CL–17	Flywheel (Distortion)
Clutch grabs/chatters					1					2			2	2	2	2			2		
Clutch pedal spongy		1	2	2																	
Clutch noisy						1	2	3							4						
Clutch slips	1												2	2				3		4	5
Clutch does not disengage	1	2	3	4			6	5	6	6	6	6	6				6	7	7	8	

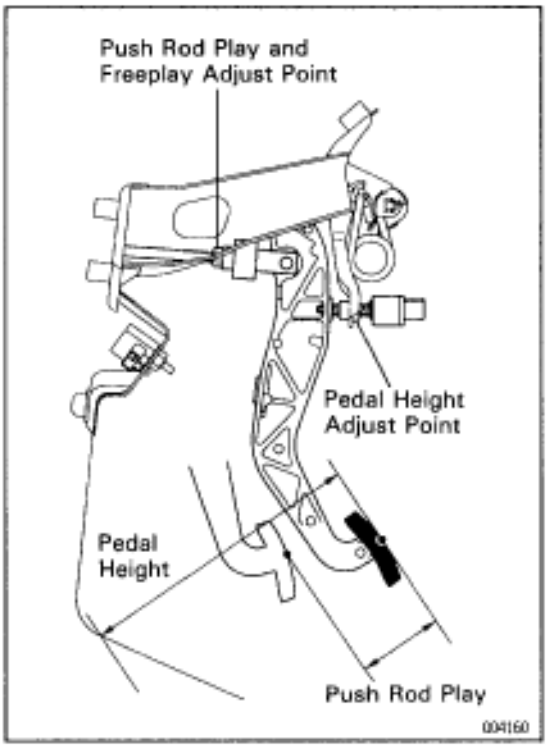

CLUTCH PEDAL

CLUTCH PEDAL CHECK AND ADJUSTMENT

1. CHECK PEDAL HEIGHT

Pedal height from asphalt sheet:

146.2–156.2 mm (5.76–6.15 in.)

2. IF NECESSARY, ADJUST PEDAL HEIGHT

Loosen the lock nut and clutch switch until the height is correct. Tighten the lock nut.

HINT: Before rotating the clutch switch for pedal height adjustment, disconnect the clutch switch connector.

3. CHECK PEDAL FREEPLAY AND PUSH ROD PLAY

Push in on the pedal until the beginning of clutch resistance is felt.

Pedal freeplay: 5.0–15.0 mm (0.197–0.591 in.)

Gently push on the pedal until the resistance begins to increase a little.

Push rod play at pedal top:

1.0–5.0 mm (0.039–0.197 in.)

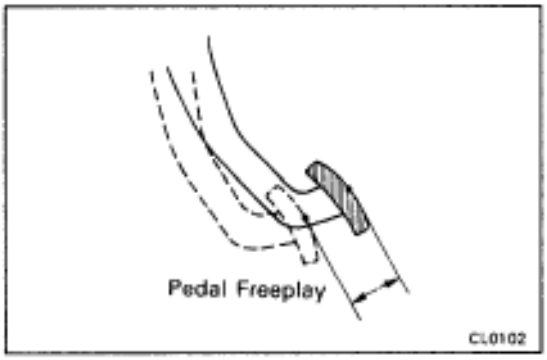

4. IF NECESSARY, ADJUST PEDAL FREEPLAY AND PUSH ROD PLAY

(a) Loosen the lock nut and turn the push rod until the freeplay and push rod play are correct.

(b) Tighten the lock nut.

(c) After adjusting the pedal freeplay, check the pedal height.

5. INSPECT FULL PEDAL STROKE

Full pedal stroke: 132.0–138.0 mm (5.20–5.43 in.)

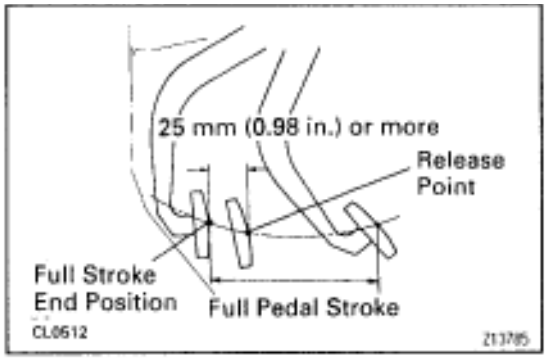

6. INSPECT CLUTCH RELEASE POINT

(a) Pull the parking brake lever and install wheel stopper.

(b) Start the engine and idle the engine.

(c) Without depressing the clutch pedal, slowly shift the shift lever into position until the gears contact.

(d) Gradually depress the clutch pedal and measure the stroke distance from the point the gear noise stops (release point) up to the full stroke end position.

Standard distance: 25 mm (0.98 in.) or more

(From pedal stroke end position to release point)

If the distance is not as specified, do the following operation.

- Inspect pedal height.
- Inspect push rod play and pedal freeplay.
- Bleed the clutch line.
- Inspect the clutch cover and disc.

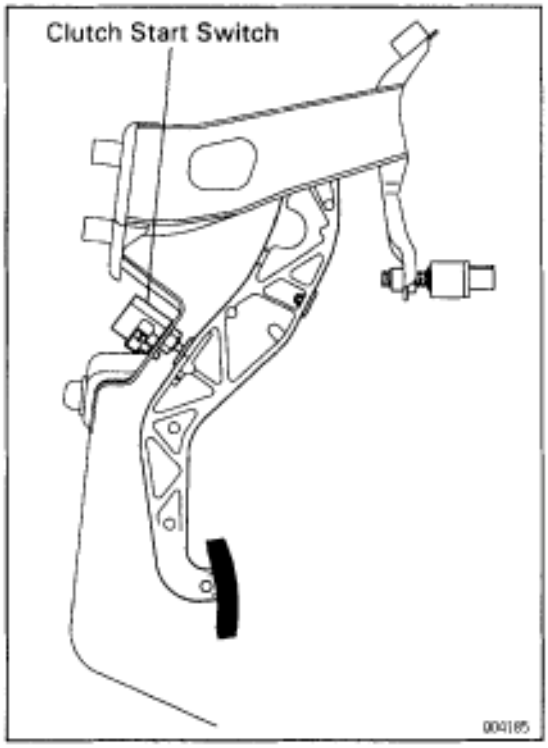

7. CHECK CLUTCH START SYSTEM

(a) Check that the engine does not start when the clutch pedal is released.

(b) Check that the engine starts when the clutch pedal is fully depressed.

If necessary, adjust or replace the clutch start switch.

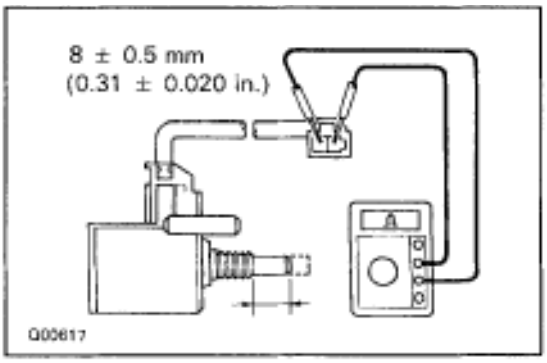

8. INSPECT CONTINUITY OF CLUTCH START SWITCH

(a) Check that there is continuity between terminals when the switch is ON (pushed).

(b) Check that there is no continuity between terminals when the switch is OFF (free).

If continuity is not as specified, replace the switch.

CLUTCH MASTER CYLINDER

COMPONENTS

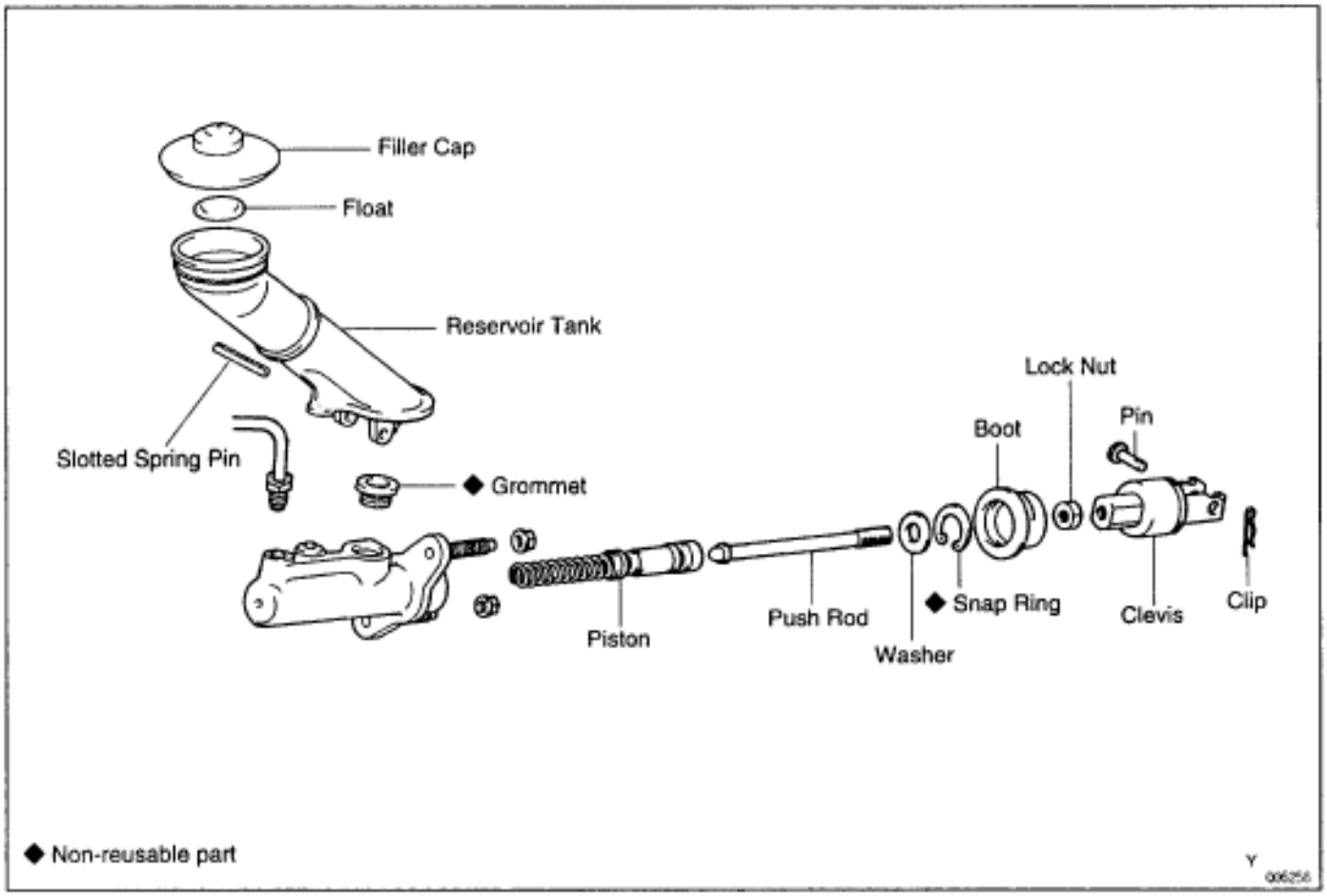

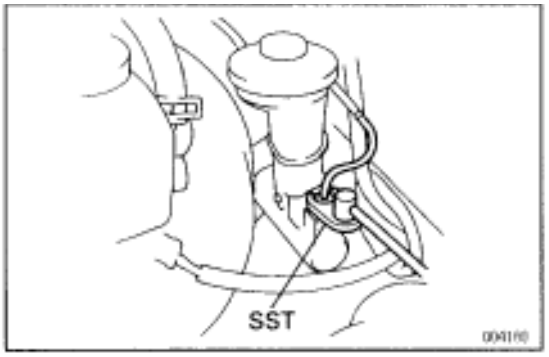

MASTER CYLINDER REMOVAL

Installation is in the reverse order of removal.

1. **DRAIN OUT FLUID WITH SYRINGE**
   INSTALLATION HINT: After installation, adjust the clutch pedal and bleed the clutch system.
2. **DISCONNECT CLUTCH LINE UNION**
   Using SST, disconnect the union nut.
   SST 09023–00100
   Torque: 15 N·m (155 kgf·cm, 11 ft·lbf)
3. **REMOVE CLIP AND PIN**
4. **REMOVE 2 MOUNTING NUTS AND PULL OUT MASTER CYLINDER**
   Torque: 12 N·m (125 kgf·cm, 9 ft·lbf)

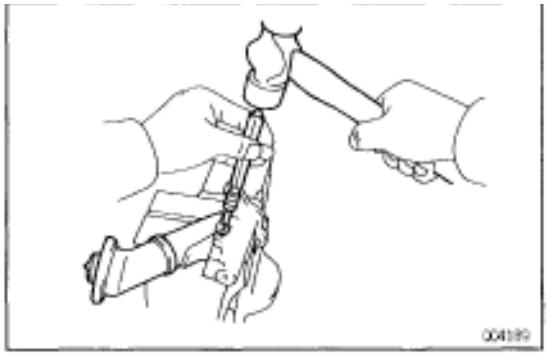

MASTER CYLINDER DISASSEMBLY

1. REMOVE RESERVOIR TANK

(a) Using a pin punch and hammer, drive out the slotted spring pin.

(b) Remove the reservoir tank and grommet.

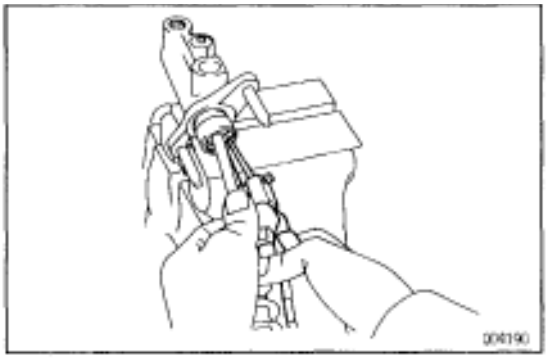

2. REMOVE PUSH ROD

(a) Pull back the boot, and using snap ring pliers, remove the snap ring.

(b) Pull out the push rod.

3. REMOVE PISTON

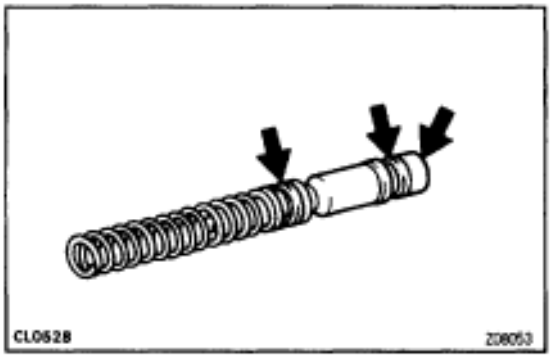

MASTER CYLINDER ASSEMBLY

1. COAT PARTS WITH LITHIUM SOAP BASE GLYCOL GREASE, AS SHOWN

2. INSERT PISTON INTO CYLINDER

3. INSTALL PUSH ROD ASSEMBLY WITH NEW SNAP RING

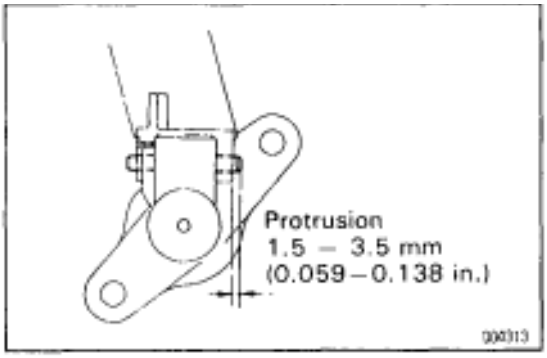

4. INSTALL RESERVOIR TANK

(a) Install the reservoir tank and a new grommet.

(b) Using a pin punch and hammer, drive in the slotted spring pin.

CLUTCH RELEASE CYLINDER (2JZ–GTE)

COMPONENTS

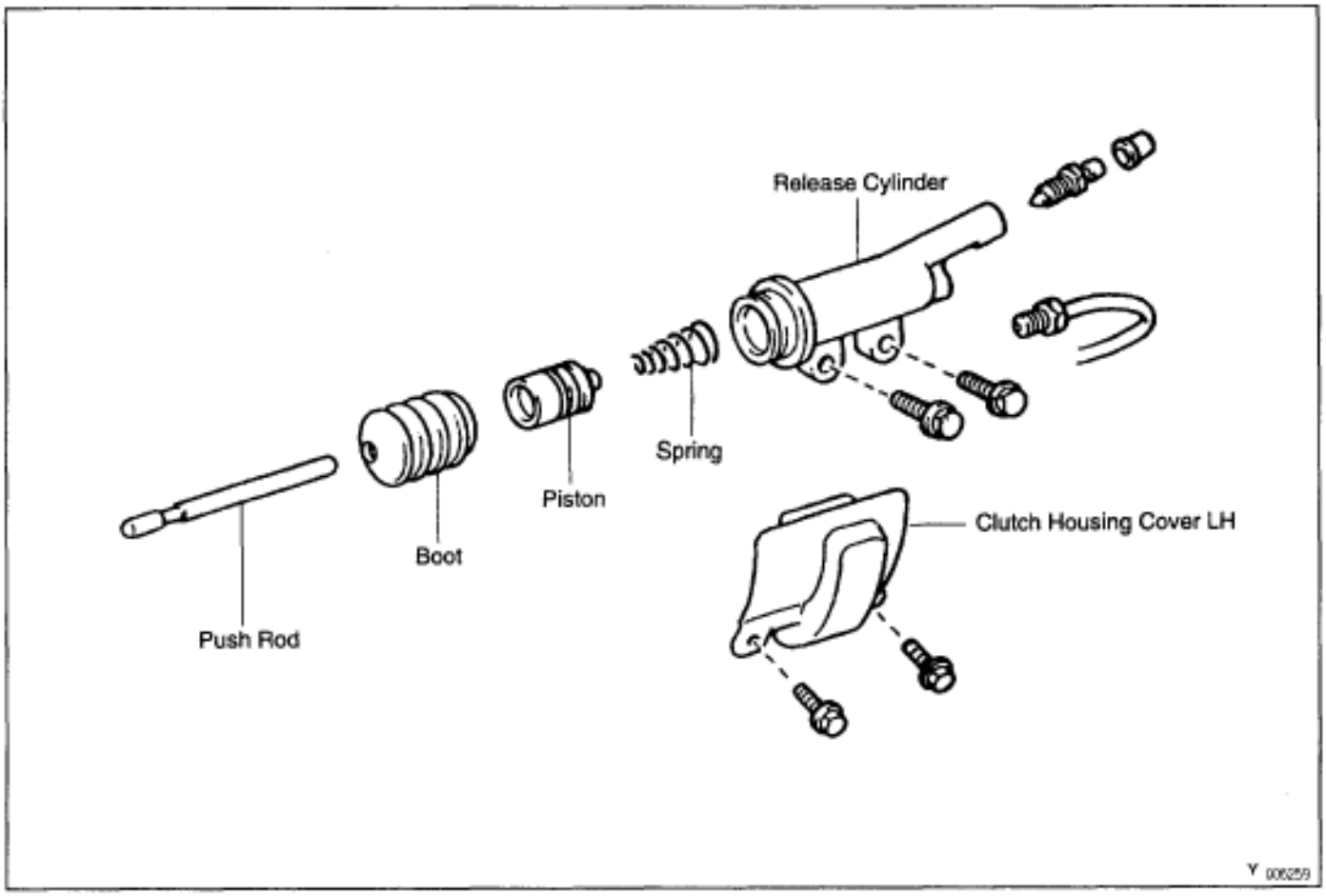

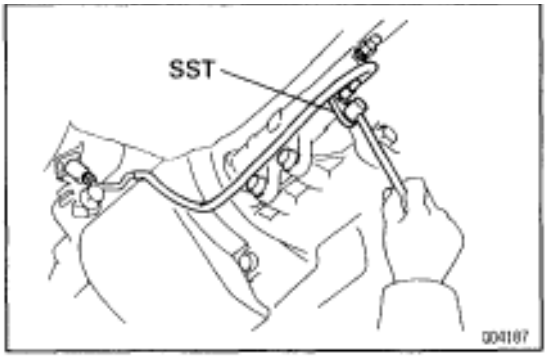

RELEASE CYLINDER REMOVAL

Installation is in the reverse order of removal.

INSTALLATION HINT: After installation, adjust the clutch pedal and bleed the clutch system.

1. **REMOVE CLUTCH HOUSING COVER LH**
   Remove the 2 bolts.
   Torque: 12 N·m (120 kgf·cm, 9 ft·lbf)
2. **DISCONNECT CLUTCH LINE**
   Using SST, disconnect the clutch line union. Use a container to catch the fluid.
   SST 09023–00100
   Torque: 15 N·m (155 kgf·cm, 11 ft·lbf)
3. **REMOVE 2 BOLTS AND PULL OUT RELEASE CYLINDER**
   Torque: 12 N·m (120 kgf·cm, 9 ft·lbf)

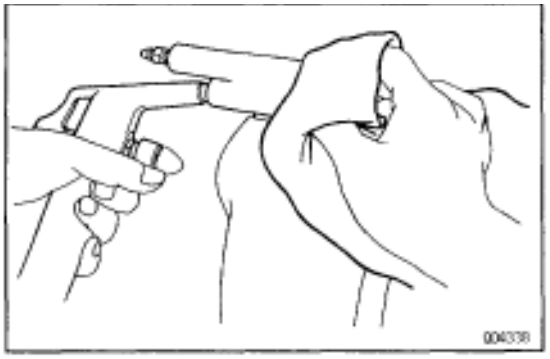

RELEASE CYLINDER DISASSEMBLY

1. **PULL OUT PUSH ROD WITH BOOT**
2. **REMOVE PISTON WITH SPRING**
   Using compressed air, remove the piston and spring from the cylinder.

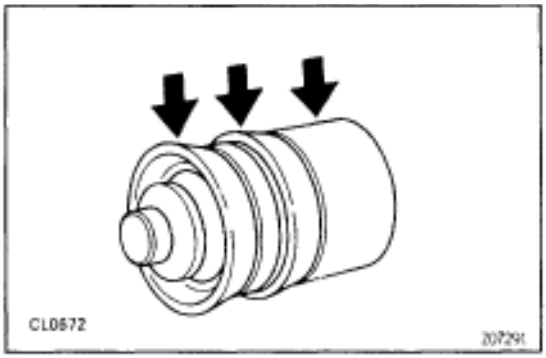

RELEASE CYLINDER ASSEMBLY

1. **COAT PISTON WITH LITHIUM SOAP BASE GLYCOL GREASE, AS SHOWN**
2. **INSTALL PISTON WITH SPRING INTO CYLINDER**
3. **INSTALL BOOT WITH PUSH ROD TO CYLINDER**

CLUTCH RELEASE CYLINDER (2JZ–GE)

COMPONENTS

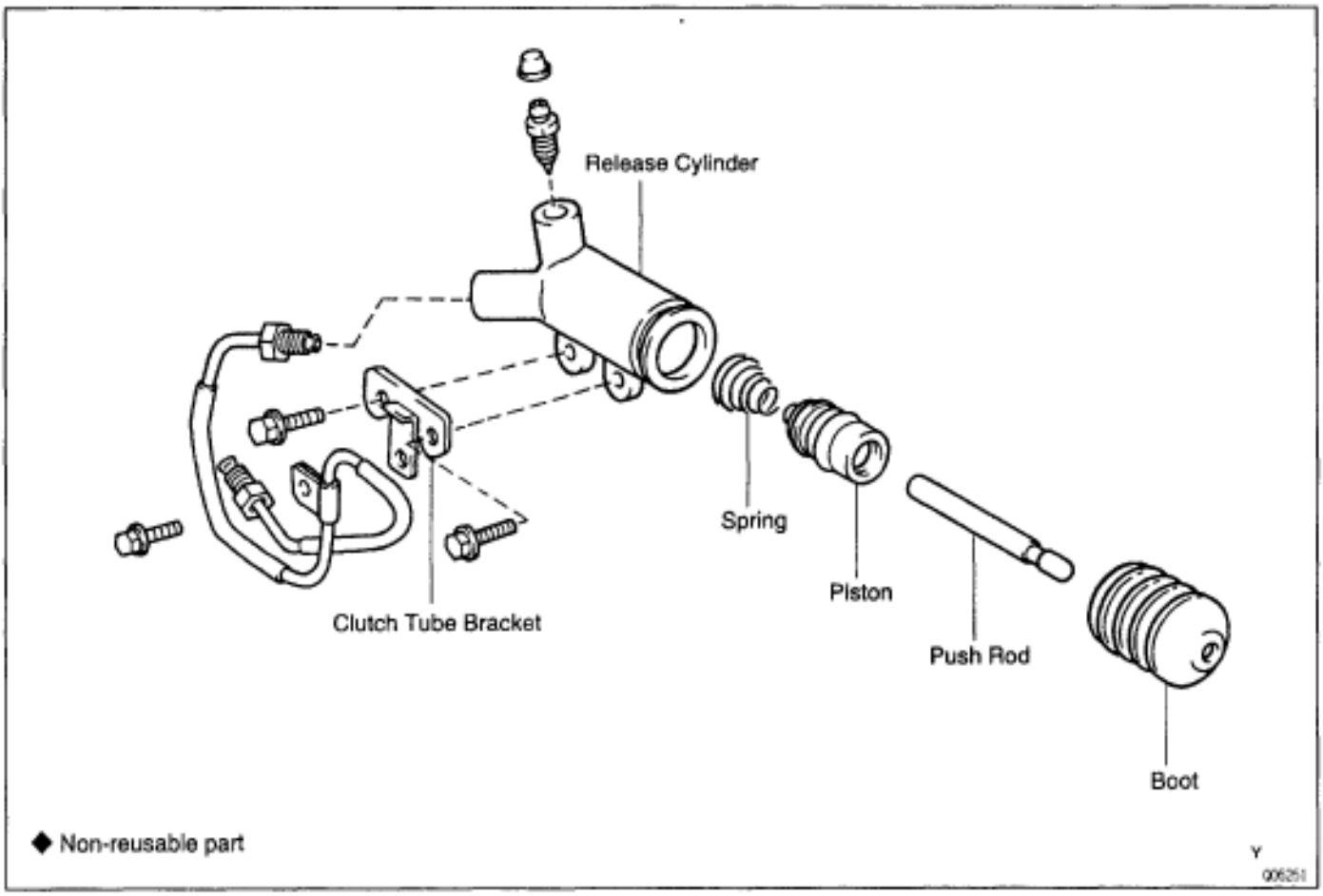

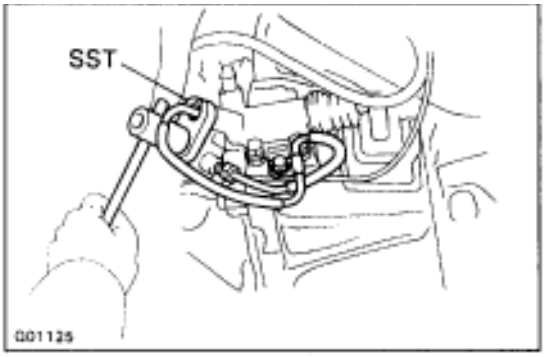

RELEASE CYLINDER REMOVAL

Installation is in the reverse order of removal.

INSTALLATION HINT: After installation, adjust the clutch pedal and bleed the clutch system.

1. **DISCONNECT CLUTCH LINE**

   Using SST, disconnect the clutch line union. Use a container to catch the fluid.

   SST 09023–00100

   Torque: 15 N·m (155 kgf·cm, 11 ft·lbf)

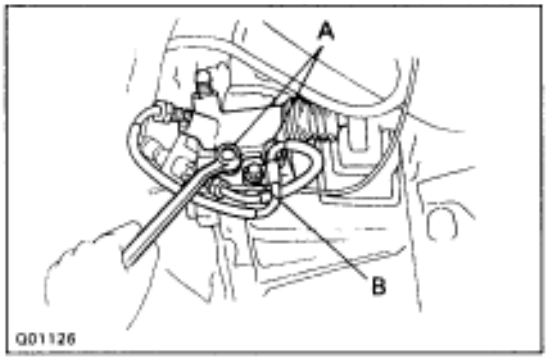

2. **REMOVE RELEASE CYLINDER WITH 3 BOLTS**

   Torque:

   A: 12 N·m (120 kgf·cm, 9 ft·lbf)

   B: 4.9 N·m (50 kgf·cm, 43 in.·lbf)

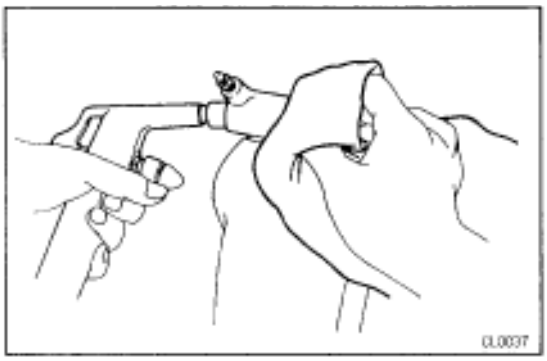

RELEASE CYLINDER DISASSEMBLY

1. **PULL OUT PUSH ROD WITH BOOT**
2. **REMOVE PISTON WITH SPRING**

   Using compressed air, remove the piston and spring from the cylinder.

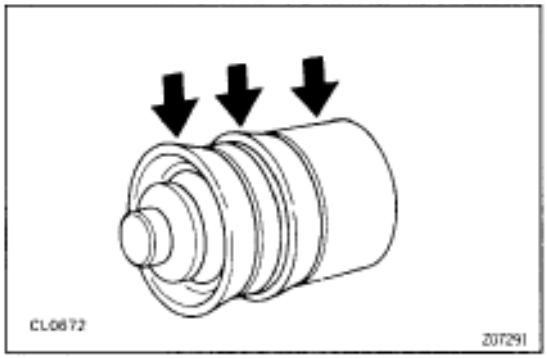

RELEASE CYLINDER ASSEMBLY

1. **COAT PISTON WITH LITHIUM SOAP BASE GLYCOL GREASE, AS SHOWN**
2. **INSTALL PISTON WITH SPRING INTO CYLINDER**
3. **INSTALL BOOT WITH PUSH ROD TO CYLINDER**

CLUTCH UNIT (2JZ–GTE)

COMPONENTS

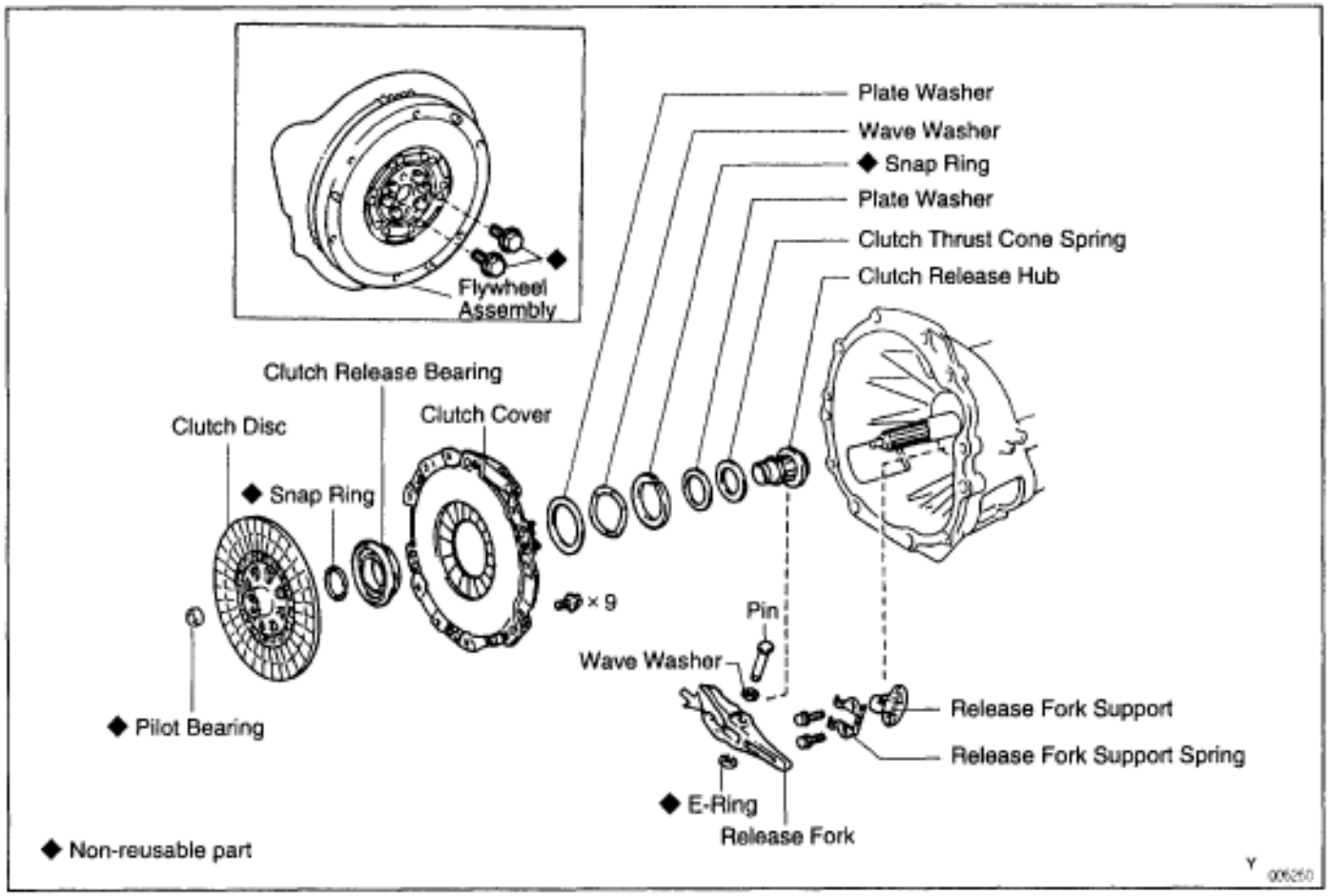

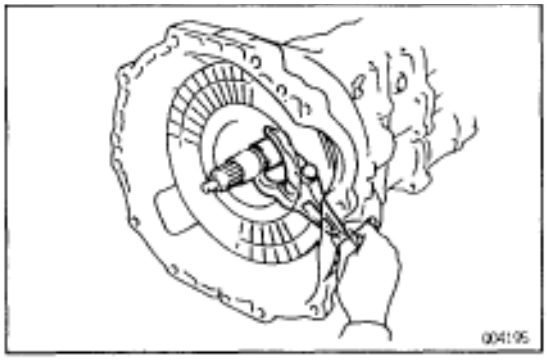

CLUTCH UNIT REMOVAL

1. **REMOVE TRANSMISSION FROM ENGINE**
   (See page MT2–5**)**
   HINT: Do not drain the transmission oil.
2. **REMOVE RELEASE FORK ASSEMBLY**

(a) Remove the release fork assembly from the left side of clutch housing service hole.

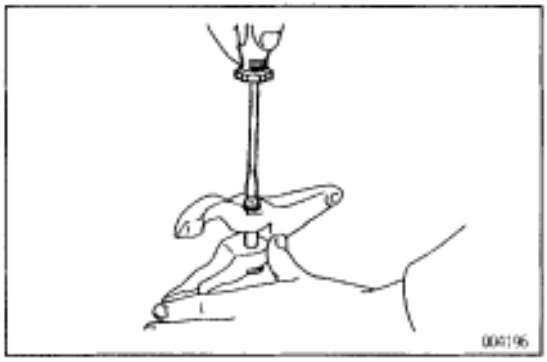

(b) Remove the E–ring from the release fork.
(c) Remove the pin and wave washer from the release fork.

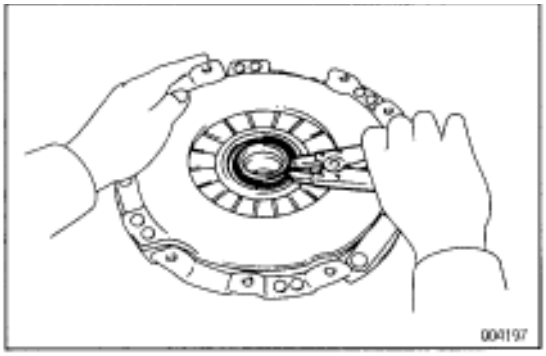

3. REMOVE CLUTCH DISC

4. REMOVE CLUTCH COVER ASSEMBLY

5. REMOVE CLUTCH RELEASE BEARING HUB

(a) Using a snap ring expander, remove the snap ring.

(b) Remove the release bearing hub, thrust cone spring and plate washer.

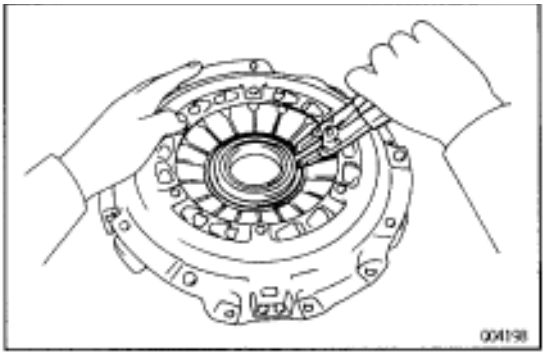

6. REMOVE CLUTCH RELEASE BEARING

(a) Using a snap ring expander, remove the snap ring.

(b) Remove the release bearing, wave washer and plate washer.

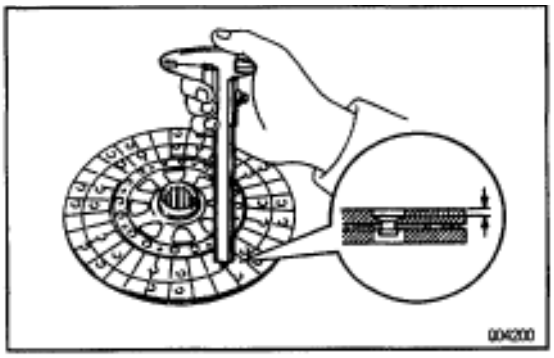

CLUTCH PARTS INSPECTION AND REPAIR

1. INSPECT CLUTCH DISC FOR WEAR OR DAMAGE

Using calipers, measure the rivet head depth.

Minimum rivet depth:

0.3 mm (0.012 in.)

If a problem is found, replace the clutch disc.

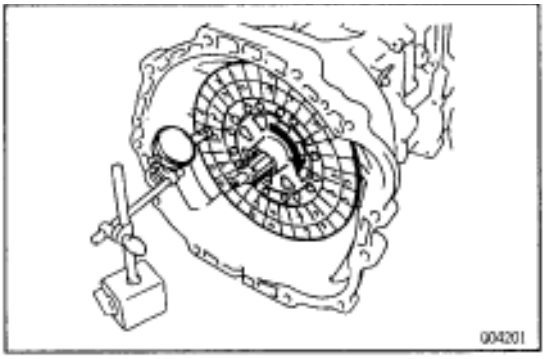

2. INSPECT CLUTCH DISC RUNOUT

Using a dial indicator, check the disc runout.

Maximum runout:

0.8 mm (0.031 in.)

If runout is excessive, replace the clutch disc.

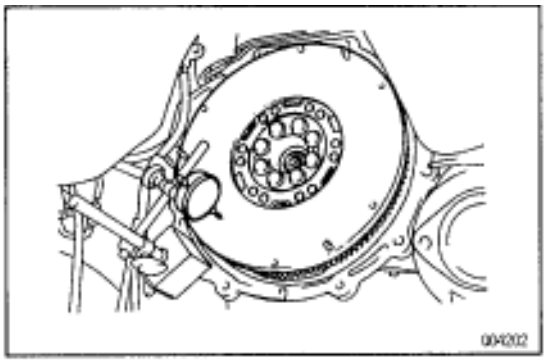

3. INSPECT FLYWHEEL RUNOUT

Using a dial indicator, check the flywheel runout.

Maximum runout:

0.1 mm (0.004 in.)

If runout excessive, replace the flywheel.

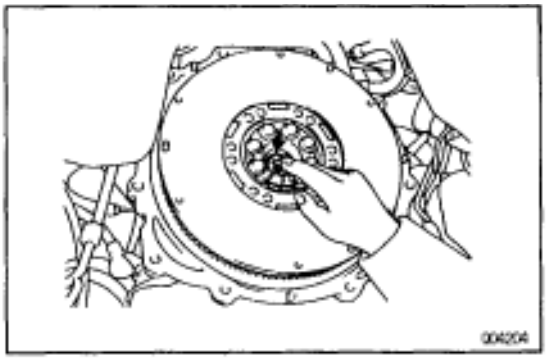

4. INSPECT PILOT BEARING

Turn the bearing by hand while applying force in the axial direction.

If the bearing sticks or has much resistance, replace the pilot bearing.

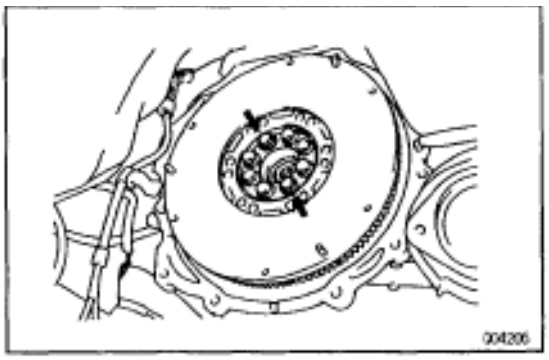

5. IF NECESSARY, REPLACE PILOT BEARING

(a) Remove the 2 bolts at diametrically opposite points.

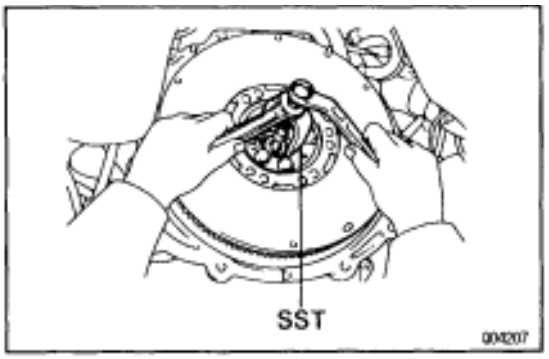

(b) Using SST, remove the pilot bearing.
SST 09303–35011

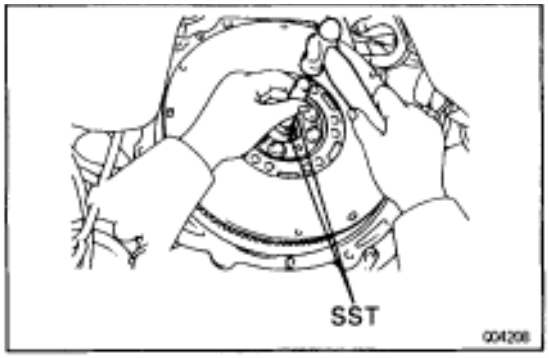

(c) Using SST and a hammer, drive in a new pilot bearing.
SST 09301–00110

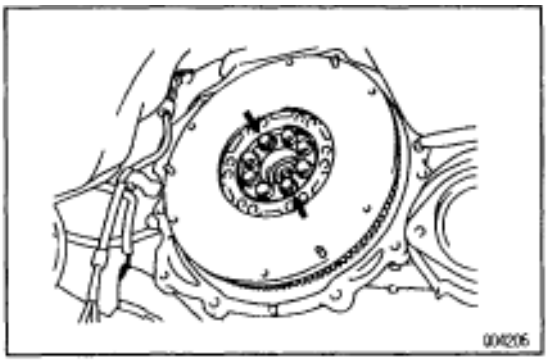

(d) Install 2 new bolts.

(e) First, torque the 2 bolts uniformly a little at a time.
Torque: 49 N·m (500 kgf·cm, 36 ft·lbf)

(f) Then tighten the 2 bolts an additional 80–100°.

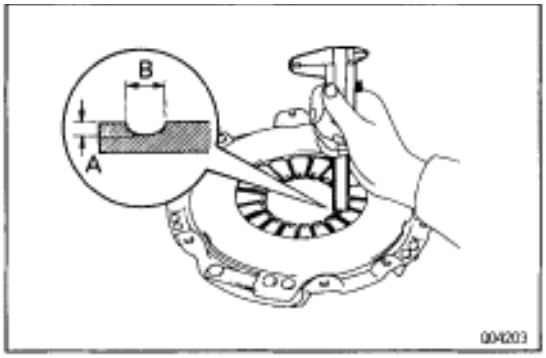

6. INSPECT DIAPHRAGM SPRING FOR WEAR

Using calipers, measure the diaphragm spring for depth and width of wear.

Maximum:

A: Depth 0.6 mm (0.024 in.)

B: Width 5.0 mm (0.197 in.)

If necessary, replace the clutch cover.

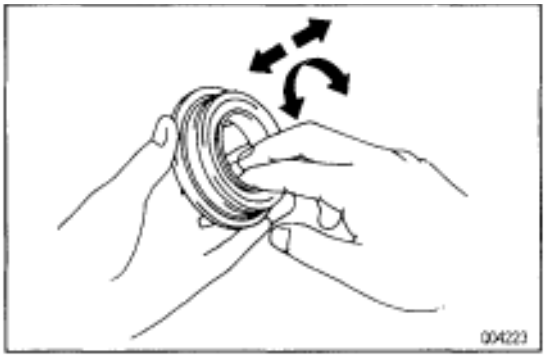

7. INSPECT RELEASE BEARING

Turn the bearing by hand while applying force in the axial direction.

HINT: The bearing is permanently lubricated and requires no cleaning or lubrication.

If a problem is found, replace the bearing together with the hub.

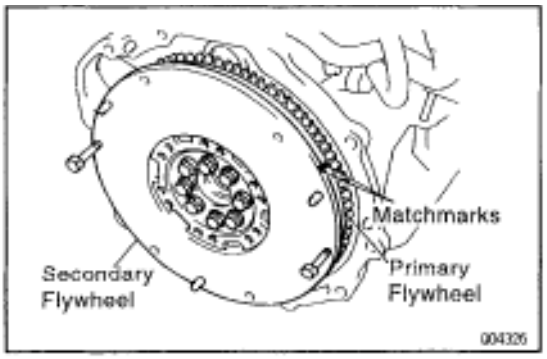

8. INSPECT FLYWHEEL DAMPER FOR GREASE LEAKAGE

If grease has sprayed onto the clutch housing, replace the flywheel assembly.

9. INSPECT FLYWHEEL DAMPER ROTATIONAL FREEPLAY

(a) Install the 2 bolts to the secondary flywheel at diametrically opposite positions.

(b) Holding both the bolts, turn the secondary flywheel clockwise until it stops.

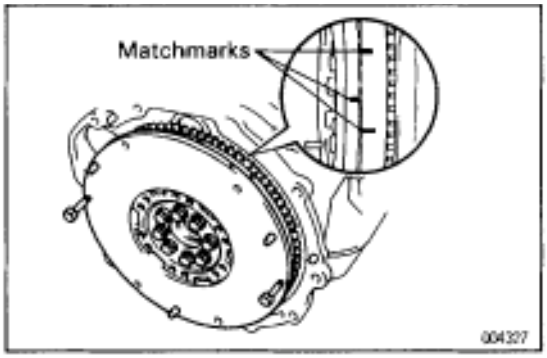

(c) Put matchmarks on the primary and secondary fly–wheels at this position.

(d) Then rotate the primary flywheel counterclockwise by hand until it stops.

(e) Put matchmarks on the primary flywheel at this position.

(f) Measure the circumferential length between the 2 matchmarks on the secondary flywheel.

Standard:

105 mm (4.134 in.)

(g) Repeat the preceding steps (d) to (f) 4 times and if the measurement is greater than the maximum length replace the flywheel assembly.

(See page EG–122)

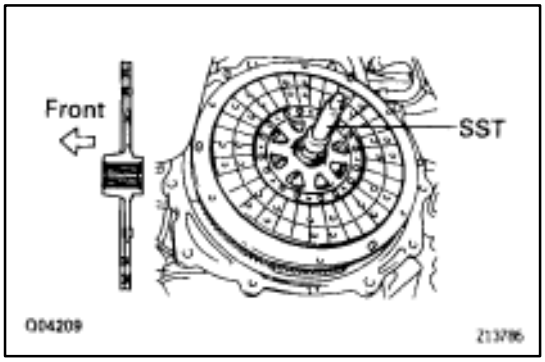

CLUTCH UNIT INSTALLATION

1. INSTALL CLUTCH DISC AND COVER ON FLY–WHEEL

(a) Insert SST in the clutch disc, and then set them and the cover in position.
SST 09301–00110

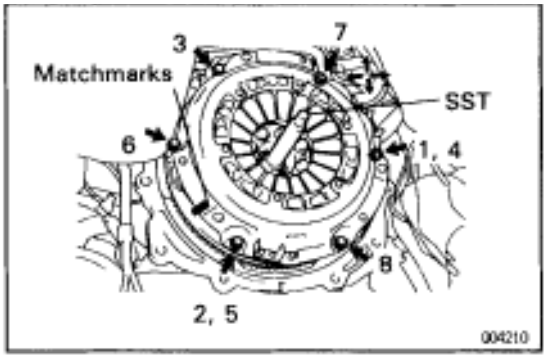

(b) Align the matchmarks on the clutch cover and fly–wheel.
(c) Tighten the bolts evenly and gradually while pushing the SST. Make several passes around the cover until it is snug.
(d) Torque the bolts on the clutch cover in the order shown.
Torque: 19 N·m (195 kgf·cm, 14 ft·lbf)
HINT: Temporarily tighten the No.1 and No.2 bolts.

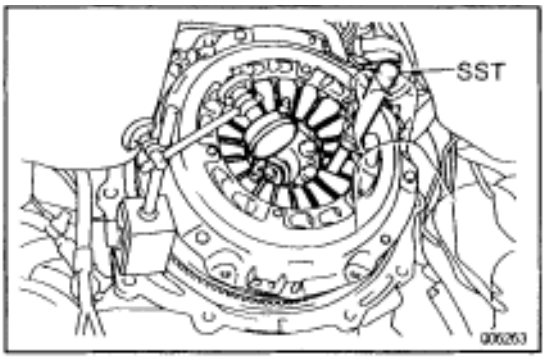

2. CHECK DIAPHRAGM SPRING TIP ALIGNMENT

Using a dial indicator with roller instrument, check the diaphragm spring tip alignment.
Maximum non–alignment:
0.5 mm (0.020 in.)
If alignment is not as specified, use the SST to adjust the diaphragm spring tip alignment.
SST 09333–00013

3. REMOVE CLUTCH COVER AND CLUTCH DISC

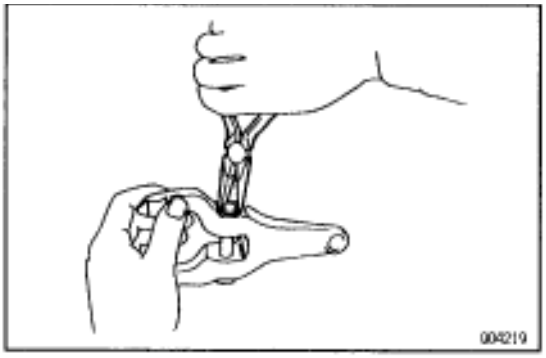

4. INSTALL CLUTCH RELEASE FORK

(a) Install the wave washer and pin to release fork.
(b) Install a new E–ring.

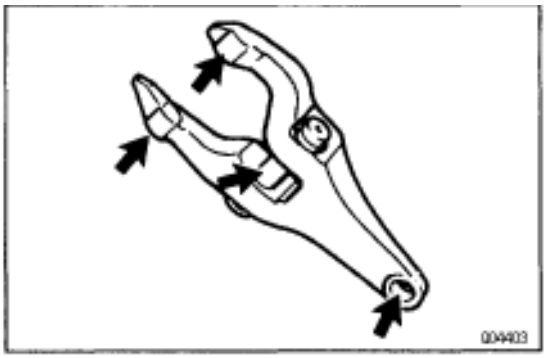

5. APPLY MOLYBDENUM DISULPHIDE LITHIUM BASE GREASE (NLGI NO.2)

(a) Apply release hub grease to these parts:
- Release fork and hub contact point
- Release fork and push rod contact point
- Release fork pivot point

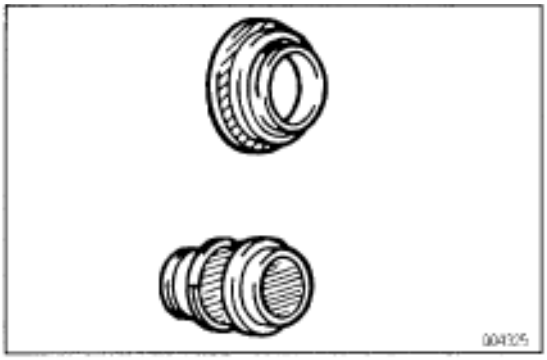

- Release bearing hub inside groove
- Release bearing front surface

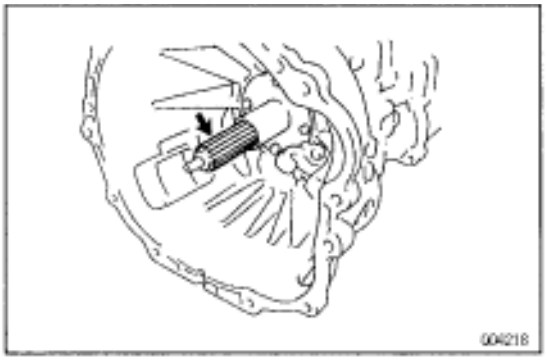

(b) Apply clutch spline grease.
- Clutch disc spline

HINT: Recommended grease part number 08887–01706.

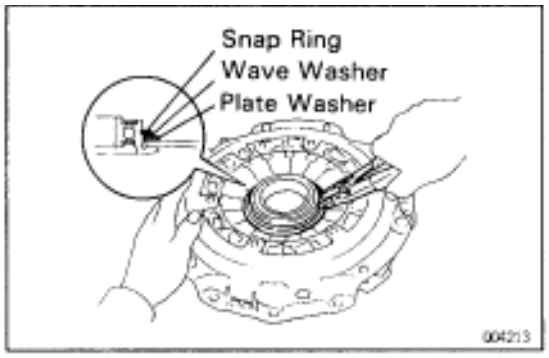

6. INSTALL CLUTCH RELEASE BEARING

(a) Install the release bearing hub, wave washer and plate washer.

(b) Using a snap ring expander, install a new snap ring.

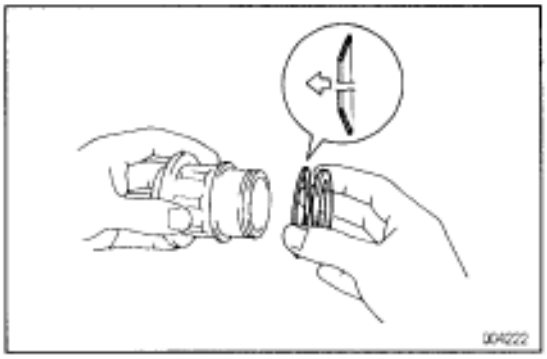

7. INSTALL CLUTCH RELEASE BEARING HUB

(a) Install the thrust cone washer and plate washer to release bearing hub.

NOTICE: Install the thrust cone washer in correct direction.

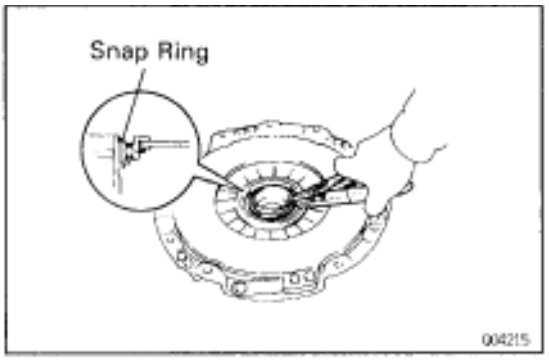

(b) Install the release bearing hub to release bearing.

(c) Using a snap ring expander, install a new snap ring.

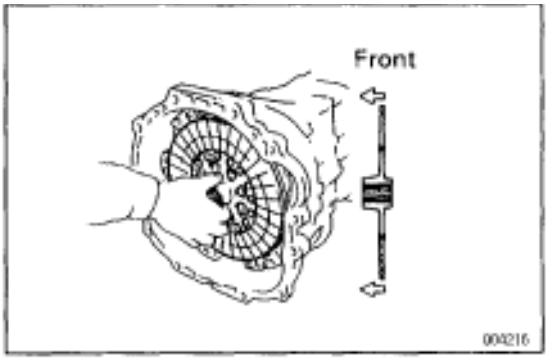

8. INSTALL CLUTCH COVER ASSEMBLY

9. INSTALL CLUTCH DISC

NOTICE: Install the clutch disc in the correct direction.

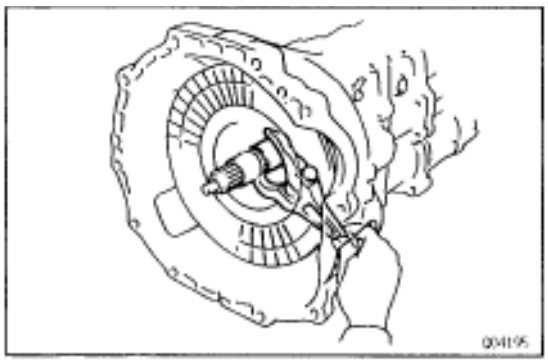

10. INSTALL RELEASE FORK ASSEMBLY

Install the release bearing assembly to the release fork assembly, and then install them to the transmission.

11. INSTALL TRANSMISSION TO ENGINE

(See page MT2–5**)**

CLUTCH UNIT (2JZ–GE)

COMPONENTS

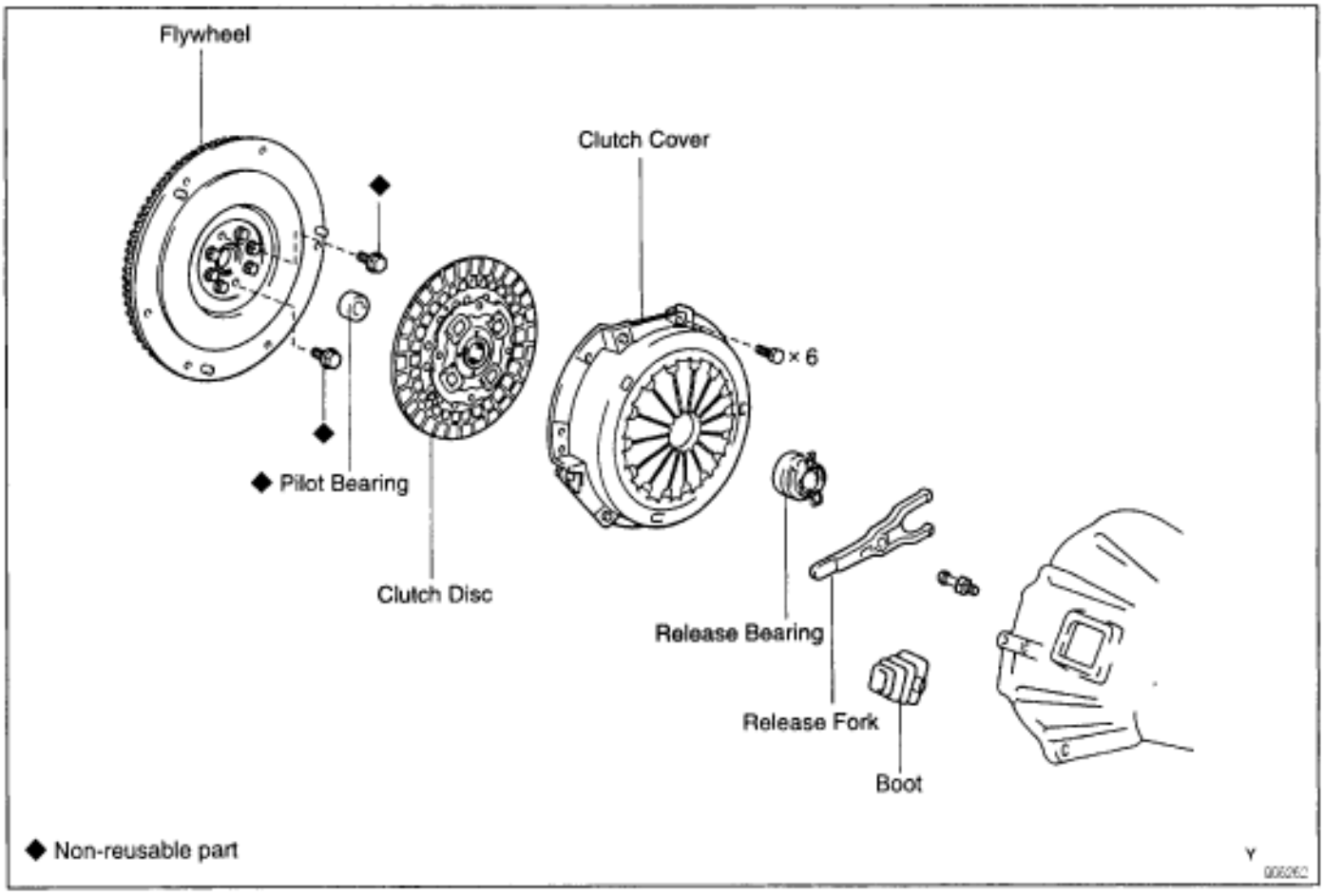

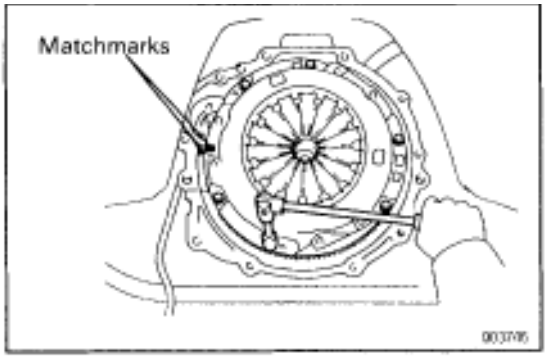

CLUTCH UNIT REMOVAL

1. REMOVE TRANSMISSION FROM ENGINE
(See page MT1–8)
HINT: Do not drain the transmission oil.

2. REMOVE CLUTCH COVER AND DISC

(a) Place matchmarks on the flywheel and clutch cover.

(b) Loosen each set bolt one turn at a time until spring tension is released.

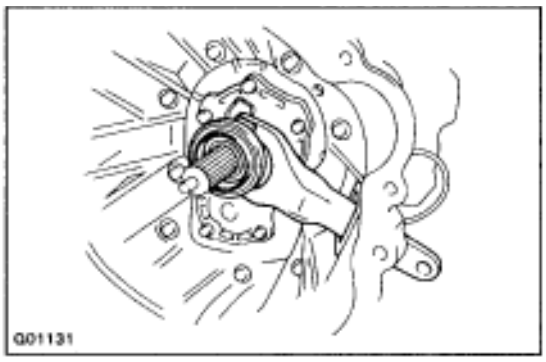

(c) Remove the set bolts, and pull off the clutch cover with the clutch disc.
NOTICE: Do not drop the clutch disc.

3. REMOVE RELEASE BEARING, FORK AND BOOT FROM TRANSMISSION

(a) Remove the clips, and pull off the bearing and hub.

(b) Remove the fork and boot.

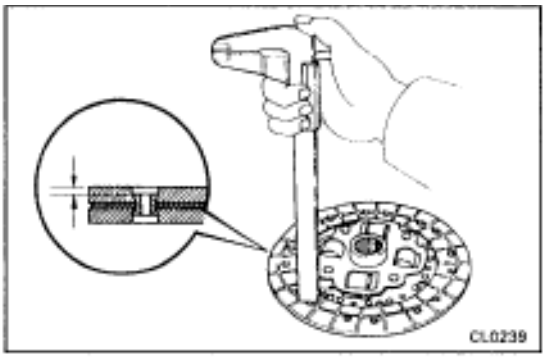

CLUTCH PARTS INSPECTION AND REPAIR

1. INSPECT CLUTCH DISC FOR WEAR OR DAMAGE
Using calipers, measure the rivet head depth.
Minimum rivet depth:
0.3 mm (0.012 in.)
If a problem is found, replace the clutch disc.

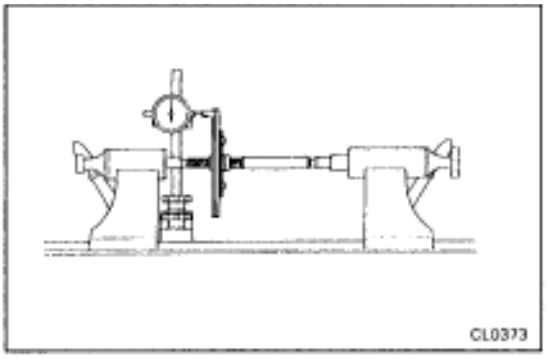

2. INSPECT CLUTCH DISC RUNOUT
Using a dial indicator, check the disc runout.
Maximum runout:
0.8 mm (0.031 in.)
If runout is excessive, replace the clutch disc.

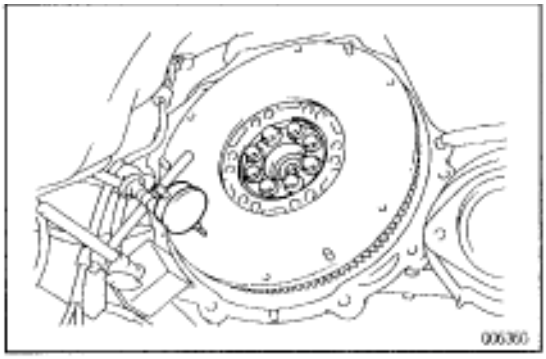

3. INSPECT FLYWHEEL RUNOUT
Using a dial indicator, check the flywheel runout.
Maximum runout:
0.1 mm (0.004 in.)
If runout excessive, replace the flywheel.

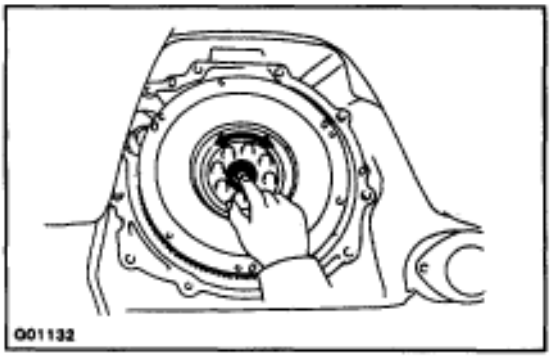

4. INSPECT PILOT BEARING

Turn the bearing by hand while applying force in the axial direction.

If the bearing sticks or has much resistance, replace the pilot bearing.

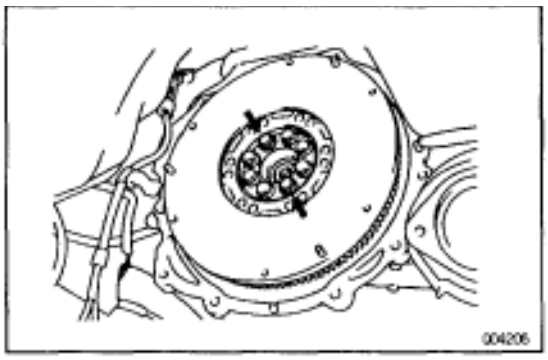

5. IF NECESSARY, REPLACE PILOT BEARING

(a) Remove the 2 bolts at diametrically opposite points.

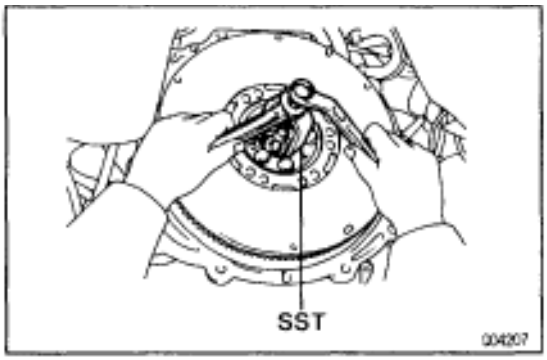

(b) Using SST, remove the pilot bearing.
SST 09303–35011

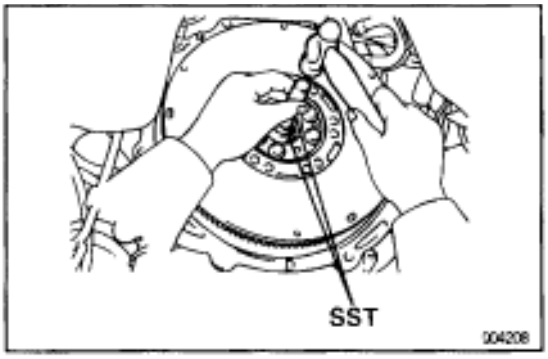

(c) Using SST and a hammer, drive in a new pilot bearing.
SST 09304–30012

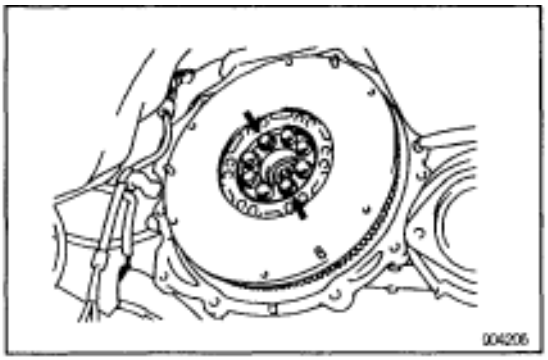

(d) Install 2 new bolts.

(e) First, torque the 2 bolts uniformly a little at a time.
Torque: 49 N·m (500 kgf·cm, 36 ft·lbf)

(f) Then tighten the 2 bolts an additional 80–100°.

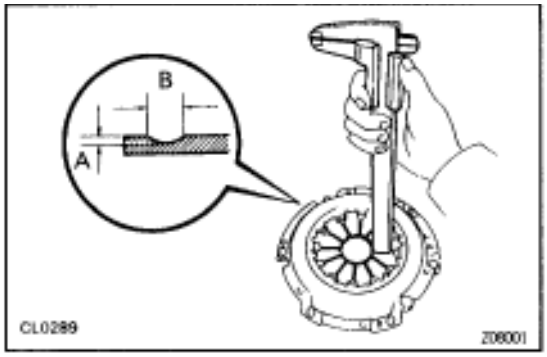

6. INSPECT DIAPHRAGM SPRING FOR WEAR

Using calipers, measure the diaphragm spring for depth and width of wear.

Maximum:

A: Depth 0.6 mm (0.024 in.)

B: Width 5.0 mm (0.197 in.)

If necessary, replace the clutch cover.

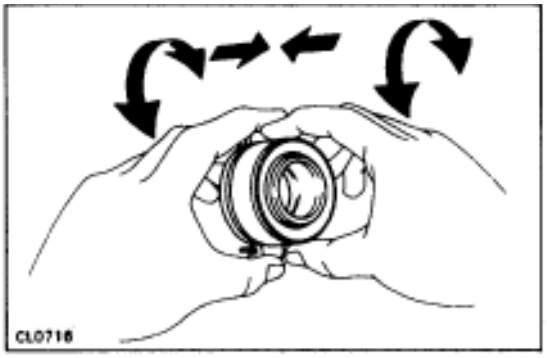

7. INSPECT RELEASE BEARING

Turn the bearing by hand while applying force in the axial direction.

HINT: The bearing is permanently lubricated and requires no cleaning or lubrication.

If a problem is found, replace the bearing together with the hub.

CLUTCH UNIT INSTALLATION

1. INSTALL CLUTCH DISC AND CLUTCH COVER ON FLYWHEEL

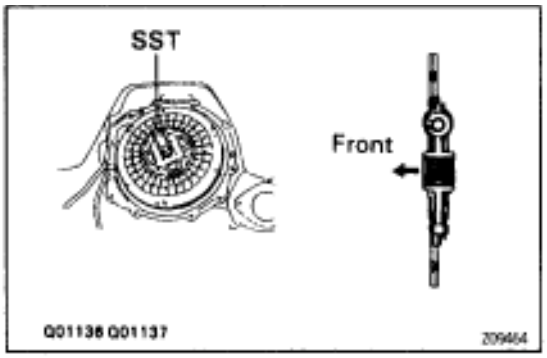

(a) Insert the SST in the clutch disc, and then set them and the cover in position.

SST 09301–00110

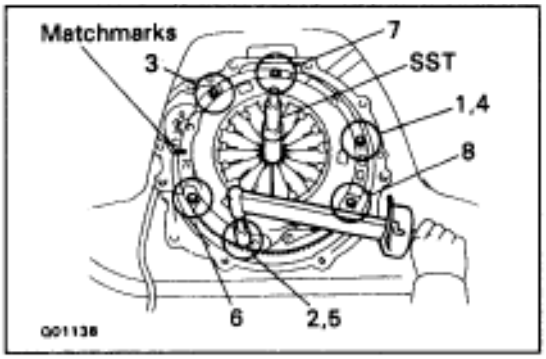

(b) Align the matchmarks on the clutch cover and fly–wheel.

(c) Tighten the bolts evenly and gradually while pushing SST. Make several passes around the cover until it is snug.

(d) Torque the bolts on the clutch cover in order shown.

Torque: 19 N·m (195 kgf·cm, 14 ft·lbf)

HINT: Temporarily tighten the No.1 and No.2 bolts.

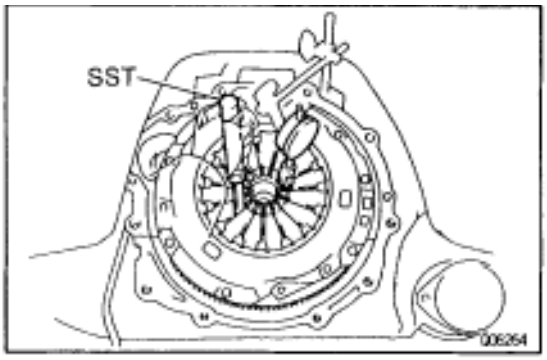

2. CHECK DIAPHRAGM SPRING TIP ALIGNMENT

Using a dial indicator with roller instrument, check the diaphragm spring tip alignment.

Maximum non–alignment:

0.5 mm (0.020 in.)

If alignment is not as specified, using SST adjust the diaphragm spring tip alignment.

SST 09333–00013

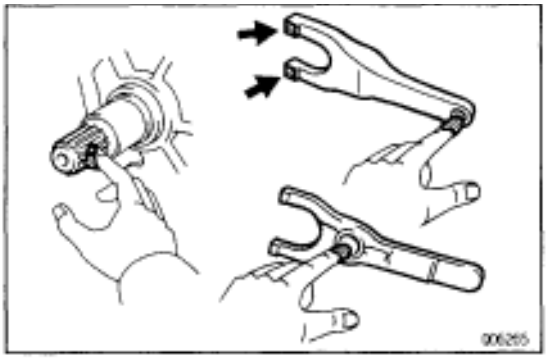

3. APPLY MOLYBDENUM DISULPHIDE LITHIUM BASE GREASE (NLGI NO.2)

(a) Apply release hub grease to these parts:
- Release fork and hub contact point
- Release fork and push rod contact point
- Release fork pivot point

(b) Apply clutch spline grease.
- Clutch disc spline

HINT: Recommended grease part number 08887–01706.

4. INSTALL RELEASE BEARING, FORK AND BOOT TO TRANSMISSION

(a) Install the bearing assembly to the fork, and then install them to the transmission.

(b) Install the boot.

5. INSTALL TRANSMISSION TO ENGINE
(See page MT1–8**)**

SERVICE SPECIFICATIONS

SERVICE DATA

Pedal height from asphalt sheet		146.2–156.2 mm (5.76–6.15 in.)
Pedal freeplay		5.0–15.0 mm (0.197–0.591 in.)
Push rod play at pedal top		1.0–5.0 mm (0.039–0.197 in.)
Full pedal stroke		132.0–138.0 mm (5.20–5.43 in.)
Clutch release point from pedal full stroke end position		25 mm (0.98 in.) or more
Disc rivet head depth	Maximum	0.3 mm (0.012 in.)
Disc runout	Maximum	0.8 mm (0.031 in.)
Diaphragm spring out non–alignment	Maximum	0.5 mm (0.020 in.)
Diaphragm spring finger wear	Depth Maximum	0.6 mm (0.024 in.)
Diaphragm spring finger wear	Width Maximum	5.0 mm (0.197 in.)
Flywheel runout	Maximum	0.1 mm (0.004 in.)
Flywheel damper rotational freeplay (2JZ–GTE)	Standard	105 mm (4.134 in.)

TORQUE SPECIFICATIONS

Part tightened	N·m	kgf·cm	ft·lbf
Clutch cover x Flywheel	19	195	14
Master cylinder set nut	12	125	9
Release cylinder set bolt	12	120	9
Clutch tube bracket (2JZ–GE)	4.9	50	43 in.·lbf
Clutch line union	15	155	11
Bleeder plug	11	110	8
Flywheel set bolt	49	500	36
Release fork support (2JZ–GTE)	25	260	18
Release fork support (2JZ–GE)	39	400	29
Clutch housing cover LH (2JZ–GTE)	12	120	9

FOREWORD

This repair manual has been prepared to provide information on the repair methods (including cutting and welding operations, but excluding painting) for collision–damaged body components of the TOYOTA SUPRA.

Applicable models: JZA80 series

This manual consists of body repair methods, exploded diagrams and illustrations of the body components and other information relating to body panel replacement such as handling precautions, etc. However, it should be noted that the front fenders of the TOYOTA models are bolted on and require no welding.

Body construction will sometimes differ depending on specifications and country of destination. Therefore, please keep in mind that the information contained herein is based on vehicles for general destinations.

For the repair procedures and specifications other than collisiondamaged body components of the TOYOTA SUPRA refer to the following repair manuals.

Manual Name	Pub. No.
(USA and CANADA)	
• SUPRA Repair Manual	M/Y Version
• Supra Electrical Wiring Diagram Manual	M/Y Version
• 1/2 SUPRA New Car Features (Models except USA and CANADA)	NCF096U
• SUPRA Chassis and Body Repair Manual	RM344E
• Supra Electrical Wiring Diagram Manual	EWD175Y
• SUPRA New Car Features (All Countries)	NCF097E
• Fundamental Painting Procedures	BRM024E
• Fundamental Body Repair Procedures	BRM002E

If you require the above manuals, please contact your TOYOTA Dealer.

All information contained in this manual is the most up–to–date at the time of publication. However, specifications and procedures are subject to change without prior notice.

TOYOTA MOTOR CORPORATION

HOW TO USE THIS MANUAL

Each repair method description provided in Section RE of this manual comprises two pages, divided into 2 blocks (REMOVAL AND INSTALLATION) and includes illustrations to facilitate body repair.

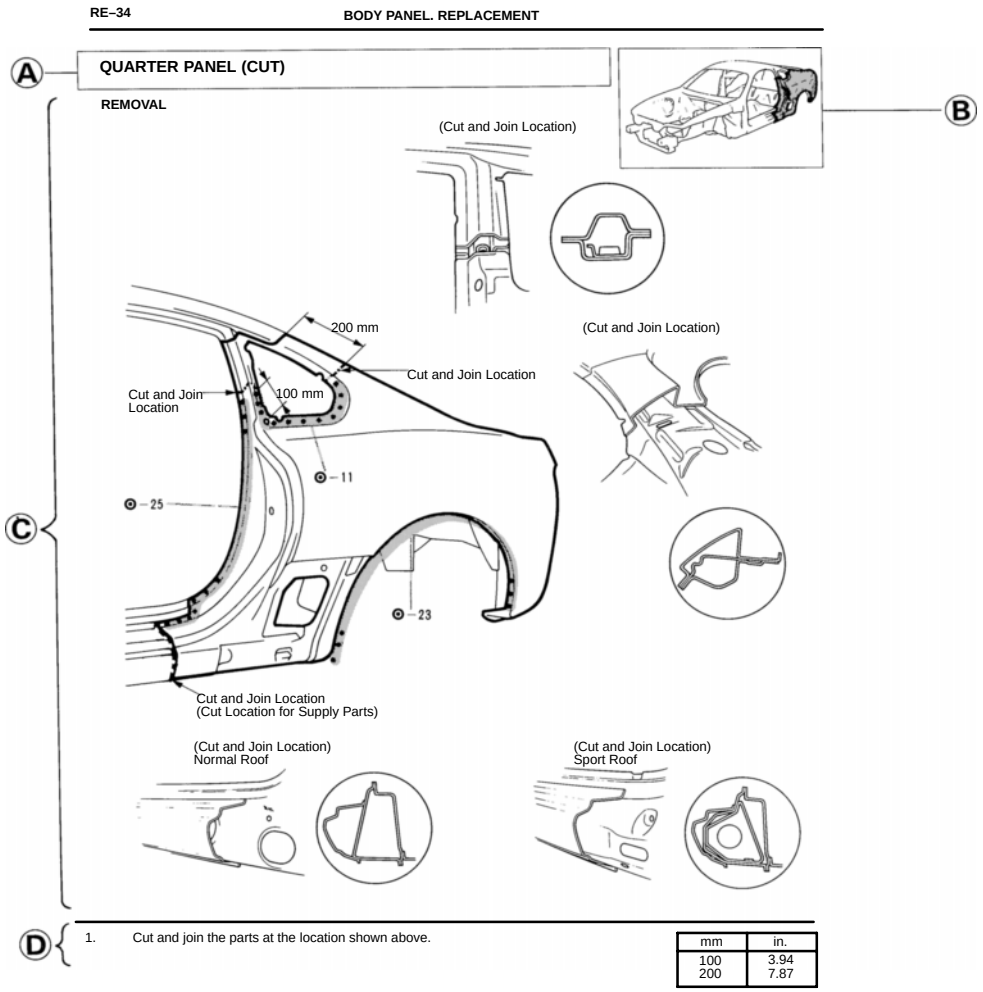

Ⓐ : REPLACEMENT PARTS AND METHOD

QUARTER PANEL (CUT)
- Replacement method
  - (ASSY) . . . . . Assembly replacement
  - (CUT) . . . . . Major cutting (less than 1/2 of parts used)
  - (CUT–H) . . . . Half cutting (about 1/2 of parts used)
  - (CUT–P) . . . . Partial cutting (most of parts used)
- Replacement parts

Ⓑ : PARTS LOCATION

Ⓒ : REMOVAL DIAGRAM
Describes in detail removal of the damaged parts involving repair by cutting.

Ⓓ : REMOVAL GUIDE
Provides additional information to more efficiently help you perform the removal.

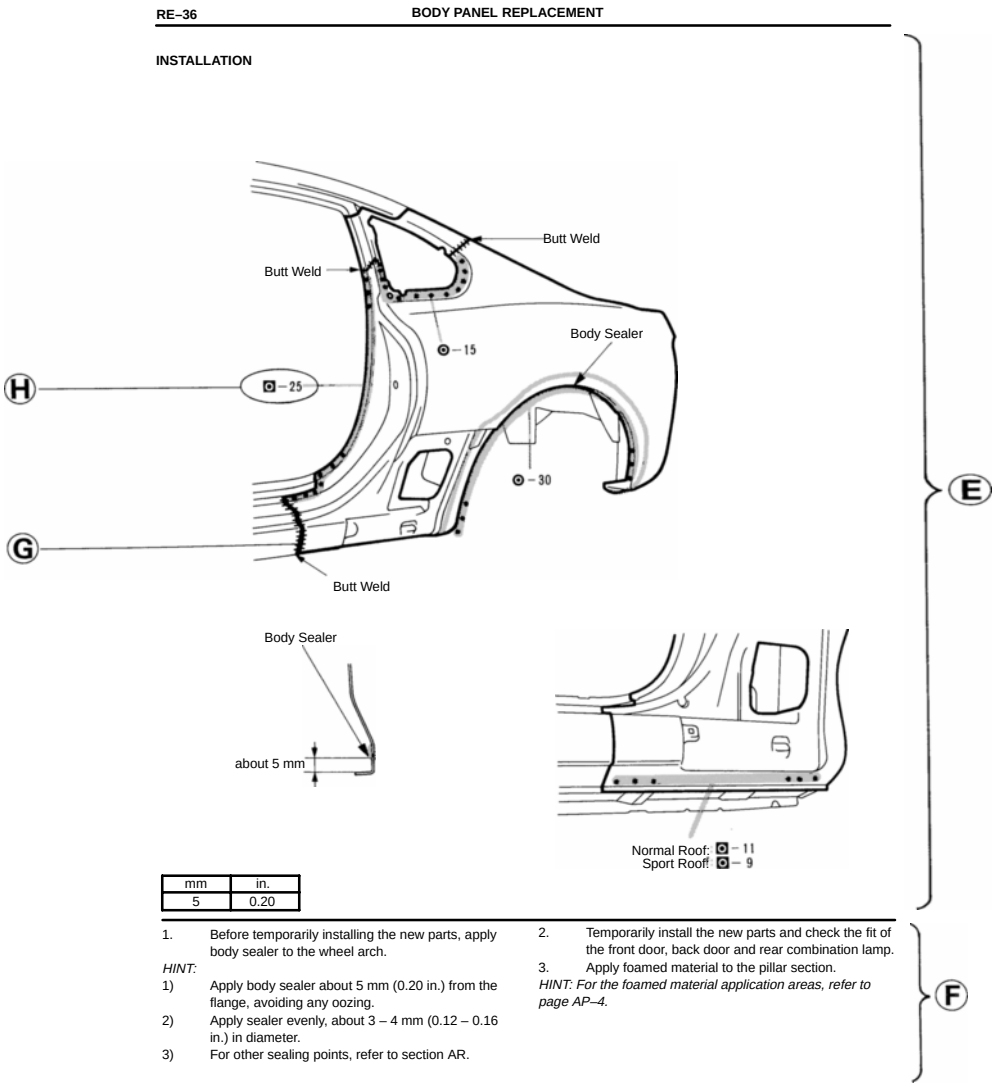

Ⓔ : **INSTALLATION DIAGRAM**
Describes in detail installation of the new parts involving repair by welding and/or cutting, but excluding painting.

Ⓕ : **INSTALLATION GUIDE**
Provides additional information to more efficiently help you perform the installation.

Ⓖ : **SYMBOLS**
See page IN–4.

Ⓗ : **ILLUSTRATION OF WELD POINTS**
Weld method and panel position symbols.
See page IN–5.

SYMBOLS

The following symbols are used in the welding Diagrams in Section RE of this manual to indicate cutting areas and the types of weld required.

SYMBOLS	MEANING	ILLUSTRATION
	SAW CUT OR ROUGH CUT	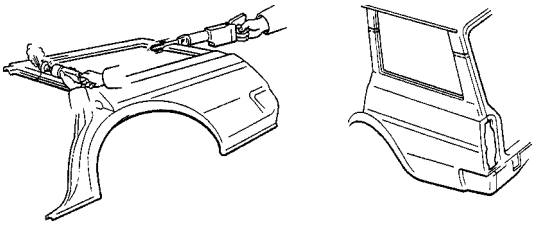
	REMOVE BRAZE	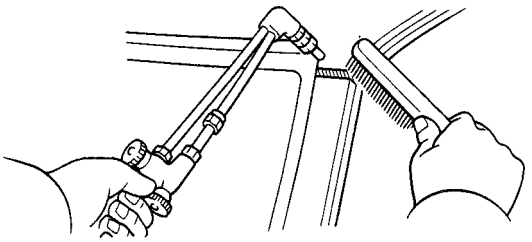
	WELD POINTS SPOT WELD OR MIG PLUG WELD (See page IN–5)	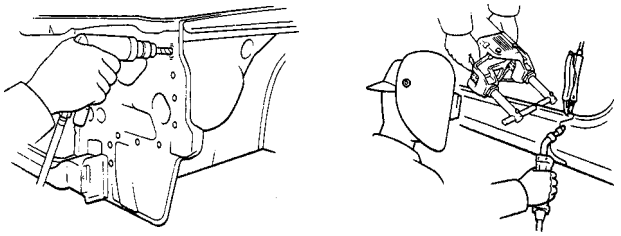
	CONTINUOUS MIG WELD (BUTT WELD OR TACK WELD)	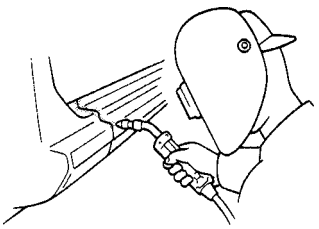
	BRAZE	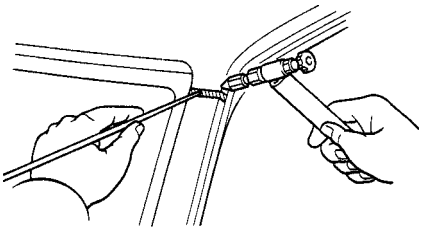
	BODY SEALER	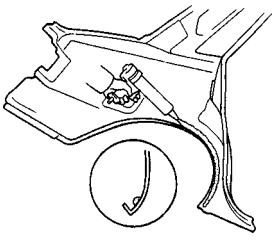

Illustration of Weld Point Symbols

EXAMPLE:

REMOVAL

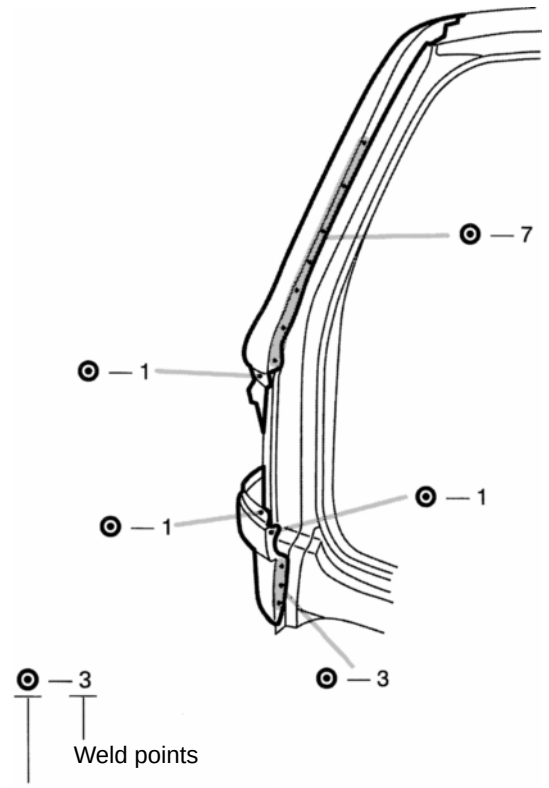

INSTALLATION

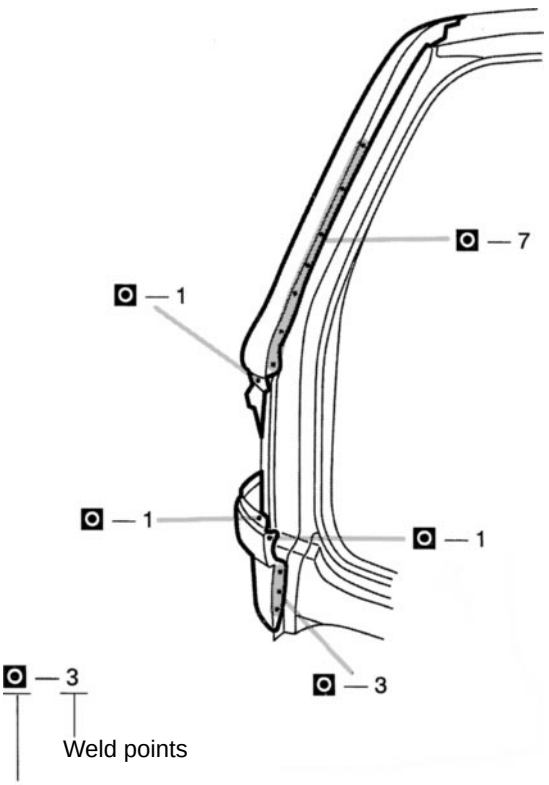

SYMBOL	MEANING	ILLUSTRATION
O M I	Remove Weld Points	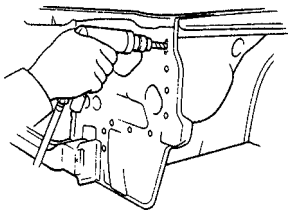
O	(Outside)	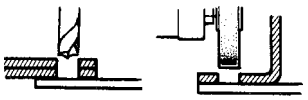
M	(Middle)	
I	(Inside)	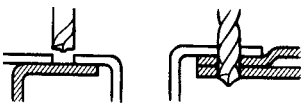
HINT: Panel position syrnbols are as seen from the working posture.		

SYMBOL	MEANING	ILLUSTRATION
O M I	Spot Weld	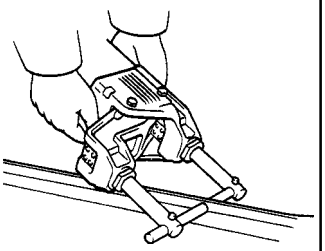
O M I	Mig Plug Weld	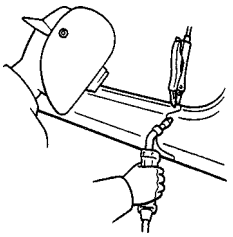
+	Spot MIG Weld	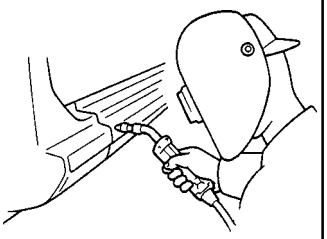

HANDLING PRECAUTIONS ON RELATED COMPONENTS

1. SUPPLEMENTAL RESTRAINT SYSTEM (SRS)

Locations of SRS Components

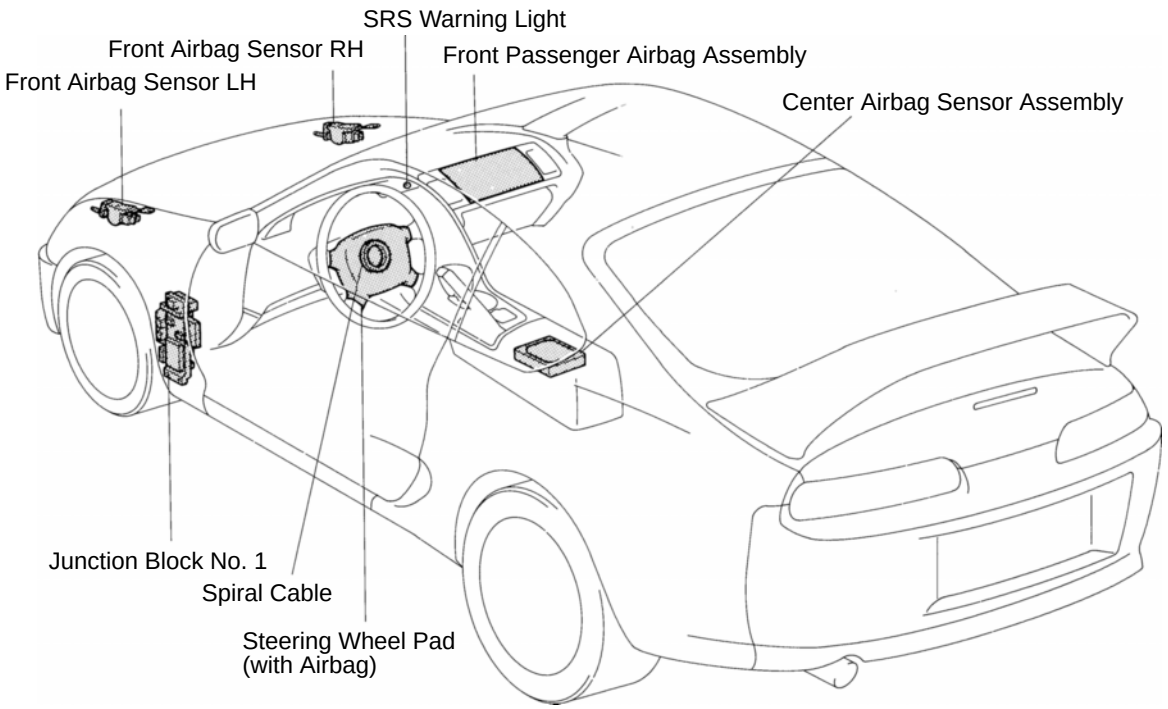

Servicing vehicle with a Supplemental Restraint System (referrerd to as the SRS in the remainder of this manual) installed.
When handling SRS components (removal, installation or inspection, etc.), always follow the directions given in the repair manual for the relevant model year to prevent the occurrence of accidents and airbag malfunction.
Also take the following precautions when repairing the body:

- Work must be started after 90 seconds or longer from the time the ignition switch is set to the LOCK position and the negative (–) terminal cable is disconnected from the battery.
  (The airbag system is equipped with a backup power source so that if work is started within 20 seconds of disconnecting the negative (–) terminal cable of the battery, the airbag may be deployed.)
  When the negative (–) terminal cable is disconnected from the battery, memory of the clock and audio systems will be cancelled. So before starting work, make a record of the contents memorized by each memory system. Then when work is finished, reset the clock and audio systems as before.
  When the vehicle has tilt and telescopic steering, power seat, outside rear view mirror and power shoulder belt anchorage, which are all equipped with memory function, it is not possible to make a record of the memory contents. So when the operation is finished, it will be necessary to explain this fact to the customer, and request the customer to adjust the features and reset the memory.
- When using electric welding, first disconnect the SRS connector (yellow color and 2 pins) under the steering column near the combination switch connector on the glove compartment finish plate and lower the front scuff plate before starting work.

- Before repairing the body, remove the SRS parts if, during repair, shocks are likely to be applied to the sensors due to vibrations of the body or direct tapping with tools or other parts.
- Do not expose the SRS parts directly to hot air or flames.
  NOTICE:
  1) *The maximum ambient temperature tolerance is 120˚C (248˚F) for the front airbag sensor, 105˚C (221˚F) for the center airbag sensor assembly and 93˚C (200˚F) for the steering wheel pad, and front passenger airbag assembly. If it is possible that the ambient temperature may reach or exceed the temperature limit, remove the sensors and the steering wheel pad from the vihicle or protect them with a hot insulation material before starting work.*
  2) *Prior to welding, remove adjacent SRS parts from the vehicle or protect there with fire–proof covers.*
- If the front fender or periphery of the vehicle is damaged, visually inspect for damage to the front airbag sensor using the inspection procedures described in section RS of the repair manual for the relevant model year.
  Also check that the dimensions of the body where the front airbag sensor is installed match those in the body dimension drawings.
  (The airbag may malfunction, or may not work, if the mounting angle or dimensions of the sensor mount are not correct.)

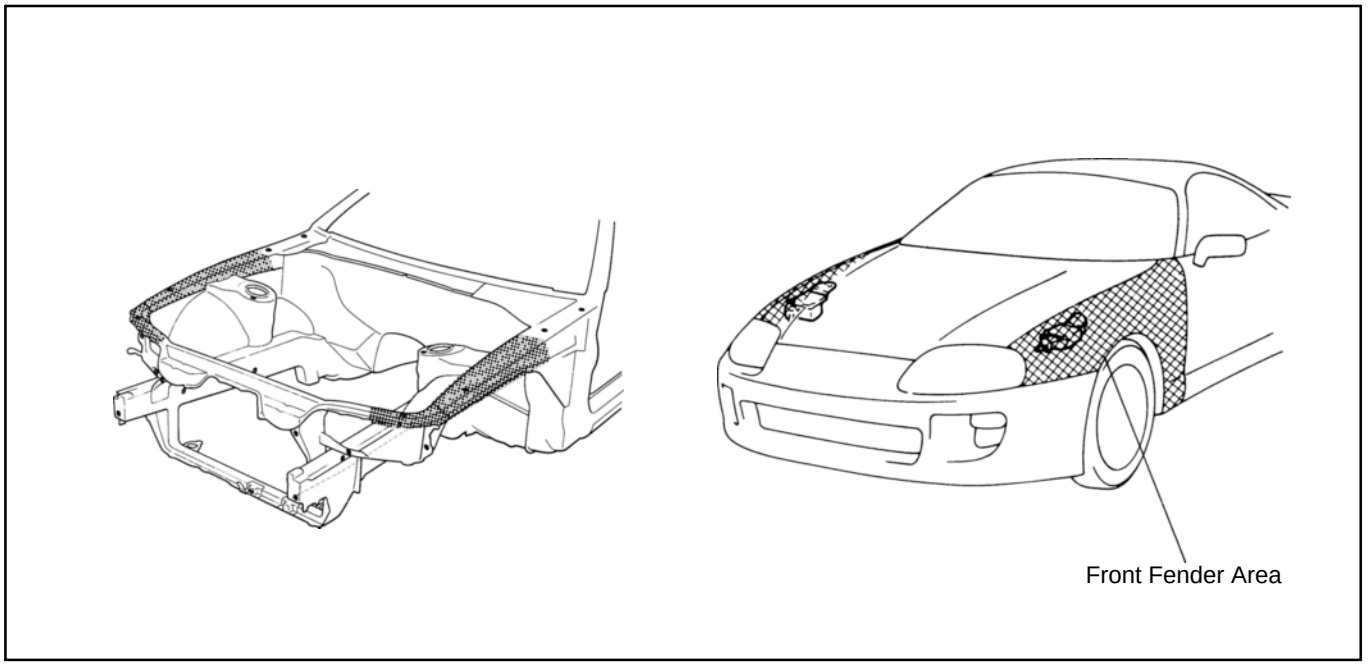

- If the vehicle is damaged, visually inspect for damage to the steering wheel pad using the inspection procedures described in section RS of the repair manual for the relevant model year.
- When removing or handling the steering wheel pad, and front passenger airbag assembly keep the pad upper surface facing upward. Also, lock the lock lever of the twin lock type connector at the rear of the pad and take care not to damage the connector.
  (Storing the pad or front passenger airbag assembly with its metalic surface up may lead to a serious accident if the airbag inflates for some reason.)
- Store the steering wheel pad and the front passenger airbag assembly where the ambient temperature remains below 93˚C (200˚F), without high humidity and away from electrical noise.
- Be careful not to let painting materials contact the SRS parts.
- Information labels are attached to the periphery of the SRS components. Follow the NOTICES.
- Store the airbag assembly where the ambient temperature remains below 93˚C (200˚F), without high humidity and away from electrical noise.

2. BRAKE SYSTEM

The brake system is one of the most important safety components. Always follow the directions and notes given in section BR of the repair manual for the relevant model year when handling brake system parts.
NOTICE: When repairing the brake master cylinder or TRAC system, bleed the air out of the TRAC system.

3. DRIVE TRAIN AND CHASSIS

The drive train and chassis are components–that can have great effects on the running performance and vibration resistance of the vehicle. After installing components in the sections listed in the table below, perform alignments to ensure correct mounting angles and dimensions. Particularly accurate repair of the body must also be done to ensure correct alignment.
HINT: Correct procedures and special tools are required for alignment. Always follow the directions given in the repair manual for the relevant model year during alignment and section DI of this manual.

Component to be aligned	Section of repair manual for relevant model year
Front Wheels	Suspension and Axle (SA) section
Rear Wheels	Suspension and Axle (SA) section
Propeller Shaft	Propeller Shaft (PR) section

4. ECU (ELECTRONIC CONTROL UNIT)

Locations of ECUs

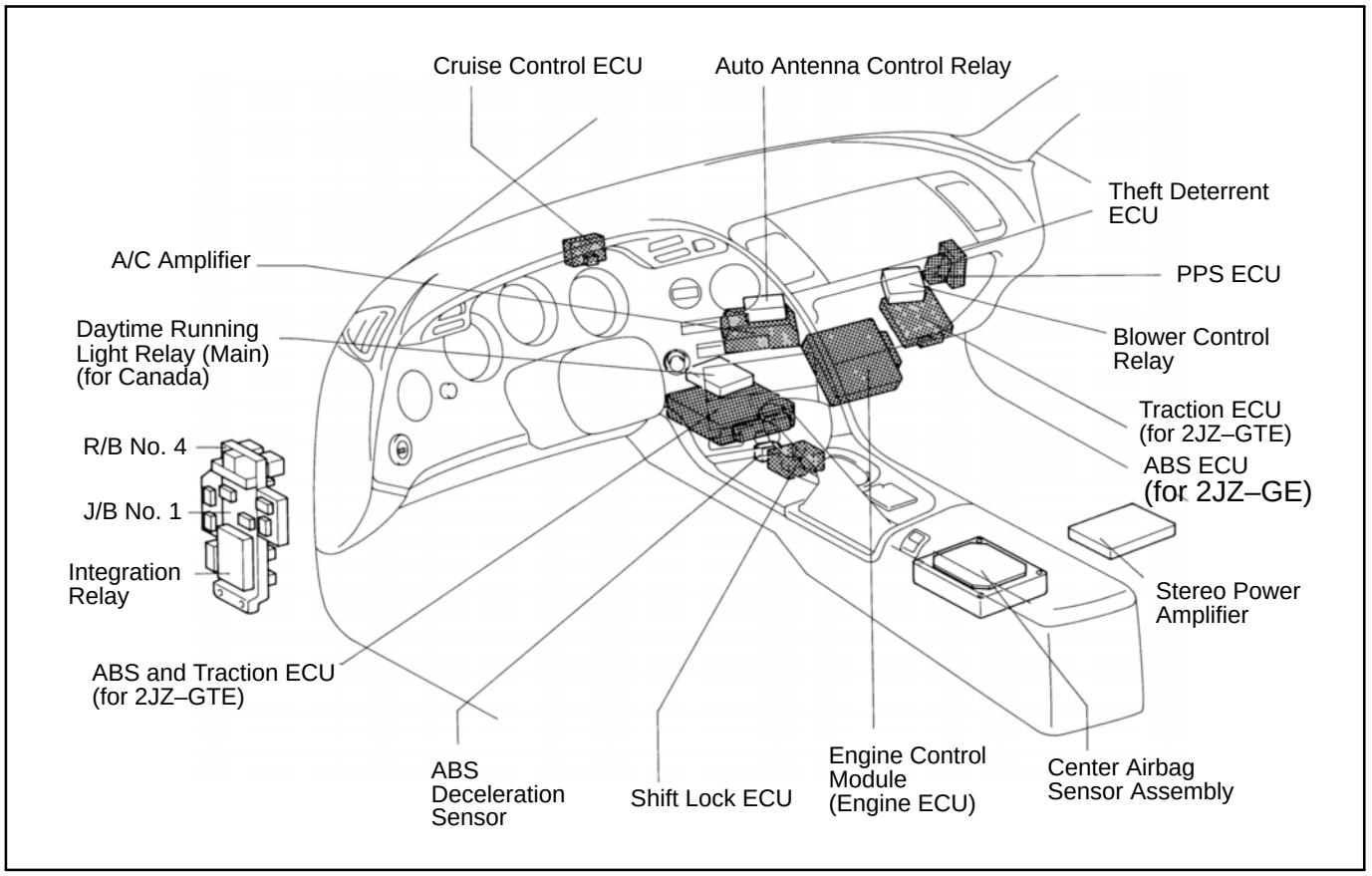

Locations of ECUs (Cont'd)

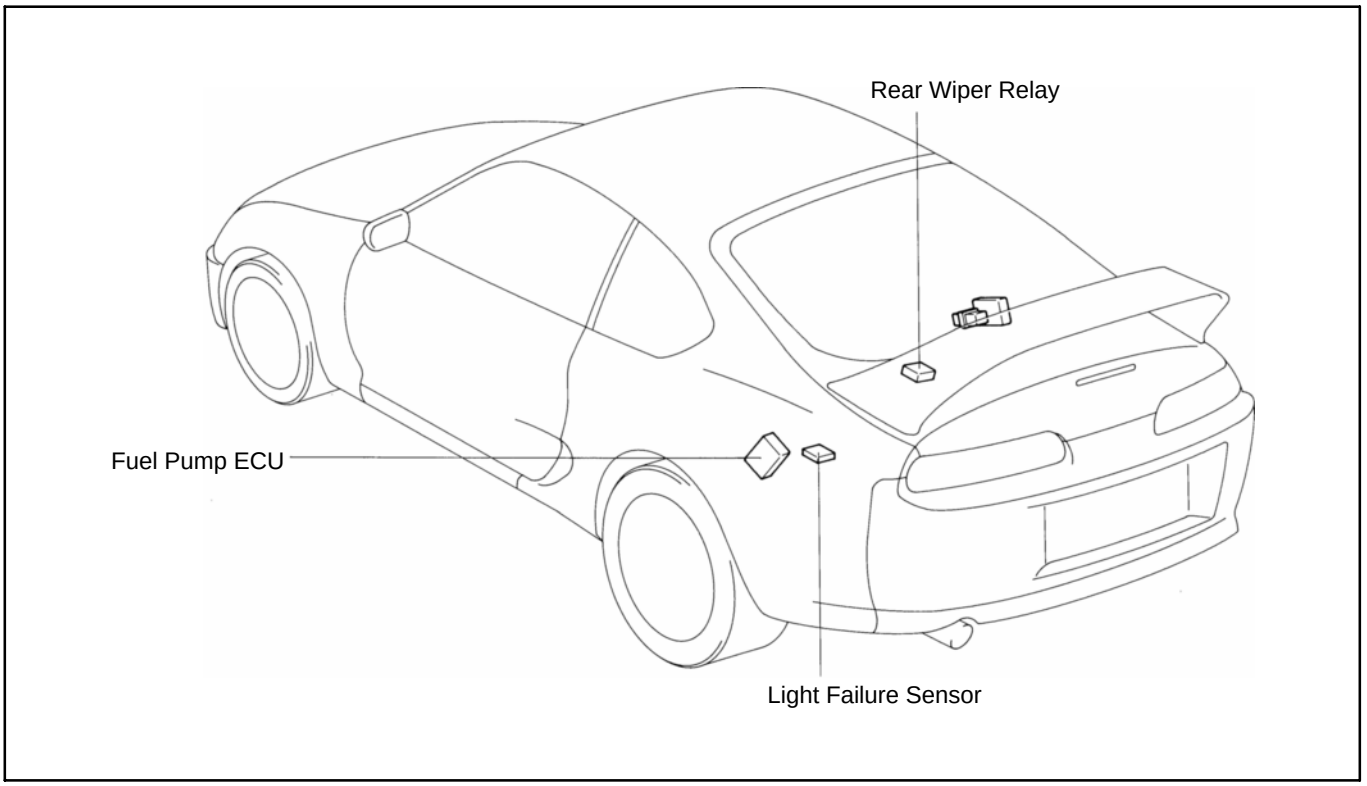

Many ECUs are mounted in this vehicle.
Take the following precautions during body repair to prevent damage to the ECUs.

- Before starting electric welding operations, disconnect the negative (–) terminal cable from the battery. When the negative (–) terminal cable is disconnected from the battery, memory of the clock and audio systems will be cancelled. So before starting work, make a record of the contents memorized by each memory system. Then when work is finished, reset the clock and audio systems as before.
  When the vehicle has tilt and telescopic steering, power seat and outside rear view mirror, which are all equipped with memory function, it is not possible to make a record of the memory contents.
  So when the operation is finished, it will be necessary to explain this fact to the customer, and request the customer to adjust the features and reset the memory.
- Do not expose the ECUs to ambient temperatures above 80˚C (176˚F).
  NOTICE: if it is possible the ambient temperature may reach 80˚C (176˚F) or more, remove the ECUs from the vehicle before starting work.
- Be careful not to drop the ECUs and not to apply physical shocks to them.

5. COMPONENTS ADJACENT TO THE BODY PANELS

Various types of component parts are mounted directly on or adjacently to the body panels.
Strictly observe the following precautions to prevent damaging these components and the body panels during handling.

- Before repairing the body panels, remove their components or apply protective covers over the components.
- Before prying components off using screwdriver or a scraper, etc., attach protective tape to the tool tip or blade to prevent damaging the components an the body paint.
- Before removing components from the outer surface of the body, attach protective tape to the body to ensure no damage to painted areas.
  HINT: Apply touch–up paint to any damaged paint surfaces.
- Before drilling or cutting sections, make sure that there are no wires, etc. on the reverse side.

GENERAL REPAIR INSTRUCTIONS

Work Precautions

SAFETY
Never stand in direct line with the chain when using a puller on the body or frame, and be sure to attach a safety cable.

VEHICLE PROTECTION
When welding, protect the painted surfaces, windows, seats an carpet with heat–resistant, fire–proof covers.

SAFETY
1. Before performing repair work, check for fuel leaks. If a leak is found, be sure to close the opening totally.
2. If it is necessary to use a frame in the area of the–fuel tank, first remove the tank and plug the fuel line.



WRONG

WRONG

SAFETY WORK CLOTHES
In addition to the usual mechanic's wear, cap and safety shoes, the appropriate gloves, head protector, glasses, ear plugs, face protector, dust–prevention mask, etc. should be worn as the situation demands.

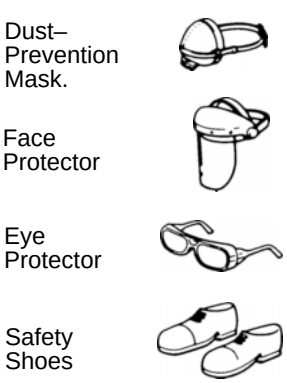

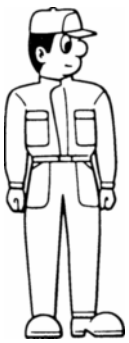

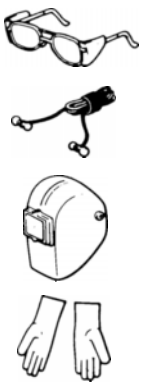

HAND TOOLS
keeping your hand tools in neat order improve your work efficiency.

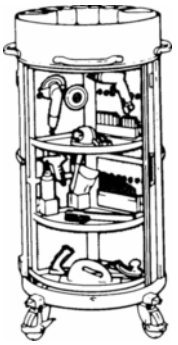

Proper and Efficient Work Procedures

REMOVAL

PRE–REMOVAL MEASURING
Before removal or cutting operations, take measurements in accordance with the dimension diagram. Always use a puller to straighten a damaged body or frame.

NUMBER OF SPOT WELDS AND PANEL POSITIONS
The number of spot welds and the panel positions to be removed are shown for your reference.
HINT: See "Symbols" on page IN–4, 5.

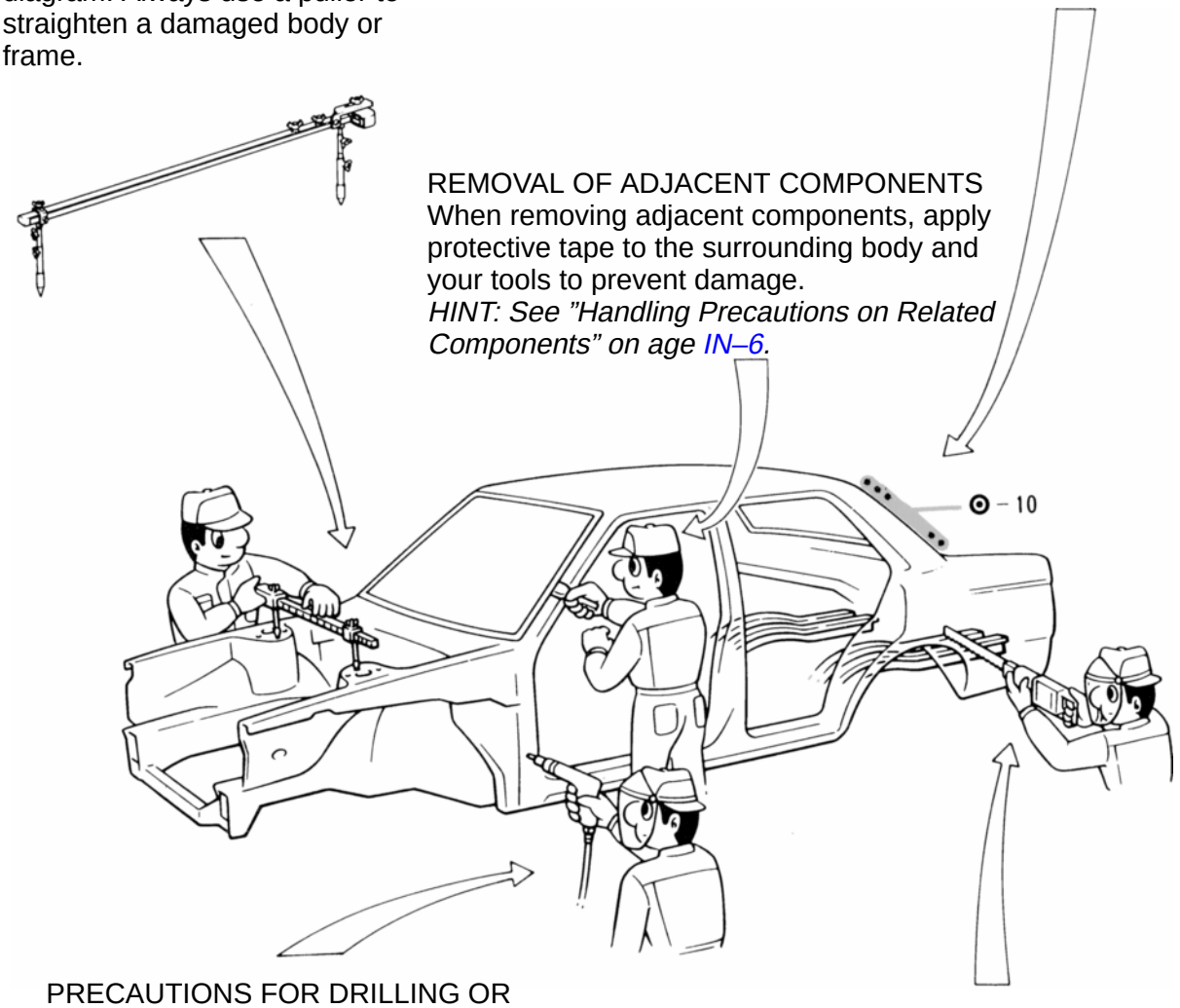

REMOVAL OF ADJACENT COMPONENTS
When removing adjacent components, apply protective tape to the surrounding body and your tools to prevent damage.
HINT: See "Handling Precautions on Related Components" on age IN–6.

PRECAUTIONS FOR DRILLING OR CUTTING
Check behind any area to be drilled or cut to insure that there are no hoses, wires, etc., that may be damaged.
HINT: See "Handling Precautions on Related Components" on page IN–6.

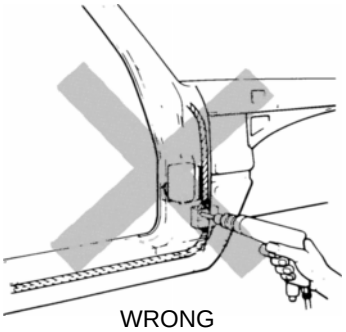
WRONG

CUTTING AREA
Always cut in a straight line and avoid reinforced area.

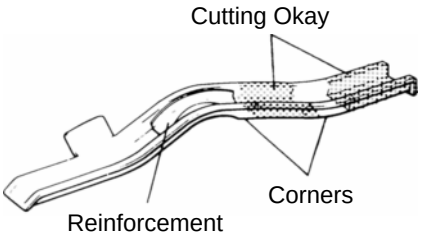

PREPARATION FOR INSTALLATION

SPOT WELD POINTS

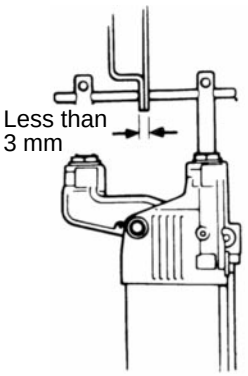

When welding panels with a combined thickness of over 3 mm (0.12 in.), use a MIG (Metal Inert Gas) welder for plug welding.
HINT: spot welding will not provide sufficient durability for panels over 3 mm (0.12 in.) thick.

APPLICATION OF WELD–THROUGH PRIMER (SPOT SEALER)

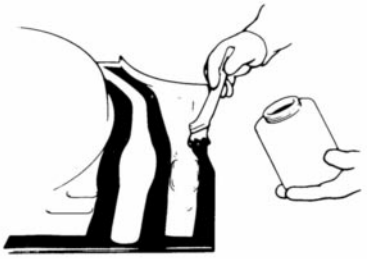

Remove the paint from the portion of the new parts and body to be welded, and apply weld–through primer.
HINT: See "ANTI–RUST TREATMENT" on page AR–2.



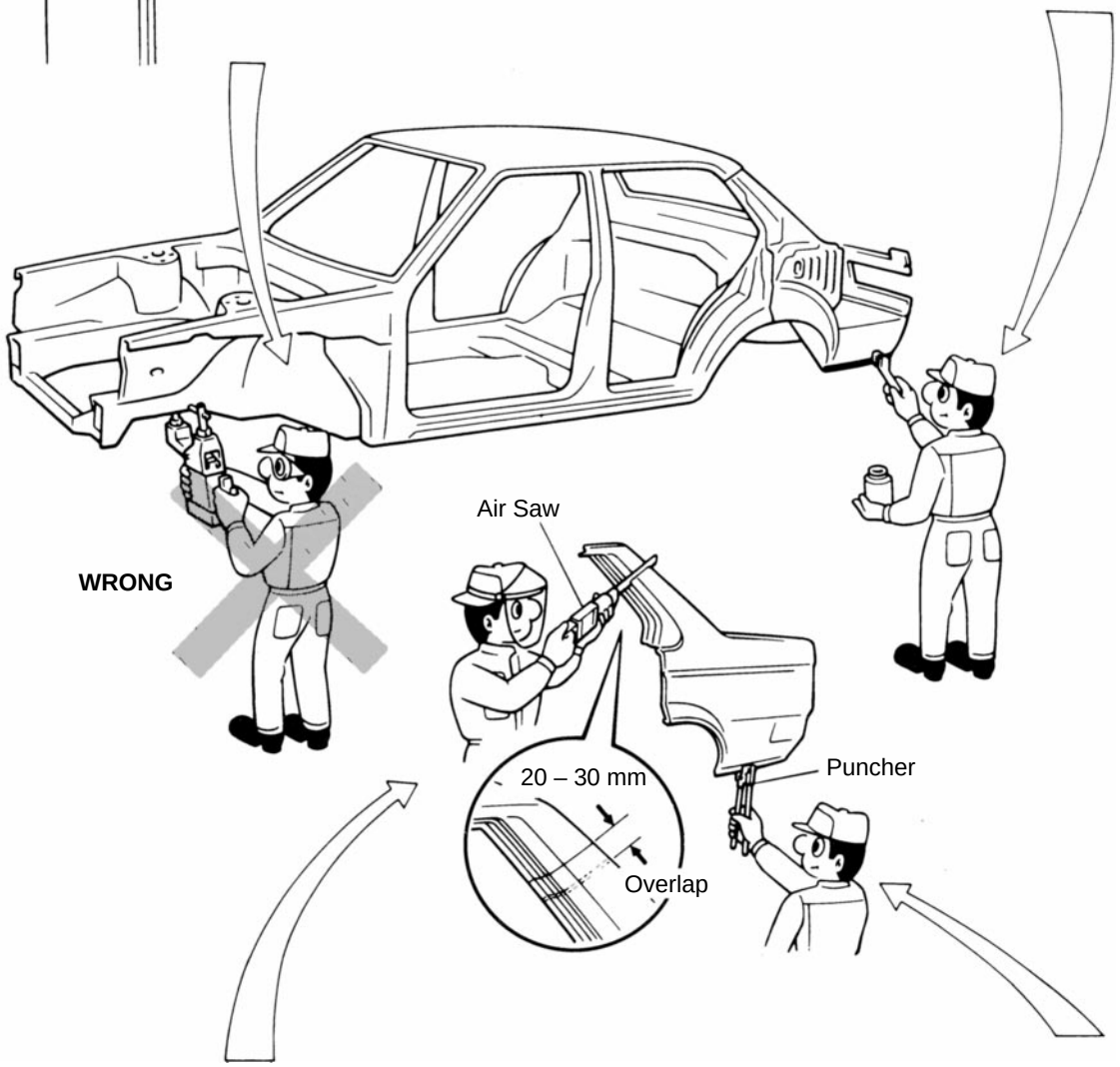

ROUGH CUTTING OF JOINTS
For joint areas, rough cut the new parts, leaving 20 – 30 mm (0.79 – 1.18 in.) overlap.

MAKING HOLES FOR PLUG WELDING
For areas where a spot welder cannot be used, use a puncher or drill to make holes for plug welding.

REFERENCE: mm (in.)

Thickness of welded portion	Size of plug hole
1.0 (0.04) under	5 (0.20) ϕ over
1.0 (0.04) – 1.5 (0.06)	6.5 (0.26) ϕ over
1.5 (0.06) over	8 (0.31) ϕ over

INSTALLATION

PRE–WELDING MEASUREMENTS
Always take measurements before installing underbody or engine components to insure correct assembly. After installation, confirm proper fit.

WELDING PRECAUTIONS

1. The number of welding spots should be as follows.
   Spot weld: 1.3 x No. of manufacturer's spots.
   Plug weld: More than No. of manufacturer's plugs.

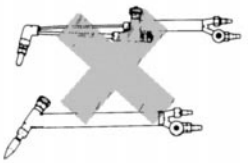

WRONG

2. Plug welding should be done with a MIG (Metal Inert Gas) welder. Do not gas weld or braze panels at areas other than specified.

POST–WELDLNG REFINISHING

1. Always check the welded spots to insure they are secure.
2. When smoothing out the weld spots with a disc grinder, be careful not to grind off too much as this–would weaken the weld.

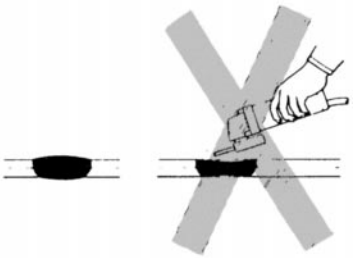

OKAY **WRONG**

SPOT WELD LOCATIONS
Try to avoid welding over previous spots.

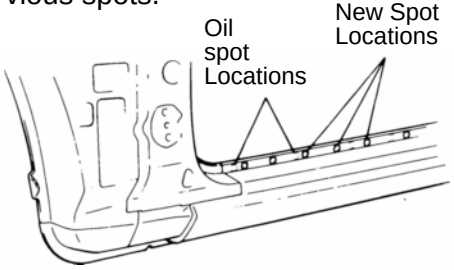

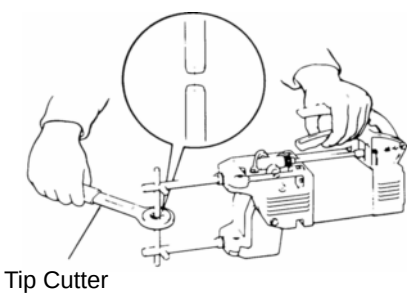

SPOT WELDING PRECAUTIONS

1. The shape of the welding tip point has an effect on the strength of the weld.
2. Always insure that the seams and welding tip are free of paint.

ANTI–RUST TREATMENT

When replacing body panels, always apply body sealer, anti–rust agent or undercoat according to the requirements of your country.
HINT: For further details, see the description given in section AR of this manual.

BODY SEALER
Apply body sealer to the required areas.



Cartridge Type



Tube Type

ANTI–RUST AGENT (WAX)
Apply anti–rust agent to following sections.

- Inside of the hems of the doors and hood.
- Around the hinges of the doors and hood.
- Inside of the welded parts with boxed cross–section.

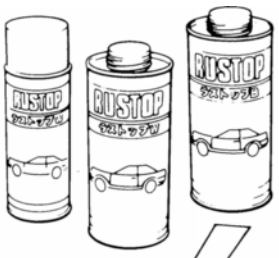

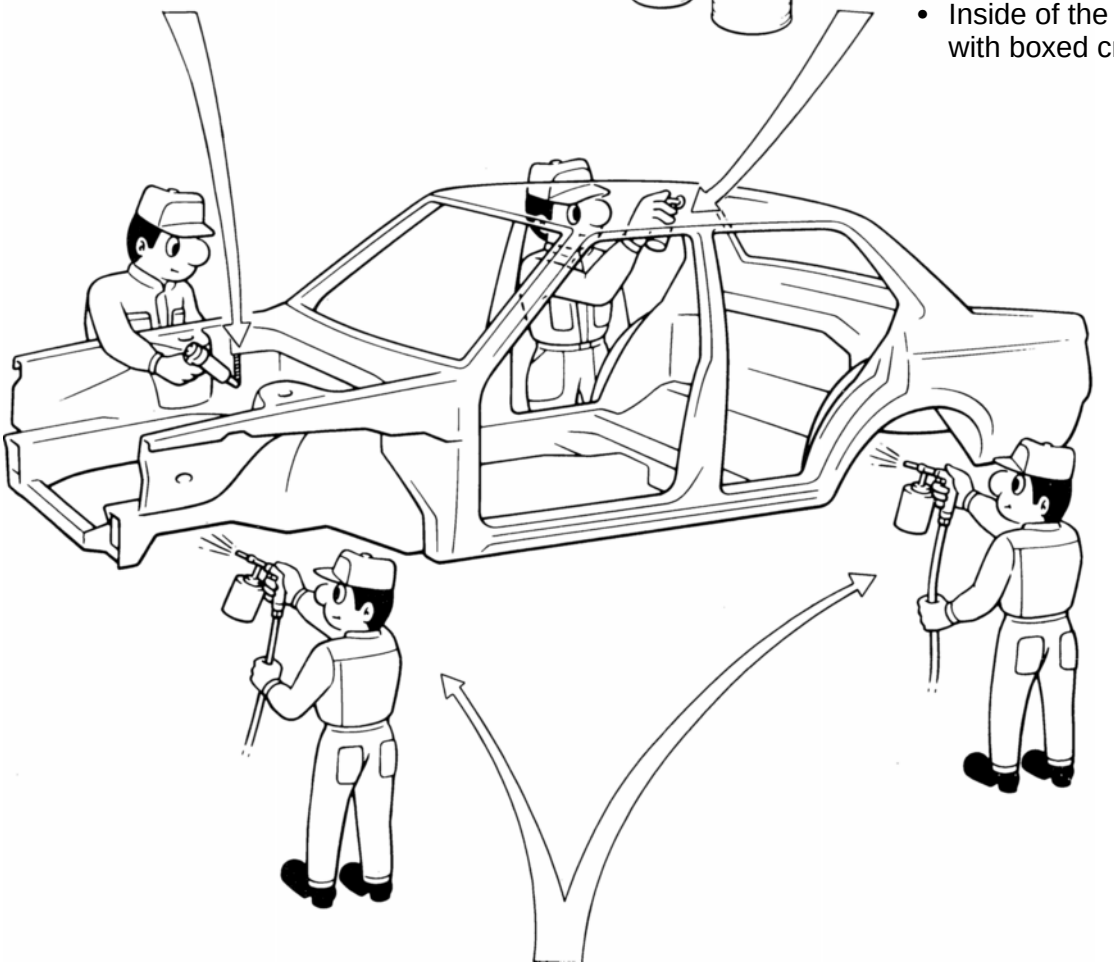



Undercoating (Oil base)



Undercoating (Water base)

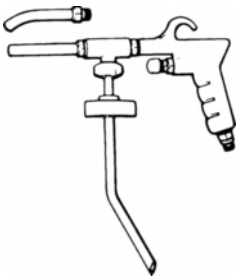

spray Gun

UNDERCOAT
Apply undercoat to the underbody and wheel housings.

VEHICLE LIFT AND SUPPORT LOCATIONS

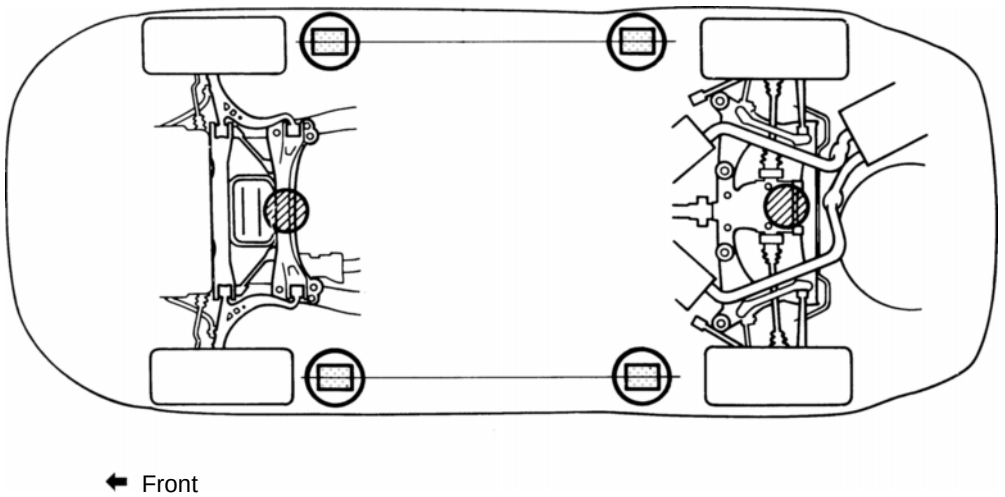

⬅ Front

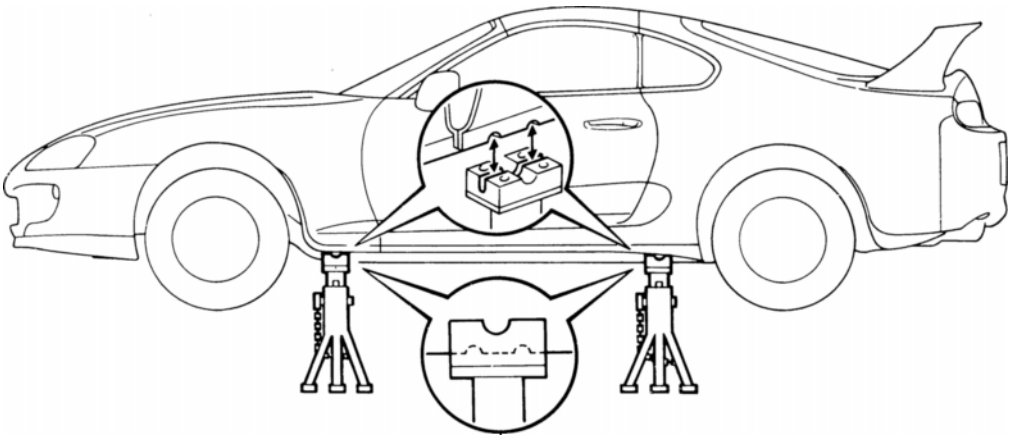

JACK POSITION

Front . . . . . Front crossmember
Rear . . . . . Rear axle beam
CAUTION: Before jacking–up the rear and front, make sure the car is not carrying any extra weight.

PANTOGRAPH JACK POSITION

SUPPORT POSITION

Safety stand and swing arm type lift . . . . . .

ABBREVIATIONS USED IN THIS MANUAL

For convenience, the following abbreviations are used in this manual.

ABS	Antilock Brake System
A/C	Air Conditioner
assy	assembly
ECT	Electronic Controlled Transmission
ECU	Electronic Control Unit
e.g.	Exempli Gratia (for Example)
Ex.	Except
FWD	Front Wheel Drive Vehicles
4WD	Four Wheel Drive Vehicles
in.	inch
LH	Left–hand
LHD	Left–hand Drive
MIG	Metal Inert Gas
M/Y	Model Year
PPS	Progressive Power Steering
RH	Right–hand
RHD	Right–hand Drive
SRS	Supplemental Restraint System
w/	with
w/o	without

HANDLING PRECAUTIONS

1. The repair procedure for plastic body parts must conform with the type of plastic material.
2. Plastic body parts are identified by the codes in the following chart.
3. When repairing metal body parts adjoining plastic body parts (by brazing, frame cutting, welding, painting etc.), consideration must given to the property of the plastic.

Code	Material name	Heat* resistant temperature limit °C (°F)	Resistance to alcohol or gasoline	Notes
AAS	Acrylonitrile Acrylic Styrene	80 (176)	Alcohol is harmless if applied only for short time in small amounts (e.g., quick wiping to remove grease).	Avoid gasoline and organic or aromatic solvents.
ABS	Acrylonitrile Butadiene Styrene	80 (176)	Alcohol is harmless if applied only for short time in small amounts (e.g., quick wiping to remove grease).	Avoid gasoline and organic or aromatic solvents.
AES	Acrylonitrile Ethylene Styrene	80 (176)	Alcohol is harmless if applied only for short time in small amounts (e.g., quick wiping to remove grease).	Avoid gasoline and organic or aromatic solvents.
BMC	Bulk Moulding Compound	150 (302)	Alcohol and gasoline are harmless.	Most solvents are harmless.
CAB	Cellulose Acetate	80 (176)	Alcohol is harmless if applied only for short time in small amounts (e.g., quick wiping to remove grease).	Avoid gasoline and organic or aromatic solvents.
EPDM	Ethylene Propylene	100 (212)	Alcohol is harmless. Gasoline is harmless if applied only for short time in small amounts.	Most solvents are harmless but avoid dipping in gasoline, solvents, etc.
PA	Polyamide (Nylon)	80 (176)	Alcohol and gasoline are harmless.	Avoid battery acid.
PBT	Polybutylene Terephthalate	160 (320)	Alcohol and gasoline are harmless.	Most solvents are harmless.
PC	Polycarbonate	120 (248)	Alcohol is harmless.	Avoid gasoline, brake fluid, wax, wax removers and organic solvents. Avoid alkali.
PE	Polyethylene	80 (176)	Alcohol and gasoline are harmless.	Most solvents are harmless.
PET	Polyethylene Terephthalate	75 (176)	Alcohol and gasoline are harmless.	Avoid dipping in water.

* Temperatures higher than those listed here may result in material deformation during repair.

Code	Material name	Heat* resistant temperature limit °C (°F)	Resistance to alcohol or gasoline	Notes
PMMA	Polymethyl Methacrylate	80 (176)	Alcohol is harmless if applied only for short time in small amounts.	Avoid dipping or immersing in alcohol, gasoline, solvents, etc.
POM	Polyoxymethylene (Polyacetal)	100 (212)	Alcohol and gasoline are harmless.	Most solvents are harmless.
PP	Polypropylene	80 (176)	Alcohol and gasoline are harmless.	Most solvents are harmless.
PPO	Modified Polyphenylene Oxide	100 (212)	Alcohol is harmless.	Gasoline is harmless if applied only for quick wiping to remove grease.
PS	Polystyrene	60 (140)	Alcohol and gasoline are harmless if applied only for short time in small amounts.	Avoid dipping or immersing in alcohol, gasoline, solvents, etc.
PUR	Polyurethane	80 (176)	Alcohol is harmless if applied only for very short time in small amounts (e.g., quick wiping to remove grease).	Avoid dipping or immersing in alcohol, gasoline, solvents, etc.
PVC	Polyvinylchloride (Vinyl)	80 (176)	Alcohol and gasoline are harmless if applied only for short time in small amounts (e.g., quick wiping to remove grease).	Avoid dipping or immersing in alcohol, gasoline, solvents, etc.
SAN	Styrene Acrylonitrile	80 (176)	Alcohol is harmless if applied only for short time in small amounts (e.g., quick wiping to remove grease).	Avoid dipping or immersing in alcohol, gasoline, solvents, etc.
SMC	Sheet Moulding Compound	180 (356)	Alcohol and gasoline are harmless.	Avoid alkali.
TPO	Thermoplastic Olefine	80 (176)	Alcohol is harmless. Gasoline is harmless if applied only for short tune in small amounts.	Most solvents are harmless but avoid dipping in gasoline, solvents, etc.
TPU	Thermoplastic Polyurethane	80 (176)	Alcohol is harmless if applied only for very short time in small amounts (e.g., quick wiping to remove grease).	Avoid dipping or immersing in alcohol, gasoline, solvents, etc.
TSOP	TOYOTA Supper Olefine Polymer	80 (176)	Alcohol and gasoline are harmless.	Most solvents are harmless.
UP	Unsaturated Polyester	110 (233)	Alcohol and gasoline are harmless.	Avoid alkali.

* Temperatures higher than those listed here may result in material deformation during repair.

LOCATION OF PLASTIC BODY PARTS

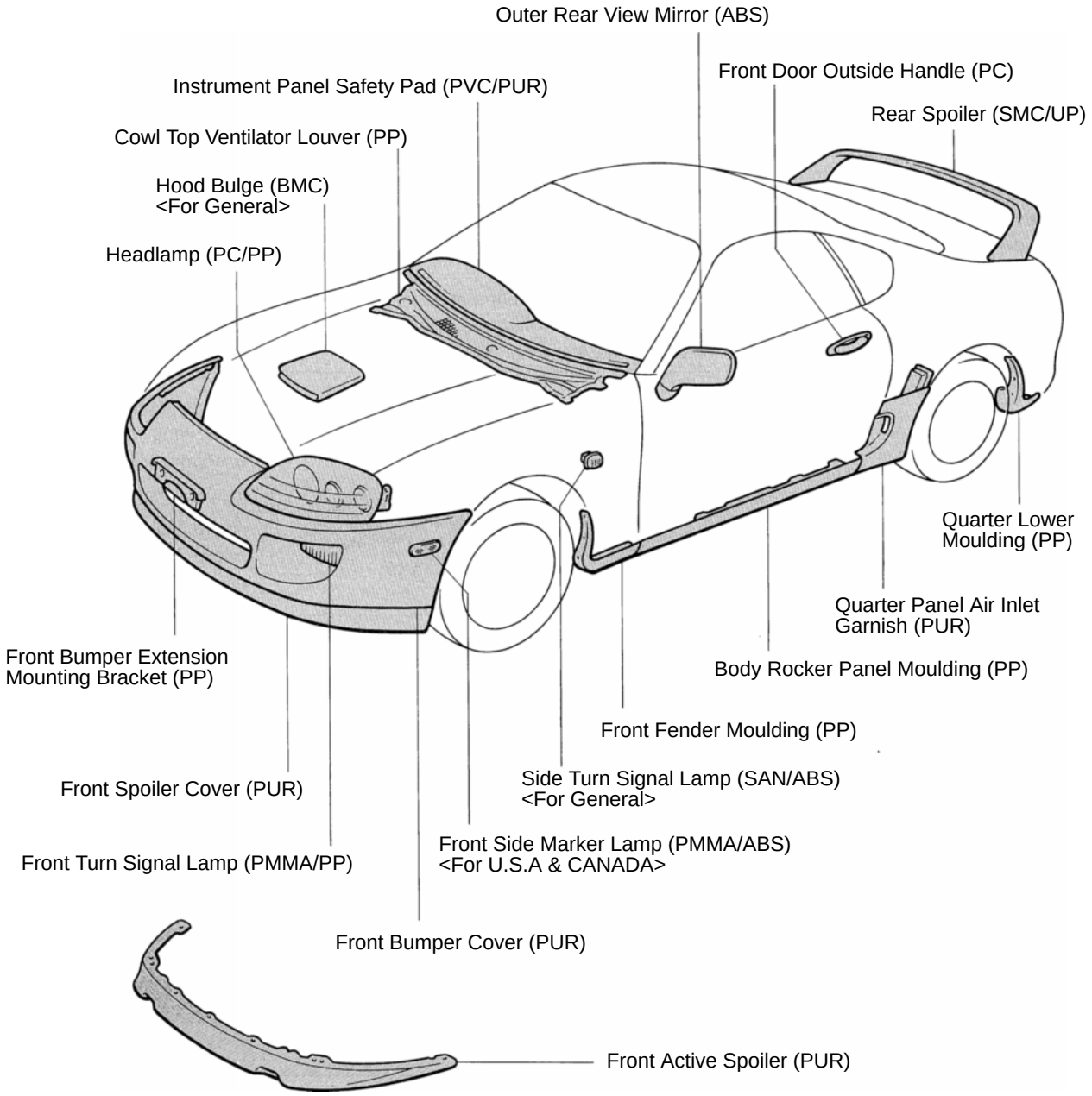

HINT:

- *Resin material differs with model.*

/ *Made up of 2 or more kinds of materials.*

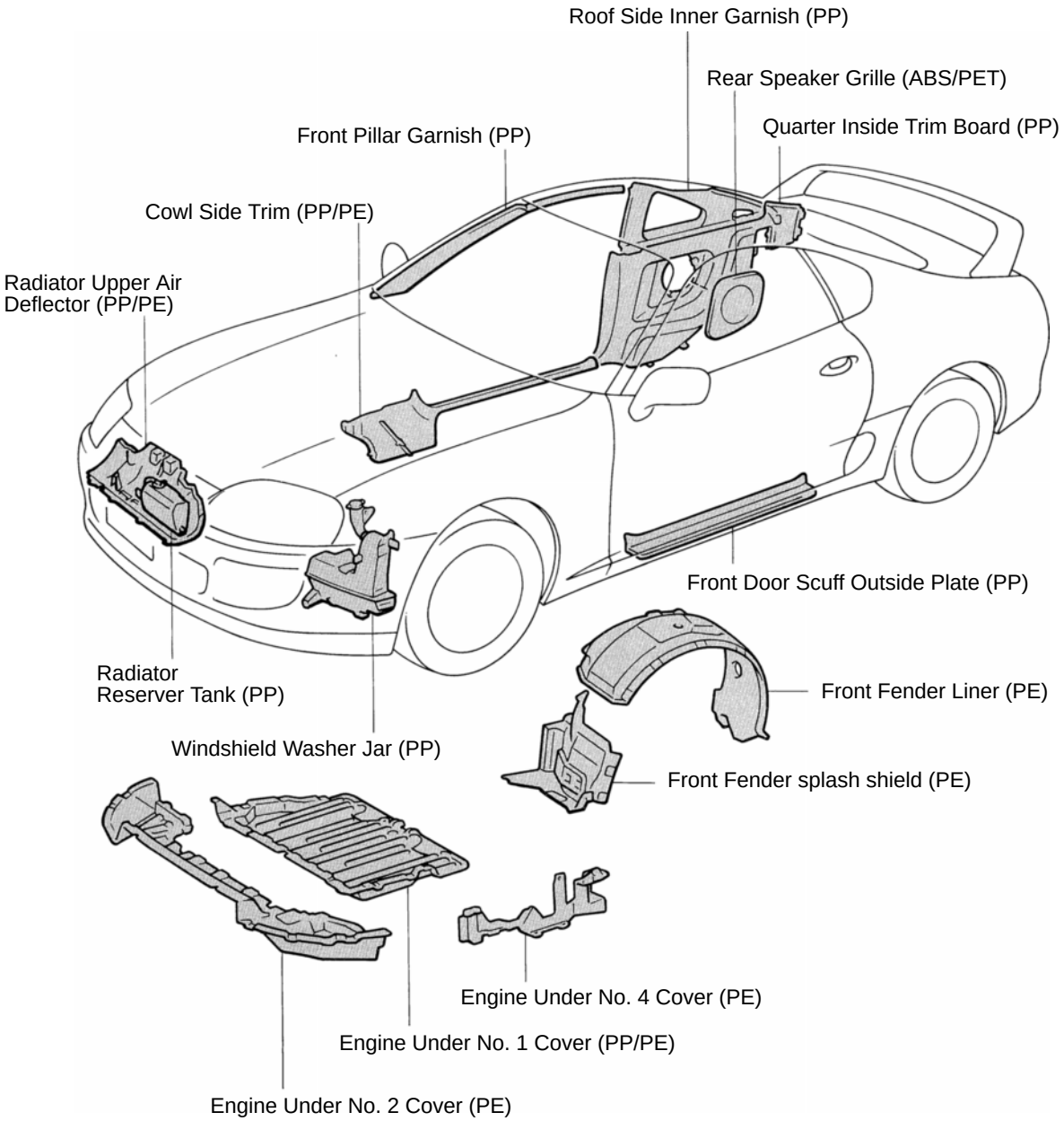

HINT:

- *Resin material differs with model.*

/ *Made up of 2 or more kinds of materials.*

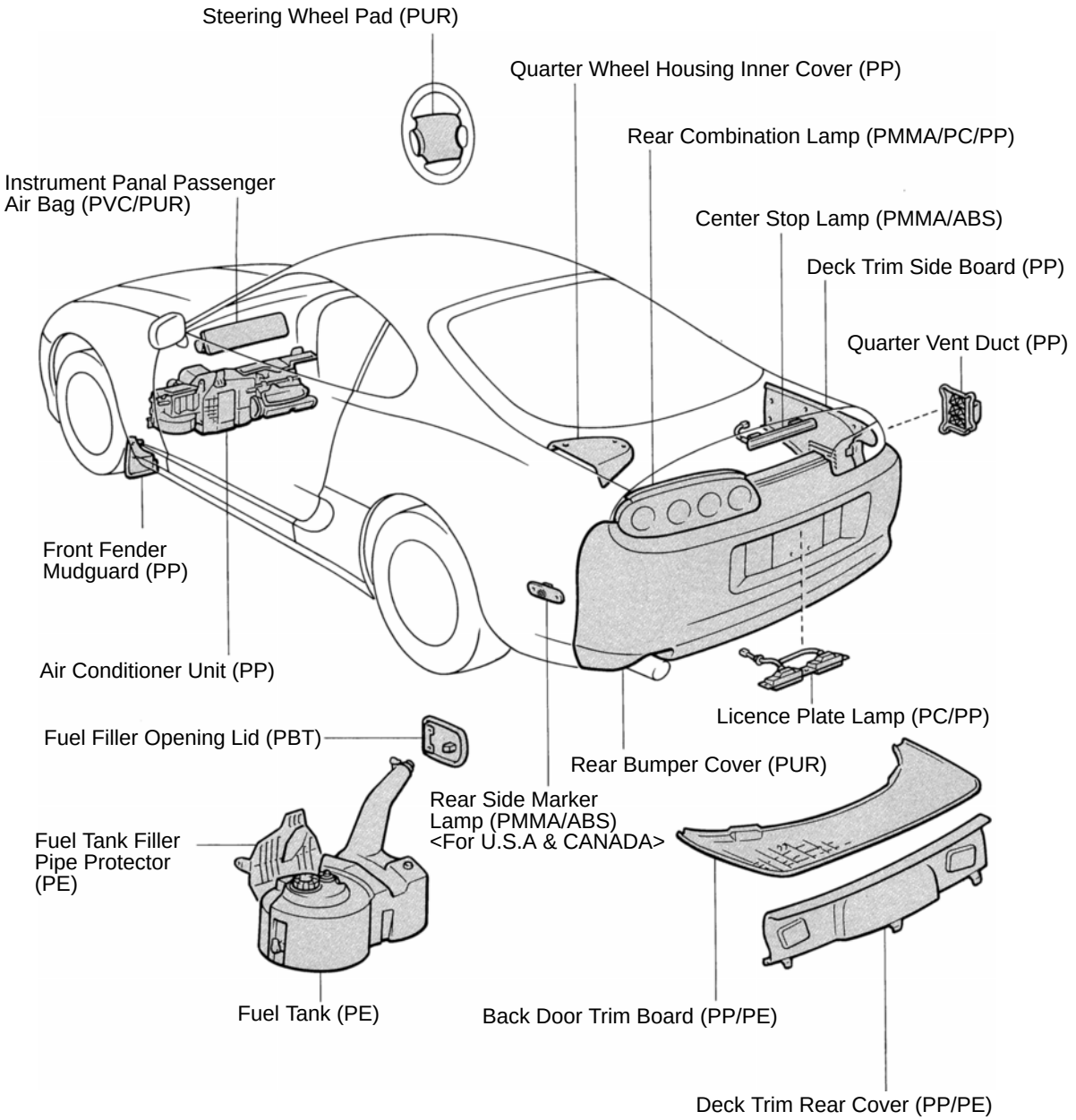

HINT:

- *Resin material differs with model.*

/ Made up of 2 or more kinds of materials.

STANDARD BODY MARKS

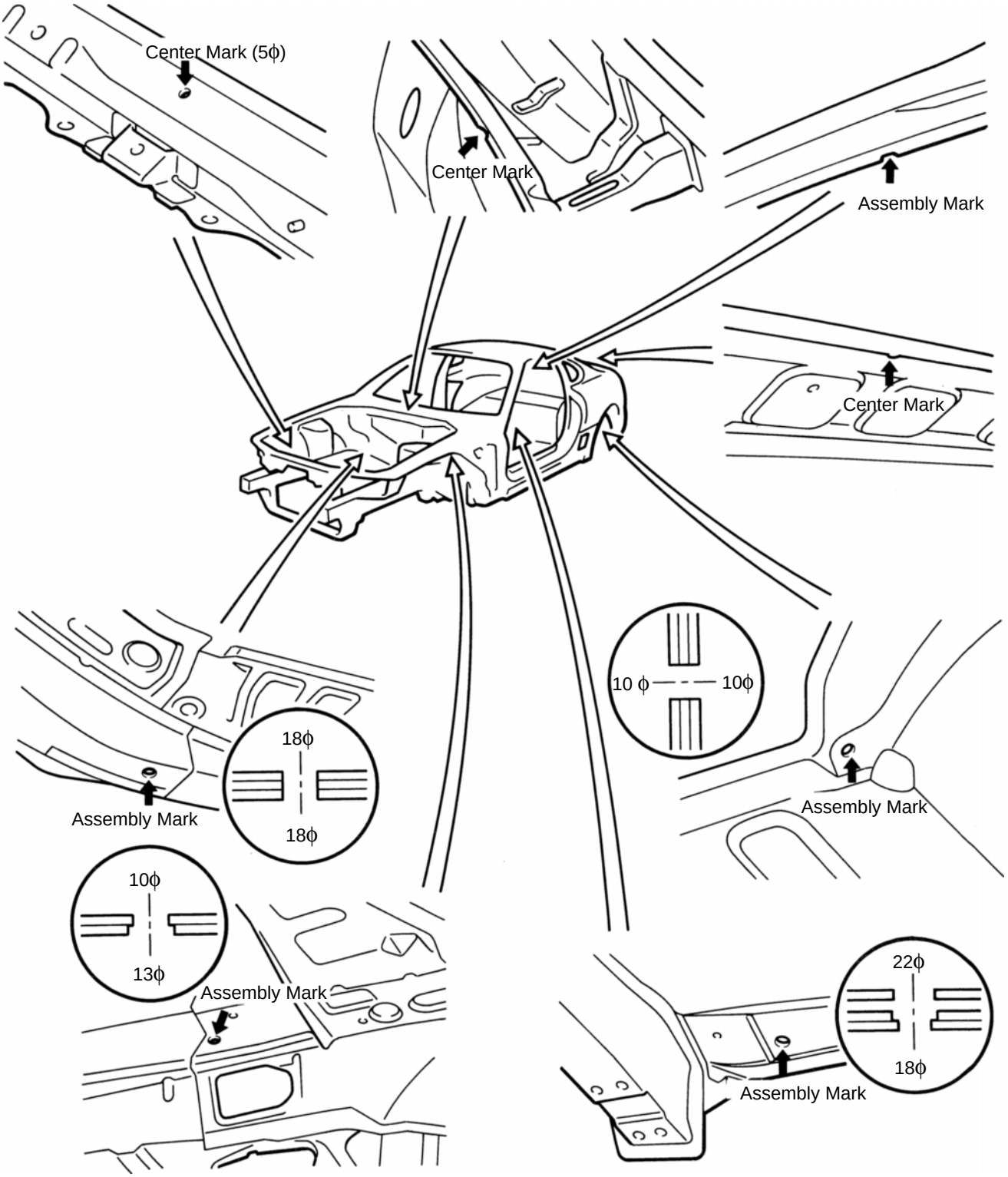

mm	in.
5	0.20
10	0.39
13	0.51
18	0.71
22	0.86

HIGH–STRENGTH STEEL (HSS) PARTS

Generally, High–Strength Steel (HSS) is that which has an intensity value of at 35 kgf/mm^2 (343 MPa), and distinguished from mild steel.

The handling of HSS is the same as for mild steel, but the following should be observed.

1. Panel Hammering: Because HSS is thinner than mild steel, care should be taken to avoid warping during hammering operations.
2. Removing Spot Welds: Because HSS is tougher than mild steel, damage will occur more easily to a regular drill. Therefore, an HSS Spot Cutter is recommended.
   Also, use a high–torque drill at low speed, and supply grinding oil to the drill during use.
3. Panel Welding: Panel welding procedures for HSS are exactly the same as for mild steel. Plug welding should be done with MIG (Metal Inert Gas) welder. Do not gas weld or braze panels at areas other than specified.

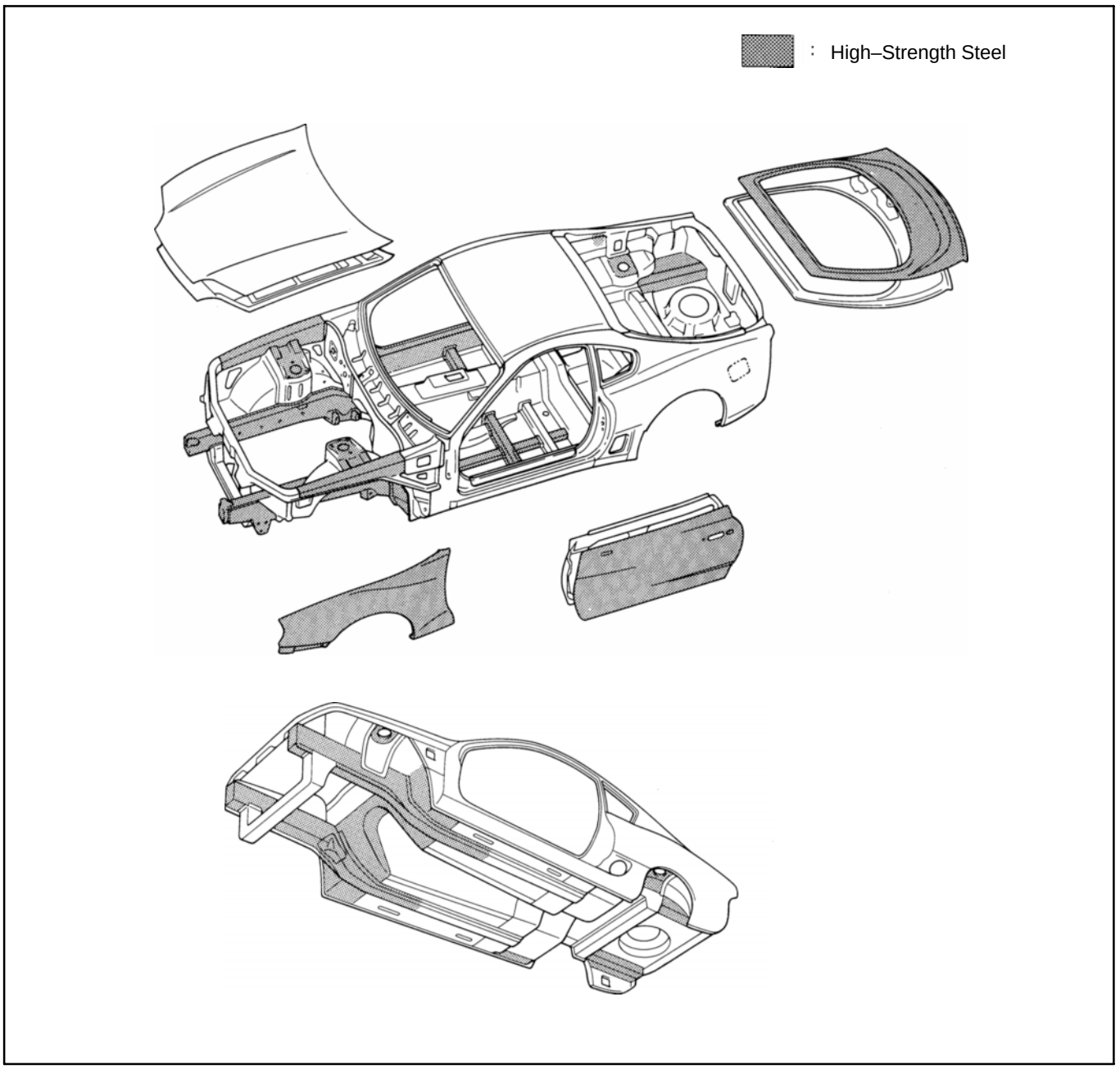

RUST–RESISTANT SHEET STEEL PARTS

Rust–Resistant Sheet Steel have zinc, tin or aluminum etc, plating over the base metal surface in order to improve the corrosion resistance of the sheet metal. For the vehicle's body panels, galvannealed sheet steel is widely used.
Body panel on TOYOTA models are made of two different galvannealed sheet steel. The ordinary galvannealed sheet steel has a zinc–iron alloy plating over the base metal surface. Zinc–iron alloy double–layer galvannealed sheet steel has zinc–iron alloy plating on both the outside and the back surface, plus a further iron–rich zinc–iron alloy plating which has good paint adhesion. These two galvannealed sheet steels are used selectively according to need.

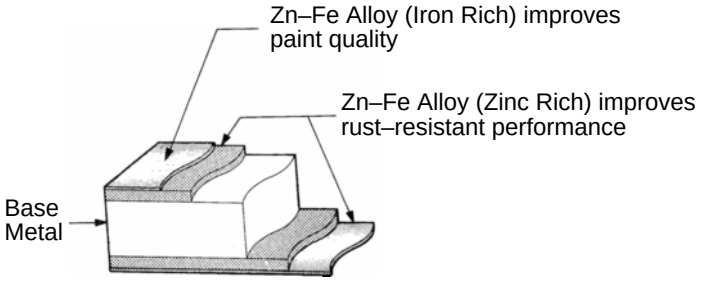

Excelite II

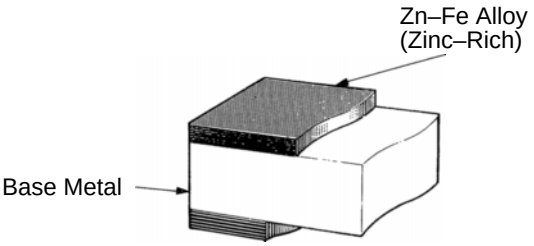

Galvannealed Sheet Steel

The handing of Rust–Resistant Sheet Steel is the same as for ordinary sheet steel, but the following should be observed.

1. Panel Welding: The paint as well as the zinc portion must be removed completely from the welding area to guarantee good welding integrity.
2. Anti–Rust Treatment: Since the zinc plating is lost after welding, anti–rust treatment of the welded area must be thoroughly performed (refer to section AR).

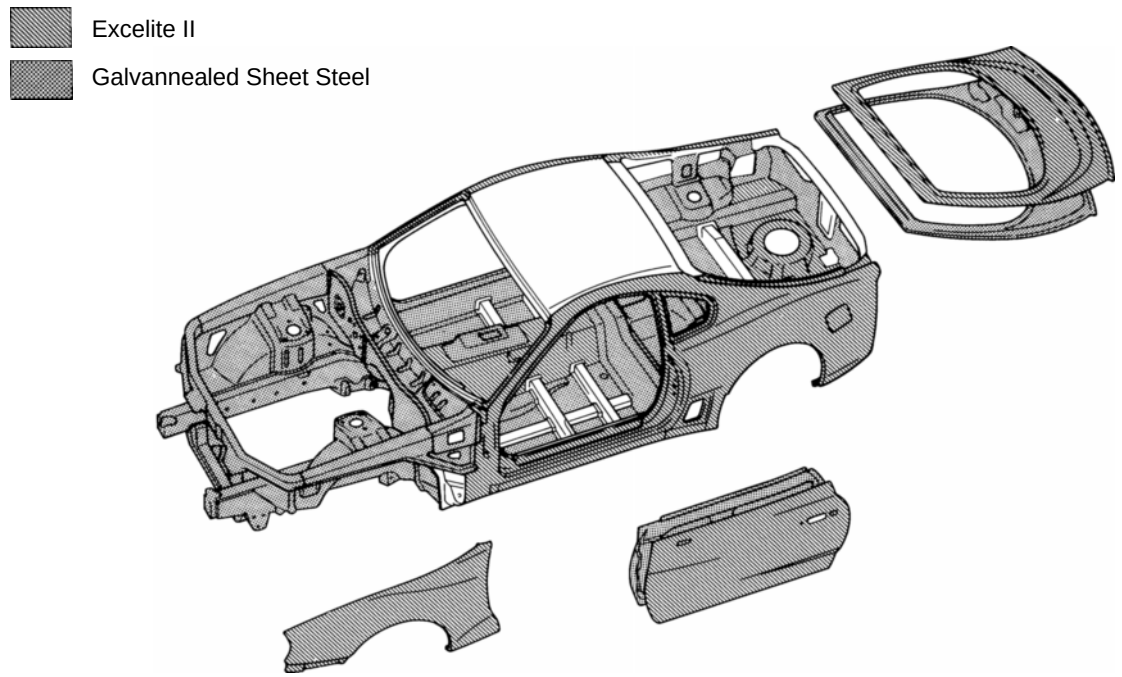

RADIATOR UPPER SUPPORT (ASSY)

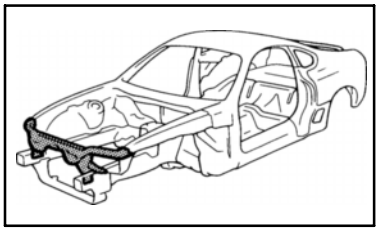

REMOVAL

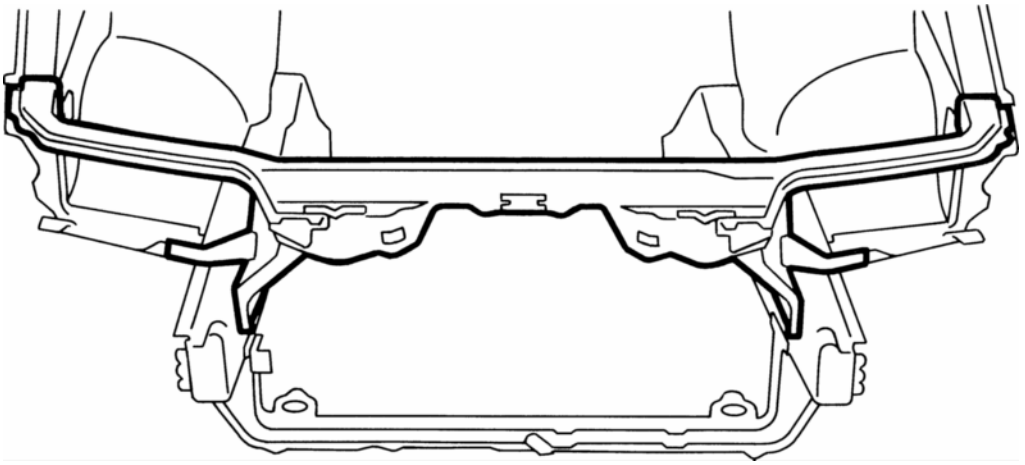

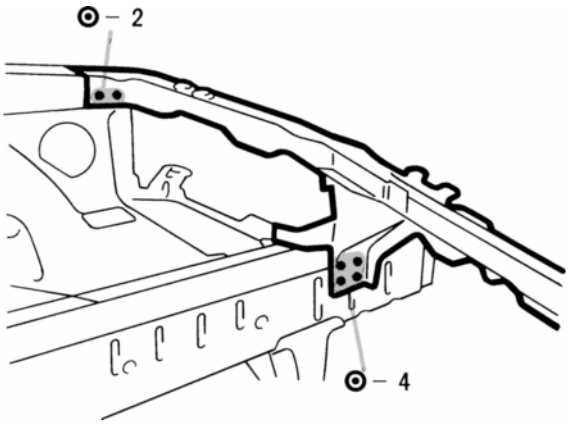

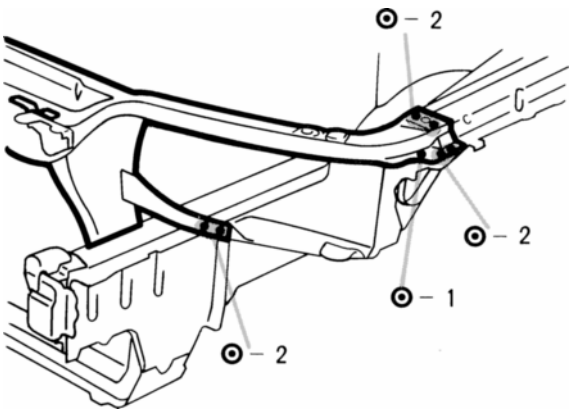

INSTALLATION

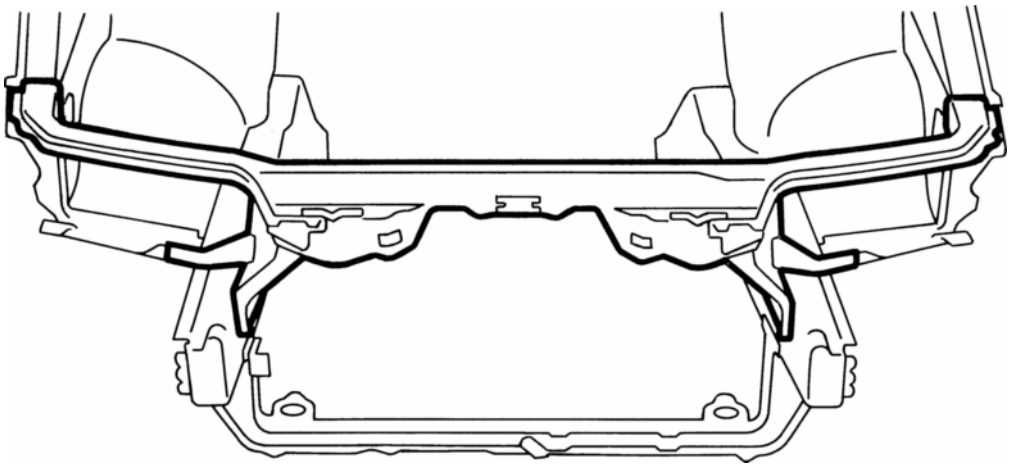

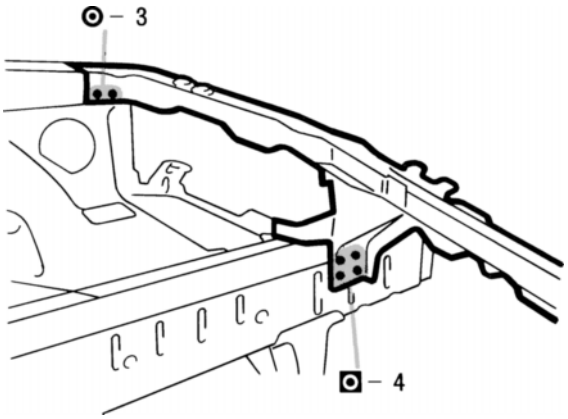

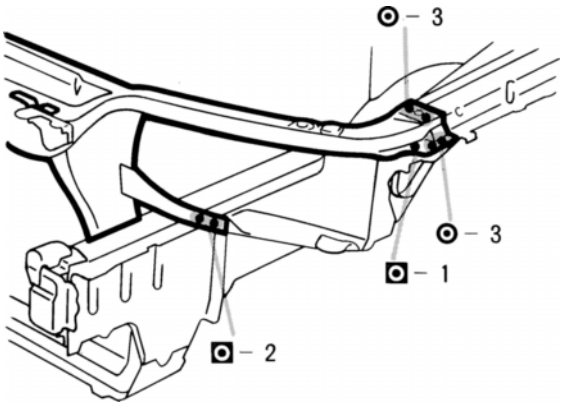

1. Temporarily install the new parts and measure each part in accordance with the body dimension diagram.

HINT: First install the hood lock support.

FRONT CROSSMEMBER (ASSY)

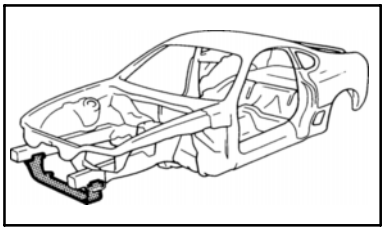

REMOVAL

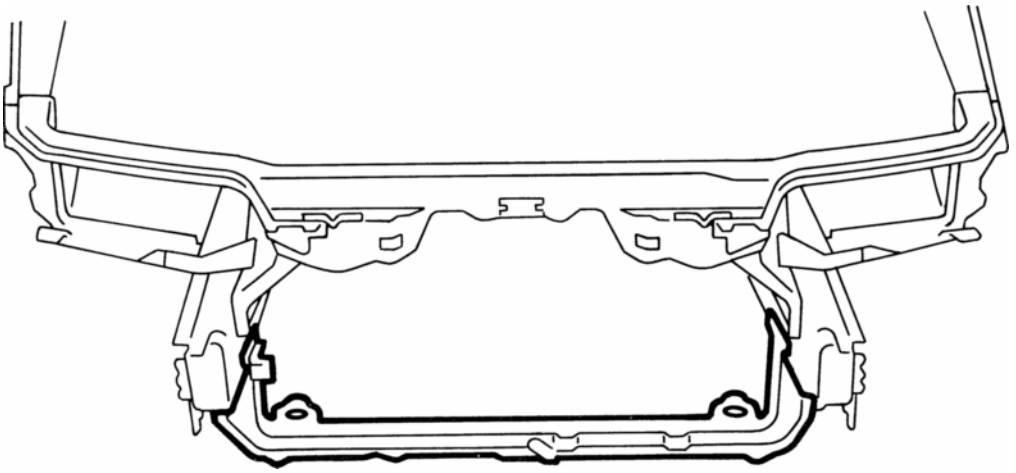

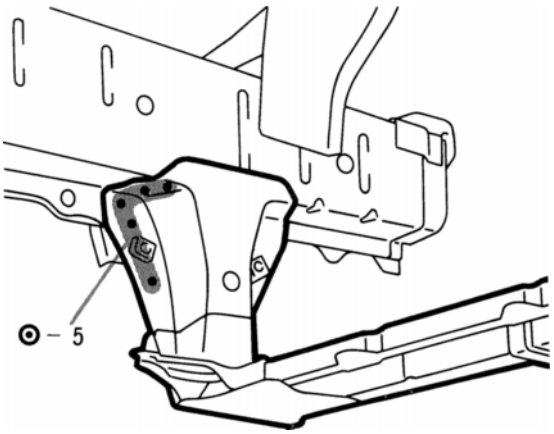

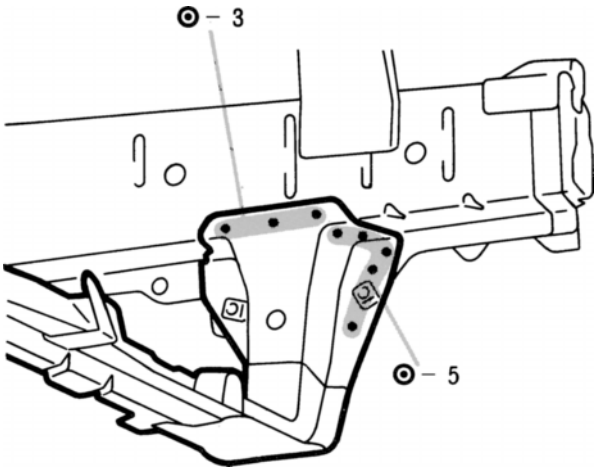

INSTALLATION

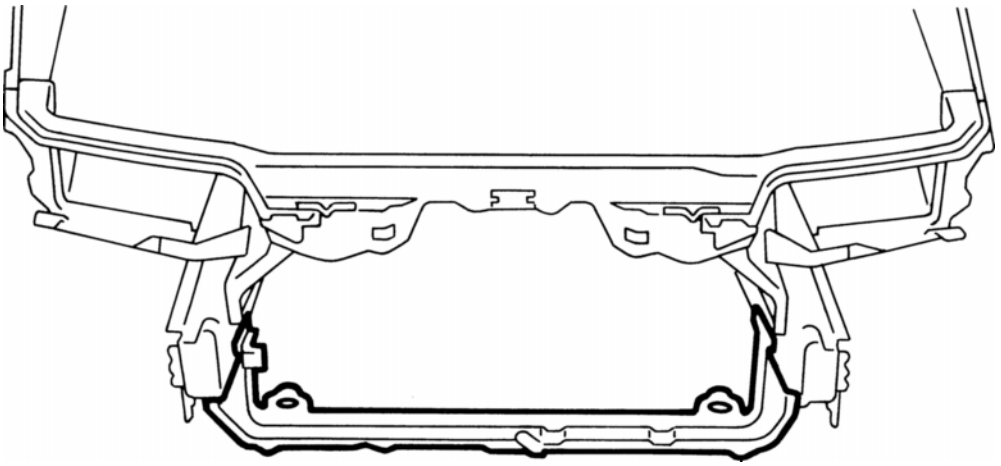

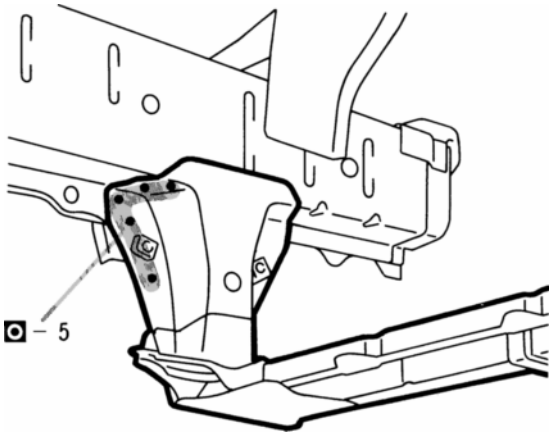

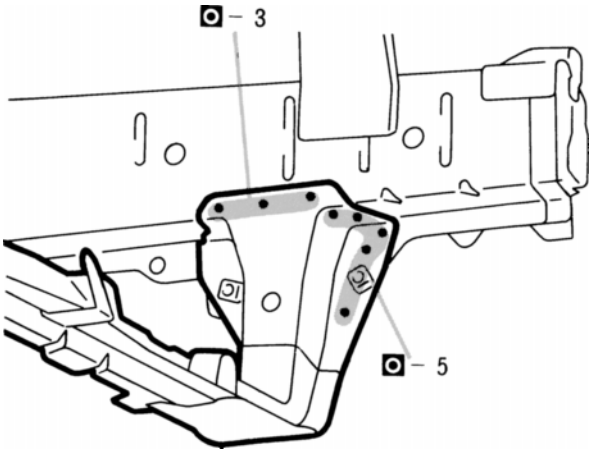

1. Temporarily install the new parts and measure each part in accordance with the body dimension diagram.

FRONT APRON TO COWL SIDE UPPER MEMBER (ASSY)

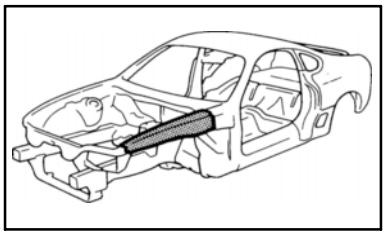

REMOVAL (With the front fender front apron removed.)

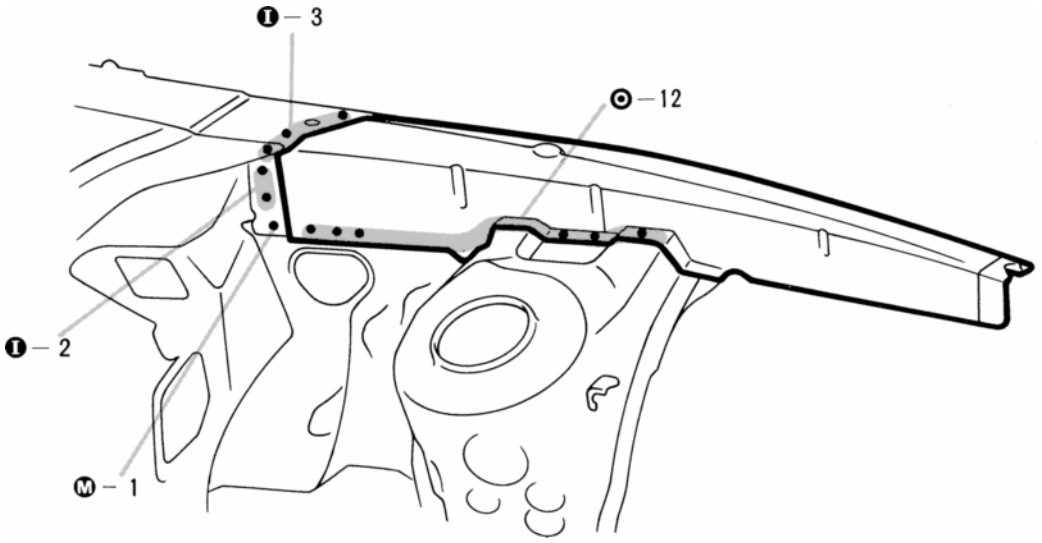

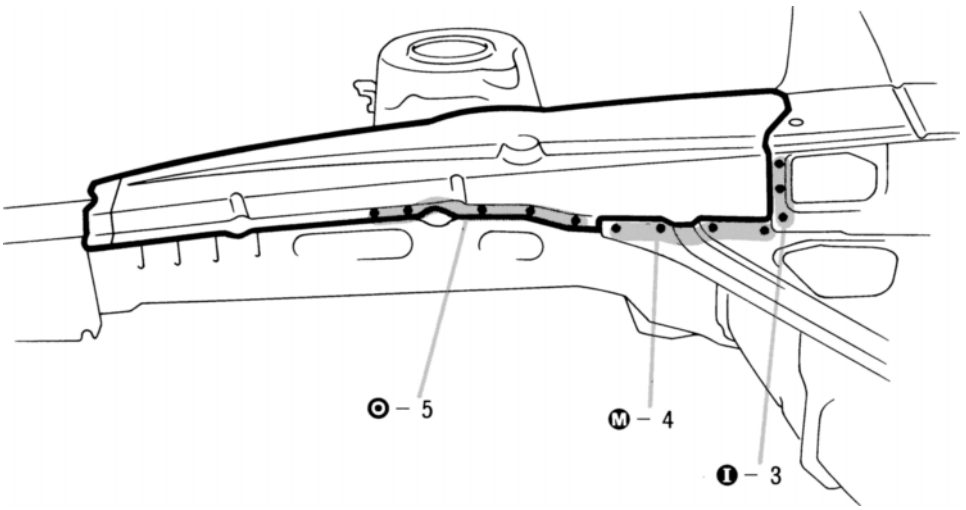

INSTALLATION

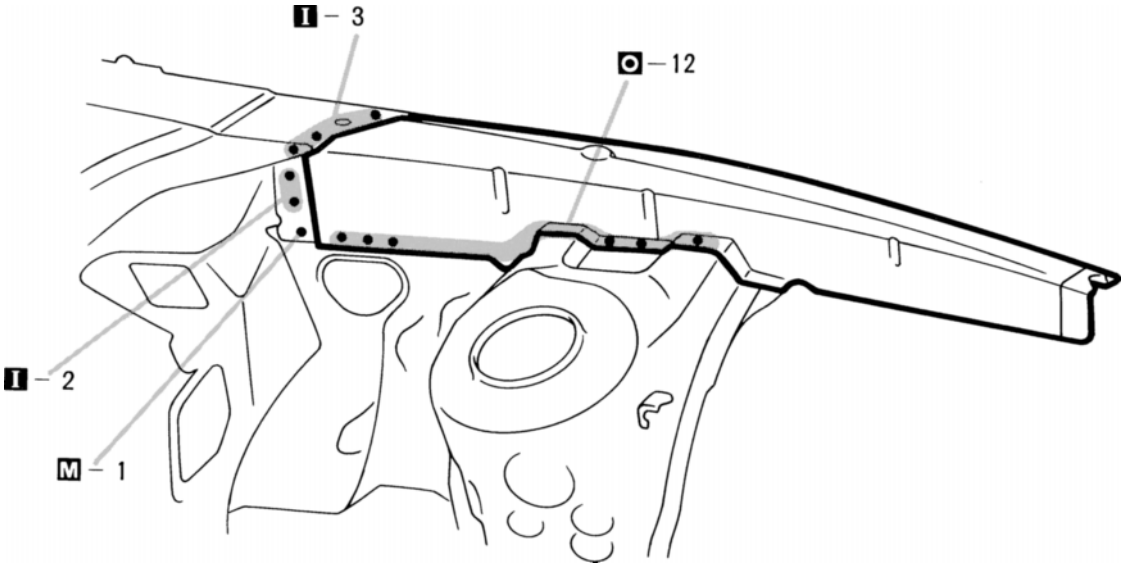

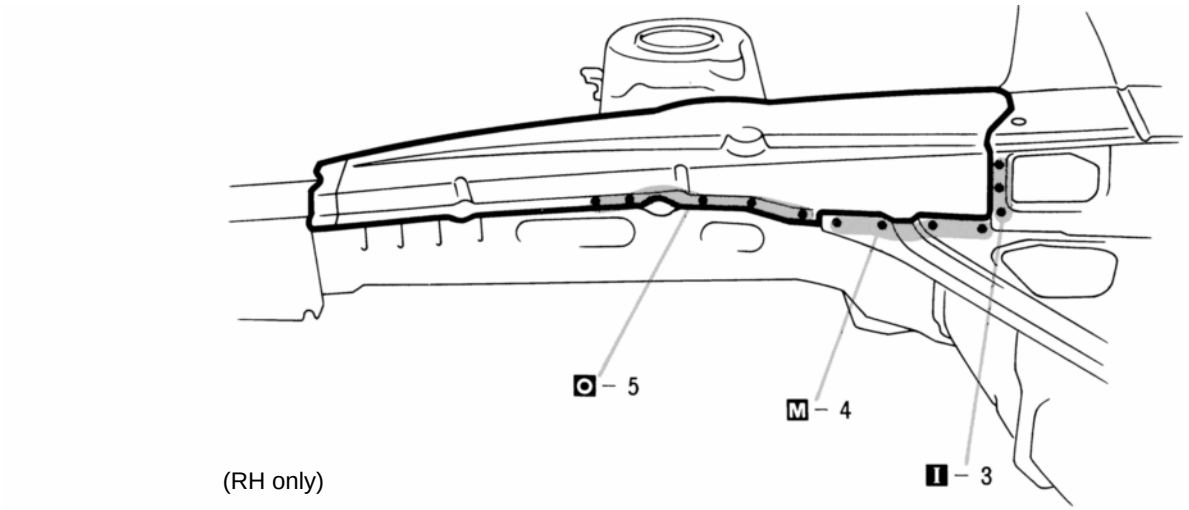

(RH only)

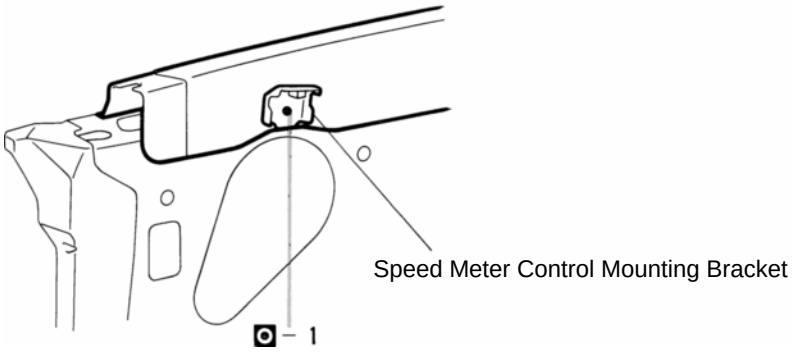

1. Temporarily install the new parts and measure each part in accordance with the body dimension diagram.
2. Temporarily install the front fender and hood, and check the fit.

FRONT FENDER FRONT APRON (ASSY)

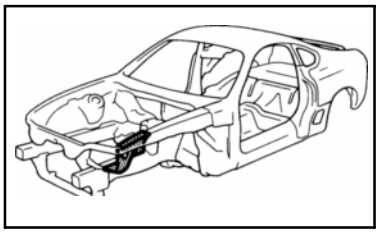

REMOVAL (With the radiator upper support removed.)

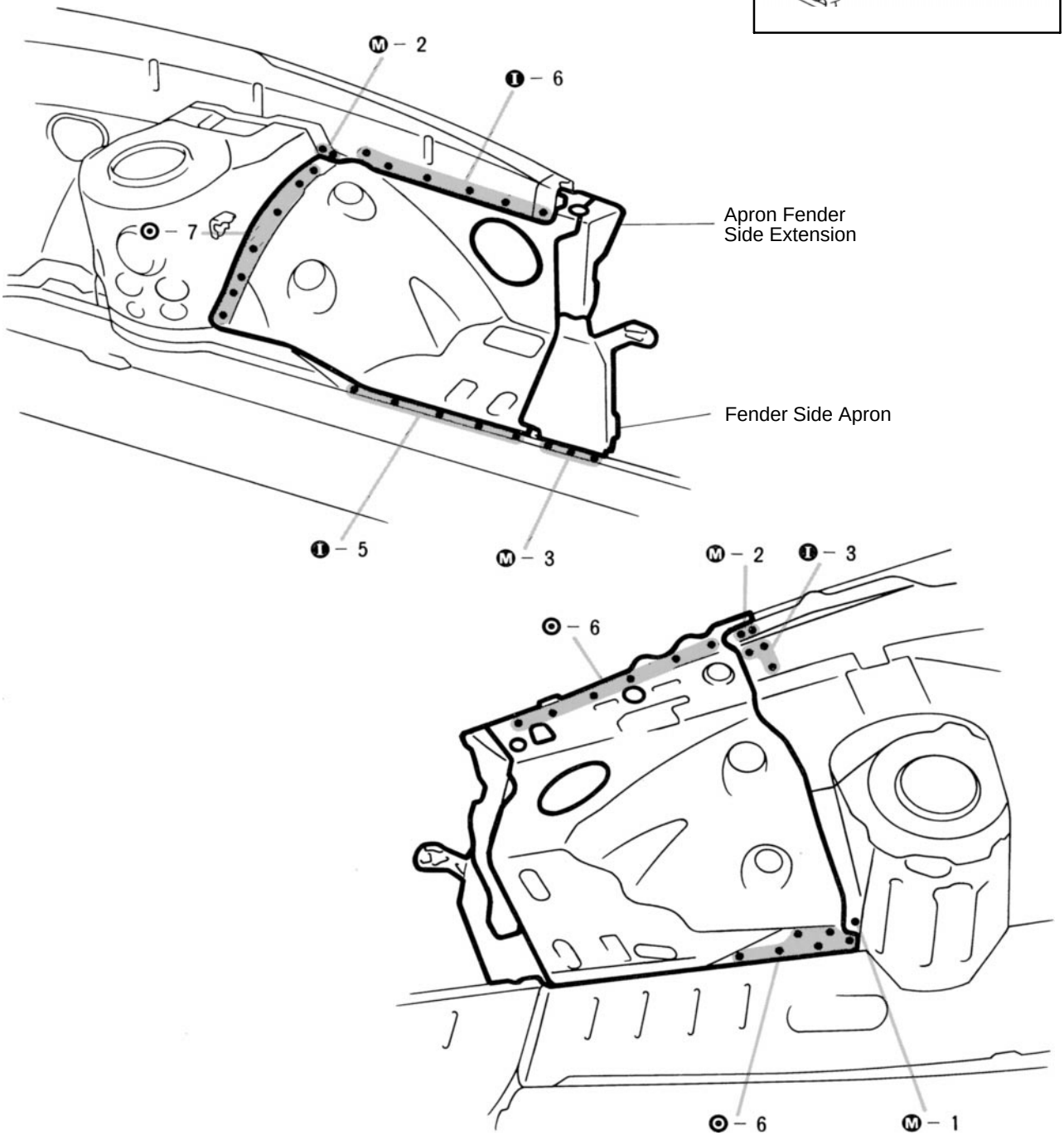

1. Replace the fender side apron and apron fender side extension at the same time.

INSTALLATION

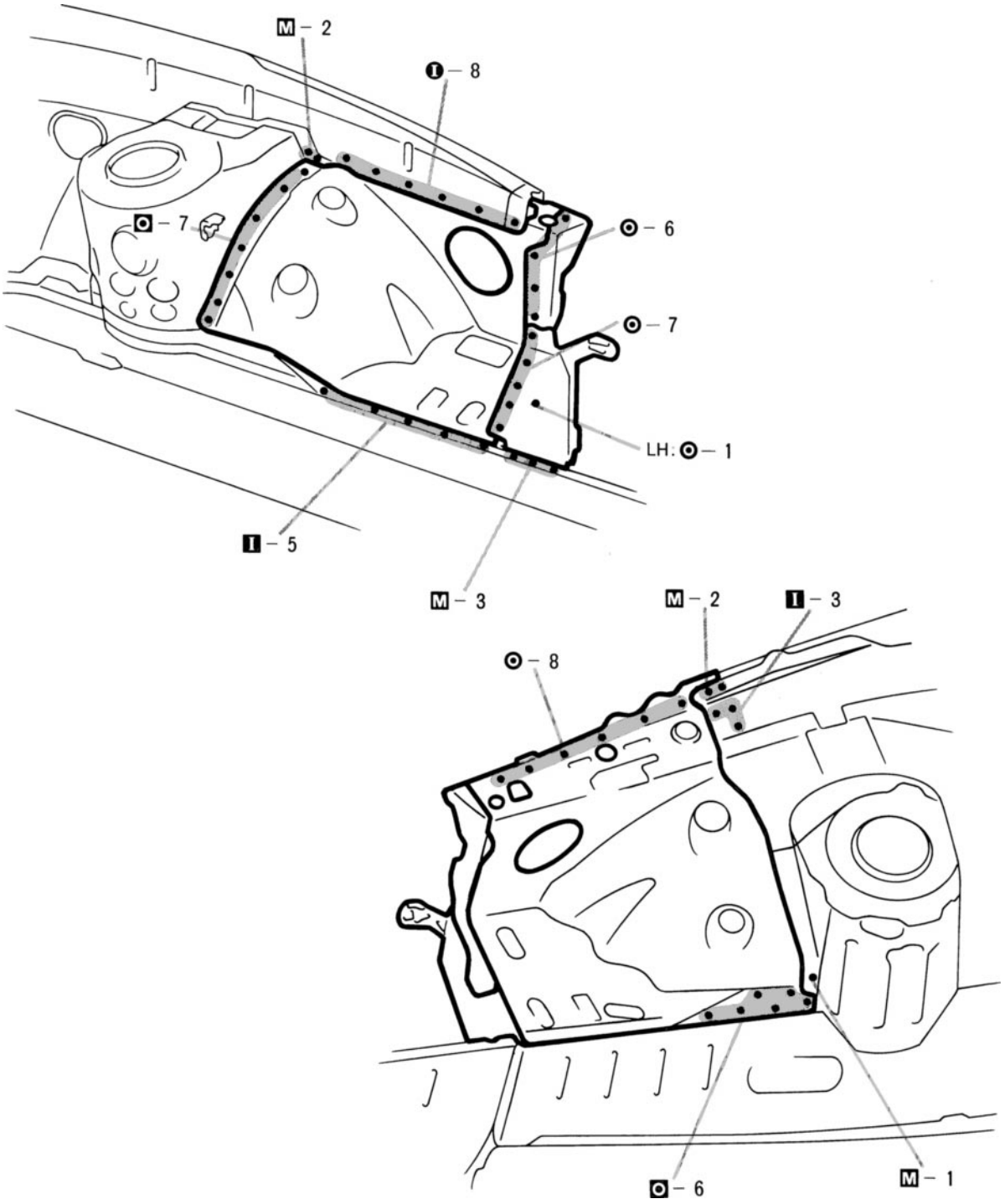

1. Temporarily install the new parts and measure each part in accordance with the body dimension diagram.

FRONT FENDER APRON (ASSY)

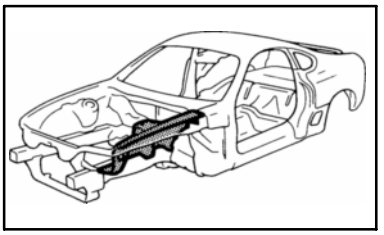

REMOVAL (With the radiator upper support removed.)

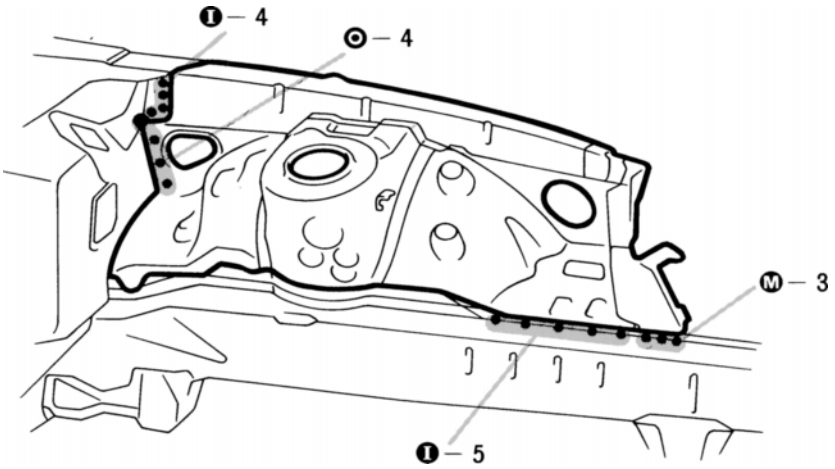

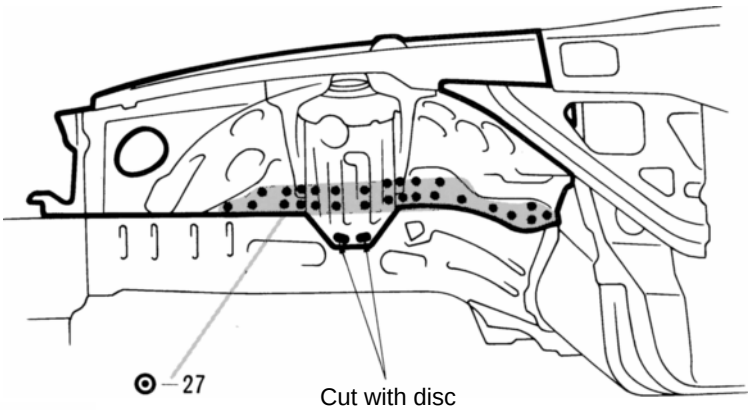

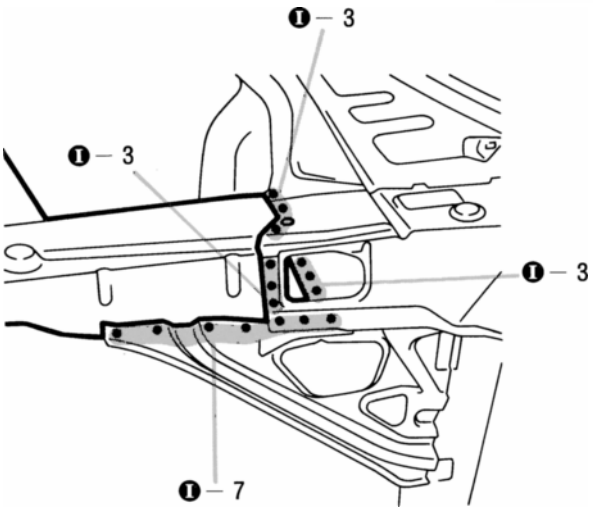

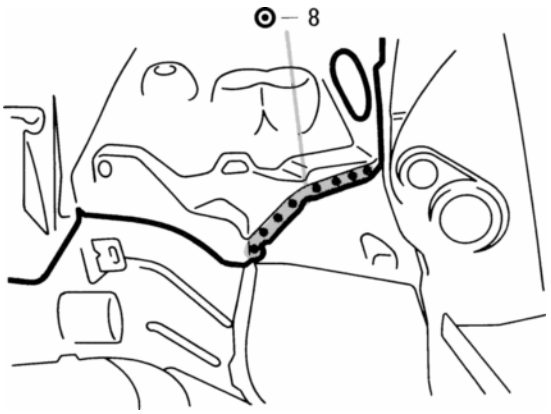

INSTALLATION

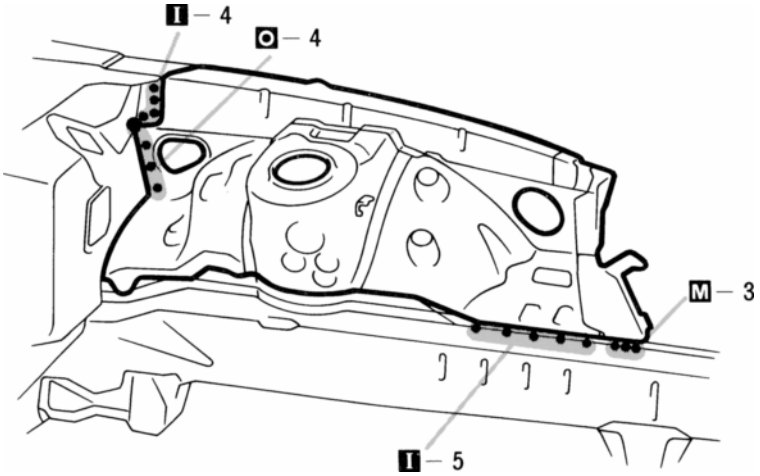

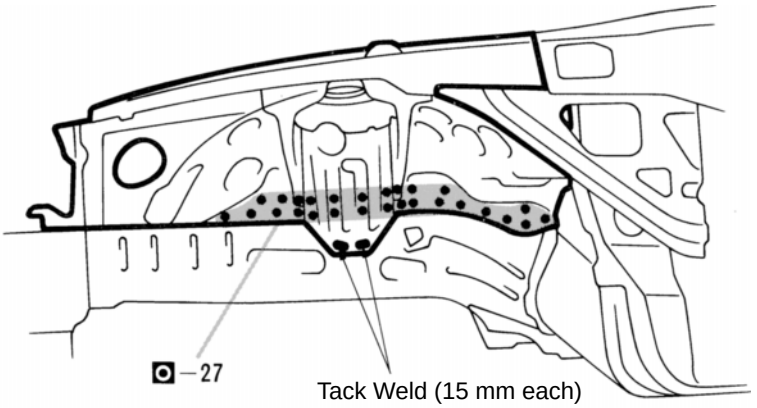

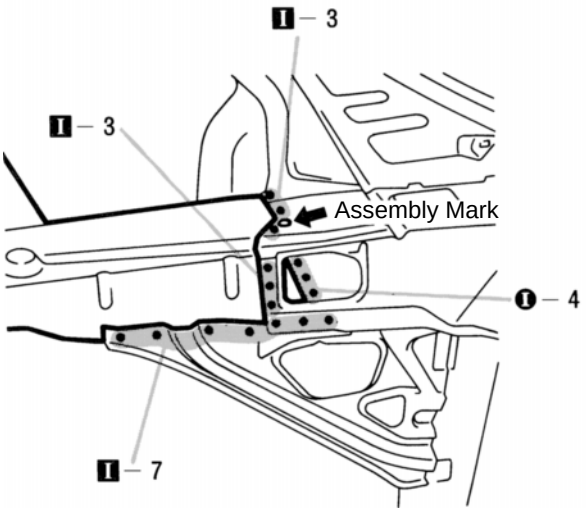

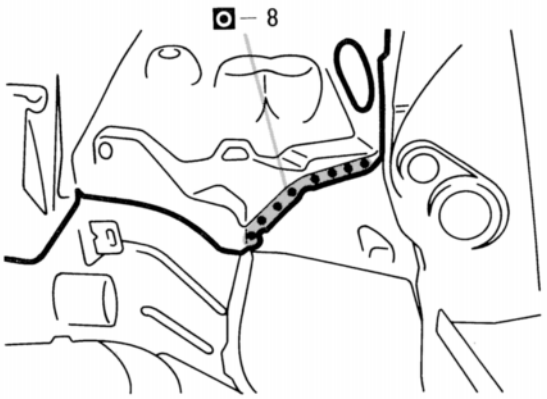

1. When temporarily installing the new parts, determine the installation position by the assembly mark.
2. Measurements must be accurate with the body dimension diagram, as this affects the front wheel alignment.
3. Temporarily install the front fender and hood, and check the fit.

mm	in.
15	0.59

FRONT SIDE MEMBER (CUT–P)

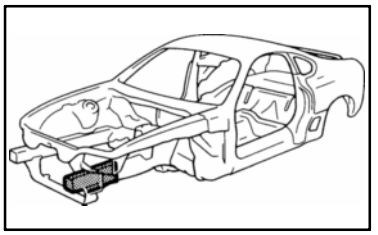

REMOVAL (With the radiator upper support and front crossmember removed.)

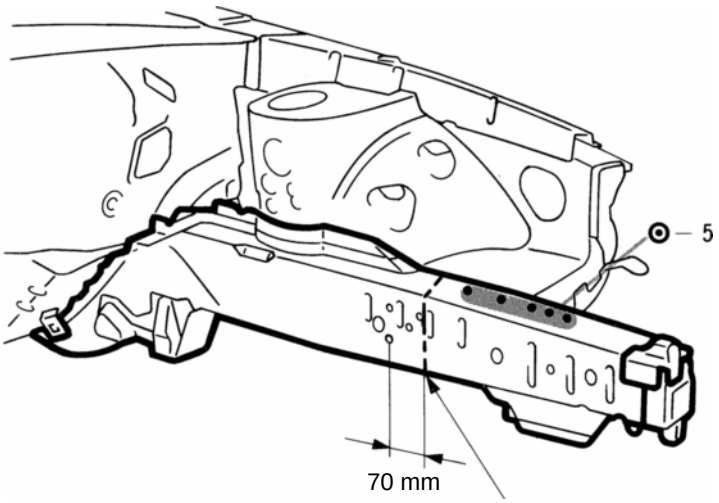

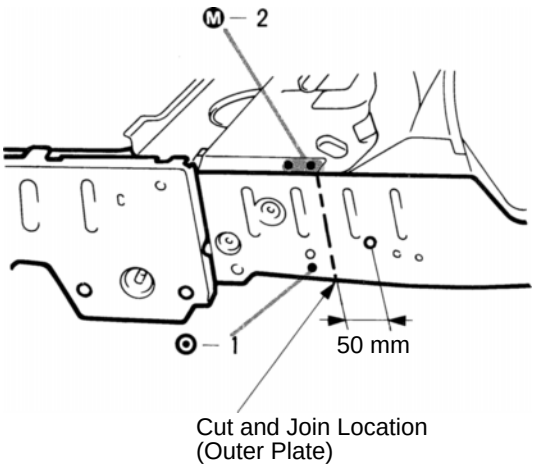

1. Cut and join the parts at the location shown above.

HINT: Shift the cut and join location of the outer plate, inner member and reinforcement.

mm	in.
50	1.97
70	2.76

INSTALLATION

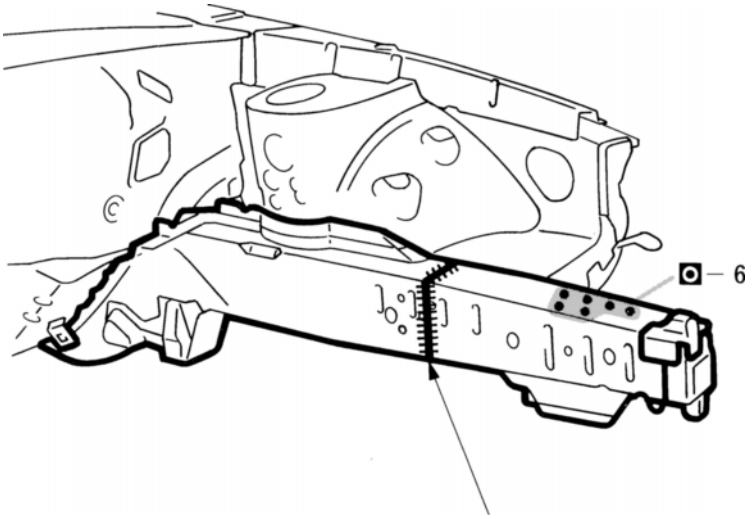

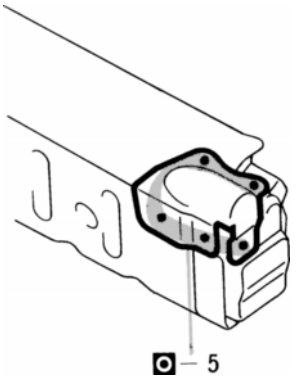

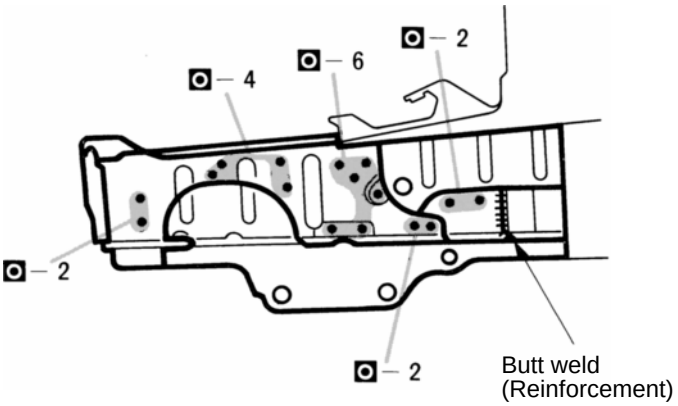

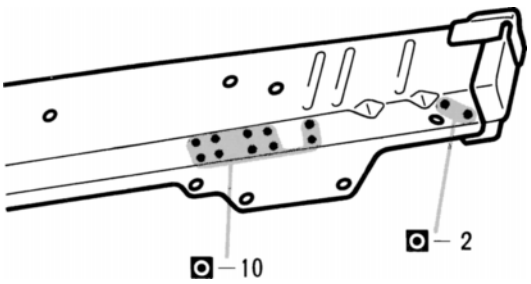

1. Temporarily install the new parts and measure each part in accordance with the body dimension diagram.
2. After butt welding the inner member and reinforcement, install the outer plate.

INSTALLATION (Cont'd)

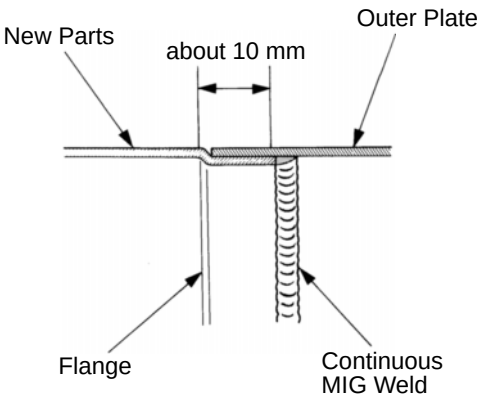

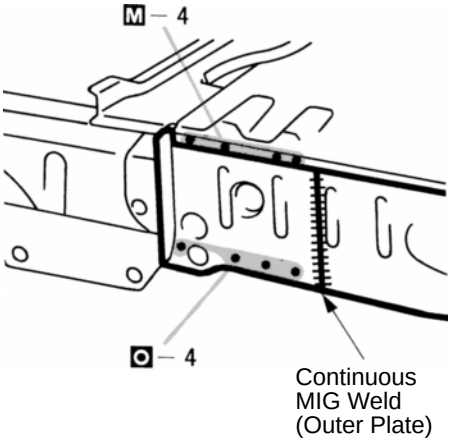

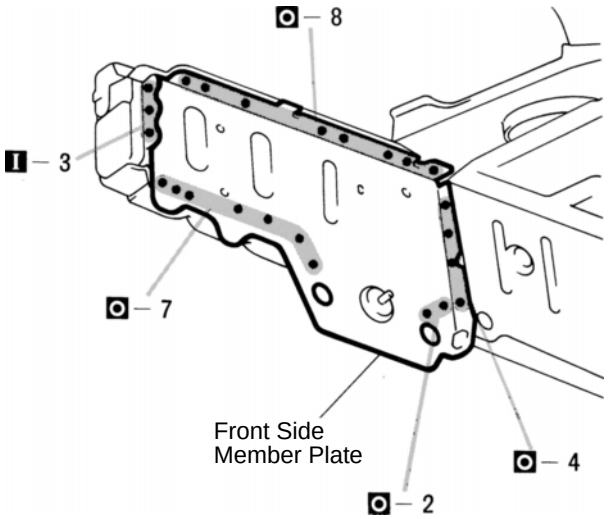

3. Provide a flange of about 10 mm (0.39 in.) on the new outer plate, then overlap it with the vehicle side panel and weld them with a continuous MIG weld to the edge.

mm	in.
10	0.39

FRONT SIDE MEMBER (ASSY)

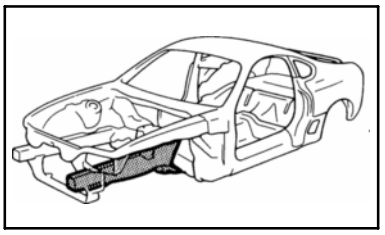

REMOVAL (With the front crossmember and front fender apron removed.)

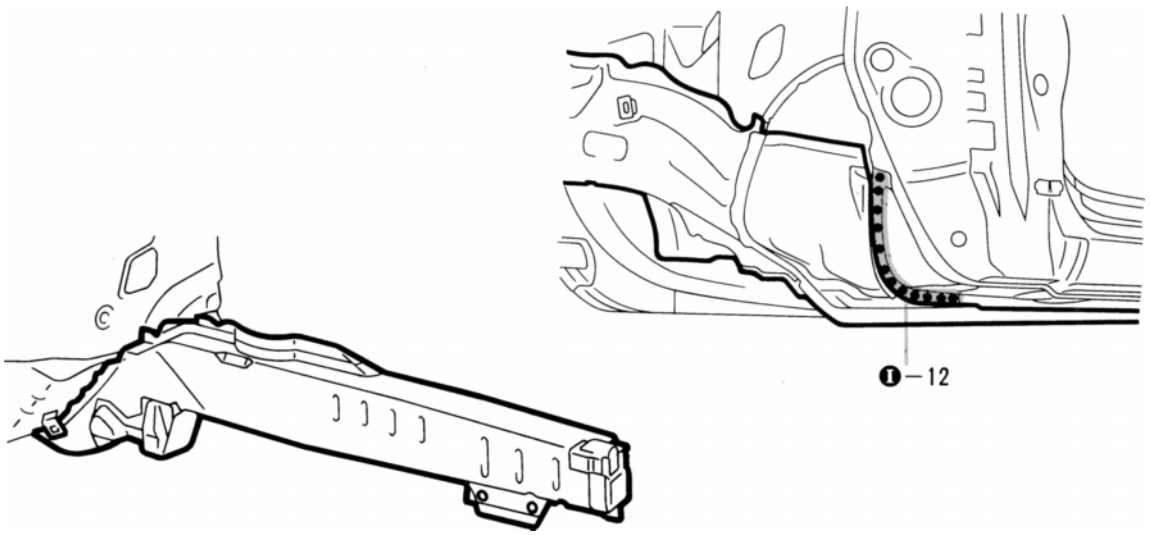

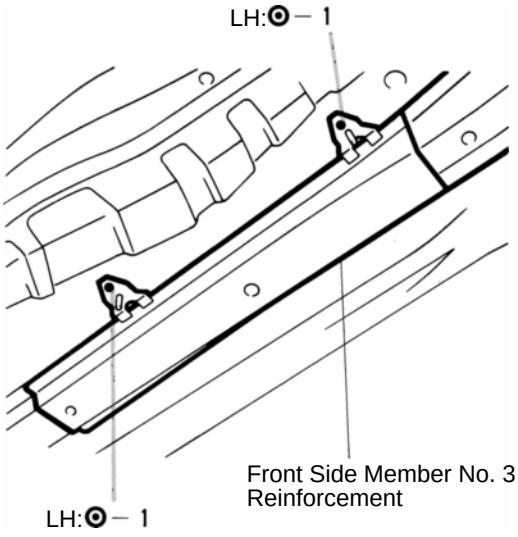

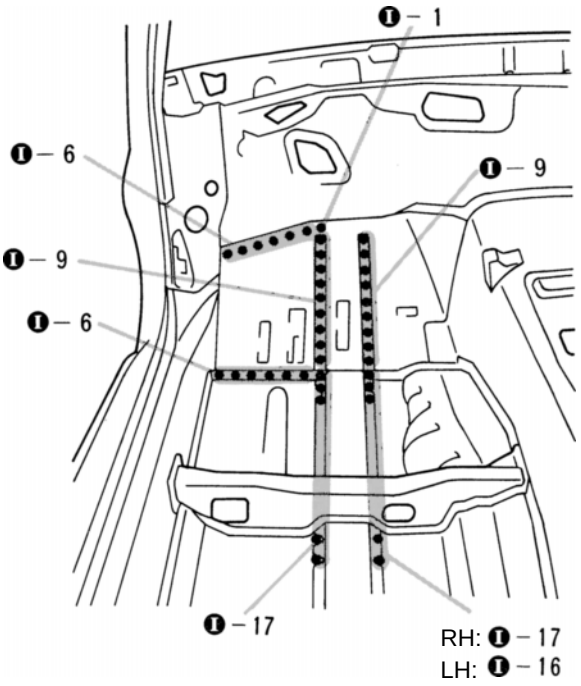

1. Replace the front side member No. 3 reinforcement at the same time.

INSTALLATION

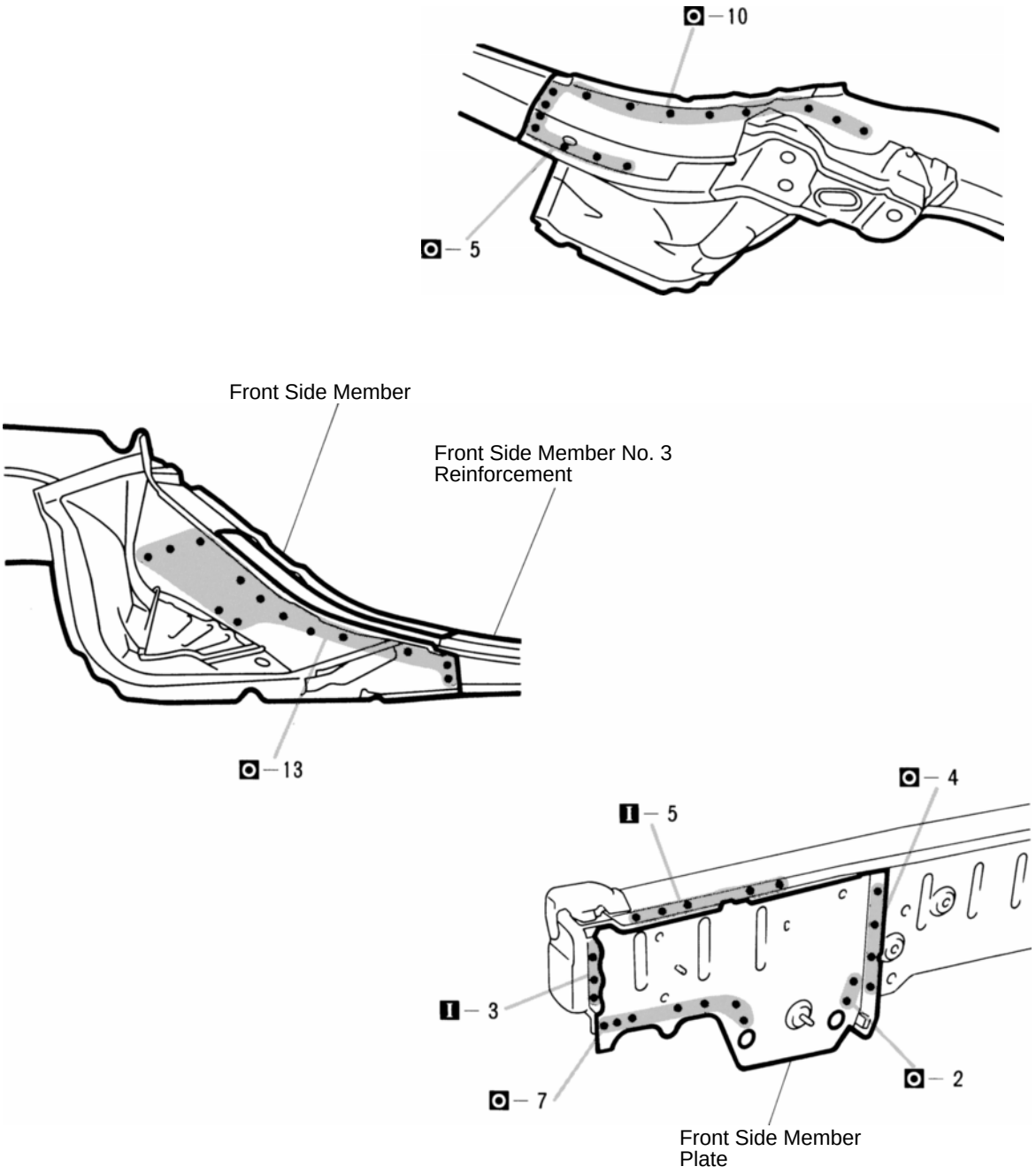

1. Before temporarily installing the new front side member, weld the front side member No. 3 reinforcement with standard points.

2. Temporarily install the new parts and measure each part in accordance with the body dimension diagram.

HINT: Make sure each measurement is correct, as this part affects the front wheel alignment.

INSTALLATION (Cont'd)

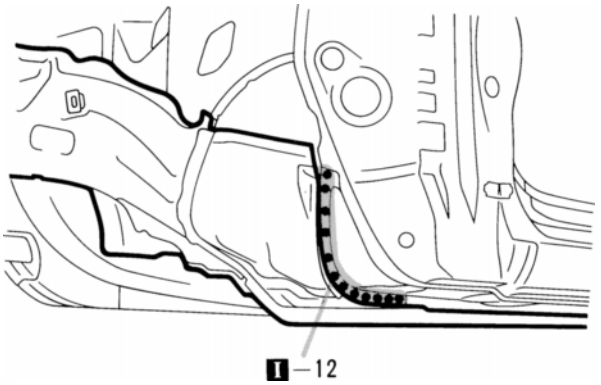

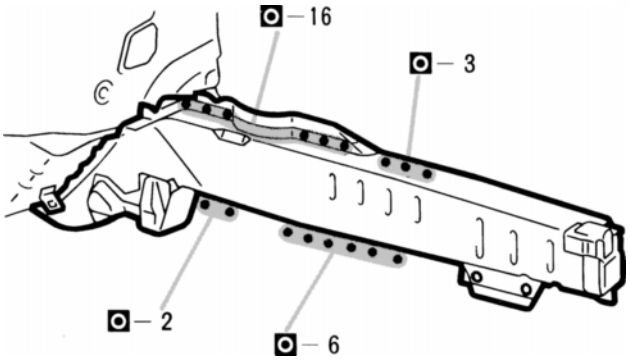

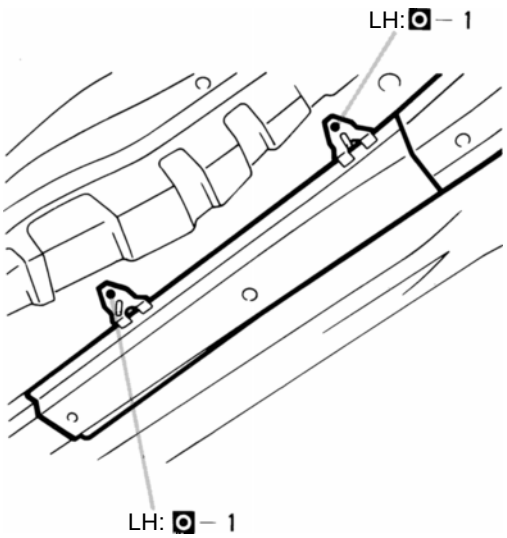

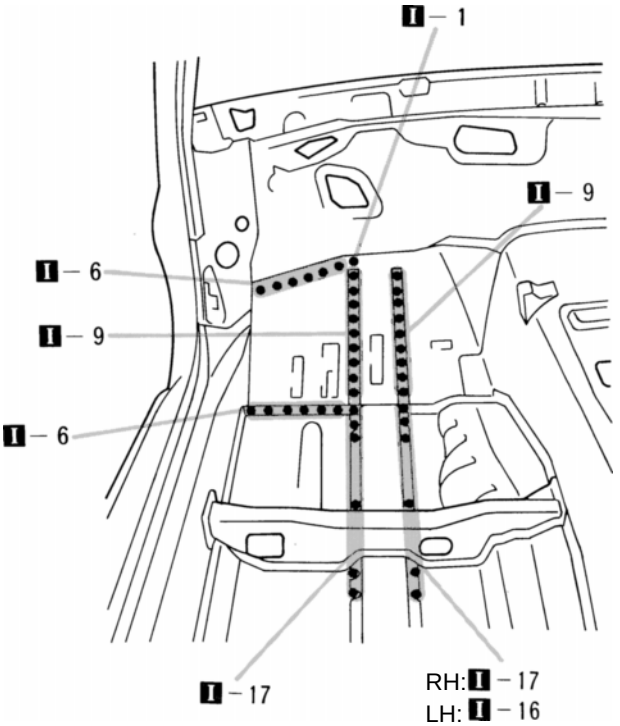

COWL TOP SIDE PANEL (ASSY)

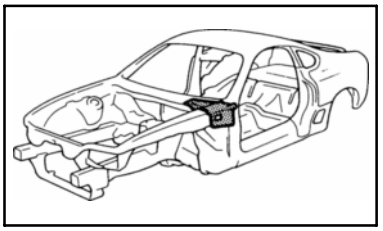

REMOVAL

(Right Side)

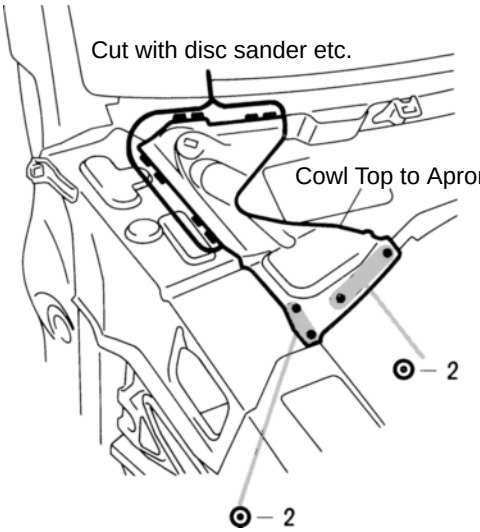

(Left Side)

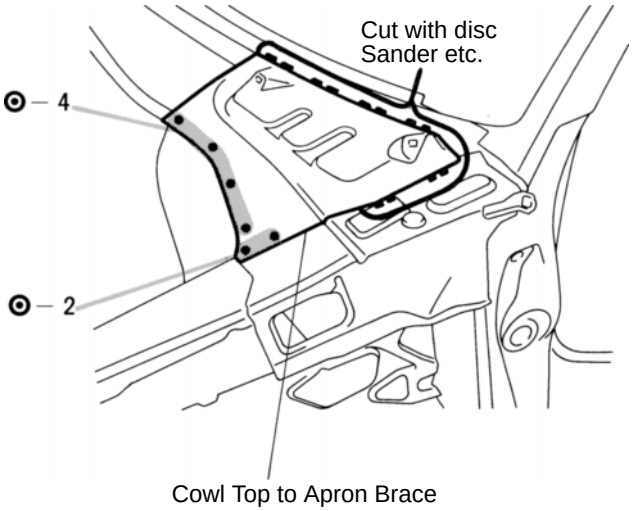

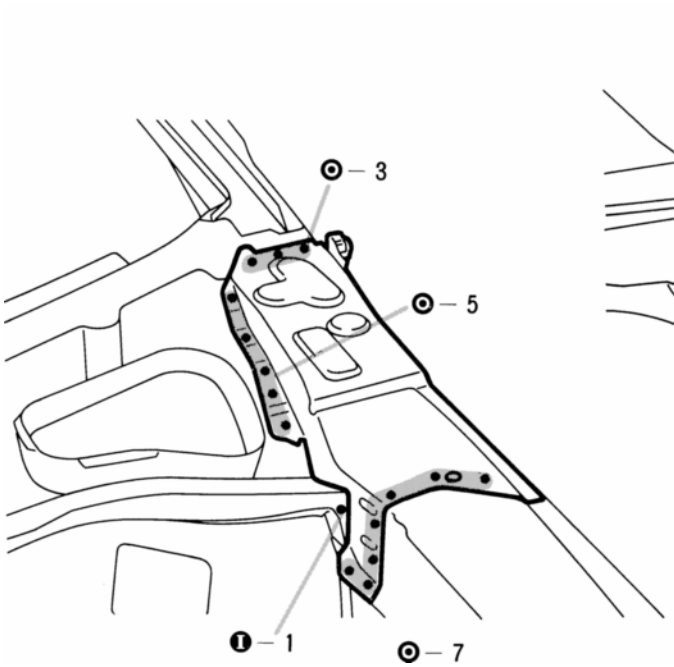

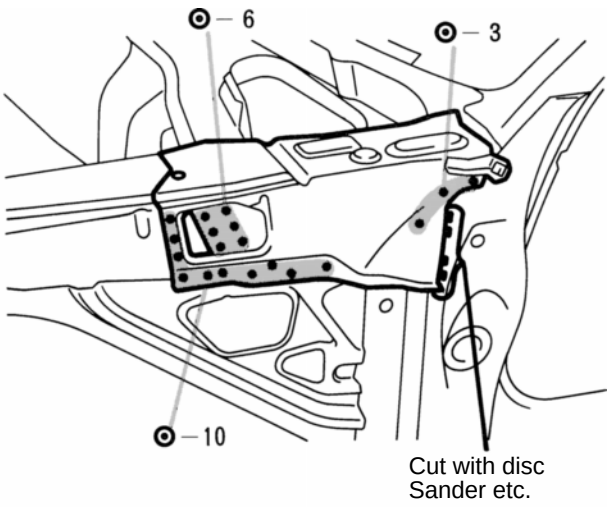

1. After removing the cowl top to apron brace, remove the cowl top side panel.

INSTALLATION

(Right Side)

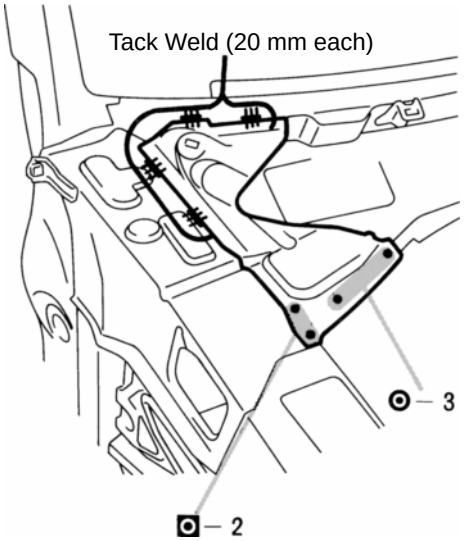

(Left Side)

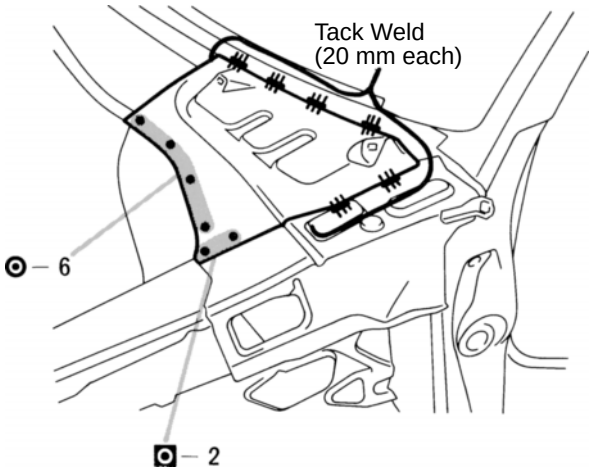

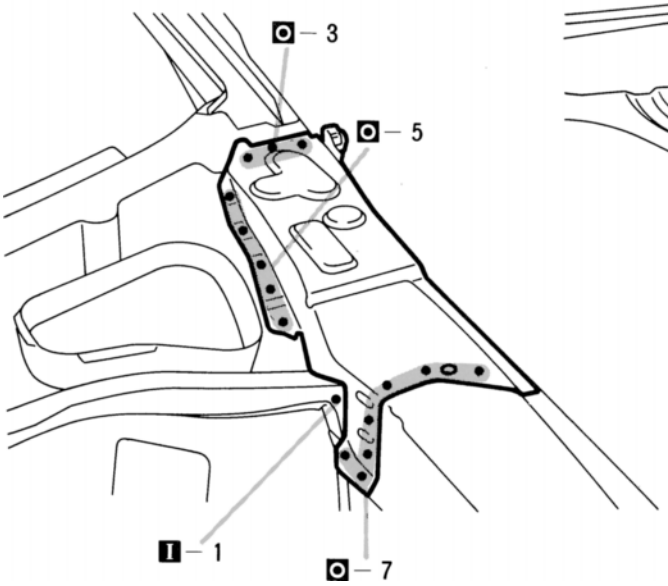

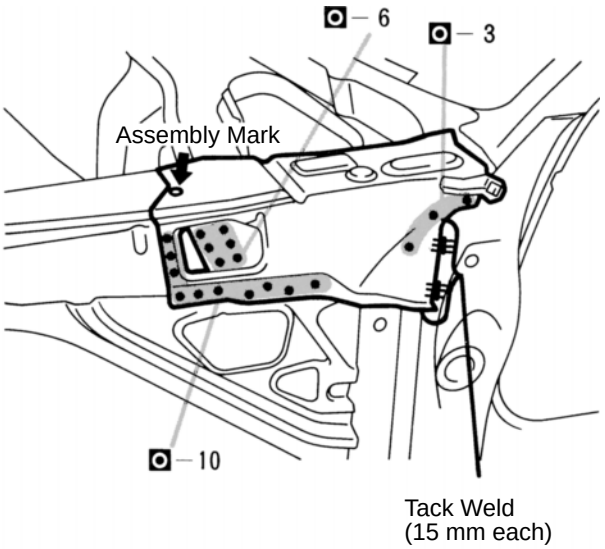

1. When temporarily installing the new parts, determine the installation position by the assembly mark. Then, measure each part in accordance with the body dimension diagram.

mm	in.
15	0.59
20	0.79

FRONT BODY PILLAR (CUT): Normal Roof

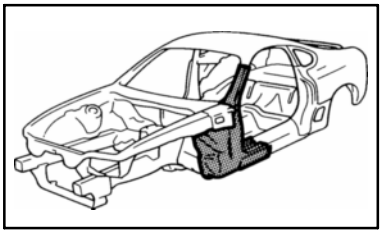

REMOVAL (With the cowl top side panel removed.)

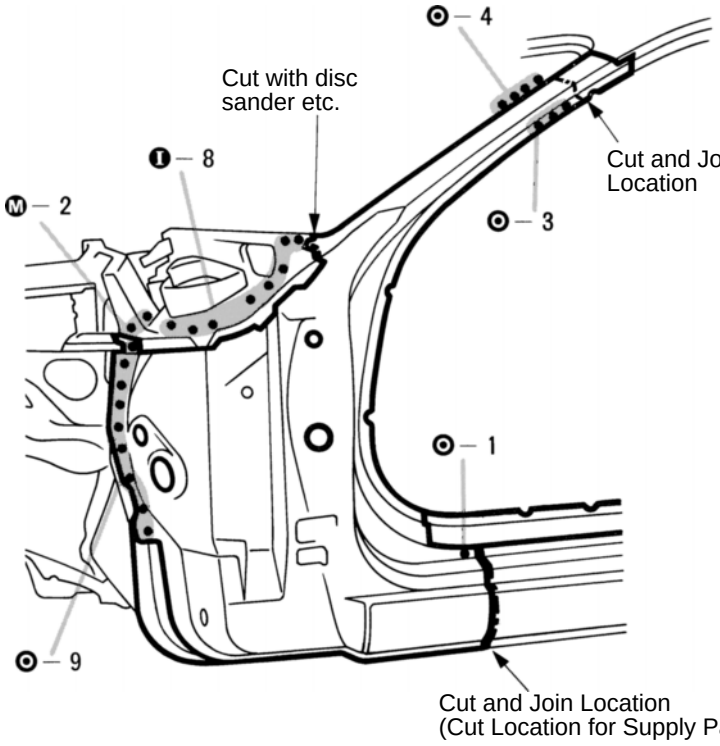

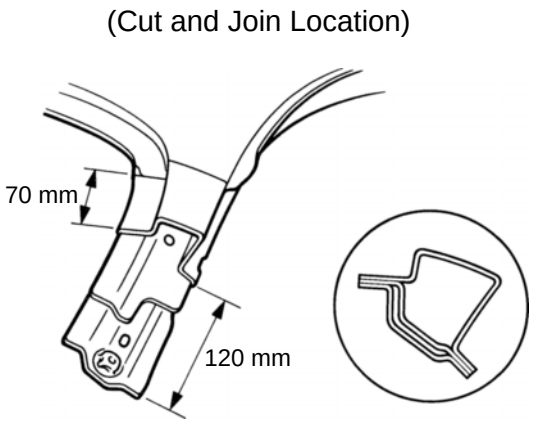

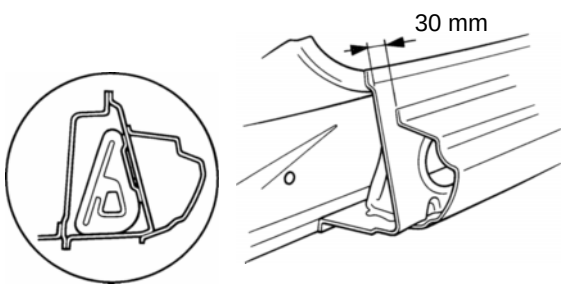

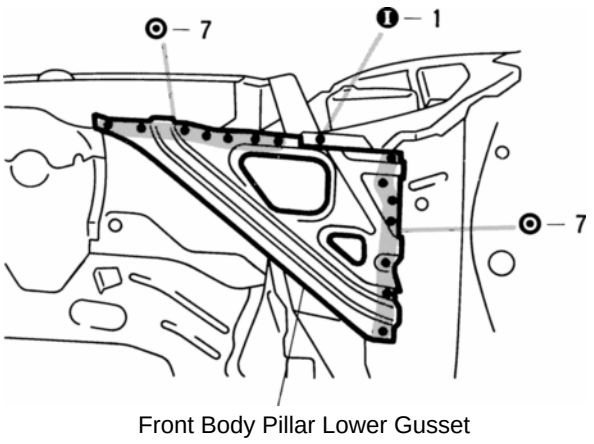

1. Cut and join the parts at the locations shown above.

HINT:

1) Cut the front body pillar outer panel at a 120 mm (4.72in.) offset from the inner panel as shown above right.

2) The cut location of the rocker panel reinforcement is made 30mm (1.18in) to the front of the rocker panel inner cut location, as shown.

2. After removing the front body pillar lower gusset, remove the front body pillar.

mm	in.
30	1.18
70	2.76
120	4.72

REMOVAL (Cont'd)

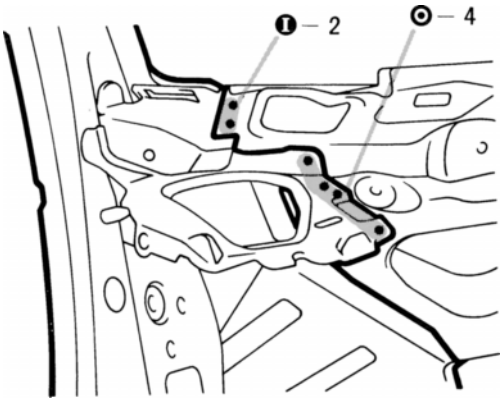

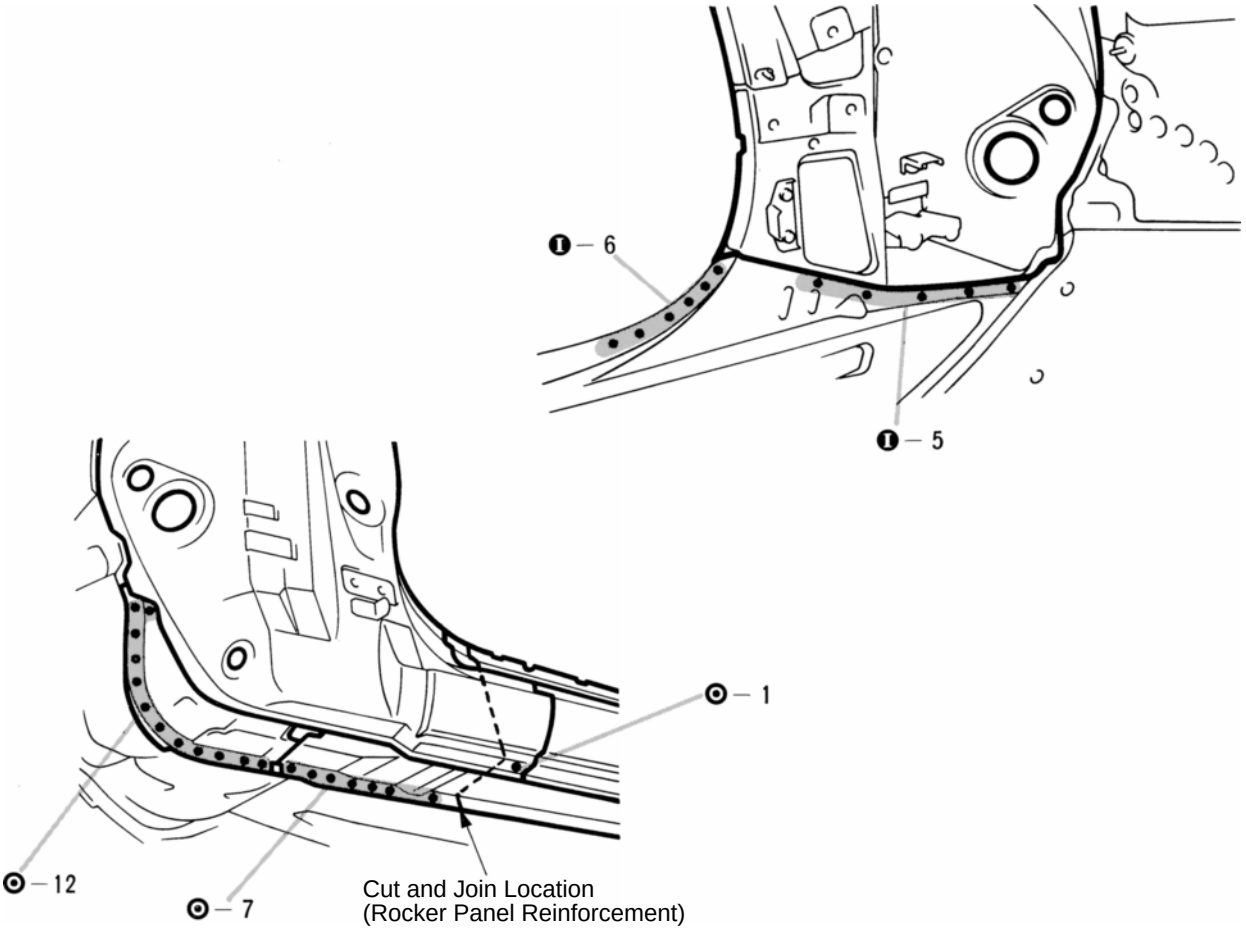

INSTALLATION

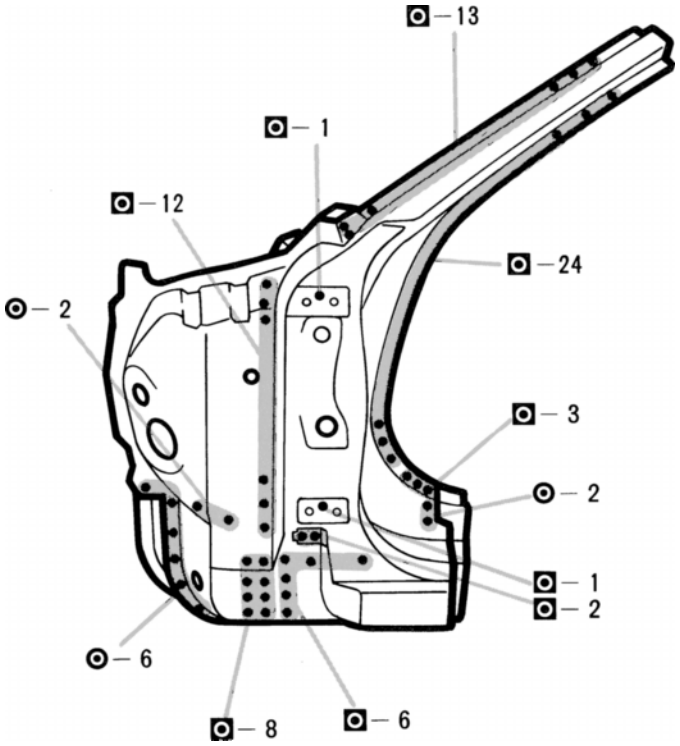

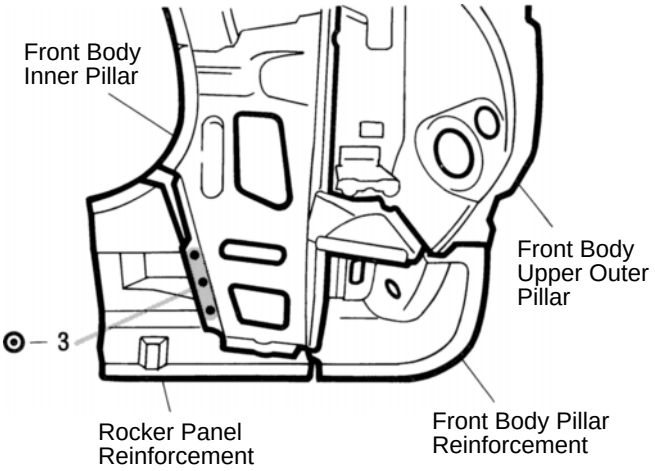

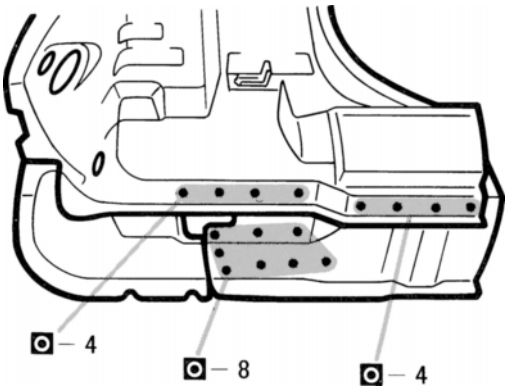

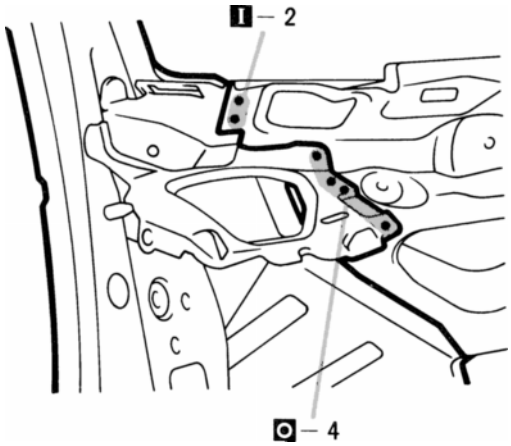

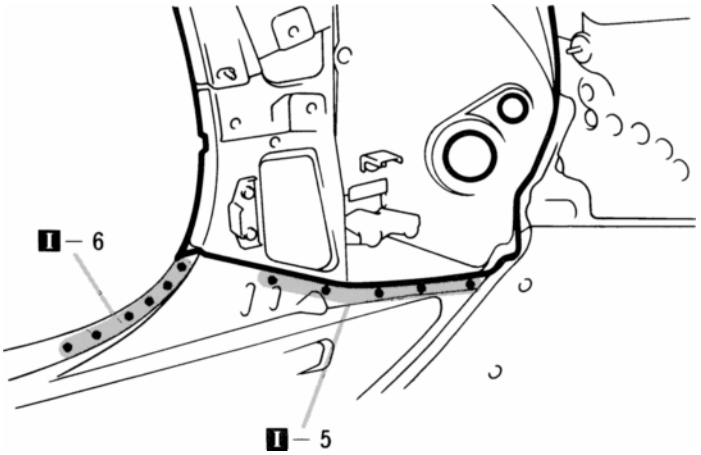

1. Before installing the outer panel inner reinforcement, inner pillar and rocker panel reinforcement, assemble the parts and weld them according to the standard number of welds as shown above.
2. Temporarily install the new parts and measure each part in accordance with the body dimension diagram.

INSTALLATION (Cont'd)

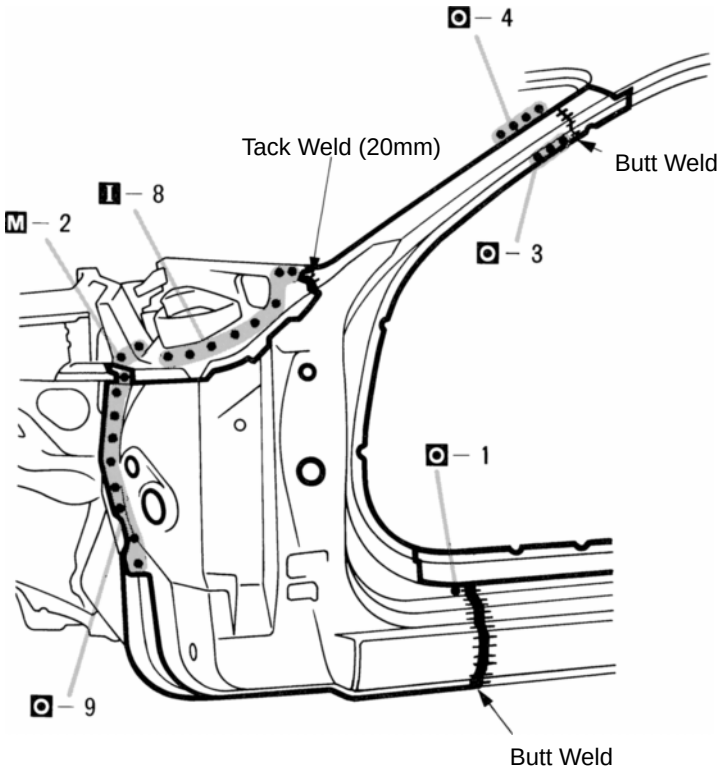

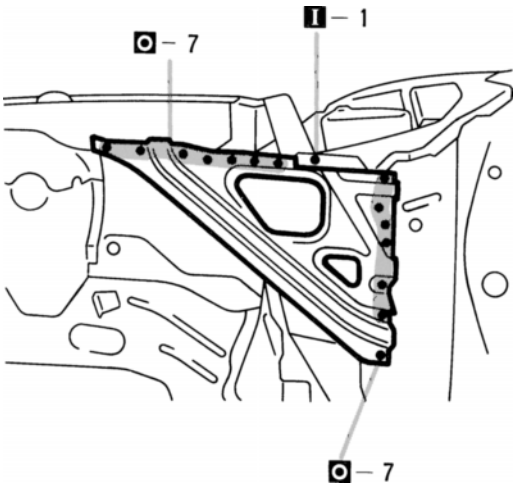

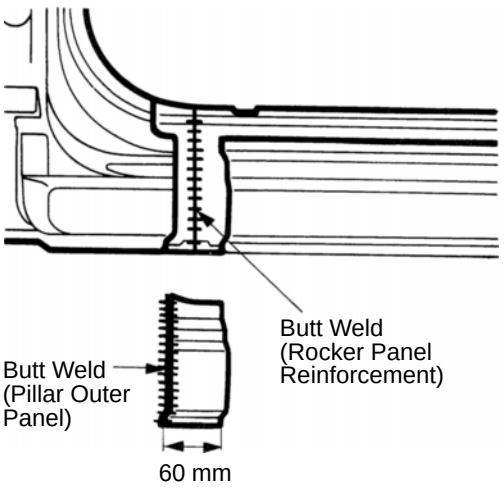

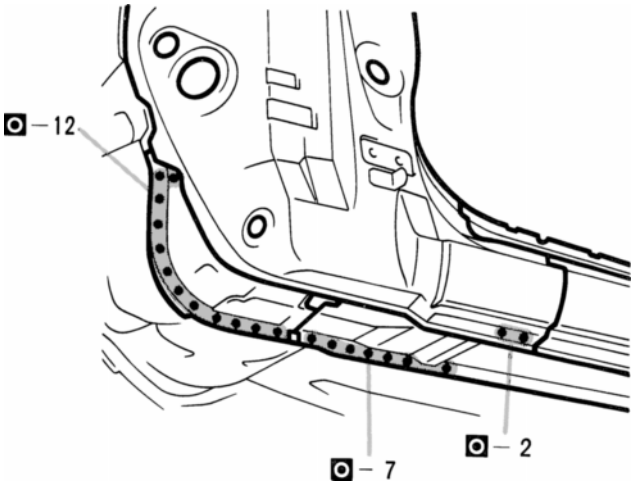

mm	in.
20	0.79
60	2.36

3. Before welding the new parts, check the fit of the front door, front fender and windshield glass.
4. A 60mm (2.36in.) wide access hole should be made in the rocker outer panel. After butt welding the rocker panel reinforcement reattach the rocker outer panel by welding.
5. After installing the new parts, apply foamed material.

HINT: For the formed material application areas, refer to page AP–4.

FRONT BODY PILLAR (CUT): SPORT ROOF

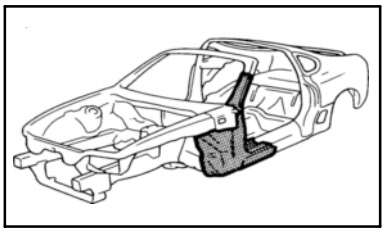

REMOVAL (With the cowl top side panel removed.)

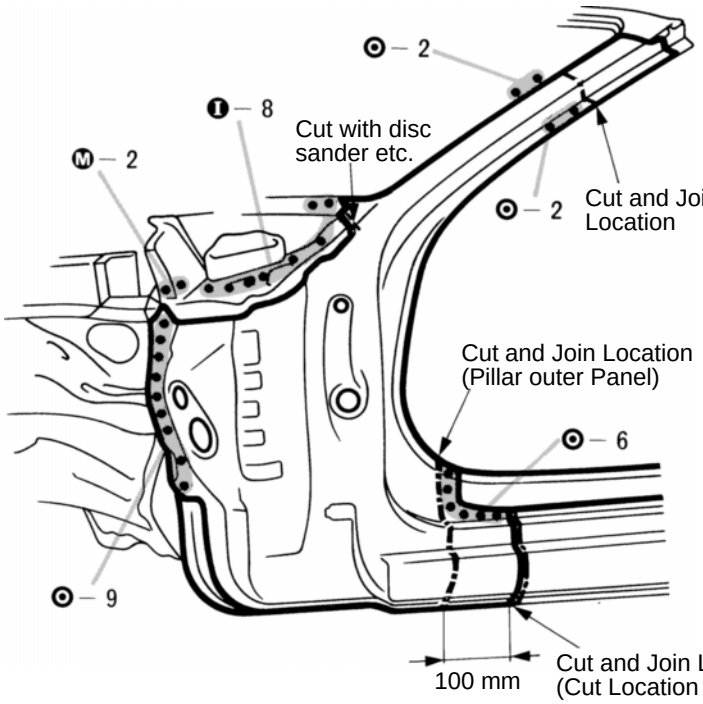

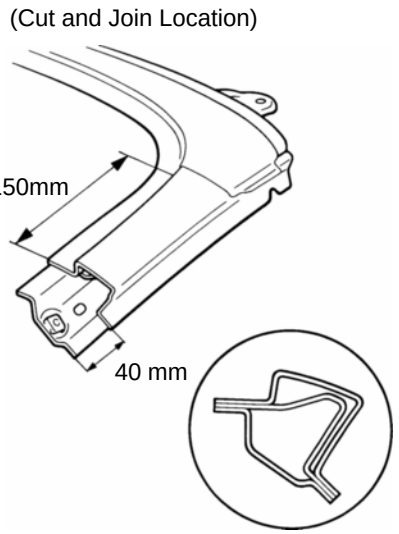

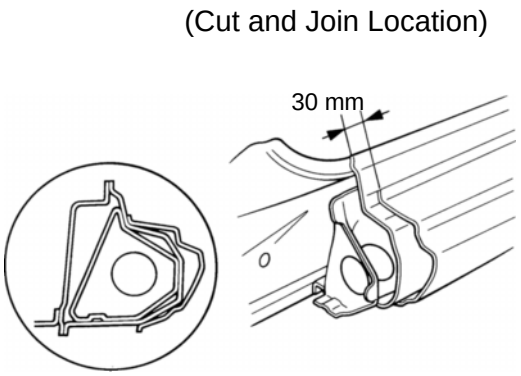

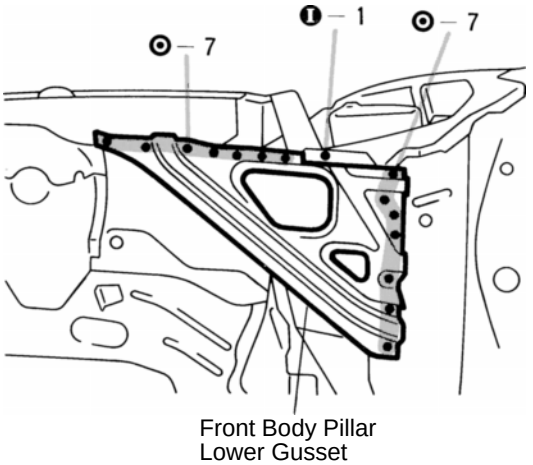

1. Cut and join the part at the locations shown above.

HINT:

1) Cut the front body pillar outer panel at a 40 mm (1.57in.) offset from the inner panel as shown.

2) The cut location of the rocker panel reinforcement is made 30 mm (1.18 in.) to the front of the rocker outer panel cut location, as shown.

2. The rocker panel reinforcement cut location is made 100mm (3.94 in.) to the front of the outer panel cut location, avoid damaging the No. 4 reinforcement.

mm	in.
30	1.18
40	1.57
100	3.94
150	5.91

REMOVAL (Cont'd)

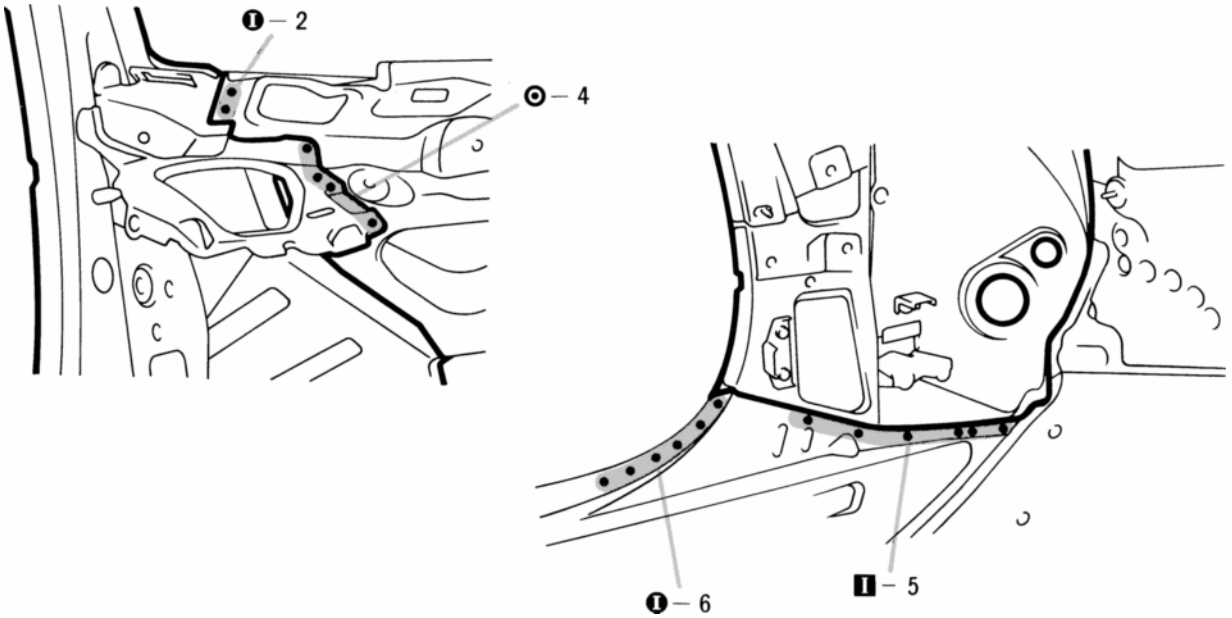

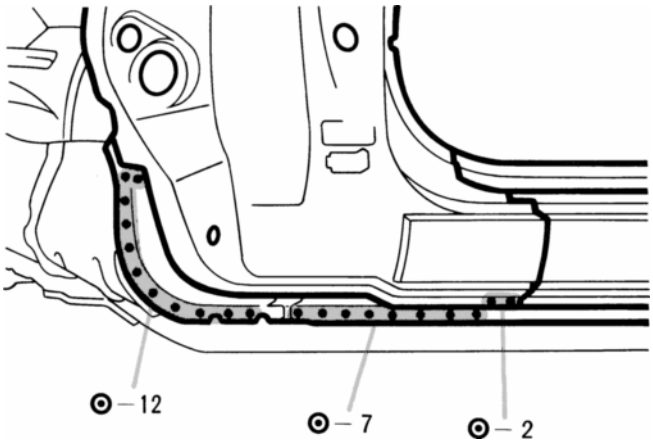

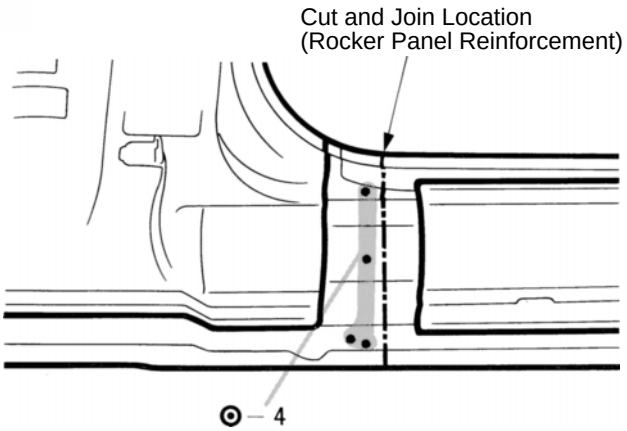

3. After removing the front body pillar lower gusset, remove the front body pillar.

INSTALLATION

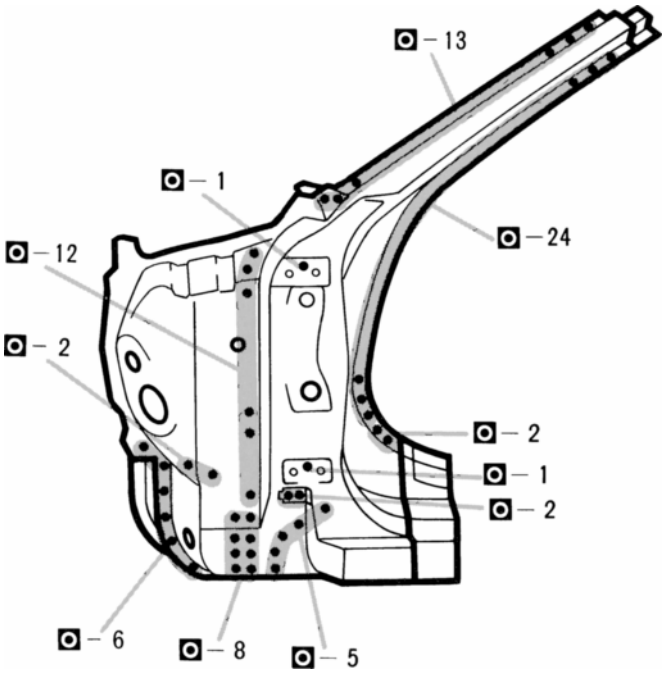

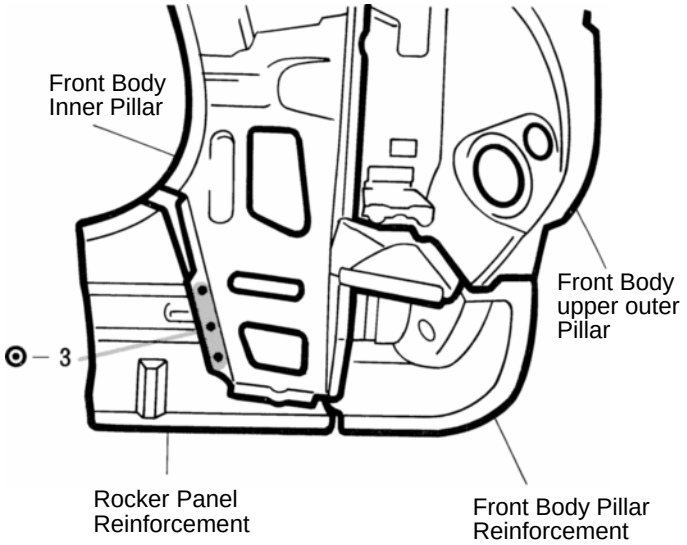

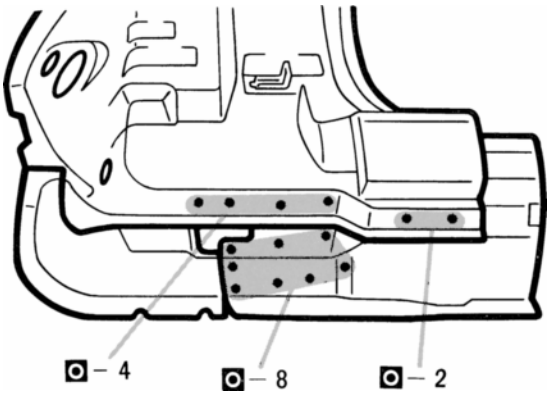

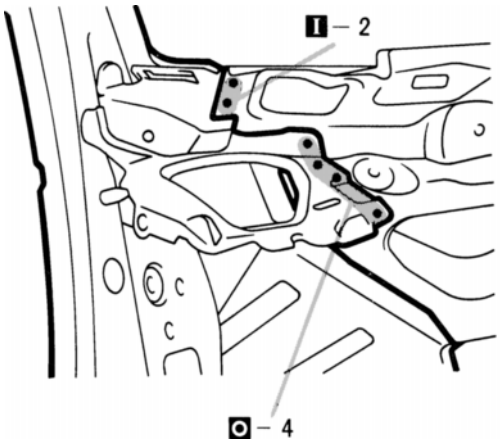

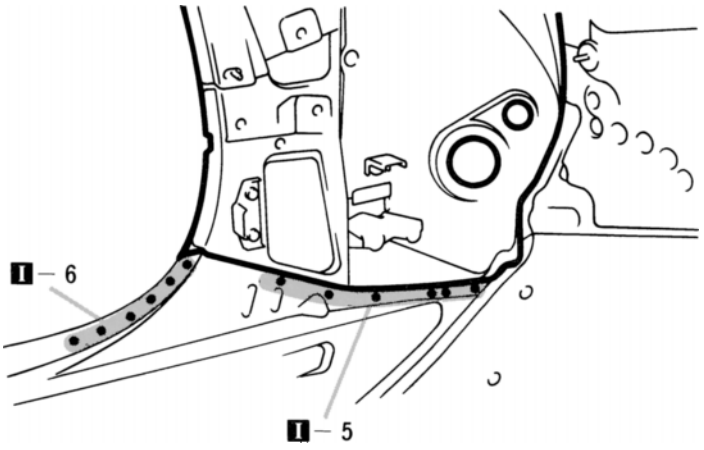

1. Before installing the outer panel, inner reinforcement, inner pillar and rocker panel reinforcement, assemble the parts and weld them according to the standard number of welds as shown above.
2. Temporarily instal the new parts and measure each part in accordance with the body dimension diagram.

INSTALLATION (Cont'd)

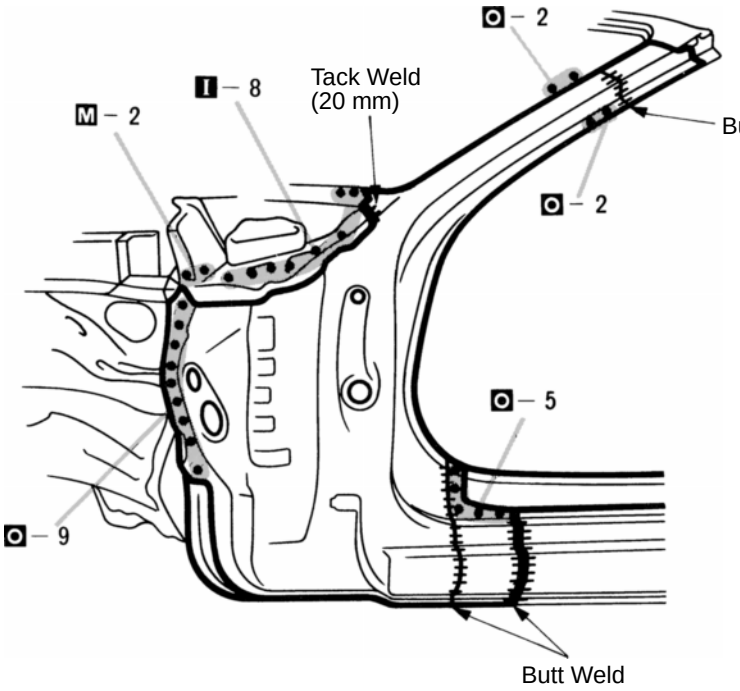

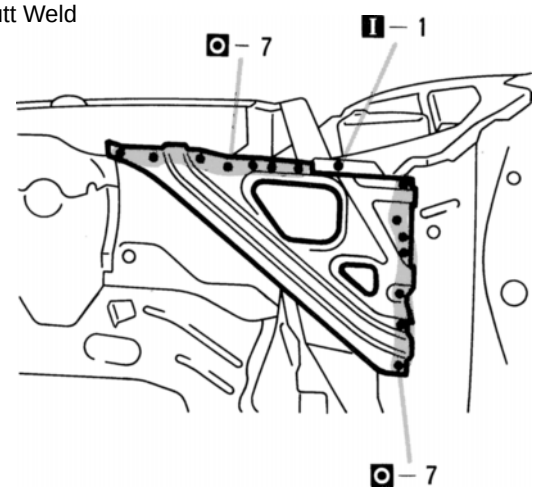

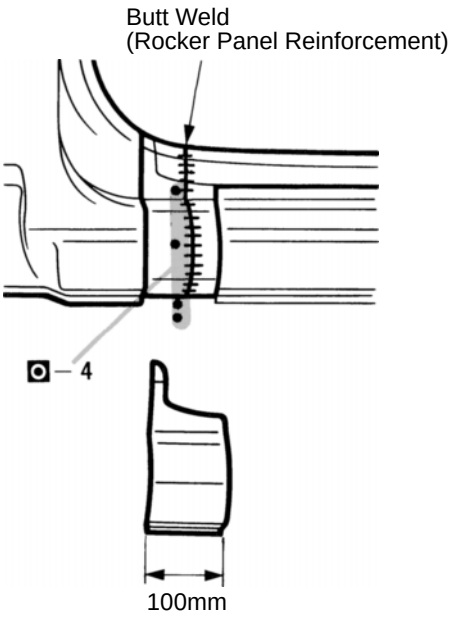

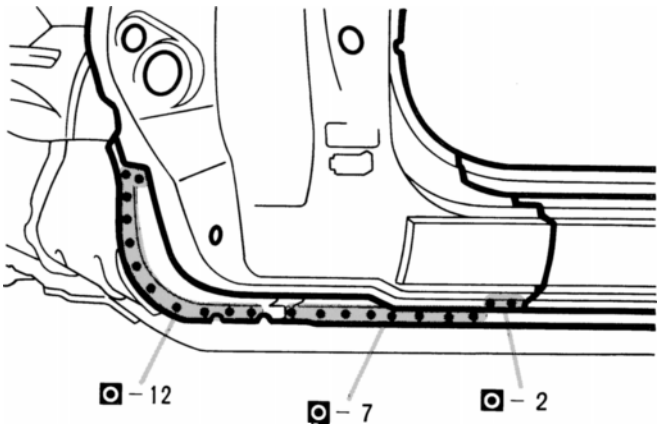

mm	in.
20	0.79
100	3.94

3. Before welding the new parts, check the fit of the front door, front fender and windshield glass.
4. A 100mm (3.94 in.) wide access hole should be made in the rocker outer panel. After butt welding the rocker panel reinforcement, reattach the rocker outer panel by welding.
5. After installing the new parts, apply foamed material.

HINT: For the foamed material application areas, refer to page AP–4.

FRONT DOOR OUTER PANEL (ASSY)

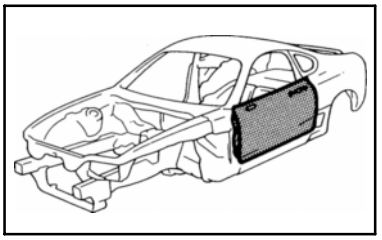

REMOVAL

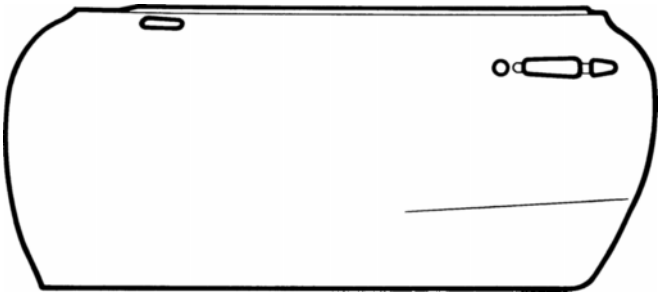

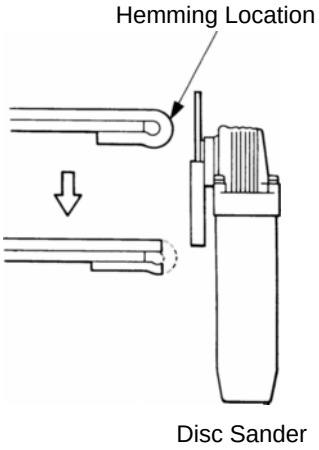

1. After grinding off the hemming location, remove the outer panel.

INSTALLATION

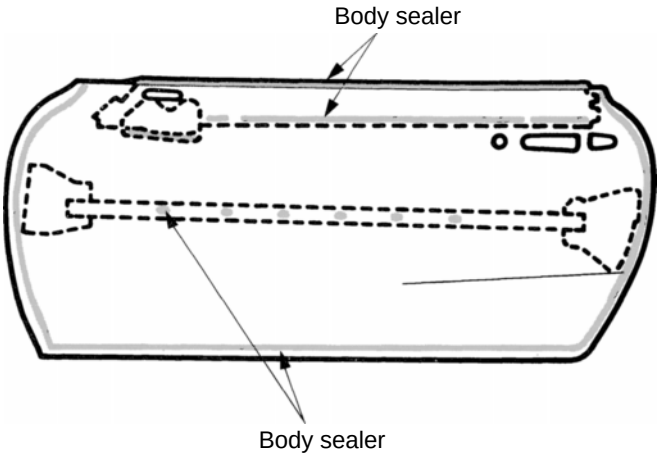

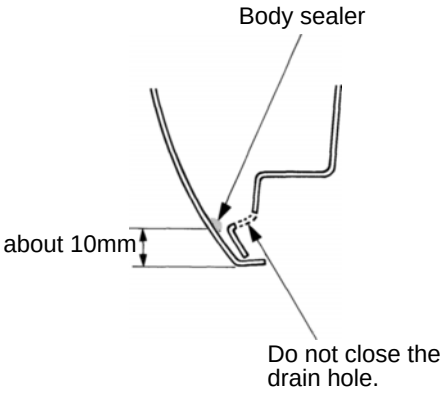

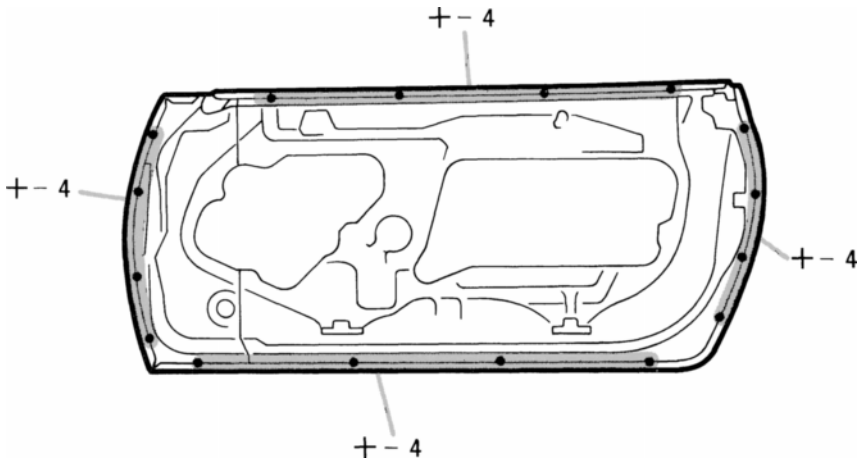

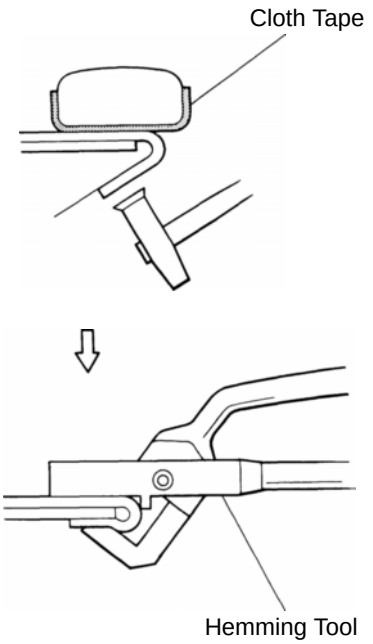

mm	in.
10	0.39

1. Before temporarily installing the new parts, apply body sealer to the reinforcement, side impact protection beam and back side of the new parts.

HINT:

1) Apply just enough sealer for the reinforcement and side impact beam to touch the new panel. Apply sealer evenly around the flange area, about 10 mm (0.39 in.) from the edge, as shown.

2) For other sealing points, refer to section AR.

2. Bend the flange hem about 30˚ with a hammer and dolly, then fasten tightly with a hemming tool.

HINT:

1) Perform hemming in three steps, being careful not to warp the panel.

2) If a hemming tool cannot be used, hem with a hammer and dolly.

ROCKER OUTER PANEL (CUT)

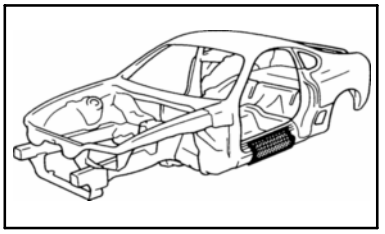

REMOVAL

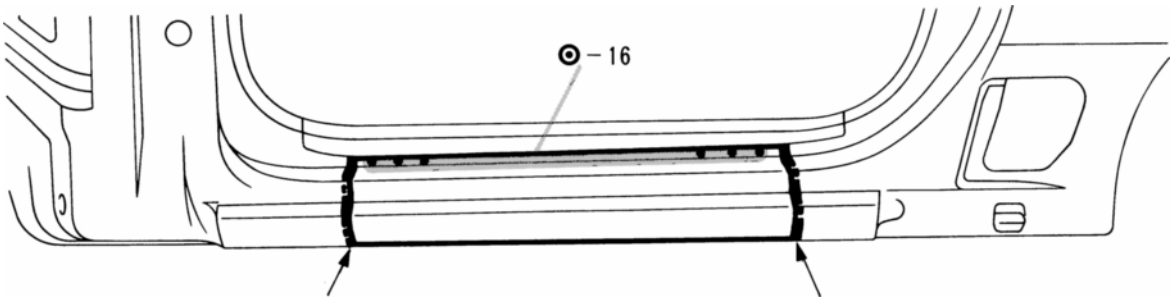

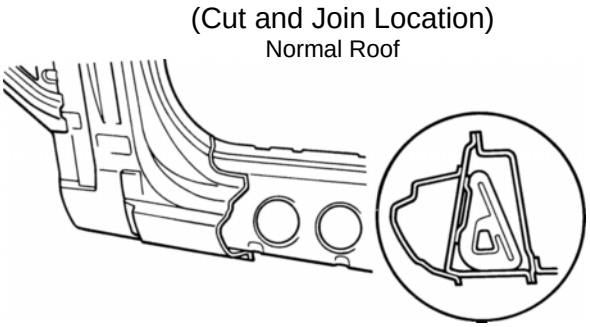

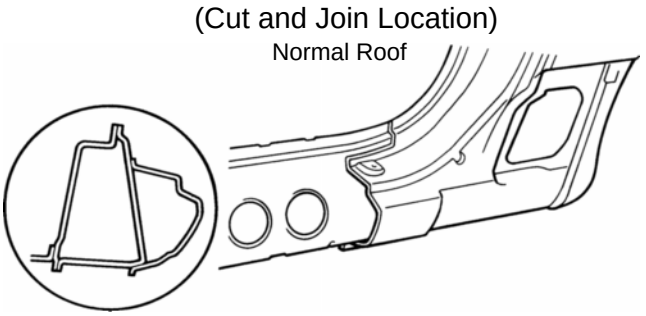

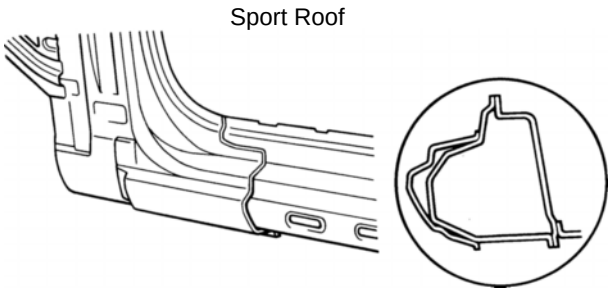

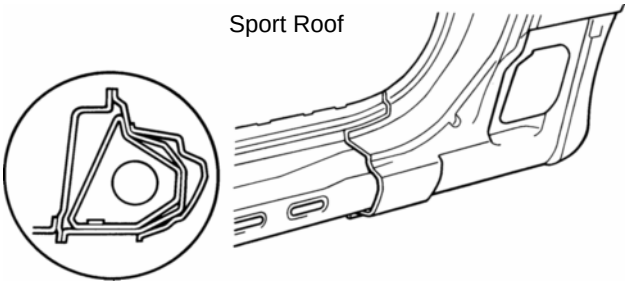

1. Cut and join the parts at the location as shown above.

HINT:

1) Be careful to cut so the rocker panel reinforcement is not damaged.

INSTALLATION

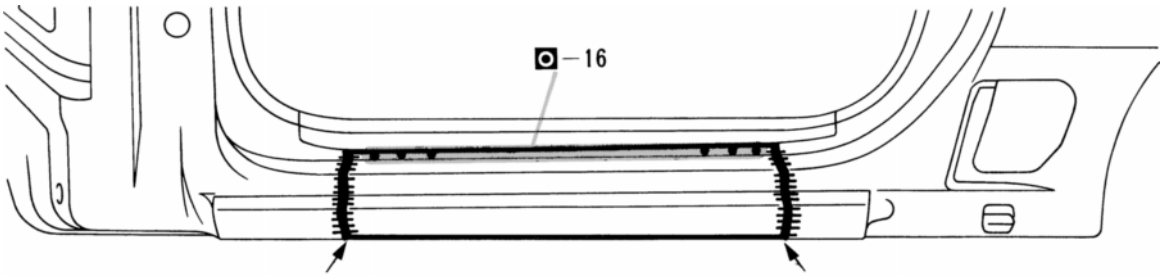

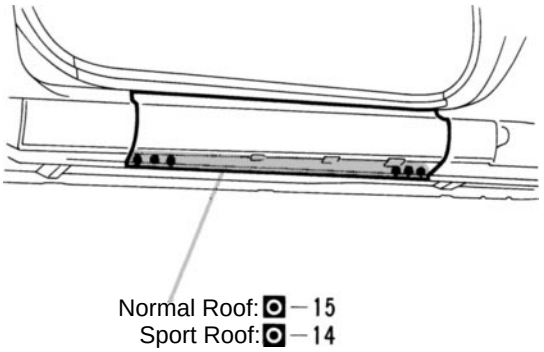

1. Temporarily install the new parts and check the fit of the front door.

QUARTER PANEL (CUT)

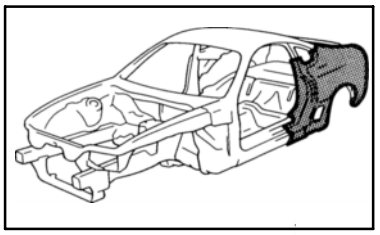

REMOVAL

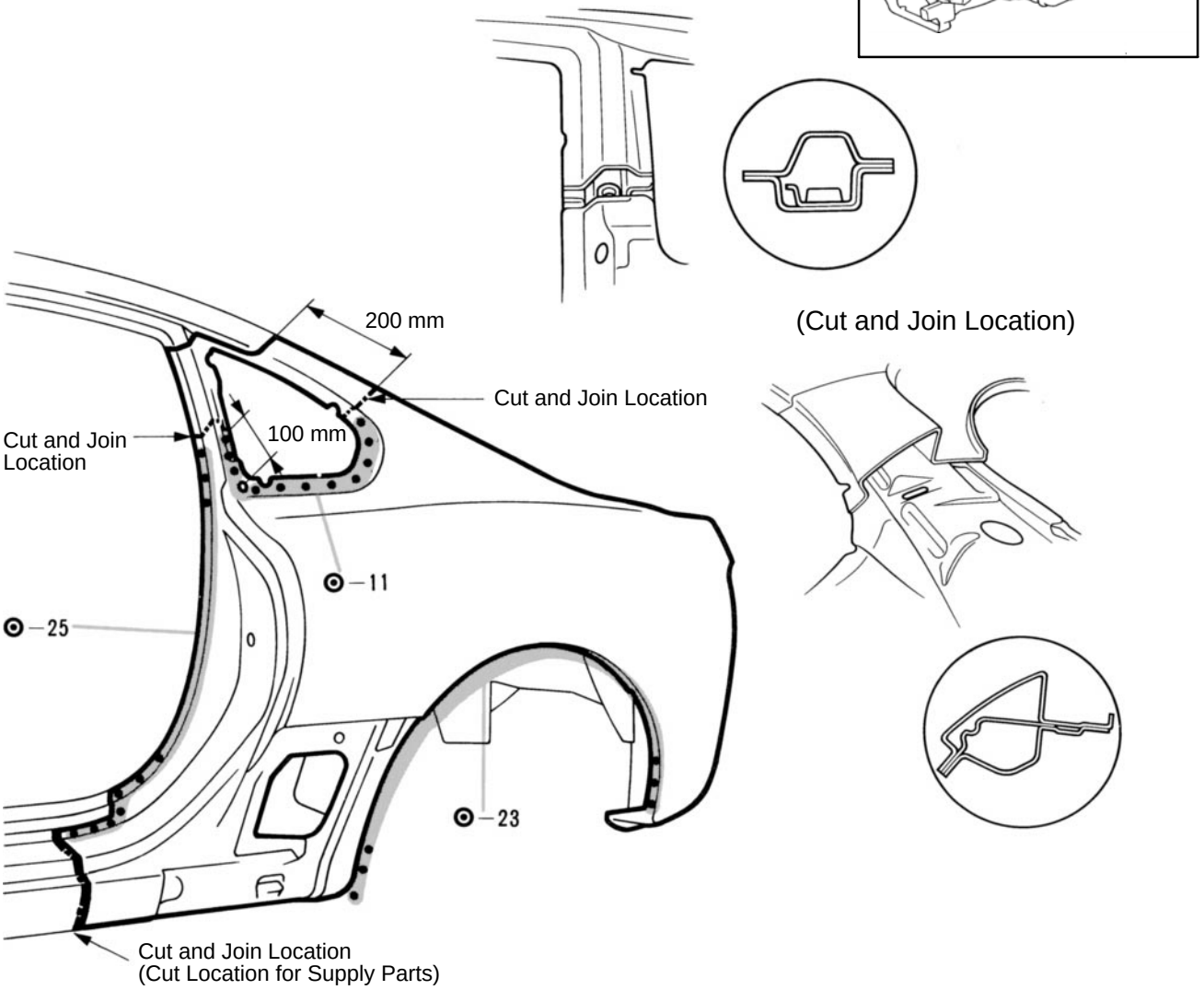

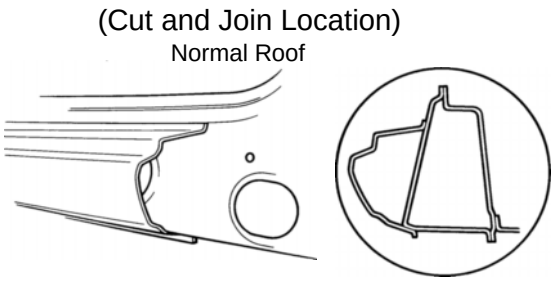

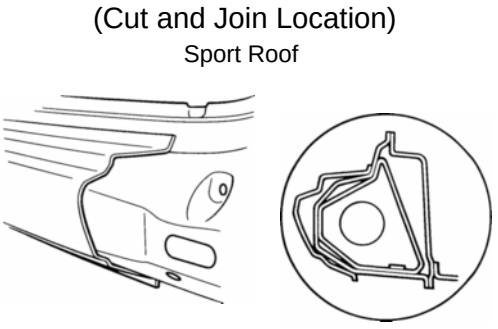

1. Cut and join the parts at the location shown above.

mm	in.
100	3.94
200	7.87

REMOVAL (Cont'd)

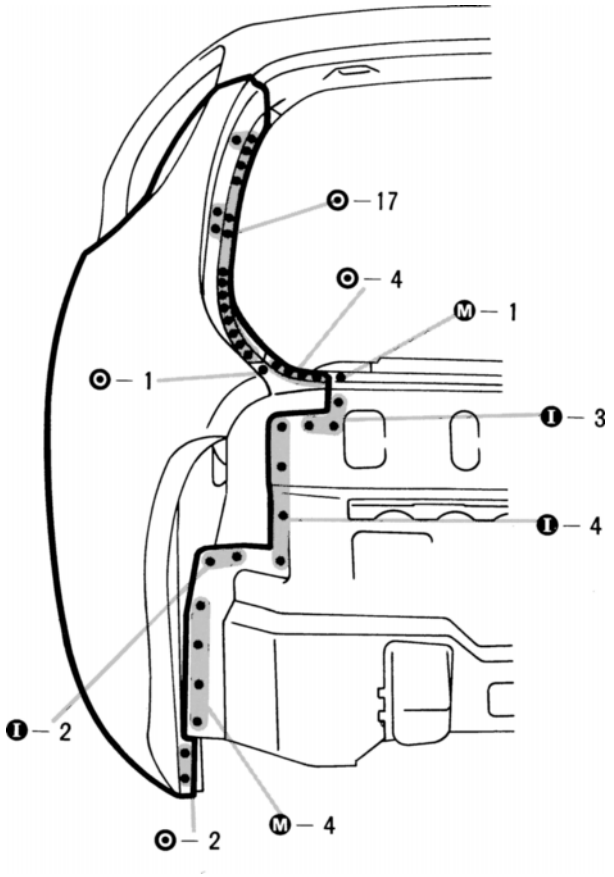

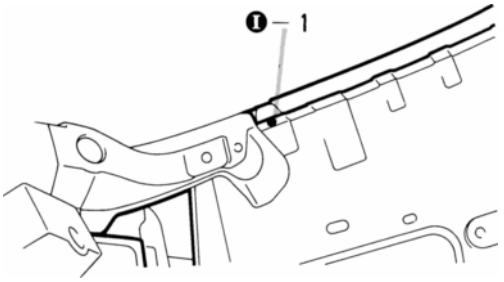

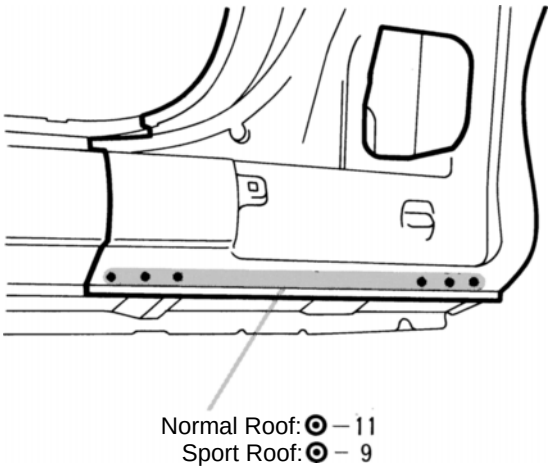

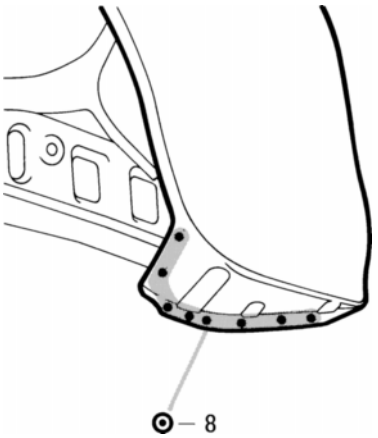

INSTALLATION

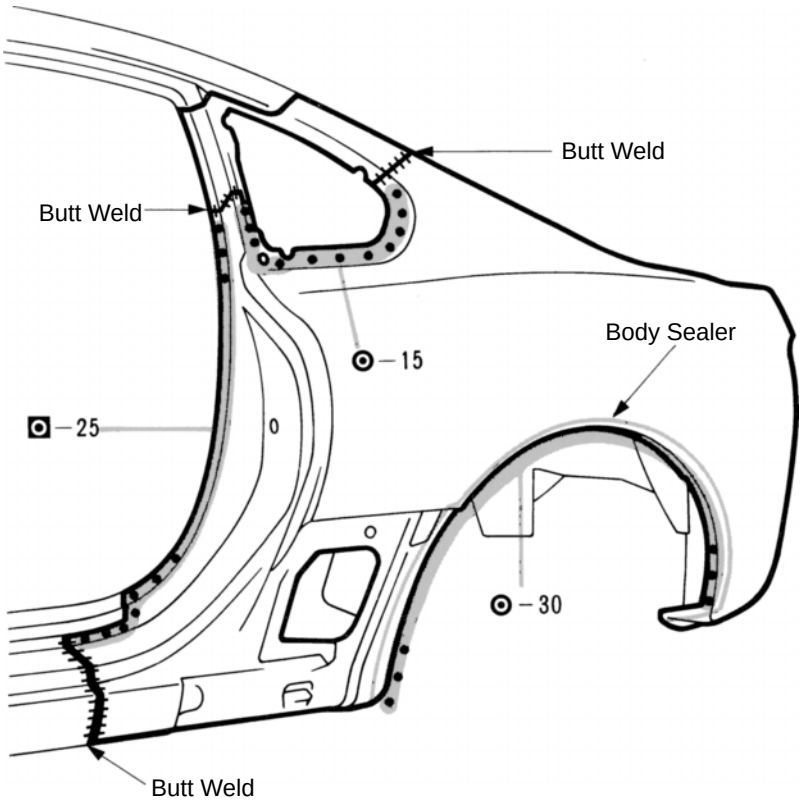

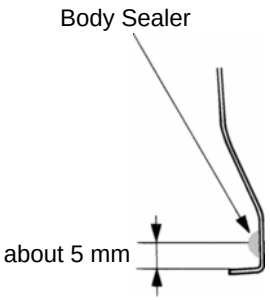

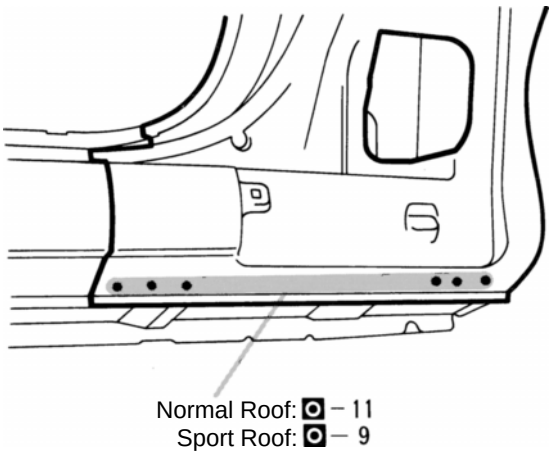

mm	in.
5	0.20

1. Before temporarily installing the new parts, apply body sealer to the wheel arch.

HINT:

1) Apply body sealer about 5 mm (0.20 in.) from the flange, avoiding any oozing.
2) Apply sealer evenly, about 3 – 4 mm (0.12 – 0.16 in.) in diameter.
3) For other sealing points, refer to section AR.

2. Temporarily install the new parts and check the fit of the front door, back door and rear combination lamp.
3. Apply foamed material to the pillar section.

HINT: For the foamed material application areas, refer to page AP–4.

INSTALLATION (Cont'd)

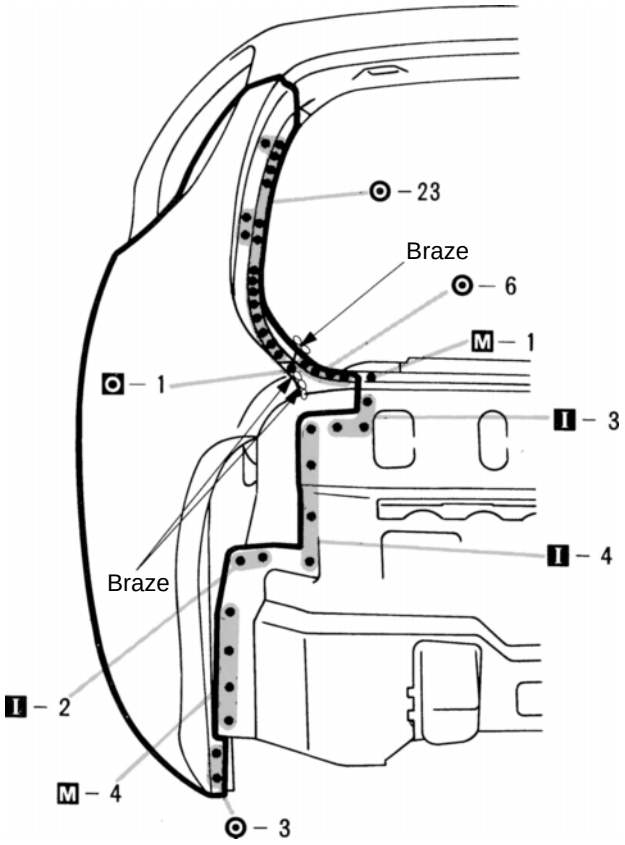

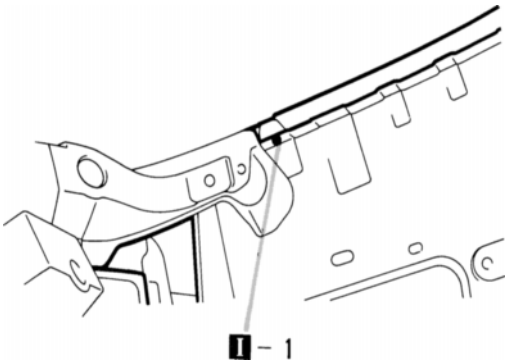

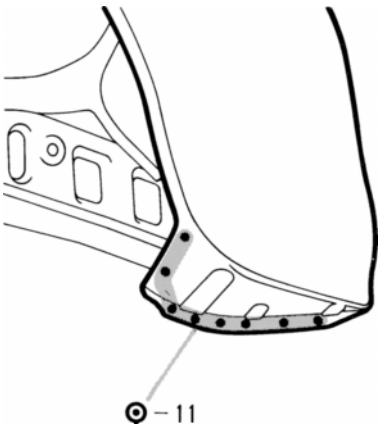

QUARTER PANEL (CUT–P)

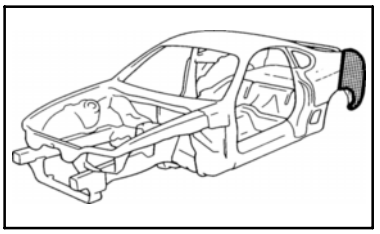

REMOVAL

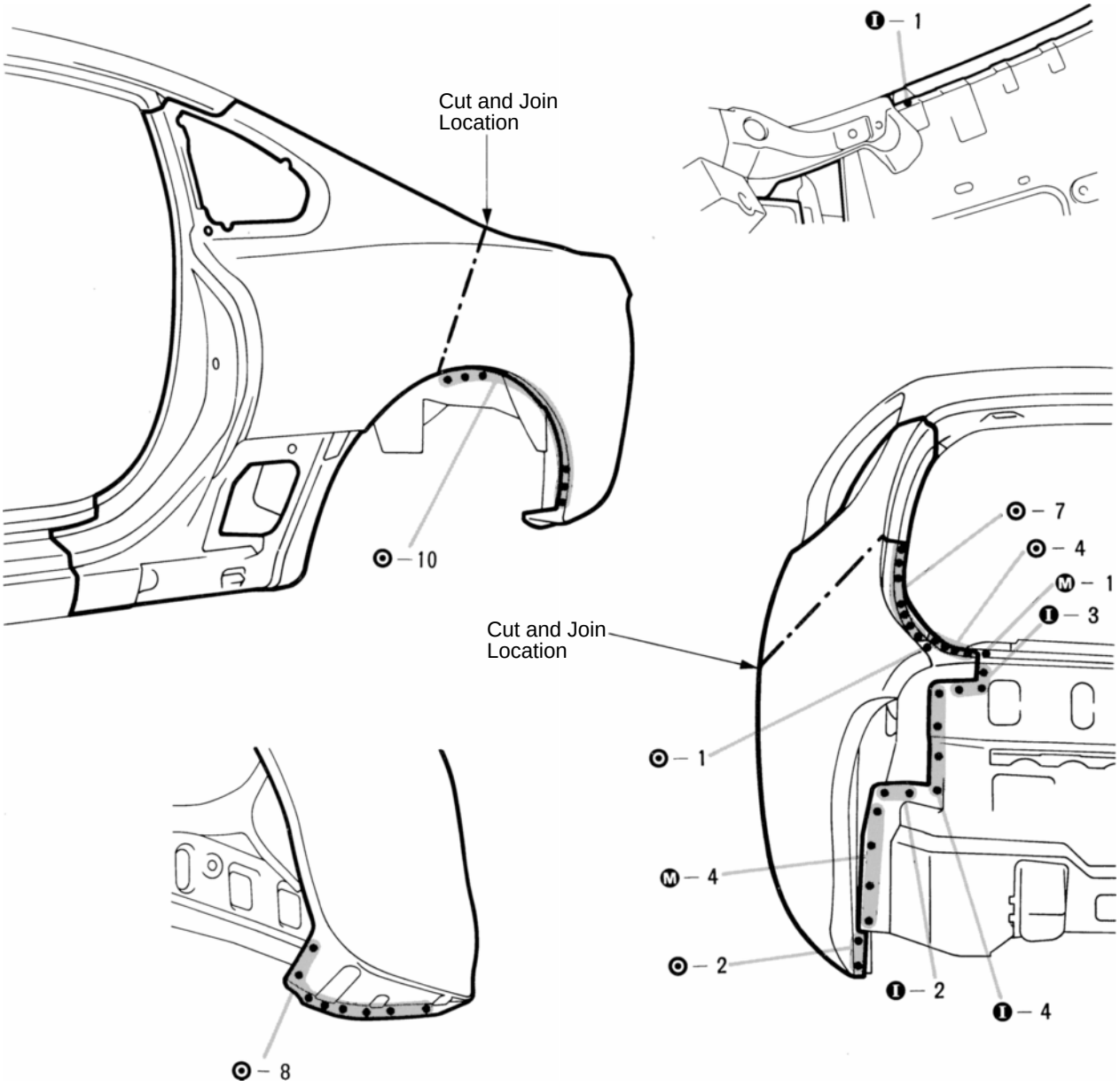

1. Cut and join the parts at the location shown above.

INSTALLATION

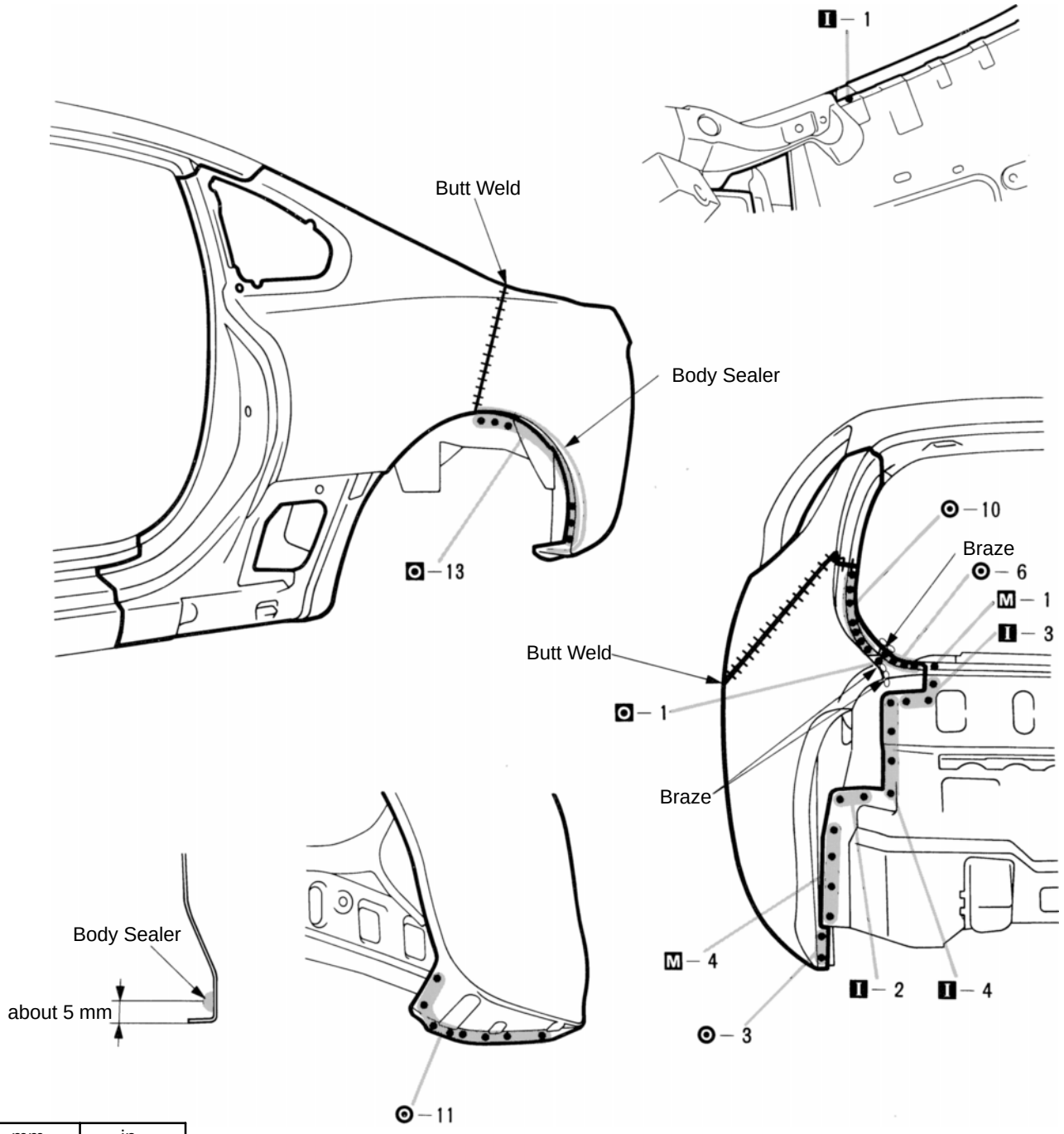

mm	in.
5	0.20

1. Before temporarily installing the new parts, apply body sealer to the wheel arch.

HINT:

1) Apply body sealer about 5 mm (0.20 in.) from the flange, avoiding any oozing.
2) Apply sealer evenly, about 3 – 4 mm (0.12 – 0.16 in.) diameter.
3) For other sealing points, refer to section AR.

2. Temporarily install the new parts and check the fit of the back door and rear combination lamp.
3. Before welding, cut the lining away from the weld seams a little.

QUARTER WHEEL HOUSING OUTER PANEL (ASSY): Normal Roof Right Side

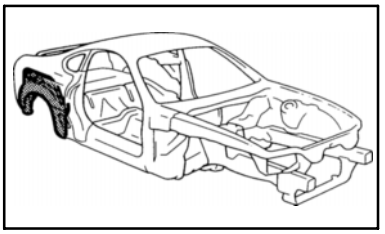

REMOVAL (With the quarter panel removed.)

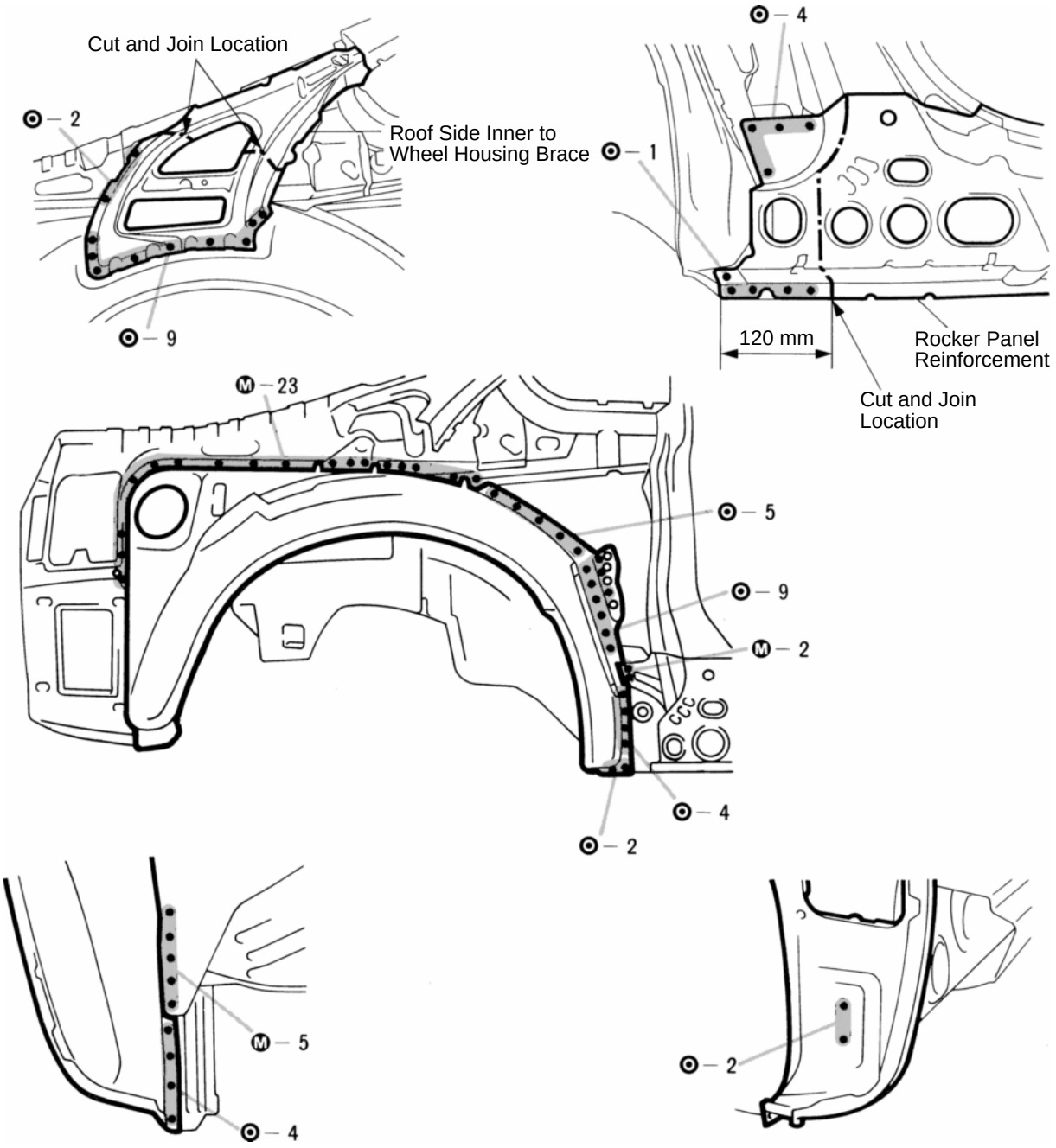

1. Cut the roof side inner to wheel housing brace and the rocker panel reinforcement end at the locations noted above. Remove the quarter wheel housing outer panel.

mm	in.
120	4.72

INSTALLATION

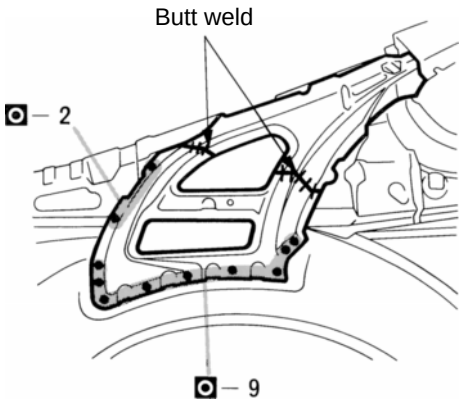

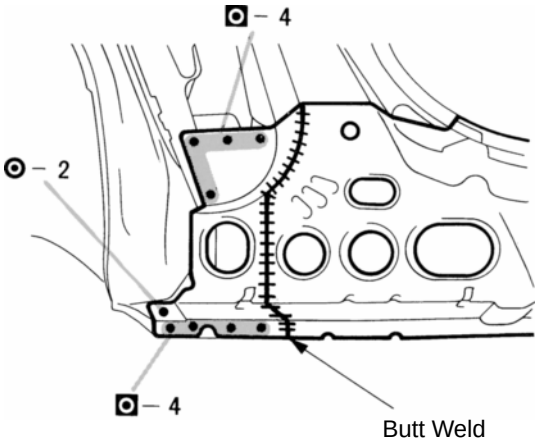

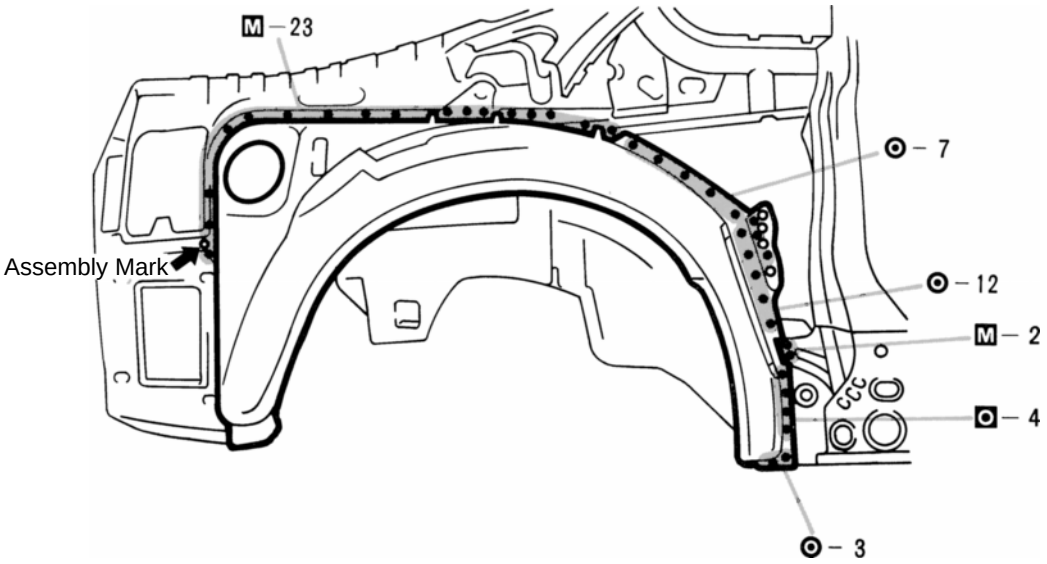

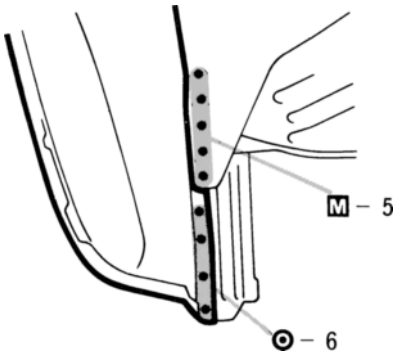

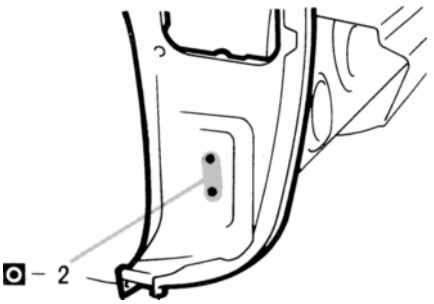

1. Determine the position of the new parts by the assembly marks of the inner and outer panels.

QUARTER WHEEL HOUSING OUTER PANEL (ASSY): Normal Roof Left Side

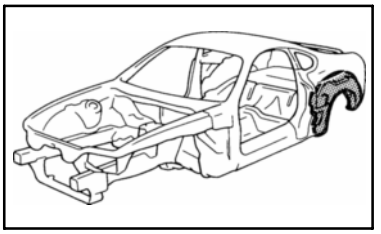

REMOVAL (With the quarter panel removed.)

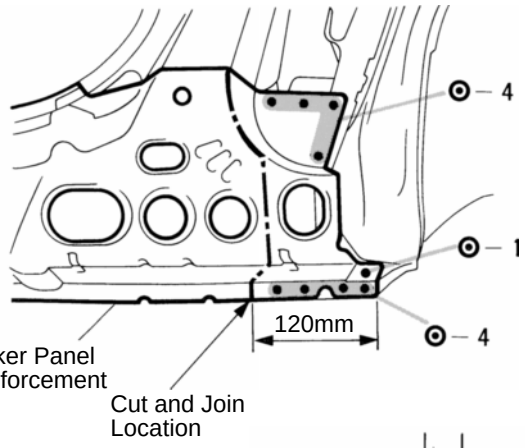

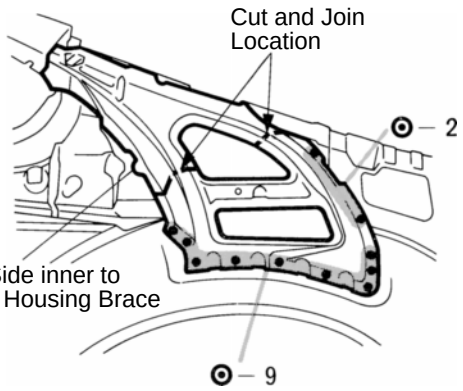

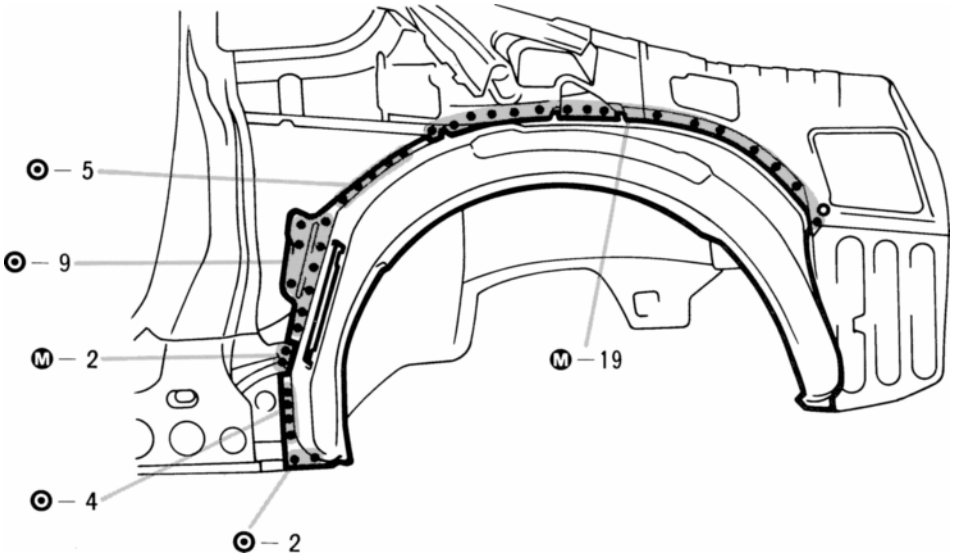

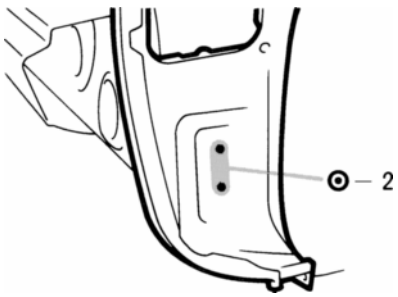

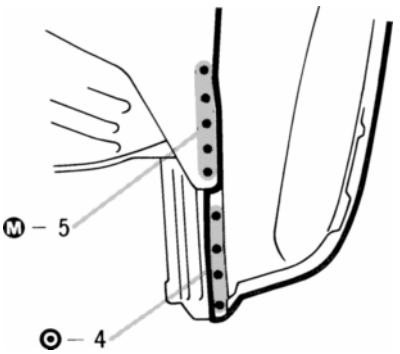

1. Cut the roof side inner to wheel housing brace and the rocker panel reinforcement end at locations shown above. Remove the quarter wheel housing outer panel.

mm	in.
120	4.72

INSTALLATION

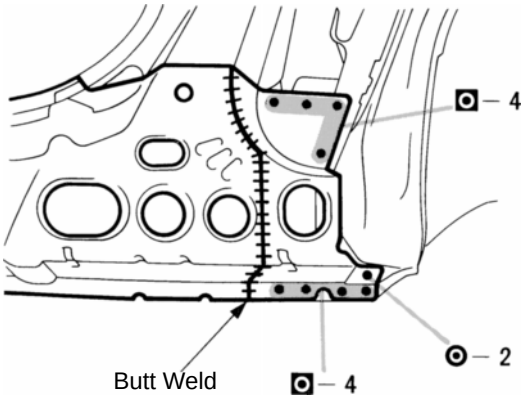

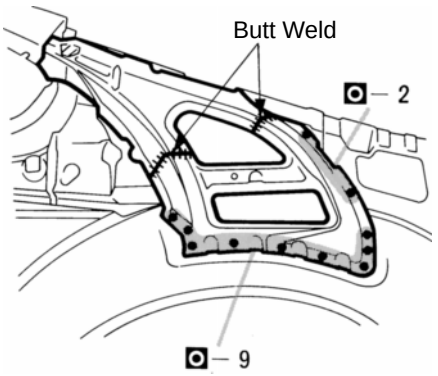

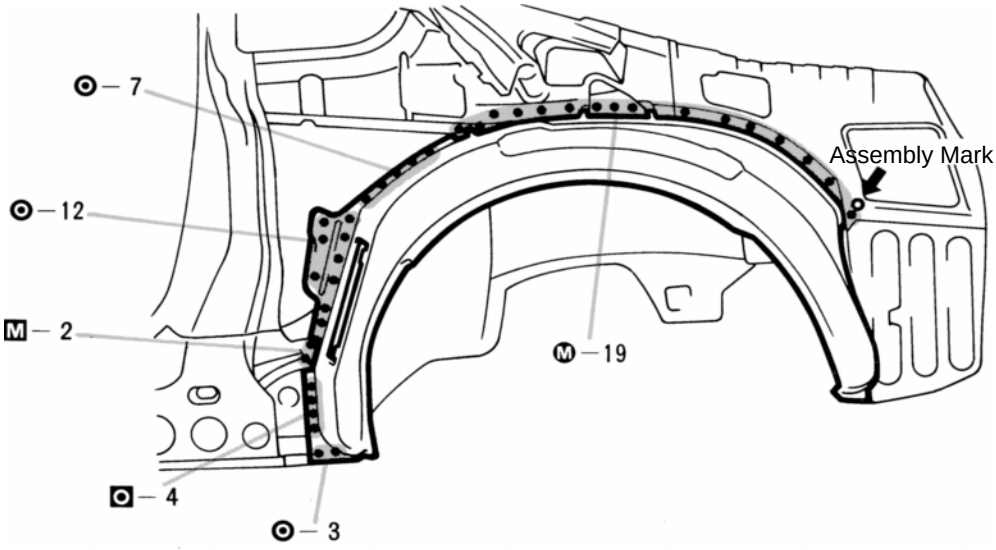

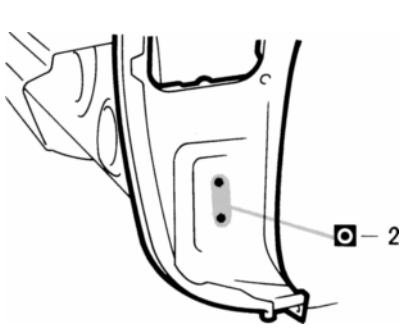

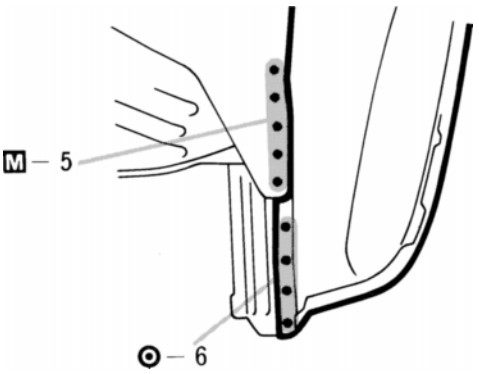

1. Determine the position of the new parts by the assembly marks of the inner and outer panels.

QUARTER WHEEL HOUSING OUTER PANEL (ASSY): Sport Roof Right Side

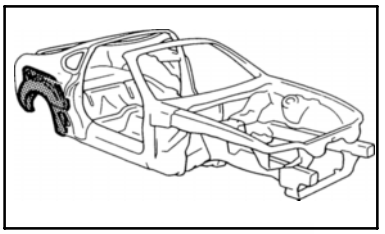

REMOVAL (With the quarter panel removed.)

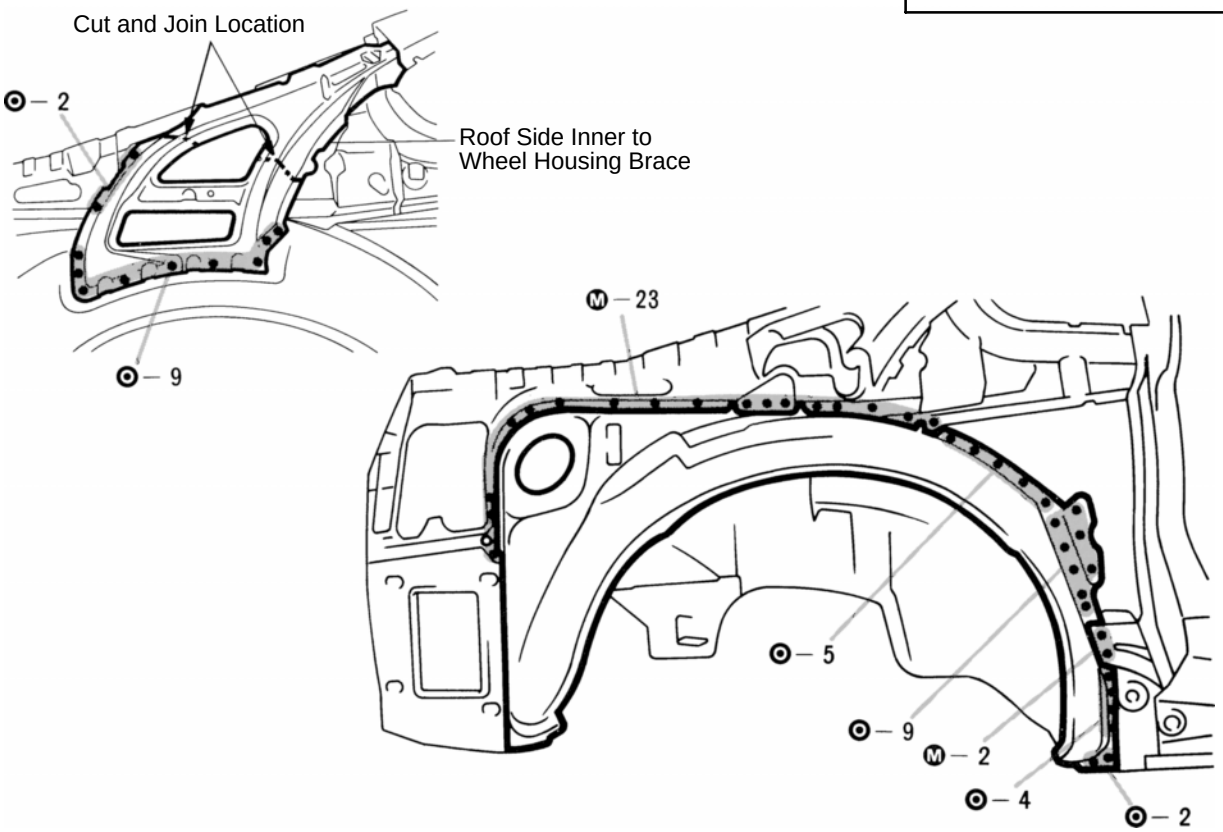

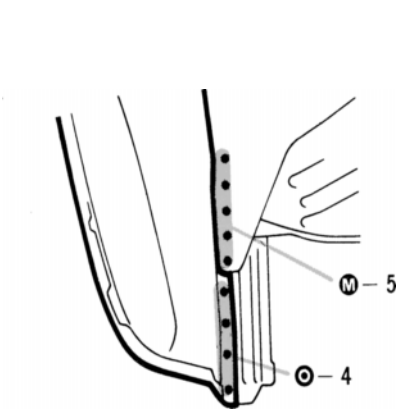

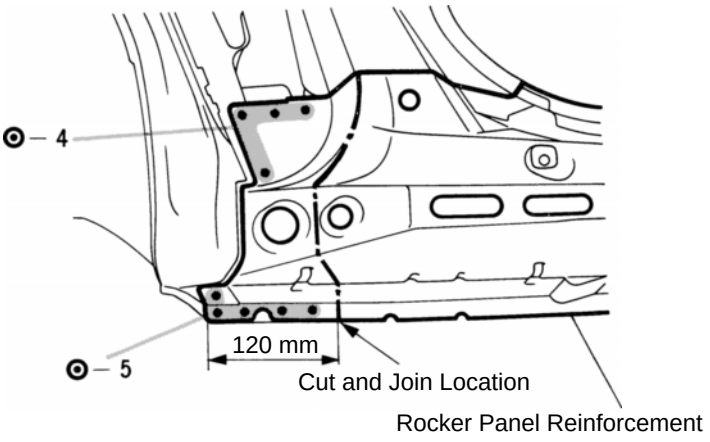

1. Cut the roof side inner to wheel housing brace and the rocker panel reinforcement end at the locations shown above. Remove the quarter wheel housing outer panel.

mm	in.
120	4.72

INSTALLATION

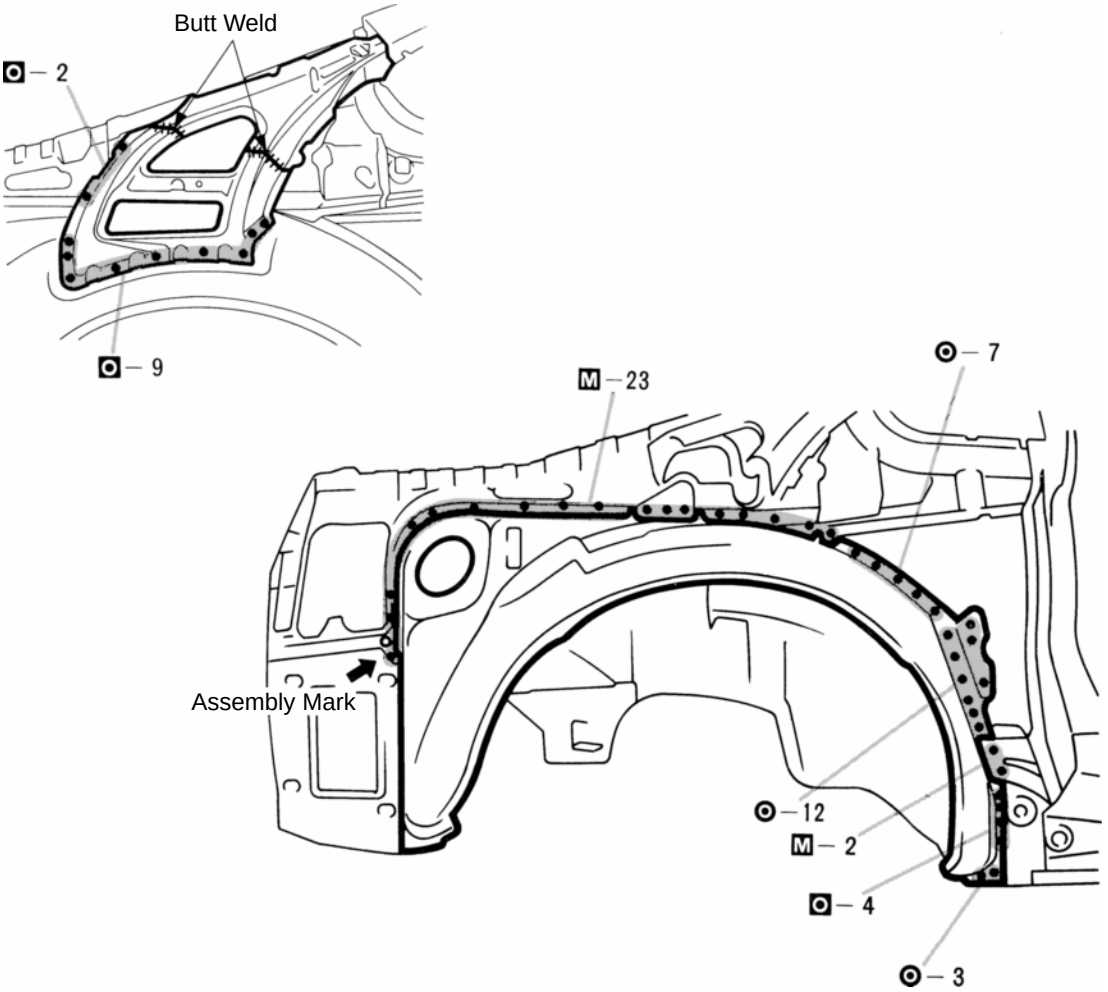

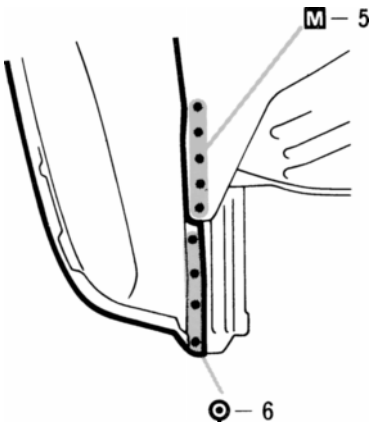

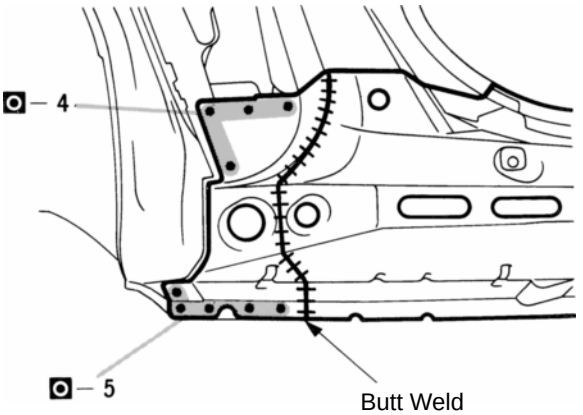

1. Determine the position of the new parts by the assembly marks of the inner and outer panels.

QUARTER WHEEL HOUSING OUTER PANEL (ASSY): Sport Roof Left Side

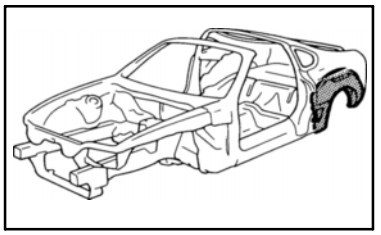

REMOVAL (With the quarter panel removed.)

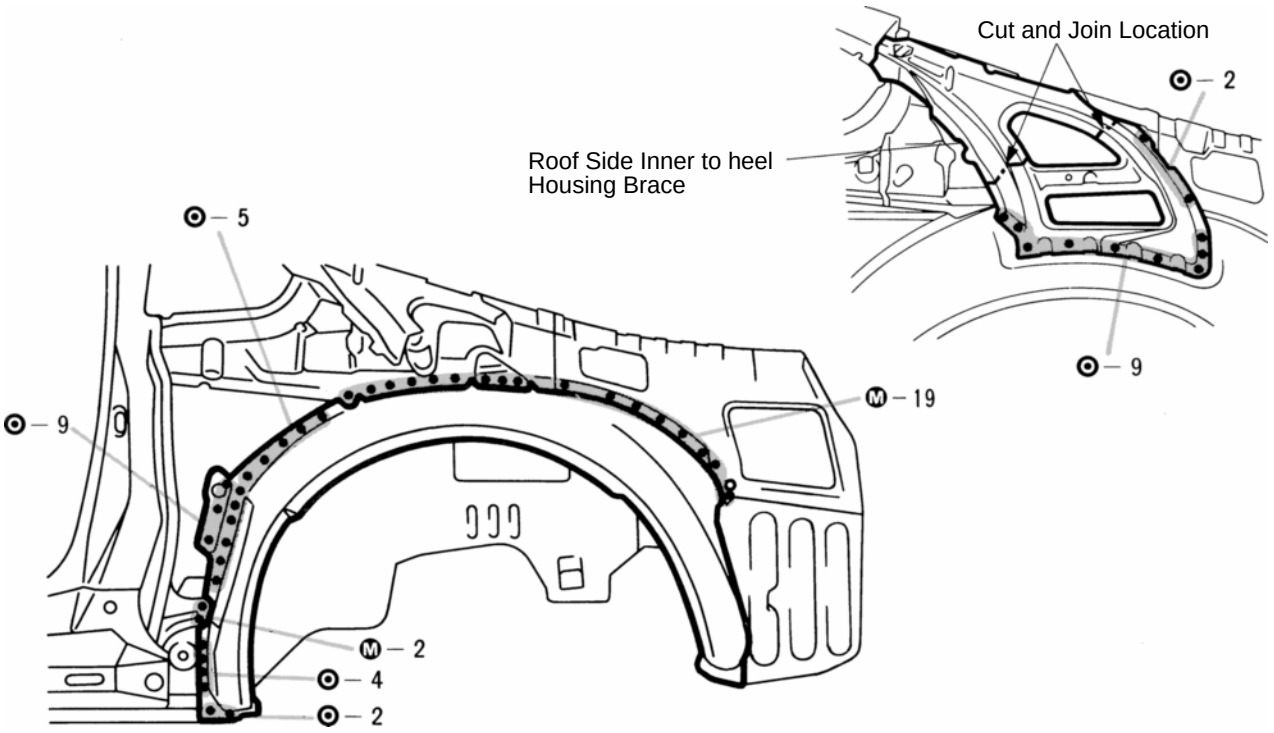

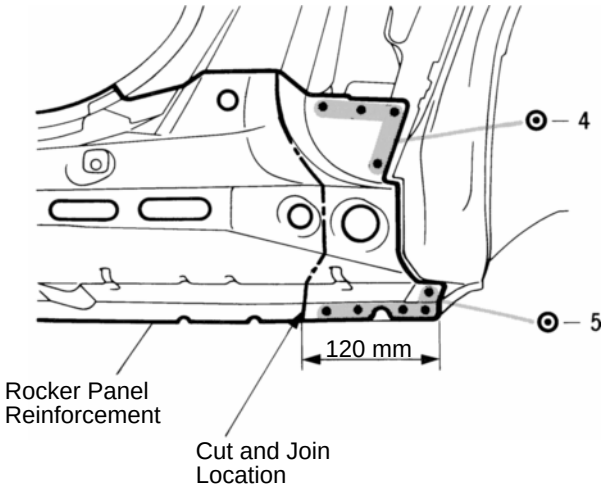

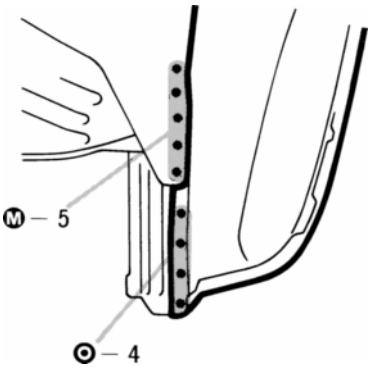

1. Cut the roof side inner to wheel housing brace and the rocker panel reinforcement end at the location shown above. Remove the quarter wheel housing outer panel.

mm	in.
120	4.72

INSTALLATION

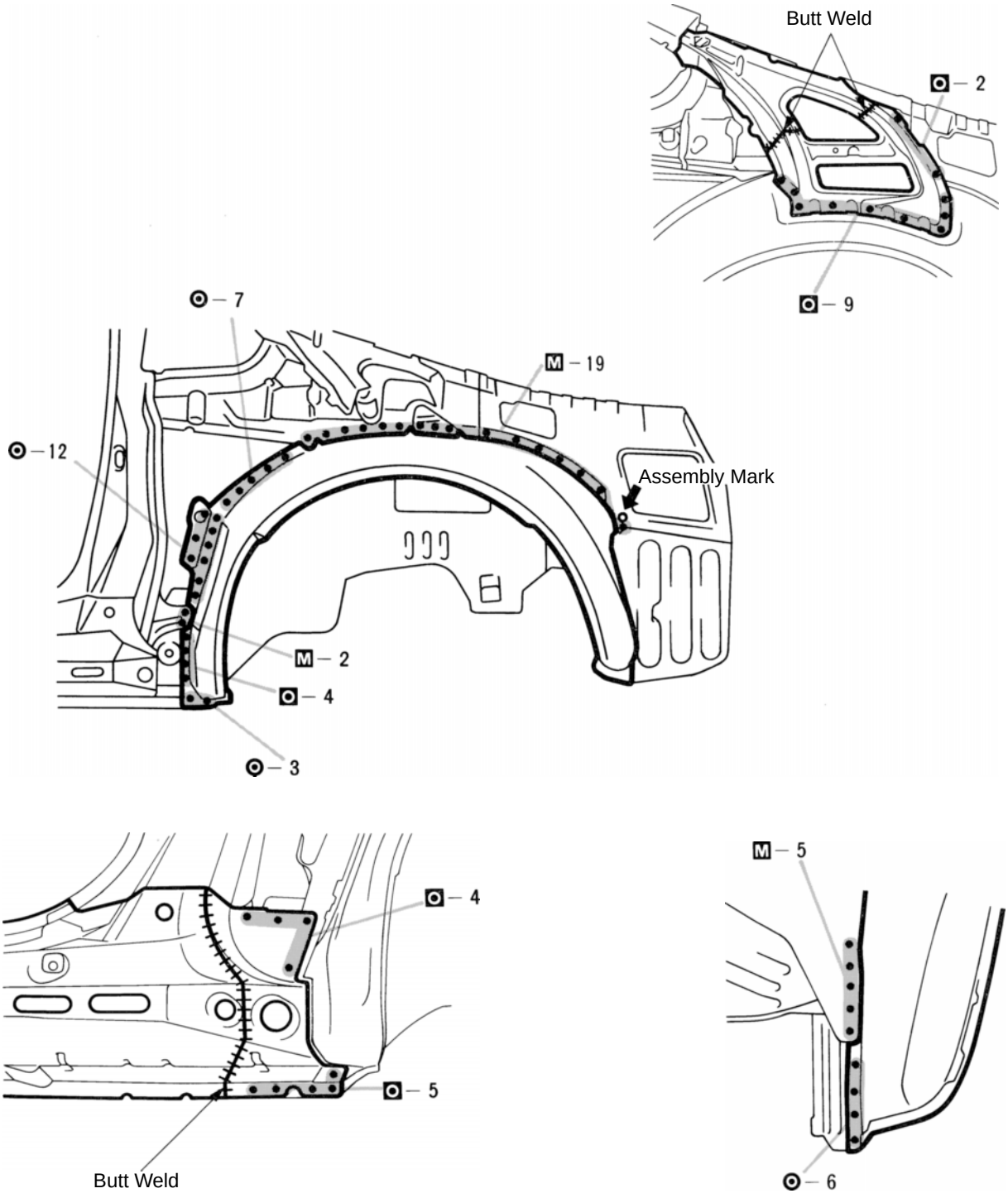

1. Determine the position of the new parts by the assembly marks of the inner and outer panels.

BODY LOWER BACK PANEL (ASSY)

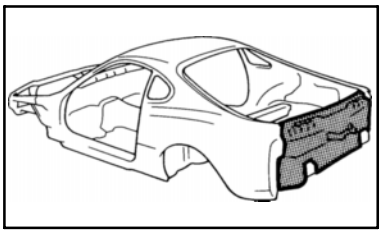

REMOVAL

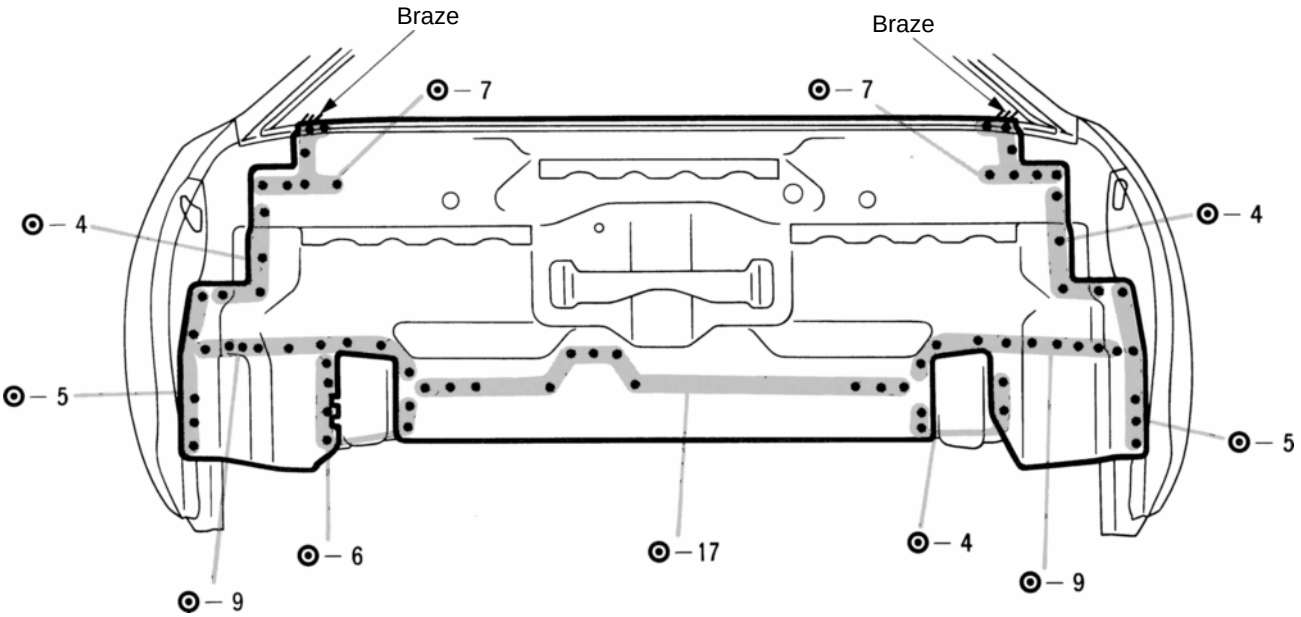

INSTALLATION

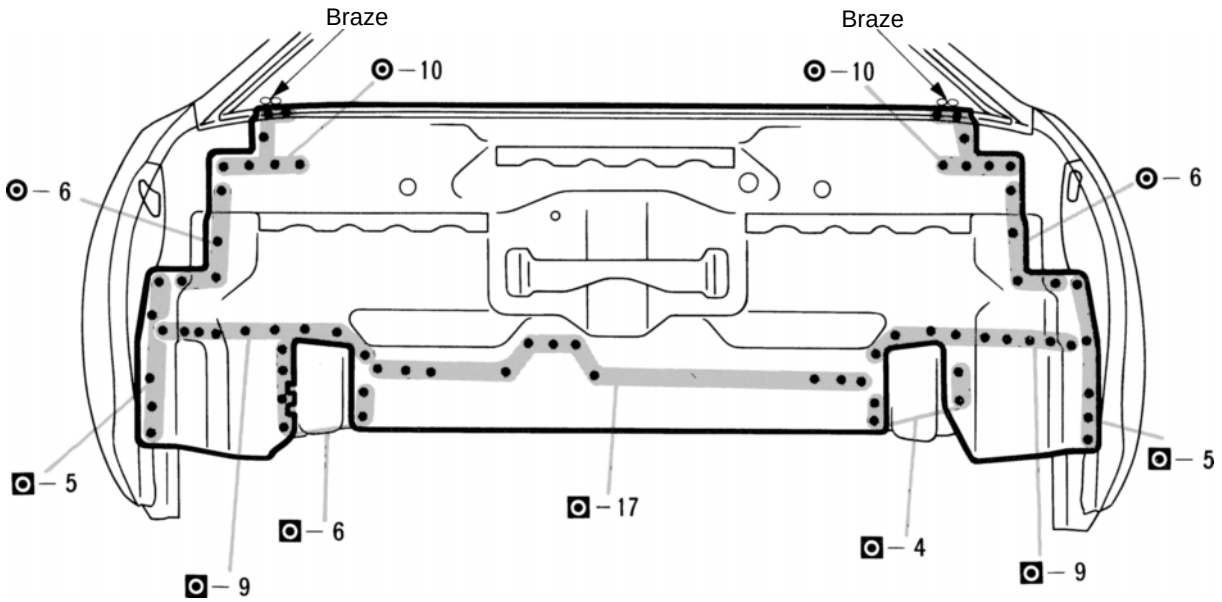

1. Temporarily installing the new parts, check the fit of the back door and rear combination lamp.

QUARTER INNER PANEL (CUT–P): Right Side

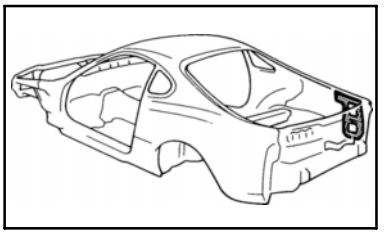

REMOVAL (With the quarter panel and body lower back panel removed.)

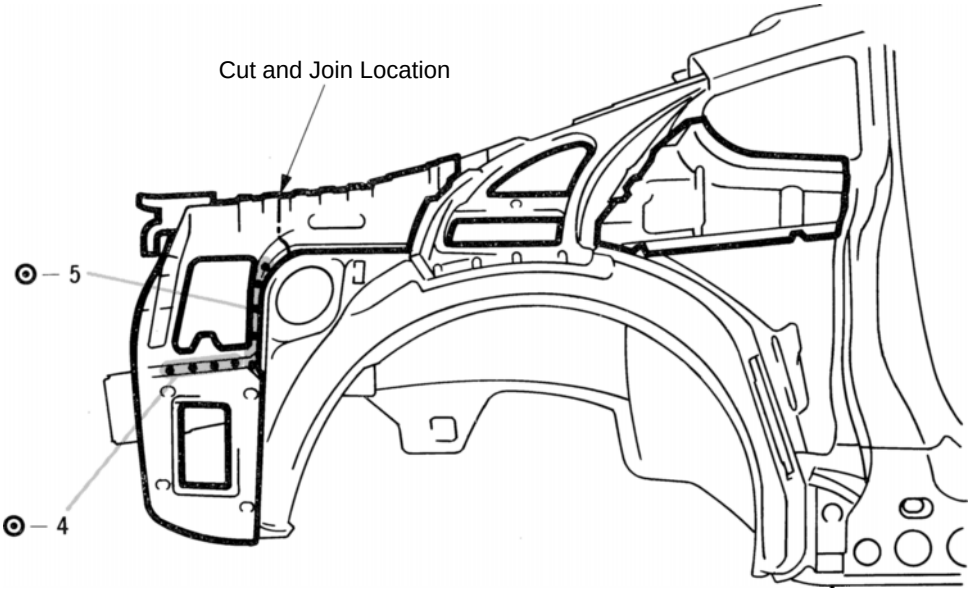

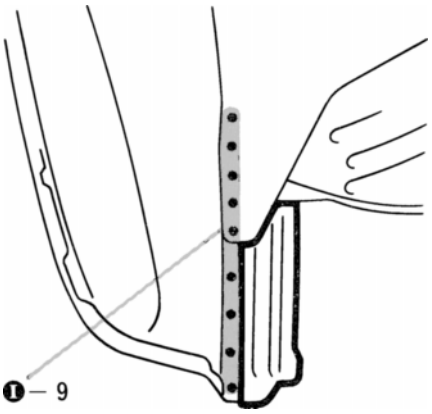

1. Cut and join the parts at the location as shown above.

INSTALLATION

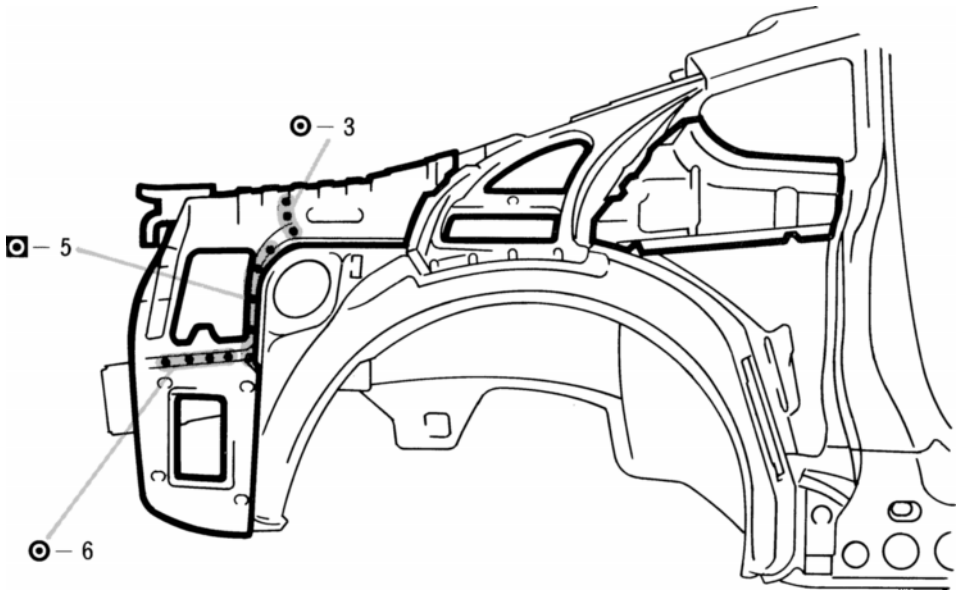

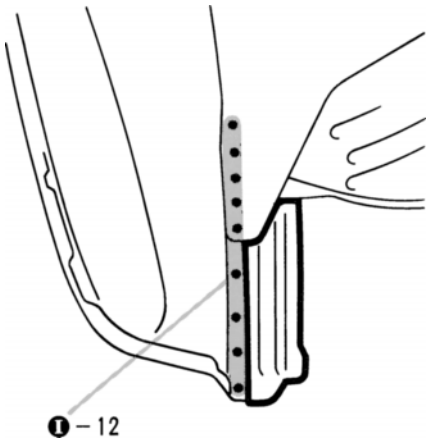

1. Overlap the new parts 20 mm (0.79 in.) at the cut locations and spot weld.
2. For overlapping areas, apply sealer to both sides.

HINT: For other sealing points, refer to section AR.

QUARTER INNER PANEL (CUT–P): Left Side

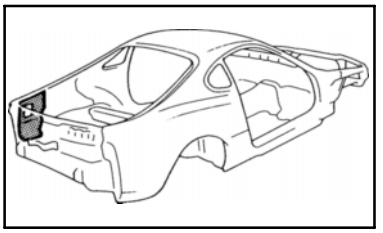

REMOVAL (With the quarter panel and body lower back panel removed.)

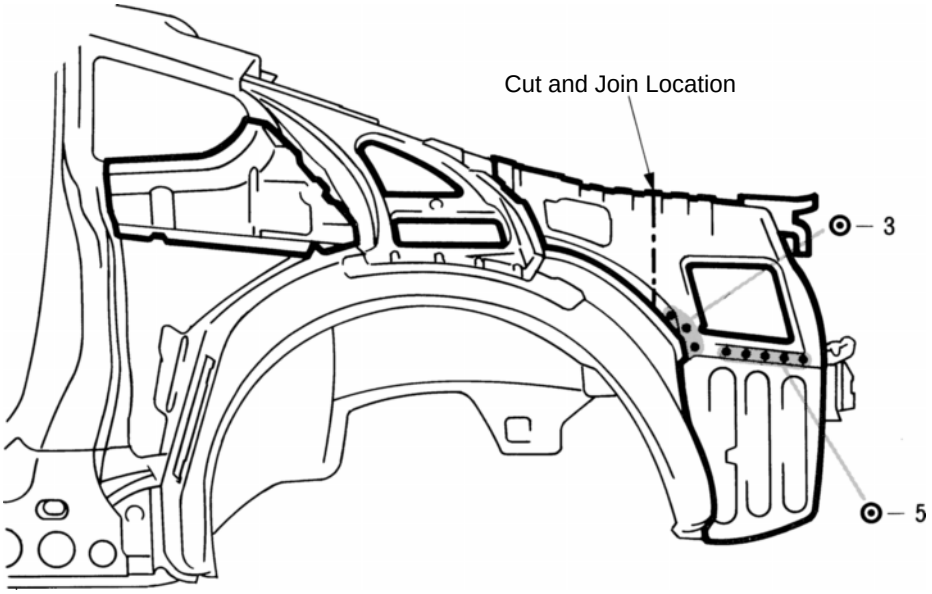

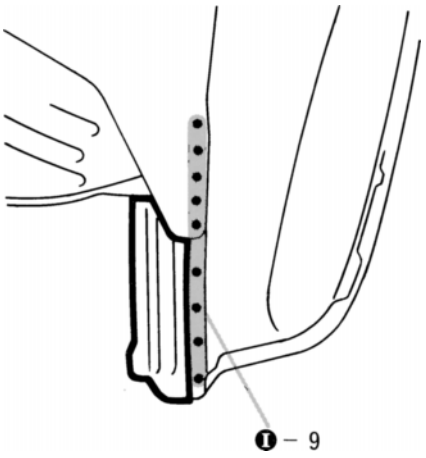

1. Cut and join the parts at the location as shown above.

INSTALLATION

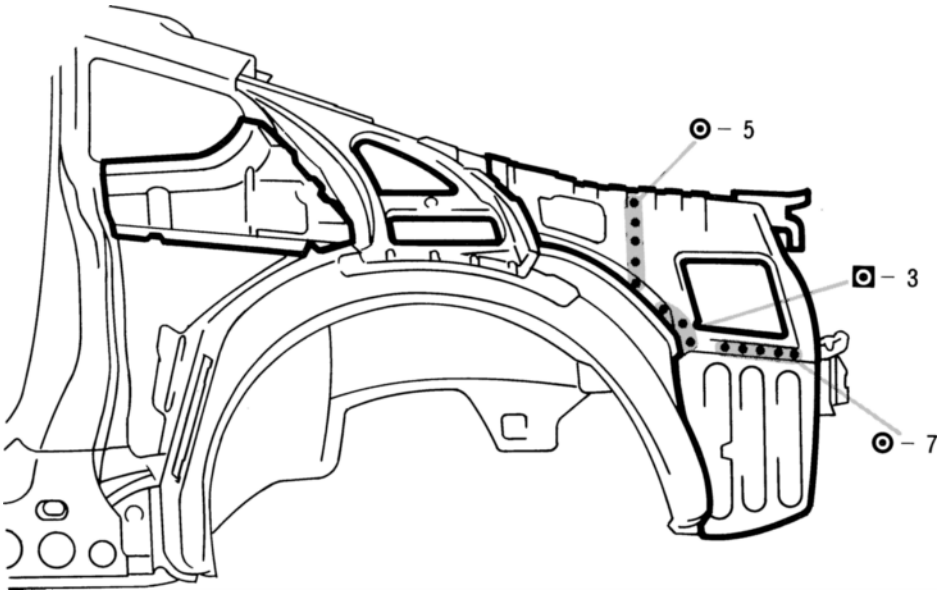

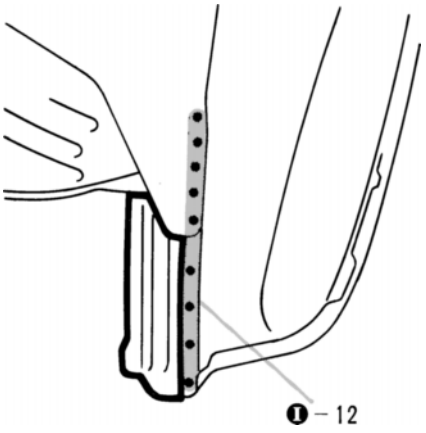

1. Overlap the new parts 20 mm (0.79 in.) at the locations and spot weld.
2. For overlapping areas apply sealer to both sides.

HINT: For other sealing points, refer to section AR.

REAR FLOOR PAN (ASSY)

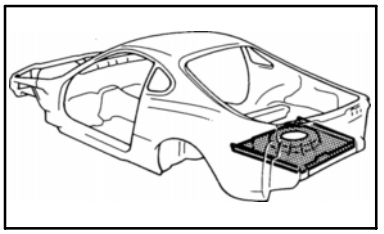

REMOVAL (With the body lower back panel removed.)

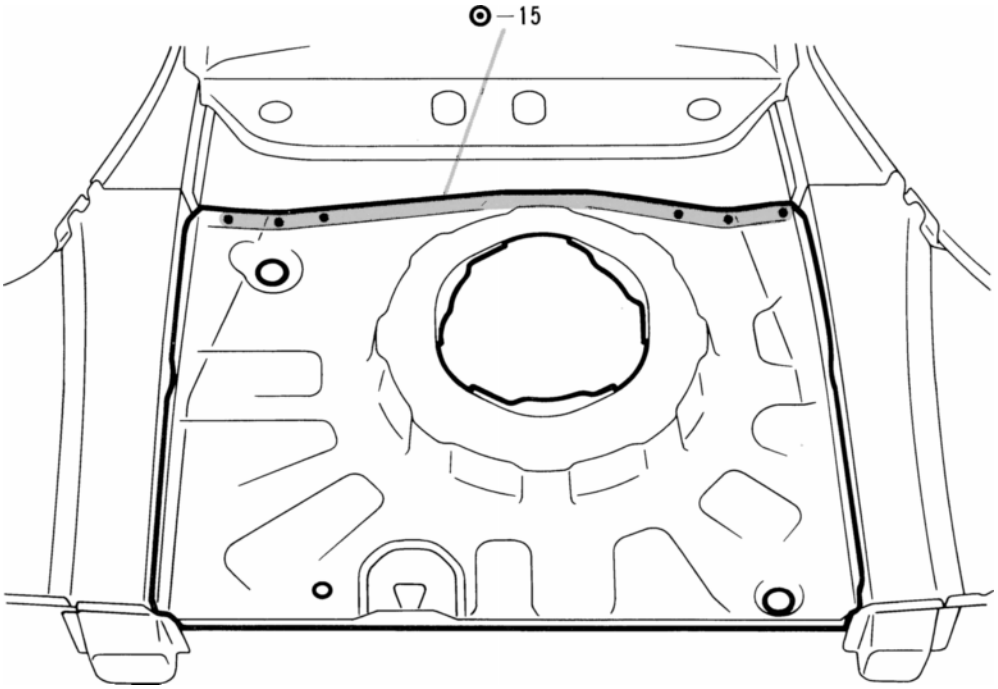

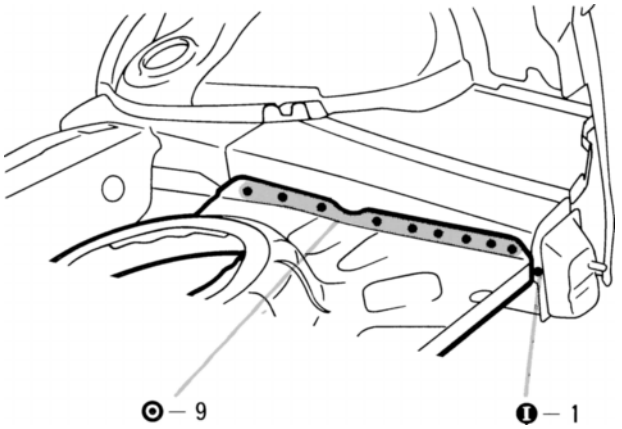

INSTALLATION

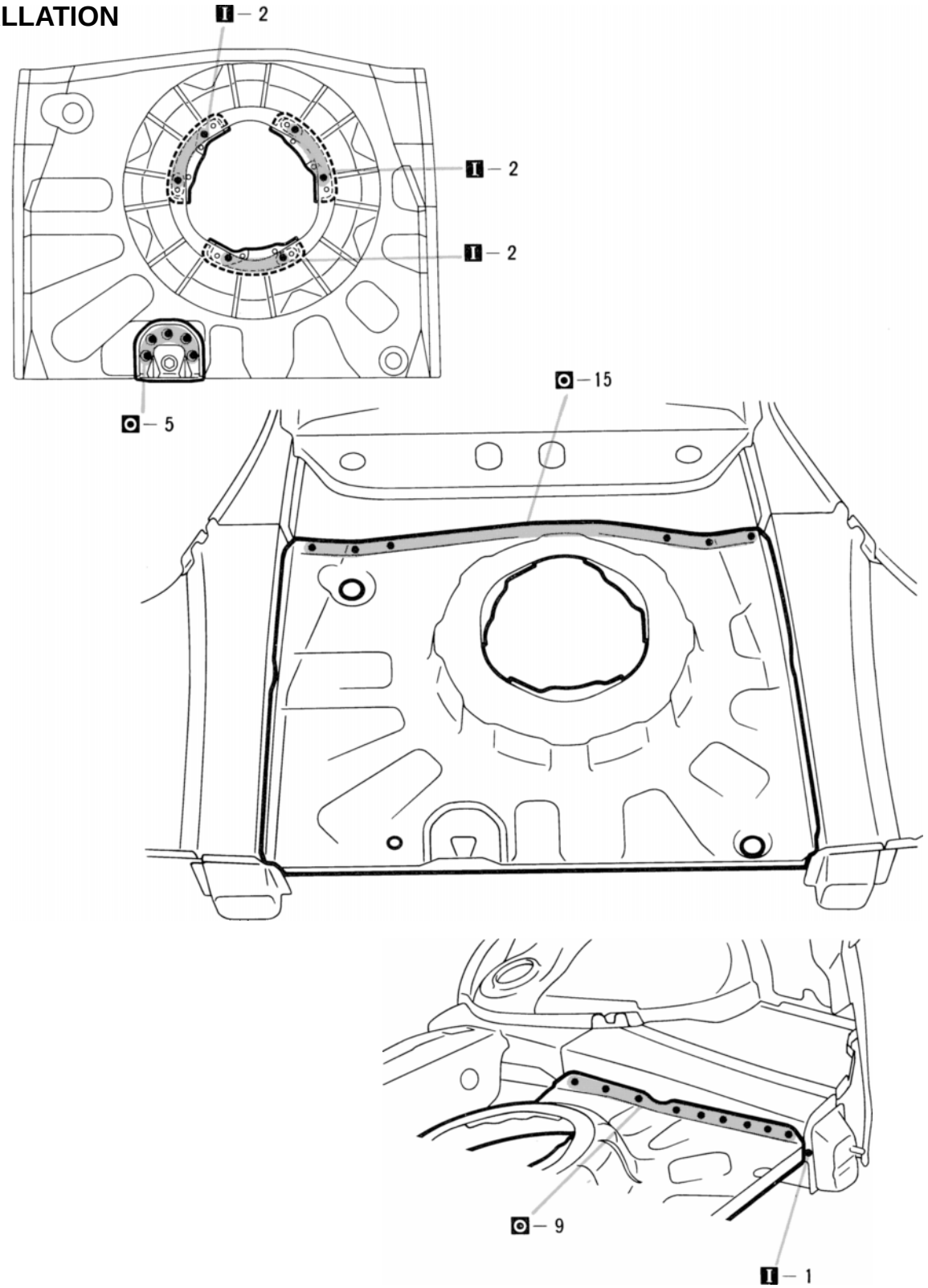

REAR FLOOR PAN TO QUARTER PANEL EXTENSION (ASSY)

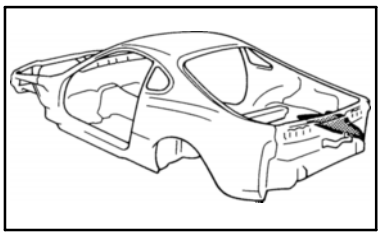

REMOVAL (With the body lower back panel removed.)

(Right Side)

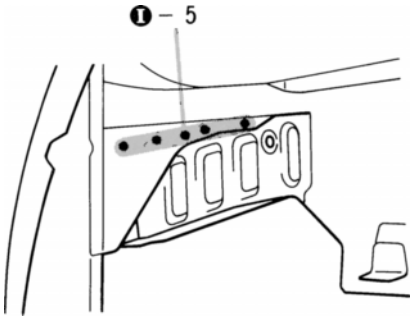

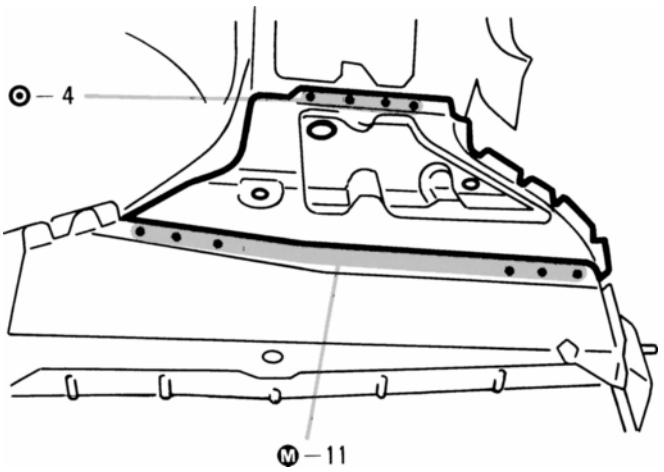

(Left Side)

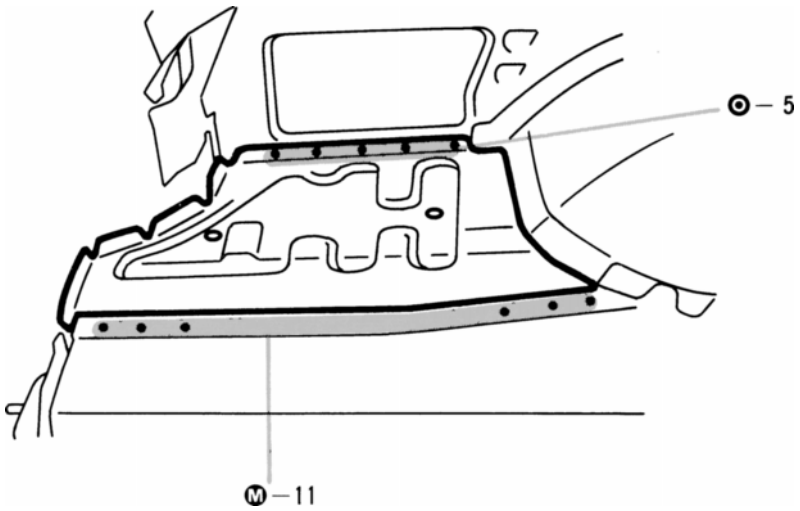

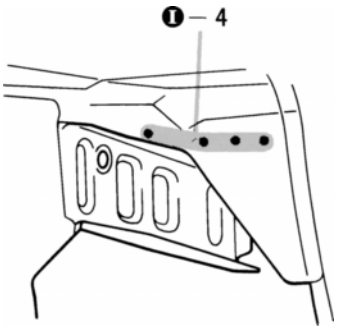

1. Push down on the rear floor pan to quarter panel extension and remove it.

INSTALLATION

(Right Side)

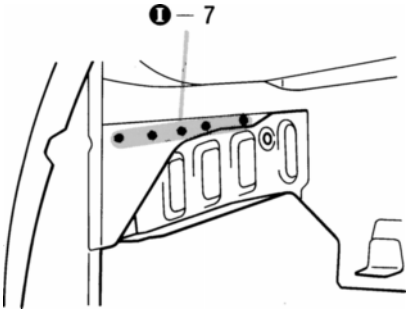

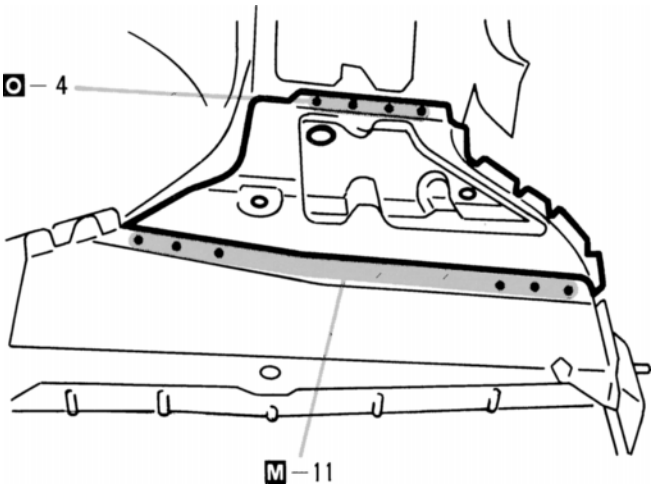

(Left Side)

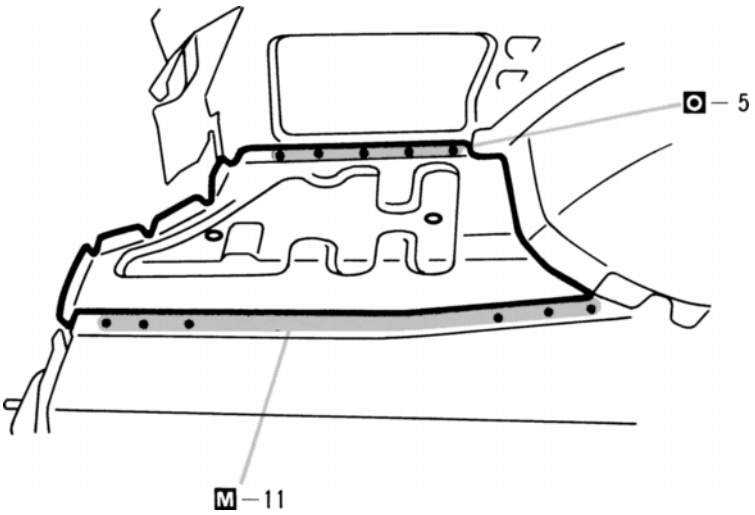

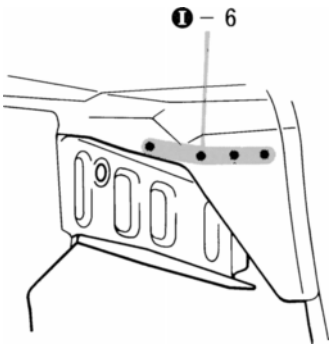

REAR FLOOR SIDE REAR MEMBER (ASSY)

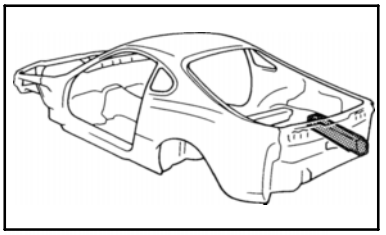

REMOVAL (With the rear floor pan and rear floor pan to quarter panel extension removed.)

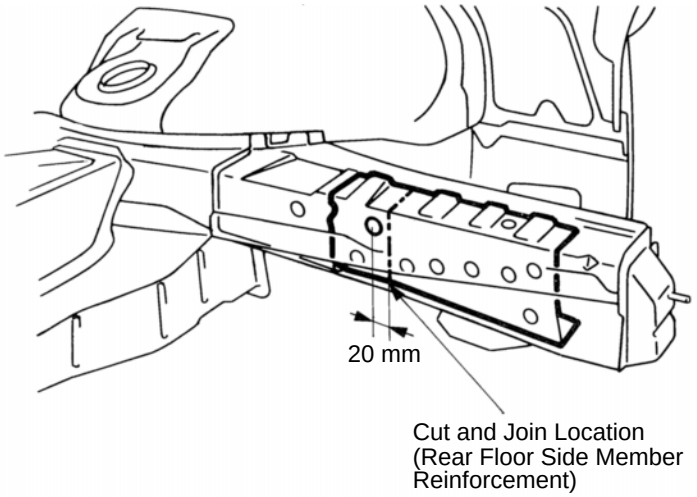

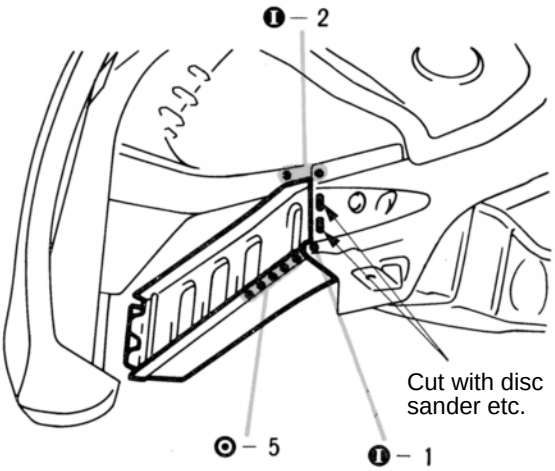

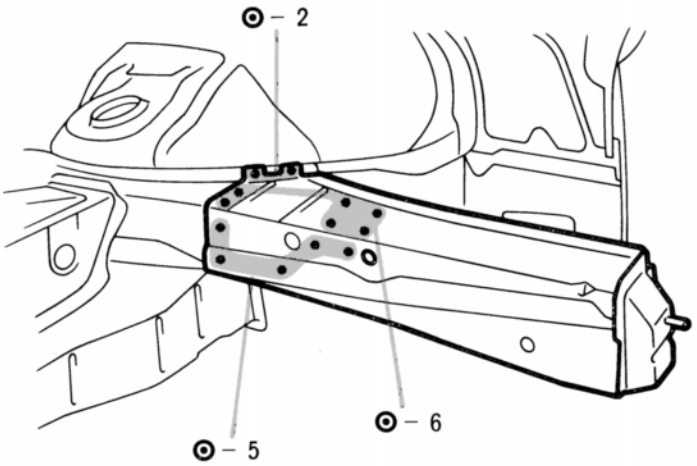

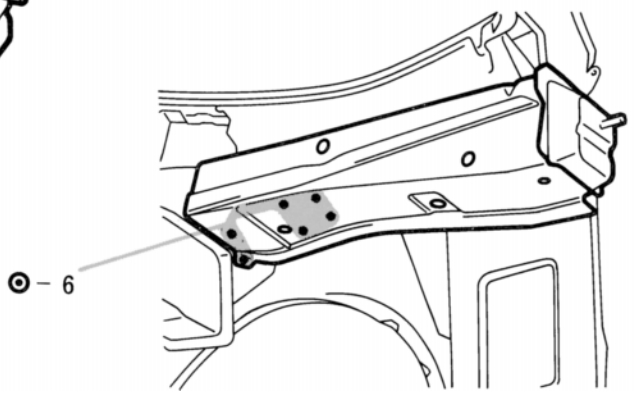

1. Cut out the rear floor side member reinforcement at the cut location indicated above.

mm	in.
20	0.79

INSTALLATION

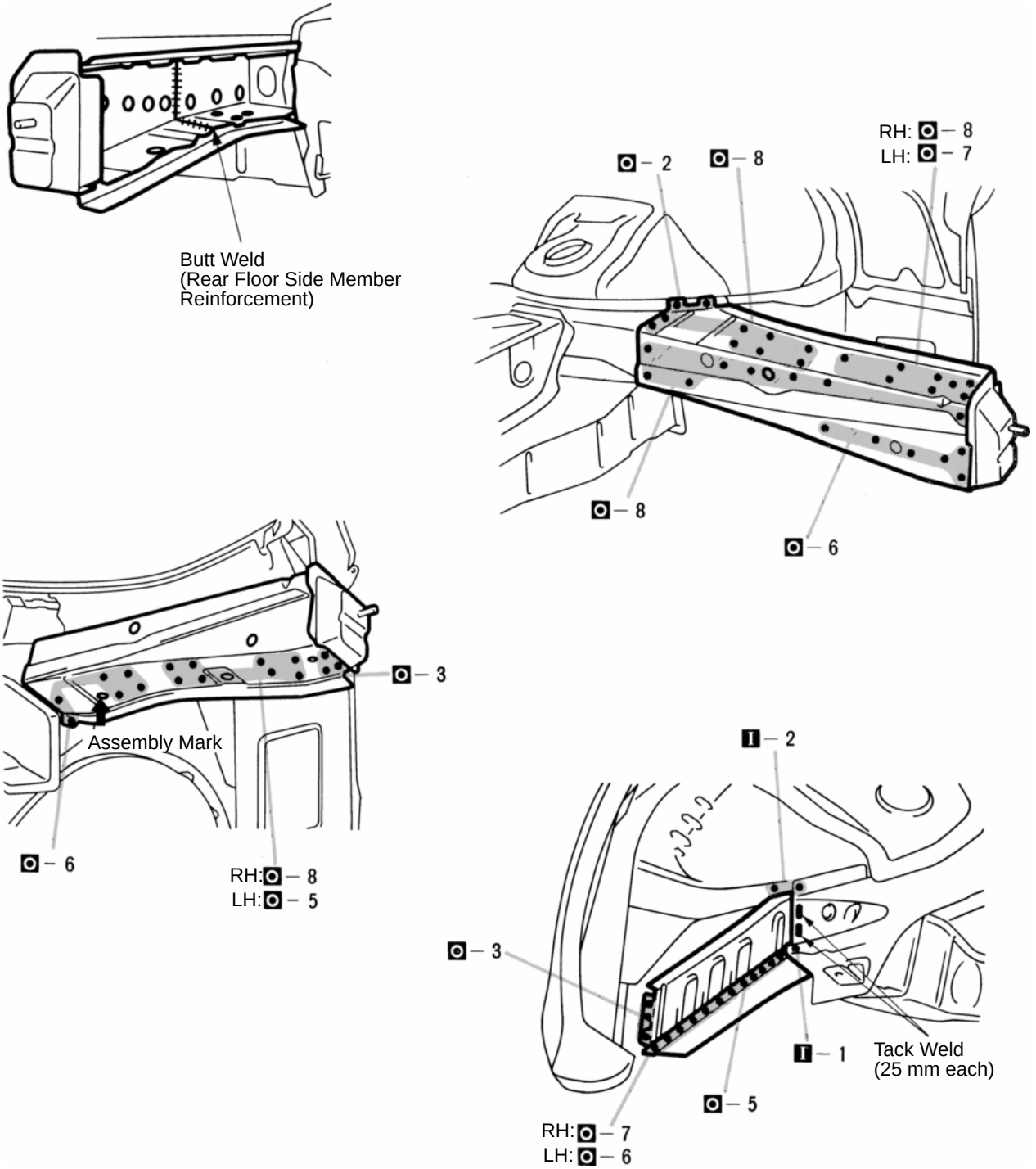

mm	in.
25	0.98

1. When temporarily installing the new parts, determine the installation position by the assembly mark. Then, measure each part in accordance with the body dimension diagram.

REAR FLOOR NO. 2 CROSSMEMBER (ASSY)

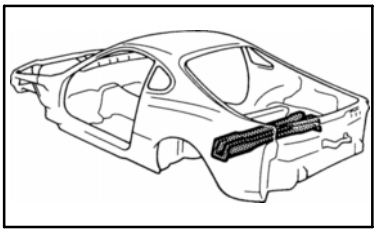

REMOVAL

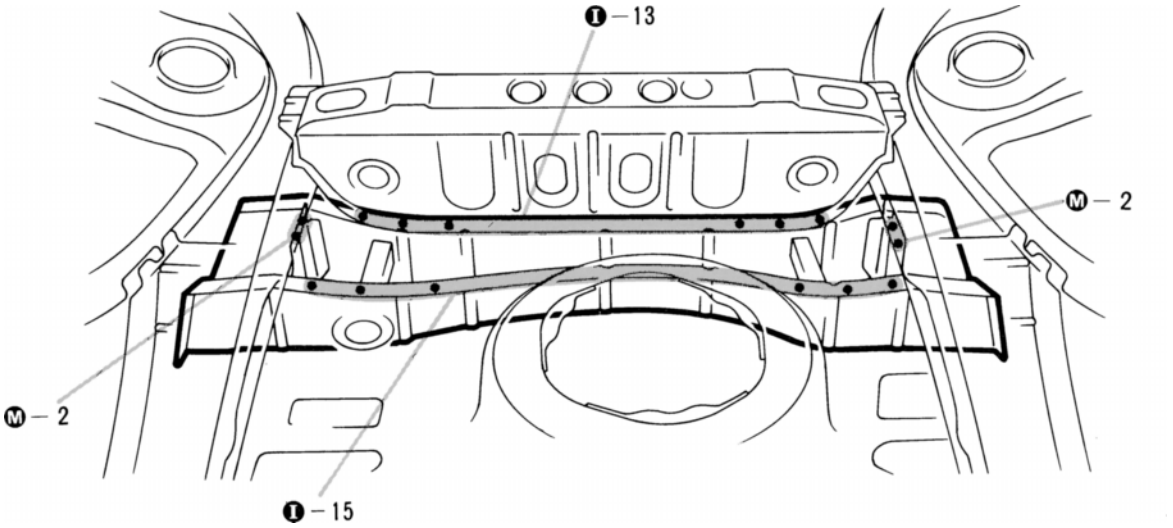

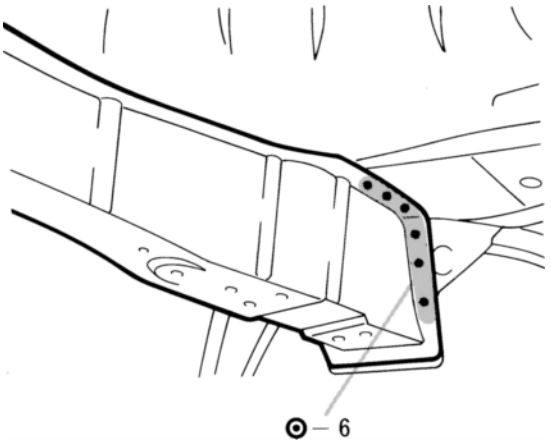

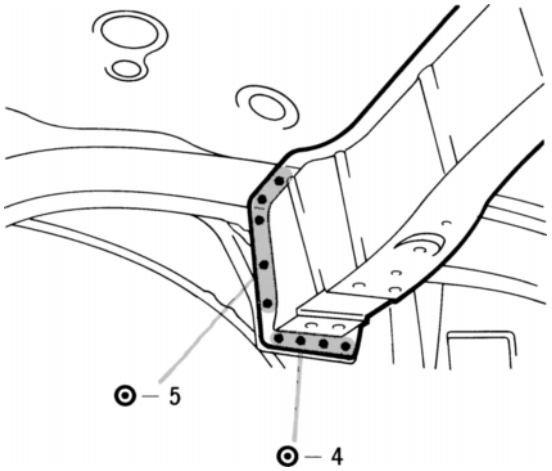

INSTALLATION

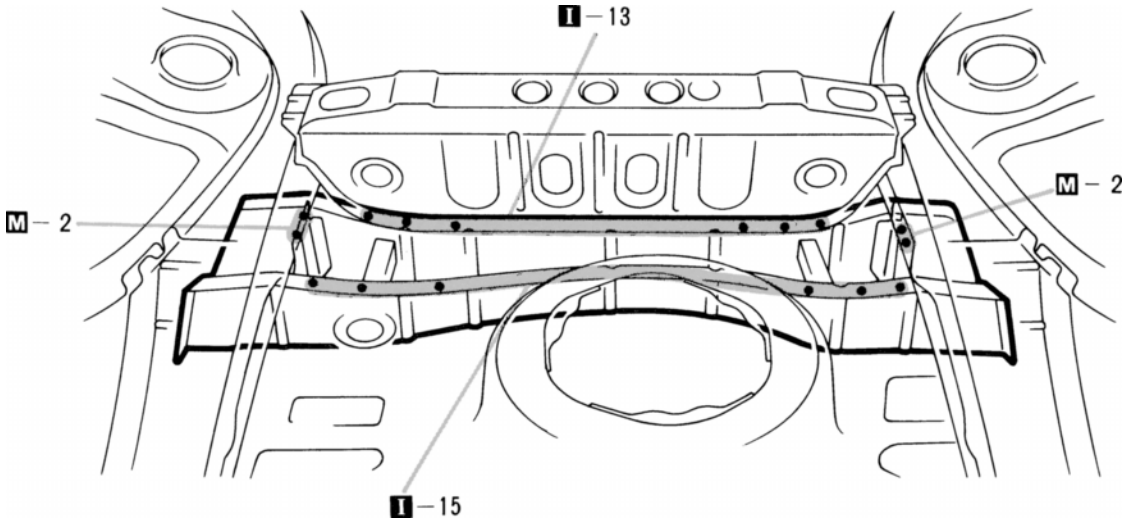

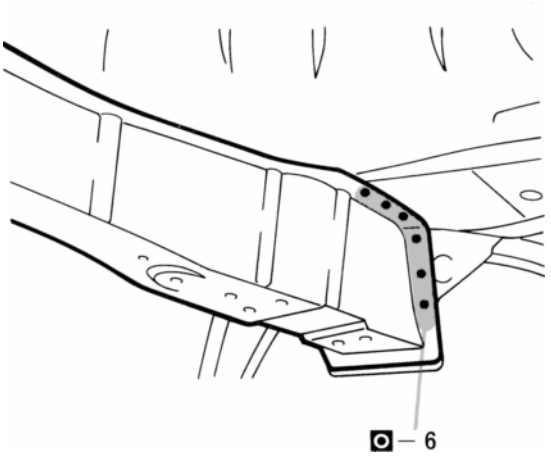

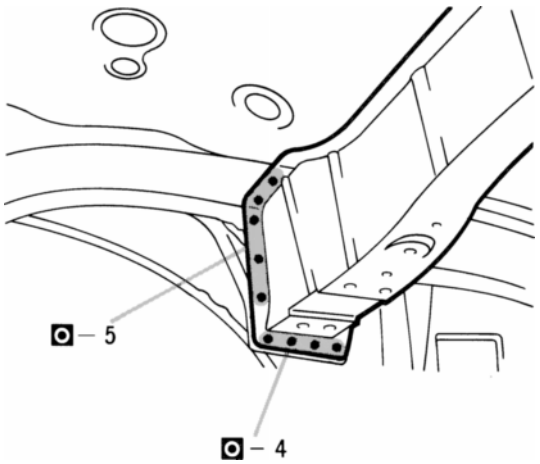

1. Temporarily install the new parts and measure each part in accordance with the body dimension diagram.

ROOF PANEL (ASSY): Normal Roof

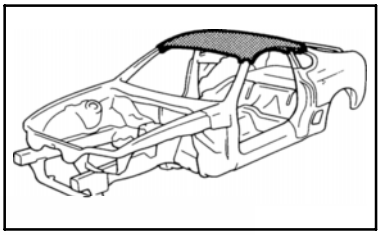

REMOVAL

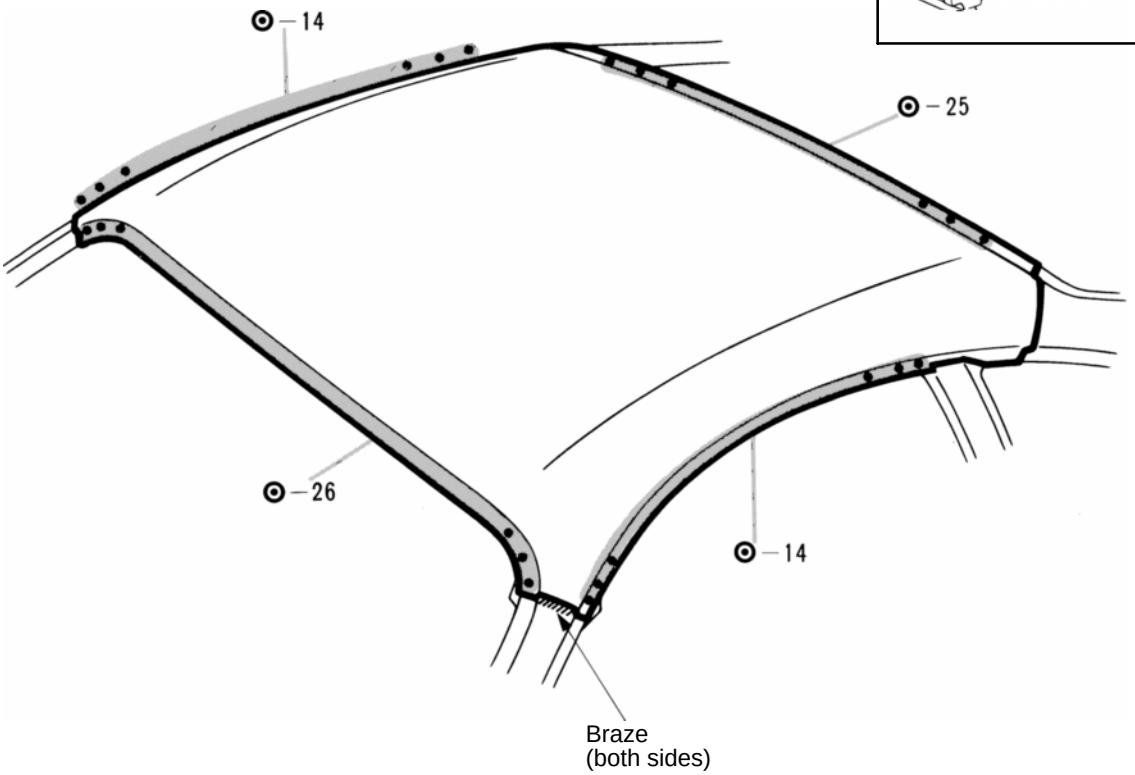

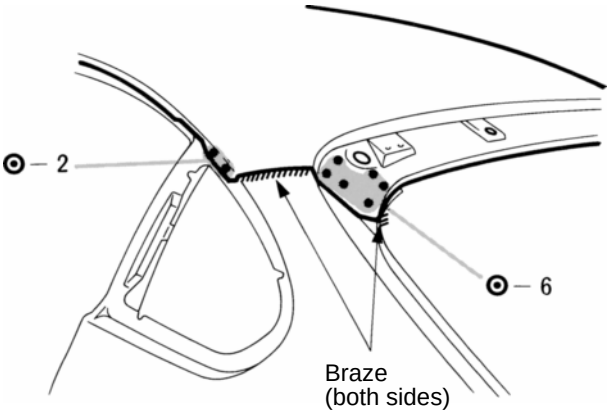

1. Heat the brazed area of the front body pillar and quarter panel and scrape off the brazing with a wire brush

HINT: Be careful not to overheat the pillar sides.

INSTALLATION

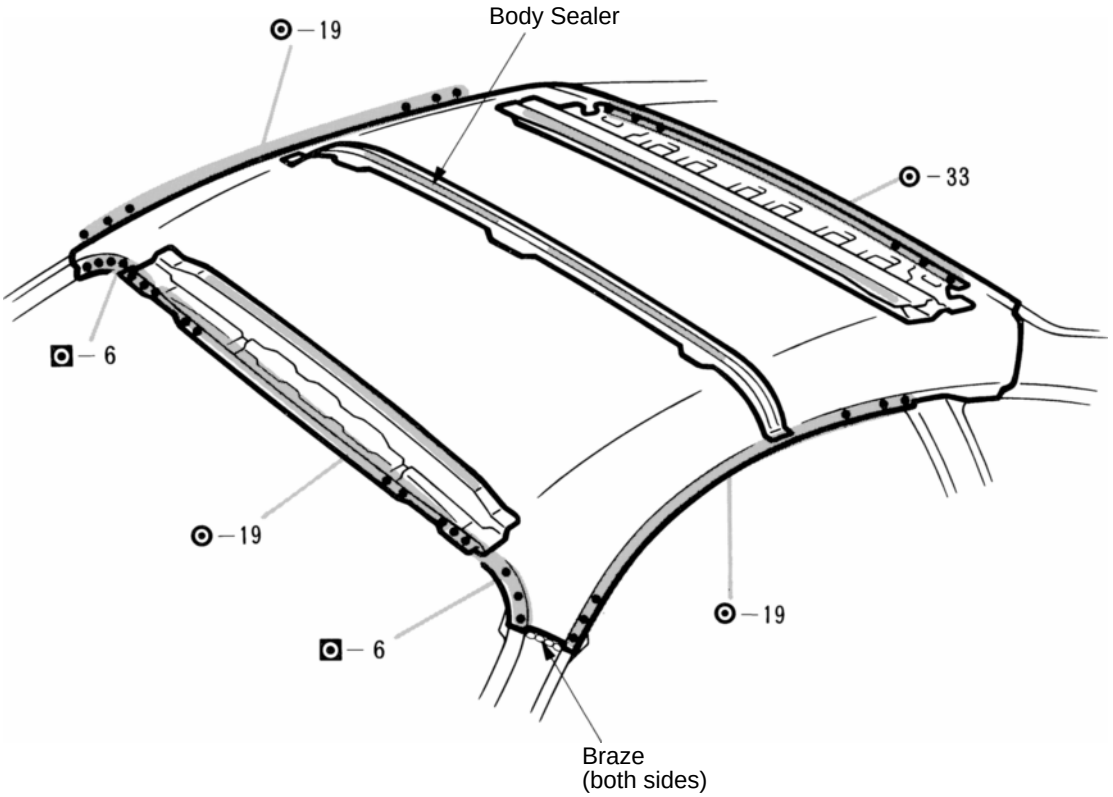

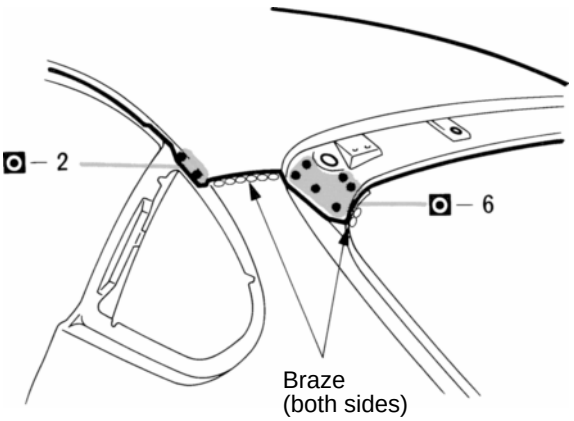

1. Before temporarily installing the new parts, apply body sealer to the windshield header panel, roof panel reinforcement and back door opening frame.

HINT:

1) Apply just enough sealer for the new parts to make contact.

2) For other sealing points, refer to Section AR.

2. Braze the front body pillar and quarter panel connection.

HINT: Before performing these operations, place a wet rag on the roof panel to protect it from damage.

ROOF PANEL (ASSY): Sport Roof

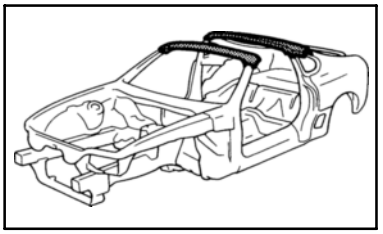

REMOVAL

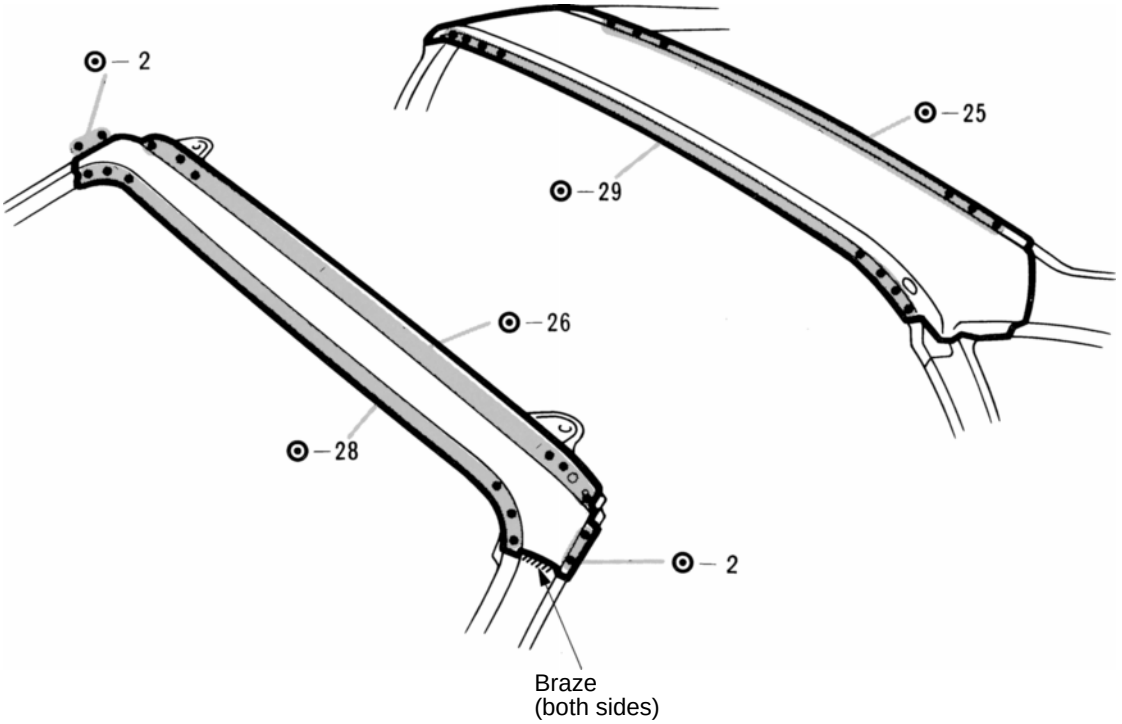

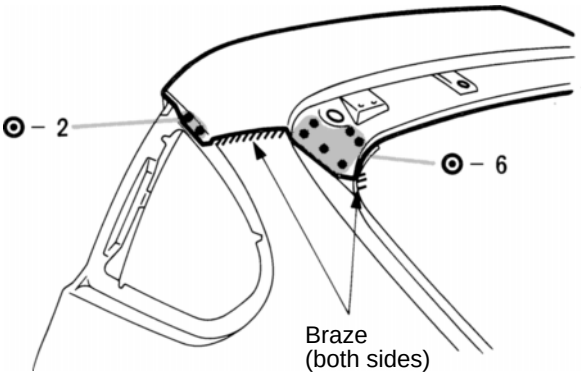

1. Heat the brazed area of the front body pillar and quarter panel and scrape off the brazing with a wire brush.

HINT: Be careful not to overheat the pillar sides.

INSTALLATION

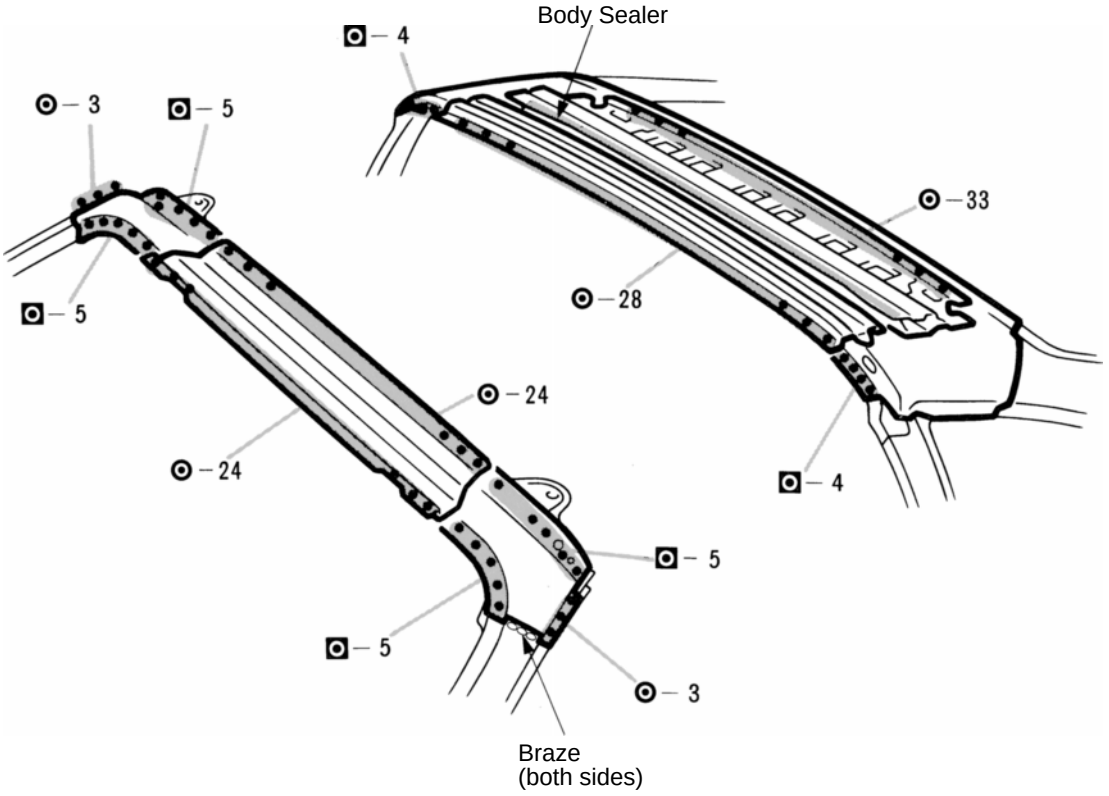

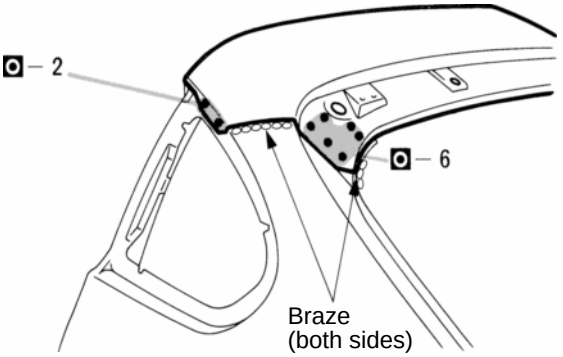

1. Before temporarily installing the new parts, apply body sealer to the windshield header panel, roof panel reinforcement and back door opening frame.

HINT:

1) Apply just enough sealer for the new parts to make contact.

2) For other sealing points, refer to Section AR.

2. Braze the front body pillar and quarter panel connection.

HINT: Before performing these operations, place a wet rag on the roof panel to protect it from damage.

FIT STANDARDS

After doors and the engine hood are installed, be sure to perform fit adjustment to prevent abnormal wind noise and ensure a good appearance.

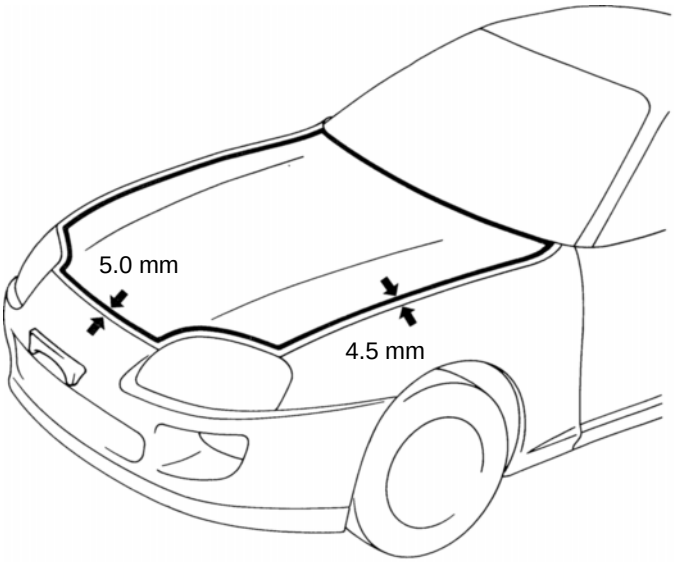

mm	in.
4.5	0.177
4.6	0.181
5.0	0.197
6.5	0.256
9.2	0.362

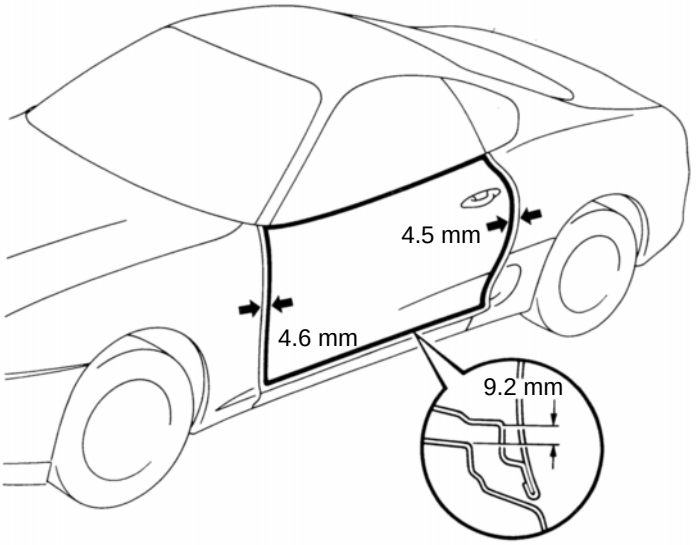

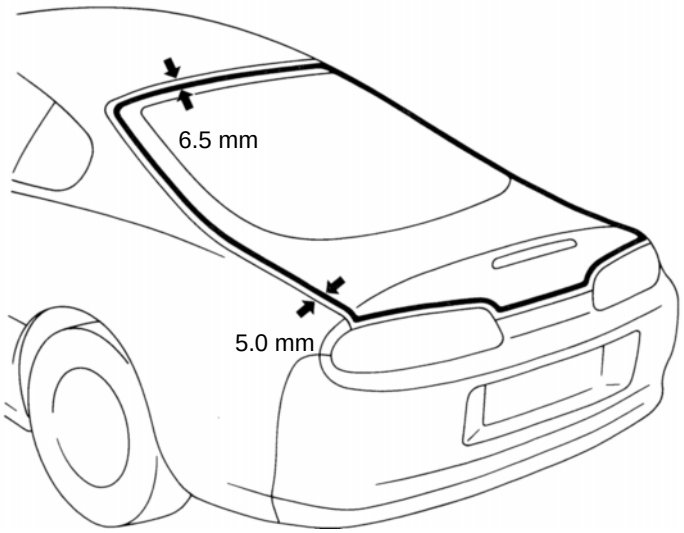

GENERAL INFORMATION

Anti–rust treatment is necessary before welding and before and after the painting process.

ANTI–RUST TREATMENT BEFORE WELDING

1. WELD–THROUGH PRIMER (SPOT SEALER) APPLICATION

For anti–corrosion measures, always apply the weld–through primer (spot sealer) to welding surfaces where the paint film has been removed.
HINT: Apply the weld–through primer (spot sealer) to that it does not ooze out from the joining surfaces.

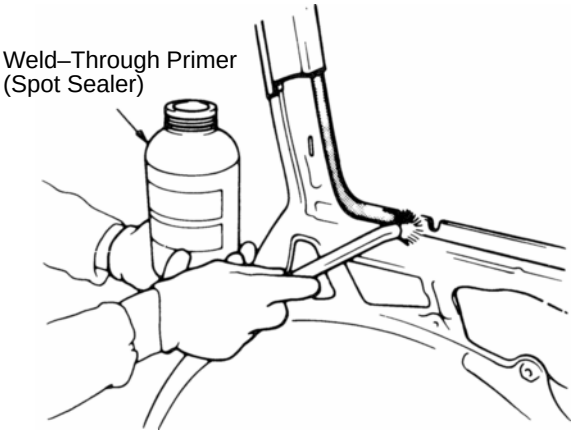

WELD–THROUGH PRIMER (SPOT SEALER) APPLICATION

ANTI–RUST TREATMENT BEFORE PAINTING PROCESS

1. BODY SEALER APPLICATION

For water–proofing and anti–corrosion measures, always apply the body sealer to the body panel seams and hems of the doors, etc.

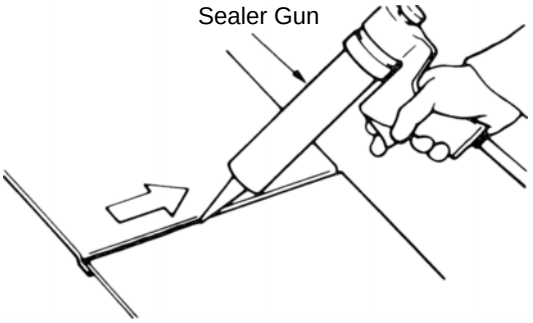

BODY SEALER APPLICATION

2. UNDERCOAT APPLICATION

To prevent corrosion and protect the body from damage by flying stones, always apply sufficient undercoat to the bottom surface of the under body and inside of the wheel housings.

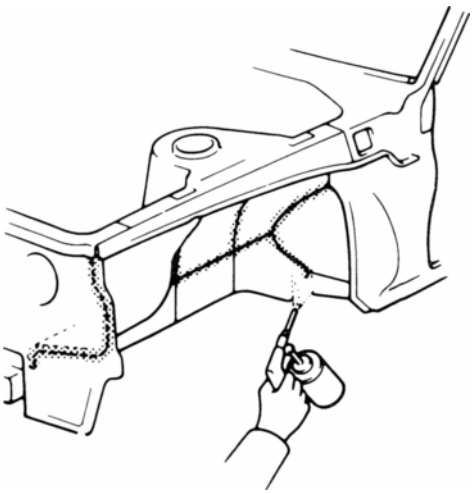

UNDERCOAT APPLICATION

ANTI–RUST TREATMENT AFTER PAINTING PROCESS

1. ANTI–RUST AGENT (WAX) APPLICATION

To preserve impossible to paint areas from corrosion, always apply sufficient anti–rust agent (wax) to the inside of the hemming areas of the doors and hoods, and around the hinges, or the welded surfaces inside the boxed cross–section structure of the side member, body pillar, etc.

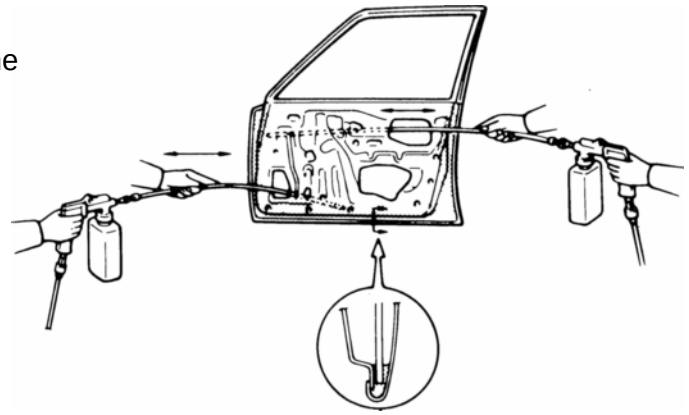

ANTI–RUST AGENT (WAX) APPLICATION

REFERENCE: ANTI–RUST TREATMENT BY PAINTING

Painting prevents corrosion and protects the sheet metal from damage. In this section, anti–chipping paint only for anti–corrosion purpose is described.

1. ANTI–CHIPPING PAINT

To prevent corrosion and protect the body from damage by flying stones, etc., apply anti–chipping paint to the rocker panel, wheel arch areas, valance panel, etc.

HINT:

Depending on the model or the application area, there are cases where the application of anti–chipping paint is necessary before the second coat or after the top coat.

- Apply the anti–chipping paint after the top coat.

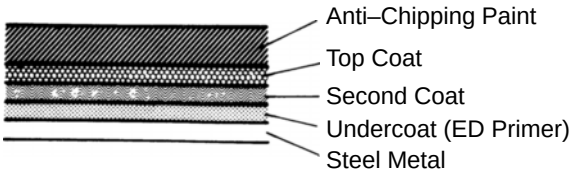

- Apply the anti–chipping paint before the second coat.

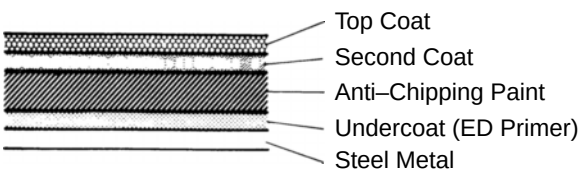

BODY PANEL SEALING AREAS

HINT:

1. *Prior to applying body sealer, clean the area with a rag soaked in a grease, wax and silicone remover.*
2. *If weld through primer was used, first wipe off any excess and coat with anti–corrosion primer before applying body sealer.*
3. *Wipe off excess body sealer with a rag soaked in a grease, wax and silicone remover.*
4. *If body sealer is damaged by peeling, cracks, etc., be sure to repair as necessary.*

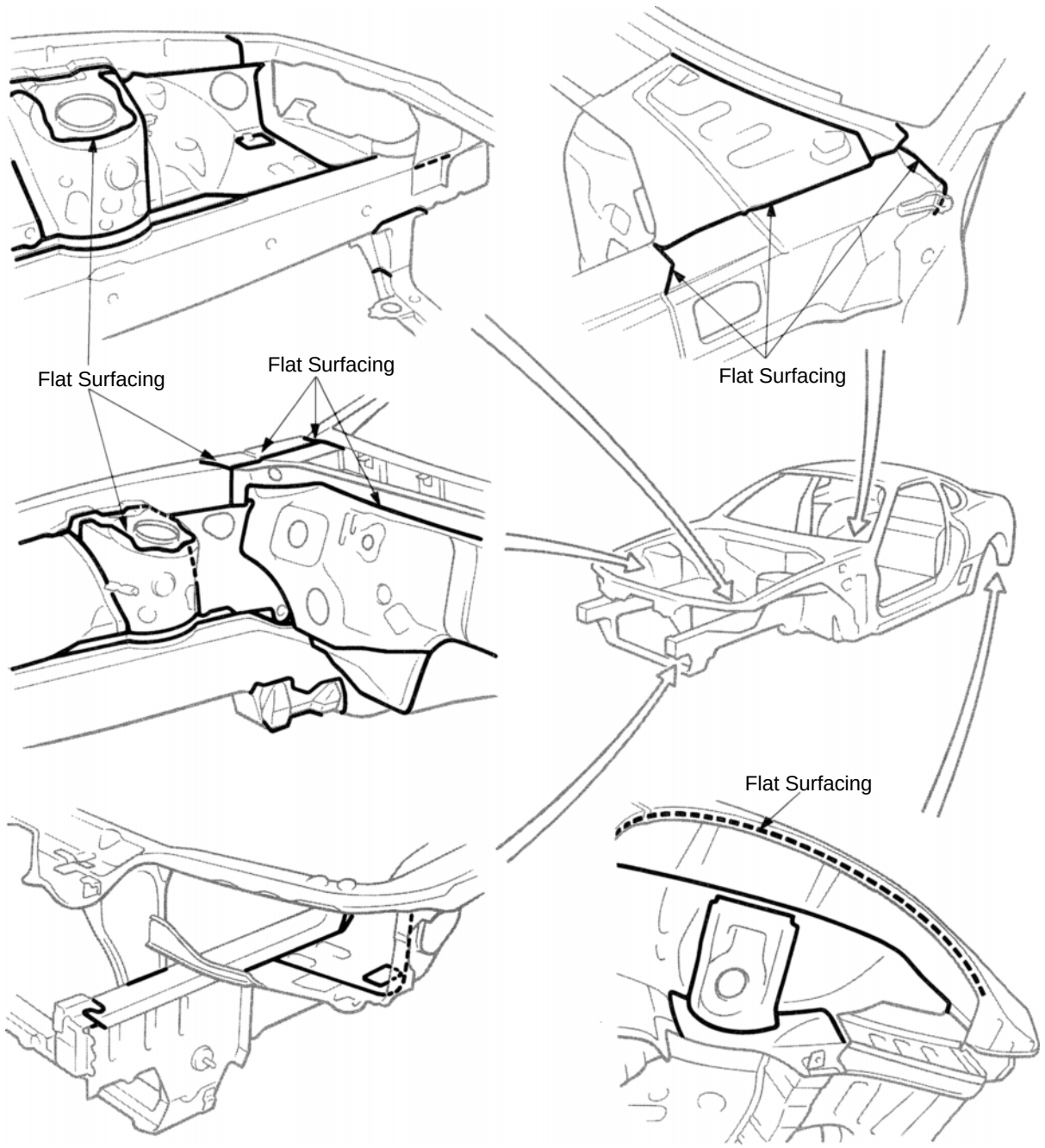

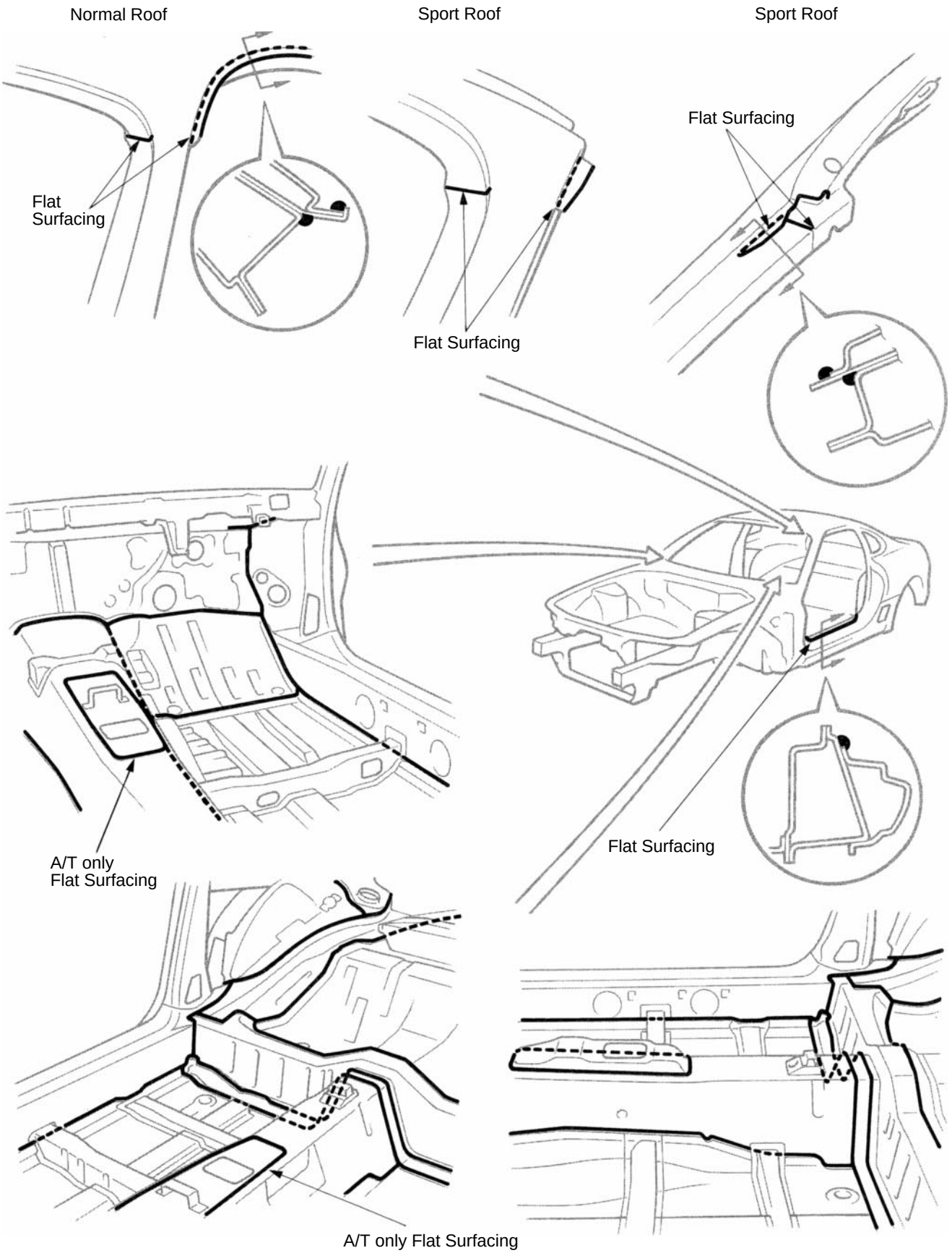
Normal Roof
Sport Roof
Sport Roof
Flat
Surfacing
Flat Surfacing
Flat Surfacing
A/T only
Flat Surfacing
Flat Surfacing
A/T only Flat Surfacing

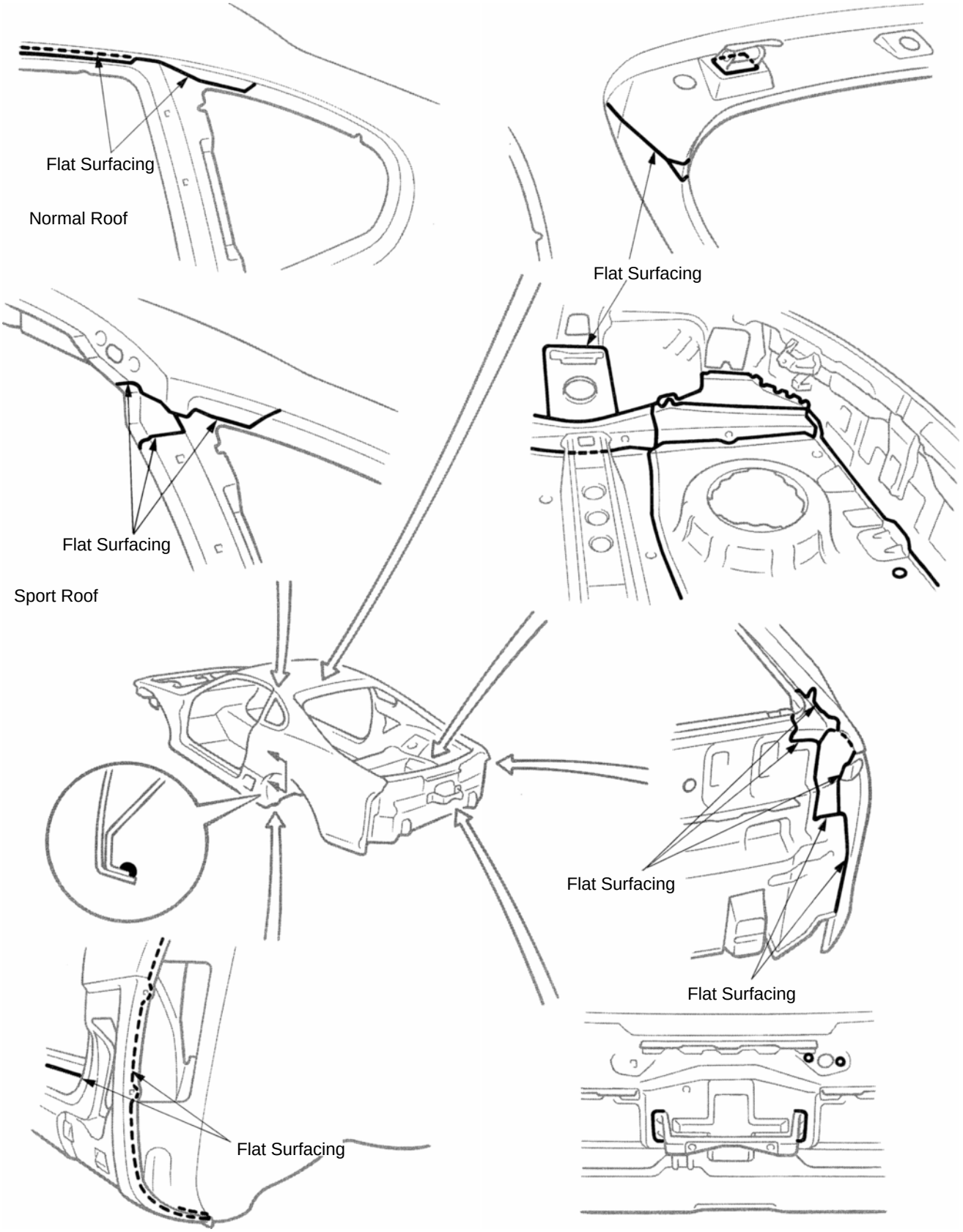
Flat Surfacing
Normal Roof
Flat Surfacing
Flat Surfacing
Sport Roof
Flat Surfacing
Flat Surfacing
Flat Surfacing

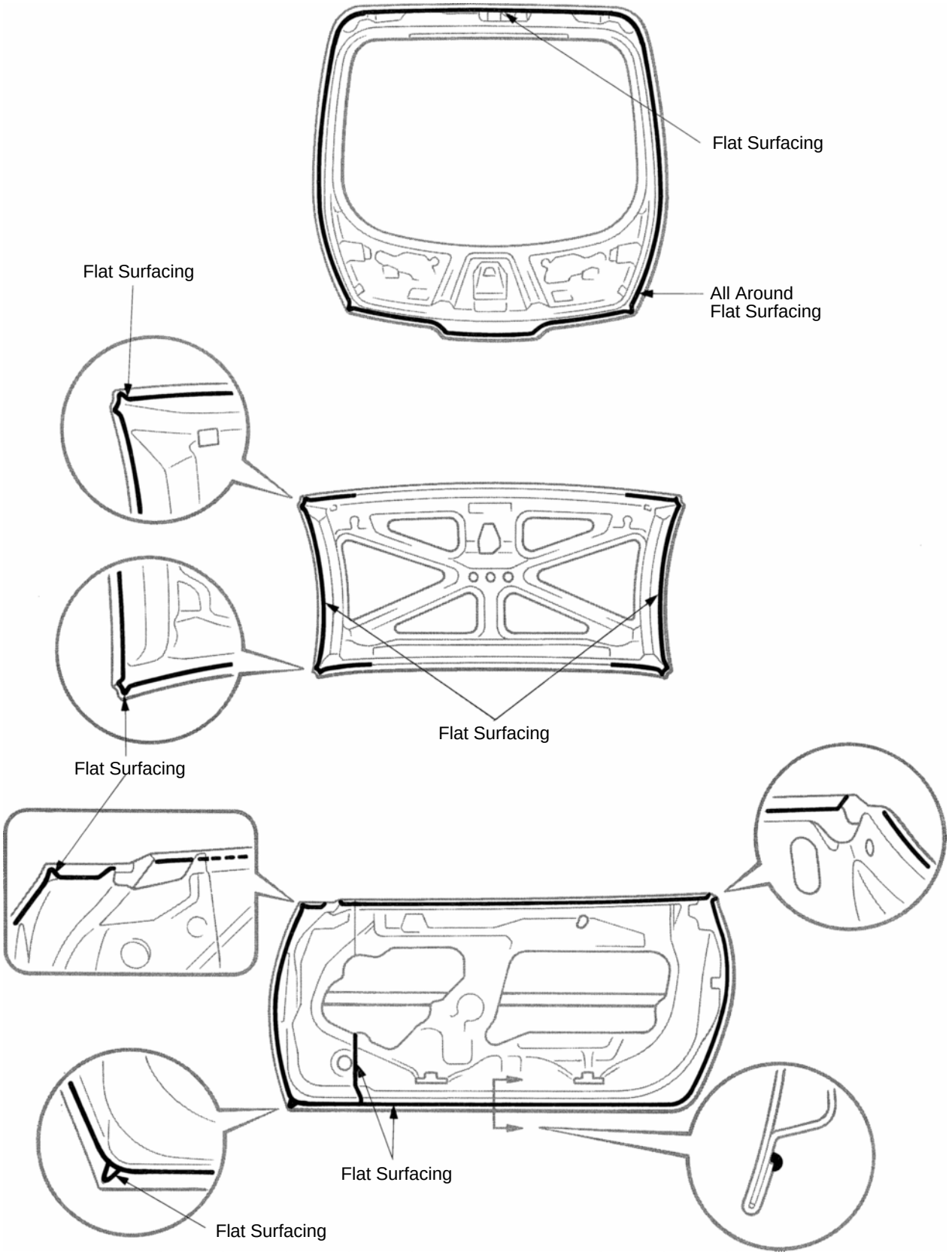
Flat Surfacing
All Around
Flat Surfacing
Flat Surfacing
Flat Surfacing
Flat Surfacing
Flat Surfacing
Flat Surfacing

BODY PANEL UNDERCOATING AREAS

HINT:

1. *First wipe off any dirt, grease or oil with a rag soaked in a grease, wax and silicone remover.*
2. *Cover the surrounding areas with masking paper to avoid coating unnecessary areas. If other areas are accidently coated, wipe off the coating immediately.*
3. *Apply the first coating of undercoat to all welded areas and panel joints, then apply a second coat over the entire area.*
4. *Do not coat parts which become hot, such as the tailpipe, or moving parts, such as the propeller shaft.*
5. *Besides the locations described below, apply undercoating to all weld points under the body to insure corrosion prevention.*
6. *Be sure to seal the edge of the flange of the member and bracket with undercoating.*
7. *If undercoat is damaged by peeling, cracks etc., be sure to repair as necessary.*

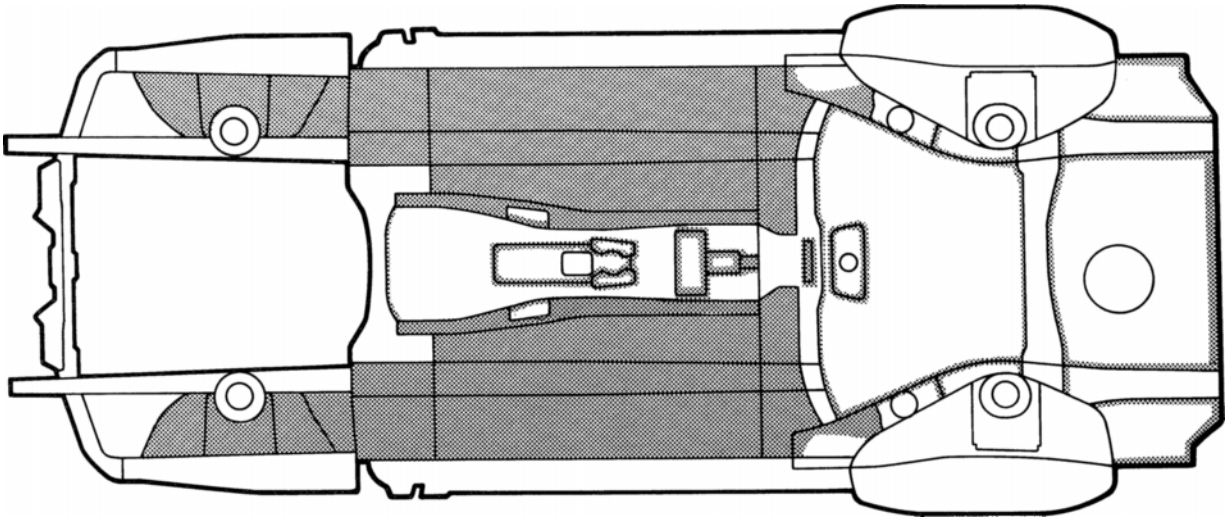

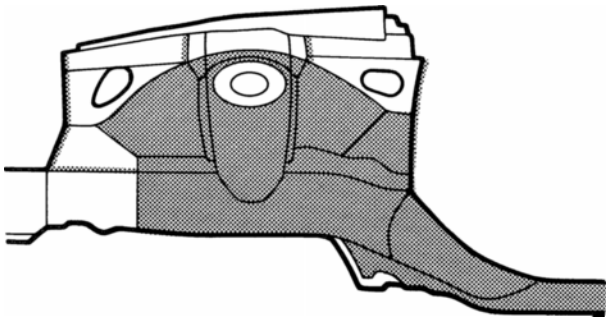

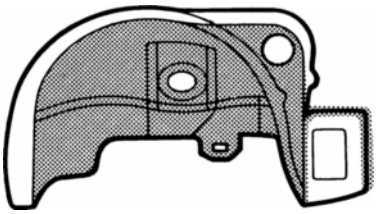

REFERENCE: Referring to the notes above, undercoating should be applied according to the specifications for your country.

BODY PANEL ANTI–RUST AGENT (WAX) APPLICATION AREAS

HINT:

1. *Whenever adjusting the doors and hoods, apply anti–rust agent (wax) around the hinges.*
2. *Even if partially repairing a part, apply anti–rust agent (wax) over the entire application area of the part.*
3. *Wipe off the anti–rust agent immediately with a rag soaked in a grease, wax and silicone remover, if accidently applied to other areas.*

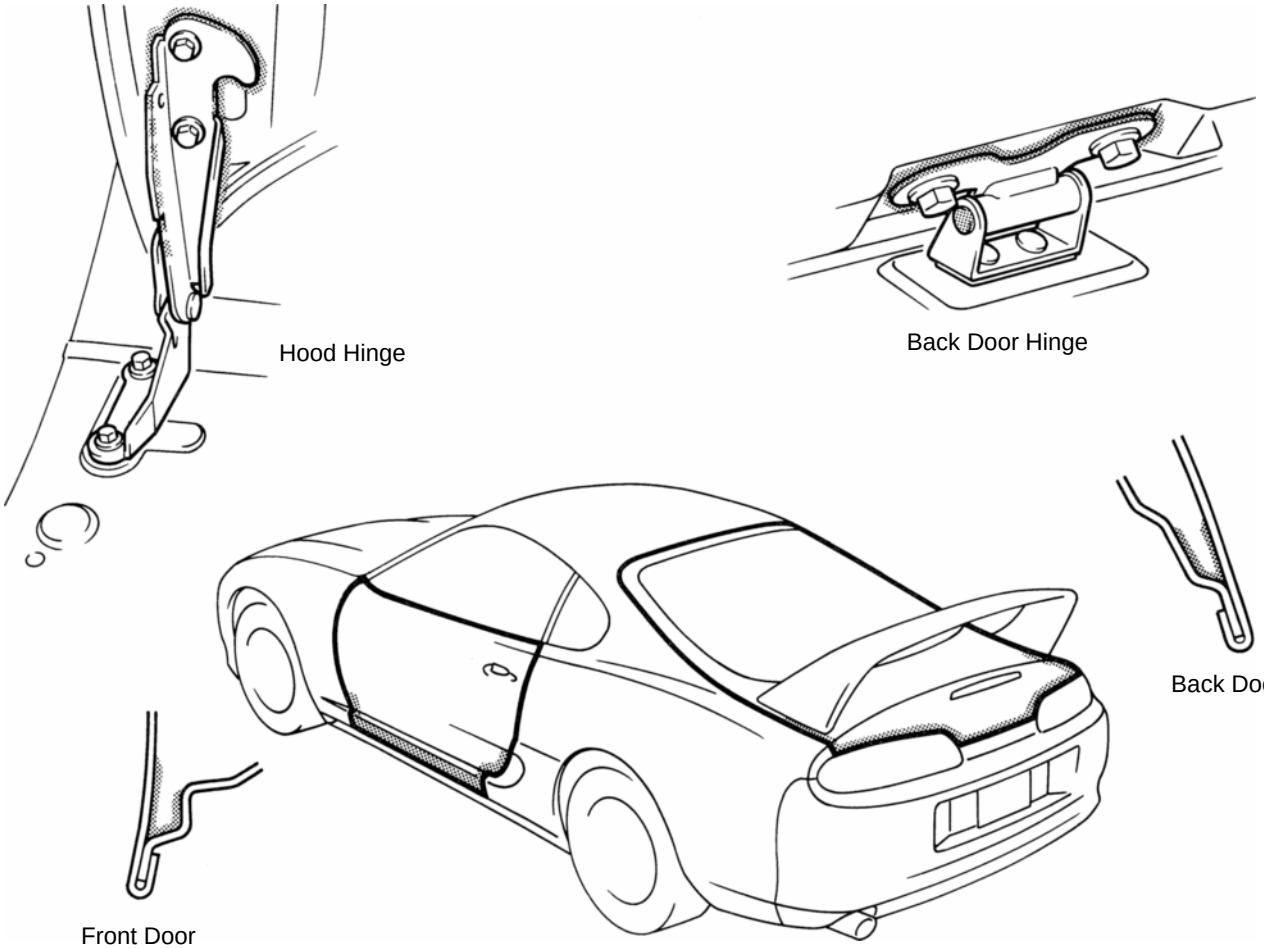

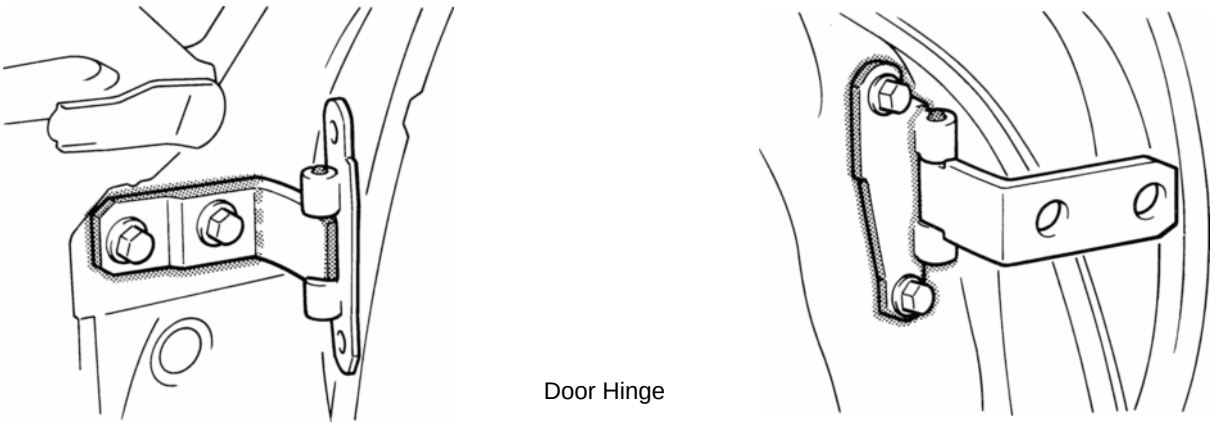

BODY PANEL ANTI–CHIPPING PAINT APPLICATION AREAS

HINT:

1. *Anti–chipping paint should be applied to some areas before the second coat and to others after the top coat.*
2. *If other areas are accidentally coated, wipe of the paint immediately with a rag soaked in a grease, wax and silicone remover.*

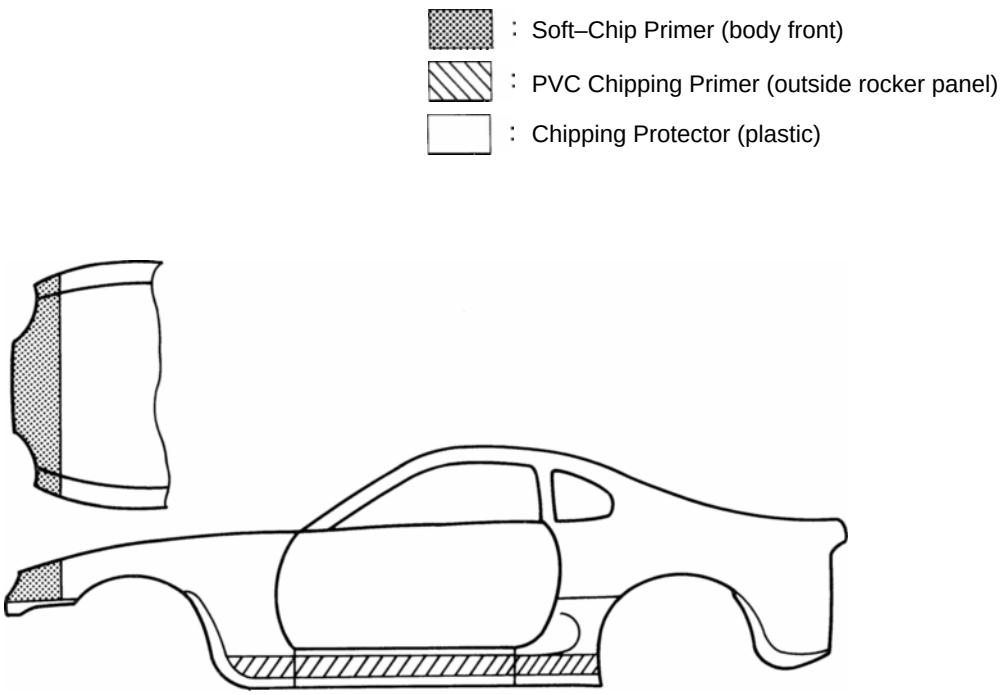

SILENCER SHEET INSTALLATION AREAS

Thickness of Asphalt Sheet

. . . . . 1.5 mm (0.059 in.)

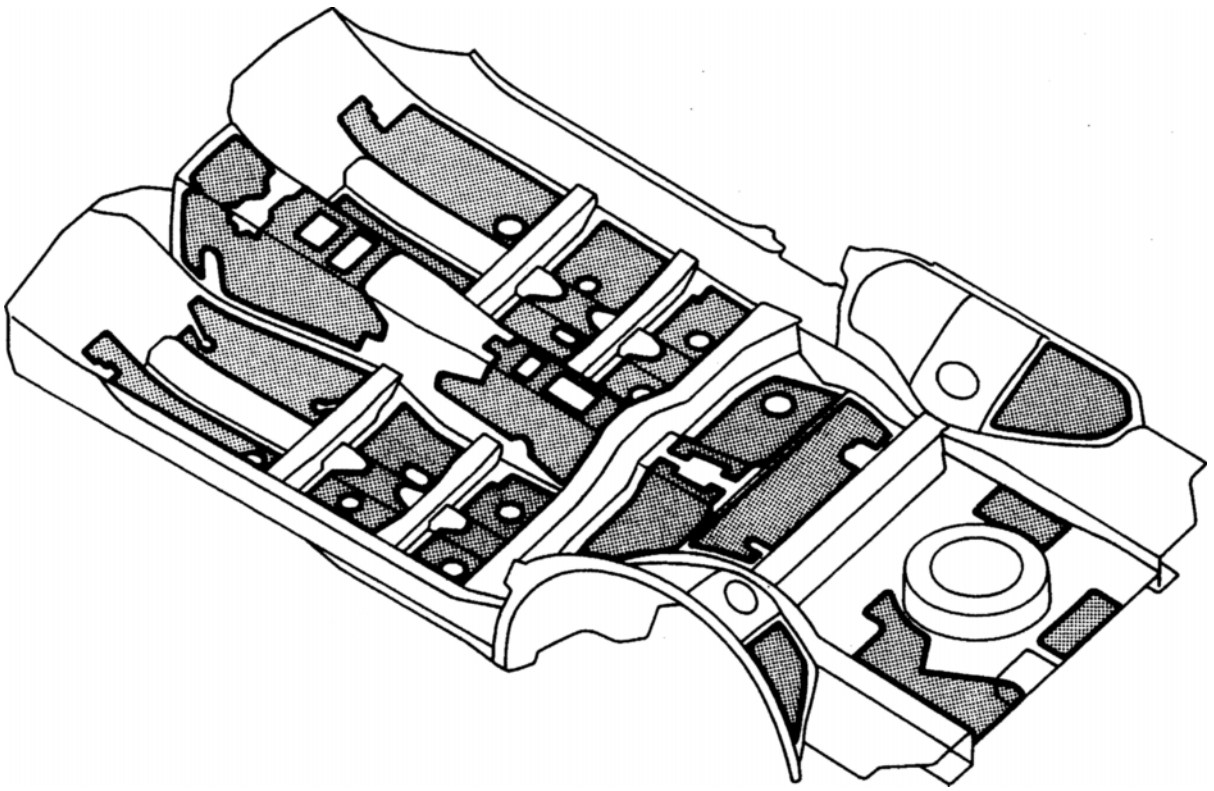

FOAMED MATERIAL APPLICATION AREAS

The sections shown in the figure below are filled with foamed material to provide noise insullation.
After repairing these sections or their peripheries, refill with foamed materials.
HINT:

1. *Use the service holes located on the reverse side of the body panel to refill with foamed materials.*
2. *When handling foamed material, follow the directions of the material's manufacturer.*



NORMAL ROOF

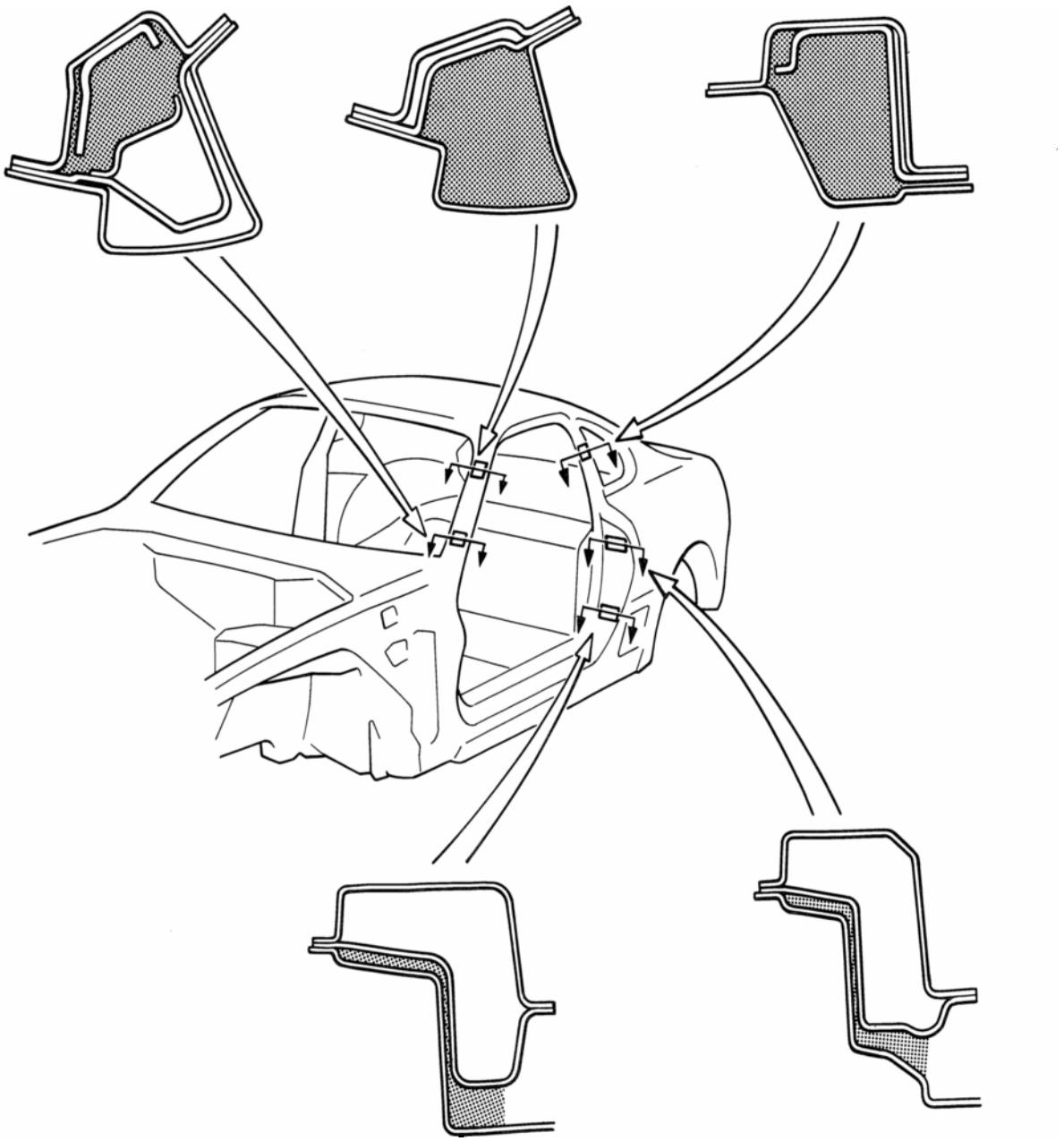

SPORT ROOF

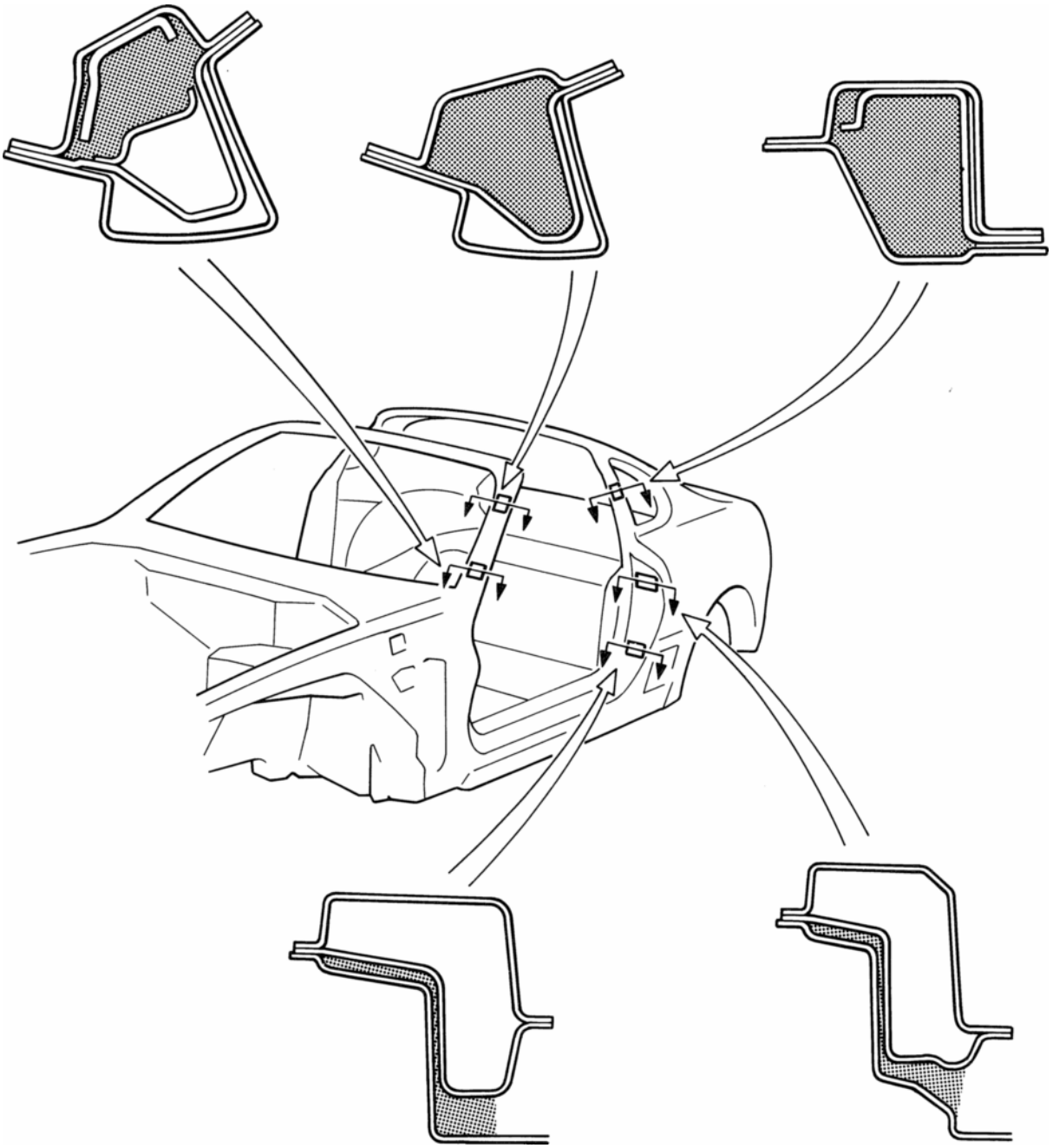

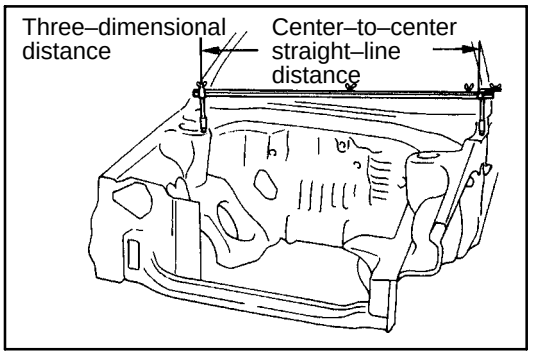

GENERAL INFORMATION

1. BASIC DIMENSIONS

(a) There are two types of dimensions in the diagram. (Three–dimensional distance)

- Straight–line distance between the centers of two measuring points.

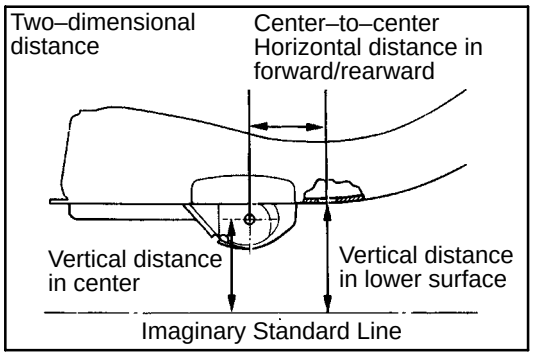

(Two–dimensional distance)

- Horizontal distance in forward/rearward between the centers of two measuring points.
- The height from an imaginary standard line.

(b) In cases in which only one dimension is given, left and right are symmetrical.

(c) The dimensions in the following drawing indicate actual distance. Therefore, please use the dimensions as a reference.

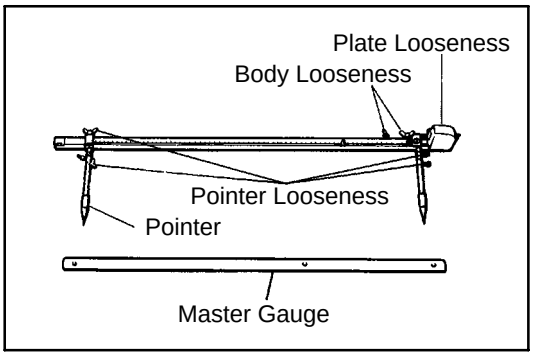

2. MEASURING

(a) Basically, all measurements are to be done with a tracking gauge. For portions where it is not possible to use a tracking gauge, a tape measure should be used.

(b) Use only a tracking gauge that has no looseness in the body, measuring plate, or pointers.

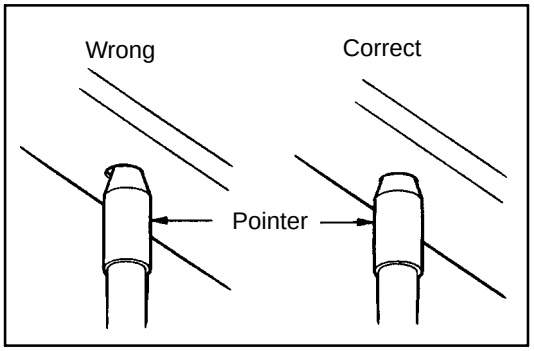

HINT:

1. *The height of the left and right pointers must be equal.*
2. *Always calibrate the tracking gauge before measuring or after adjusting the pointer height.*
3. *Take care not to drop the tracking gauge or otherwise shock it.*
4. *Confirm that the pointers are securely in the holes.*

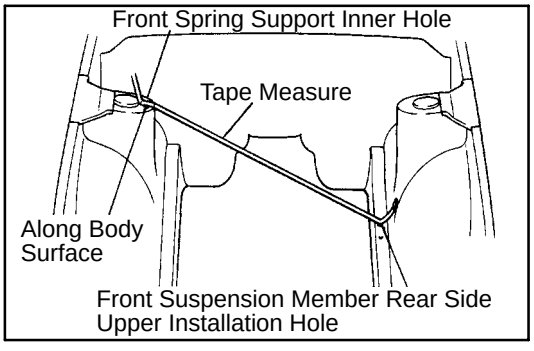

(c) When using a tape measure, avoid twists and bends in the tape.

(d) When tracking a diagonal measurement from the front spring support inner hole to the suspension member upper rear installation hole, measure along the front spring support panel surface.

BODY DIMENSION DRAWINGS

ENGINE COMPARTMENT

(Three–Dimensional Distance)

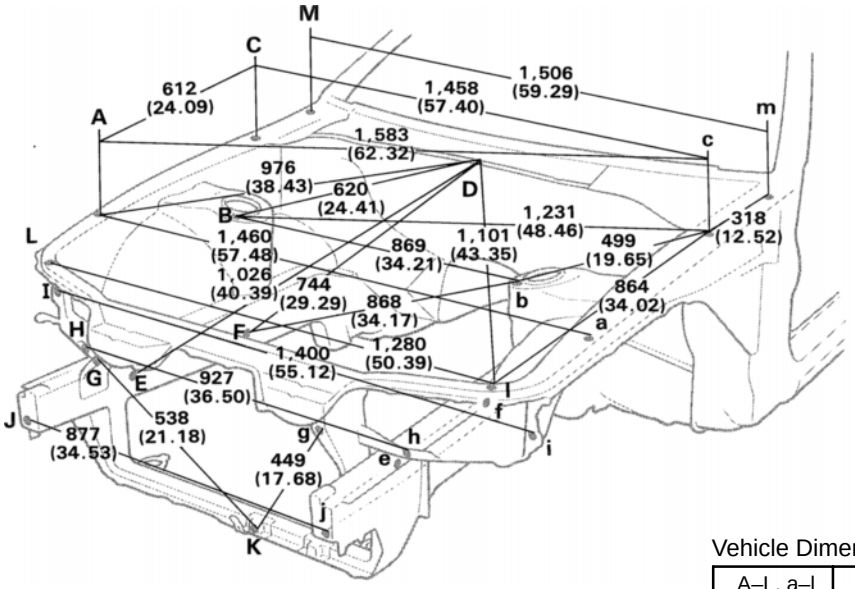

Vehicle Dimensions

A–L, a–l	C–l, c–L	G–g
263 (10.35)	1,617 (63.66)	652 (25.67)

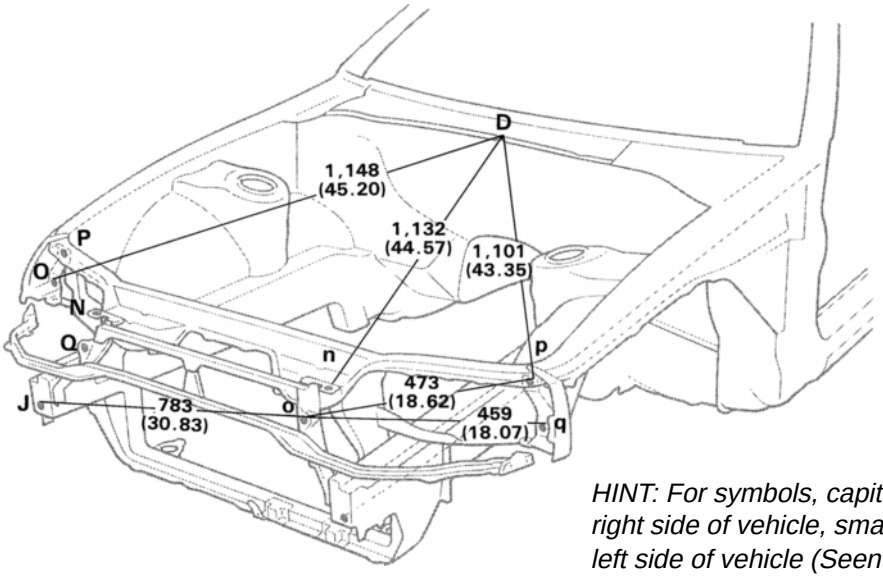

HINT: For symbols, capital letters indicate right side of vehicle, small letters indicate left side of vehicle (Seen from rear).

NO8903
NO8971

mm (in.)

Symbol	Name	Hole dia.	Symbol	Name	Hole dia.
A, a	Front fender apron standard hole	10 (0.39)	J, j	Front side member reinforcement standard hole	8 (0.31)
B, b	Front spring support hole–front	11 (0.43)	K	Cooling fan installation nut	6 (0.24) nut
C, c	Cowl top side panel standard hole	10 (0.39)	L, l	Front fender installation nut	6 (0.24) nut
D	Cowl top panel center mark	—	M, m	Hood hinge installation nut	8 (0.31) nut
E, e	Front side member working hole	18 (0.71)	N, n	Headlight installation nut	6 (0.24) nut
F, f	Front side member standard hole	13 (0.51)	O, o	Headlight installation hole	14x10.6 (0.55x0.42)
G, g	Radiator duct installation hole	7.2 (0.283)	P, p	Headlight installation hole	14x9 (0.55x0.35)
H, h	Radiator support apron brace standard hole	10 (0.39)	Q, q	Headlight installation hole	14x9 (0.55x0.35)
I, i	Apron fender side extension standard hole	9 (0.35)	—	—	—

BODY OPENING AREAS (Side View: Normal Roof)

(Three–Dimensional Distance)

NO8904

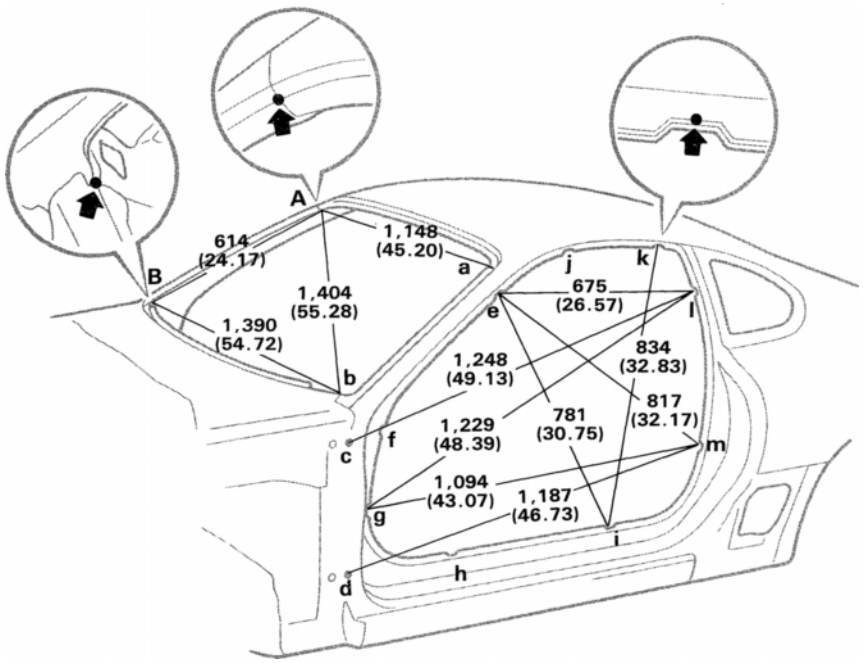

HINT: For symbols, capital letters indicate right side of vehicle, small letters indicate left side of vehicle (Seen from rear).

Vehicle Dimensions Left↔ Right

E–e	F–f	G–g	H–h	I–i
1,234 (48.58)	1,488 (58.58)	1,506 (59.29)	1,510 (59.45)	1,510 (59.45)

J–j	K–k	L–l	M–m
1,094 (43.07)	1,090 (42.91)	1,260 (49.61)	1,530 (60.24)

E–g or e–G	E–h or e–H	E–i or e–I	E–l or e–L	G–l or g–L
1,531 (60.28)	1,546 (60.87)	1,573 (61.93)	1,418 (55.83)	1,846 (72.68)

G–m or g–M	H–i or h–I	I–k or i–K	I–l or i–L	L–m or l–M
1,871 (73.66)	1,602 (63.07)	1,530 (60.24)	1,566 (61.65)	1,465 (57.68)

mm (in.)

Symbol	Name	Hole dia.	Symbol	Name	Hole dia.
A, a	Roof panel/ Front body pillar adjoining portion	—	H, h	Rocker panel reinforcement adjoining portion mark	—
B, b	Cowl top panel/ Front body pillar adjoining portion	—	I, i	Rocker panel reinforcement adjoining portion mark	—
C, c	Front door hinge installation nut	10 (0.39)nut	J, j	Roof side rail adjoining portion mark	—
D, d	Front door hinge installation nut	10 (0.39)nut	K, k	Roof side rail adjoining portion mark	—
E, e	Front body pillar adjoining portion mark	—	L, l	Quarter panel adjoining portion mark	—
F, f	Front body pillar adjoining portion mark	—	M, m	Quarter panel adjoining portion mark	—
G, g	Front body pillar adjoining portion mark	—	—	—	—

BODY OPENING AREAS
(Side View: Sport Roof)

(Three–Dimensional Distance)

HINT: For symbols, capital letters indicate right side of vehicle, small letters indicate left side of vehicle (Seen from rear).

E–g or e–G	E–h or e–H	E–i or e–I	E–l or e–L	G–l or g–L
1,545 (60.83)	1,548 (60.94)	1,538 (60.56)	1,333 (52.48)	1,846 (72.68)

J–k or j–K
568 (22.36)

G–m or g–M	H–i or h–I	I–l or i–L	J–k or j–K	L–m or l–M
1,871 (73.66)	1,602 (63.07)	1,566 (61.65)	1,227 (48.31)	1,.465 (57.68)

Vehicle Dimensions Left↔ Right

E–e	F–f	G–g	H–h	I–i
1,148 (45.20)	1,488 (58.58)	1,506 (59.29)	1,510 (59.45)	1,510 (59.45)

J–j	K–k	L–1	M–m
1,095 (43.11)	1,081 (42.56)	1,260 (49.61)	1,530 (60.24)

mm(in.)

Symbol	Name	Hole dia.	Symbol	Name	Hole dia.
A, a	Roof panel/ Front body pillar adjoining portion	—	H, h	Rocker panel reinforcement adjoining portion mark	—
B, b	Cowl top panel/ Front body pillar adjoining portion	—	I, i	Rocker panel reinforcement adjoining portion mark	—
C, c	Front door hinge installation nut	10 (0.39)nut	J, j	Weatherstrip installation hole	7.3 (0.29)
D, d	Front door hinge installation nut	10 (0.39)nut	K, k	Weatherstrip installation hole	7.3 (0.29)
E, e	Front body pillar adjoining portion mark	—	L, l	Quater panel adjoining portion mark	—
F, f	Front body pillar adjoining portion mark	—	M, m	Quater panel adjoining portion mark	—
G, g	Front body pillar adjoining portion mark	—	—	—	—

NO8905

BODY OPENING AREAS
(Rear View: Normal Roof)

(Three–Dimensional Distance)

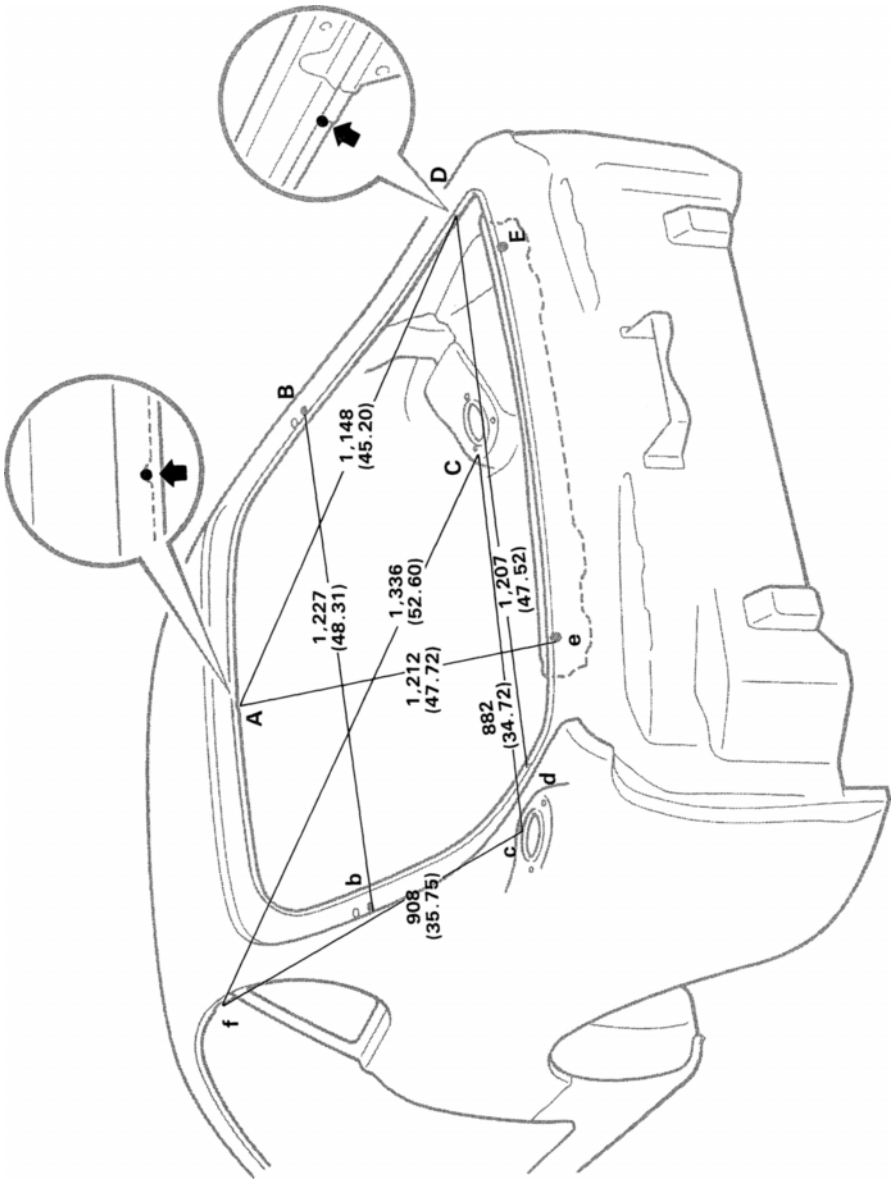

HINT: For symbols, capital letters indicate right side of vehicle, small letters indicate left side of vehicle (Seen from rear).

mm (in.)

Symbol	Name	Hole dia.	Symbol	Name	Hole dia.
A	Back door opening frame center mark	—	D, d	Back door opening trough / Quater panel adjoining portion	—
B, b	Damper stay installation hole–rear	8 (0.31)	E, e	Lower back panel reinforcement standard hole	10 (0.39)
C, c	Rear spring support hole–inner, front	9 (0.35)	F, f	Roof side rail adjoining portion mark	—

NO8906

BODY OPENING AREAS
(Rear View: Sport Roof)

(Three–Dimensional Distance)

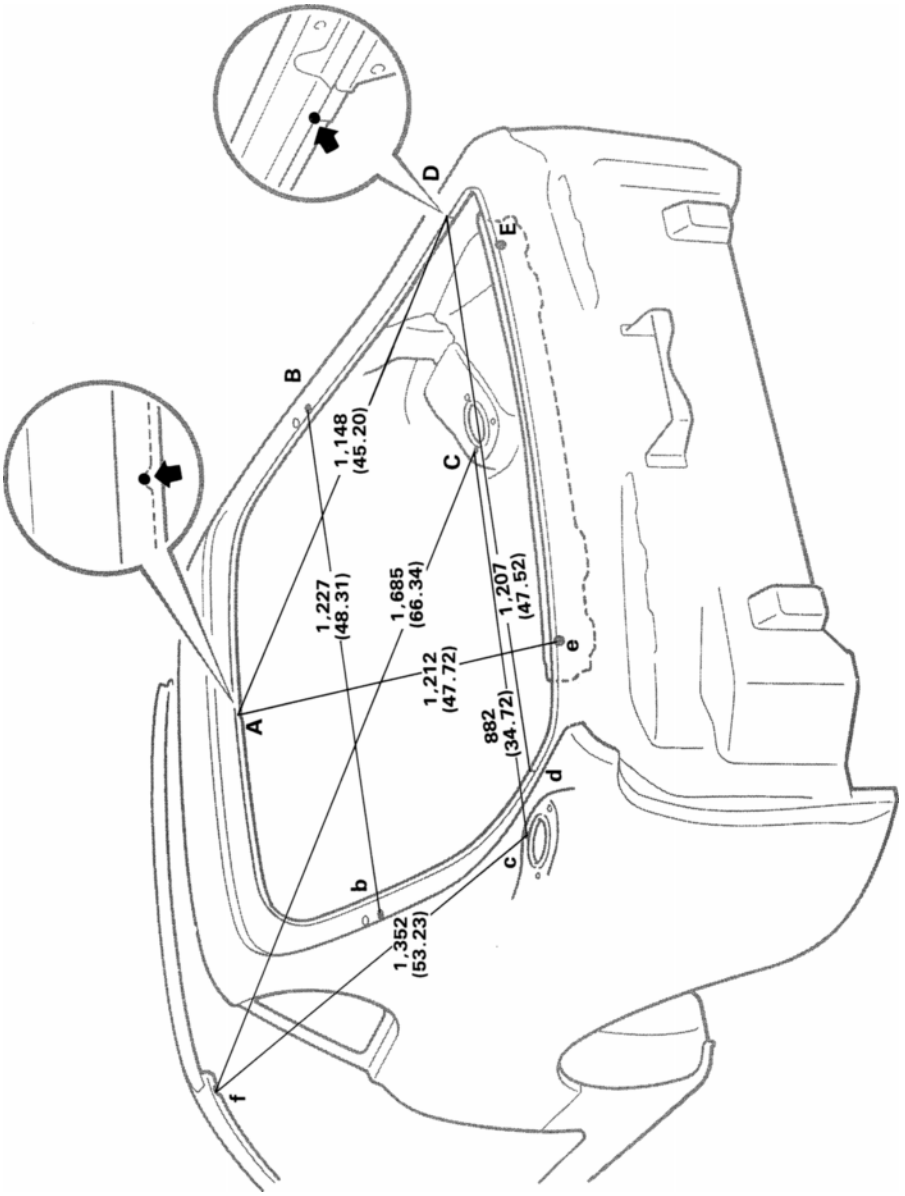

HINT: For symbols, capital letters indicate right side of vehicle, small letters indicate left side of vehicle (Seen from rear).

mm (in.)

Symbol	Name	Hole dia.	Symbol	Name	Hole dia.
A	Back door opening frame center mark	—	D, d	Back door opening trough / Quarter panel adjoining portion	—
B, b	Damper stay installation hole–rear	8 (0.31)	E, e	Lower back panel reinforcement standard hole	10 (0.39)
C, c	Rear spring support hole–inner, front	9 (0.35)	F, f	Front body pillar adjoining portion mark	—

UNDER BODY

(Three–Dimensional Distance)

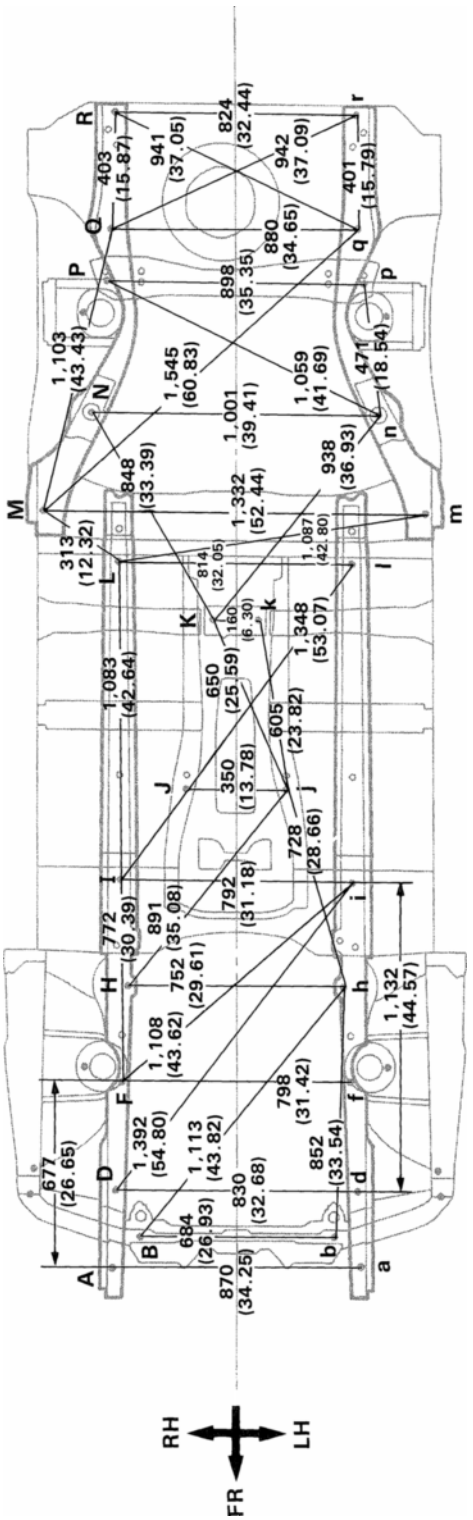

Symbol	Name	Hole dia.	Symbol	Name	Hole dia.
A, a	Font side member standard hole	7 (0.28)	L, l	Front floor reinforcement standard hole	10 (0.39)
B, b	Font crossmember working hole	9 (0.35)	M, m	Rear floor side member standard hole	18 (0.71)
D, d	Font side member standard hole	18 (0.71)	N, n	Rear suspension member installation nut	14 (0.55)nut
F, f	Font suspension crossmember installation hole	13 (0.51)	P, p	Suspension member bracket installation nut–front, outer	10 (0.39)nut
H, h	Front suspension crossmember installation nut	14 (0.55) nut	Q, q	Rear floor side member rear standard hole	18 (0.71)
I, i	Front side member standard hole	18 (0.71)	R	Tank band installation nut	10 (0.39)nut
J, j	Engine rear mounting member installation nut–front	10 (0.39) nut	r	Transport hook installation nut	12 (0. 47)nut
K, k	Propeller shaft center support bearing installation nut	10(0.39) nut	—	—	—

NO8908

UNDER BODY (Cont'd)

(Two–Dimensional Distance)

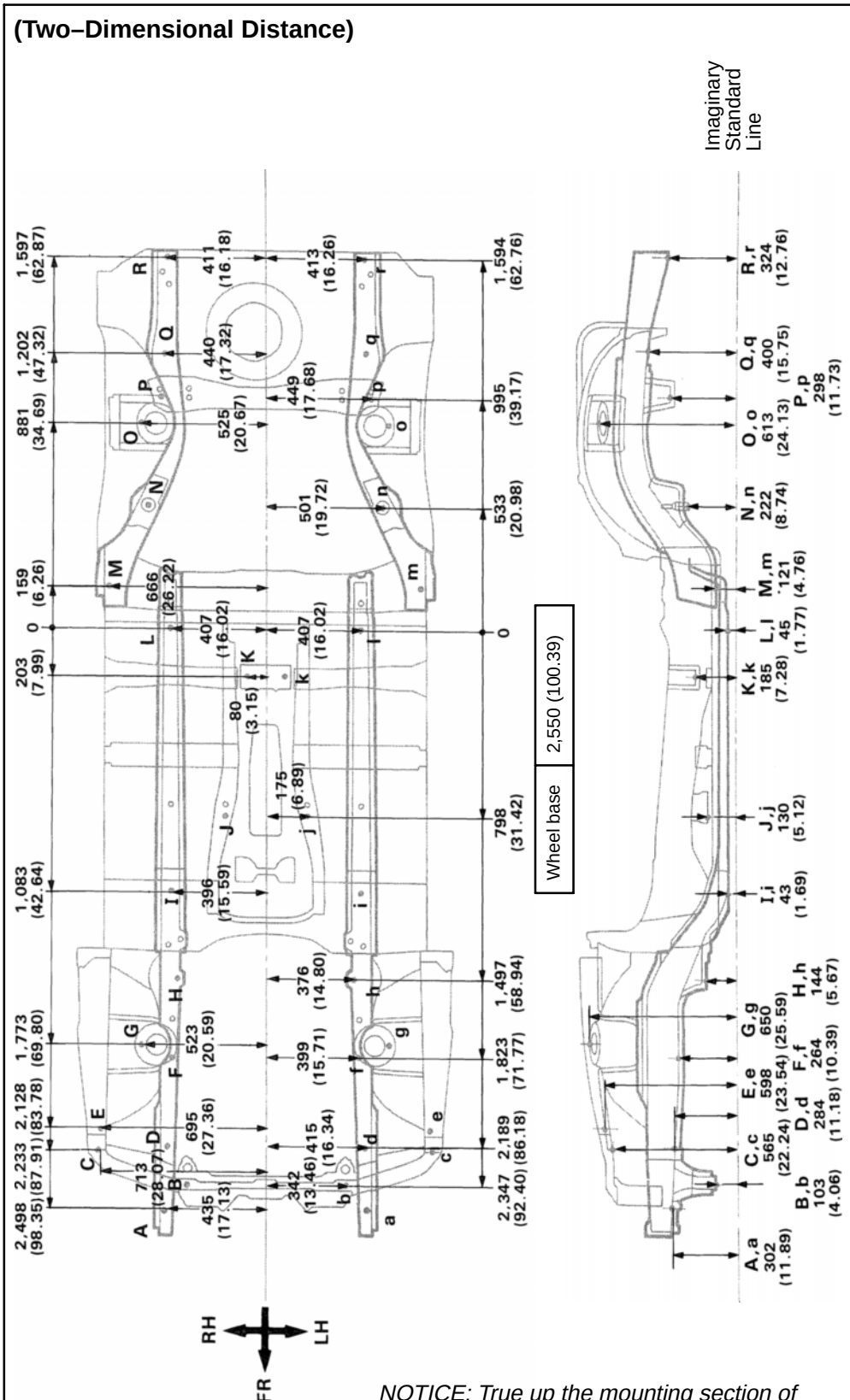

Symbol	Name	Hole dia.	Symbol	Name	Hole dia.
A, a	Front side member standard hole	7 (0.28)	K, k	Propeller shaft center support bearing installation nut	10 (0.39)nut
B, b	Front crossmember working hole	9 (0.35)	L, l	Front floor reinforcement standard bole	10 (0.39)
C, c	Front airbag sensor installation hole	9 (0.35)	M, m	Rear floor side member standard hole	18 (0.71)
D, d	Front side member standard bole	18 (0.71)	N, n	Rear suspension member installation nut	14 (0.55)nut
E, e	Front airbag sensor installation nut	8 (0.31) nut	O, o	Rear spring support hole–outer	9 (0.35)
F, f	Front suspension crossmember installation hole	13 (0.51)	P, p	Suspension member bracket installation nut–front, outer	10 (0.39)nut
G, g	Front spring support hole–outer	13 (0.51)	Q, q	Rear floor side member rear standard hole	18 (0.71)
H, h	Front suspension crossmember installation nut	14 (0.55) nut	R	Tank band installation nut	10 (0.39)nut
I, i	Front side member standard hole	18 (0.71)	r	Transport hook installation nut	12 (0.47)nut
J, j	Engine rear mounting member installation nut–front	10 (0.39) nut	—	—	—

NOTICE: True up the mounting section of the front airbag sensor very carefully and accurately so that the sensor can be mounted at the correct angle.

FRONT SUSPENSION CROSSMEMBER

(Three–Dimensional Distance)

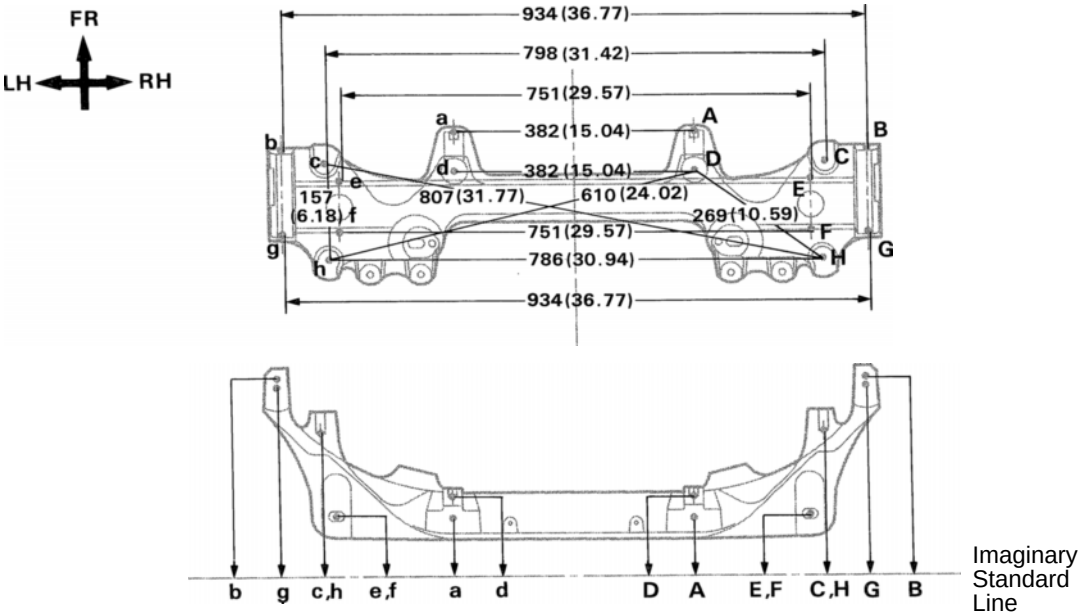

(Two–Dimensional Distance)

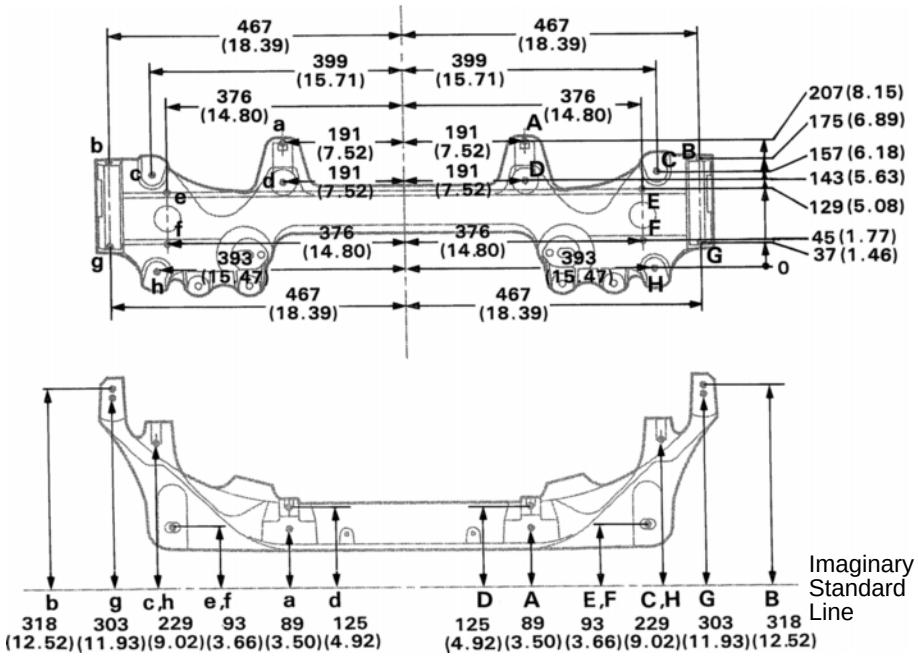

BO6850
BO6850

mm (in.)

Symbol	Name	Hole dia.	Symbol	Name	Hole dia.
A, a	Steering gear box installation hole front	12 (0.47)	E, e	Lower arm installation hole–front	25×16 (0.98×0.63)
B, b	Upper arm installation hole front	14 (0.55)	F, f	Lower arm installation hole rear	25×16 (0.98×0.63)
C, c	Suspension crossmember installation hole front–lower	15 (0.59)	G, g	Upper arm installation hole rear	14 (0.55)
D, d	Steering gear box installation hole–lower	12 (0.47)	H, h	Suspension crossmember installation hole rear–lower	RH 15×13 (0.59 x 0.51) LH 13 (0.51)

FRONT SUSPENSION CROSSMEMBER (Cont'd)

(Three–Dimensional Distance)

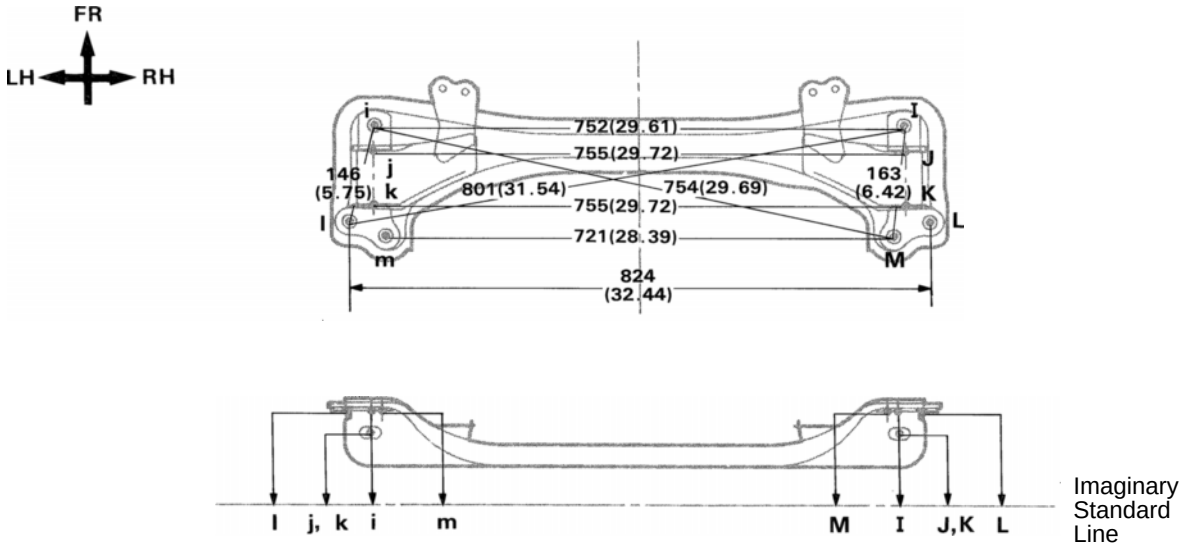

(Two–Dimensional Distance)

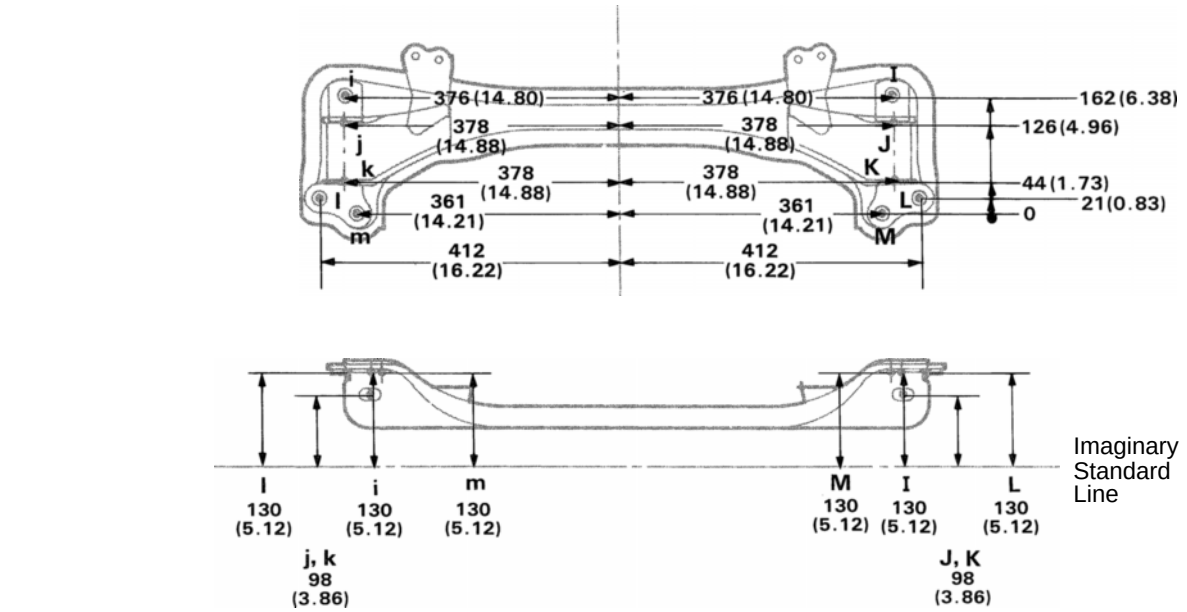

BO8851
BO6851

mm (in.)

Symbol	Name	Hole dia.	Symbol	Name	Hole dia.
I, i	Suspension crossmember installation hole front–lower	18 (0.71)	L, l	Suspension crossmember installation hole rear–lower	18 (0.71)
J, j	Lower arm installation hole–front	30×16 (1.18×0.63)	M, m	Suspension crossmember installation hole rear–lower	18 (0.71)
K, k	Lower arm installation hole rear	30×16 (1.18 x 0.63)	—	—	—

REAR SUSPENSION CROSSMEMBER

(Three–Dimensional Distance)

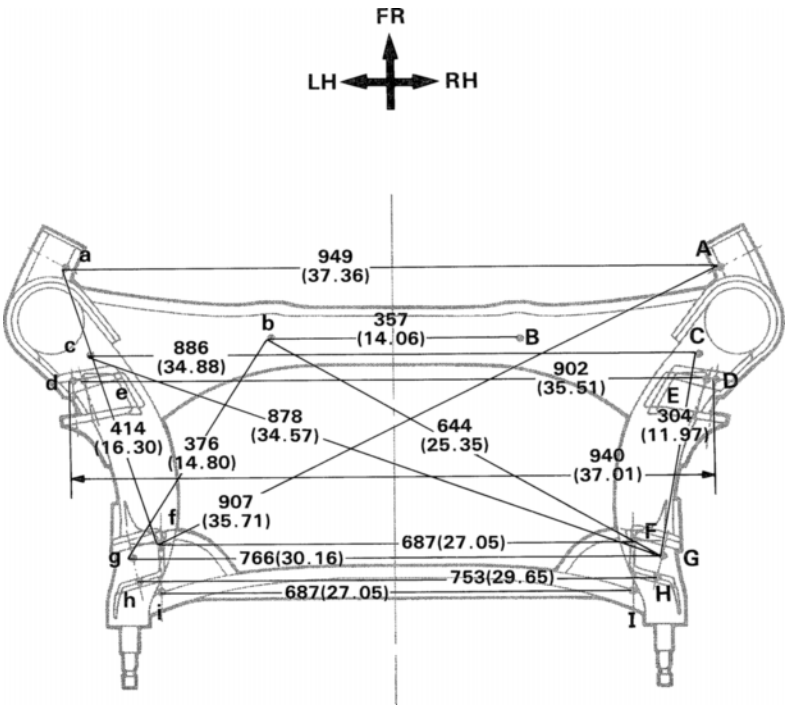

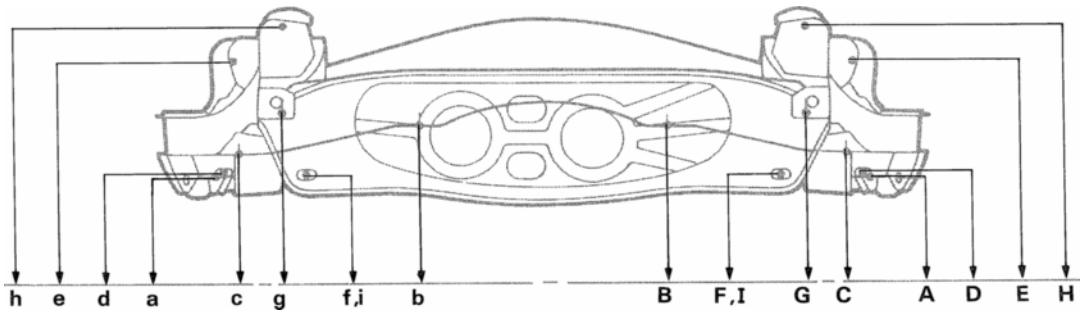

NO8909
NO8909

mm (in.)

Symbol	Name	Hole dia.	Symbol	Name	Hole dia.
A, a	Strut rod installation hole–inner	14.2 (0. 559)	F, f	No. 2 lower arm installation hole–front	26×14.2 (1.02×0.559)
B, b	Differential carrier installation nut	12 (0.47) nut	G, g	Rear suspension member standard hole	20 (0.79)
C, c	Rear suspension member standard hole	20 (0.79)	H, h	Upper arm installation hole–rear	14.2 (0.559)
D, d	No. 1 lower arm installation hole–front	26x 14.2 (1.02×0.559)	I, i	No. 2 lower arm installation hole–rear	26×14.2 (1.02×0.559)
E, e	Upper arm installation hole–front	14.2 (0.559)	—	—	—

REAR SUSPENSION CROSSMEMBER (Cont'd)

(Two–Dimensional Distance)

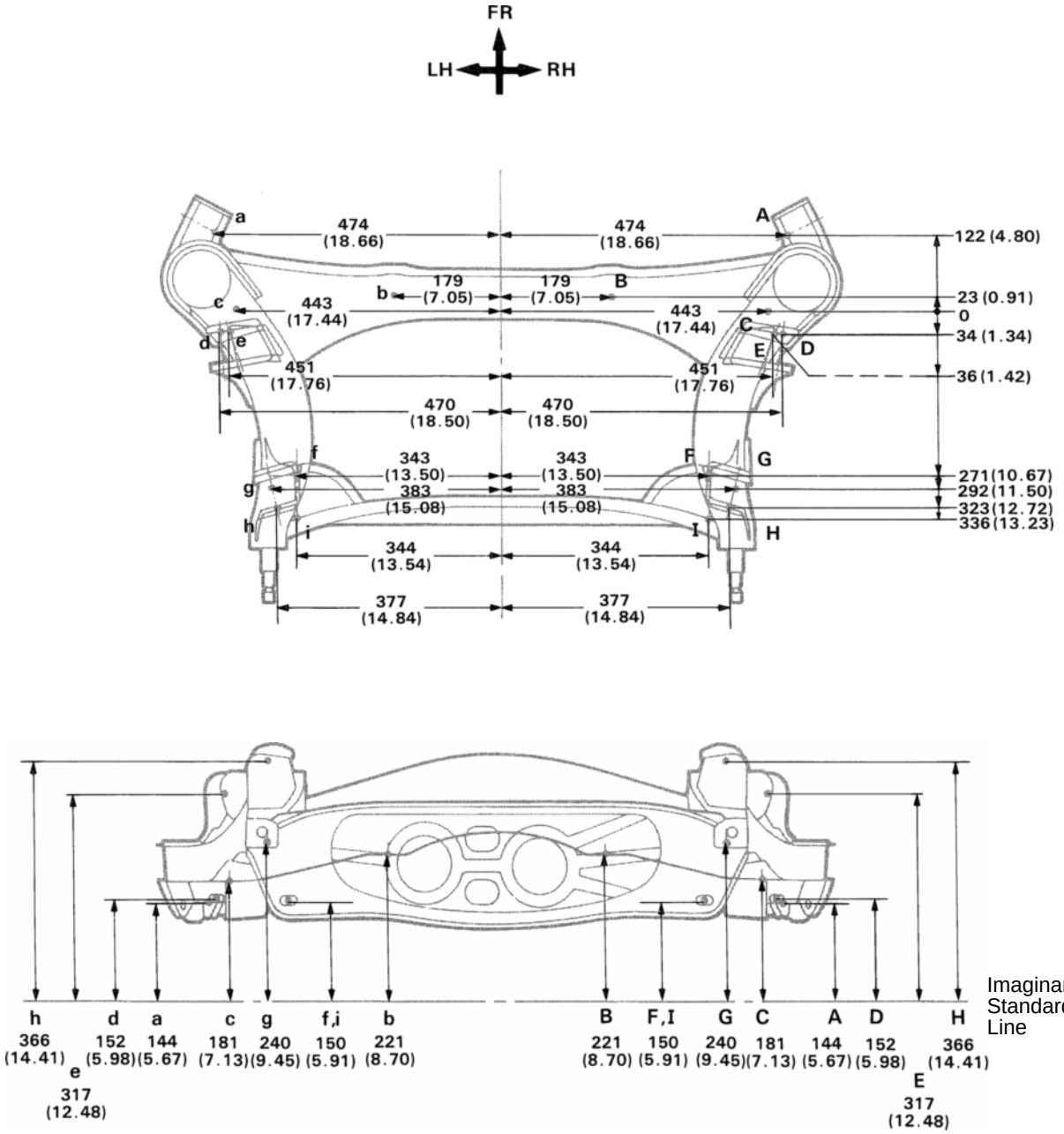

NO8909
NO8909

mm (in.)

Symbol	Name	Hole dia.	Symbol	Name	Hole dia.
A, a	Strut rod installation hole–inner	14.2 (0.559)	F, f	No. 2 lower arm installation hole–front	26×14.2 (1.02×0.559)
B, b	Differential carrier installation nut	12 (0.47) nut	G, g	Rear suspension member standard hole	20 (0.79)
C, c	Rear suspension member standard hole	20 (0.79)	H, h	Upper arm installation hole–rear	14.2 (0.559)
D, d	No. 1 lower arm installation hole–front	26×14.2 (1.02×0.559)	I, i	No. 2 lower arm installation hole–rear	26×14.2 (1.02×0.559)
E, e	Upper arm installation hole–front	14.2 (0.559)	—	—	—

COOLING SYSTEM

PREPARATION

SST (SPECIAL SERVICE TOOLS)

	09230–01010 Radiator Service Tool Set	
	09231–14010 Punch	2JZ–GE only (Aluminum type)

RECOMMENDED TOOLS

	09040–00010 Hexagon Wrench Set ◆	
	09082–00050 TOYOTA Electrical Tester Set ◆	
	09258–00030 Hose Plug Set ◆	

EQUIPMENT

Radiator cap tester	
Heater	Thermostat ECT switch (2JZ–GTE)
Thermometer	Thermostat ECT switch (2JZ–GTE)
Torque wrench	

COOLANT

Item	Capacity	Classification
Engine coolant (w/ Heater)		Ethylene–glycol base
2JZ–GE M/T	7.3 liters (7.7 US qts, 6.4 lmp. qts)	
A/T	8.3 liters (8.8 US qts, 7.3 lmp. qts)	
2JZ–GTE M/T	9.5 liters (10.0 US qts, 8.4 lmp. qts)	
A/T	9.4 liters (9.9 US qts, 8.3 lmp. qts)	

COOLANT CHECK

1. CHECK ENGINE COOLANT LEVEL AT RADIATOR RESERVOIR

The engine coolant level should be between the ”LOW” and ”FULL” lines.

If low, check for leaks and add engine coolant up to the ”FULL” line.

2. CHECK ENGINE COOLANT QUALITY

(a) Remove the radiator cap.

CAUTION: To avoid the danger of being burned, do not remove the radiator cap while the engine and radiator are still hot, as fluid and steam can be blown out under pressure.

(b) There should not be any excessive deposits of rust or scale around the radiator cap or radiator filler hole, and the coolant should be free from oil.

If excessively dirty, replace the coolant.

(c) Reinstall the radiator cap.

COOLANT REPLACEMENT

1. DRAIN ENGINE COOLANT

(a) Remove the radiator cap.

CAUTION: To avoid the danger of being burned, do not remove the radiator cap while the engine and radiator are still hot, as fluid and steam can be blown out under pressure.

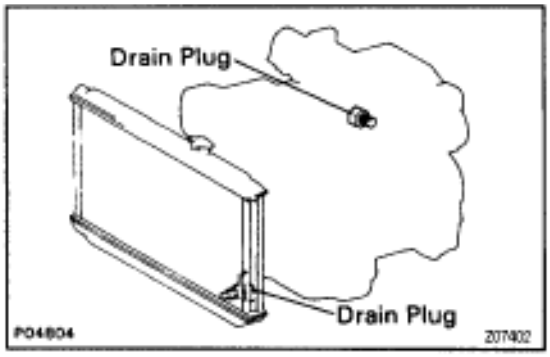

(b) Loosen the 2 drain plugs (for the engine and radiator), and drain the coolant.

(c) Close the drain plugs.

Torque:

Engine drain plug

29 N·m (300 kgf·cm, 22 ft·lbf)

2. FILL ENGINE COOLANT

(a) Slowly fill the system with coolant.

- Use a good brand of ethylene–glycol base coolant and mix it according to the manufacturer's directions.
- Using coolant which includes more than 50 % ethylene–glycol (but not more than 70 %) is recommended.

NOTICE:

- **Do not use an alcohol type coolant.**
- **The coolant should be mixed with demineralized water or distilled water.**

Capacity (w/ Heater):

2JZ–GE

M/T

7.3 liters (7.7 US qts, 6.4 lmp. qts)

A/T

8.3 liters (8.8 US qts, 7.3 lmp. qts)

2JZ–GTE

M/T

9.5 liters (10.0 US qts, 8.4 lmp. qts)

A/T

9.4 liters (9.9 US qts, 8.3 lmp. qts)

(b) Install the radiator cap.

(c) Start the engine, and bleed the cooling system.

(d) Refill the reservoir with coolant until it reaches the "FULL" line.

3. CHECK ENGINE COOLANT FOR LEAKS

WATER PUMP
COMPONENTS FOR REMOVAL AND INSTALLATION

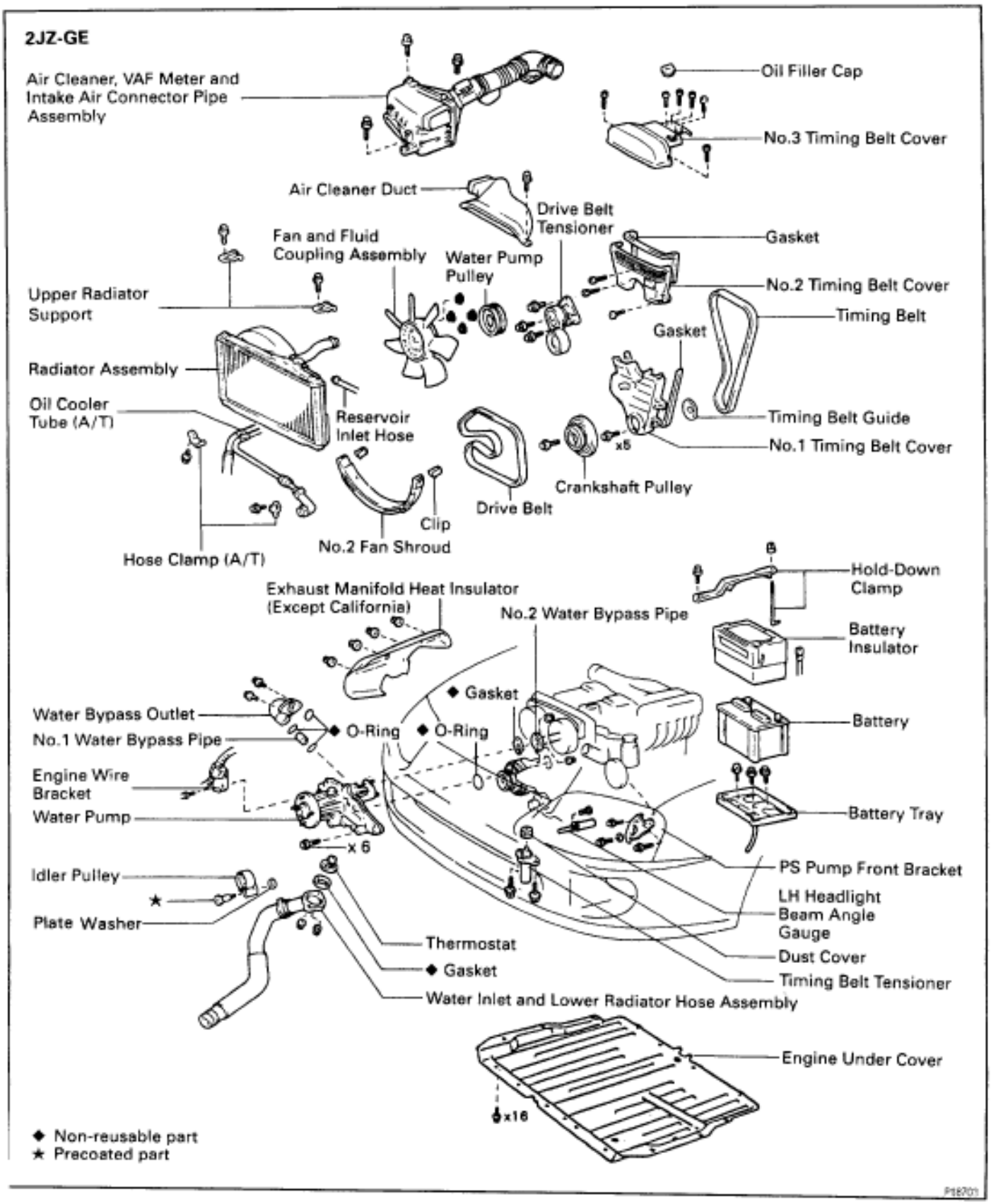

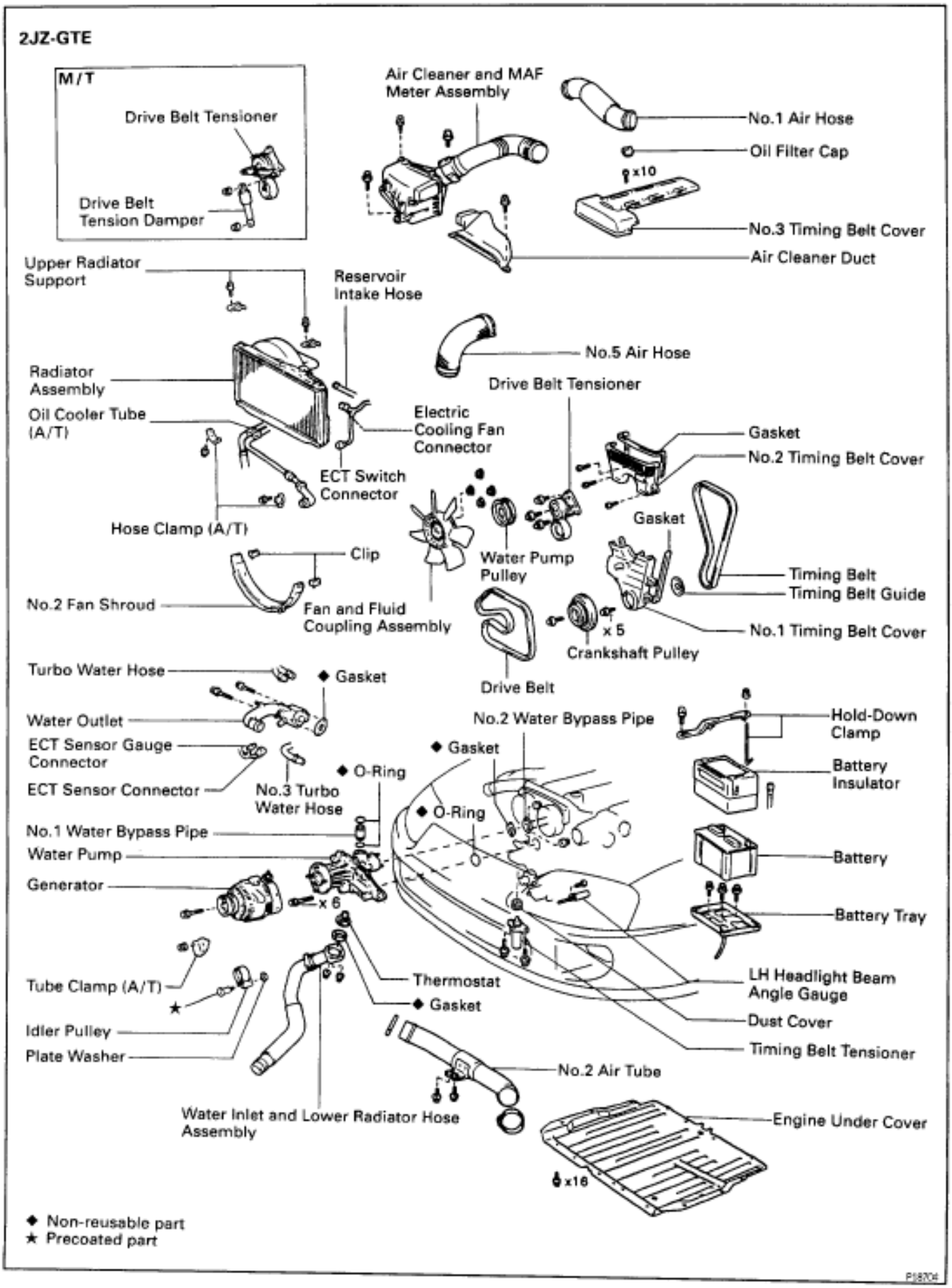
2JZ-GTE
M/T
Drive Belt Tensioner
Drive Belt Tension Damper
Air Cleaner and MAF Meter Assembly
No.1 Air Hose
Oil Filter Cap
x10
No.3 Timing Belt Cover
Air Cleaner Duct
Upper Radiator Support
Reservoir Intake Hose
No.5 Air Hose
Radiator Assembly
Oil Cooler Tube (A/T)
Electric Cooling Fan Connector
ECT Switch Connector
Drive Belt Tensioner
Gasket
No.2 Timing Belt Cover
Hose Clamp (A/T)
Clip
No.2 Fan Shroud
Fan and Fluid Coupling Assembly
Water Pump Pulley
Gasket
Timing Belt
Timing Belt Guide
No.1 Timing Belt Cover
x 5
Crankshaft Pulley
Drive Belt
Turbo Water Hose
◆ Gasket
Water Outlet
ECT Sensor Gauge Connector
ECT Sensor Connector
No.3 Turbo Water Hose
◆ O-Ring
No.2 Water Bypass Pipe
◆ Gasket
◆ O-Ring
Hold-Down Clamp
Battery Insulator
No.1 Water Bypass Pipe
Water Pump
Generator
x 6
Battery
Battery Tray
Tube Clamp (A/T)
★
Idler Pulley
Plate Washer
Thermostat
◆ Gasket
LH Headlight Beam Angle Gauge
Dust Cover
Timing Belt Tensioner
No.2 Air Tube
Water Inlet and Lower Radiator Hose Assembly
Engine Under Cover
x16
◆ Non-reusable part
★ Precoated part
P18704

WATER PUMP REMOVAL

1. 2JZ–GTE:
REMOVE NO.1 AIR HOSE

2. 2JZ–GE:
REMOVE AIR CLEANER, VAF METER AND INTAKE AIR CONNECTOR PIPE ASSEMBLY
(See step 6 in engine removal in Engine Mechanical)

3. 2JZ–GTE:
REMOVE AIR CLEANER AND MAF METER ASSEMBLY
(See step 7 in engine removal in Engine Mechanical)

4. REMOVE RADIATOR ASSEMBLY
(See radiator removal)

5. 2JZ–GTE M/T:
REMOVE DRIVE BELT TENSIONER DAMPER
(See step 2 in timing belt removal in Engine Mechanical)

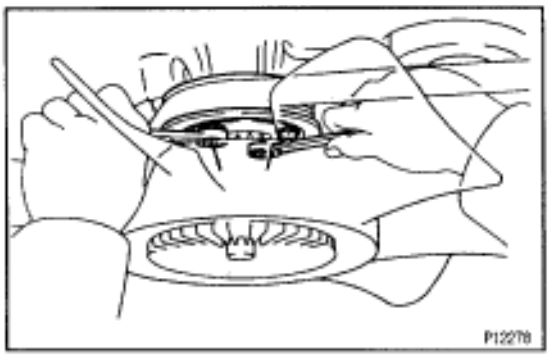

6. REMOVE DRIVE BELT, FAN, FLUID COUPLING ASSEMBLY AND WATER PUMP PULLEY

(a) Loosen the 4 nuts holding the fluid coupling to the water pump.

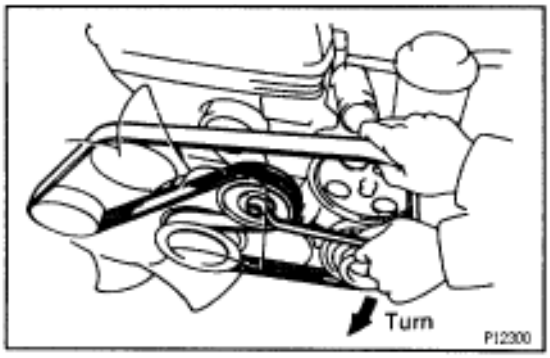

(b) Loosen the drive belt tension by turning the drive belt tensioner clockwise, and remove the drive belt.

(c) Remove the 4 nuts, the fan, fluid coupling assembly and water pump pulley.

7. REMOVE WATER INLET, LOWER RADIATOR HOSE ASSEMBLY AND THERMOSTAT
(See step 2 to 4 in thermostat removal)

8. REMOVE TIMING BELT
(See steps 4 to 15 in timing belt removal in Engine Mechanical)

9. 2JZ–GTE:
REMOVE GENERATOR
(See step 6 in generator removal in Charging System)

10. 2JZ–GE Except California:
REMOVE EXHAUST MANIFOLD HEAT INSULATOR

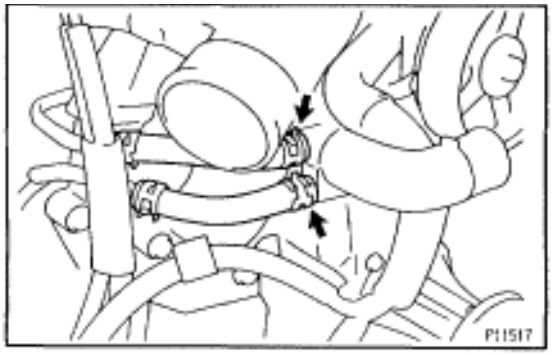

11. 2JZ–GTE:
DISCONNECT TURBO WATER HOSES FROM WATER OUTLET

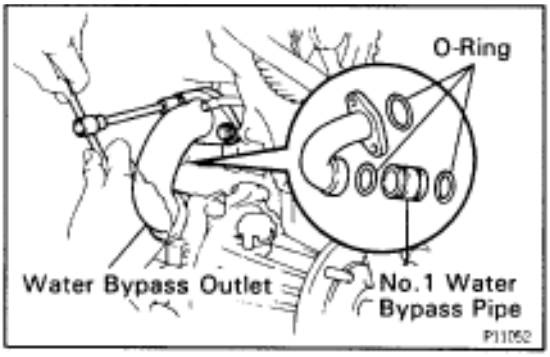

12. 2JZ–GE:
REMOVE WATER BYPASS OUTLET AND NO.1 WATER BYPASS PIPE

(a) Remove the 2 bolts, water bypass outlet and No.1 water bypass pipe.
(b) Remove the 3 O–rings from the water bypass outlet and No.1 water bypass pipe.

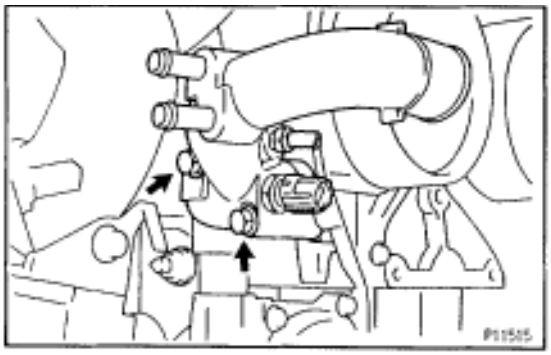

13. 2JZ–GTE:
REMOVE WATER OUTLET AND NO.1 WATER BYPASS PIPE

(a) Disconnect the ECT sensor and sender gauge connectors.
(b) Remove the 2 bolts, water outlet and gasket.

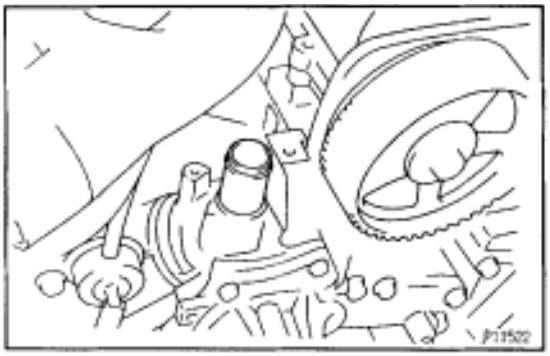

(c) Remove the No.1 water bypass pipe and 2 O–rings.

14. REMOVE IDLER PULLEY
(See steps 16 in timing belt removal in Engine Mechanical)

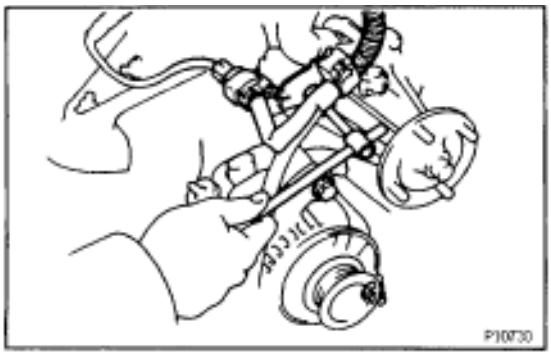

15. REMOVE WATER PUMP

(a) 2JZ–GE:
Remove the mounting bolt, and disconnect the engine wire bracket.
(b) 2JZ–GE:
Loosen the generator mounting nut.
(c) 2JZ–GE:
Remove the generator mounting bolt, and disconnect the generator from the water pump.

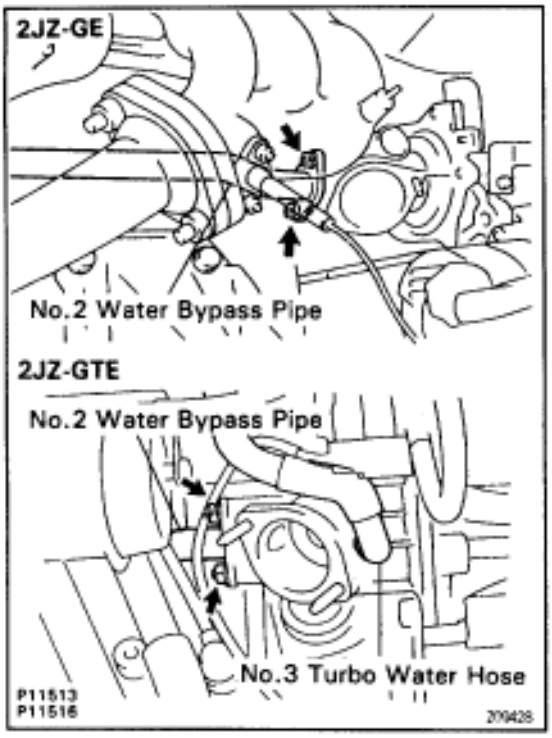

(d) Remove the 2 nuts, and disconnect the No.2 water bypass pipe from the water pump.
(e) 2JZ–GTE:
Disconnect the No.3 turbo water hose from the water pump.

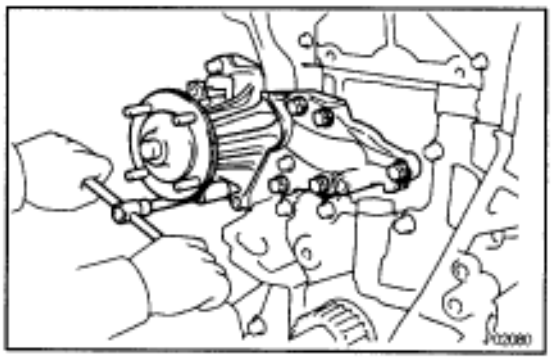

(f) Remove the 6 bolts, water pump and gasket.
(g) Remove the O–ring from the cylinder block.

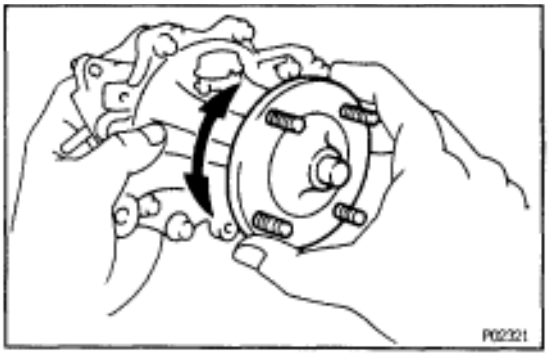

WATER PUMP COMPONENTS INSPECTION

1. INSPECT WATER PUMP

Turn the pulley seat, and check that the water pump bearing is not rough or noisy.
If necessary, replace the water pump.

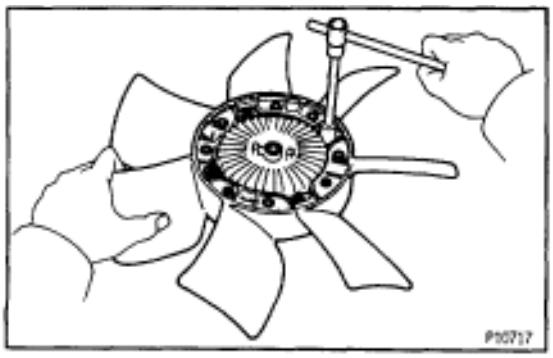

2. INSPECT FLUID COUPLING

(a) Remove the 4 nuts and fan from the fluid coupling.

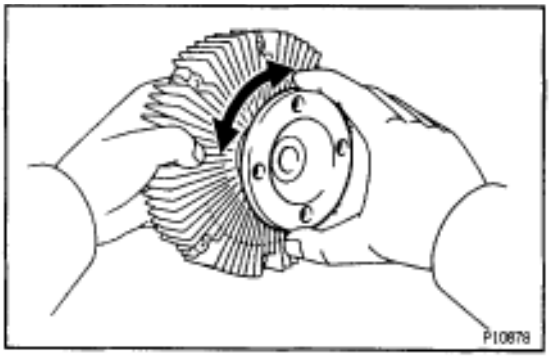

(b) Check that the fluid coupling is not damaged and that no silicon oil leaks.
If necessary, replace the fluid coupling.
(c) Reinstall the fan to the fluid coupling with the 4 nuts.
Torque: 7.4 N·m (75 kgf·cm, 65 in.·lbf)

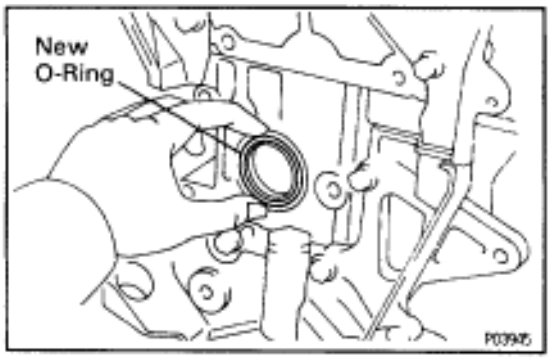

WATER PUMP INSTALLATION

1. INSTALL WATER PUMP

(a) Install a new O–ring to the cylinder block.

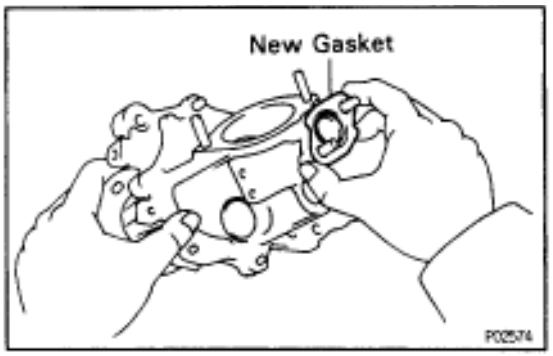

(b) Install a new gasket to the water pump.
(c) Connect the water pump to the water bypass pipe. Do not install the nut yet.

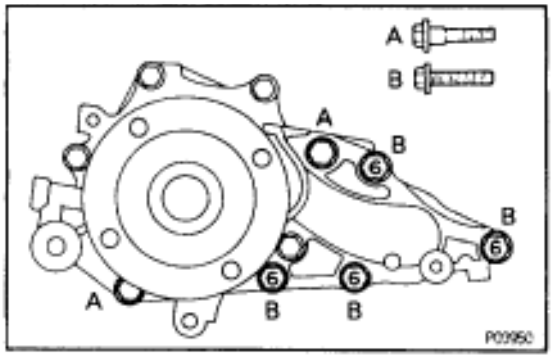

(d) Install the water pump with the 2 bolts (A) and 4 bolts (B).
Torque: 21 N·m (210 kgf·cm, 15 ft·lbf)
HINT: Hand tighten the (A) bolts first.
(e) Install the 2 nuts holding the No.2 water bypass pipe to the water pump.
Torque: 21 N·m (210 kgf·cm, 15 ft·lbf)
(f) 2JZ–GTE:
Connect the No.3 turbo water hose to the water pump.
(g) 2JZ–GE:
Install the generator mounting bolt.
Torque: 37 N·m (380 kgf·cm, 27 ft·lbf)
(h) 2JZ–GE:
Tighten the generator mounting nut.
Torque: 37 N·m (380 kgf·cm, 27 ft·lbf)
(i) 2JZ–GE:
Install the engine wire bracket with the bolt.

2. INSTALL IDLER PULLEY
(See step 2 in timing belt installation in Engine Mechanical)

3. 2JZ–GTE:
INSTALL WATER OUTLET AND NO.1 WATER BYPASS PIPE

(a) Install 2 new O–rings to the No.1 water bypass pipe.
(b) Apply soapy water to the O–rings.
(c) Install the No.1 water pass pipe to the water pump.
(d) Install a new gasket and the water outlet with the 2 bolts.
Torque: 21 N·m (210 kgf·cm, 15 ft·lbf)
(e) Connect the ECT sensor and sender gauge connectors.

4. 2JZ–GE:
INSTALL WATER BYPASS OUTLET AND NO.1 WATER BYPASS PIPE

(a) Install 2 new O–rings to the No.1 water bypass pipe.
(b) Install a new O–ring and the water bypass outlet with the 2 bolts.
Torque: 8.8 N·m (90 kgf·cm, 78 in.·lbf)

5. 2JZ–GTE:
CONNECT TURBO WATER HOSES TO WATER OUTLET

6. 2JZ–GE Except California:
INSTALL EXHAUST MANIFOLD HEAT INSULATOR

7. 2JZ–GTE:
INSTALL GENERATOR
(See generator installation in Charging System)

8. INSTALL TIMING BELT
(See steps 10 to 14 in timing belt installation in Engine Mechanical)

9. INSTALL WATER INLET AND LOWER RADIATOR HOSE ASSEMBLY
(See thermostat installation)

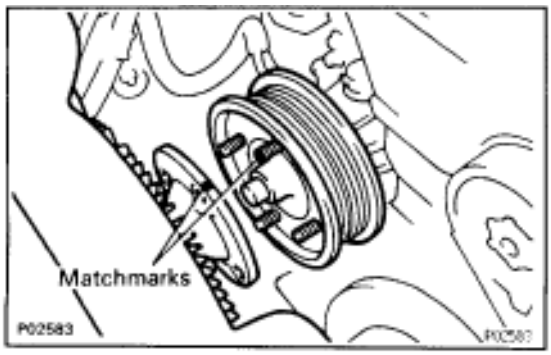

10. INSTALL WATER PUMP PULLEY, FAN, FLUID COUPLING ASSEMBLY AND DRIVE BELT

(a) Align the matchmarks, and install the water pump pulley, the fan and fluid coupling assembly with the 4 nuts.
(b) Install the drive belt by turning the drive belt tensioner clockwise.
(c) Stretch the belt tight, and tighten the 4 nuts.
Torque: 16 N·m (165 kgf·cm, 12 ft·lbf)

11. **2JZ–GTE M/T:**
    INSTALL DRIVE BELT TENSIONER DAMPER
12. **INSTALL RADIATOR ASSEMBLY**
    (See radiator installation)
13. **2JZ–GE:**
    INSTALL AIR CLEANER, VAF METER AND INTAKE AIR CONNECTOR PIPE ASSEMBLY
14. **2JZ–GTE:**
    INSTALL AIR CLEANER AND MAF METER ASSEMBLY
15. **2JZ–GTE:**
    INSTALL NO.1 AIR HOSE
16. **ROAD TEST VEHICLE**
    Check for abnormal noise, shock, slippage, correct shift points and smooth operation.

THERMOSTAT
COMPONENTS FOR REMOVAL AND INSTALLATION

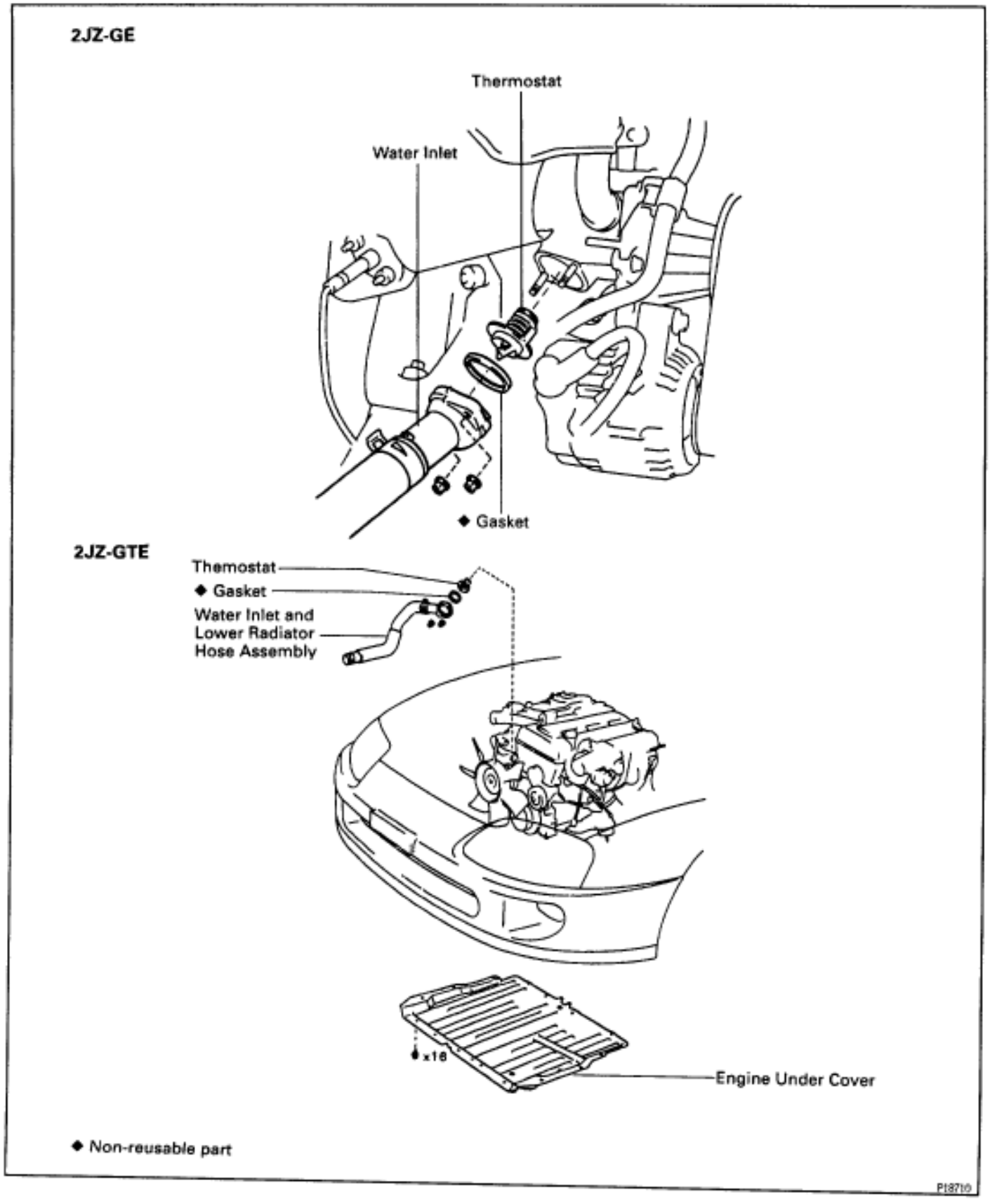

THERMOSTAT REMOVAL

HINT: Removal of the thermostat would have an adverse effect, causing a lowering of cooling efficiency.
Do not remove the thermostat, even if the engine tends to overheat.

1. 2JZ–GTE:
REMOVE ENGINE UNDER COVER

2. DRAIN ENGINE COOLANT

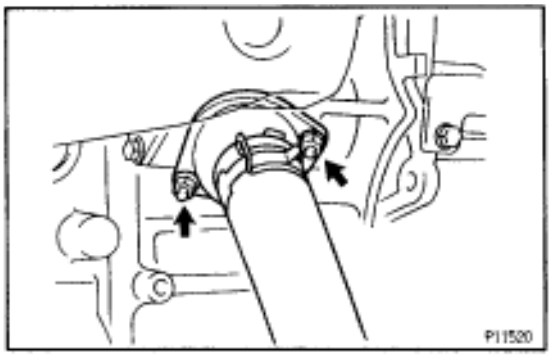

3. 2JZ–GE:
DISCONNECT WATER INLET FROM WATER PUMP, AND REMOVE THERMOSTAT

(a) Remove the 2 nuts holding the water inlet to the water pump, and disconnect the water inlet from the water pump.
(b) Remove the thermostat.
(c) Remove the gasket from the thermostat.

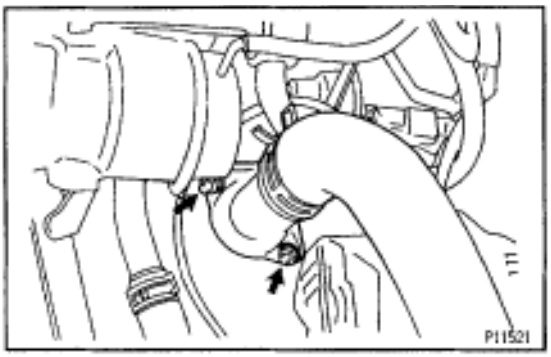

4. 2JZ–GTE:
REMOVE WATER INLET, LOWER RADIATOR HOSE ASSEMBLY AND THERMOSTAT

(a) Disconnect the lower radiator hose from the radiator.
(b) Remove the 2 nuts holding the water inlet to the water pump, and disconnect the water inlet and lower radiator hose from the water pump.
(c) Remove the thermostat.
(d) Remove the gasket from the thermostat.

THERMOSTAT INSPECTION

INSPECT THERMOSTAT

HINT: The thermostat is numbered with the valve opening temperature.

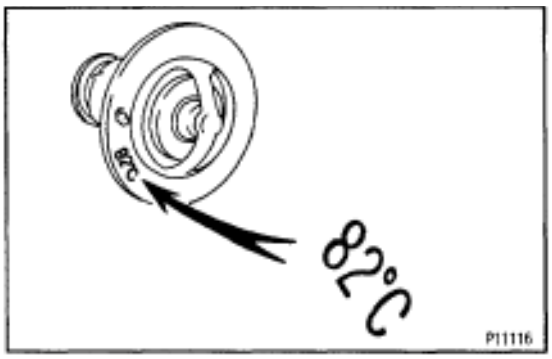

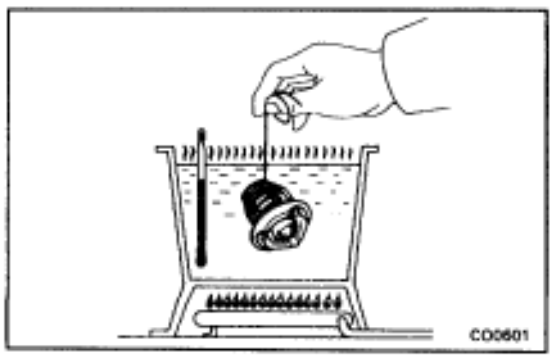

(a) Immerse the thermostat in water and gradually heat the water.
(b) Check the valve opening temperature.
Valve opening temperature:
80–84˚C (176–183˚F)
If the valve opening temperature is not as specified, replace the thermostat.

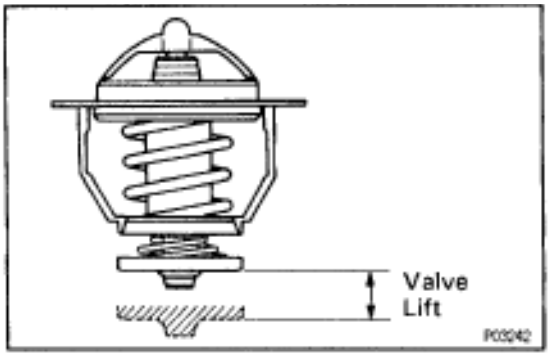

(c) Check the valve lift.
Valve lift:
8.5 mm (0.335 in.) or more at 95°C (203°F)
If the valve lift is not as specified, replace the thermostat.

(d) Check that the valve spring is tight when the thermostat is fully closed.
If not closed, replace the thermostat.

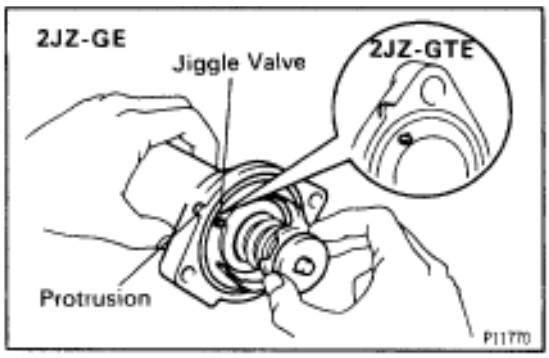

THERMOSTAT INSTALLATION

1. PLACE THERMOSTAT IN WATER INLET

(a) Install a new gasket to the thermostat.

(b) Align the jiggle valve of the thermostat with the protrusion of the water inlet.

2. INSTALL WATER INLET

(a) Install the water inlet with the 2 nuts.
Torque:
2JZ–GE
8.8 N·m (90 kgf·cm, 78 in.·lbf)
2JZ–GTE
21 N·m (210 kgf·cm, 15 ft·lbf)

(b) 2JZ–GTE:
Connect the lower radiator hose to the radiator.

3. 2JZ–GTE:
INSTALL ENGINE UNDER COVER

4. FILL WITH ENGINE COOLANT

5. START ENGINE AND CHECK FOR COOLANT LEAKS

RADIATOR

RADIATOR CLEANING

Using water or a steam cleaner, remove any mud and dirt from the radiator core.

NOTICE: If using a high pressure type cleaner, be careful not to deform the fins of the radiator core. If the cleaner nozzle pressure is 2,942–3,432 kPa (30–35 kgf/cm^2, 427–498 psi), keep a distance of at least 40 cm (15.75 in.) between the radiator core and cleaner nozzle.

RADIATOR INSPECTION

1. REMOVE RADIATOR CAP

CAUTION: To avoid the danger of being burned, do not remove the radiator cap while the engine and radiator are still hot, as fluid and steam can be blown out under pressure.

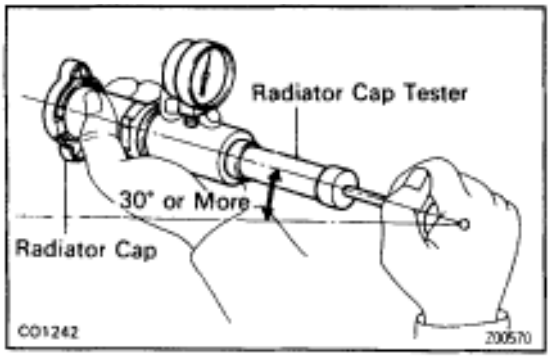

2. INSPECT RADIATOR CAP

NOTICE: When performing steps (a) and (b) below, keep the radiator pump tester at an angle of over 30° above the horizontal.

(a) Using a radiator cap tester, slowly pump the tester and check that air is coming from the relief valve.

Pump speed:

1 push/3 seconds or more

NOTICE: Push the pump at a constant speed.

If air is not coming from the relief valve, replace the radiator cap.

(b) Pump the tester several times and measure the relief valve opening pressure.

Pump speed:

1st time

1 push/1 second or less

2nd time or more

Any speed

Standard opening pressure:

93–123 kPa

(0.95–1.25 kgf/cm^2, 13.5–17.8 psi)

Minimum opening pressure:

78 kPa (0.8 kgf/cm^2, 11.4 psi)

If the opening pressure is less than minimum, replace the radiator cap.

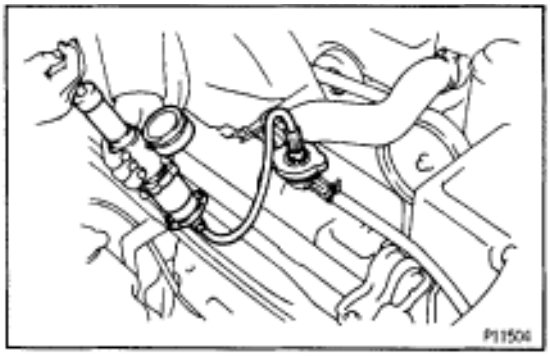

3. INSPECT COOLING SYSTEM FOR LEAKS

(a) Fill the radiator with coolant, and attach a radiator cap tester.

(b) Warm up the engine.

(c) Pump it to 147 kPa (1.5 kgf/cm^2, 21.3 psi), and check that the pressure does not drop.

If the pressure drops, check the hoses, radiator or water pump for leaks. If no external leaks are found, check the heater core, cylinder block and cylinder head.

4. REINSTALL RADIATOR CAP

COMPONENTS FOR REMOVAL AND INSTALLATION

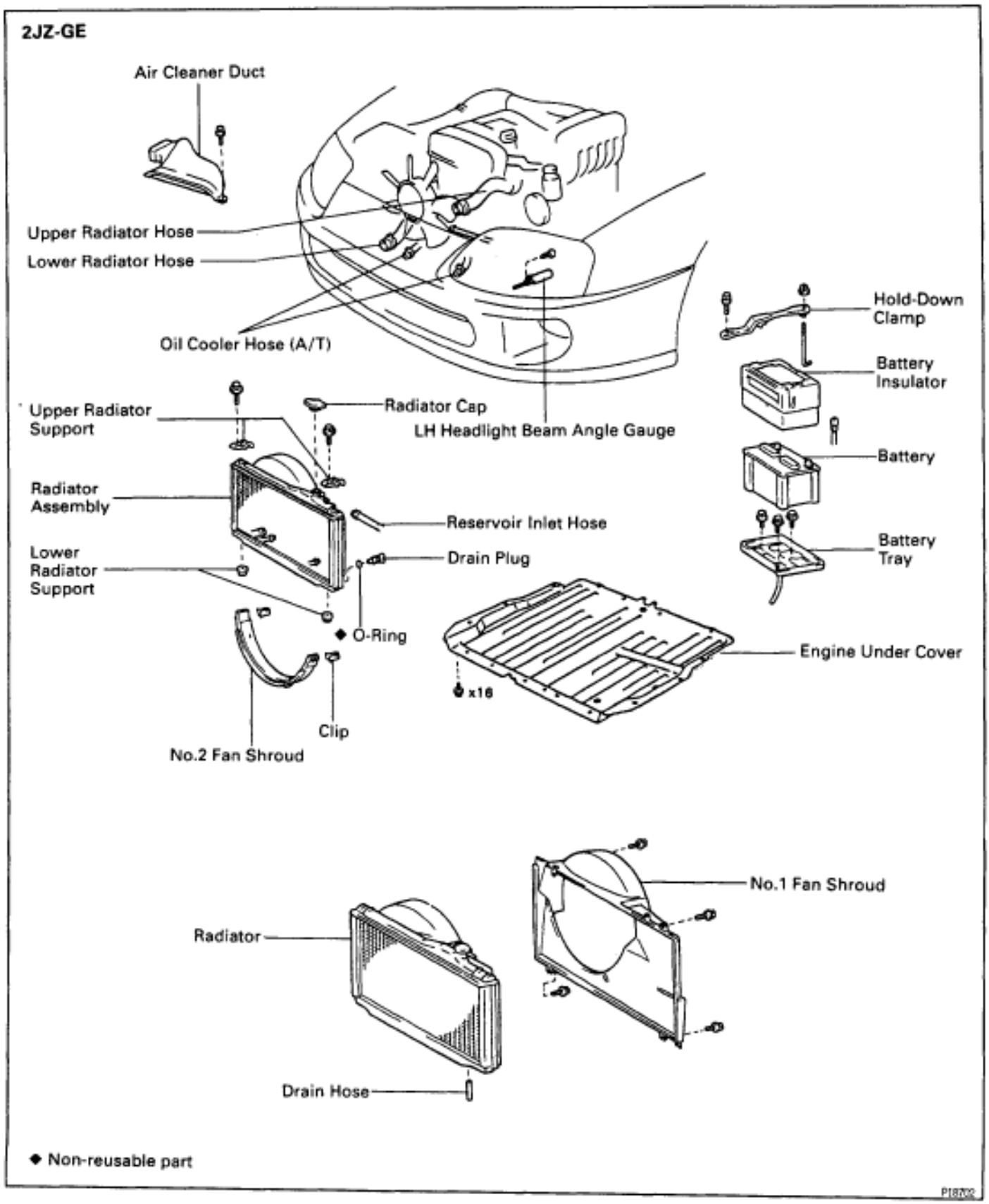

2JZ-GTE

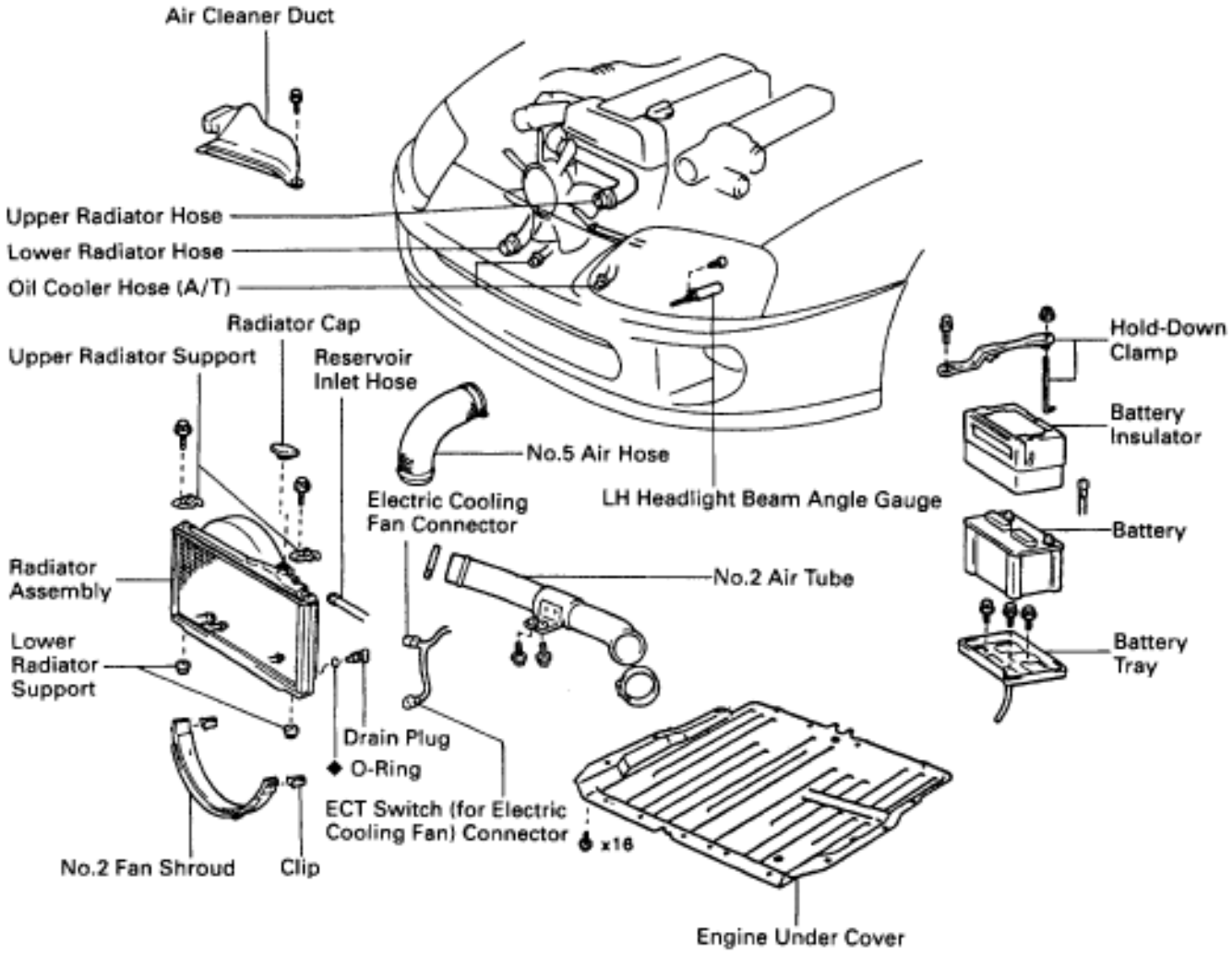

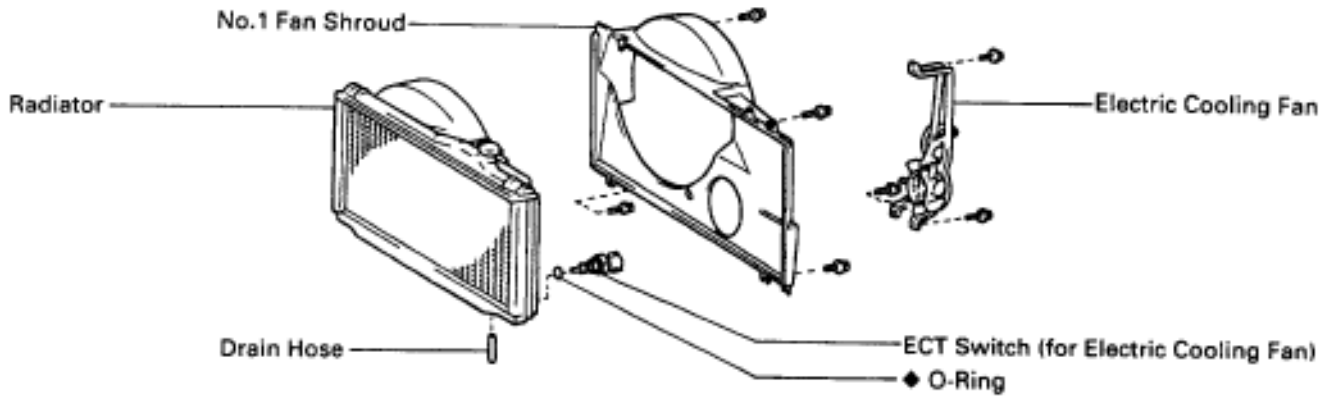

◆ Non-reusable part

P18705

RADIATOR REMOVAL

Installation is in the reverse order of removal.

1. REMOVE ENGINE UNDER COVER

INSTALLATION HINT: Start the engine, and check for coolant and A/T fluid leaks.

2. REMOVE BATTERY AND BATTERY TRAY

3. DRAIN ENGINE COOLANT

4. 2JZ–GTE:
REMOVE NO.2 AIR TUBE

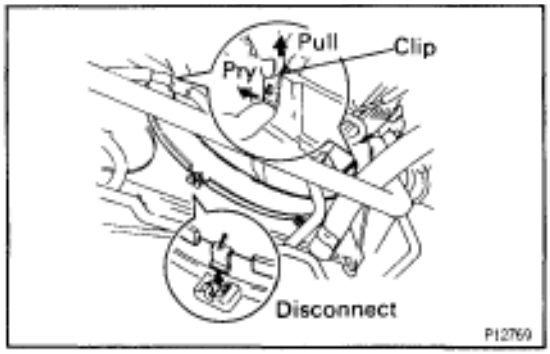

5. REMOVE NO.2 FAN SHROUD

(a) Remove the 2 clips.

(b) Disconnect the claw of the No.2 fan shroud from the hook of the No.1 fan shroud, and remove the No.2 fan shroud.

6. REMOVE AIR CLEANER DUCT

7. 2JZ–GTE:
REMOVE NO.5 AIR HOSE

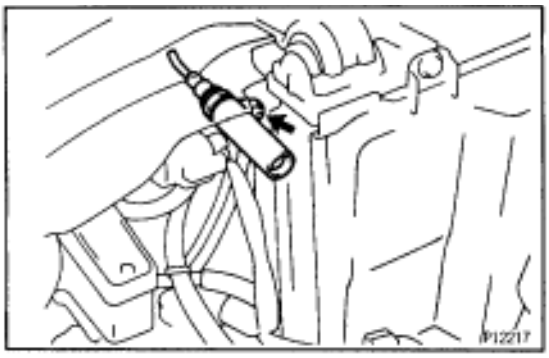

8. REMOVE LH HEADLIGHT BEAM ANGLE GAUGE

Remove the screw and beam angle gauge.

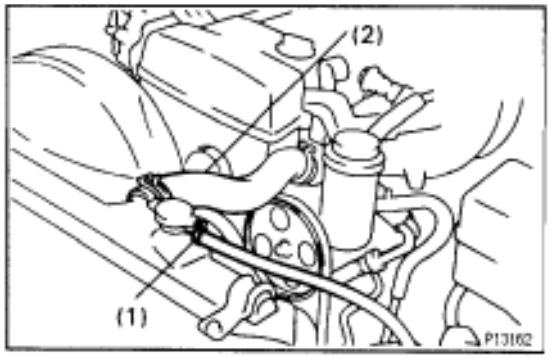

9. DISCONNECT HOSES FROM RADIATOR

Disconnect these hoses from the radiator:

(1) Reservoir inlet hose

(2) Upper radiator hose

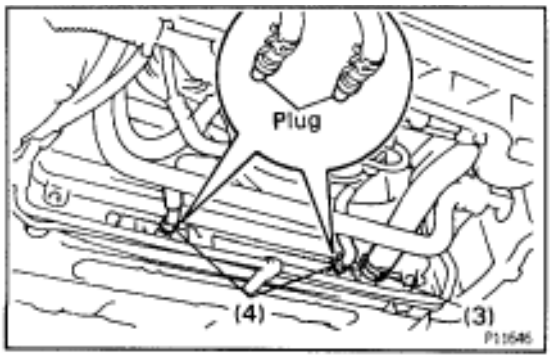

(3) Lower radiator hose

(4) A/T:
2 oil cooler hoses
Plug the hose ends.

INSTALLATION HINT: Check the A/T fluid level.
(See item 21 in Maintenance)

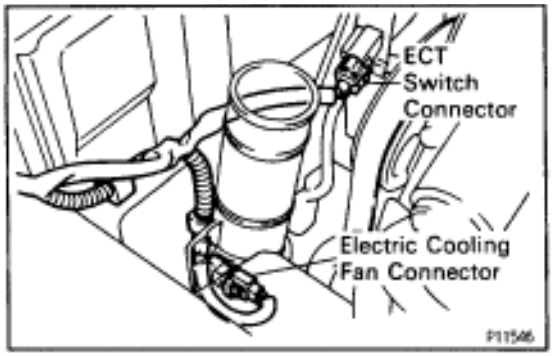

10. REMOVE RADIATOR ASSEMBLY

(a) 2JZ–GTE:
Disconnect the ECT switch (for electric cooling fan connector) and wire harness.

(b) 2JZ–GTE:
Disconnect the electric cooling fan connector and wire harness.

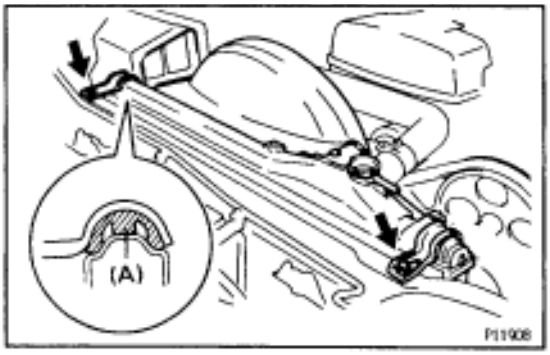

(c) Remove the bolt and upper radiator support. Remove the 2 upper radiator supports.
INSTALLATION HINT: After installation, check that the rubber cushion (A) of the support is not depressed.
Torque: 15 N·m (155 kgf·cm, 11 ft·lbf)

(d) Lift out the radiator assembly.

(e) Remove the 2 lower radiator supports.

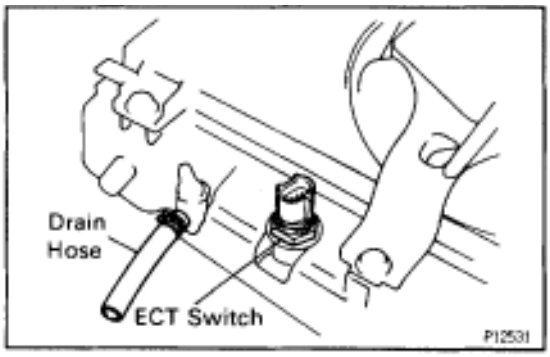

11. REMOVE DRAIN HOSE FROM RADIATOR

12. 2JZ–GTE:
REMOVE ENGINE COOLANT TEMPERATURE (ECT) SWITCH FROM RADIATOR

(a) Remove the ECT switch.
INSTALLATION HINT: Apply soapy water to the O–ring, and install the ECT switch.
Torque: 7.4 N·m (75 kgf·cm, 65 in.·lbf)

(b) Remove the O–ring from the ECT switch.
INSTALLATION HINT: Use a new O–ring.

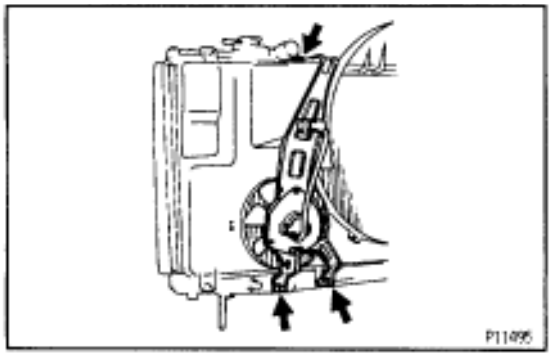

13. 2JZ–GTE:
REMOVE ELECTRIC COOLING FAN FROM RADIATOR
Remove the 3 bolts and cooling fan.

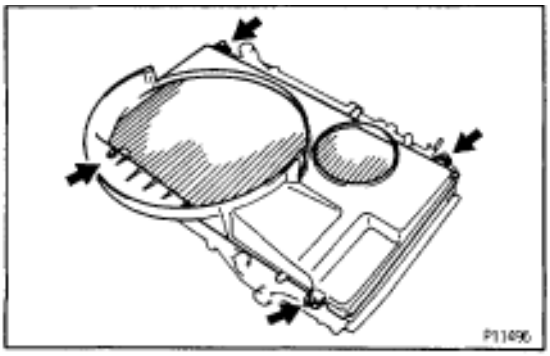

14. REMOVE NO.1 FAN SHROUD FROM RADIATOR
Remove the 4 bolts and No.1 fan shroud.

COMPONENTS FOR DISASSEMBLY AND ASSEMBLY

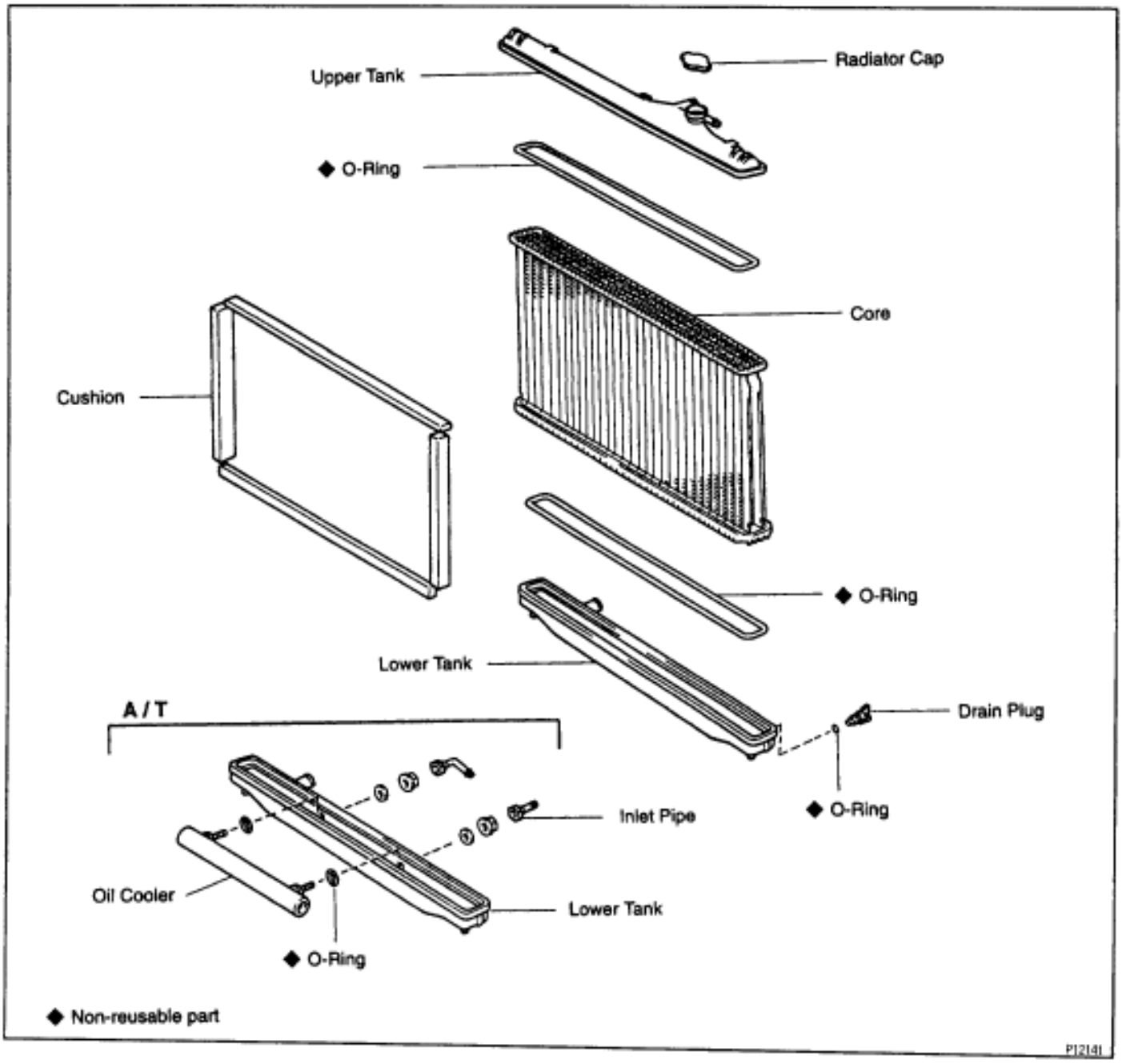

RADIATOR DISASSEMBLY

1. REMOVE CUSHIONS FROM RADIATOR

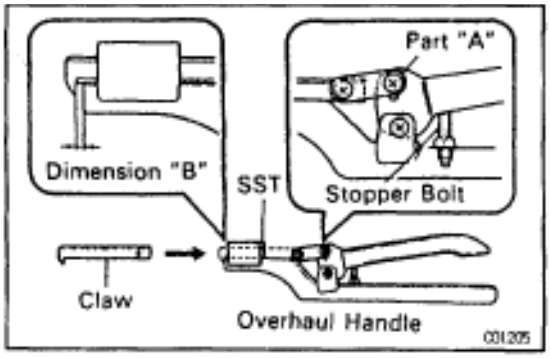

2. ASSEMBLE SST

SST 09230–01010

(a) Install the claw to the overhaul handle, inserting it in the hole in part "A" as shown in the installation.

(b) While gripping the handle, adjust the stopper bolt so that dimension "B" shown in the diagram is 0.2–0.5 mm (0.008–0.020 in.).

NOTICE: If this adjustment is not done, the claw may be damaged.

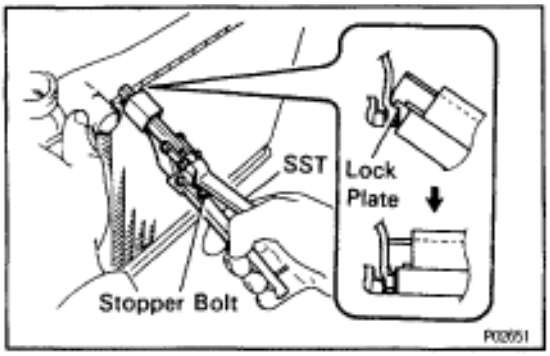

3. UNCAULK LOCK PLATES

Using SST to release the caulking, squeeze the handle until stopped by the stopper bolt.

SST 09230–01010

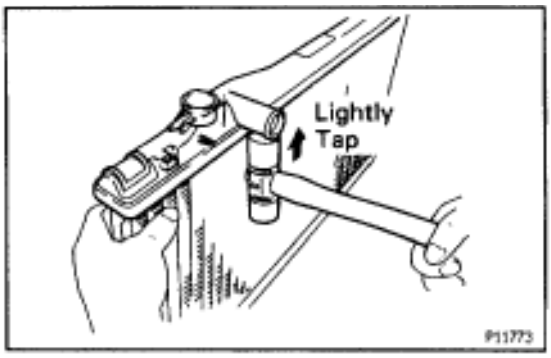

4. REMOVE TANKS AND O–RINGS

(a) Lightly tap the radiator hose inlet (or outlet) with a soft–faced hammer and remove the tank.

(b) Remove the O–ring.

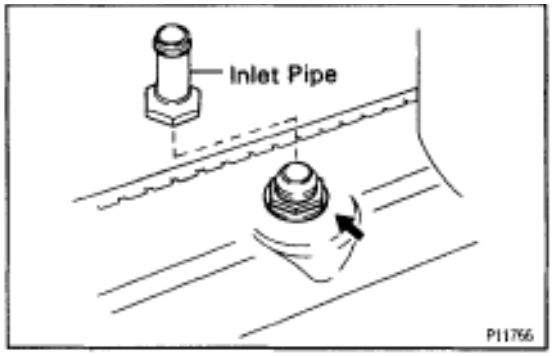

5. A/T:

REMOVE OIL COOLER FROM LOWER TANK

(a) Remove the inlet pipes.

HINT: Make a note of the direction to face the pipes.

(b) Remove the nuts, plate washers and oil cooler.

(c) Remove the O–rings from the oil cooler.

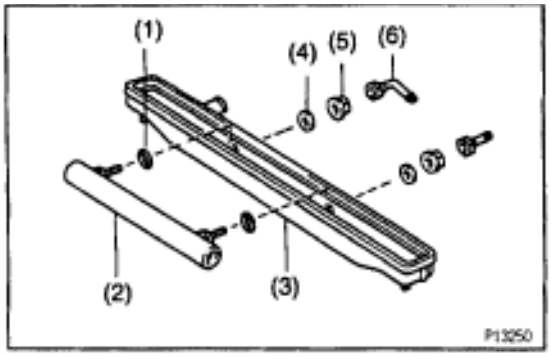

RADIATOR ASSEMBLY

1. A/T:

INSTALL OIL COOLER TO LOWER TANK

(a) Clean the O–ring contact surface of the lower tank and oil cooler.

(b) Install new O–ring (1) to the oil cooler (2).

(c) Install the oil cooler (2) to the lower tank (3).

(d) Install the plate washers (4), and nuts (5).
Torque: 8.3 N·m (85 kgf·cm, 74 in.·lbf)

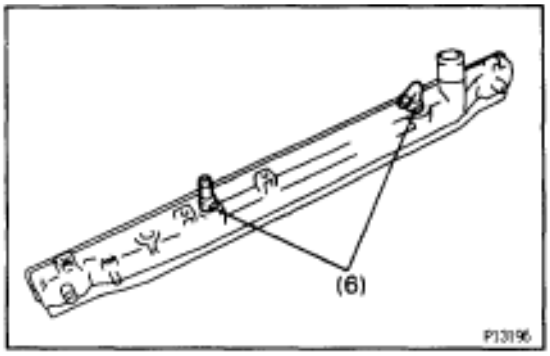

(e) Install the inlet pipes (6).
Torque: 15 N·m (150 kgf·cm, 11 ft·lbf)
HINT: Face the inlet pipes in the same direction they were before disassembly.

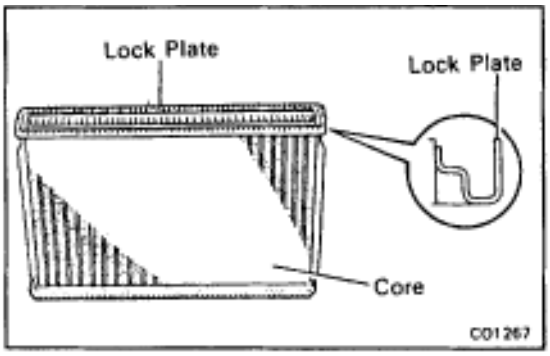

2. INSPECT LOCK PLATE

Inspect the lock plate for damage.
HINT:

- If the sides of the lock plate groove are deformed, reassembly of the tank will be impossible.
- Therefore, first correct any deformation with pliers or similar object. Water leakage will result if the bottom of the lock plate groove is damaged or dented. Therefore, repair or replace if necessary.

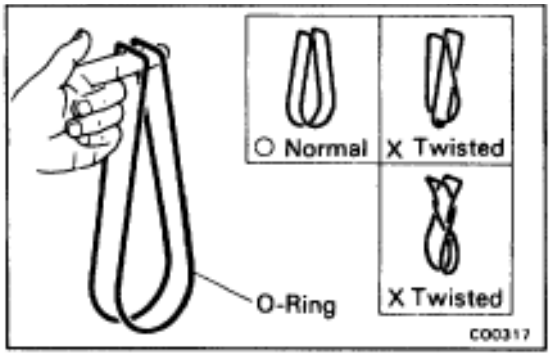

3. INSTALL NEW O–RINGS AND TANKS

(a) After checking that there are no foreign objects in the lock plate groove, install the new O–ring without twisting it.
HINT: When cleaning the lock plate groove, lightly rub it with sand paper without scratching it.

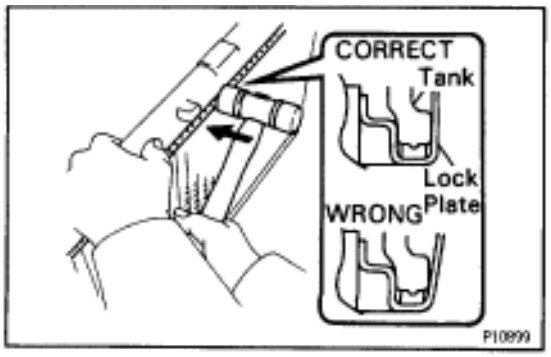

(b) Install the tank without damaging the O–ring.

(c) Tap the lock plate with a soft–faced hammer so that there is no gap between it and the tank.

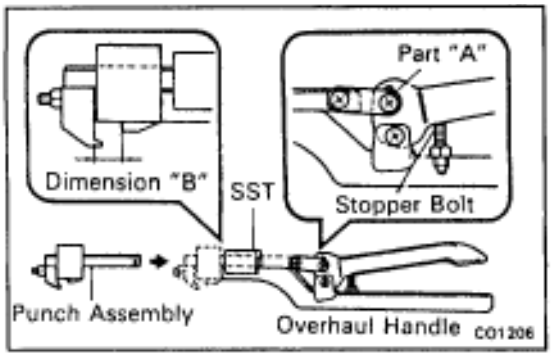

4. ASSEMBLE SST

SST 09230–01010,
09231–14010 (Punch (2JZ–GE only))

(a) Install the punch assembly to the overhaul handle, inserting it in the hole in part ”A” as shown in the illustration.

(b) While gripping the handle, adjust the stopper bolt so that dimension ”B” shown in the diagram.

Dimension ”B”:

2JZ–GE

8.4 mm (0.34 in)

2JZ–GTE

7.7 mm (0.31 in)

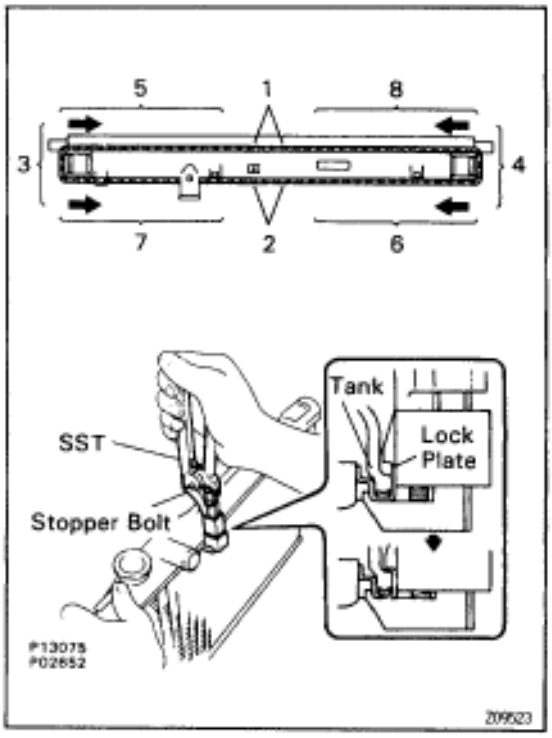

5. CAULK LOCK PLATE

(a) Lightly press SST against the lock plate in the order shown in the illustration. After repeating this a few times, fully caulk the lock plate by squeezing the handle until stopped by the stopper plate.

SST 09230–01010

HINT:

- Do not stake the areas protruding around the pipes, brackets or tank ribs.

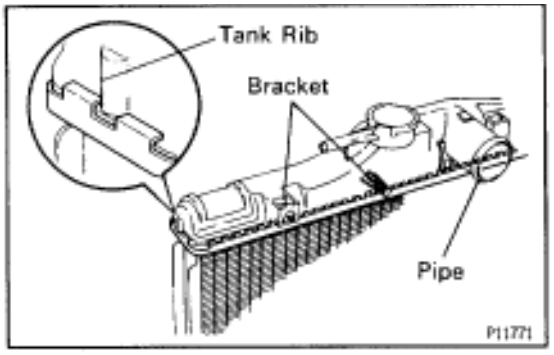

- The points shown in the rib sides and oil cooler near here cannot be staked with SST. Use a plier or similar object and be careful not to damage the core plates.

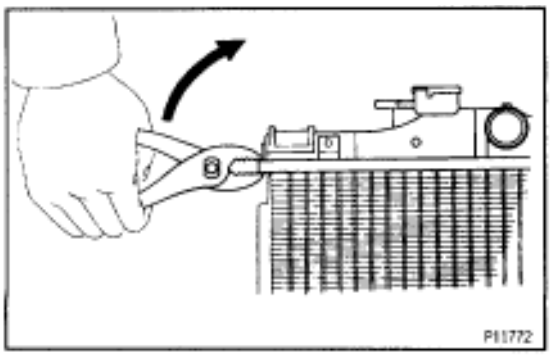

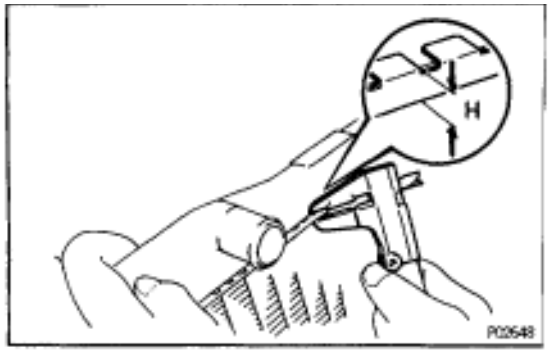

(b) Check the lock plate height (H) after completing the caulking.
Plate height:
2JZ–GE
7.40–7.80 mm (0.2959–0.3119 in)
2JZ–GTE
7.76–8.24 mm (0.3055–0.3244 in.)
If not within the specified height, adjust the stopper bolt of the handle again and caulk again.

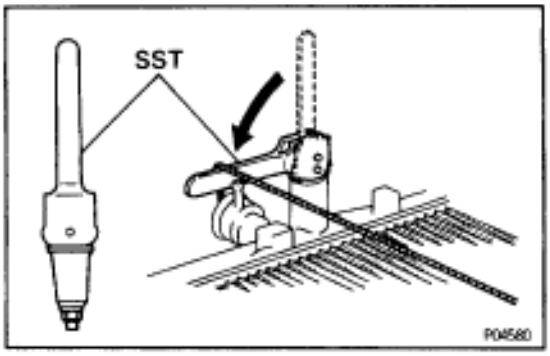

6. INSPECT FOR WATER LEAKS

(a) Tighten the drain plug.

(b) Plug the inlet and outlet pipes of the radiator with SST.
SST 09230–01010

(c) Using a radiator cap tester, apply pressure to the radiator.
Test pressure:
177 kPa (1.8 kgf/cm^2, 26 psi)

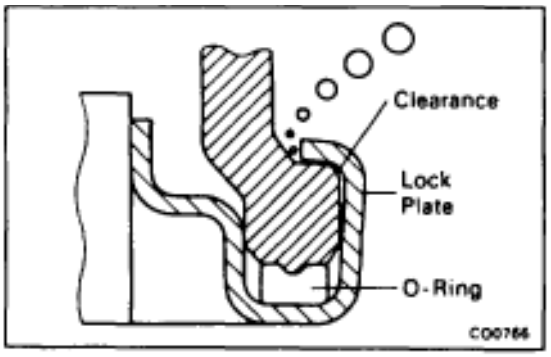

(d) Inspect for water leaks.
HINT: On radiators with resin tanks, there is a clearance between the tank and lock plate where a minute amount of air will remain, giving the appearance of an air leak when the radiator is submerged in water. Therefore, before doing the water leak test, move the radiator around in the water until all air bubbles disappear.

7. PAINT LOCK PLATES
HINT: If the water leak test checks out okay, allow the radiator to completely dry and then paint the lock plates.

8. INSTALL CUSHIONS TO RADIATOR

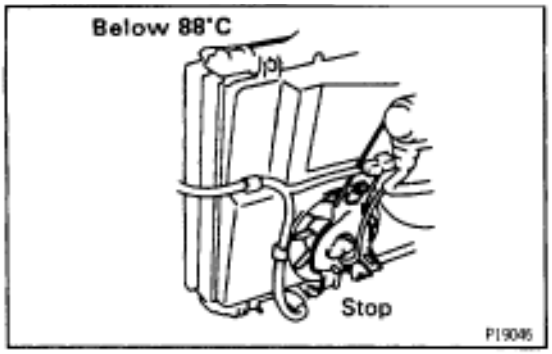

ELECTRIC COOLING FAN (2JZ–GTE)

On–Vehicle Inspection

1. CHECK COOLING FAN OPERATION WITH LOW TEMPERATURE (Below 88˚C (190˚F))

(a) Turn the ignition switch ON.

(b) Check that the cooling fan stops.
If not, check the cooling fan relay and ECT switch, and check for a separated connector or severed wire between the No.1 radiator fan relay and ECT switch.

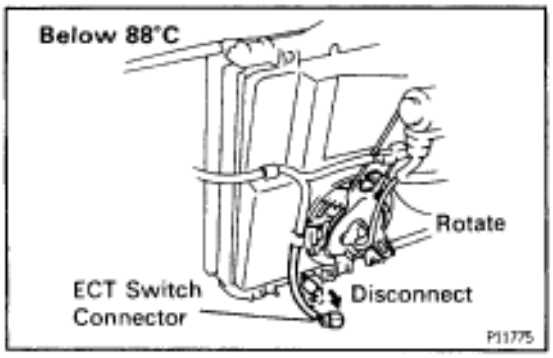

(c) Disconnect the ECT switch connector.

(d) Check that the cooling fan rotates.
If not, check the No.1 radiator relay, No.2 radiator fan relay, cooling fan, fuses, and check for short circuit between the No.1 radiator fan relay and ECT switch.

(e) Reconnect the ECT switch connector.

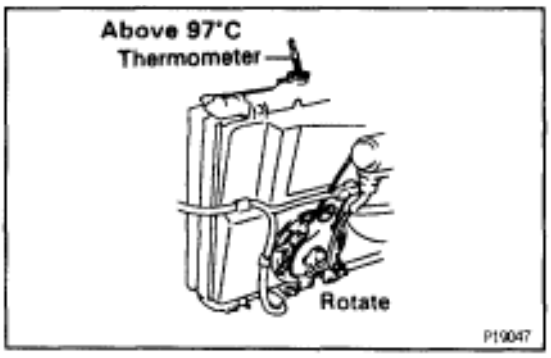

2. CHECK COOLING FAN OPERATION WITH HIGH TEMPERATURE (Above 97˚C (207˚F))

(a) Start the engine, and raise coolant temperature to above 97˚C (207˚F).

(b) Check that the cooling fan rotates.
If not, replace the ECT switch.

Cooling Fan
COMPONENTS FOR REMOVAL AND INSTALLATION

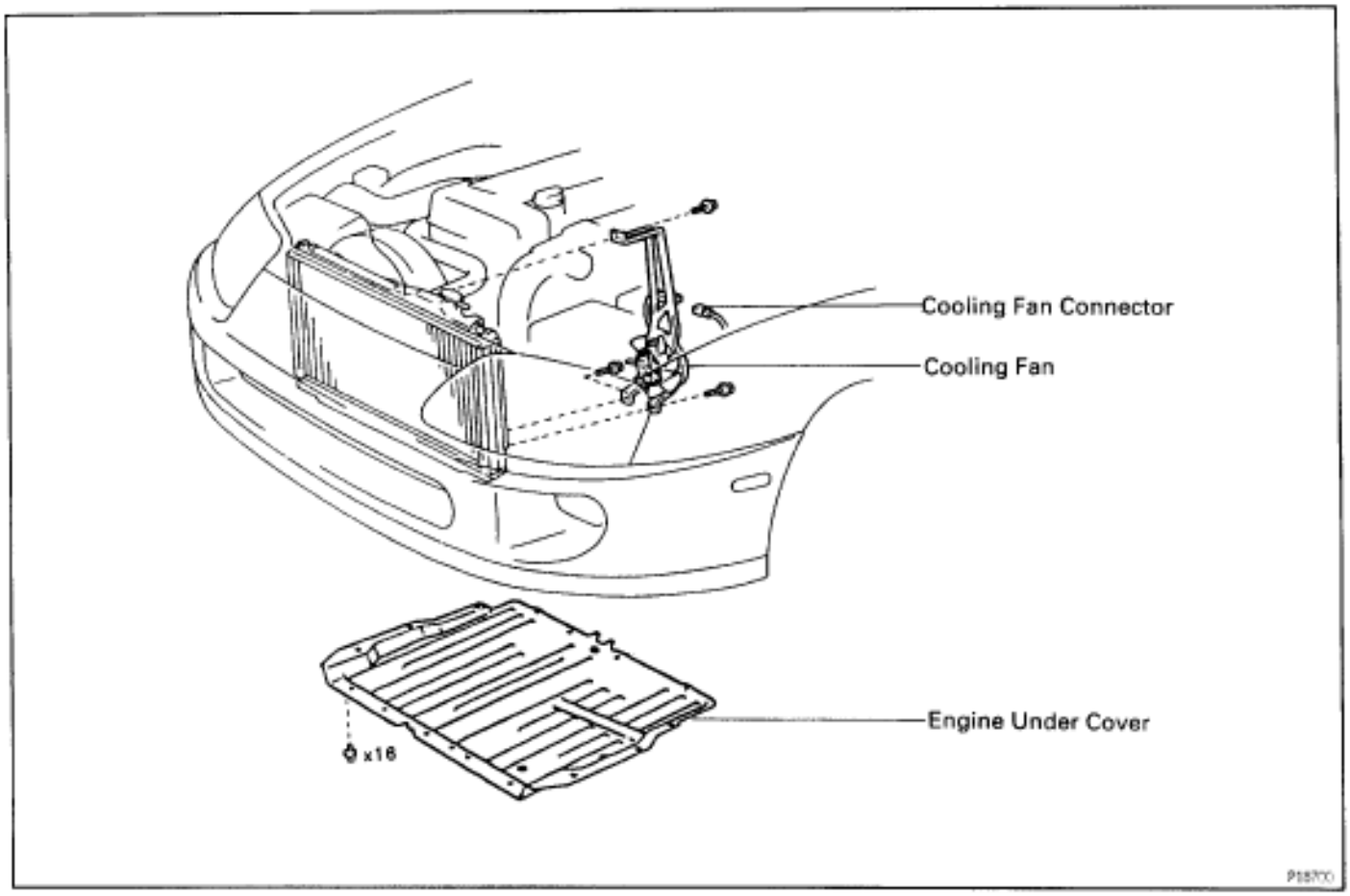

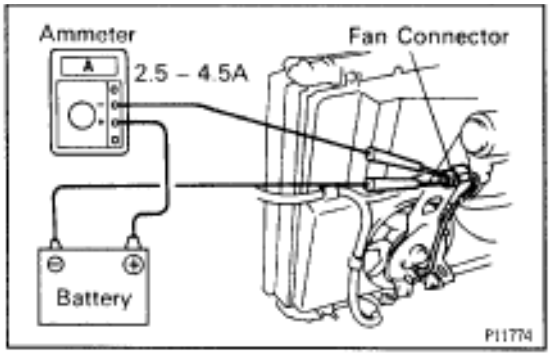

COOLING FAN INSPECTION

INSPECT COOLING FAN

(a) Disconnect the fan connector.
(b) Connect battery and ammeter to the cooling fan connector.
(c) Check that the cooling fan rotates smoothly, and check the reading on the ammeter.

Standard amperage:

2.5–4.5 A

(d) Reconnect the fan connector.

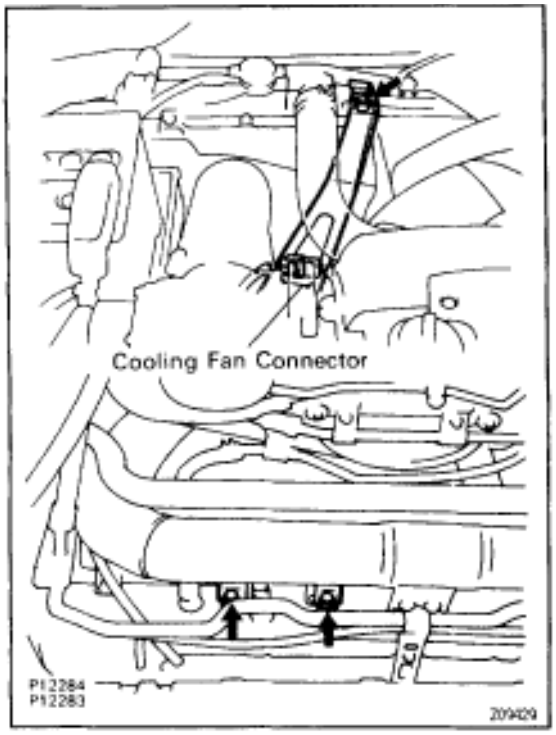

COOLING FAN REMOVAL

Installation is in the reverse order of removal.

1. REMOVE ENGINE UNDER COVER

2. REMOVE COOLING FAN

(a) Disconnect the cooling fan connector.

(b) Remove the 3 bolts and cooling fan.

COMPONENTS FOR DISASSEMBLY AND ASSEMBLY

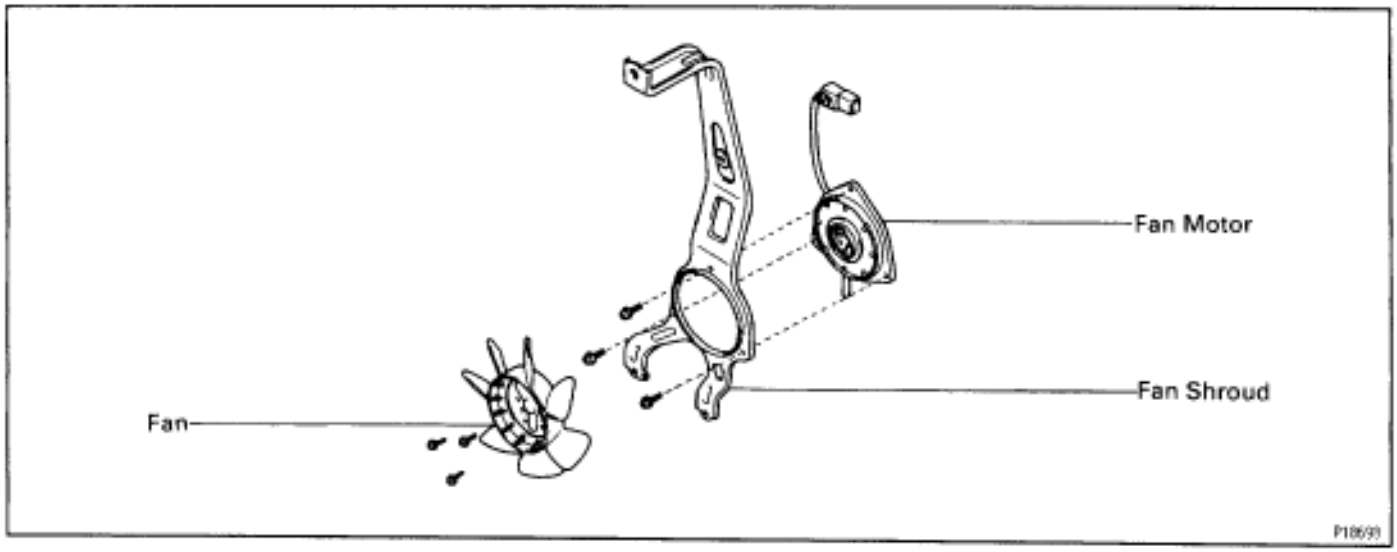

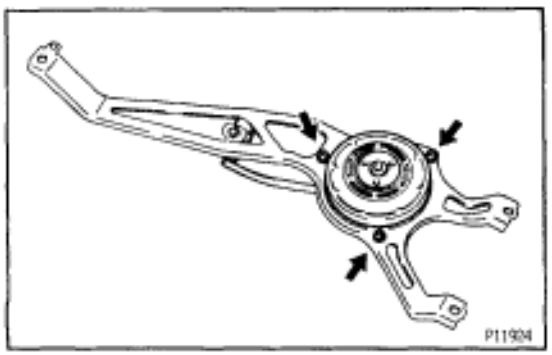

COOLING FAN DISASSEMBLY

Assembly is in the reverse order of disassembly.

1. REMOVE FAN

Remove the 3 screws and fan.

2. REMOVE FAN MOTOR

(a) Disconnect the connector from the fan shroud.

(b) Remove the 3 screws and fan motor.

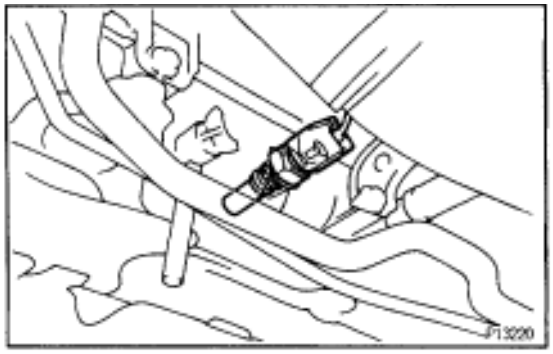

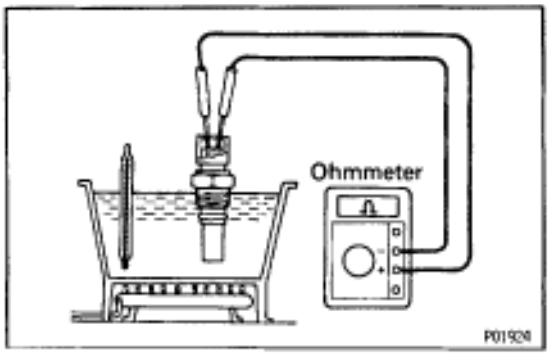

Engine Coolant Temperature (ECT) Switch

ECT SWITCH INSPECTION

1. REMOVE ENGINE UNDER COVER

2. DRAIN ENGINE COOLANT

3. REMOVE ECT SWITCH

(a) Disconnect the ECT switch connector.

(b) Remove the ECT switch.

(c) Remove the O–ring from the ECT switch.

4. INSPECT ECT SWITCH

(a) Using an ohmmeter, check that there is no continuity between the terminals when the coolant temperature is above 97˚C (207˚F).

(b) Using an ohmmeter, check that there is continuity between the terminals when the coolant temperature is below 88˚C (190˚F).

If continuity is not as specified, replace the switch.

5. REINSTALL ECT SWITCH

(a) Install a new O–ring to the ECT switch.

(b) Apply soapy water to the O–ring.

(c) Install the ECT switch.

Torque: 7.4 N·m (75 kgf·cm, 65 in.·lbf)

(d) Connect the ECT switch connector.

6. REFILL WITH ENGINE COOLANT

7. START ENGINE AND CHECK FOR LEAKS

8. REINSTALL ENGINE UNDER COVER

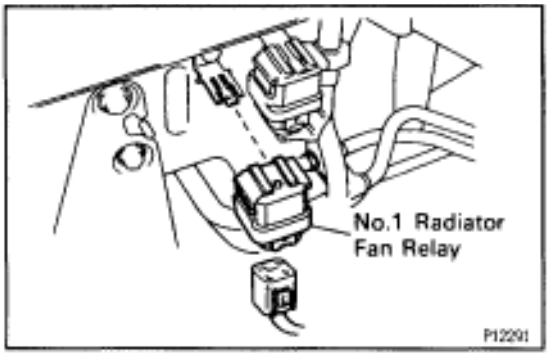

No.1 Radiator Fan Relay ("RADIATOR FAN RELAY")

RADIATOR FAN RELAY INSPECTION

1. w/ Auto Spoiler:
REMOVE LH HEADLIGHT

2. w/o Auto Spoiler:
REMOVE ENGINE UNDER COVER

3. REMOVE RADIATOR FAN RELAY

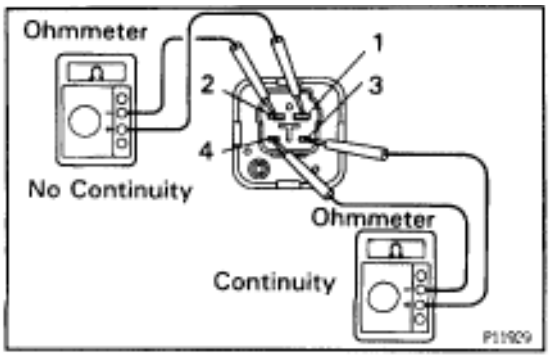

4. INSPECT RADIATOR FAN RELAY

A. Inspect relay continuity

(a) Using an ohmmeter, check that there is continuity between terminals 3 and 4.

(b) Check that there is no continuity between terminals 1 and 2.
If continuity is as specified, replace the relay.

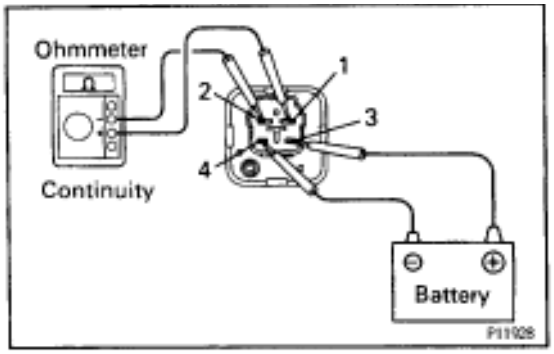

B. Inspect relay operation

(a) Apply battery voltage across terminals 3 and 4.

(b) Using an ohmmeter, check that there is continuity between terminals 1 and 2.

If operation is not as specified, replace the relay.

5. REINSTALL RADIATOR FAN RELAY

6. w/ Auto Spoiler:
REINSTALL LH HEADLIGHT

7. w/o Auto Spoiler:
REINSTALL ENGINE UNDER COVER

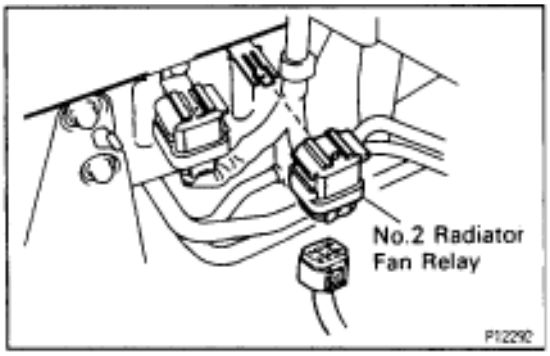

No.2 Radiator Fan Relay ("A.B.S. (TRAC) RELAY")

RADIATOR FAN RELAY INSPECTION

1. w/ Auto Spoiler:
REMOVE LH HEADLIGHT

2. w/o Auto Spoiler:
REMOVE ENGINE UNDER COVER

3. REMOVE RADIATOR FAN RELAY

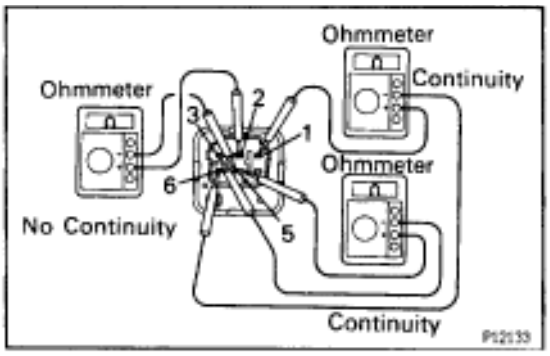

4. INSPECT RADIATOR FAN RELAY

A. Inspect relay continuity

(a) Using an ohmmeter, check that there is continuity between terminals 1 and 6.

(b) Check that there is continuity between terminals 3 and 5.

(c) Check that there is no continuity between terminals 2 and 5.

If continuity is not as specified, replace the relay.

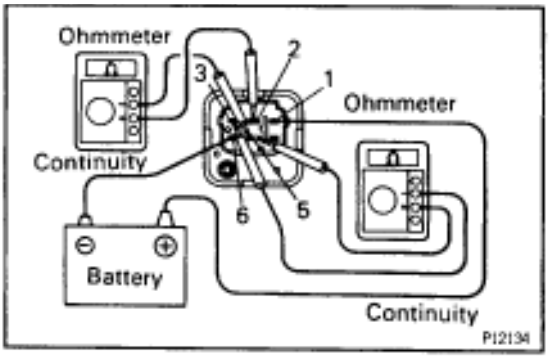

B. Inspect relay operation

(a) Apply battery voltage across terminals 1 and 6.

(b) Using an ohmmeter, check that there is no continuity between terminals 3 and 5.

(c) Check that there is continuity between terminals 2 and 5.

If operation is not as specified, replace the relay.

5. REINSTALL RADIATOR FAN RELAY

6. w/ Auto Spoiler:
REINSTALL LH HEADLIGHT

7. w/o Auto Spoiler:
REINSTALL ENGINE UNDER COVER

SERVICE SPECIFICATIONS
SERVICE DATA

Thermostat	Valve opening temperature Valve lift at 95°C (203°F)	80–84°C (176–183°F) 8.5 mm (0.335 in.) or more
Radiator cap	Relief valve opening pressure STD Minimum	93–123 kPa (0.95–1.25 kgf/cm^2, 13.5–17.8 psi) 78 kPa (0.8 kgf/cm^2, 11.4 psi)
Electric cooling fan	Rotating amperage	2.5–4.5 A

TORQUE SPECIFICATIONS

Part tightened	N·m	kgf·cm	ft·lbf
Engine drain plug x Cylinder block	29	300	22
Fan x Fluid coupling	7.4	75	65 in.·lbf
Water pump x Cylinder block	21	210	15
Water pump x No.2 water bypass pipe	21	210	15
Generator x Water pump	37	380	27
Generator x Cylinder block	37	380	27
Water bypass outlet x Cylinder head (2JZ–GE)	8.8	90	78 in.·lbf
Water outlet x Cylinder head (2JZ–GTE)	21	210	15
Water inlet x Water pump (2JZ–GE)	8.8	90	78 in.·lbf
Water inlet x Water pump (2JZ–GTE)	21	210	15
Upper radiator support x Body	15	155	11
ECT switch x Radiator (2JZ–GTE)	7.4	75	65 in.·lbf
Fluid coupling x Water pump	16	165	12
Oil cooler x Radiator lower tank (A/T)	8.3	85	74 in.·lbf
Oil cooler x Oil cooler pipe (A/T)	15	150	11

EMISSION CONTROL SYSTEMS (2JZ–GE)

SYSTEM PURPOSE

The emission control systems are installed to reduce the amount of CO, HC and NOx exhausted from the engine ((3), (4) and (5)), to prevent the atmospheric release of blow–by gas–containing HC (1) and evaporated fuel containing HC being released from the fuel tank (2).
The function of each system is shown in the following table.

System	Abbreviation	Function
(1) Positive Crankcase Ventilation	PCV	Reduces HC
(2) Evaporative Emission Control	EVAP	Reduces evaporated HC
(3) Exhaust Gas Recirculation	EGR	Reduces NOx
(4) Three–Way Catalytic Converter	TWC	Reduces CO, HC and NOx
(5) Sequential Multiport Fuel Injection*	SFI	Injects a precisely timed, optimum amount of fuel for reduced exhaust emissions

Remark: * For inspection and repair of the SFI system, refer to the SFI section this manual.

PREPARATION
RECOMMENDED TOOLS

	09082–00050 TOYOTA Electrical Tester Set •	

EQUIPMENT

Tachometer	
Torque wrench	
Vacuum gauge	

EMISSION CONTROL SYSTEMS (2JZ–GE)

SYSTEM PURPOSE

The emission control systems are installed to reduce the amount of CO, HC and NOx exhausted from the engine ((3), (4) and (5)), to prevent the atmospheric release of blow–by gas–containing HC (1) and evaporated fuel containing HC being released from the fuel tank (2).
The function of each system is shown in the following table.

System	Abbreviation	Function
(1) Positive Crankcase Ventilation	PCV	Reduces HC
(2) Evaporative Emission Control	EVAP	Reduces evaporated HC
(3) Exhaust Gas Recirculation	EGR	Reduces NOx
(4) Three–Way Catalytic Converter	TWC	Reduces CO, HC and NOx
(5) Sequential Multiport Fuel Injection*	SFI	Injects a precisely timed, optimum amount of fuel for reduced exhaust emissions

Remark: * For inspection and repair of the SFI system, refer to the SFI section this manual.

PREPARATION
RECOMMENDED TOOLS

	09082–00050 TOYOTA Electrical Tester Set ◆	

EQUIPMENT

Tachometer	
Torque wrench	
Vacuum gauge	

LAYOUT AND SCHEMATIC DRAWING

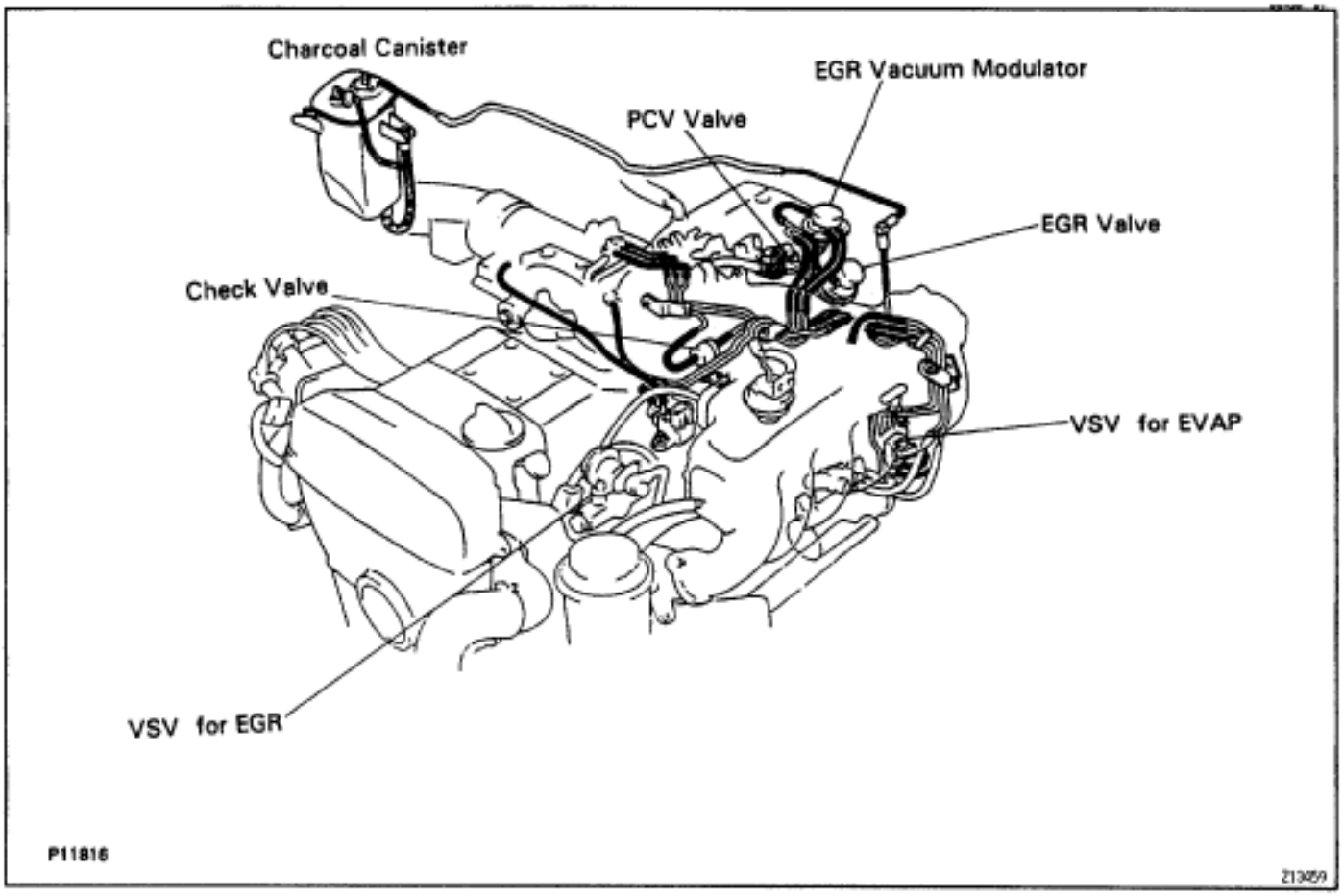

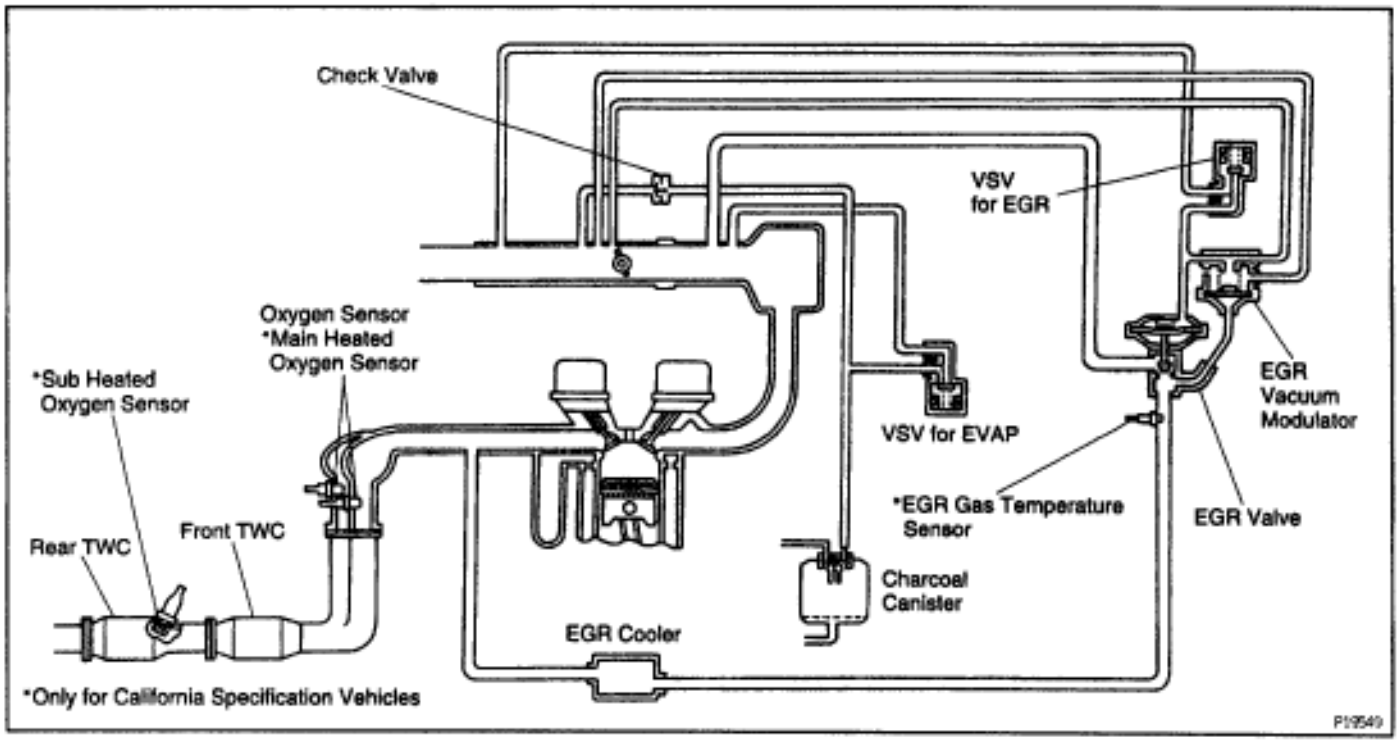

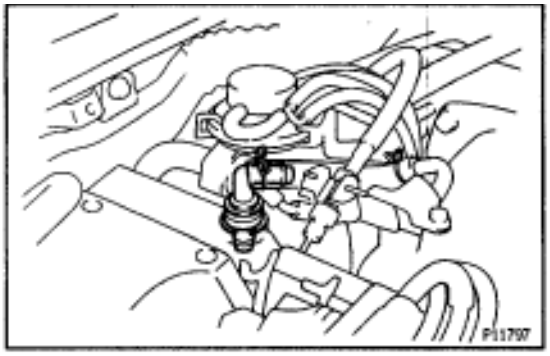

POSITIVE CRANKCASE VENTILATION (PCV) SYSTEM
PCV VALVE INSPECTION

1. REMOVE PCV VALVE

(a) Disconnect the PCV hose from the PCV valve.

(b) Remove the PCV valve.

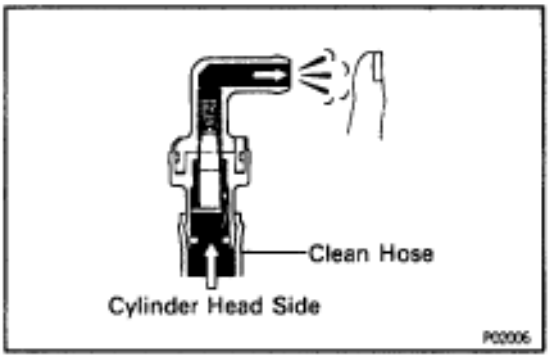

2. INSTALL CLEAN HOSE TO PCV VALVE

3. INSPECT PCV VALVE OPERATION

(a) Blow air into the cylinder head side, and check that air passes through easily.

CAUTION: Do not suck air through the valve. Petroleum substances inside the valve are harmful.

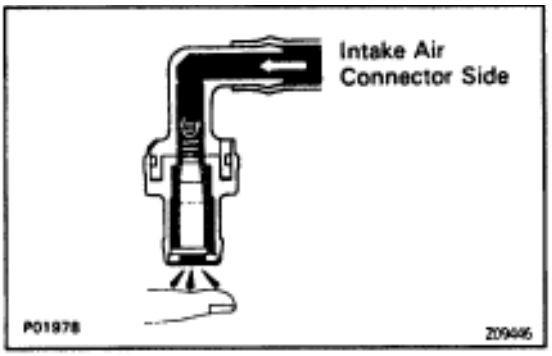

(b) Blow air into the intake air connecter side, and check that air passes through with difficulty.

If operation is not as specified, replace the PCV valve.

4. REMOVE CLEAN HOSE FROM PCV VALVE

5. REINSTALL PCV VALVE

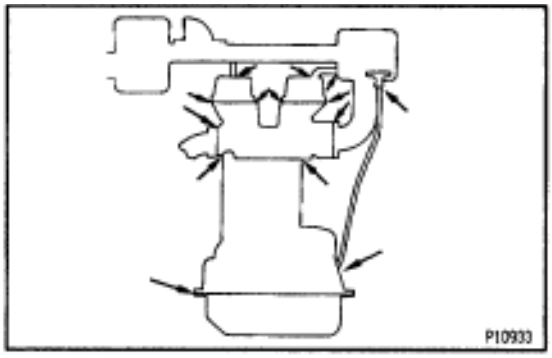

PCV HOSES AND CONNECTORS INSPECTION

VISUALLY INSPECT HOSES, CONNECTIONS AND GASKETS

Check for cracks, leaks or damage.

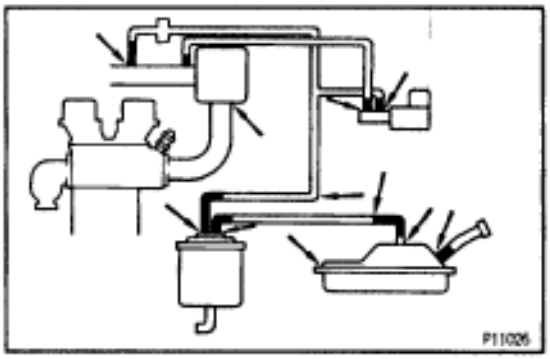

EVAPORATIVE EMISSION (EVAP) CONTROL SYSTEM
FUEL VAPOR LINES, FUEL TANK AND TANK CAP INSPECTION

1. VISUALLY INSPECT LINES AND CONNECTIONS
Look for loose connections, sharp bends or damage.

2. VISUALLY INSPECT FUEL TANK
Look for deformation, cracks or fuel leakage.

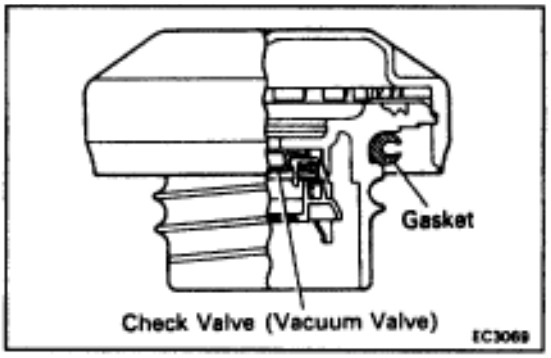

3. VISUALLY INSPECT FUEL TANK CAP
Check if the cap and/or gasket are deformed or damaged. If necessary, repair or replace the cap.

CHARCOAL CANISTER INSPECTION

1. REMOVE CHARCOAL CANISTER

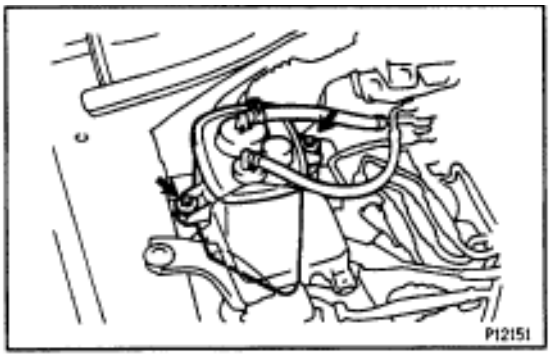

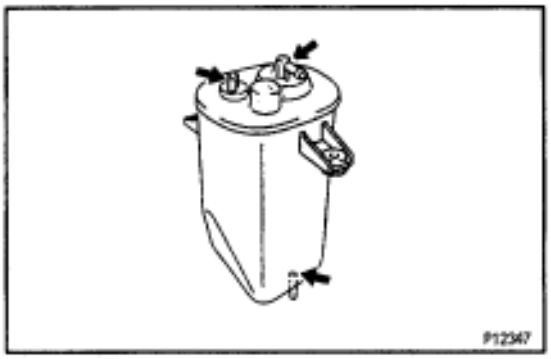

2. VISUALLY INSPECT CHARCOAL CANISTER
Look for cracks or damage.

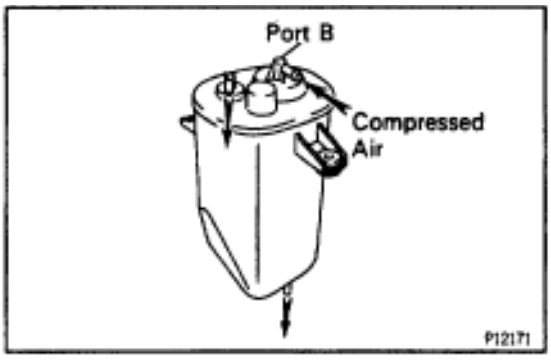

3. CHECK FOR CLOGGED FILTER AND STUCK CHECK VALVE

(a) Using low pressure compressed air (4.71 kPa (0.048 kgf/cm^2, 0.68 psi)), blow into port B and check that air flows without resistance from the other ports.

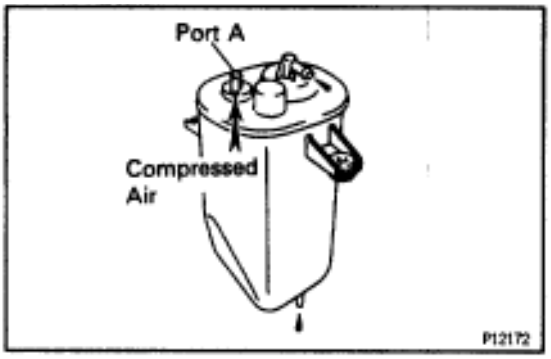

(b) Blow air (4.71 kPa (0.048 kgf/cm^2, 0.68 psi)) into port A, and check that air does not flow from the other ports.
If operation is not as specified, replace the charcoal canister.

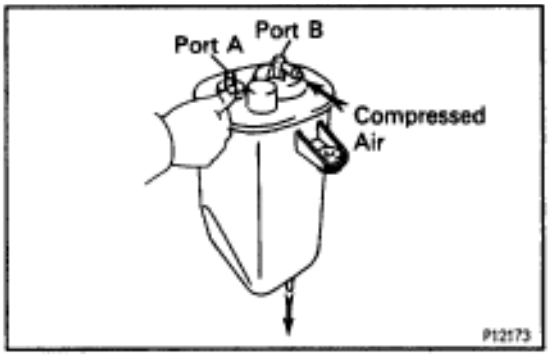

4. CLEAN FILTER IN CANISTER
Clean the filter by blowing 294 kPa (3 kgf/cm^2, 43 psi) of compressed air into port B while holding port A closed.
NOTICE:
- **Do not attempt to wash the canister.**
- **No activated carbon should come out.**

5. REINSTALL CHARCOAL CANISTER

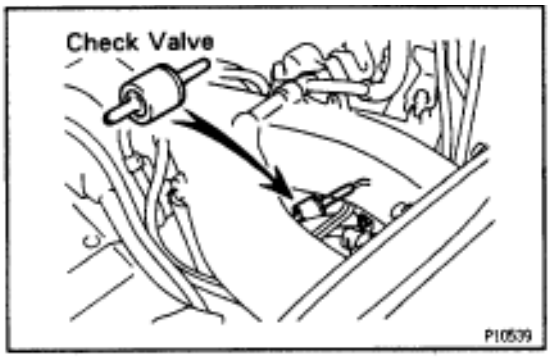

VSV INSPECTION

(See VSV for EVAP in SFI System)

CHECK VALVE INSPECTION

1. REMOVE CHECK VALVE

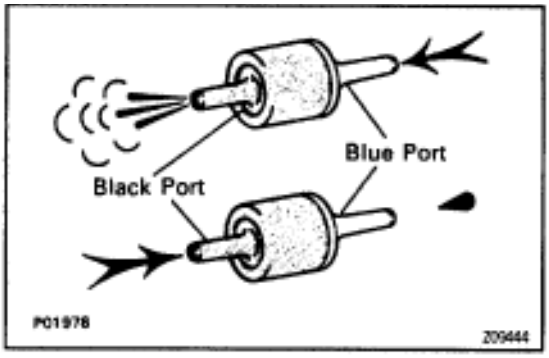

2. INSPECT CHECK VALVE
(a) Check that air flows from the blue port to the black port.
(b) Check that air does not flow from the black port to the blue port.
If operation is not as specified, replace the check valve.

3. REINSTALL CHECK VALVE
HINT: Install the check valve with the black port facing the port P side of the throttle body.

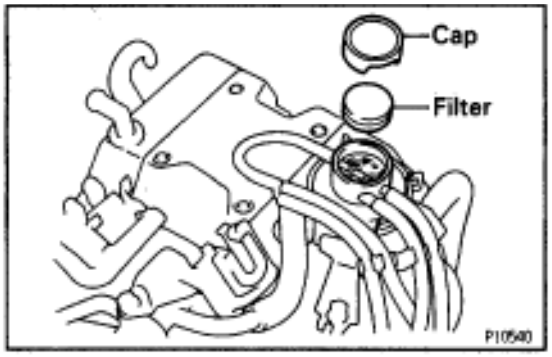

EXHAUST GAS RECIRCULATION (EGR) SYSTEM

EGR SYSTEM INSPECTION

1. CHECK AND CLEAN FILTER IN EGR VACUUM MODULATOR

(a) Remove the cap and filter.
(b) Check the filter for contamination or damage.
(c) Using compressed air, clean the filter.
(d) Reinstall the filter and cap.

HINT: Install the filter with the coarser surface facing the atmospheric side outward.

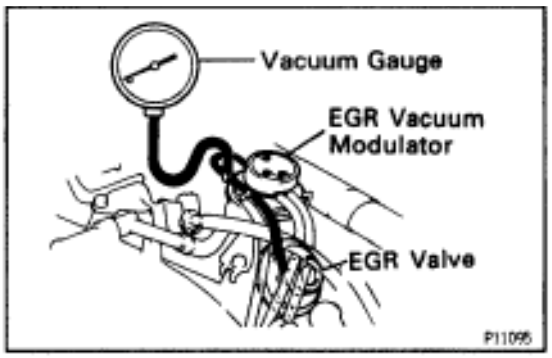

2. INSTALL VACUUM GAUGE

Using a 3–way connector, connect a vacuum gauge to the hose between the EGR valve and EGR vacuum modulator.

3. INSPECT SEATING OF EGR VALVE

Check that the engine starts and runs at idle.

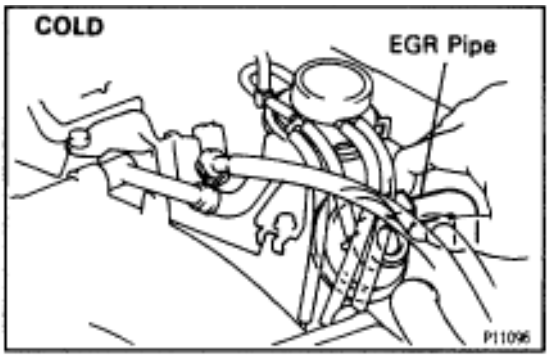

4. INSPECT VSV OPERATION WITH COLD ENGINE

(a) The engine coolant temperature should be below 45°C (113°F).
(b) Check that the vacuum gauge indicates zero at 2,500 rpm.
(c) Check that the EGR pipe is not hot.

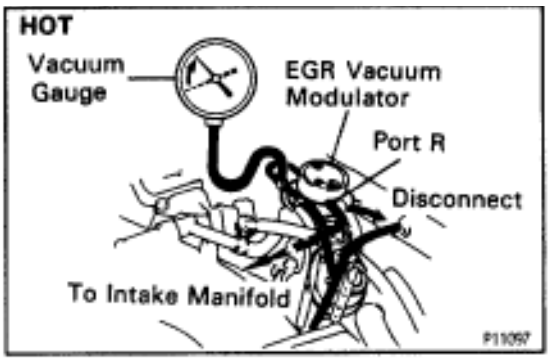

5. INSPECT OPERATION OF VSV AND EGR VACUUM MODULATOR WITH HOT ENGINE

(a) Warm up the engine to above 50°C (122°F).
(b) Check that the vacuum gauge indicates low vacuum at 3,500 rpm.
(c) Disconnect the vacuum hose from port R of the EGR vacuum modulator and connect port R directly to the air intake chamber with another hose.
(d) Check that the vacuum gauge indicates high vacuum at 3,500 rpm.

HINT: As exhaust gas is increasingly recirculated, the engine will start to misfire.

6. REMOVE VACUUM GAUGE

Remove the vacuum gauge, and reconnect the vacuum hoses to their proper locations.

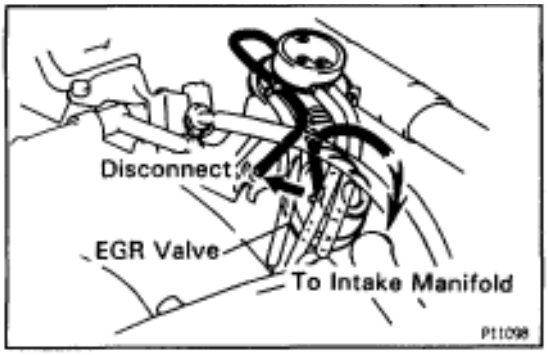

7. INSPECT EGR VALVE

(a) Apply vacuum directly to the EGR valve with the engine idling.

(b) Check that the engine runs rough or dies.

(c) Reconnect the vacuum hoses to their proper locations.

IF NO PROBLEM IS FOUND DURING THIS INSPECTION, SYSTEM IS NORMAL; OTHERWISE INSPECT EACH PART

VSV INSPECTION

(See VSV for EGR in SFI System)

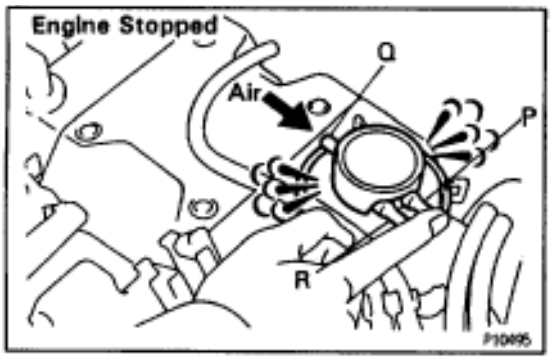

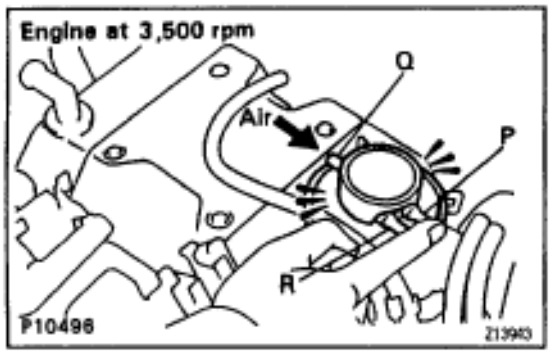

EGR VACUUM MODULATOR INSPECTION

1. DISCONNECT VACUUM HOSES FROM EGR VACUUM MODULATOR

Disconnect the 3 vacuum hoses from ports P, Q and R of the EGR vacuum modulator.

2. INSPECT EGR VACUUM MODULATOR OPERATION

(a) Block ports P and R with your finger.

(b) Blow air into port Q, and check that air passes through to the air filter side freely.

(c) Start the engine, and maintain speed at 3,500 rpm.

(d) Repeat the above test. Check that there is a strong resistance to air flow.

3. RECONNECT VACUUM HOSES TO EGR VACUUM MODULATOR

Connect the 3 vacuum hoses to the proper locations.

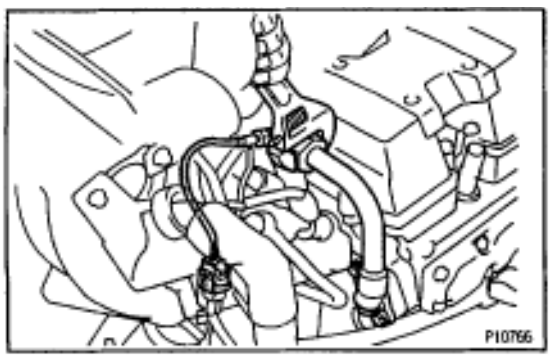

EGR VALVE INSPECTION

1. REMOVE EGR PIPE

(a) Loosen the union nut of the EGR pipe.

(b) Remove the 2 bolts, EGR pipe and gasket.

2. REMOVE EGR GAS TEMPERATURE SENSOR

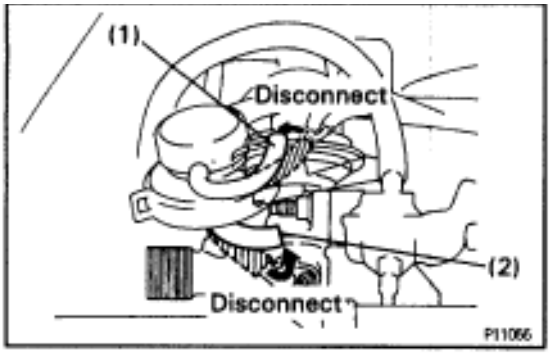

3. REMOVE EGR VALVE

(a) Disconnect these hoses from the EGR valve:
  (1) Vacuum hose
  (2) Pressure hose

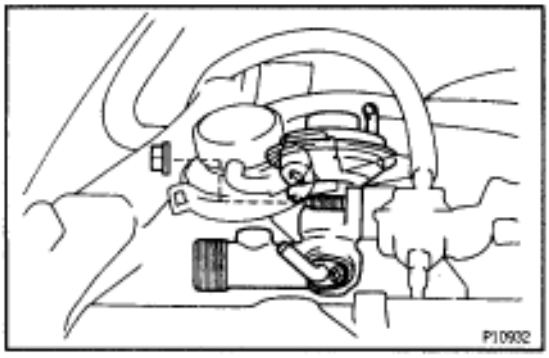

(b) Remove the 2 nuts, EGR valve and gasket.

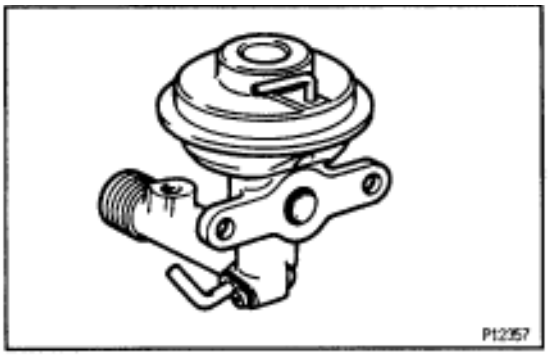

4. INSPECT EGR VALVE

Check for sticking and heavy carbon deposits.
If a problem is found, replace the EGR valve.

5. REINSTALL EGR VALVE

(a) Place a new gasket on the intake air connector.
(b) Install the EGR valve with the 2 nuts.
Torque: 27 N·m (280 kgf·cm, 20 ft·lbf)
(c) Reconnect the following hoses to the EGR valve:
- Vacuum hose
- Pressure hose

6. REINSTALL EGR GAS TEMPERATURE SENSOR

Torque: 20 N·m (200 kgf·cm, 14 ft·lbf)

7. REINSTALL EGR PIPE

(a) Temporarily install the union nut of the EGR pipe.
(b) Install a new gasket and the EGR pipe with the 2 bolts.
Torque: 21 N·m (210 kgf·cm, 15 ft·lbf)
(c) Tighten the union nut of the EGR pipe.
Torque: 64 N·m (650 kgf·cm, 47 ft·lbf)

THREE–WAY CATALYTIC CONVERTER (TWC) SYSTEM

EXHAUST PIPE ASSEMBLY INSPECTION

1. **CHECK CONNECTIONS FOR LOOSENSESS OR DAMAGE**
2. **CHECK CLAMPS FOR WEAKNESS, CRACKS OR DAMAGE**

TWC INSPECTION

CHECK FOR DENTS OR DAMAGE

If any part of the protector is damaged or dented to the extent that it contacts the TWC, repair or replace it.

HEAT INSULATOR INSPECTION

1. **CHECK HEAT INSULATOR FOR DAMAGE**
2. **CHECK FOR ADEQUATE CLEARANCE BETWEEN CATALYTIC CONVERTER AND HEAT INSULATOR**

COMPONENTS FOR FRONT TWC REMOVAL AND INSTALLATION

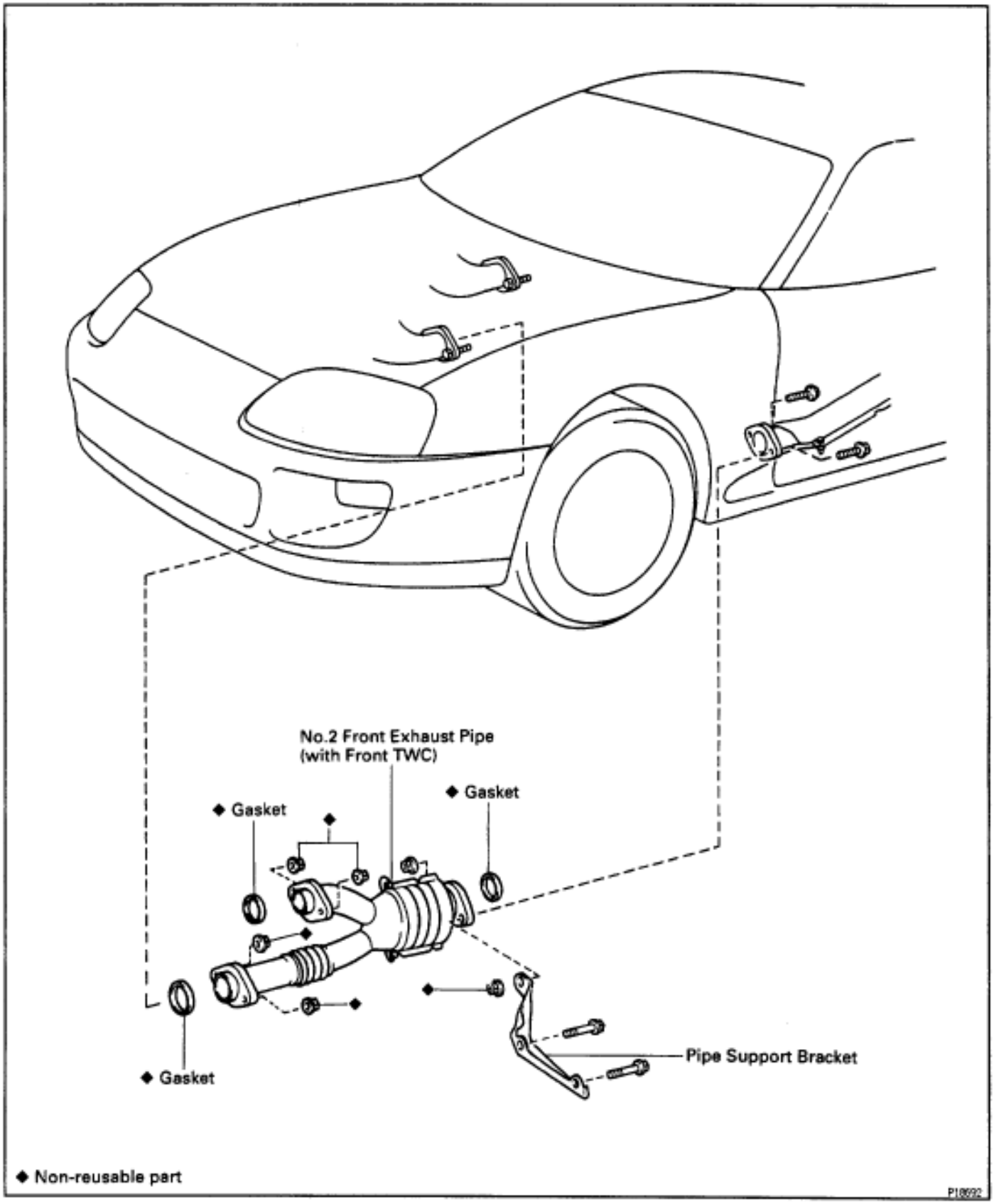

COMPONENTS FOR REAR TWC REMOVAL AND INSTALLATION

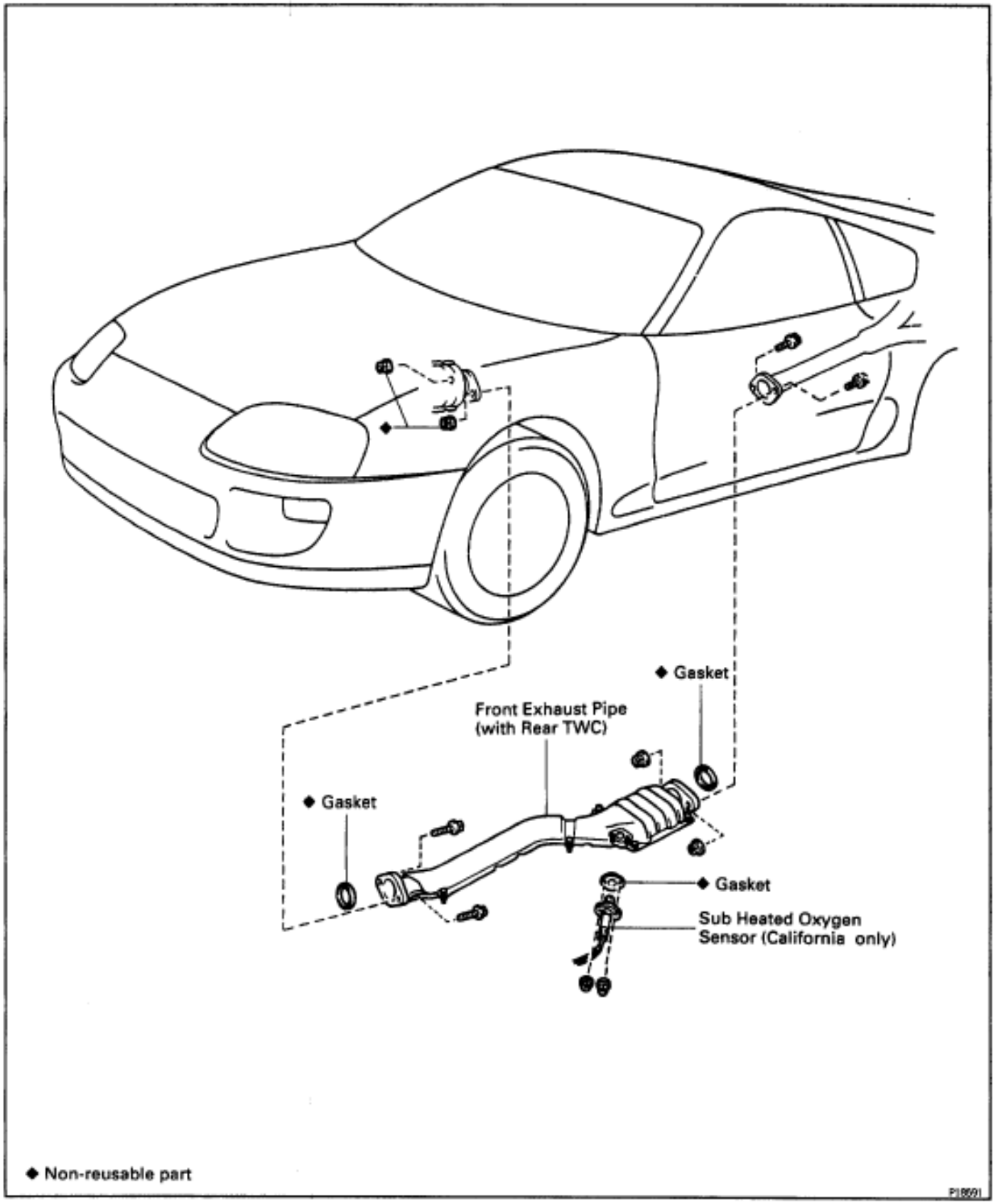

SERVICE SPECIFICATIONS
TORQUE SPECIFICATIONS

Part tightened	N·m	kgf·cm	ft·lbf
EGR valve x Intake air connector	21	210	15
EGR gas temperature sensor x EGR valve	20	200	14
EGR pipe x Cylinder head	27	280	20
EGR valve x EGR pipe	64	650	47
No.2 front exhaust pipe (Front TWC) x Exhaust manifold	62	630	46
Pipe support bracket x Transmission	43	440	32
No.2 front exhaust pipe (Front TWC) x Front exhaust pipe (Rear TWC)	43	440	32
Front exhaust pipe (Rear TWC) x Center exhaust pipe	43	440	32
Sub heated oxygen sensor (California only) x Front exhaust pipe	20	200	14

EMISSION CONTROL SYSTEMS (2JZ–GTE)

SYSTEM PURPOSE

The emission control systems are installed to reduce the amount of CO, HC and NOx exhausted from the engine ((3), (4) and (5)), to prevent the atmospheric release of blow–by gas–containing HC (1) and evaporated fuel containing HC being released from the fuel tank (2).

The function of each system is shown in the following table.

System	Abbreviation	Function
(1) Positive Crankcase Ventilation	PCV	Reduces HC
(2) Evaporative Emission Control	EVAP	Reduces evaporated HC
(3) Exhaust Gas Recirculation	EGR	Reduces NOx
(4) Three–way Catalytic Converter	TWC	Reduces CO, HC and NOx
(5) Sequential Multiport Fuel Injection*	SFI	Injects a precisely timed, optimum amount of fuel for reduced exhaust emissions

Remark: * For inspection and repair of the SFI system, refer to the SFI section this manual.

PREPARATION

RECOMMENDED TOOLS

	09082–00050 TOYOTA Electrical Tester Set •	

EQUIPMENT

Tachometer	
Torque wrench	
Vacuum gauge	

EMISSION CONTROL SYSTEMS (2JZ–GTE)

SYSTEM PURPOSE

The emission control systems are installed to reduce the amount of CO, HC and NOx exhausted from the engine ((3), (4) and (5)), to prevent the atmospheric release of blow–by gas–containing HC (1) and evaporated fuel containing HC being released from the fuel tank (2).

The function of each system is shown in the following table.

System	Abbreviation	Function
(1) Positive Crankcase Ventilation	PCV	Reduces HC
(2) Evaporative Emission Control	EVAP	Reduces evaporated HC
(3) Exhaust Gas Recirculation	EGR	Reduces NOx
(4) Three–way Catalytic Converter	TWC	Reduces CO, HC and NOx
(5) Sequential Multiport Fuel Injection*	SFI	Injects a precisely timed, optimum amount of fuel for reduced exhaust emissions

Remark: * For inspection and repair of the SFI system, refer to the SFI section this manual.

PREPARATION

RECOMMENDED TOOLS

	09082–00050 TOYOTA Electrical Tester Set ◆	

EQUIPMENT

Tachometer	
Torque wrench	
Vacuum gauge	

LAYOUT AND SCHEMATIC DRAWING

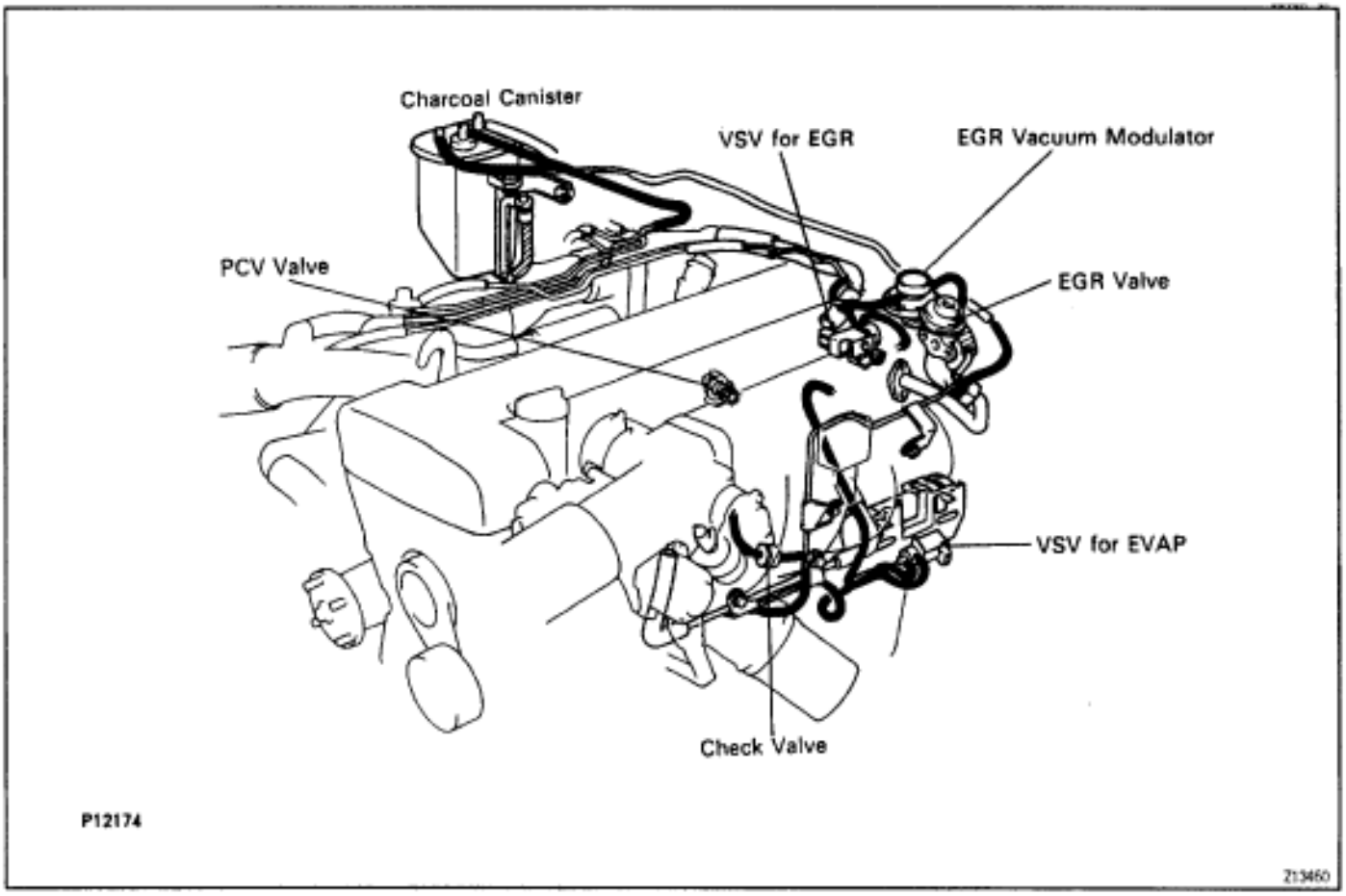

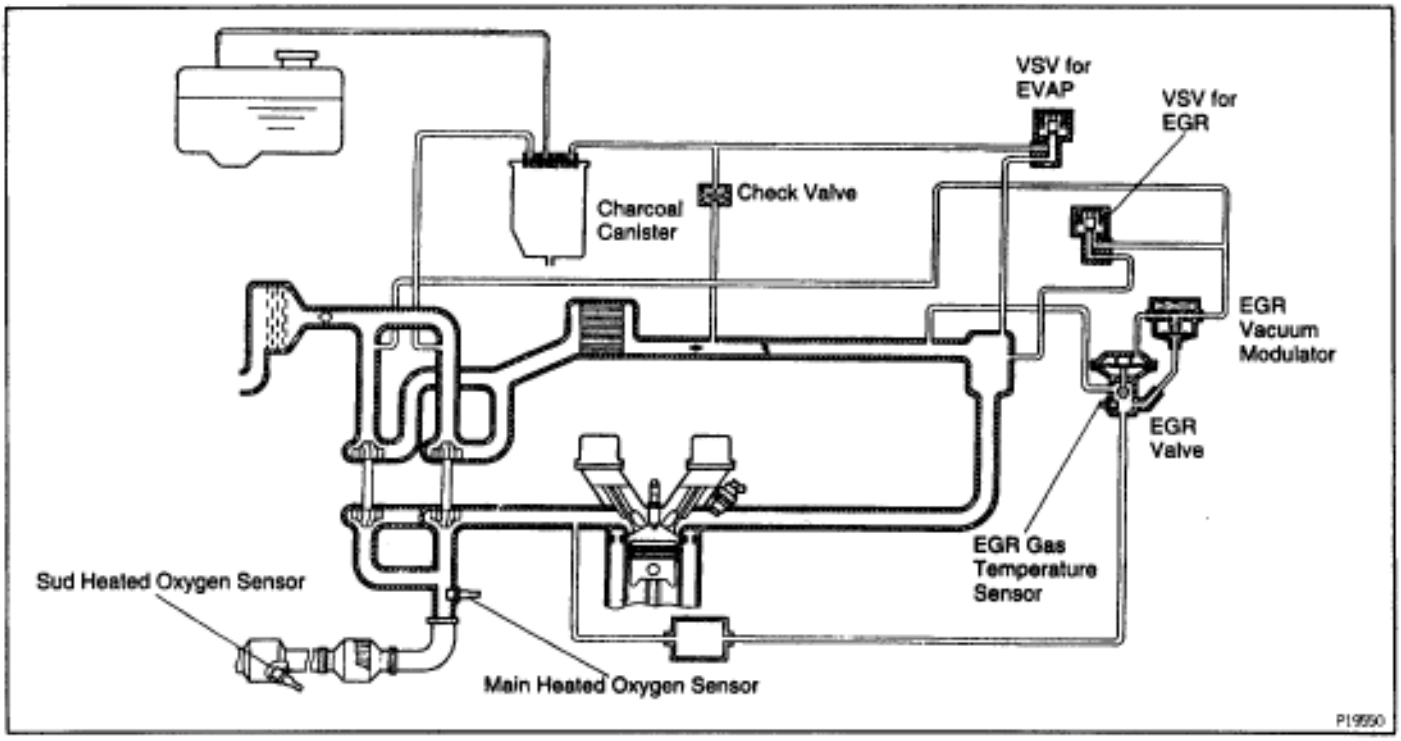

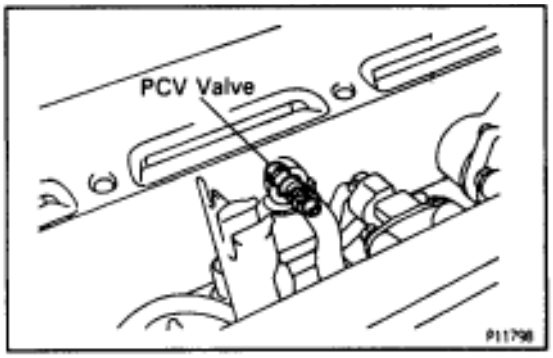

POSITIVE CRANKCASE VENTILATION (PCV) SYSTEM
PCV VALVE INSPECTION

1. REMOVE PCV VALVE

(a) Disconnect the PCV hose from the PCV valve.

(b) Remove the PCV valve.

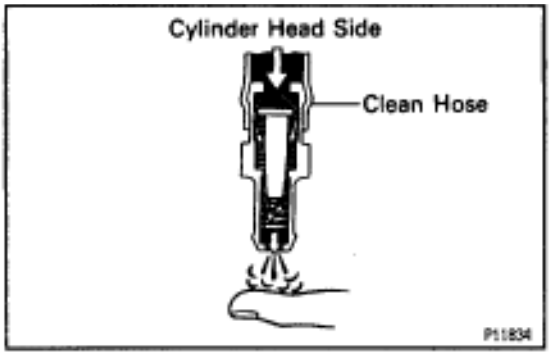

2. INSTALL CLEAN HOSE TO PCV VALVE

3. INSPECT PCV VALVE OPERATION

(a) Blow air into the cylinder head side, and check that air passes through easily.

CAUTION: Do not suck air through the valve. Petroleum substances inside the valve are harmful.

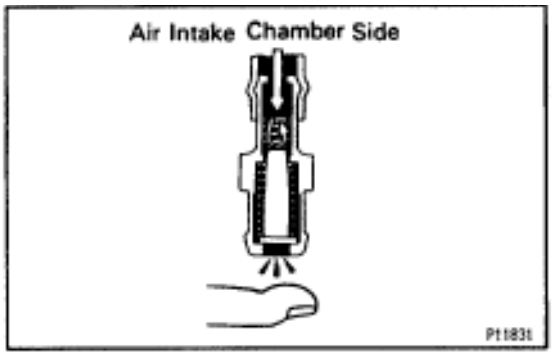

(b) Blow air into the air intake chamber side, and check that air passes through with difficulty.

If operation is not as specified, replace the PCV valve.

4. REMOVE CLEAN HOSE FROM PCV VALVE

5. REINSTALL PCV VALVE

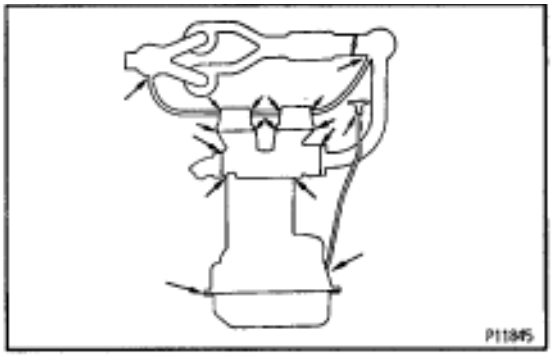

PCV HOSES AND CONNECTORS INSPECTION

VISUALLY INSPECT HOSES, CONNECTIONS AND GASKETS

Check for cracks, leaks or damage.

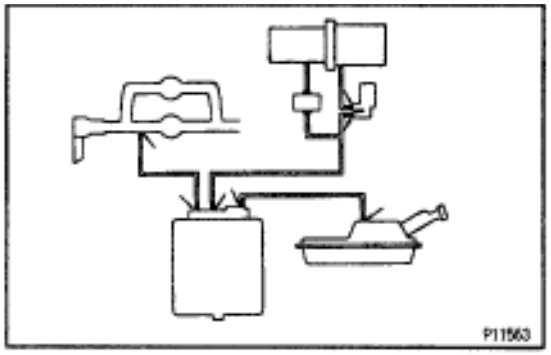

EVAPORATIVE EMISSION (EVAP) CONTROL SYSTEM
FUEL VAPOR LINES, FUEL TANK AND TANK CAP INSPECTION

1. VISUALLY INSPECT LINES AND CONNECTIONS
Look for loose connections, sharp bends or damage.

2. VISUALLY INSPECT FUEL TANK
Look for deformation, cracks or fuel leakage.

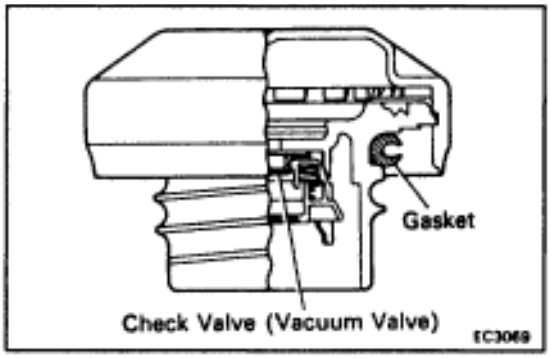

3. VISUALLY INSPECT FUEL TANK CAP
Check if the cap and/or gasket are deformed or damaged. If necessary, repair or replace the cap.

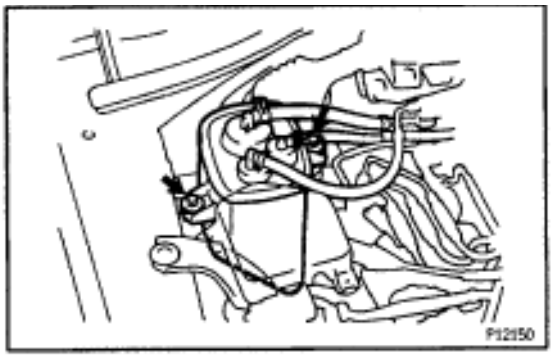

CHARCOAL CANISTER INSPECTION

1. REMOVE CHARCOAL CANISTER

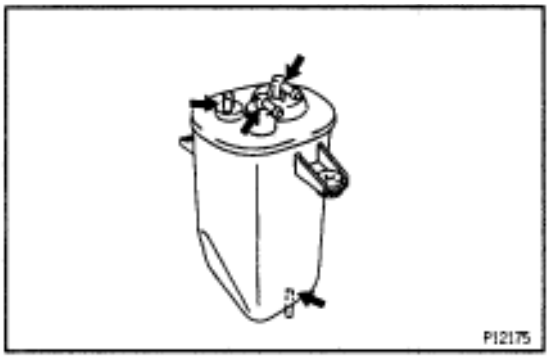

2. VISUALLY INSPECT CHARCOAL CANISTER
Look for cracks or damage.

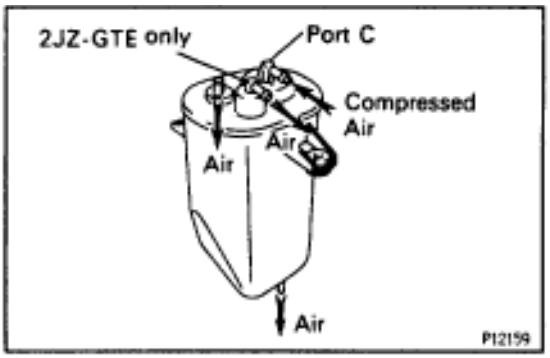

3. CHECK FOR CLOGGED FILTER AND STUCK CHECK VALVE

(a) Using low pressure compressed air (4.71 kPa (0.048 kgf/cm^2, 0.68 psi)), blow into port C and check that air flows without resistance from the other ports.

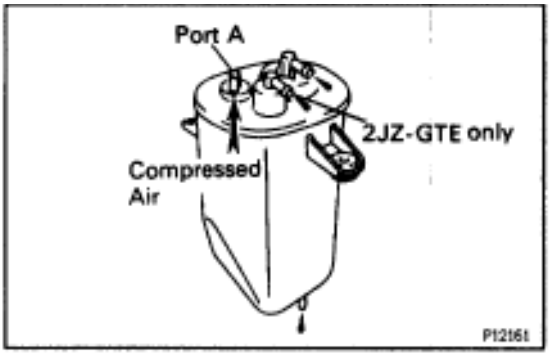

(b) Blow air (4.71 kPa (0.048 kgf/cm^2, 0.68 psi)) into port A, and check that air does not flow from the other ports.

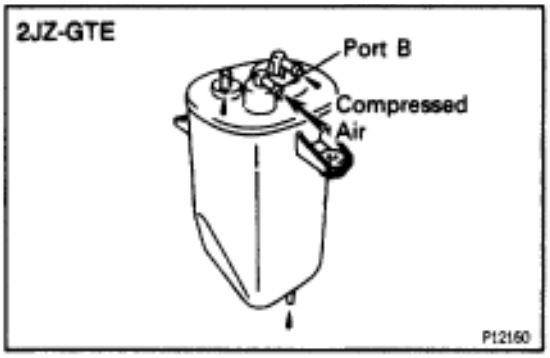

(c) Blow air (4.71 kPa (0.048 kgf/cm^2, 0.68 psi)) into port B, and check that air does not flow from the other ports.
If operation is not as specified, replace the charcoal canister.

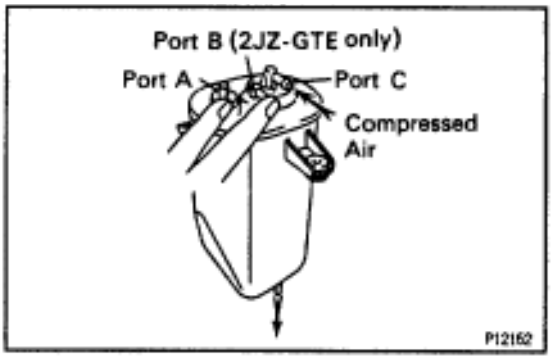

4. CLEAN FILTER IN CANISTER
Clean the filter by blowing 294 kPa (3 kgf/cm^2, 43 psi) of compressed air into port C while holding port A and B closed.
NOTICE:
- **Do not attempt to wash the canister.**
- **No activated carbon should come out.**

5. REINSTALL CHARCOAL CANISTER

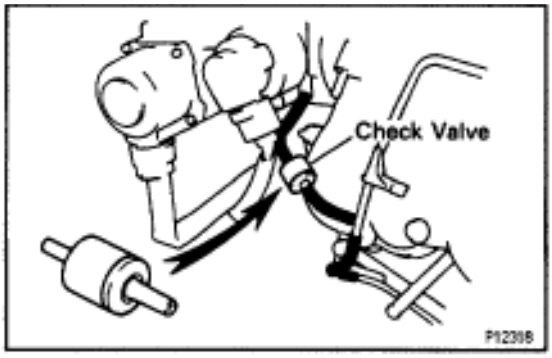

VSV INSPECTION

(See VSV for EVAP in SFI System)

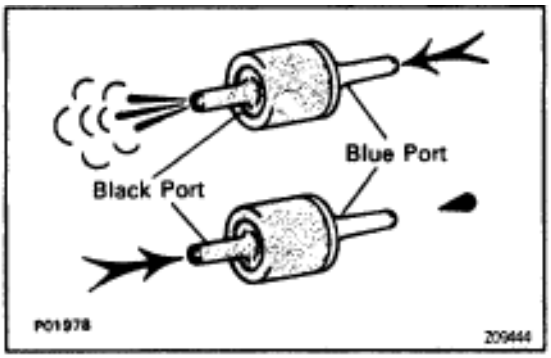

CHECK VALVE INSPECTION

1. REMOVE CHECK VALVE

2. INSPECT CHECK VALVE
(a) Check that air flows from the blue port to the black port.
(b) Check that air does not flow from the black port to the blue port.
If operation is not as specified, replace the check valve.

3. REINSTALL CHECK VALVE
HINT: Install the check valve with the black port facing the purge port side of the throttle body.

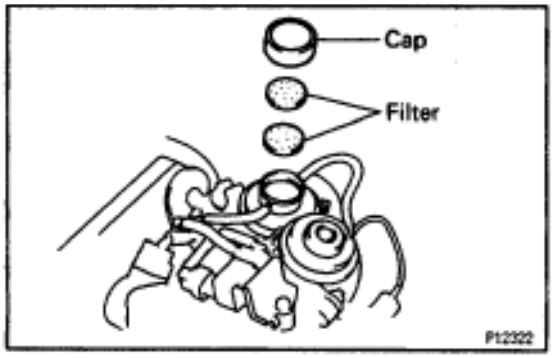

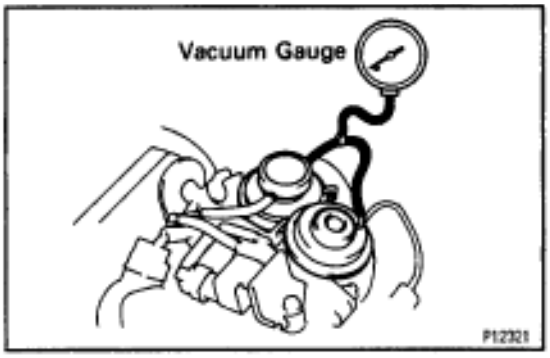

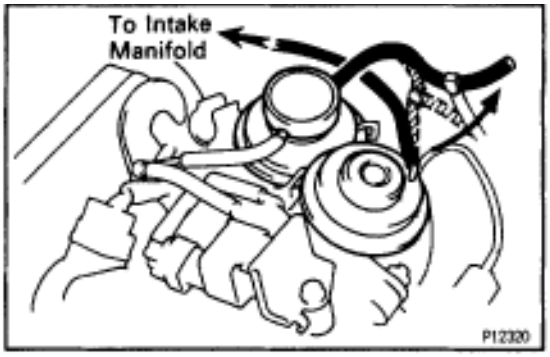

EXHAUST GAS RECIRCULATION (EGR) SYSTEM

EGR SYSTEM INSPECTION

1. INSPECT AND CLEAN FILTER IN EGR VACUUM MODULATOR

(a) Remove the cap and 2 filters.
(b) Check the filter for contamination or damage.
(c) Using compressed air, clean the filter.
(d) Reinstall the 2 filters and cap.

HINT: Install the filter with the coarser surface facing the atmospheric side (outward).

2. INSTALL VACUUM GAUGE

Using a 3–way connector, connect a vacuum gauge to the hose between the EGR valve and vacuum modulator.

3. INSPECT SEATING OF EGR VALVE

Start the engine and check that the engine starts and runs at at idle.

4. INSPECT VSV OPERATION WITH COLD ENGINE

(a) The coolant temperature should be below 50˚C (122˚ F).
(b) From idle, race the engine to 3,500–4,000 rpm (throttle valve opening angle to about 1/3 of maximum).
(c) Check that the EGR pipe is not hot.
(d) Check that the vacuum gauge indicates zero.

5. INSPECT VSV OPERATION WITH HOT ENGINE

(a) Warm up the engine to above 50˚C (122˚F)
(b) From idle, race the engine to 3,500–4,000 rpm (throttle valve opening angle to about 1/3 of maximum).
(c) Check that the vacuum gauge indicates low vacuum.

6. REMOVE VACUUM GAUGE

Remove the vacuum gauge, and reconnect the vacuum hoses to their proper locations.

7. INSPECT EGR VALVE

(a) Apply vacuum directly to the EGR valve with the engine idling.
(b) Check that the engine runs rough or dies.
(c) Reconnect the vacuum hoses to the proper locations.

IF NO PROBLEM IS FOUND DURING THIS INSPECTION, SYSTEM IS NORMAL; OTHERWISE INSPECT EACH PART

VSV INSPECTION

(See VSV for EGR in SFI System)

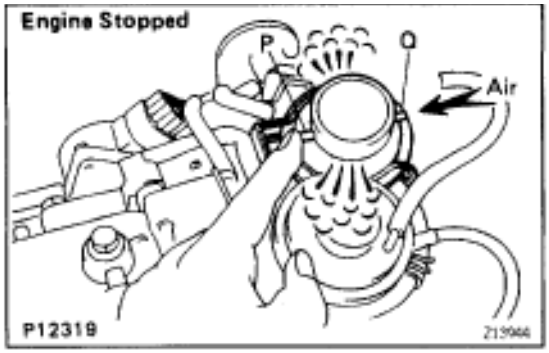

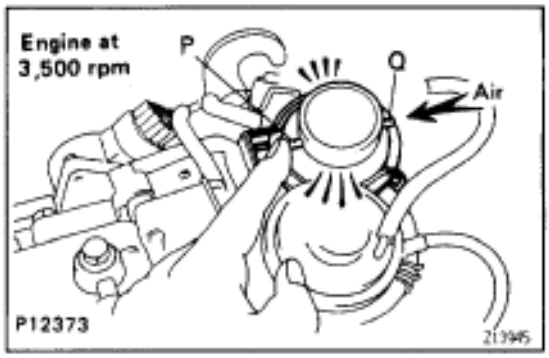

EGR VACUUM MODULATOR INSPECTION

1. DISCONNECT VACUUM HOSES FROM EGR VACUUM MODULATOR

Disconnect the 2 vacuum hoses from ports P and Q of the EGR vacuum modulator.

2. INSPECT EGR VACUUM MODULATOR OPERATION

(a) Block port P with your finger.

(b) Blow air into port Q, and check that the air passes through to the air filter side freely.

(c) Start the engine, and maintain speed at 3,500 rpm.

(d) Repeat the above test. Check that there is a strong resistance to air flow.

3. RECONNECT VACUUM HOSES TO EGR VACUUM MODULATOR

Reconnect the 2 vacuum hoses to the proper locations.

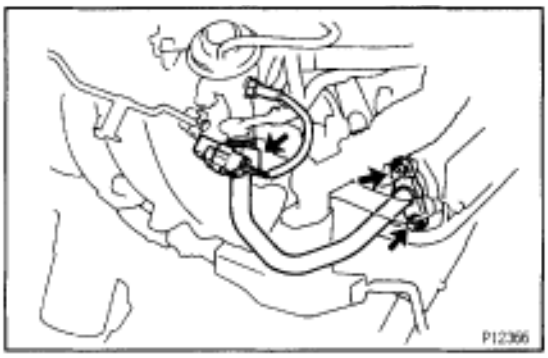

EGR VALVE INSPECTION

1. REMOVE EGR PIPE

(a) Loosen the union nut of the EGR pipe.

(b) Remove the 2 bolts, EGR pipe and gasket.

2. REMOVE EGR GAS TEMPERATURE SENSOR

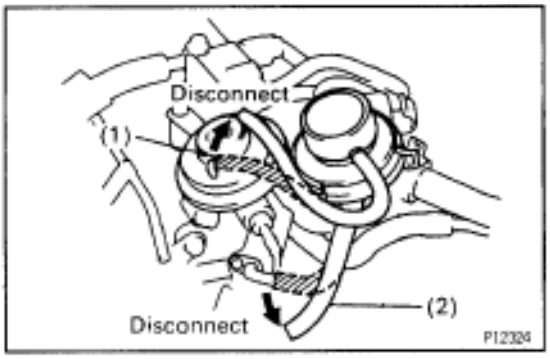

3. REMOVE EGR VALVE

(a) Disconnect these hoses from the EGR valve:

(1) Vacuum hose

(2) Pressure hose

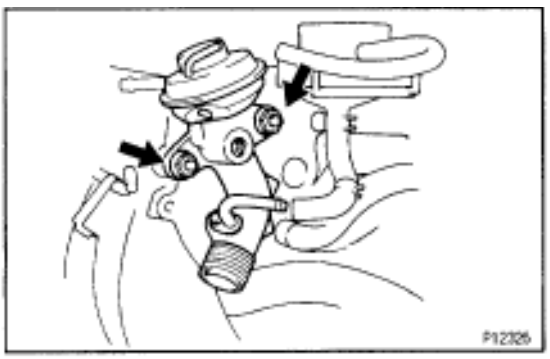

(b) Remove the 2 nuts, EGR valve and gasket.

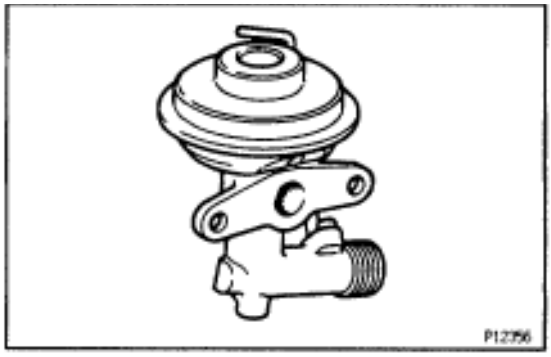

4. INSPECT EGR VALVE

Check for sticking and heavy carbon deposits.

If a problem is found, replace the EGR valve.

5. REINSTALL EGR VALVE

(a) Place a new gasket on the air intake chamber.

(b) Install the EGR valve with the 2 nuts.

Torque: 21 N·m (210 kgf·cm, 15 ft·lbf)

(c) Reconnect the following hoses to the EGR valve:

- Vacuum hose
- Pressure hose

6. REINSTALL EGR GAS TEMPERATURE SENSOR

Torque: 20 N·m (200 kgf·cm, 14 ft·lbf)

7. REINSTALL EGR PIPE

(a) Temporarily install the union nut of the EGR pipe.

(b) Install a new gasket and the EGR pipe with the 2 bolts.

Torque: 27 N·m (280 kgf·cm, 20 ft·lbf)

(c) Tighten the union nut of the EGR pipe.

Torque: 64 N·m (650 kgf·cm, 47 ft·lbf)

THREE–WAY CATALYTIC CONVERTER (TWC) SYSTEM

EXHAUST PIPE ASSEMBLY INSPECTION

1. **CHECK CONNECTIONS FOR LOOSENSESS OR DAMAGE**
2. **CHECK CLAMPS FOR WEAKNESS, CRACKS OR DAMAGE**

TWC INSPECTION

CHECK FOR DENTS OR DAMAGE

If any part of the protector is damaged or dented to the extent that it contacts the TWC, repair or replace it.

HEAT INSULATOR INSPECTION

1. **CHECK HEAT INSULATOR FOR DAMAGE**
2. **CHECK FOR ADEQUATE CLEARANCE BETWEEN CATALYTIC CONVERTER AND HEAT INSULATOR**

COMPONENTS FOR FRONT TWC REPLACEMENT

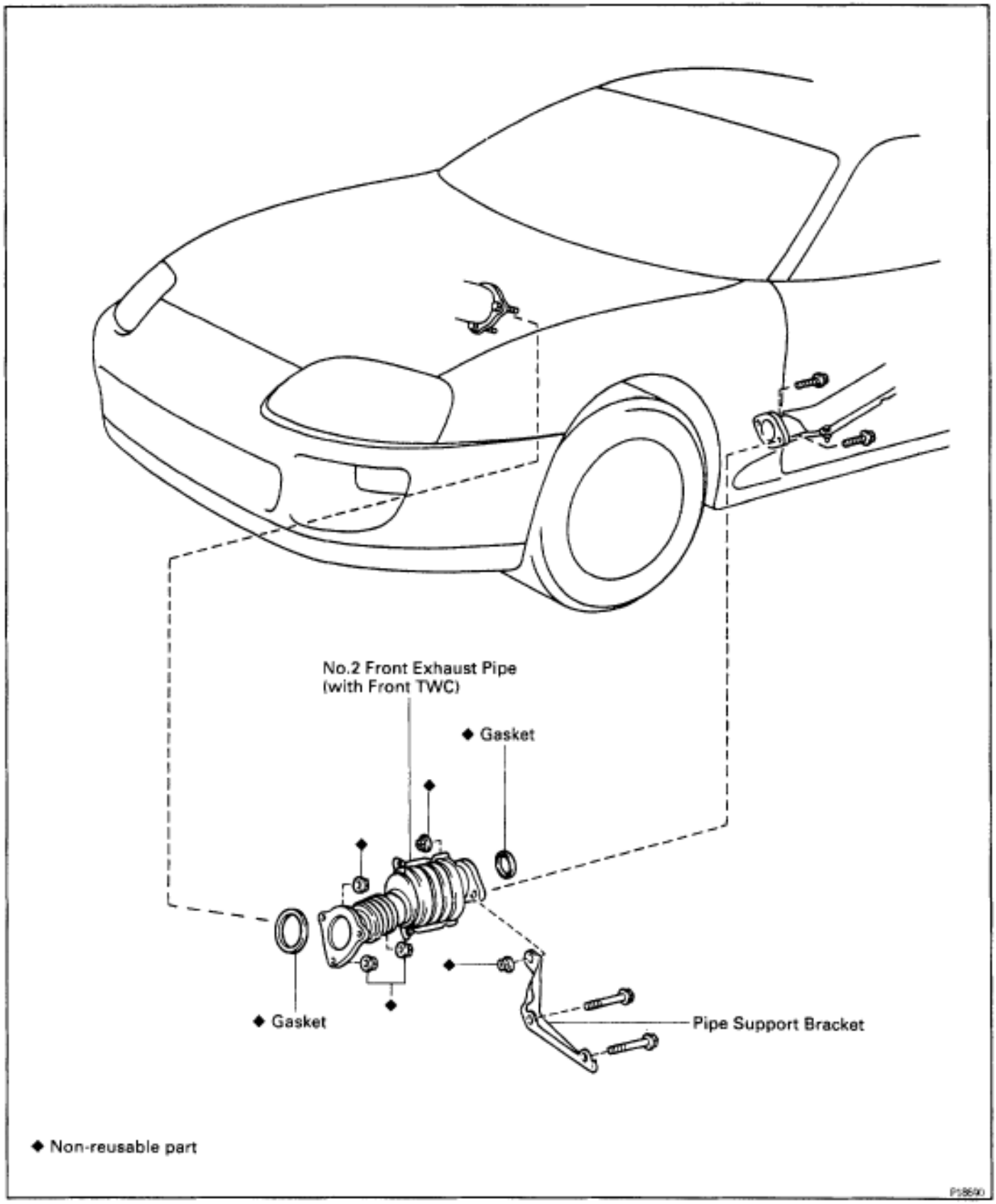

COMPONENTS FOR REAR TWC REPLACEMENT

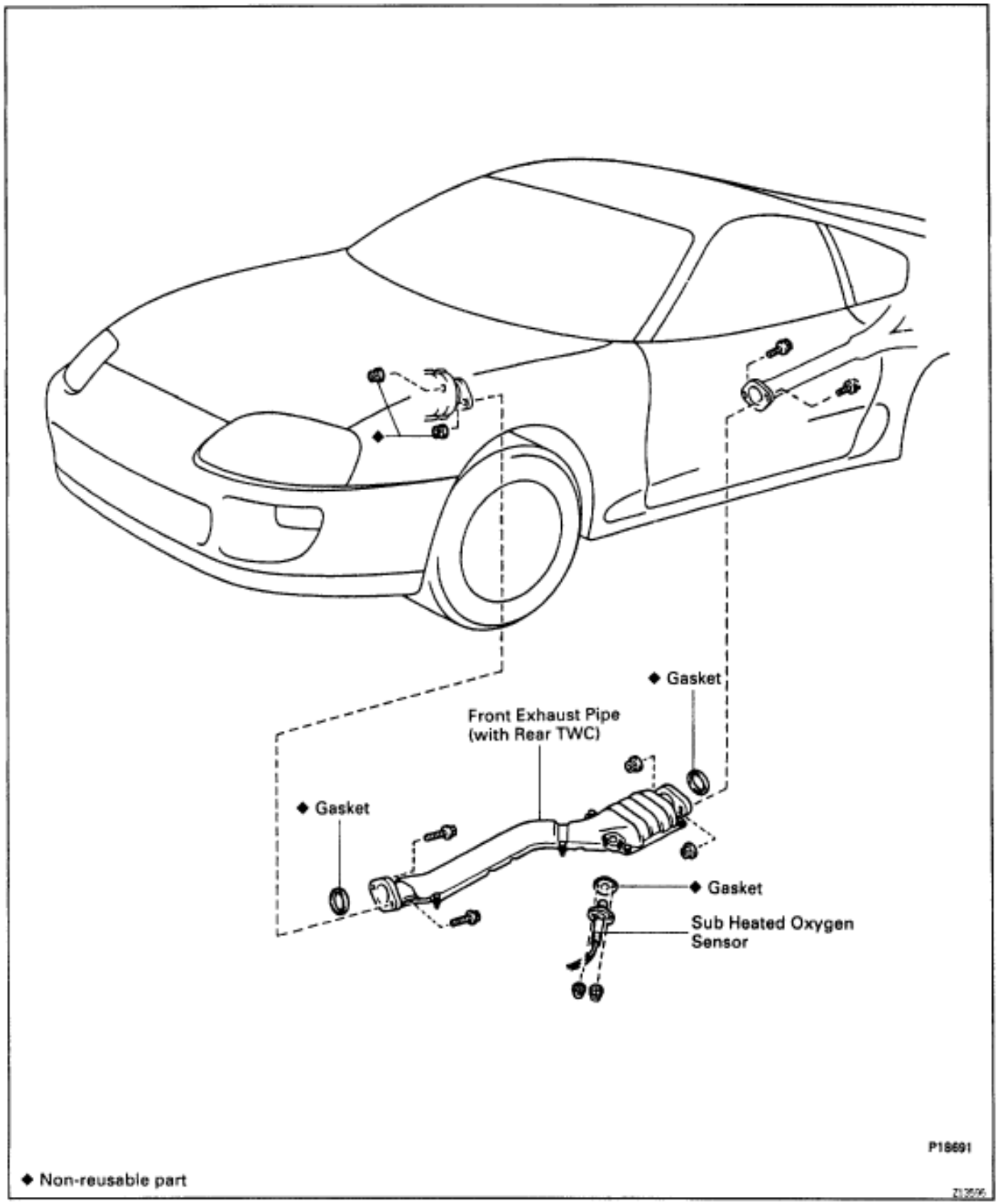

SERVICE SPECIFICATIONS

TORQUE SPECIFICATIONS

Part tightened	N·m	kgf·cm	ft·lbf
EGR valve x Air Intake chamber	21	210	15
EGR gas temperature sensor x EGR valve	20	200	14
EGR pipe x Cylinder head	27	280	20
EGR valve x EGR pipe	64	650	47
No.2 front exhaust pipe (Front TWC) x Exhaust manifold	62	630	46
Pipe support bracket x Transmission	43	440	32
No.2 front exhaust pipe (Front TWC) x Front exhaust pipe (Rear TWC)	43	440	32
Front exhaust pipe (Rear TWC) x Center exhaust pipe	43	440	32
Sub heated oxygen sensor x Front exhaust pipe	20	200	14

LUBRICATION SYSTEM

PREPARATION

SST (SPECIAL SERVICE TOOLS)

	09032–00100 Oil Pan Seal Cutter	No.2 oil pan
	09228–07500 Oil Filter Wrench	
	09316–60010 Transmission & Transfer Bearing Replacer	
	(09316–00010) Replacer Pipe	Crankshaft front oil seal
	09816–30010 Oil Pressure Switch Socket	

RECOMMENDED TOOLS

	09040–00010 Hexagon Wrench Set ◆	
	09040–00020 Torx Socket E10 ◆	A/C compressor stud bolt
	09200–00010 Engine Adjust Kit ◆	

EQUIPMENT

Oil pressure gauge	
Precision straight edge	Oil pump
Torque wrench	

LUBRICANT

Item	Capacity	Classification
Engine oil (2JZ–GE) Dry fill Drain and refill w/ Oil filter change w/o Oil filter change	 6.5 liters (6.9 US qts, 5.7 Imp. qts) 5.3 liters (5.6 US qts, 4.7 Imp. qts) 4.9 liters (5.2 US qts, 4.3 Imp. qts)	API grade SH, Energy–Conserving II mutigrade engine oil or ILSAC multigrade engine oil and recommended viscosity oil, with SAE 5W–30 being preferred engine oil
Engine oil (2JZ–GTE) Dry fill Drain and refill w/ Oil filter change w/o Oil filter change	 6.5 liters (6.9 US qts, 5.7 Imp. qts) 5.0 liters (5.3 US qts, 4.4 Imp. qts) 4.7 liters (5.0 US qts, 4.1 Imp. qts)	API grade SH, Energy–Conserving II mutigrade engine oil or ILSAC multigrade engine oil and recommended viscosity oil

SSM (SPECIAL SERVICE MATERIALS)

08826–00080	Seal Packing Black or equivalent (FIPG)	Oil pump No.1 oil pan No.2 oil pan
08833–00080	Adhesive 1344, THREE BOND 1344, LOCTITE 242 or equivalent	Oil pressure switch Idler pulley pivot bolt

OIL PRESSURE CHECK

1. CHECK OIL QUALITY

Check the oil for deterioration, entry of water, discoloring or thinning.

If oil quality is visibly poor, replace the oil.

2. CHECK ENGINE OIL LEVEL

The oil level should be between the ”L” and ”F” marks on the dipstick.

If low, check for the leakage and add oil up to ”F” mark.

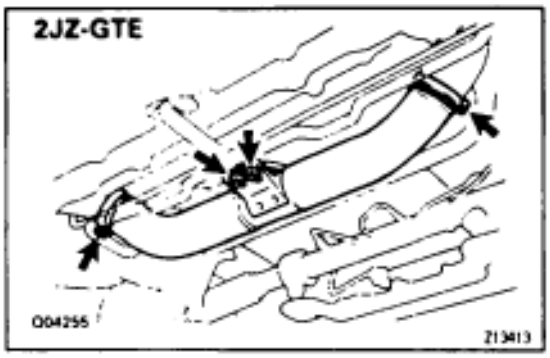

3. REMOVE ENGINE UNDER COVER

4. 2JZ–GTE:

REMOVE NO.2 AIR TUBE

Loosen the 2 hose clamps, and remove 2 bolts and air tube.

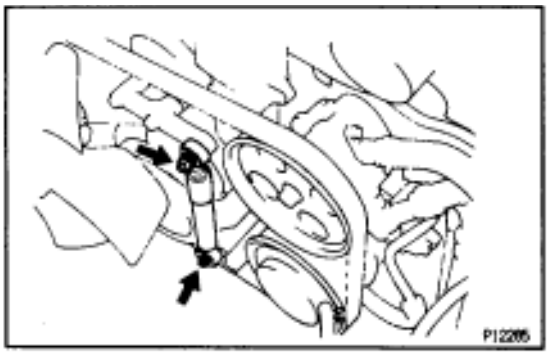

5. 2JZ–GTE M/T:

REMOVE DRIVE BELT TENSIONER DAMPER

Remove the 2 nuts and tensioner damper.

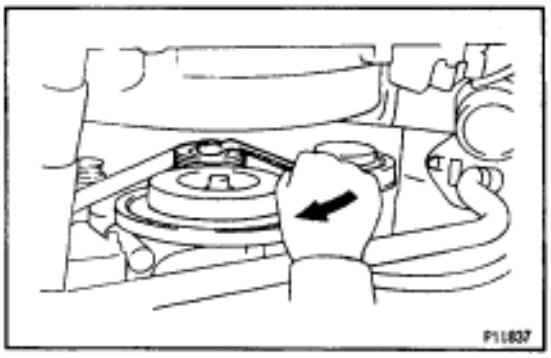

6. DISCONNECT A/C COMPRESSOR FROM ENGINE

(a) Loosen the drive belt tension by turning the drive belt tensioner clockwise, and remove the drive belt.

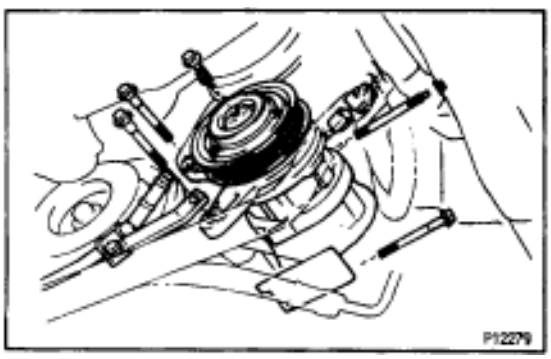

(b) Remove the 4 bolts and nut.
(c) Using a torx socket (E10), remove the stud bolt.
(d) Disconnect the compressor connector.
(e) Remove 4 bolts and pull the compressor downward.

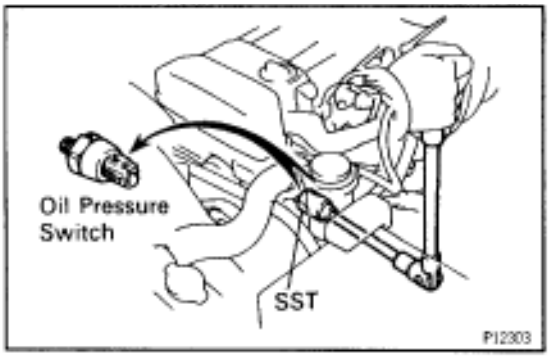

7. REMOVE OIL PRESSURE SWITCH, AND INSTALL OIL PRESSURE GAUGE

(a) Disconnect the oil pressure switch connector.

(b) Using SST, remove the oil pressure switch.
SST 09816–30010

(c) Install an oil pressure gauge.

8. REINSTALL A/C COMPRESSOR

(a) Temporarily install the A/C compressor with the 4 bolts.

(b) Connect the compressor connector.

(c) Install the compressor with the stud bolt, 4 bolts and nut.
Torque:
Stud bolt
26 N·m (265 kgf·cm, 19 ft·lbf)
Bolt and nut
52 N·m (530 kgf·cm, 38 ft·lbf)

(d) Install the drive belt.

9. WARM UP ENGINE

Allow the engine to warm up to normal operating temperature.

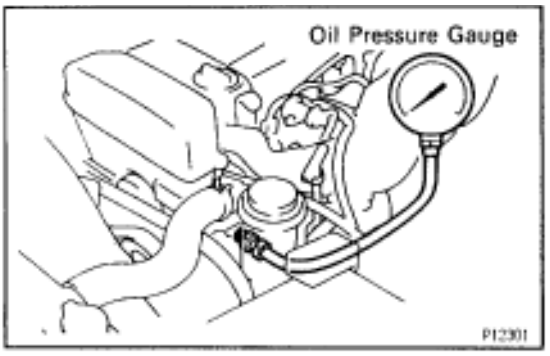

10. CHECK OIL PRESSURE
Oil pressure:
At idle
49 kPa (0.5 kgf/cm^2, 7.1 psi) or more
At 3,000 rpm (2JZ–GE) or 4,000 rpm (2JZ–GTE)
324–579 kPa
(3.3–5.9 kgf/cm^2, 47–84 psi)

11. DISCONNECT A/C COMPRESSOR FROM ENGINE

12. REMOVE OIL PRESSURE GAUGE, AND REINSTALL OIL PRESSURE SWITCH

(a) Remove the oil pressure gauge.

(b) Apply adhesive to 2 or 3 threads of the oil pressure switch.
Adhesive:
Part No. 08833–00080, THREE BOND 1344,
LOCTITE 242 or equivalent

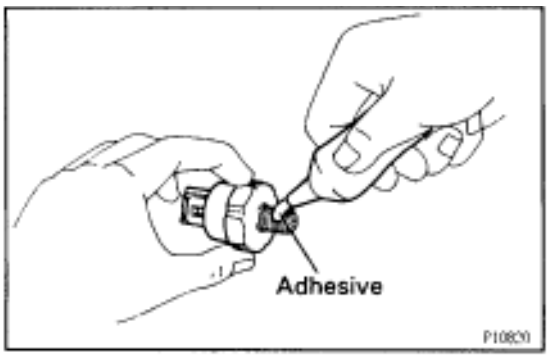

(c) Using SST, install the oil pressure switch.
SST 09816–30010
Torque: 14 N·m (150 kgf·cm, 11 ft·lbf)

(d) Connect the oil pressure switch connector.

13. REINSTALL A/C COMPRESSOR

14. START ENGINE AND CHECK FOR LEAKS

15. 2JZ–GTE M/T:
INSTALL DRIVE BELT TENSIONER DAMPER
Torque: 20 N·m (200 kgf·cm, 14 ft·lbf)

16. 2JZ–GTE:
REINSTALL NO.2 AIR TUBE

17. REINSTALL ENGINE UNDER COVER

OIL AND FILTER REPLACEMENT

CAUTION:

- **Prolonged and repeated contact with mineral oil will result in the removal of natural fats from the skin, leading to dryness, irritation and dermatitis. In addition, used engine oil contains potentially harmful contaminants which may cause skin cancer.**
- **Exercise caution in order to minimize the length and frequency of contact of your skin to used oil. Wear protective clothing and gloves. Wash your skin thoroughly with soap and water, or use waterless hand cleaner, to remove any used engine oil. Do not use gasoline, thinners, or solvents.**
- **In order to preserve the environment, used oil and used oil filters must be disposed of only at designated disposal sites.**

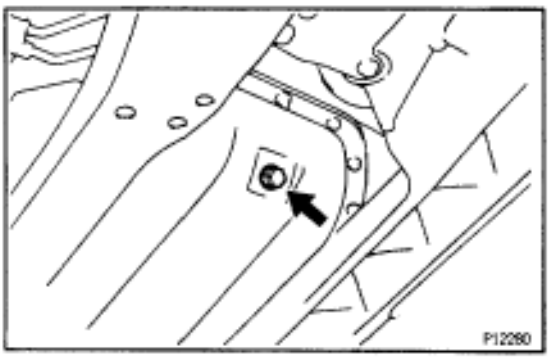

1. DRAIN ENGINE OIL

(a) Remove the oil filler cap

(b) Remove the oil drain plug, and drain the oil into a container.



2. REPLACE OIL FILTER

(a) Using SST, remove the oil filter.
SST 09228–07500

(b) Check and clean the oil filter installation surface.

(c) Apply clean engine oil to the gasket of a new oil filter.



(d) Lightly screw the oil filter into place, and tighten it until the gasket contacts the seat.

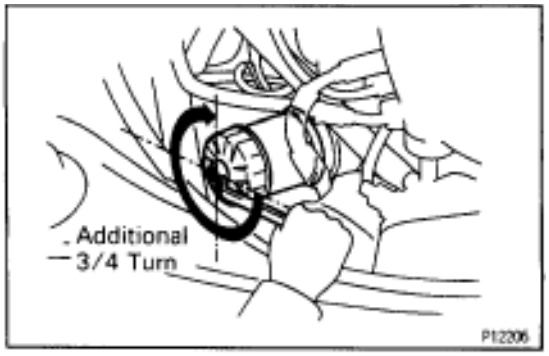

(e) Using SST, tighten it an additional 3/4 turn.
SST 09228–07500

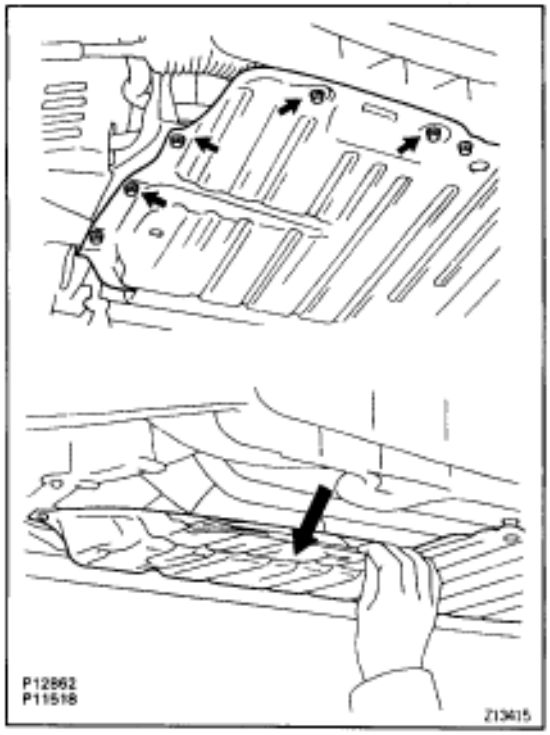

3. REFILL WITH ENGINE OIL

(a) To wipe off oil that has dripped onto the engine under cover, remove the 4 screws and bend the under cover downward.
NOTICE:
- **To avoid damaging the silencer, do not bend the engine under cover more than 150 mm.**
- **If oil gets on the silencer, wipe it off with a dry rag.**

(b) Clean and install the oil drain plug with a new gasket.
Torque: 38 N·m (375 kgf·cm, 27 ft·lbf)

(c) Fill with fresh engine oil.
Capacity:

2JZ–GE

Drain and refill

w/ Oil filter change

5.3 liters (5.6 US qts, 4.7 Imp. qts)

w/o Oil filter change

4.9 liters (5.2 US qts, 4.3 Imp. qts)

Dry fill

6.5 liters (6.9 US qts, 5.7 Imp. qts)

2JZ–GTE

Drain and refill

w/ Oil filter change

5.0 liters (5.3 US qts, 4.4 Imp. qts)

w/o Oil filter change

4.7 liters (5.0 US qts, 4.1 Imp. qts)

Dry fill

6.5 liters (6.9 US qts, 5.7 Imp. qts)

(d) Reinstall the oil filler cap.

4. START ENGINE AND CHECK FOR OIL LEAKS

5. RECHECK ENGINE OIL LEVEL

OIL PUMP
COMPONENTS FOR REMOVAL AND INSTALLATION

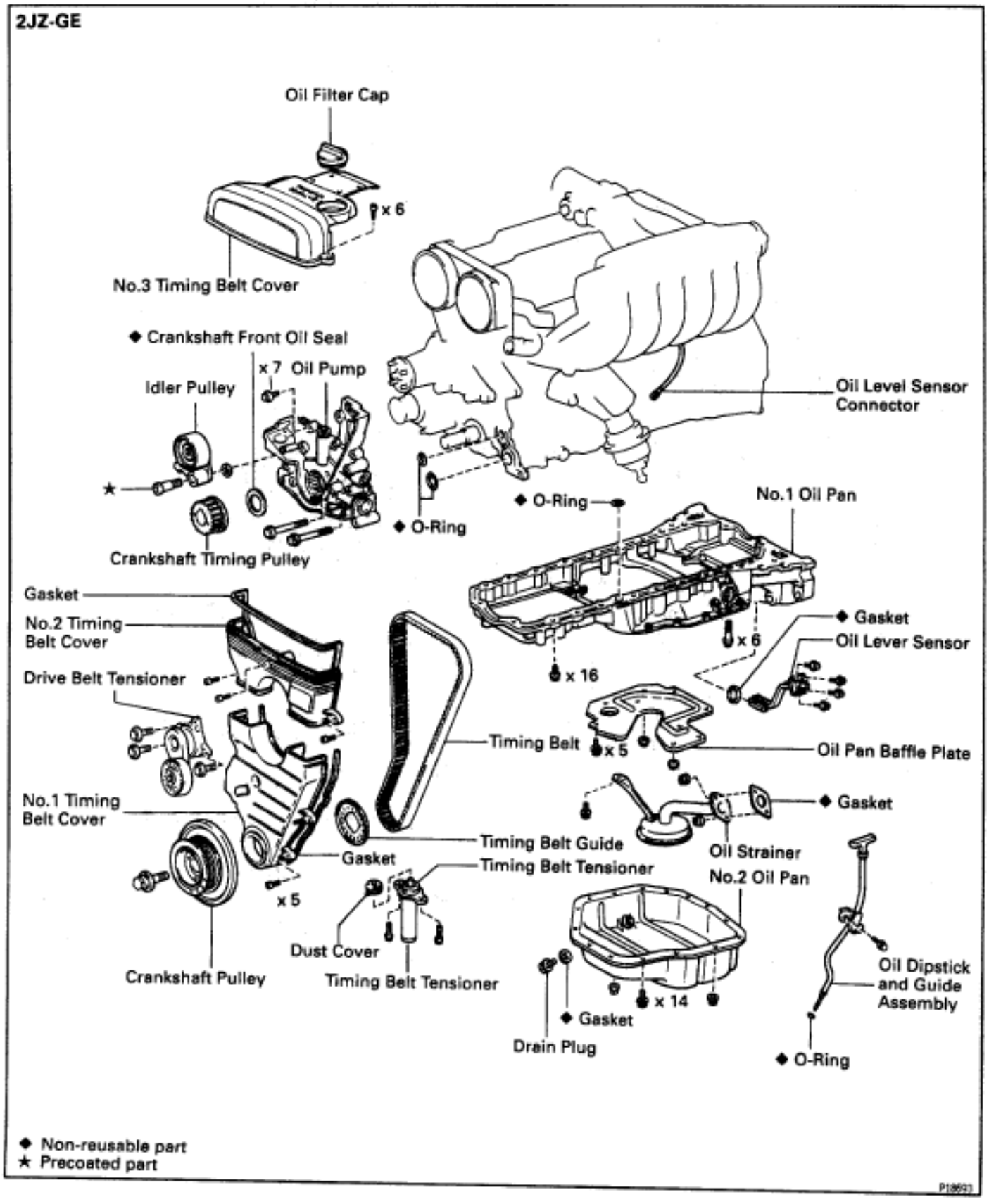

2JZ-GTE

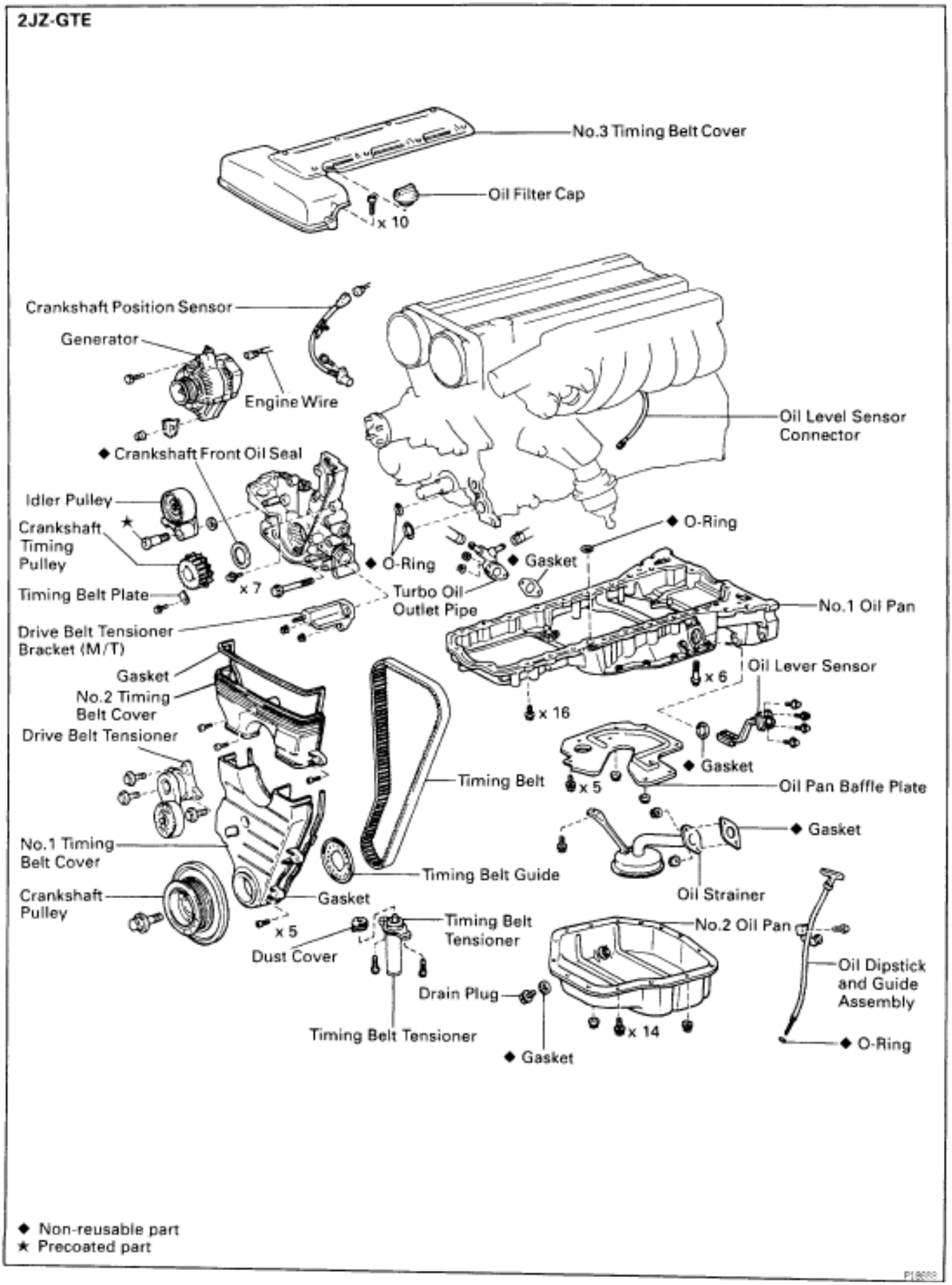

◆ Non-reusable part
★ Precoated part

OIL PUMP REMOVAL

HINT: When repairing the oil pump, the oil pan and strainer should be removed and cleaned.

1. REMOVE ENGINE WITH TRANSMISSION
(See components for engine removal and installation)

2. SEPARATE ENGINE AND TRANSMISSION
(See components for engine & transmission separation and assembly)

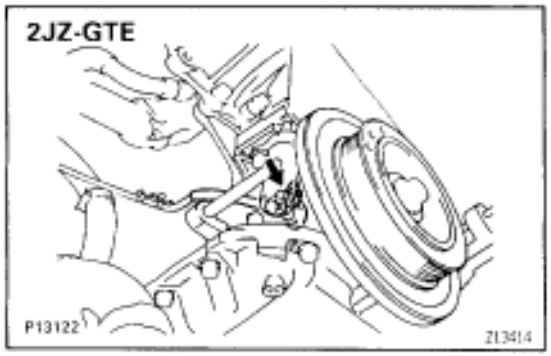

3. INSTALL ENGINE TO ENGINE STAND FOR REMOVAL

4. 2JZ–GTE:
REMOVE GENERATOR

5. 2JZ–GTE:
REMOVE CRANKSHAFT POSITION SENSOR

(a) Disconnect the sensor connector from the bracket.
(b) Disconnect the sensor connector from the wiring connector.
(c) Disconnect the wire clamp from the cylinder block.

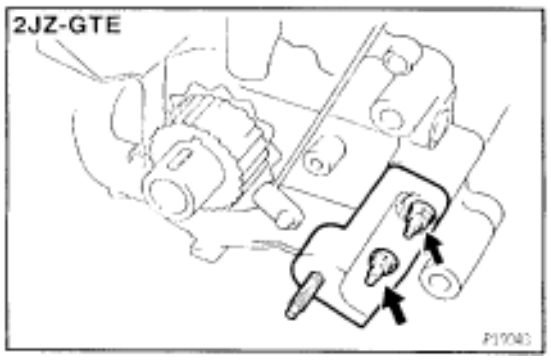

(d) Remove the bolt and position sensor.

6. REMOVE TIMING BELT
(See steps 4 to 8 in timing belt removal in Engine Mechanical)

7. 2JZ–GTE M/T:
REMOVE DRIVE BELT TENSIONER BRACKET
Remove the 2 nuts and tensioner bracket.

8. REMOVE IDLER PULLEY
(See step 15 in timing belt removal in Engine Mechanical)

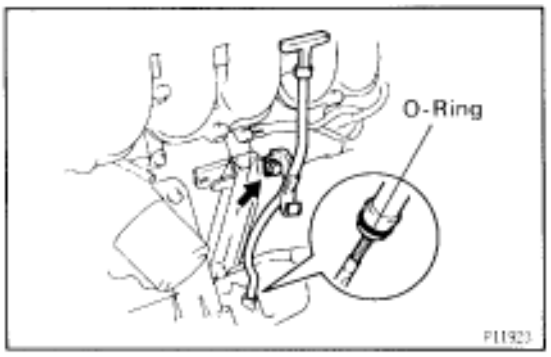

9. REMOVE CRANKSHAFT TIMING PULLEY
(See step 17 in timing belt removal in Engine Mechanical)

10. REMOVE OIL DIPSTICK AND GUIDE ASSEMBLY

(a) Remove the bolt.
(b) Pull out the dipstick guide together with the dipstick.
(c) Remove the O–ring from the dipstick guide.

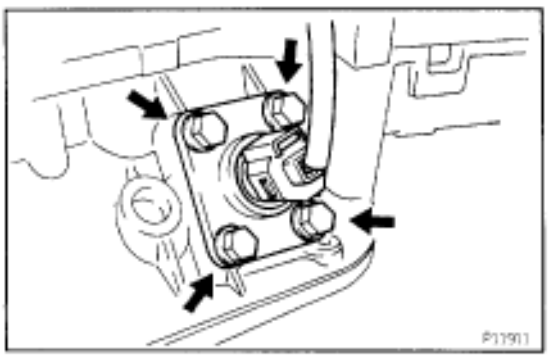

11. REMOVE OIL LEVEL SENSOR

(a) Disconnect the level sensor connector.
(b) Remove the 4 bolts and level sensor.
(c) Remove the gasket from the level sensor.
NOTICE: Be careful not to drop the oil level sensor when removing it.

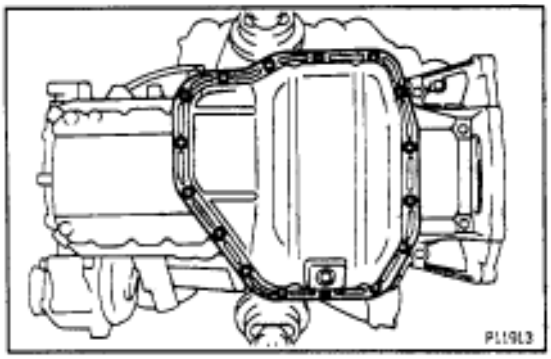

12. REMOVE NO.2 OIL PAN

(a) Remove the 14 bolts and 2 nuts.

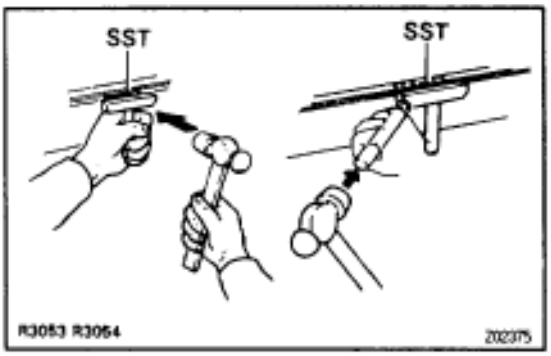

(b) Insert the blade of SST between the No.1 and No.2 oil pan, break the seal of the applied sealer and remove the No.2 oil pan.
SST 09032–00100
NOTICE:

- **Be careful not to damage the No.2 oil pan contact surface of the No.1 oil pan.**
- **Be careful not to damage the oil pan flange.**

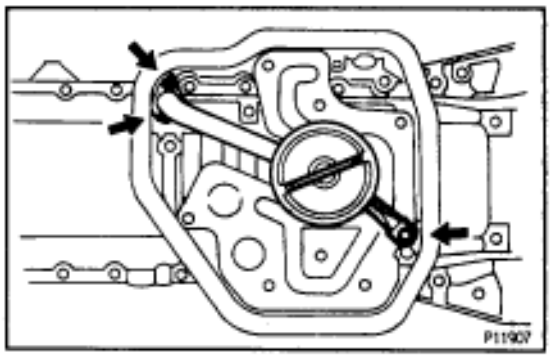

13. REMOVE OIL STRAINER

Remove the bolt, 2 nuts, oil strainer and gasket.

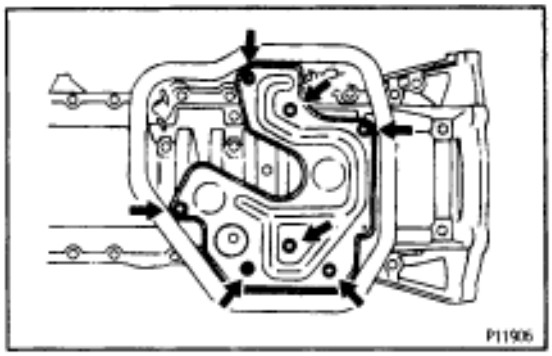

14. REMOVE OIL PAN BAFFLE PLATE

Remove the 5 bolts, 2 nuts and baffle plate.

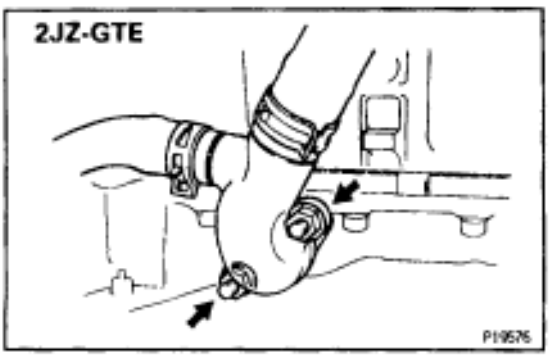

15. 2JZ–GTE:
REMOVE TURBO OIL OUTLET PIPE

(a) Disconnect the 2 turbo oil outlet hoses.
(b) Remove the 2 nuts, oil outlet pipe and gasket.

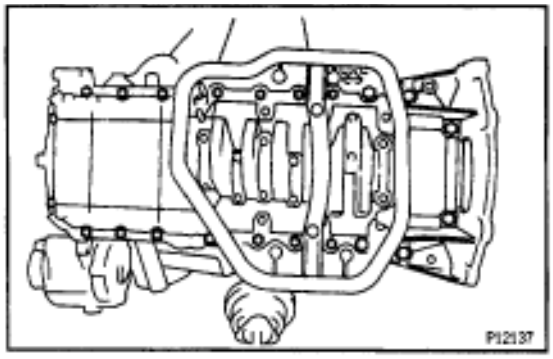

16. REMOVE NO.1 OIL PAN

(a) Remove the 22 bolts.

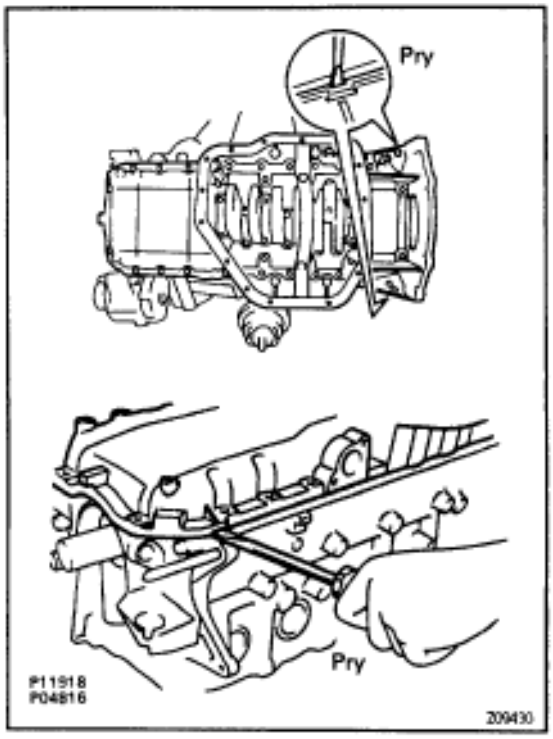

(b) Remove the No.1 oil pan by prying the portions between the cylinder block and No.1 oil pan with a screwdriver.
NOTICE: Be careful not to damage the contact surfaces of the cylinder block and No.1 oil pan.

(c) Remove the O–ring from the cylinder block.

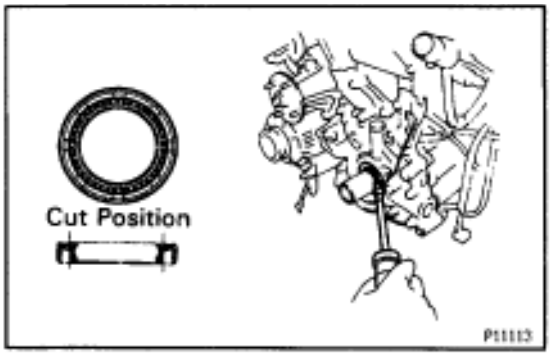

17. REMOVE CRANKSHAFT FRONT OIL SEAL

(a) Using a knife, cut off the oil seal lip.

(b) Using a screwdriver, pry out the oil seal.
NOTICE: Be careful not to damage the crankshaft. Tape the screwdriver tip.

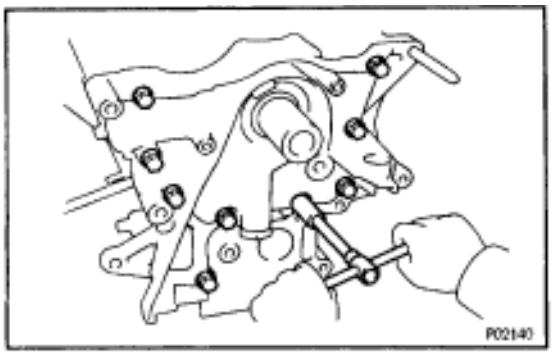

18. REMOVE OIL PUMP

(a) Remove the 9 bolts.

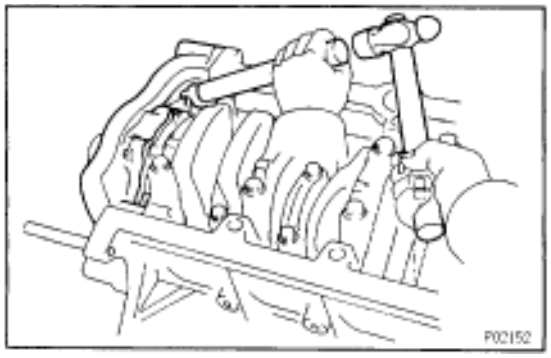

(b) Using a hammer and brass bar, remove the oil pump by carefully tapping the oil pump body.
(c) Remove the 2 O–rings from the cylinder block.

COMPONENTS FOR DISASSEMBLY AND ASSEMBLY

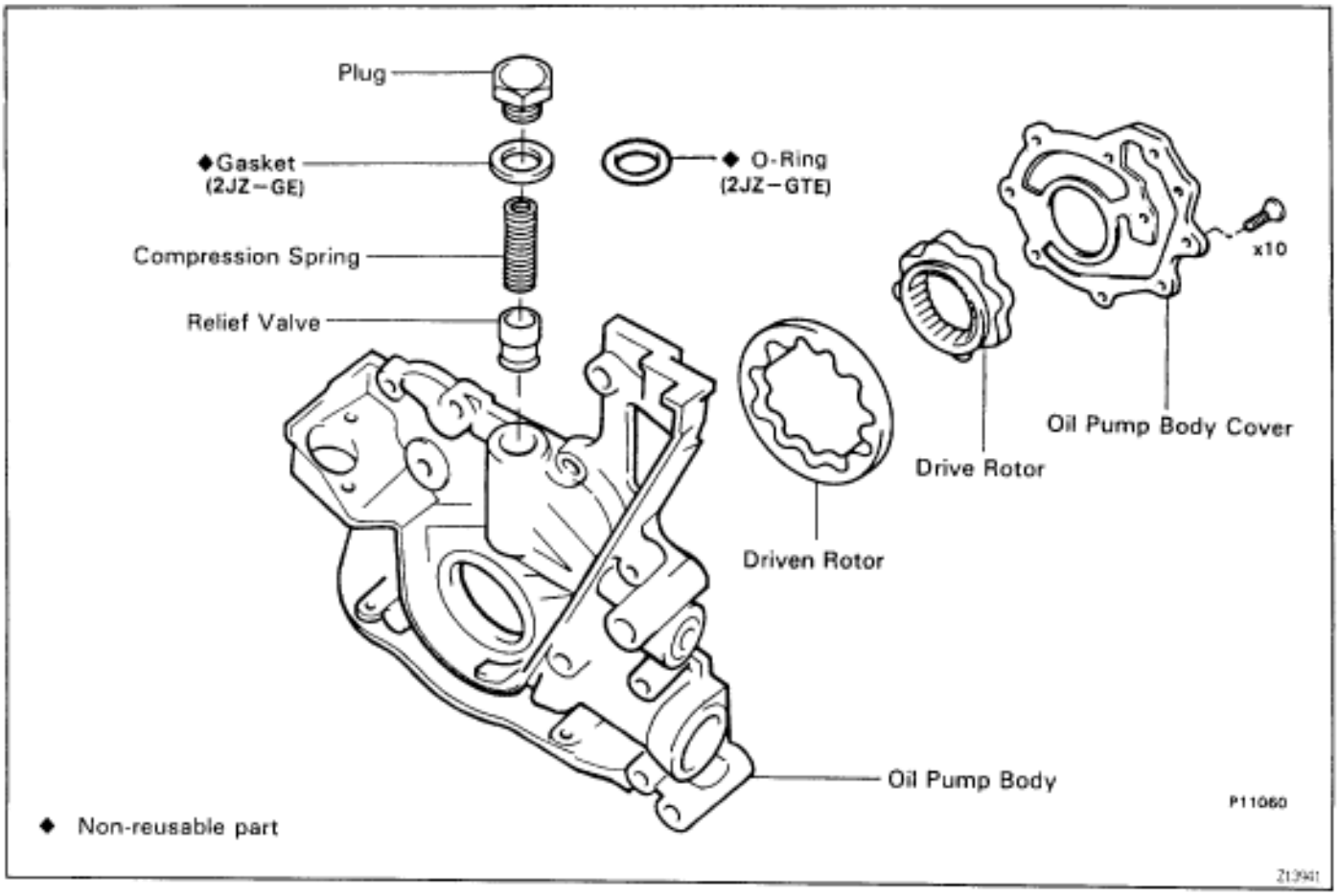

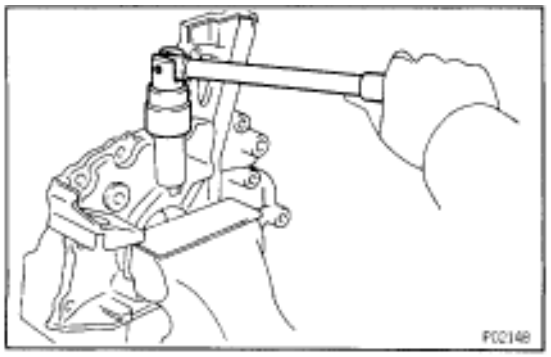

OIL PUMP DISASSEMBLY

Assembly is in the reverse order of disassembly.

1. REMOVE RELIEF VALVE

(a) Slighty mount the pump body in a vise.
NOTICE: Be careful not to damage the pump body.
(b) Remove the plug, gasket (2JZ–GE), O–ring (2JZ–GTE), compression spring and relief valve.

INSTALLATION HINT:
Use a new gasket (2JZ–GE) or O–ring (2JZ–GTE).
Torque:
2JZ–GE
49 N·m (500 kgf·cm, 36 ft·lbf)
2JZ–GTE
29 N·m (300 kgf·cm, 22 ft·lbf)

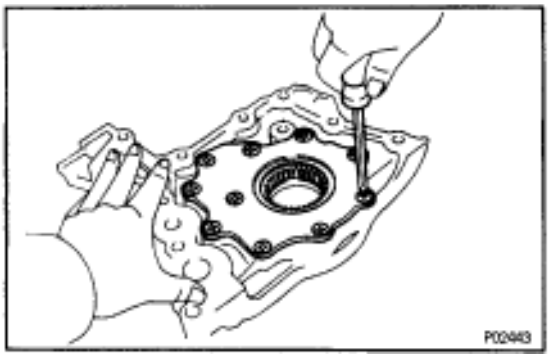

2. REMOVE DRIVE AND DRIVEN ROTORS
Remove the 10 screws, pump body cover, the drive and driven rotors.
Torque: 10 N·m (105 kgf·cm, 8.0 ft·lbf)

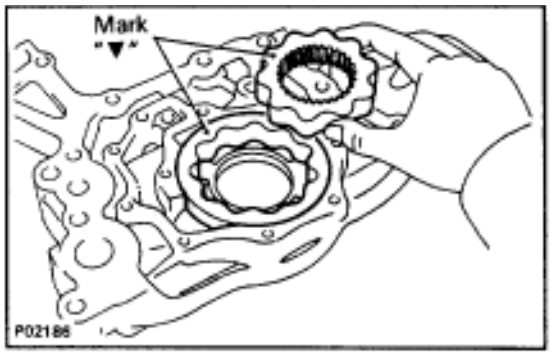

ASSEMBLY HINT: Place the drive and driven rotors into the oil pump body with the mark facing upward.

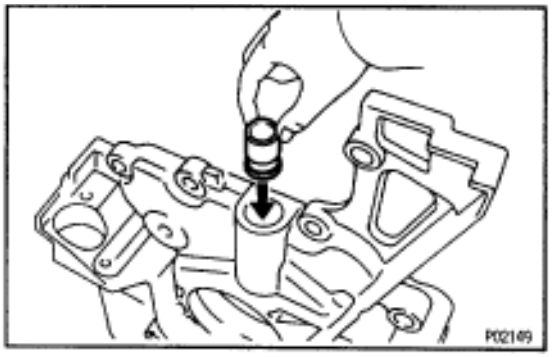

OIL PUMP INSPECTION

1. INSPECT RELIEF VALVE
Coat the valve with engine oil and check that it falls smoothly into the valve hole under its own weight.
If it doesn't, replace the relief valve. If necessary, replace the oil pump assembly.

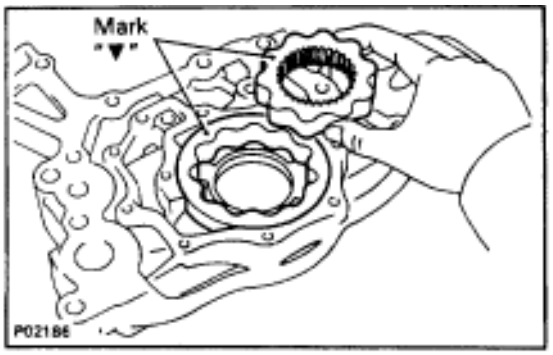

2. INSPECT DRIVE AND DRIVEN ROTORS
A. Place drive and driven rotors into oil pump body
ASSEMBLY HINT: Place the drive and driven rotors into the oil pump body with the mark facing upward.

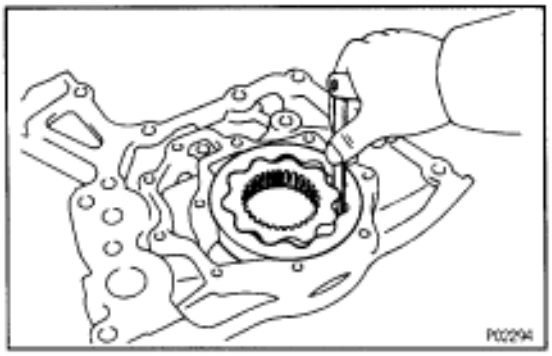

B. Inspect rotor tip clearance

Using a feeler gauge, measure the clearance between the drive and driven rotors.

Standard tip clearance:

2JZ–GE

0.310–0.490 mm (0.0122–0.0193 in.)

2JZ–GTE

0.056–0.326 mm (0.0022–0.0128 in.)

Maximum tip clearance:

2JZ–GE

0.53 mm (0.0209 in.)

2JZ–GTE

0.40 mm (0.0157 in.)

If the tip clearance is greater than maximum, replace the rotors as a set.

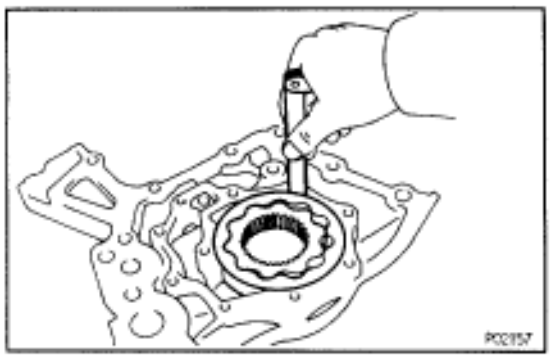

C. Inspect rotor body clearance

Using a feeler gauge, measure the clearance between the driven rotor and pump body.

Standard body clearance:

2JZ–GE

0.100–0.175 mm (0.0039–0.0069 in.)

2JZ–GTE

0.080–0.135 mm (0.0031–0.0053 in.)

Maximum body clearance:

2JZ–GE

0.20 mm (0.0079 in.)

2JZ–GTE

0.16 mm (0.0063 in.)

If the body clearance is greater than maximum, replace the rotors as a set. If necessary, replace the oil pump assembly.

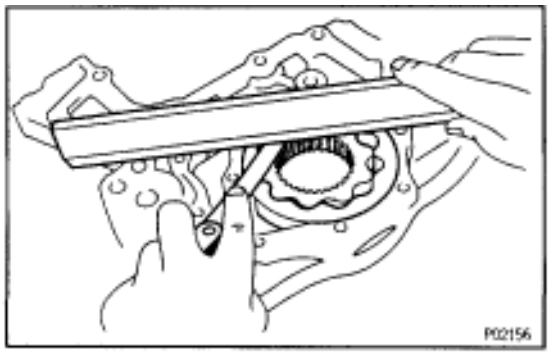

D. Inspect rotor side clearance

Using a feeler gauge and precision straight edge, measure the clearance between the rotors and precision straight edge.

Standard side clearance:

2JZ–GE

0.030–0.090 mm (0.0012–0.0035 in.)

2JZ–GTE

0.020–0.065 mm (0.0007–0.0026 in.)

Maximum side clearance:

2JZ–GE

0.12 mm (0.0047 in.)

2JZ–GTE

0.10 mm (0.0039 in.)

If the side clearance is greater than maximum, replace the rotors as a set. If necessary, replace the oil pump assembly.

E. Remove drive and driven rotors

OIL PUMP INSTALLATION

1. INSTALL OIL PUMP

(a) Remove any old packing (FIPG) material and be careful not to drop any oil on the contact surfaces of the oil pump and cylinder block.

- Using a razor blade gasket scraper, remove all the old packing (FIPG) material from the gasket surfaces and sealing groove.
- Thoroughly clean all components to remove all the debris.
- Using a non–residue solvent, clean both sealing surfaces.

(b) Apply seal packing to the oil pump as shown in the illustration.

Seal packing:

Part No. 08826–00080 or equivalent

- Install a nozzle that has been cut to a 2–3 mm (0.08–0.12 in.) opening.

HINT: Avoid applying an excessive amount to the surface. Be particularly careful near oil passages.

- Parts must be assembled within 5 minutes of application. Otherwise the material must be removed and reapplied.
- Immediately remove nozzle from the tube and reinstall cap.

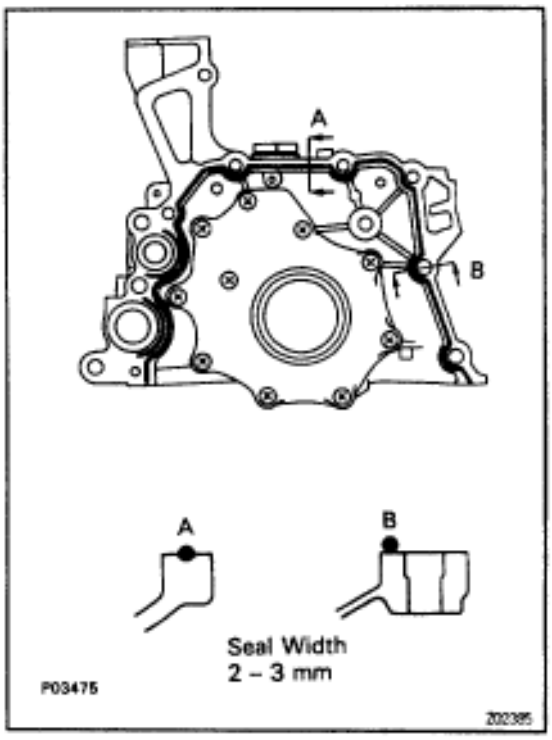

(c) Place 2 new O–rings in position on the cylinder block.

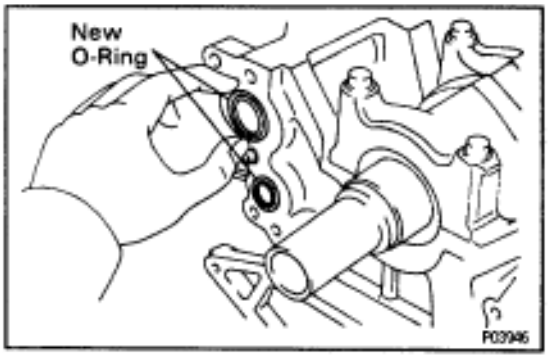

(d) Install the oil pump with the 9 bolts.

Torque: 21 N·m (210 kgf·cm, 15 ft·lbf)

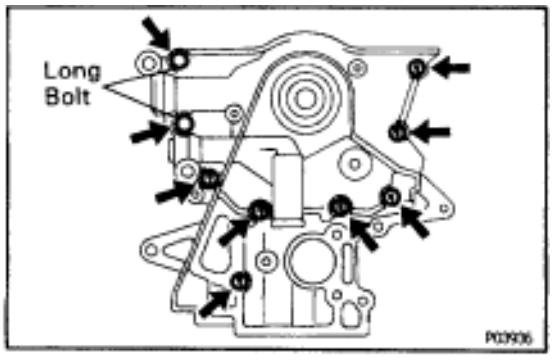

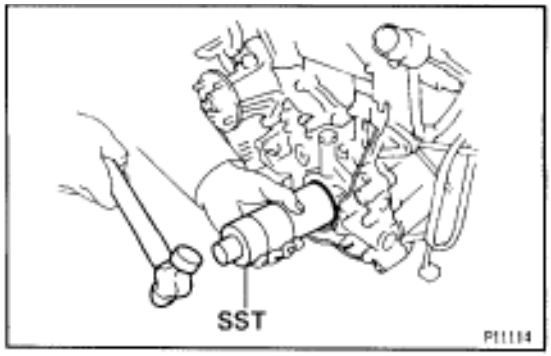

2. INSTALL CRANKSHAFT FRONT OIL SEAL

(a) Apply MP grease to a new oil seal lip.

(b) Using SST and a hammer, tap in the oil seal until its surface is flush with the oil pump body edge.
SST 09316–60010 (09316–00010)

3. INSTALL NO.1 OIL PAN

(a) Remove any old packing (FIPG) material and be careful not to drop any oil on the contact surfaces of the No.1 oil pan and cylinder block.

- Using a razor blade and gasket scraper, remove all the old packing (FIPG) material from the gasket surfaces and sealing groove.
- Thoroughly clean all components to remove all the debris.
- Using a non–residue solvent, clean both sealing surfaces.

NOTICE: Do not use a solvent which will affect the painted surfaces.

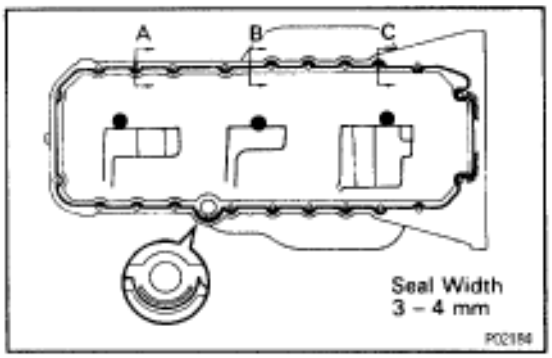

(b) Apply seal packing to the No.1 oil pan as shown in the illustration.

Seal packing:

Parts No. 08826–00080 or equivalent

- Install a nozzle that has been cut to a 3–4 mm (0.12–0.16 in.) opening.

HINT: Avoid applying an excessive amount to the surface.

- Parts must be assembled within 5 minutes of application. Otherwise the material must be removed and reapplied.
- Immediately remove nozzle from the tube and reinstall cap.

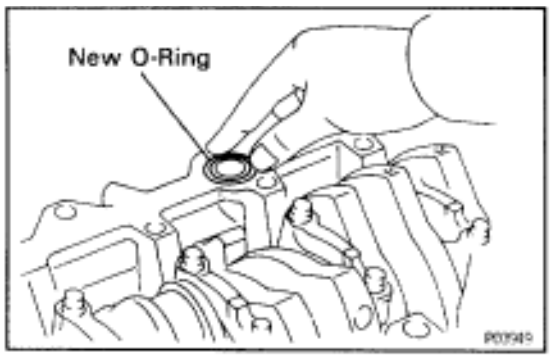

(c) Place a new O–ring in the position on the cylinder block.

(d) Install the No.1 oil pan with the 22 bolts.

Torque:

12 mm head

21 N·m (210 kgf·cm, 15 ft·lbf)

14 mm head

39 N·m (400 kgf·cm, 29 ft·lbf)

4. 2JZ–GTE:
INSTALL TURBO OIL OUTLET PIPE

(a) Install a new gasket and the oil outlet pipe with the 2 nuts.
Torque: 27 N·m (280 kgf·cm, 20 ft·lbf)

(b) Connect the 2 turbo oil outlet hoses.

5. INSTALL OIL PAN BAFFLE PLATE
Torque: 8.8 N·m (90 kgf·cm, 78 in.·lbf)

6. INSTALL OIL STRAINER

Install a new gasket and the oil strainer with the bolt and 2 nuts.

Torque: 8.8 N·m (90 kgf·cm, 78 in.·lbf)

7. INSTALL NO.2 OIL PAN

(a) Remove any old packing (FIPG) material and be careful not to drop any oil on the contact surfaces of the No.1 and No.2 oil pans.

- Using a razor blade and gasket scraper, remove all the old packing (FIPG) material from the gasket surfaces and sealing groove.
- Thoroughly clean all components to remove all the debris.
- Using a non–residue solvent, clean both sealing surfaces.

NOTICE: Do not use a solvent which will affect the painted surfaces.

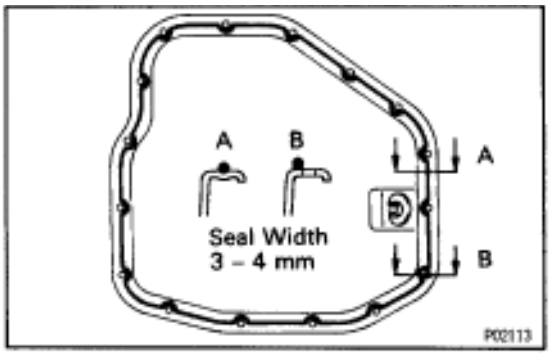

(b) Apply seal packing to the No.2 oil pan as shown in the illustration.

Seal packing:

Part No.08826–00080 or equivalent

- Install a nozzle that has been cut to a 3–4 mm (0.12–0.16 in.) opening.

HINT: Avoid applying an excessive amount to the surface.

- Parts must be assembled within 5 minutes of application. Otherwise the material must be removed and reapplied.
- Immediately remove nozzle from the tube and reinstall cap.

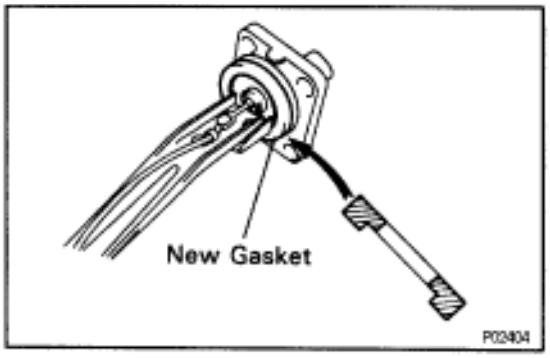

(c) Install the No.2 oil pan with the 14 bolts and 2 nuts.

Torque: 8.8 N·m (90 kgf·cm, 78 in.·lbf)

8. INSTALL OIL LEVEL SENSOR

(a) Install a new gasket to the level sensor.

(b) Install the level sensor with the 4 bolts.

Torque: 5.4 N·m (55 kgf·cm, 48 in.·lbf)

(c) Connect the level sensor connector.

9. INSTALL OIL DIPSTICK GUIDE AND DIPSTICK

(a) Install a new O–ring on the dipstick guide.

(b) Install the guide with the bolt.

10. INSTALL CRANKSHAFT TIMING PULLEY

(See step 1 in timing belt installation in Engine Mechanical)

11. INSTALL IDLER PULLEY

(See step 2 in timing belt installation in Engine Mechanical)

12. 2JZ–GTE M/T:
    INSTALL DRIVE BELT TENSIONER BRACKET
    Torque: 27 N·m (280 kgf·cm, 20 ft·lbf)
13. INSTALL TIMING BELT
    (See step 3 in timing belt installation in Engine Mechanical)
14. 2JZ–GTE:
    INSTALL CRANKSHAFT POSITION SENSOR
    Torque: 8.8 N·m (90 kgf·cm, 78 in.·lbf)
15. 2JZ–GTE:
    INSTALL GENERATOR
16. REMOVE ENGINE STAND FROM ENGINE
17. ASSEMBLY ENGINE AND TRANSMISSION
    (See components for engine removal & transmission separation and assembly)
18. INSTALL ENGINE WITH TRANSMISSION
    (See components for engine removal and installation)

OIL COOLER (2JZ–GTE) COMPONENTS FOR REMOVAL AND INSTALLATION

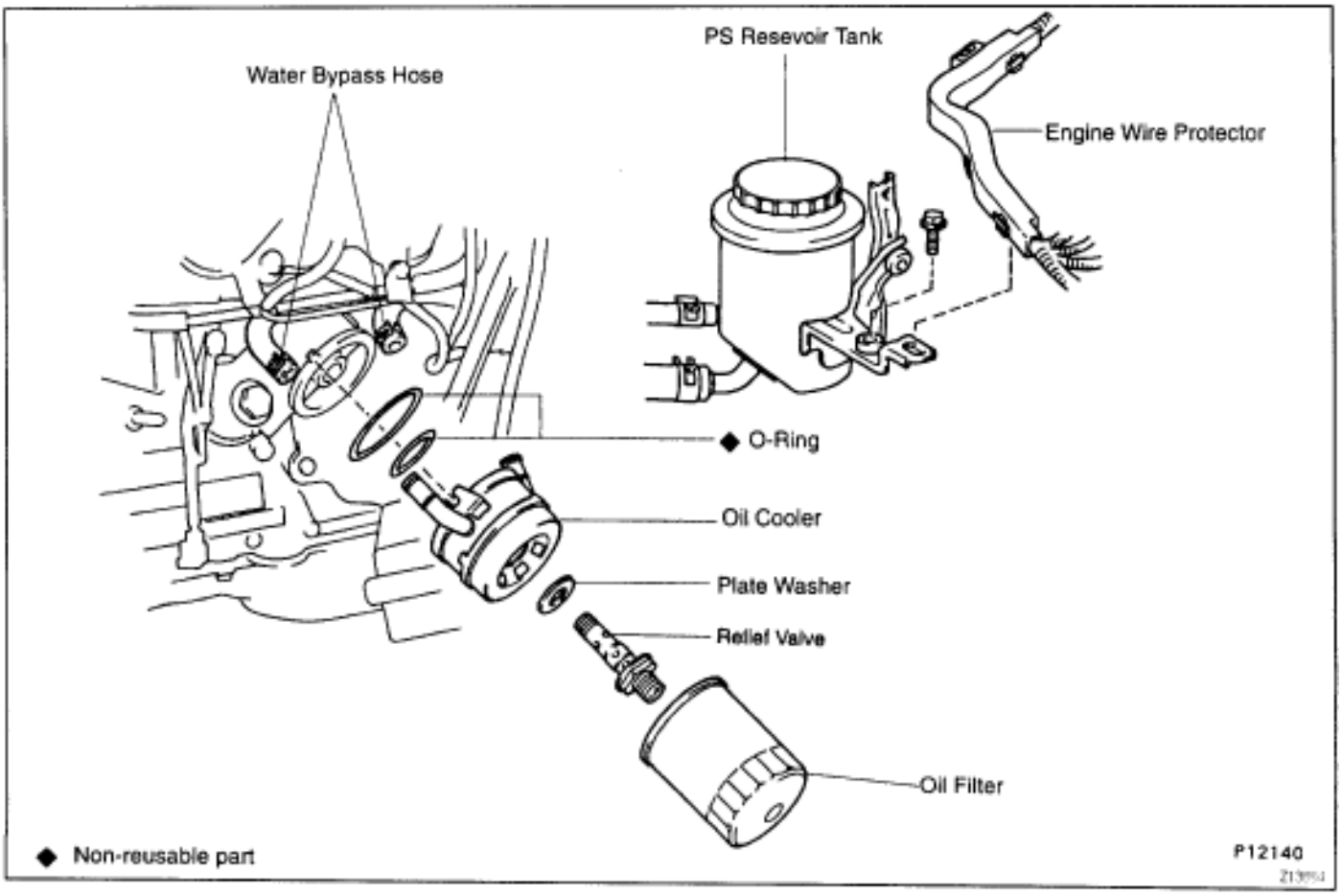

12. 2JZ–GTE M/T:
    INSTALL DRIVE BELT TENSIONER BRACKET
    Torque: 27 N·m (280 kgf·cm, 20 ft·lbf)
13. INSTALL TIMING BELT
    (See step 3 in timing belt installation in Engine Mechanical)
14. 2JZ–GTE:
    INSTALL CRANKSHAFT POSITION SENSOR
    Torque: 8.8 N·m (90 kgf·cm, 78 in.·lbf)
15. 2JZ–GTE:
    INSTALL GENERATOR
16. REMOVE ENGINE STAND FROM ENGINE
17. ASSEMBLY ENGINE AND TRANSMISSION
    (See components for engine removal & transmission separation and assembly)
18. INSTALL ENGINE WITH TRANSMISSION
    (See components for engine removal and installation)

OIL COOLER (2JZ–GTE) COMPONENTS FOR REMOVAL AND INSTALLATION

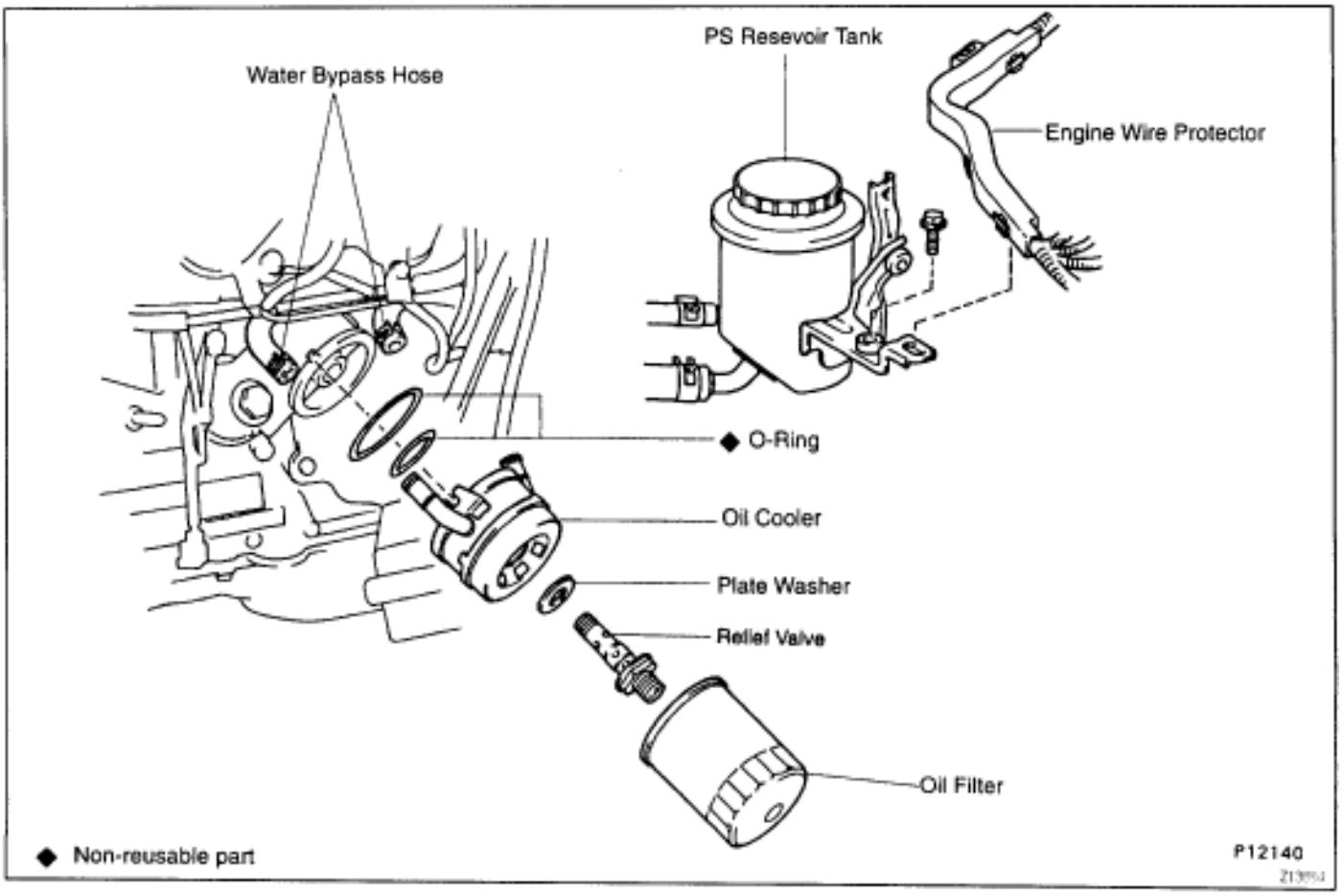

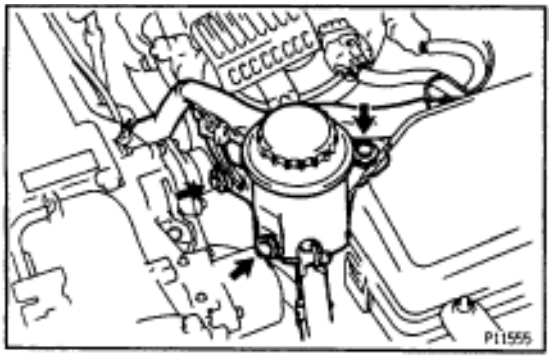

OIL COOLER REMOVAL

1. DISCONNECT PS RESERVOIR TANK WITHOUT DISCONNECTING HOSES

(a) Disconnect the 2 clamps of the engine wire protector from the bracket.

(b) Remove the 3 bolts and disconnect the reservoir tank.

2. DRAIN ENGINE COOLANT

3. REMOVE OIL FILTER

4. DISCONNECT WATER BYPASS HOSES FROM OIL COOLER

5. REMOVE OIL COOLER

(a) Remove the relief valve, plate washer and oil cooler.

(b) Remove the 2 O–rings from the oil cooler.

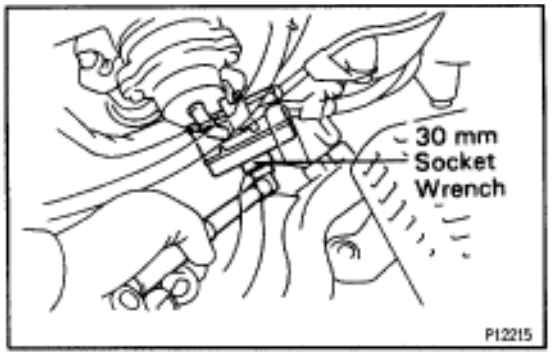

OIL COOLER INSPECTION

1. INSPECT RELIEF VALVE

Push the valve with a wooden stick to check if it is stuck.
If stuck, replace the relief valve.

2. INSPECT OIL COOLER

Check the oil cooler for damage or clogging.
If necessary, replace the oil cooler.

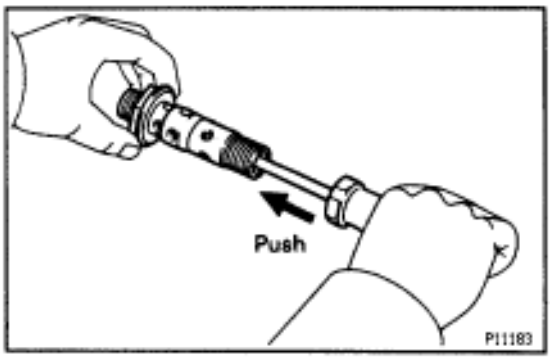

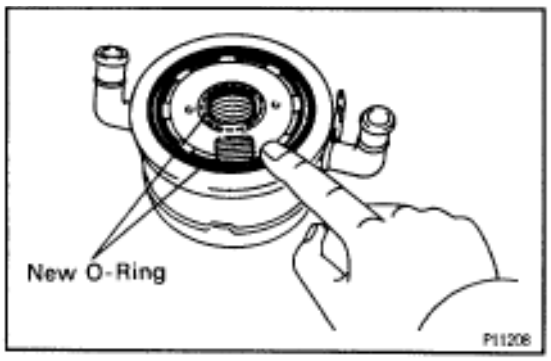

OIL COOLER INSTALLATION

1. INSTALL OIL COOLER

(a) Install 2 new O–rings to the oil cooler.

(b) Apply a light coat of engine oil on the threads and under the head of the relief valve.

(c) Temporarily install the oil cooler with the plate washer and relief valve.

(d) Tighten the relief valve.

Torque: 78 N·m (800 kgf·cm, 58 ft·lbf)

2. CONNECT WATER BYPASS HOSES TO OIL COOLER

3. CONNECT PS RESERVOIR TANK

4. INSTALL OIL FILTER

5. FILL WITH ENGINE COOLANT

6. START ENGINE AND CHECK FOR LEAKS

7. CHECK ENGINE OIL LEVEL

OIL NOZZLE (2JZ–GTE)
COMPONENTS

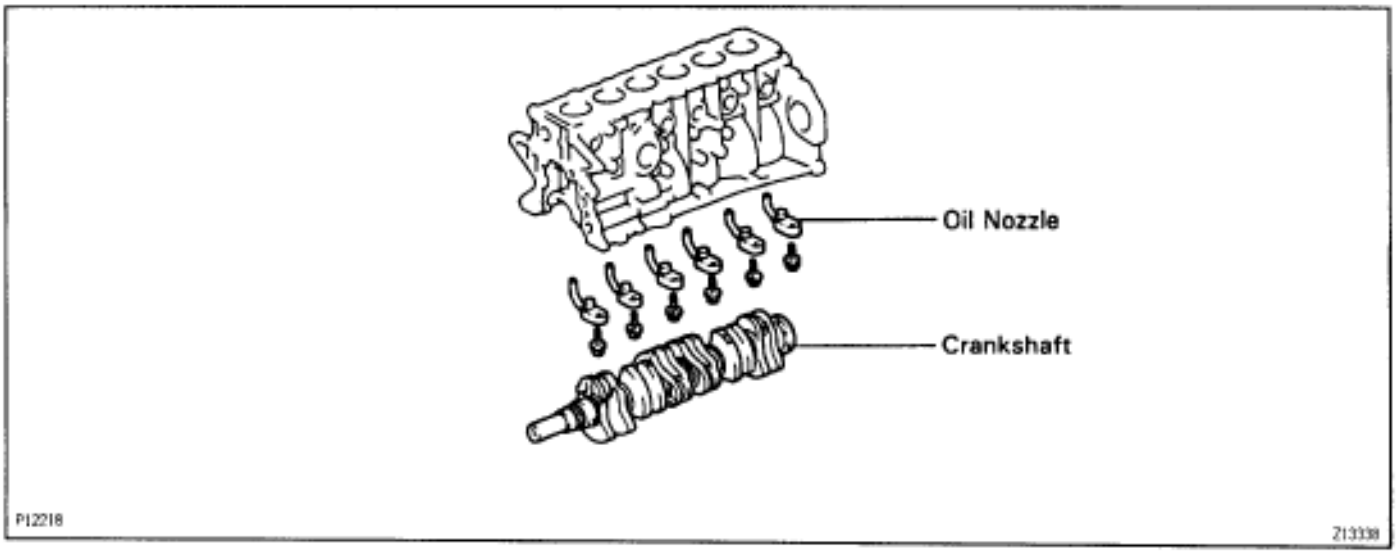

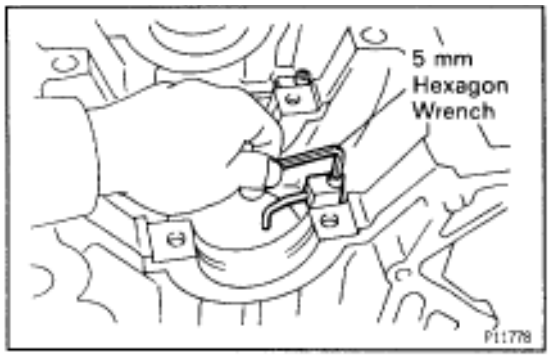

OIL NOZZLES REMOVAL

1. **REMOVE CRANKSHAFT**
   (See step 6 in cylinder block disassembly in Engine Mechanical)
2. **REMOVE OIL NOZZLES (WITH RELIEF VALVES)**
   Using a 5 mm hexagon wrench, remove the bolt and oil nozzle. Remove the 6 oil nozzles.

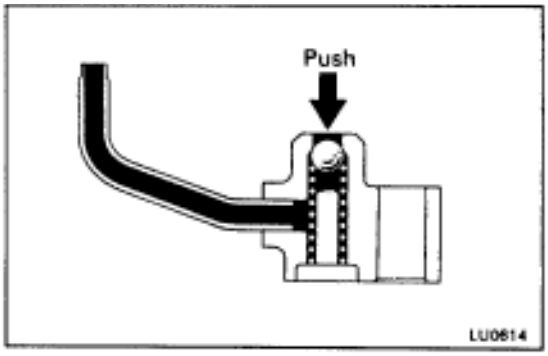

OIL NOZZLES INSPECTION

INSPECT RELIEF VALVES (OIL NOZZLES)
Push the valve with a wooden stick to check if it is stuck.
If stuck, replace the relief valve.

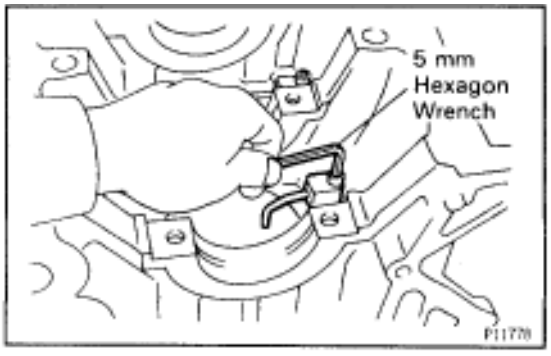

OIL NOZZLES INSTALLATION

1. **INSTALL OIL NOZZLES (WITH RELIEF VALVES)**
   Using a 5 mm hexagon wrench, install the oil nozzle with the bolt. Install the 6 oil nozzles.
   Torque: 8.8 N·m (90 kgf·cm, 78 in.·lbf)
2. **INSTALL CRANKSHAFT**
   (See step 8 in cylinder block assembly in Engine Mechanical)

SERVICE SPECIFICATIONS
SERVICE DATA

Oil pressure	at idle speed at 3,000 rpm (2JZ–GE) or 4,000 rpm (2JZ–GTE)		49 kPa (0.5 kgf/cm^2, 7.1 psi) or more 324–579 kPa (3.3–5.9 kgf/cm^2, 49–84 psi)
Oil pump (2JZ–GE)	Tip clearance	STD	0.310–0.490 mm (0.0122–0.0193 in.)
		Maximum	0.53 mm (0.0209 in.)
	Body clearance	STD	0.100–0.175 mm (0.0039–0.0069 in.)
		Maximum	0.20 mm (0.0079 in.)
	Side clearance	STD	0.030–0.090 mm (0.0012–0.0035 in.)
		Maximum	0.12 mm (0.0047 in.)
Oil pump (2JZ–GTE)	Tip clearance	STD	0.056–0.326 mm (0.0022–0.0128 in.)
		Maximum	0.40 mm (0.0157 in.)
	Body clearance	STD	0.080–0.135 mm (0.0031–0.0053 in.)
		Maximum	0.16 mm (0.0063 in.)
	Side clearance	STD	0.020–0.065 mm (0.0007–0.0026 in.)
		Maximum	0.10 mm (0.0039 in.)

TORQUE SPECIFICATIONS

Part tightened		N·m	kgf·cm	ft·lbf
A/C compressor x Cylinder block	for stud bolt	26	265	19
	for bolt and nut	52	530	38
Oil pressure switch x Cylinder block		14	150	11
Drive belt tensioner damper x Tensioner arm (2JZ–GTE M/T)		20	200	14
Oil drain plug x No.2 oil pan		38	375	27
Oil pump body cover x Oil pump body		10	105	8
Plug x Oil pump body	2JZ–GE	49	500	36
	2JZ–GTE	29	300	22
Oil pump x Cylinder block		21	210	15
No.1 oil pan x Cylinder block	12 mm head	21	210	15
	14 mm head	39	400	29
Turbo oil outlet pipe x No.1 oil pan (2JZ–GTE)		27	280	20
Oil pan baffle plate x No.1 oil pan		8.8	90	78 in.·lbf
Oil strainer x No.1 oil pan		8.8	90	78 in.·lbf
No.2 oil pan x No.1 oil pan		8.8	90	78 in.·lbf
Oil level sensor x No.1 oil pan		5.4	55	48 in.·lbf
Drive belt tensioner bracket x Oil pump (2JZ–GTE)		27	280	20
Crankshaft position sensor x Oil pump (2JZ–GTE)		8.8	90	78 in.·lbf
Oil cooler x Oil filter bracket (2JZ–GTE)		78	800	58
Oil nozzle x Cylinder block (2JZ–GTE)		8.8	90	78 in.·lbf

–MEMO–

ENGINE

ENGINE MECHANICAL

PREPARATION

SST (SPECIAL SERVICE TOOLS)

	09201–10000 Valve Guide Bushing Remover & Replacer Set	
	(09201–01060) Valve Guide Bushing Remover & Replacer 6	
	09202–70010 Valve Spring Compressor	
	09213–70010 Crankshaft Pulley Holding Tool	
	09222–30010 Connecting Rod Bushing Remover & Replacer	
	09223–15030 Oil Seal & Bearing Replacer	Crankshaft rear oil seal
	09248–55040 Valve Clearance Adjust Tool Set	
	(09248–05410) Valve Lifter Press	
	(09248–05420) Valve Lifter Stopper	
	09301–00110 Clutch Guide Tool	2JZ–GE M/T
	09316–60010 Transmission & Transfer Bearing Replacer	
	(09316–00010) Replacer Pipe	Crankshaft front oil seal Camshaft oil seal

	(09316–00050) Replacer “D”	Camshaft oil seal
	09330–00021 Companion Flange Holding Tool	Crankshaft pulley
	09608–30022 Front Hub Bearing Replacer Set	
	(09608–05010) Handle	Crankshaft rear oil seal Valve guide bushing
	09816–30010 Oil Pressure Switch Socket	Knock sensor Oil pressure switch
	09843–18020 Diagnosis Check Wire	
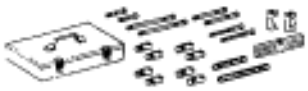	09950–50010 Puller C Set	
	(09951–05010) Hanger 150	Crankshaft pulley Crankshaft timing pulley
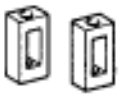	(09952–05010) Slide Arm	Crankshaft pulley Crankshaft timing pulley
	(09953–05020) Center Bolt 150	Crankshaft pulley Crankshaft timing pulley
	(09954–05010) Claw No.1	Crankshaft timing pulley
	(09954–05030) Claw No.3	Camshaft pulley
	09960–10010 Variable Pin Wrench Set	
	(09962–01000) Variable Pin Wrench Arm Assy	Camshaft timing pulley

	(09963–01000) Pin 10	Camshaft timing pulley

RECOMMENDED TOOLS

	09040–00010 Hexagon Wrench Set •	
	09043–50100 Bi–hexagon Wrench 10 mm •	Cylinder head bolt
	09044–00020 Torx Socket E10 •	A/C compressor stud bolt
	09082–00050 TOYOTA Electrical Tester Set • ◆	
	09090–04010 Engine Sling Device •	For suspending engine
	09200–00010 Engine Adjust Kit •	
	09258–00030 Hose Plug Set •	

EQUIPMENT

Caliper gauge	
CO/HC meter	
Compression gauge	
Connecting rod aligner	
Cylinder gauge	
Dial indicator	
Dye penetrant	
Engine tune–up tester	

Heater	
Micrometer	
Mirror	
Magnetic finger	
Piston ring compressor	
Piston ring expander	
Plastigage	
Precision straight edge	
Spring tester	Valve spring
Steel square	Valve spring
Thermometer	
Torque wrench	
Valve seat cutter	
Vernier calipers	
V–block	

SSM (SERVICE SPECIAL MATERIALS)

08826–00080	Seal Packing Black or equivalent (FIPG)	No.1 camshaft bearing cap Cylinder head Rear oil seal retainer
08833–00070	Adhesive 1324, THREE BOND 1324 or equivalent	Drive plate bolt (A/T) Union for oil cooler hose (2JZ–GTE)
08833–00080	Adhesive 1344, THREE BOND 1344, LOCTITE 242 or equivalent	Idler pulley pivot bolt Oil pressure switch

IDLE AND OR 2500 RPM CO HC CHECK

HINT: This check is used only to determine whether or not the idle CO/HC complies with regulations.

1. INITIAL CONDITIONS

(a) Engine at normal operating temperature
(b) Air cleaner installed
(c) All pipes and hoses of air induction system connected
(d) All accessories switched OFF
(e) All vacuum lines properly connected
HINT: All vacuum hoses for EGR system, etc. should be properly connected.
(f) SFI system wiring connectors fully plugged
(g) Ignition timing set correctly
(h) Transmission in neutral position
(i) Tachometer and CO/HC meter calibrated by hand

2. START ENGINE

3. RACE ENGINE AT 2,500 RPM FOR APPROX. 180 SECONDS

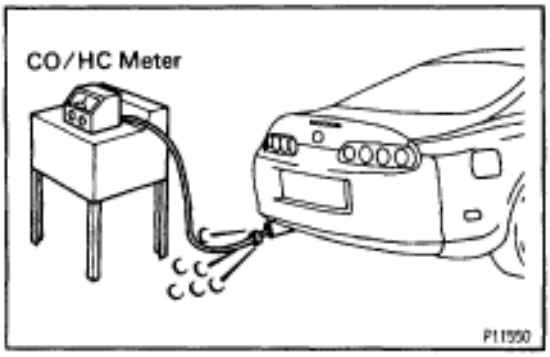

4. INSERT CO/HC METER TESTING PROBE AT LEAST 40 cm (1.3 ft) INTO TAILPIPE DURING IDLING

5. IMMEDIATELY CHECK CO/HC CONCENTRATION AT IDLE AND/OR 2,500 RPM

HINT: When performing the 2 mode (2,500 rpm and idle) test, follow the measurement order prescribed by the applicable local regulations.

Troubleshooting

If the CO/HC concentration does not comply with regulations, troubleshoot in the order given below.

(a) Check (main heated) oxygen sensors operation.
(See oxygen sensor(s) inspection in SFI System)

(b) See the table below for possible causes, and then inspect and correct the applicable causes if necessary.

CO	HC	Phenomenon	Causes
Normal	High	Rough idle	1. Faulty ignitions: • Incorrect timing • Fouled, shorted or improperly gapped plugs • Open or crossed high–tension cords (2JZ–GE) • Cracked distributor cap (2JZ–GE) 2. Incorrect valve clearance 3. Leaky EGR valve 4. Leaky intake and exhaust valves 5. Leaky cylinder
Low	High	Rough idle (Fluctuating HC reading)	1. Vacuum leaks: • PCV hose • EGR valve • Intake manifold • Air intake chamber • Throttle body • IAC valve • Brake booster line 2. Lean mixture causing misfire
High	High	Rough idle (Black smoke from exhaust)	1. Restricted air filter 2. Faulty SFI systems: • Faulty fuel pressure regulator • Clogged fuel return line • Defective ECT switch • Defective turbo pressure sensor (2JZ–GTE) • Faulty ECM • Faulty injector • Faulty throttle position sensor • Faulty VAF meter (2JZ–GE) • Faulty MAF meter (2JZ–GTE)

COMPRESSION CHECK

HINT: If there is lack of power, excessive oil consumption or poor fuel economy, measure the compression pressure.

1. WARM UP AND STOP ENGINE

Allow the engine to warm up to normal operating temperature.

2. 2JZ–GE:

DISCONNECT DISTRIBUTOR CONNECTOR

3. 2JZ–GTE:

DISCONNECT CAMSHAFT POSITION SENSOR CONNECTORS

4. 2JZ–GE:

DISCONNECT HIGH–TENSION CORDS FROM SPARK PLUGS

(See high–tension cords and cord clamps removal in Ignition System)

5. 2JZ–GTE:

REMOVE IGNITION COILS ASSEMBLIES

(See ignition coils removal in Ignition System)

6. REMOVE SPARK PLUGS

7. CHECK CYLINDER COMPRESSION

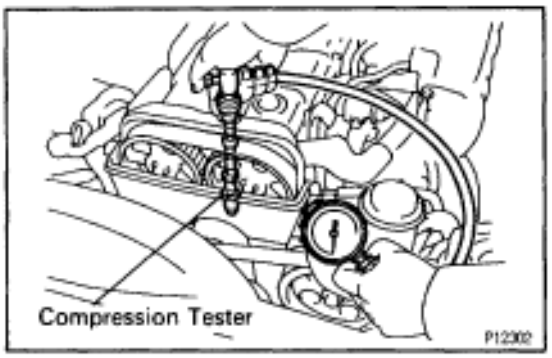

(a) Insert a compression tester into the spark plug hole.

(b) While cranking the engine, measure the compression pressure.

HINT: Always use a fully charged battery to obtain engine revolutions of 250 rpm or more.

(c) Repeat steps (a) through (b) for each cylinder.

NOTICE: This measurement must be done in as short a time as possible.

Standard pressure:

2JZ–GE

1,275 kPa (13.0 kgf/cm^2, 185 psi) or more

2JZ–GTE

1,079 kPa (11.0 kgf/cm^2, 156 psi) or more

Minimum pressure:

2JZ–GE

1,079 kPa (11.0 kgf/cm^2, 156 psi)

2JZ–GTE

883 kPa (9.0 kgf/cm^2, 128 psi)

Difference between each cylinder:

98 kPa (1.0 kgf/cm^2, 14 psi) or less

(d) If the cylinder compression in 1 or more cylinders is low, pour a small amount of engine oil into the cylinder through the spark plug hole and repeat steps (a) through (b) for the cylinder with low compression.

- If adding oil helps the compression, it is likely that the piston rings and/or cylinder bore are probably worn or damaged.
- If pressure stays low, a valve may be sticking or seating improper, or there may be leakage past the gasket.

8. **REINSTALL SPARK PLUGS**
9. **2JZ–GE:**
   RECONNECT HIGH–TENSION CORDS TO SPARK PLUGS
   (See high–tension cords and cord clamps installation in Ignition System)
10. **2JZ–GTE:**
    REINSTALL IGNITION COILS ASSEMBLIES
    (See ignition coils installation in Ignition System)
11. **2JZ–GE:**
    RECONNECT DISTRIBUTOR CONNECTOR
12. **2JZ–GTE:**
    RECONNECT CAMSHAFT POSITION SENSOR CONNECTORS

VALVE CLEARANCE INSPECTION AND ADJUSTMENT (2JZ–GE)

HINT: Inspect and adjust the valve clearance when the engine is cold.

1. REMOVE THROTTLE BODY AND INTAKE AIR CONNECTOR ASSEMBLY
(See steps 1 to 9 in injector removal in SFI System)

2. DISCONNECT HIGH–TENSION CORDS FROM CYLINDER HEAD COVERS
(See high–tension cords and cord clamps removal in Ignition System)

3. REMOVE NO.3, NO.1 AND NO.2 CYLINDER HEAD COVERS

(a) Remove the 4 bolts, 4 nuts and No.3 cylinder head cover.
(b) Remove the 4 bolts, No.1 cylinder head cover and gasket.
(c) Remove the 4 bolts, No.2 cylinder head cover and gasket.

4. SET NO.1 CYLINDER TO TDC/COMPRESSION

(a) Turn the crankshaft pulley, and align its groove with timing mark ”O” of the No.1 timing belt cover.
NOTICE: Always turn the crankshaft clockwise.

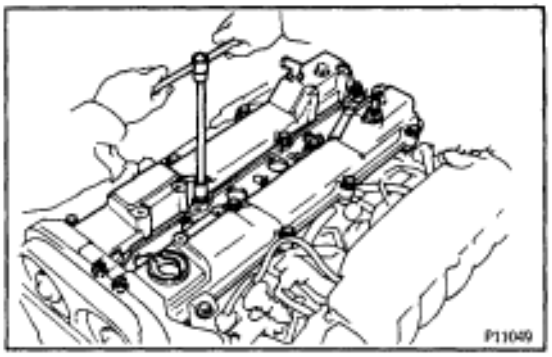

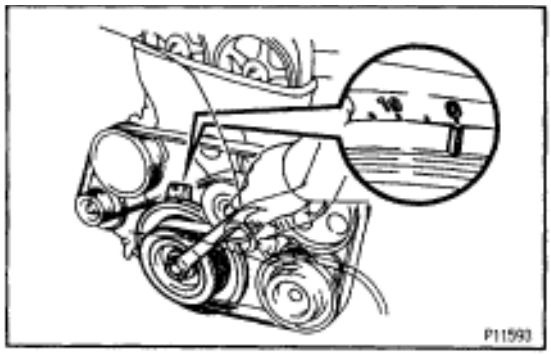

(b) Check that the timing marks of the camshaft timing pulleys are aligned with the timing marks of the No.4 timing belt cover.
If not, turn the crankshaft 1 revolution (360°).

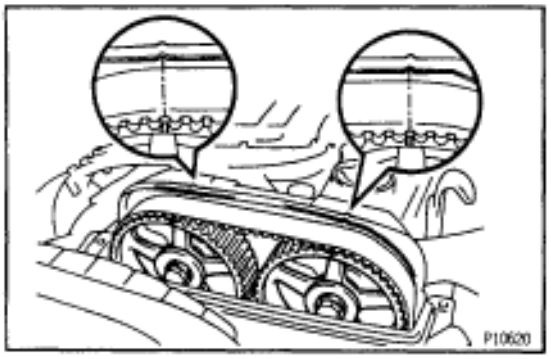

5. INSPECT VALVE CLEARANCE

(a) Check only those valves indicated in the illustration.
- Using a feeler gauge, measure the clearance between the valve lifter and camshaft.
- Record the valve clearance measurements of those that are out of specification. They will be used later to determine the required replacement adjusting shim.

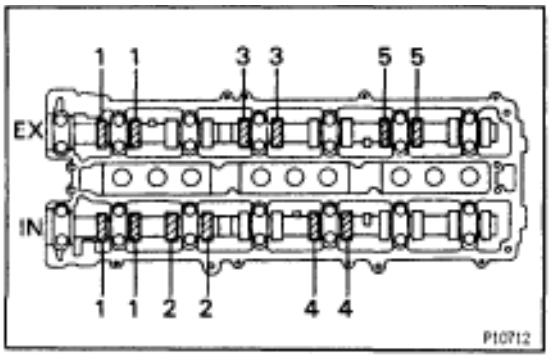

Valve clearance (Cold):

Intake

.15–0.25 mm (0.006–0.010 in.)

Exhaust

.25–0.35 mm (0.010–0.014 in.)

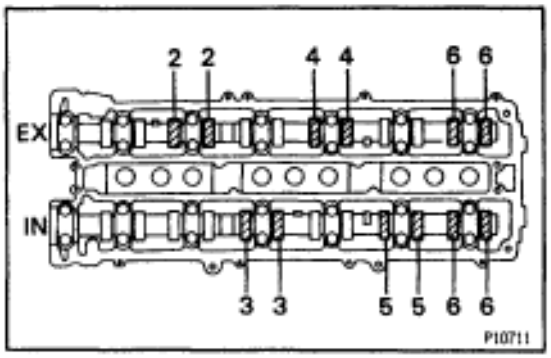

(b) Turn the crankshaft pulley 1 revolution (360°), and align the groove with timing mark "O" of the No.1 timing belt cover.

(c) Check only the valves indicated as shown. Measure the valve clearance. (See procedure in step (a))

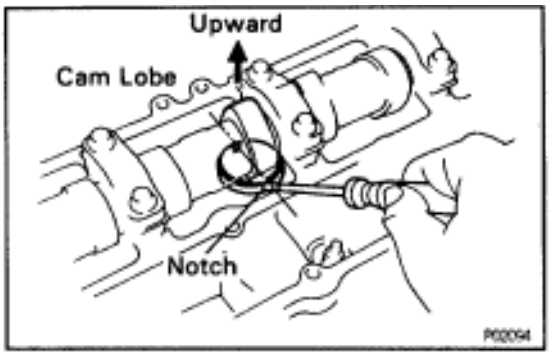

6. ADJUST VALVE CLEARANCE

(a) Remove the adjusting shim.

- Turn the camshaft so that the cam lobe for the valve to be adjusted faces up.
- Turn the valve lifter with a screwdriver so that the notches are perpendicular to the camshaft.

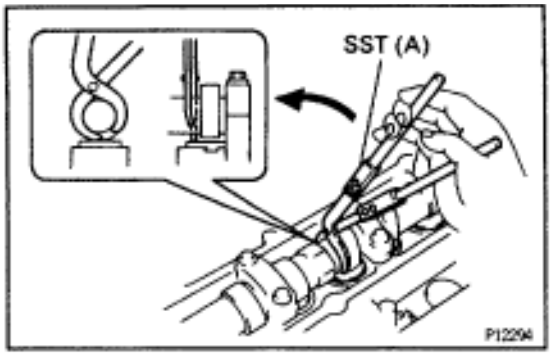

- Using SST (A), hold the camshaft as shown in the illustration.

SST 09248–55040 (09248–05410)

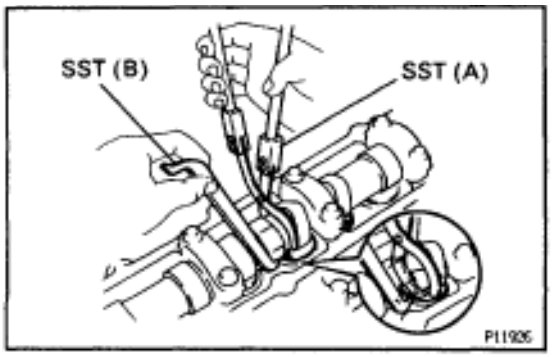

- Using SST (A), press down the valve lifter and place SST (B) between the camshaft and valve lifter. Remove SST (A).

SST 09248–55040 (09248–05410, 09248–05420)

HINT:

- Apply SST (B) at slight angle on the side marked with "7", at the position shown in the illustration.

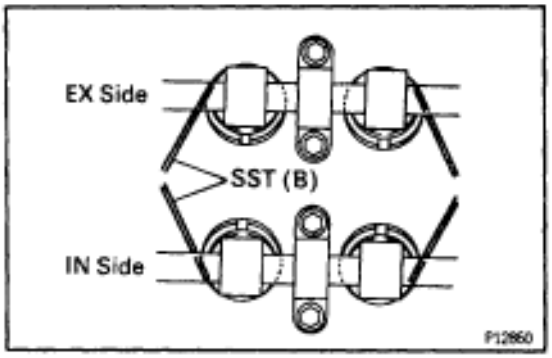

- Insert SST (B) gently from the inside as shown in the illustration.

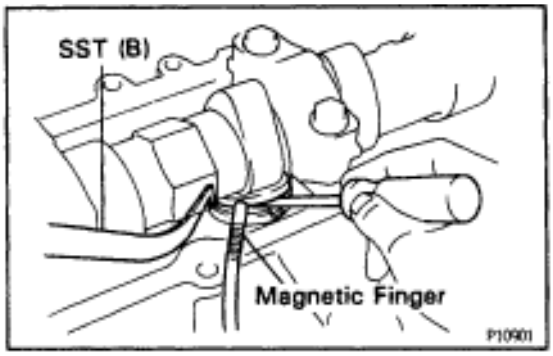

- Using a small screwdriver and a magnetic finger, remove the adjusting shim.

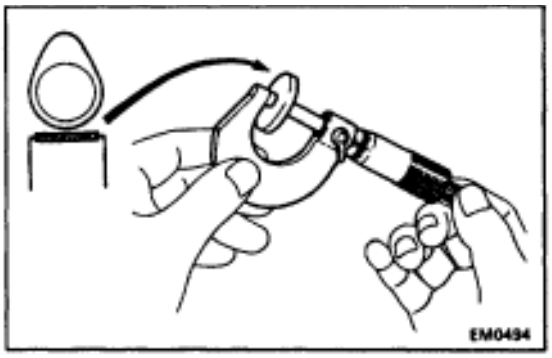

(b) Determine the replacement adjusting shim size according to the following Formula or Charts on the next 2 pages:

- Using a micrometer, measure the thickness of the removed shim.
- Calculate the thickness of a new shim so the valve clearance comes within specified value.

T ..... Thickness of used shim
A ..... Measured valve clearance
N ..... Thickness of new shim

Intake

N = T + (A–0.20 mm (0.008 in.))

Exhaust

N = T + (A–0.30 mm (0.012 in.))

- Select a new shim with a thickness as close as possible to the calculated values.

HINT: Shims are available in 17 sizes in increments of 0.050 mm (0.0020 in.), from 2.500 mm (0.0984 in.) to 3.300 mm (0.1299 in.).

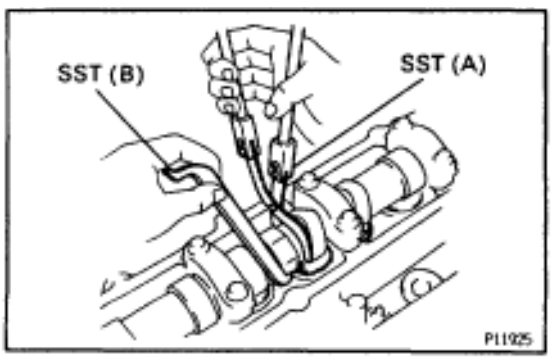

(c) Install a new adjusting shim.

- Place a new adjusting shim on the valve lifter, with imprinted numbers facing down.
- Press down the valve lifter with SST (A), and remove SST (B).

SST 09248–55040

(d) Recheck the valve clearance.

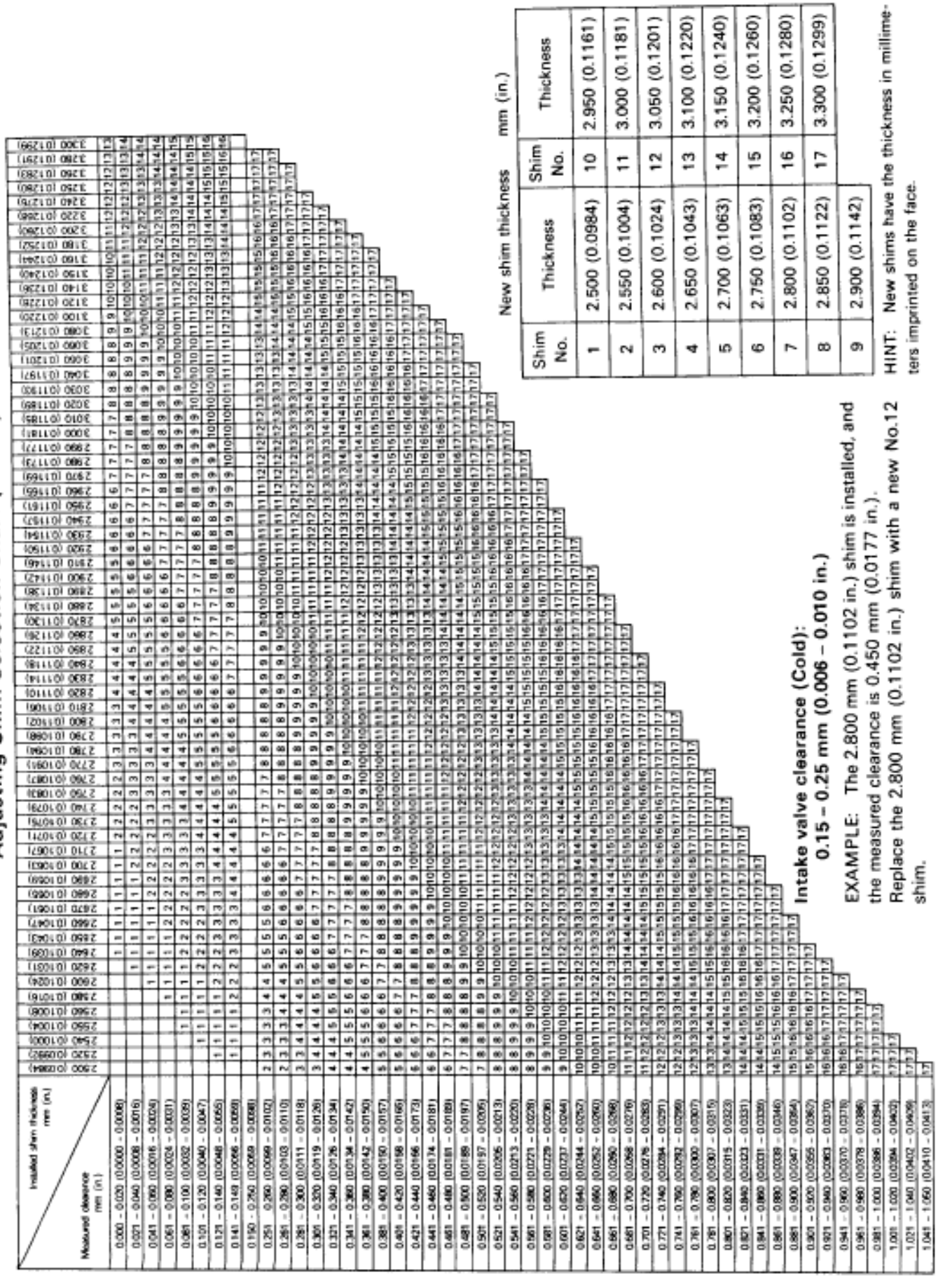
Adjusting Shim Selection Chart (Intake)
Installed shim thickness mm (in.)
Measured clearance mm (in.)
Intake valve clearance (Cold):
0.15 – 0.25 mm (0.006 – 0.010 in.)
EXAMPLE: The 2.800 mm (0.1102 in.) shim is installed, and the measured clearance is 0.450 mm (0.0177 in.).
Replace the 2.800 mm (0.1102 in.) shim with a new No.12 shim.
New shim thickness mm (in.)
Shim No. | Thickness | Shim No. | Thickness
1 | 2.500 (0.0984) | 10 | 2.950 (0.1161)
2 | 2.550 (0.1004) | 11 | 3.000 (0.1181)
3 | 2.600 (0.1024) | 12 | 3.050 (0.1201)
4 | 2.650 (0.1043) | 13 | 3.100 (0.1220)
5 | 2.700 (0.1063) | 14 | 3.150 (0.1240)
6 | 2.750 (0.1083) | 15 | 3.200 (0.1260)
7 | 2.800 (0.1102) | 16 | 3.250 (0.1280)
8 | 2.850 (0.1122) | 17 | 3.300 (0.1299)
9 | 2.900 (0.1142)
HINT: New shims have the thickness in millimeters imprinted on the face.

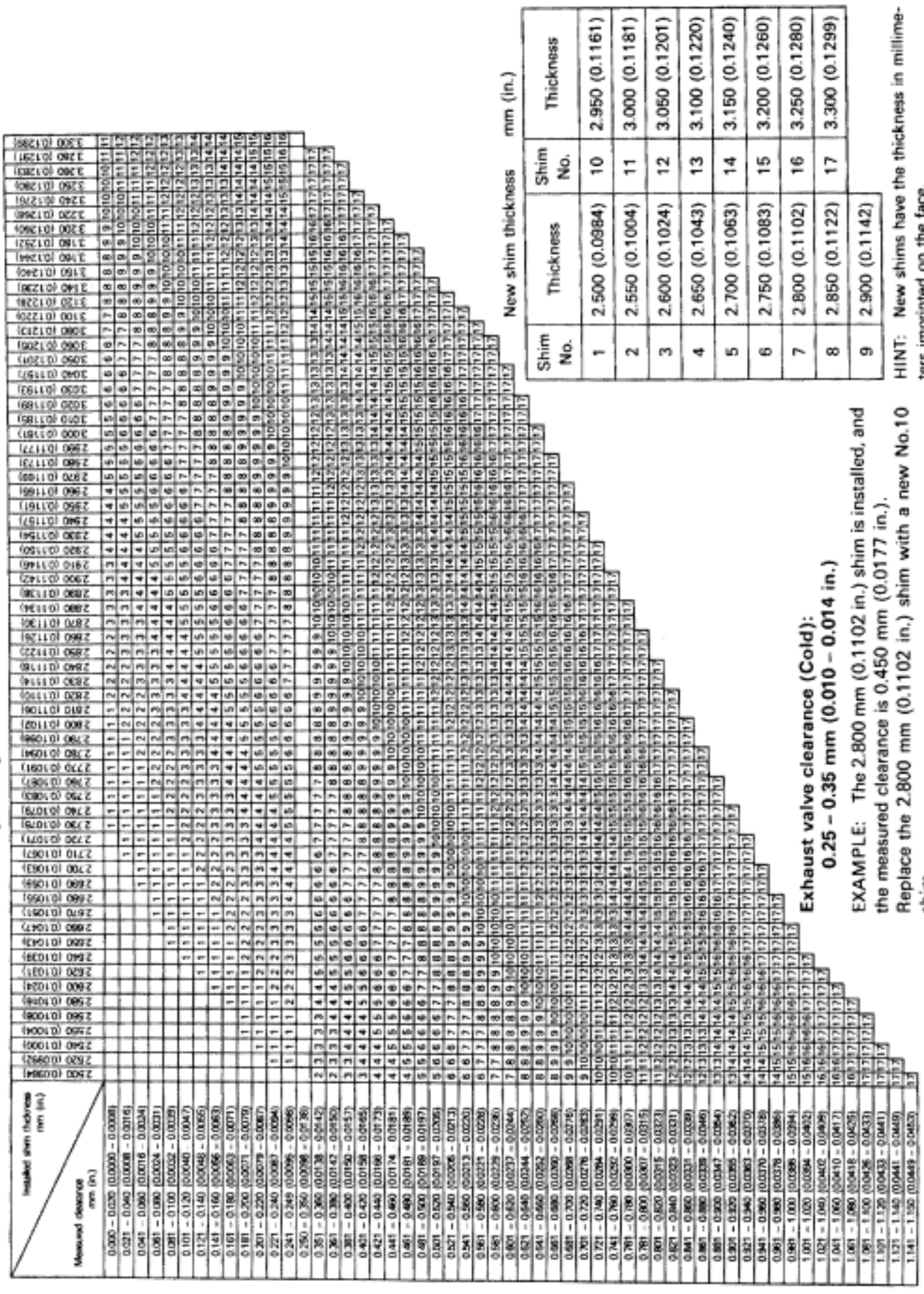
Adjusting Shim Selection Chart (Exhaust)
Installed shim thickness mm (in.)
Measured clearance mm (in.)
New shim thickness mm (in.)
Shim No. | Thickness | Shim No. | Thickness
1 | 2.500 (0.0984) | 10 | 2.950 (0.1161)
2 | 2.550 (0.1004) | 11 | 3.000 (0.1181)
3 | 2.600 (0.1024) | 12 | 3.050 (0.1201)
4 | 2.650 (0.1043) | 13 | 3.100 (0.1220)
5 | 2.700 (0.1063) | 14 | 3.150 (0.1240)
6 | 2.750 (0.1083) | 15 | 3.200 (0.1260)
7 | 2.800 (0.1102) | 16 | 3.250 (0.1280)
8 | 2.850 (0.1122) | 17 | 3.300 (0.1299)
9 | 2.900 (0.1142)
Exhaust valve clearance (Cold):
0.25 – 0.35 mm (0.010 – 0.014 in.)
EXAMPLE: The 2.800 mm (0.1102 in.) shim is installed, and the measured clearance is 0.450 mm (0.0177 in.).
Replace the 2.800 mm (0.1102 in.) shim with a new No.10 shim.
HINT: New shims have the thickness in millimeters imprinted on the face.

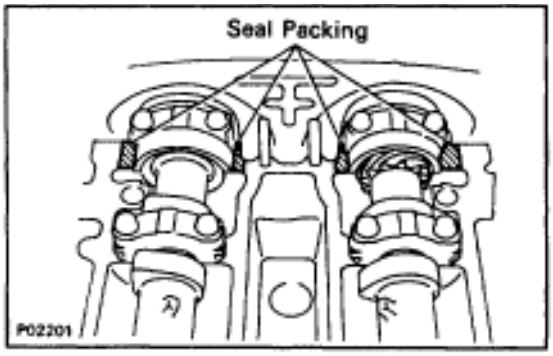

7. REINSTALL NO.2, NO.1 AND NO.3 CYLINDER HEAD COVERS

(a) Remove any old packing (FIPG) material.

(b) Apply seal packing to the cylinder head as shown in the illustration.

Seal packing:

Part No. 08826–00080 or equivalent

(c) Install the gaskets to the No.1 and No.2 cylinder head covers.

(d) Install the No.2 cylinder head cover with the 4 bolts.

Torque: 8.3 N·m (85 kgf·cm, 74 in.·lbf)

(e) Install the No.1 cylinder head cover with the 4 bolts.

Torque: 8.3 N·m (85 kgf·cm, 74 in.·lbf)

(f) Install the No.3 cylinder head cover with the 4 bolts and 4 nuts.

Torque: 8.3 N·m (85 kgf·cm, 74 in.·lbf)

8. RECONNECT HIGH–TENSION CORDS TO CYLINDER HEAD COVERS

(See high–tension cords and cord clamps installation in Ignition System)

9. REINSTALL THROTTLE BODY AND INTAKE AIR CONNECTOR ASSEMBLY

(See steps 8 to 17 in injector installation in SFI System)

VALVE CLEARANCE INSPECTION AND ADJUSTMENT (2JZ–GTE)

HINT: Inspect and adjust the valve clearance when the engine is cold.

1. REMOVE IGNITION COILS ASSEMBLIES

(See ignition coils removal in Ignition System)

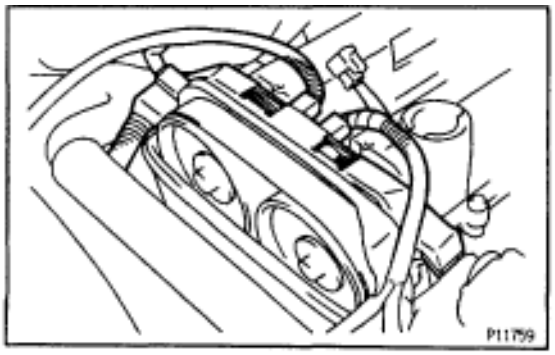

2. DISCONNECT ENGINE WIRE PROTECTOR FROM NO.4 TIMING BELT COVER

(a) Disconnect the engine wire from the 4 wire clamps.

(b) Lift out the engine wire protector from the cylinder head covers.

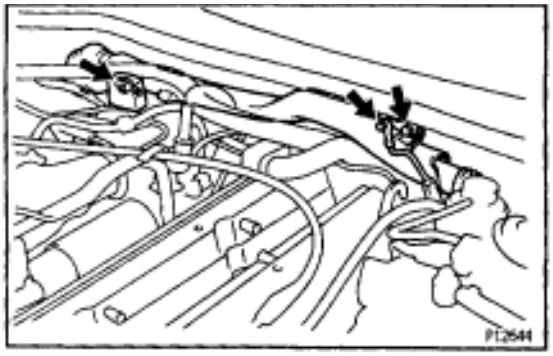

3. DISCONNECT ENGINE WIRE PROTECTOR FROM COWL TOP PANEL

(a) Remove the bolt, and disconnect the ground strap.
(b) Remove the 2 bolts, and lift up the engine wire protector.

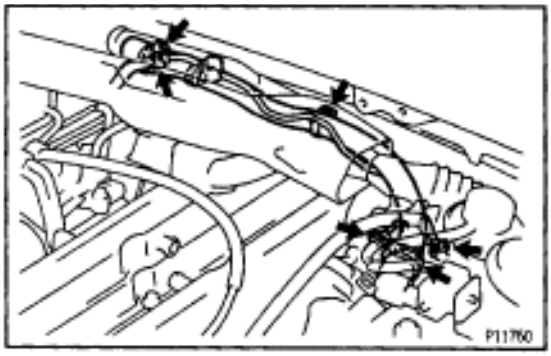

4. REMOVE IAC VALVE PIPE

(a) Disconnect the 5 air hoses from the IAC valve pipe.
(b) Remove the IAC valve pipe from the pipe clamp on the No.1 cylinder head cover.

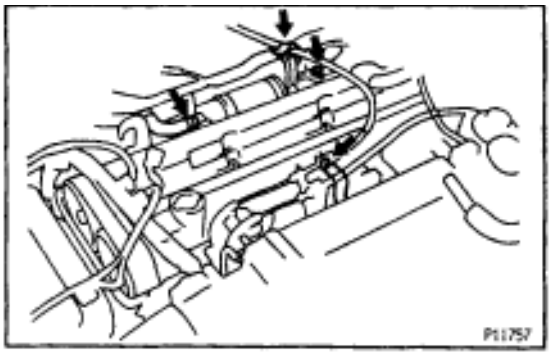

5. REMOVE NO.1 AND NO.2 CYLINDER HEAD COVERS

(a) Disconnect the cruise control actuator cable from the cable bracket.
(b) Remove the bolt holding the VSV to the turbo outlet duct.
(c) Disconnect the 2 PCV hoses from the cylinder head covers.

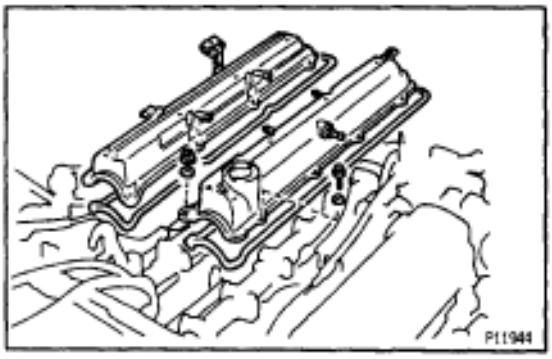

(d) Remove the 6 bolts, 2 nuts, 8 seal washers, No.1 cylinder head cover and gasket.
(e) Remove the 6 bolts, 2 nuts, 8 seal washers, No.2 cylinder head cover and gasket.

6. SET NO.1 CYLINDER TO TDC/COMPRESSION
(See step 4 in valve clearance inspection and adjustment (2JZ–GE))

7. INSPECT VALVE CLEARANCE
(See step 5 in valve clearance inspection and adjustment (2JZ–GE))

8. ADJUST VALVE CLEARANCE
(See step 6 in valve clearance inspection and adjustment (2JZ–GE))

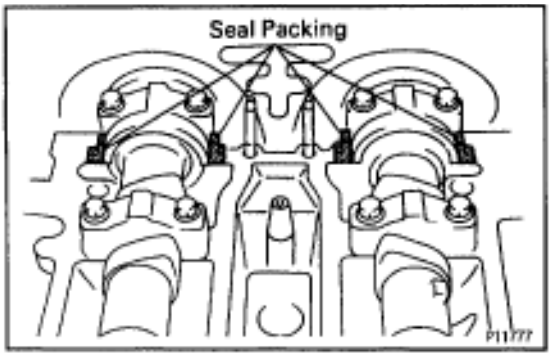

9. REINSTALL NO.1 AND NO.2 CYLINDER HEAD COVERS

(a) Remove any old packing (FIPG) material.

(b) Apply seal packing to the cylinder head as shown in the illustration.

Seal packing:

Part No. 08826–00080 or equivalent

(c) Install the gaskets to the No.1 and No.2 cylinder head covers.

(d) Install the 12 seal washers to the bolts.

(e) Install the No.2 cylinder head cover with the 6 bolts, 4 seal washers and 4 nuts.

Torque: 5.4 N·m (55 kgf·cm, 48 in.·lbf)

(f) Install the No.1 cylinder head cover with the 6 bolts, 4 seal washers and 4 nuts.

Torque: 5.4 N·m (55 kgf·cm, 48 in.·lbf)

(g) Connect the 2 PCV hoses to the cylinder head covers.

(h) Install the bolt holding the VSV to the turbo outlet duct.

(i) Connect the cruise control actuator cable to the cable bracket.

10. RECONNECT ENGINE WIRE PROTECTOR TO NO.4 TIMING BELT COVER

11. REINSTALL IAC VALVE PIPE

12. RECONNECT ENGINE WIRE PROTECTOR TO COWL TOP PANEL

13. REINSTALL IGNITION COILS ASSEMBLIES
(See ignition coils installation in Ignition System)

IGNITION TIMING INSPECTION AND ADJUSTMENT (2JZ–GE)

1. WARM UP ENGINE

Allow the engine to warm up to normal operating temperature.

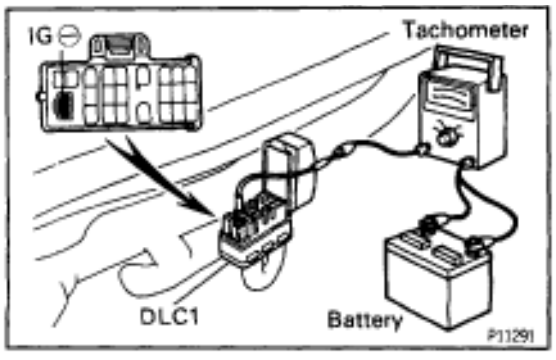

2. CONNECT TACHOMETER AND TIMING LIGHT

Connect the tester probe of a tachometer to terminal IG ⊖ of the DLC1.

NOTICE:

- **Never allow the tachometer terminal to touch ground as it could result in damage to the Igniter and/or ignition coil.**
- **As some tachometers are not compatible with this ignition system, we recommend that you confirm the compatibility of your unit before use.**

3. CHECK IDLE SPEED

(a) Race the engine speed at 2,500 rpm for approx. 90 seconds.

(b) Check the idle speed.

Idle speed:

700 ± 50 rpm

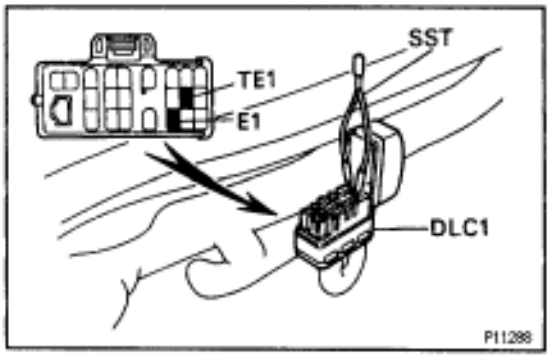

4. ADJUST IGNITION TIMING

(a) Using SST, connect terminals TE1 and E1 of the DLC 1.
SST 09843–18020



(b) Using a timing light, check the ignition timing.

Ignition timing:

10 ± 2° BTDC @ idle

(Transmission in neutral position)

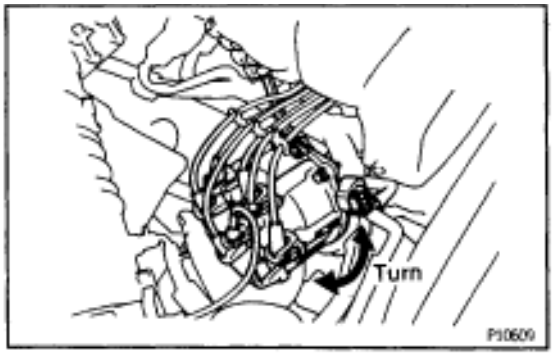

(c) Loosen the nut, and adjust by turning the distributor.

Ignition timing:

10° BTDC @ idle

(Transmission in neutral position)

(d) Tighten the nut, and recheck the ignition timing.

Torque: 19 N·m (195 kgf·cm, 14 ft·lbf)

(e) Remove the SST from the DLC1.
SST 09843–18020

5. FURTHER CHECK IGNITION TIMING

Ignition timing:

7–19° BTDC @ idle

(Transmission in neutral position)

HINT: The timing mark moves in a range between 7° and 19°.

6. DISCONNECT TACHOMETER AND TIMING LIGHT

IGNITION TIMING INSPECTION (2JZ–GTE)

1. WARM UP ENGINE

Allow the engine to warm up to normal operating temperature.

2. CONNECT TACHOMETER AND TIMING LIGHT

(See step 2 in ignition timing inspection and adjustment (2JZ–GE))

3. CHECK IDLE SPEED

(a) Race the engine speed at 2,500 rpm for approx. 90 seconds.

(b) Check the idle speed.

Idle speed:

650 ± 50 rpm

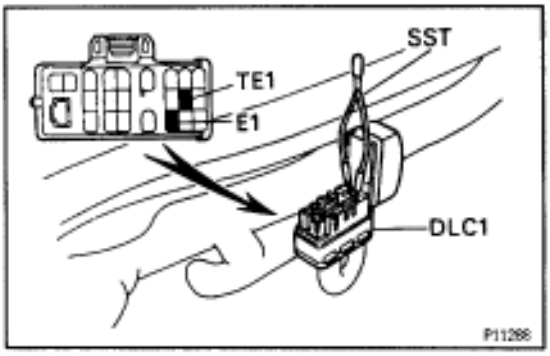

4. CHECK IGNITION TIMING

(a) Using SST, connect terminals TE1 and E1 of the DLC 1.
SST 09843–18020

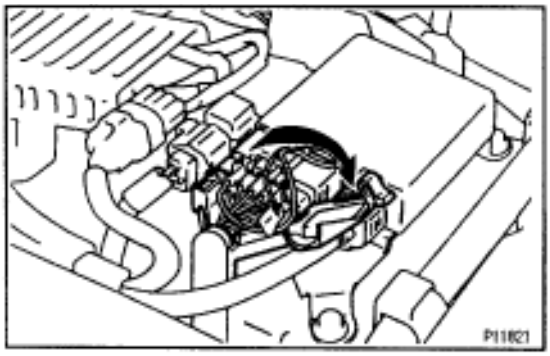

(b) Open the igniter connector cover and remove the green lead wire.

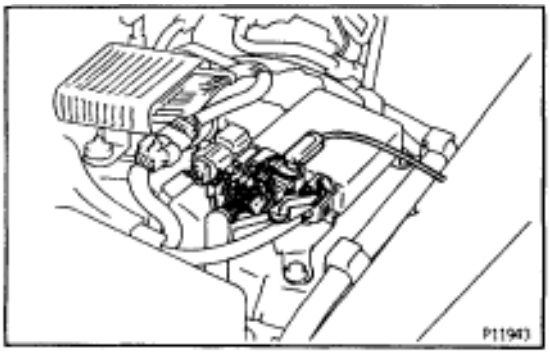

(c) Connect the timing light clip to the green lead wire.

NOTICE:

- **Use a timing light that can detect the primary signal.**
- **After finishing the inspection, make sure the lead wire is stored inside the connector cover.**

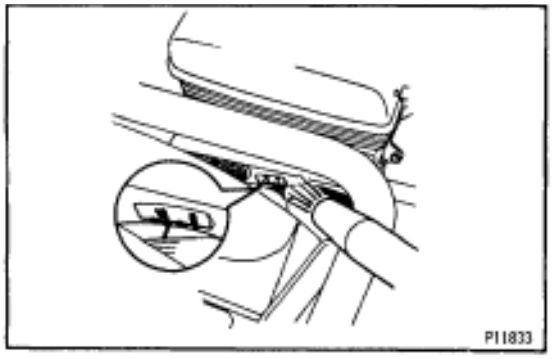

(d) Using a timing light, check the ignition timing.
Ignition timing:
10 ± 2° BTDC @ idle
(Transmission in neutral position)
If the ignition timing is not as specified, check the valve timing. (See step 14 in timing belt installation)
(e) Remove the SST from the DLC1.
SST 09843–18020

5. FURTHER CHECK IGNITION TIMING
Ignition timing:
10–20° BTDC @ idle
(Transmission in neutral position)
HINT: The timing mark moves in a range between 10° and 20°.

6. DISCONNECT TACHOMETER AND TIMING LIGHT

IDLE SPEED INSPECTION

1. INITIAL CONDITIONS
(a) Engine at normal operating temperature
(b) Air cleaner installed
(c) All pipes and hoses of air induction system connected
(d) All accessories switched OFF
(e) All vacuum lines properly connected
HINT: All vacuum hoses for EGR system, etc. should be properly connected.
(f) SFI system wiring connectors fully plugged
(g) Ignition timing set correctly
(h) Transmission in neutral position

2. CONNECT TACHOMETER
(See step 2 in ignition timing inspection and adjustment (2JZ–GE))

3. INSPECT IDLE SPEED
(a) Race the engine speed at 2,500 rpm for approx. 90 seconds.
(b) Check the idle speed.
Idle speed:
2JZ–GE
700 ± 50 rpm
2JZ–GTE
650 ± 50 rpm
If the idle speed is not as specified, check the IAC valve. (See on–vehicle inspection in ISC valve in SFI System)

4. DISCONNECT TACHOMETER

TIMING BELT
COMPONENTS FOR REMOVAL AND INSTALLATION

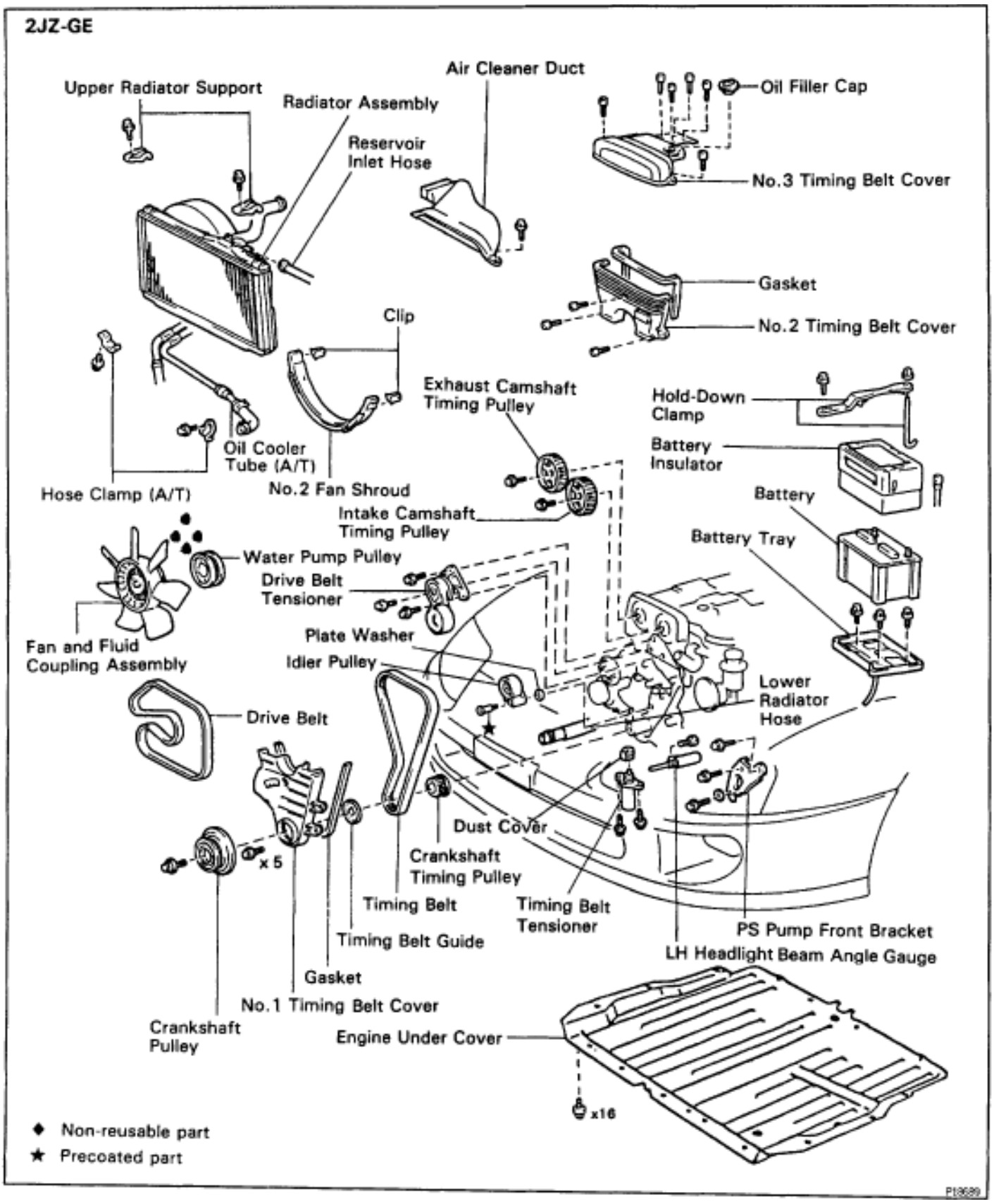

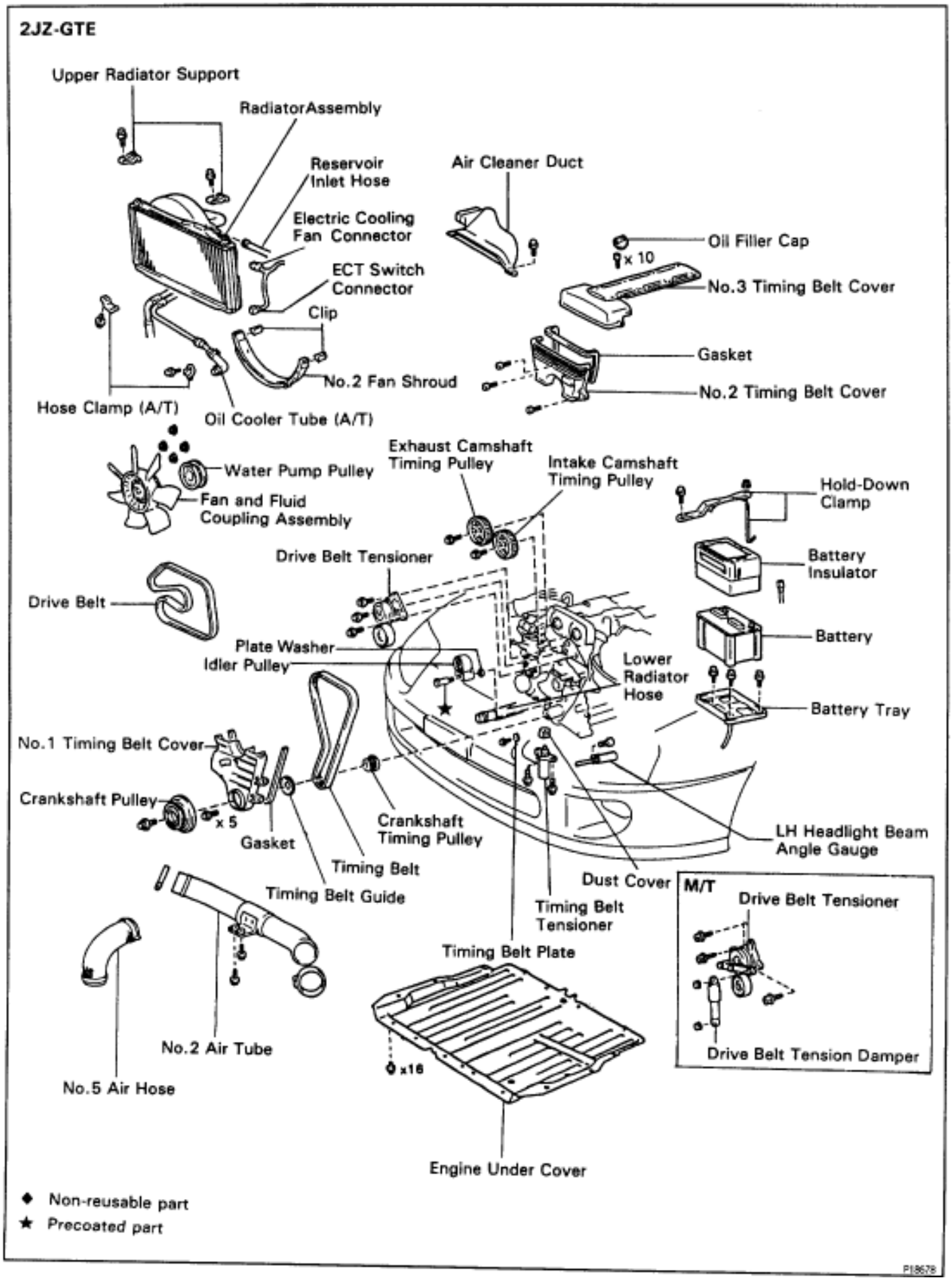
2JZ-GTE
Upper Radiator Support
Radiator Assembly
Reservoir Inlet Hose
Electric Cooling Fan Connector
ECT Switch Connector
Clip
No.2 Fan Shroud
Hose Clamp (A/T)
Oil Cooler Tube (A/T)
Air Cleaner Duct
Oil Filler Cap
x 10
No.3 Timing Belt Cover
Gasket
No.2 Timing Belt Cover
Water Pump Pulley
Fan and Fluid Coupling Assembly
Exhaust Camshaft Timing Pulley
Intake Camshaft Timing Pulley
Drive Belt Tensioner
Drive Belt
Plate Washer
Idler Pulley
Hold-Down Clamp
Battery Insulator
Battery
Battery Tray
Lower Radiator Hose
No.1 Timing Belt Cover
Crankshaft Pulley
x 5
Gasket
Crankshaft Timing Pulley
Timing Belt
Timing Belt Guide
LH Headlight Beam Angle Gauge
Dust Cover
Timing Belt Tensioner
Timing Belt Plate
M/T
Drive Belt Tensioner
Drive Belt Tension Damper
No.2 Air Tube
No.5 Air Hose
x16
Engine Under Cover
◆ Non-reusable part
★ Precoated part
P18678

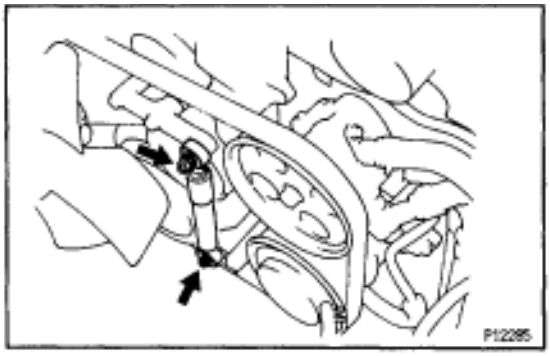

TIMING BELT REMOVAL

1. REMOVE RADIATOR ASSEMBLY
(See radiator removal in Cooling System)

2. 2JZ–GTE M/T:
REMOVE DRIVE BELT TENSIONER DAMPER
Remove the 2 nuts and tensioner damper.

3. REMOVE DRIVE BELT, FAN, FLUID COUPLING ASSEMBLY AND WATER PUMP PULLEY
(See step 6 in water pump removal in Cooling System)

4. REMOVE NO.3 TIMING BELT COVER

(a) Remove the oil filler cap.

(b) 2JZ–GE:
Using a 5 mm hexagon wrench, remove the 6 bolts and belt cover.

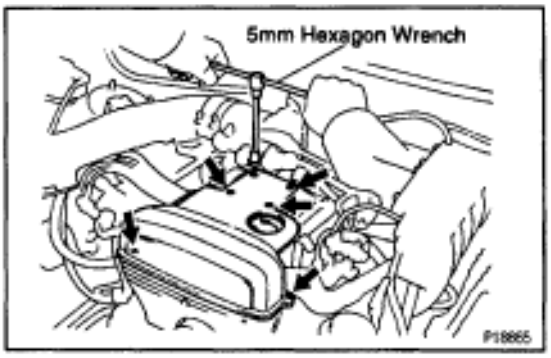

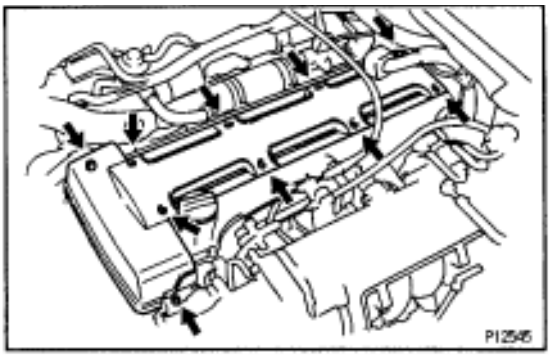

(c) 2JZ–GTE:
Using a 5 mm hexagon wrench, remove the 10 bolts and belt cover.

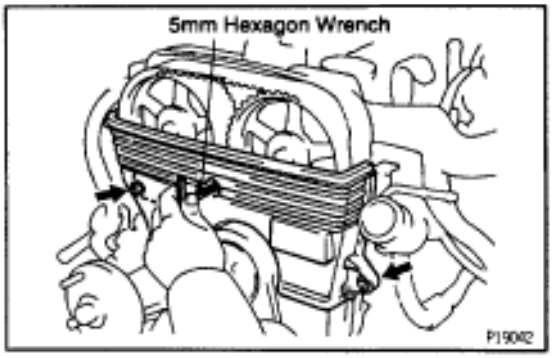

5. REMOVE NO.2 TIMING BELT COVER
Using a 5 mm hexagon wrench, remove the 3 bolts, belt cover and gasket.
If you are unable to loosen the bolt on the right because the PS pump pulley interferes with the hexagon wrench, first remove the pulley.

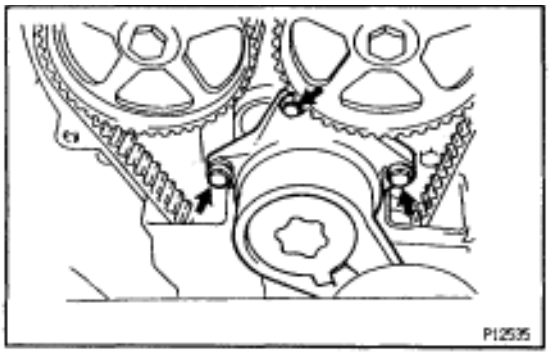

6. REMOVE DRIVE BELT TENSIONER
Remove the 3 bolts and tensioner.



7. SET NO.1 CYLINDER TO TDC/COMPRESSION

(a) Turn the crankshaft pulley, and align its groove with timing mark ”O” of the No.1 timing belt cover.
NOTICE: Always turn the crankshaft clockwise.

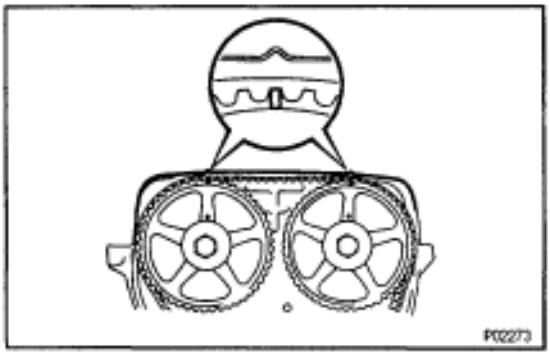

(b) Check that the timing marks of the camshaft timing pulleys are aligned with the timing marks of the No.4 timing belt cover.
If not, turn the crankshaft 1 revolution (360˚).

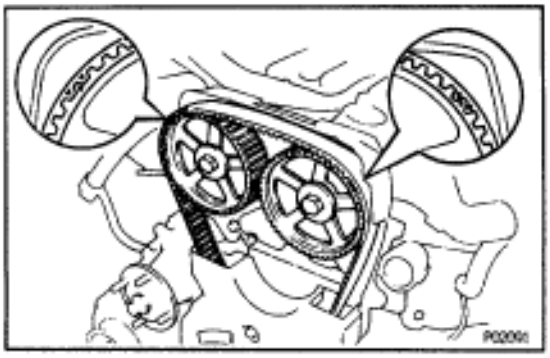

8. REMOVE TIMING BELT FROM CAMSHAFT TIMING PULLEYS

HINT (Re–using timing belt): Place matchmarks on the timing belt and camshaft timing pulleys as shown in the illustration.

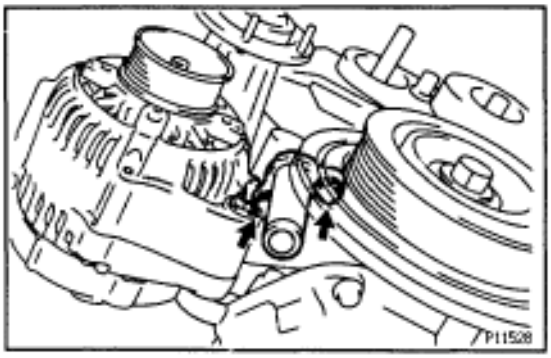

(a) Alternately loosen the 2 bolts, and remove them, the tensioner and dust boot.



(b) Disconnect the timing belt from the camshaft timing pulleys.

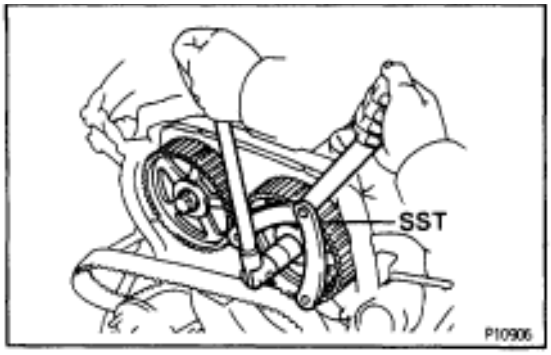

9. REMOVE CAMSHAFT TIMING PULLEYS

Using SST, remove the pulley bolt. Remove the 2 timing pulleys.

SST 09960–10010 (09962–01000, 09963–01000)

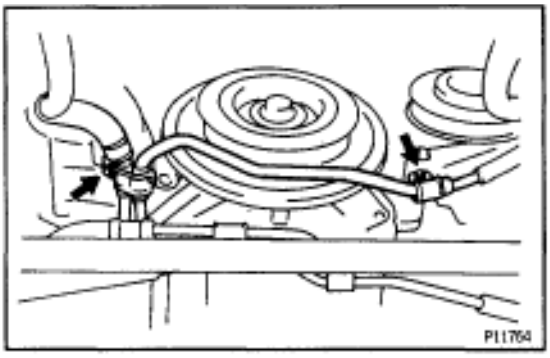

10. A/T:

DISCONNECT OIL COOLER TUBES

Remove the 2 bolts and hose clamps, and disconnect oil cooler tubes.

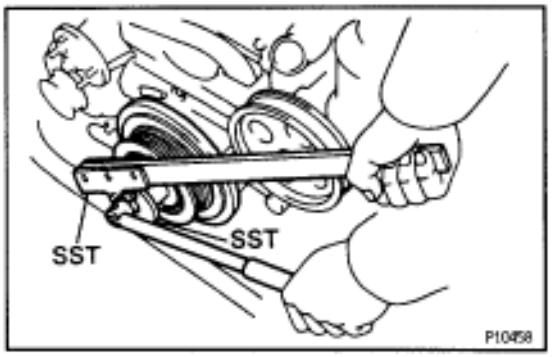

11. REMOVE CRANKSHAFT PULLEY

(a) Using SST, loosen the pulley bolt.
SST 09213–70010, 09330–00021

(b) Remove the pulley bolt.

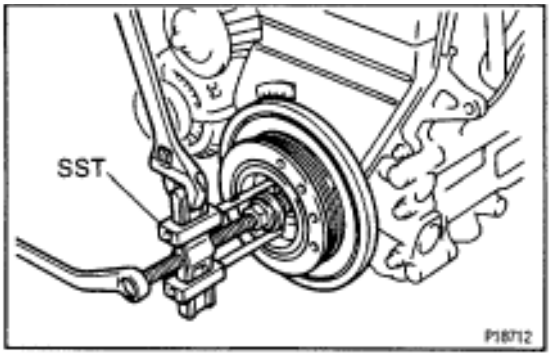

(c) Using SST, remove the pulley.
SST 09950–50010 (09954–05030, 09551–05010, 09552–05010, 09553–05020)

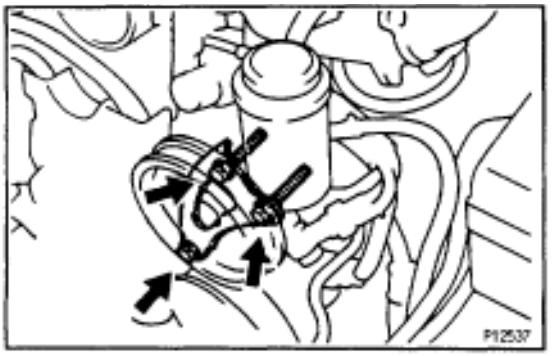

12. 2JZ–GE:

REMOVE PS PUMP FRONT BRACKET

Remove the 3 bolts, plate washer and pump front bracket.

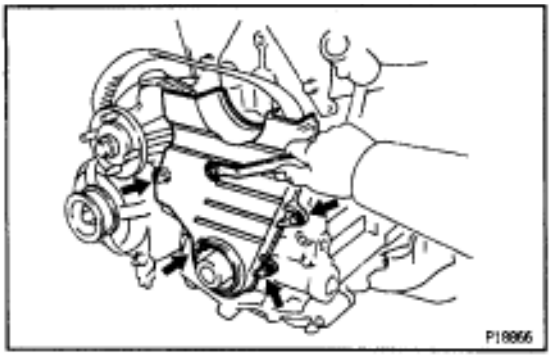

13. REMOVE NO.1 TIMING BELT COVER

Remove the 5 bolts, timing belt cover and gasket.

14. REMOVE TIMING BELT GUIDE

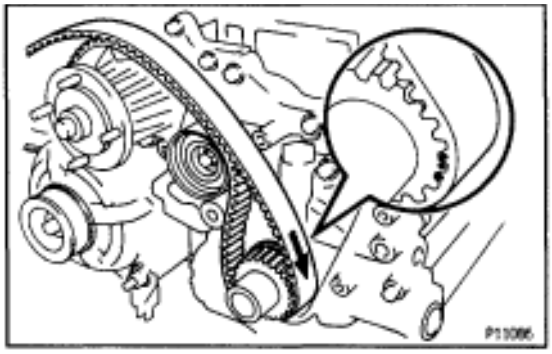

15. REMOVE TIMING BELT

HINT (When re–using timing belt): Draw an arrow on the timing belt in the direction of engine revolution, and place matchmarks on the timing belt and crankshaft timing pulley.

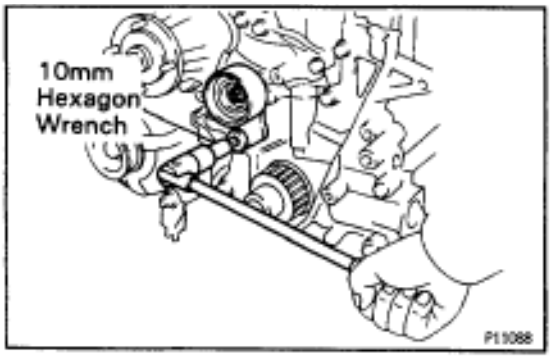

16. REMOVE IDLER PULLEY

Using a 10 mm hexagon wrench, remove the pivot bolt, plate washer and idler pulley.

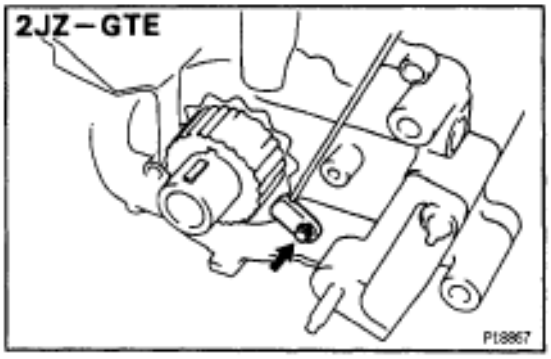

17. REMOVE CRANKSHAFT TIMING PULLEY

(a) 2JZ–GTE:

Remove the bolt and timing belt plate.

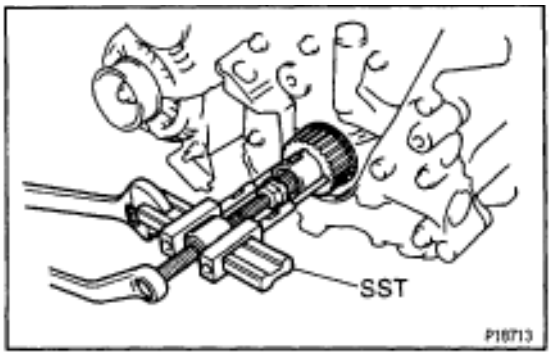

(b) Remove the crankshaft timing pulley.

If the pulley cannot be removed by hand, use SST to remove the crankshaft timing pulley.

SST 09950–50010 (09951–05010, 09952–05010, 09953–05020, 09954–00010)

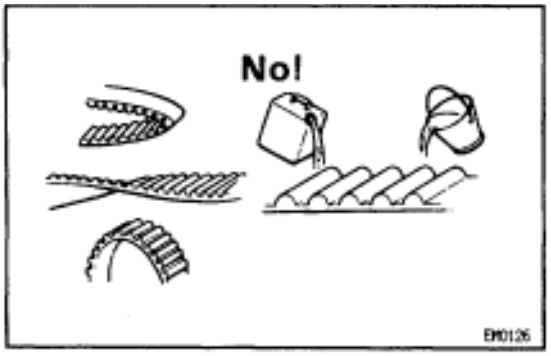

TIMING BELT COMPONENTS INSPECTION

1. INSPECTION TIMING BELT

NOTICE:

- **Do not bend, twist or turn the timing belt inside out.**
- **Do not allow the timing belt to come into contact with oil, water or steam.**
- **Do not utilize timing belt tension when installing or removing the mount bolt of the camshaft timing pulley.**

If there are any defects, as shown in the illustrations, check the following points.

(a) Premature parting
- Check for proper installation.
- Check the timing cover gasket for damage and proper installation.

(b) If the belt teeth are cracked or damaged, check to see if either camshaft is locked.

(c) If there is noticeable wear or cracks on the belt face, check to see if there are nicks on the side of the idler pulley lock.

(d) If there is wear or damage on only one side of the belt, check the belt guide and the alignment of each pulley.

(e) If there is noticeable wear on the belt teeth, check timing cover for damage and check gasket has been installed correctly and for foreign material on the pulley teeth.
If necessary, replace the timing belt.

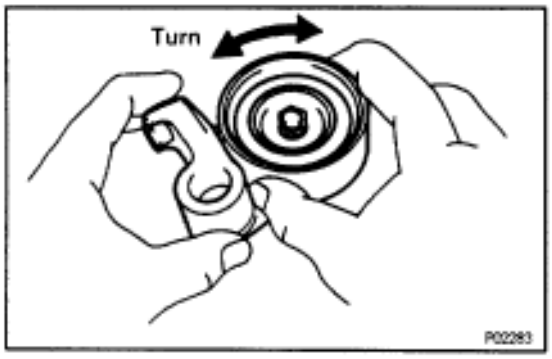

2. INSPECT IDLER PULLEY

Check the turning smoothness of the idler pulley.
If necessary, replace the idler pulley.

3. INSPECT DRIVE BELT TENSIONER

Check the turning smoothness of the tensioner.
If necessary, replace the tensioner.

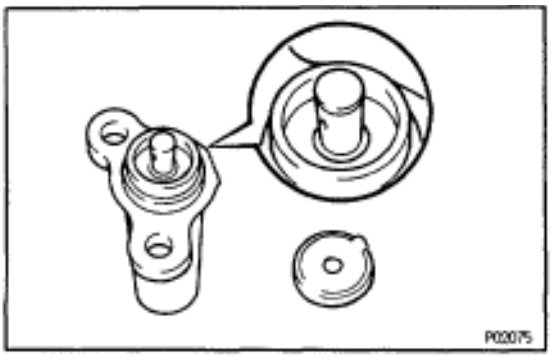

4. INSPECT TIMING BELT TENSIONER

(a) Visually check tensioner for oil leakage.
HINT: If there is only the faintest trace of oil on the seal on the push rod side, the tensioner is all right.
If leakage is found, replace tensioner.

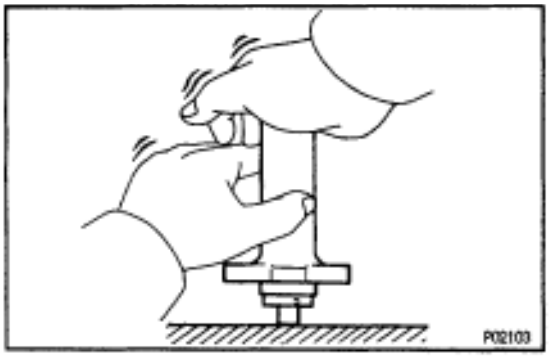

(b) Hold the tensioner with both hands and push the push rod strongly against the floor or wall to check that it doesn't move. If the push rod moves, replace the tensioner.

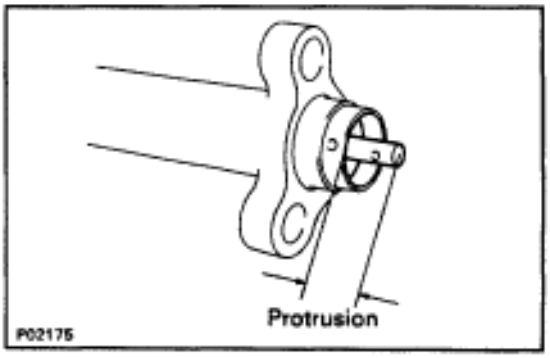

(c) Measure the protrusion of the push rod from the housing end.
Protrusion:

8.0–8.8 mm (0.315–0.346 in.)

If the protrusion is not as specified, replace the tensioner.

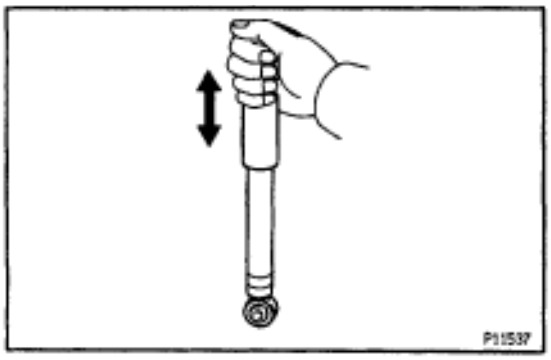

5. 2JZ–GTE M/T:

INSPECT DRIVE BELT TENSION DAMPER

Compress and extend the tension damper rod and check that there is no abnormal resistance or unusual operation sounds.

If there is any abnormality, replace the tension damper with a new one.

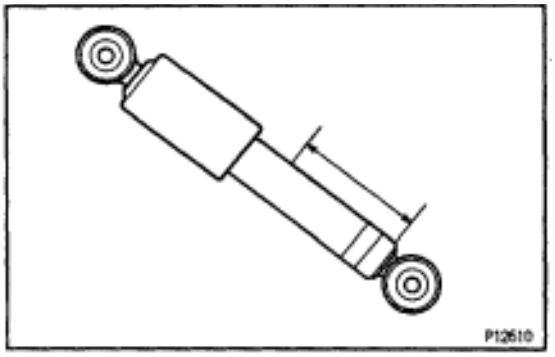

NOTICE: When discarding the tension damper, use the following procedure.

- Fully extend the damper rod.
- Using a drill, make a hole in the cylinder as shown to release the gas inside.

CAUTION: The gas coming out is harmless, but be careful of the chips which may fly up when drilling.

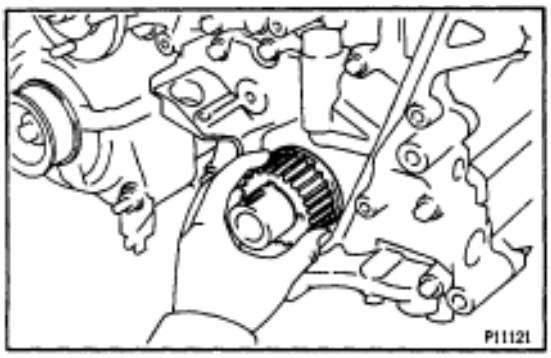

TIMING BELT INSTALLATION

1. INSTALL CRANKSHAFT TIMING PULLEY

(a) Align the pulley set key with the key groove of the pulley.

(b) Slide on the timing pulley facing the flange side inward.

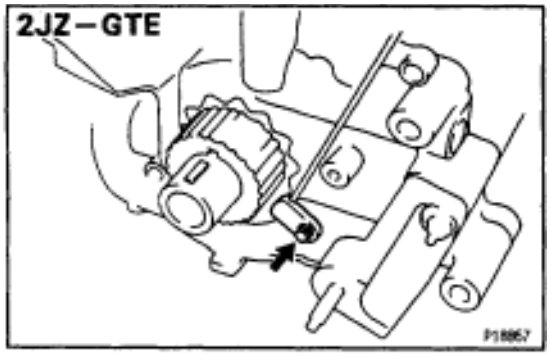

(c) 2JZ–GTE:
Install the timing belt plate with the bolt.
Torque: 7.8 N·m (80 kgf·cm, 69 in.·lbf)

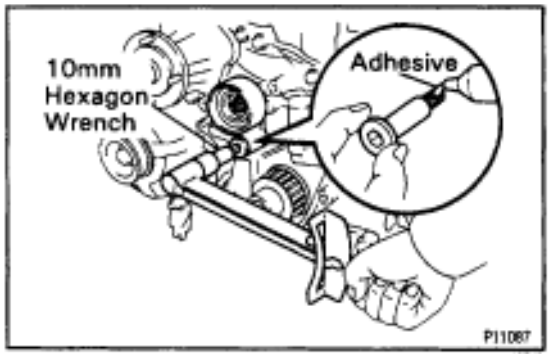

2. INSTALL IDLER PULLEY

(a) Apply adhesive to 2 or 3 threads of the pivot bolt.
Adhesive:
Part No. 08833–00080, THREE BOND 1344, LOCTITE 242 or equivalent

(b) Using a 10 mm hexagon wrench, install the plate washer and pulley with the pivot bolt.
Torque: 34 N·m (350 kgf·cm, 25 ft·lbf)

(c) Check that the pulley bracket moves smoothly.

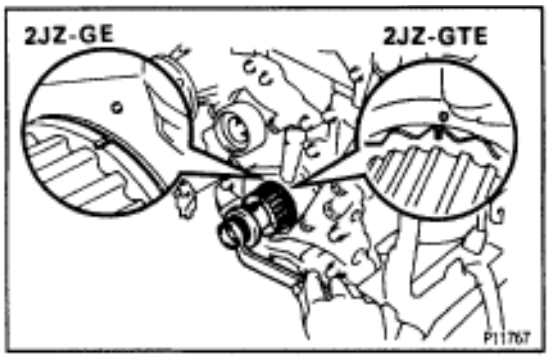

3. TEMPORARILY INSTALL TIMING BELT
NOTICE: The engine should be cold.

(a) Using the crankshaft pulley bolt, turn the crankshaft, and align the timing marks on the crankshaft timing pulley and on the oil pump body.

(b) Remove any oil or water on the crankshaft timing pulley and idler pulley, and keep them clean.

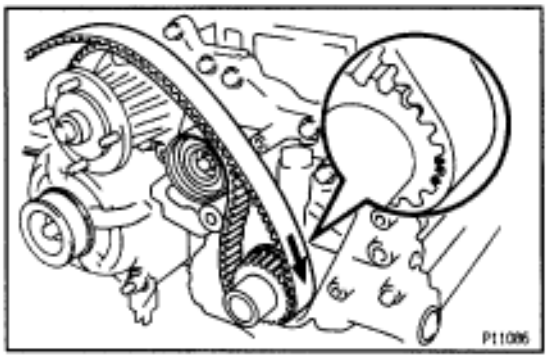

(c) Install the timing belt on the crankshaft timing pulley and idler pulley.
HINT (When re–using timing belt): Align the match marks of the crankshaft timing pulley and timing belt, and install the belt with the arrow pointing in the direction of engine revolution.

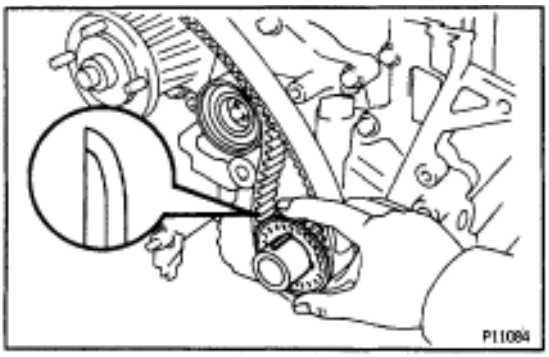

4. INSTALL TIMING BELT GUIDE
Install the guide, facing the cup side outward.

5. INSTALL NO.1 TIMING BELT COVER

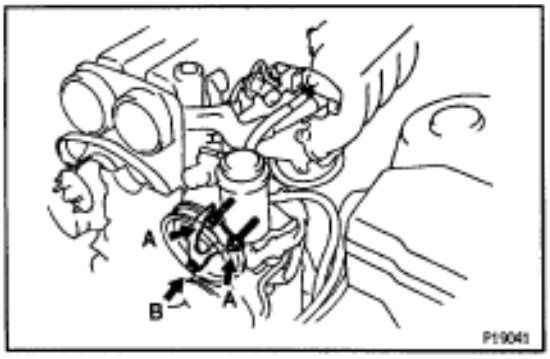

6. 2JZ–GE:
INSTALL PS PUMP FRONT BRACKET

(a) Install the pump front bracket with the 2 bolts (A).
Torque: 58 N·m (590 kgf·cm, 43 ft·lbf)

(b) Install the plate washer and bolt (b) to the oil pump.
Torque: 52 N·m (530 kgf·cm, 38 ft·lbf)

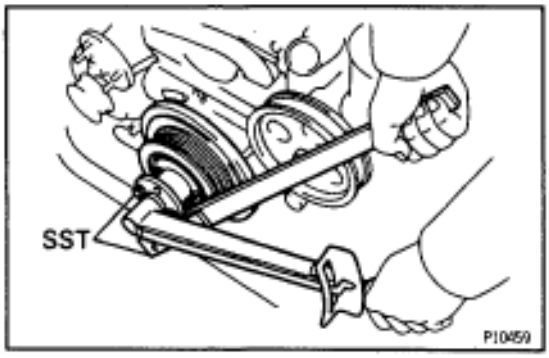

7. INSTALL CRANKSHAFT PULLEY

(a) Align the pulley set key with the key groove of the pulley, and slide on the pulley.

(b) Using SST, install the bolt.
SST 09213–70010, 09330–00021
Torque: 324 N·m (3,300 kgf·cm, 239 ft·lbf)

8. A/T:
CONNECT OIL COOLER TUBES

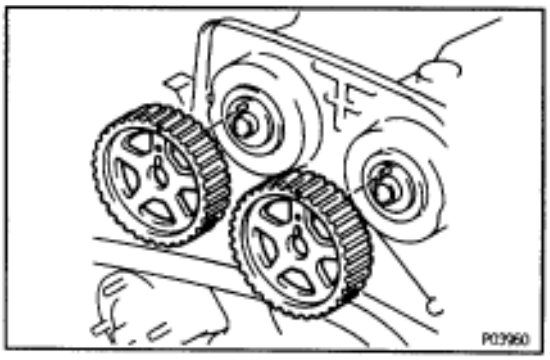

9. INSTALL CAMSHAFT TIMING PULLEYS

(a) Align the camshaft knock pin with the groove of the pulley, and slide on the timing pulley.

(b) Temporarily install the timing pulley bolt.

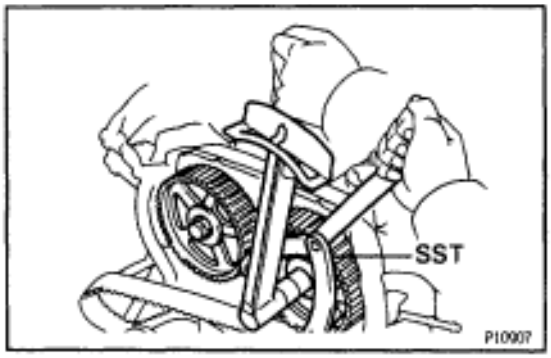

(c) Using SST, tighten the pulley bolt.
SST 09960–10010 (09962–01000, 09963–01000)
Torque: 79 N·m (810 kgf·cm, 59 ft·lbf)



10. SET NO.1 CYLINDER TO TDC/COMPRESSION

(a) Turn the crankshaft pulley, and align its groove with timing mark ”O” of the No.1 timing belt cover.
NOTICE: Always turn the crankshaft clockwise.

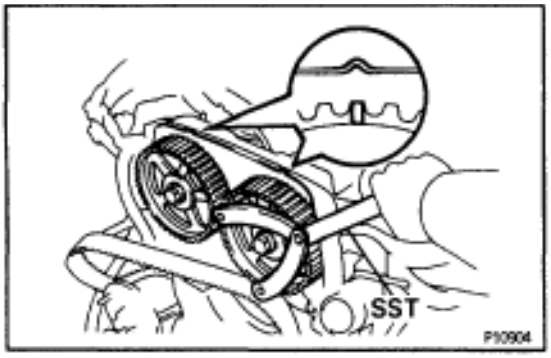

(b) Using SST, align the timing marks of the camshaft timing pulleys and No.4 timing belt cover.
SST 09960–10010 (09962–01000, 09963–01000)

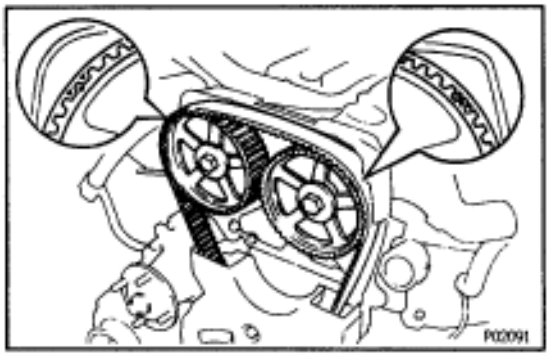

11. INSTALL TIMING BELT

HINT (When re–using timing belt): Align the matchmarks of the timing belt and camshaft timing pulleys.

(a) Remove any oil or water on the camshaft timing pulley, and keep it clean.

(b) Install the timing belt, checking the tension between the crankshaft timing pulley and exhaust camshaft timing pulley.

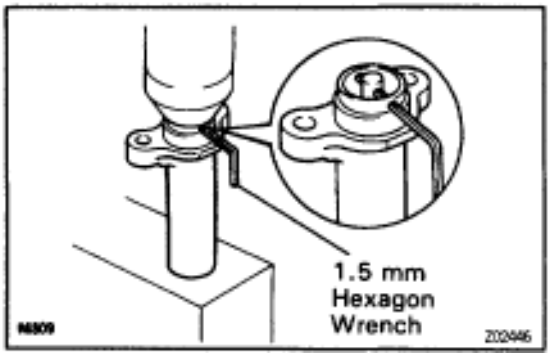

12. SET TIMING BELT TENSIONER

(a) Using a press, slowly press in the push rod using 981 –9,807 N (100–1,000 kgf, 220–2,205 lbf) of force.

(b) Align the holes of the push rod and housing, pass a 1.5 mm hexagon wrench through the holes to keep the push rod retracted.

(c) Release the press.

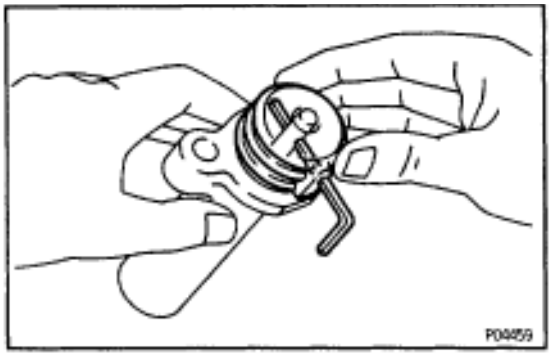

(d) Install the dust boot onto the tensioner.

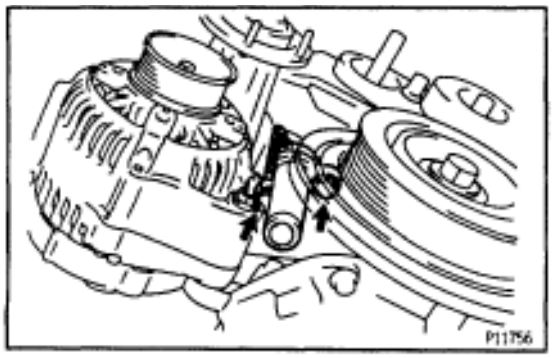

13. INSTALL TIMING BELT TENSIONER

(a) Temporarily install the tensioner with the 2 bolts.

(b) Alternately tighten the 2 bolts.
Torque: 26 N·m (270 kgf·cm, 20 ft·lbf)

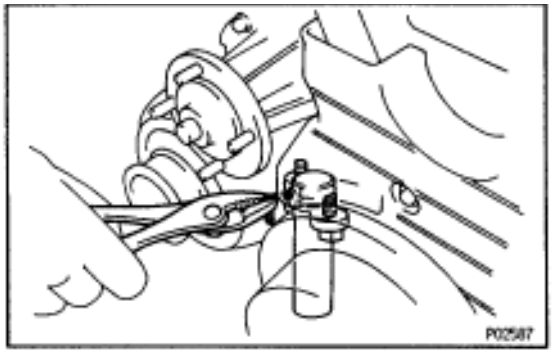

(c) Remove the 1.5 mm hexagon wrench from the tensioner.

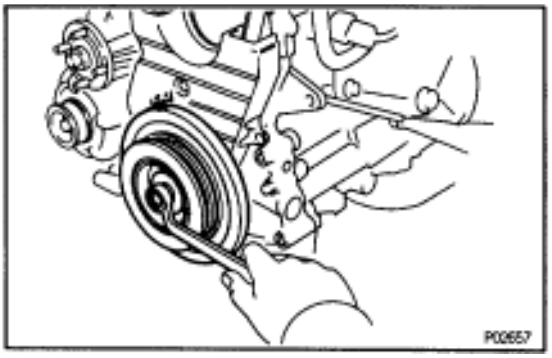

14. CHECK VALVE TIMING

(a) Slowly turn the crankshaft pulley 2 revolutions from TDC to TDC.

NOTICE: Always turn the crankshaft clockwise.

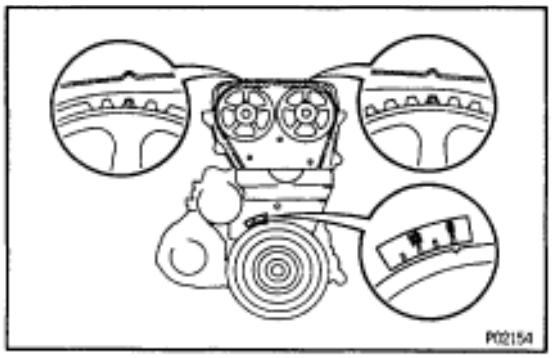

(b) Check that each pulley aligns with the timing marks as shown in the illustration.

If the marks do not align, remove the timing belt and reinstall it.

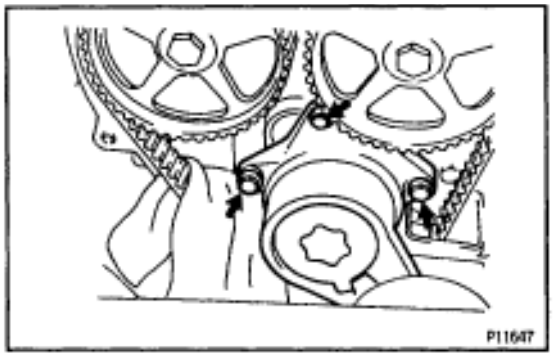

15. INSTALL DRIVE BELT TENSIONER

Install the tensioner with the 3 bolts.

Torque: 21 N·m (210 kgf·cm, 15 ft·lbf)

NOTICE: Be careful not to drop the bolts inside the timing belt cover.

16. INSTALL NO.2 TIMING BELT COVER

17. INSTALL NO.3 TIMING BELT COVER

18. INSTALL WATER PUMP PULLEY, FAN, FLUID COUPLING ASSEMBLY AND DRIVE BELT

(See step 10 in water pump installation in Cooling System)

19. 2JZ–GTE M/T:

INSTALL DRIVE BELT TENSIONER DAMPER

Torque: 20 N·m (200 kgf·cm, 14 ft·lbf)

20. INSTALL RADIATOR ASSEMBLY

(See radiator installation in Cooling System)

21. ROAD TEST VEHICLE

Check for abnormal noise, shock, slippage, correct shift points and smooth operation.

CYLINDER HEAD
COMPONENTS FOR REMOVAL AND INSTALLATION

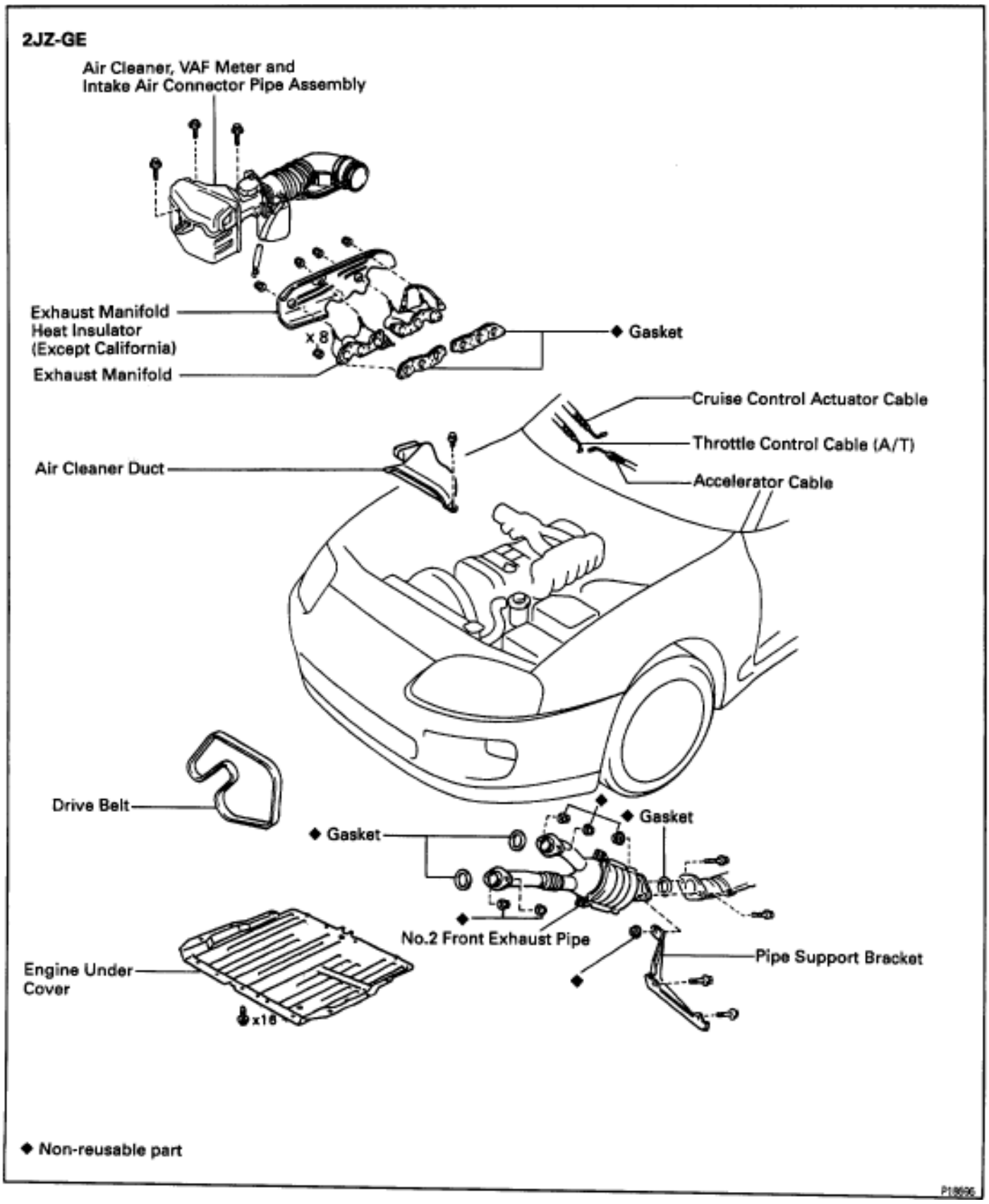

2JZ-GE

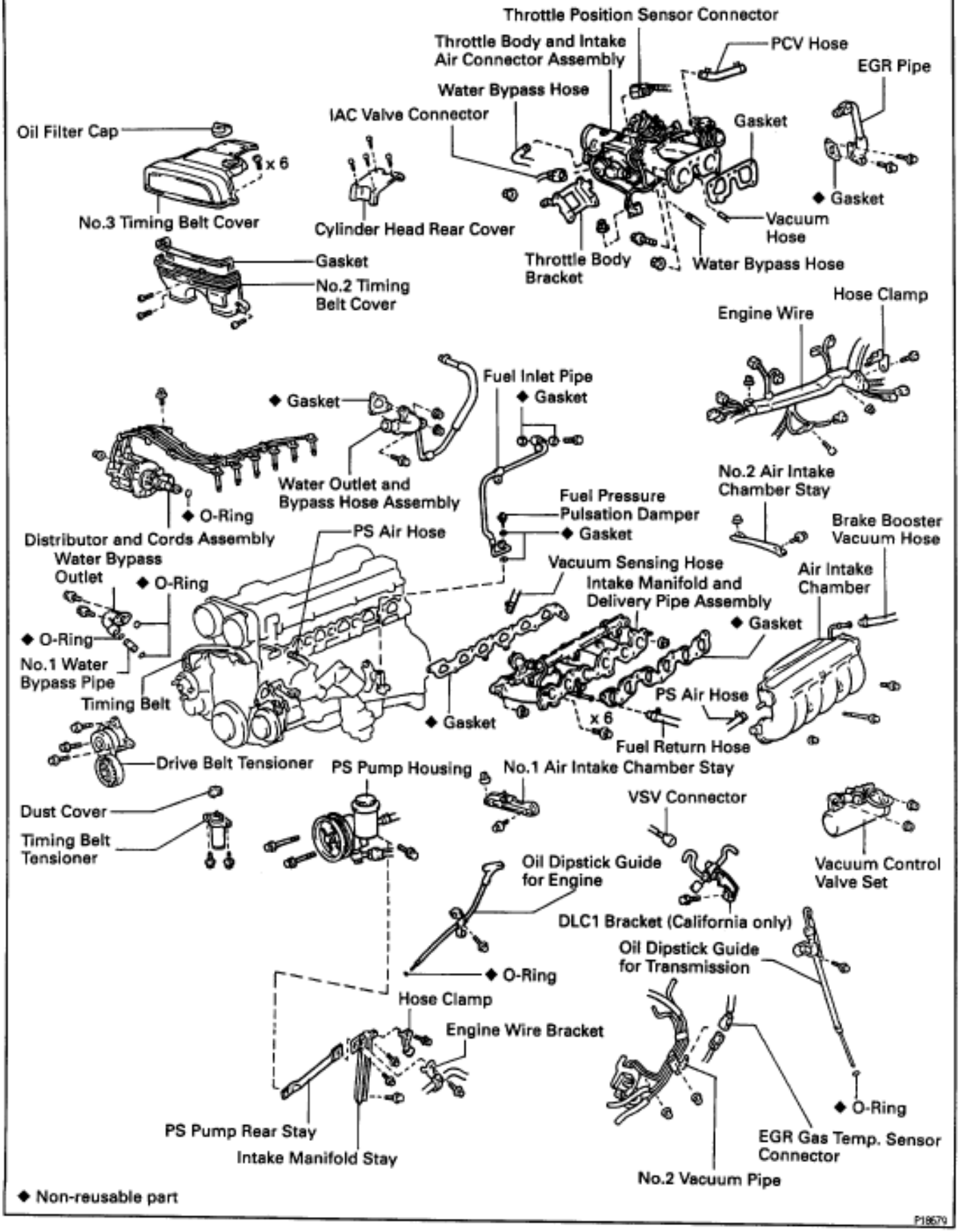
Throttle Position Sensor Connector
Throttle Body and Intake Air Connector Assembly
PCV Hose
EGR Pipe
Water Bypass Hose
IAC Valve Connector
Gasket
Oil Filter Cap
x 6
◆ Gasket
No.3 Timing Belt Cover
Cylinder Head Rear Cover
Vacuum Hose
Gasket
Throttle Body Bracket
Water Bypass Hose
No.2 Timing Belt Cover
Hose Clamp
Engine Wire
Fuel Inlet Pipe
◆ Gasket
◆ Gasket
No.2 Air Intake Chamber Stay
Water Outlet and Bypass Hose Assembly
◆ O-Ring
Distributor and Cords Assembly
Fuel Pressure Pulsation Damper
◆ Gasket
Brake Booster Vacuum Hose
PS Air Hose
Water Bypass Outlet
◆ O-Ring
Vacuum Sensing Hose
Intake Manifold and Delivery Pipe Assembly
Air Intake Chamber
◆ Gasket
◆ O-Ring
No.1 Water Bypass Pipe
Timing Belt
PS Air Hose
◆ Gasket
x 6
Fuel Return Hose
Drive Belt Tensioner
PS Pump Housing
No.1 Air Intake Chamber Stay
Dust Cover
VSV Connector
Timing Belt Tensioner
Vacuum Control Valve Set
Oil Dipstick Guide for Engine
DLC1 Bracket (California only)
Oil Dipstick Guide for Transmission
◆ O-Ring
Hose Clamp
Engine Wire Bracket
◆ O-Ring
PS Pump Rear Stay
Intake Manifold Stay
EGR Gas Temp. Sensor Connector
No.2 Vacuum Pipe
◆ Non-reusable part
P18670

2JZ-GE

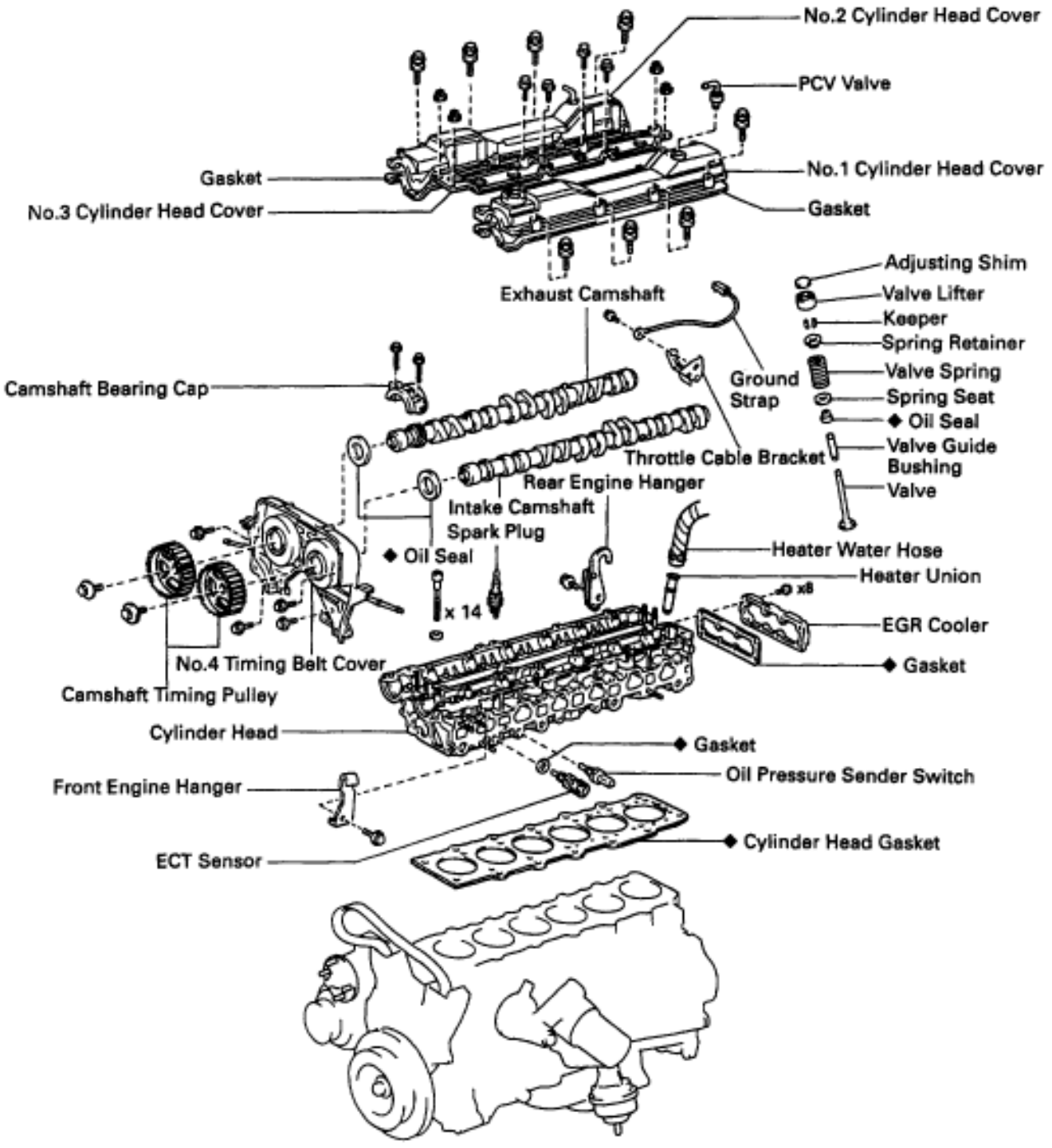

◆ Non-reusable part

P10680

2JZ - GTE

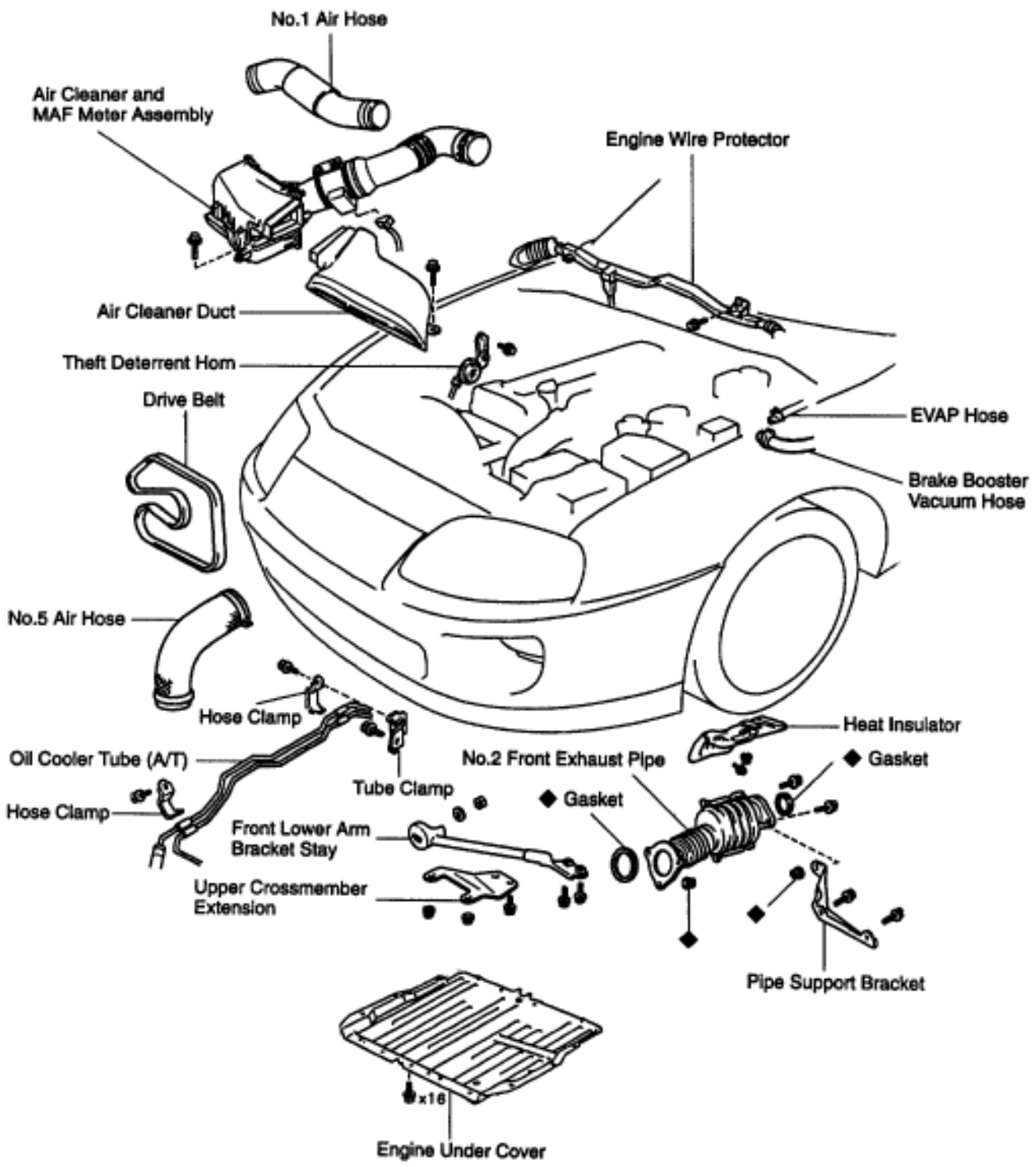

◆ Non-reusable part

P12614

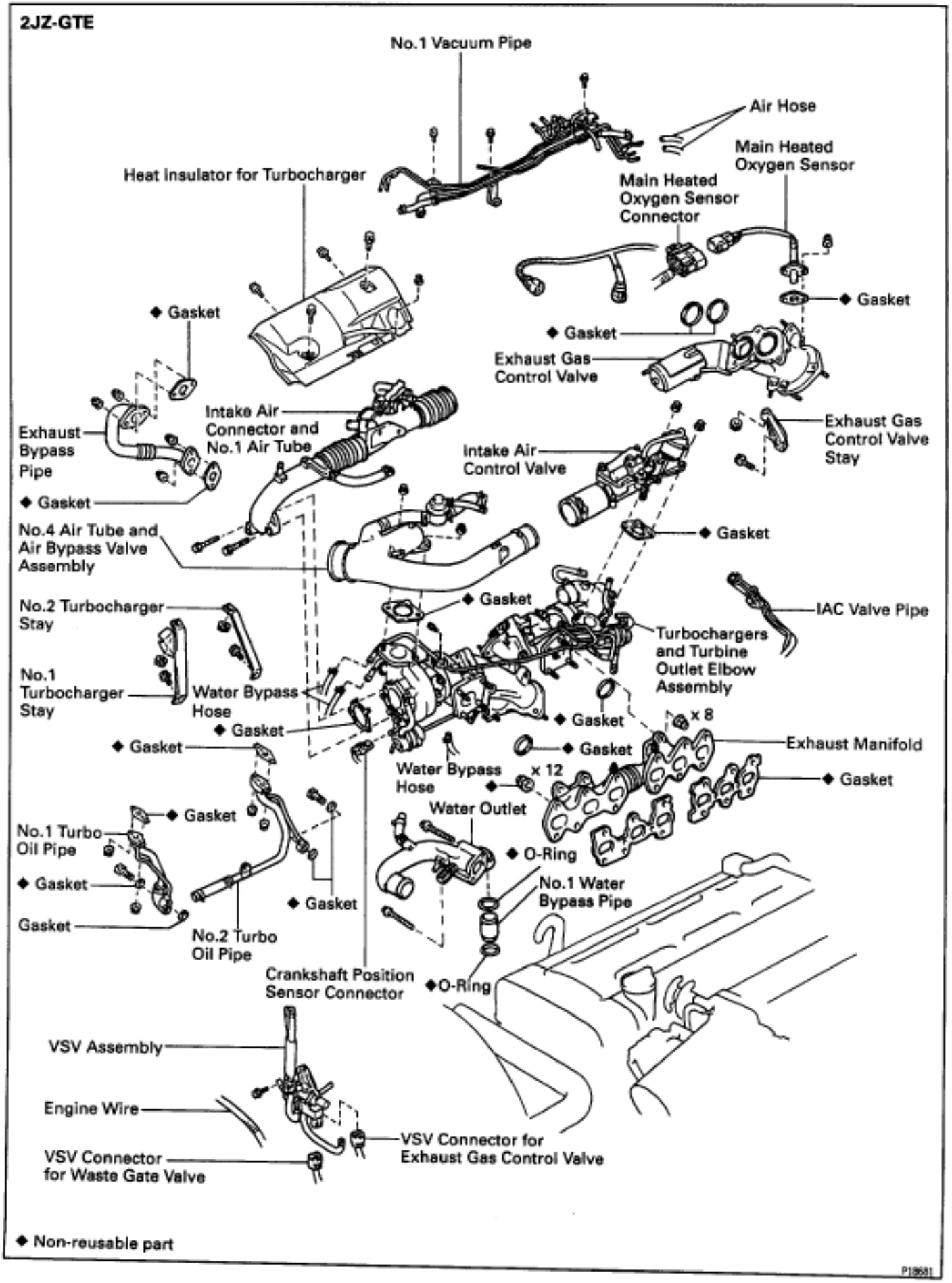
2JZ-GTE
No.1 Vacuum Pipe
Air Hose
Main Heated Oxygen Sensor
Heat Insulator for Turbocharger
Main Heated Oxygen Sensor Connector
◆ Gasket
◆ Gasket
◆ Gasket
Exhaust Gas Control Valve
Intake Air Connector and No.1 Air Tube
Exhaust Bypass Pipe
Intake Air Control Valve
Exhaust Gas Control Valve Stay
◆ Gasket
◆ Gasket
No.4 Air Tube and Air Bypass Valve Assembly
◆ Gasket
IAC Valve Pipe
No.2 Turbocharger Stay
Turbochargers and Turbine Outlet Elbow Assembly
No.1 Turbocharger Stay
Water Bypass Hose
◆ Gasket
◆ Gasket
◆ Gasket
× 8
Exhaust Manifold
◆ Gasket
Water Bypass Hose
× 12
◆ Gasket
Water Outlet
◆ Gasket
No.1 Turbo Oil Pipe
◆ O-Ring
◆ Gasket
No.1 Water Bypass Pipe
◆ Gasket
Gasket
No.2 Turbo Oil Pipe
Crankshaft Position Sensor Connector
◆ O-Ring
VSV Assembly
Engine Wire
VSV Connector for Exhaust Gas Control Valve
VSV Connector for Waste Gate Valve
◆ Non-reusable part
P18681

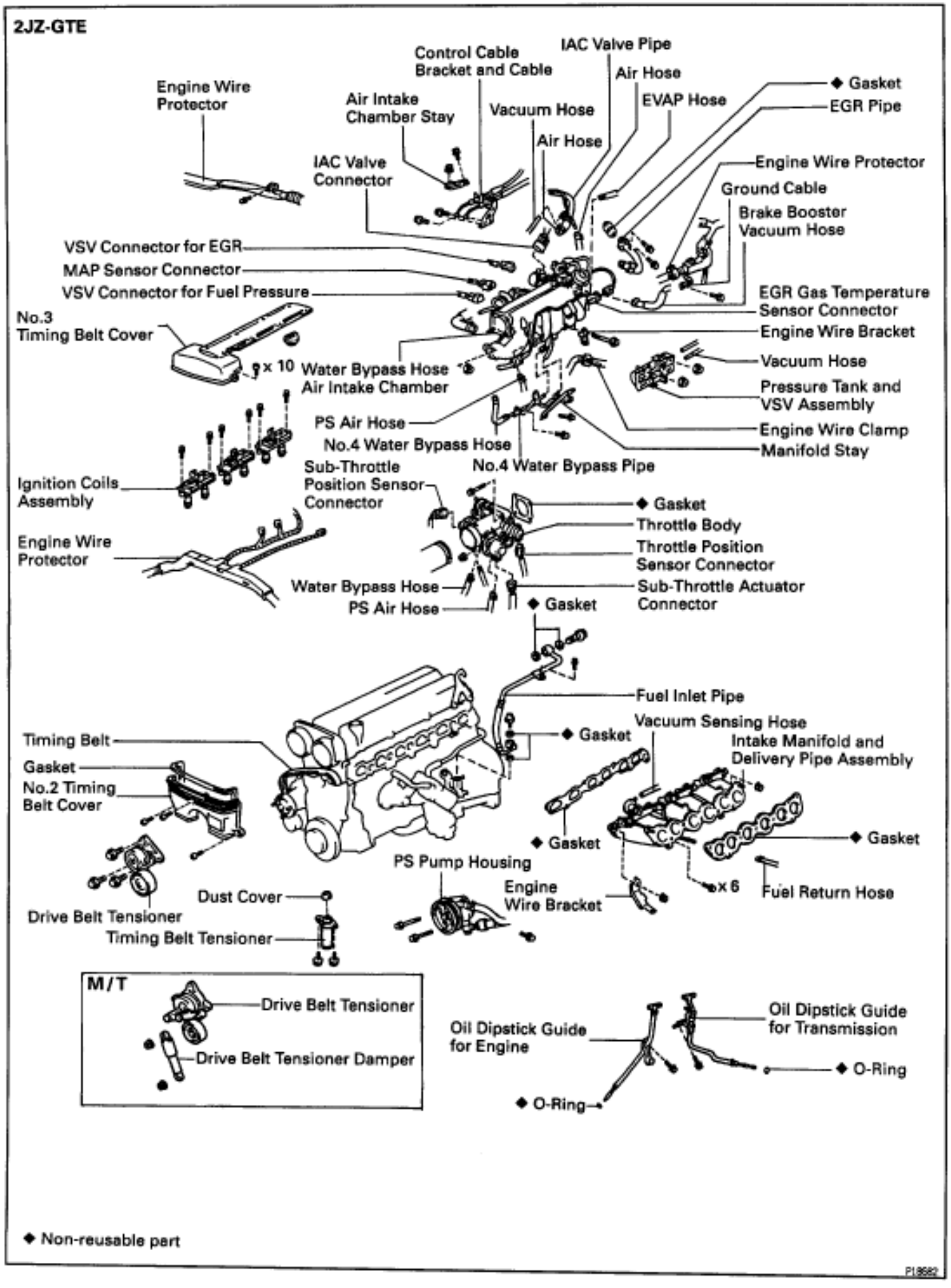
2JZ-GTE
Engine Wire Protector
Control Cable Bracket and Cable
IAC Valve Pipe
Air Hose
Air Intake Chamber Stay
Vacuum Hose
EVAP Hose
◆ Gasket
EGR Pipe
Air Hose
IAC Valve Connector
Engine Wire Protector
Ground Cable
Brake Booster Vacuum Hose
VSV Connector for EGR
MAP Sensor Connector
VSV Connector for Fuel Pressure
EGR Gas Temperature Sensor Connector
Engine Wire Bracket
No.3 Timing Belt Cover
9 x 10
Water Bypass Hose
Air Intake Chamber
Vacuum Hose
Pressure Tank and VSV Assembly
PS Air Hose
No.4 Water Bypass Hose
Engine Wire Clamp
Manifold Stay
No.4 Water Bypass Pipe
Sub-Throttle Position Sensor Connector
Ignition Coils Assembly
◆ Gasket
Throttle Body
Throttle Position Sensor Connector
Engine Wire Protector
Water Bypass Hose
PS Air Hose
Sub-Throttle Actuator Connector
◆ Gasket
Fuel Inlet Pipe
Vacuum Sensing Hose
Timing Belt
◆ Gasket
Intake Manifold and Delivery Pipe Assembly
Gasket
No.2 Timing Belt Cover
◆ Gasket
◆ Gasket
PS Pump Housing
x 6
Engine Wire Bracket
Fuel Return Hose
Dust Cover
Drive Belt Tensioner
Timing Belt Tensioner
M/T
Drive Belt Tensioner
Drive Belt Tensioner Damper
Oil Dipstick Guide for Transmission
Oil Dipstick Guide for Engine
◆ O-Ring
◆ O-Ring
◆ Non-reusable part
P18682

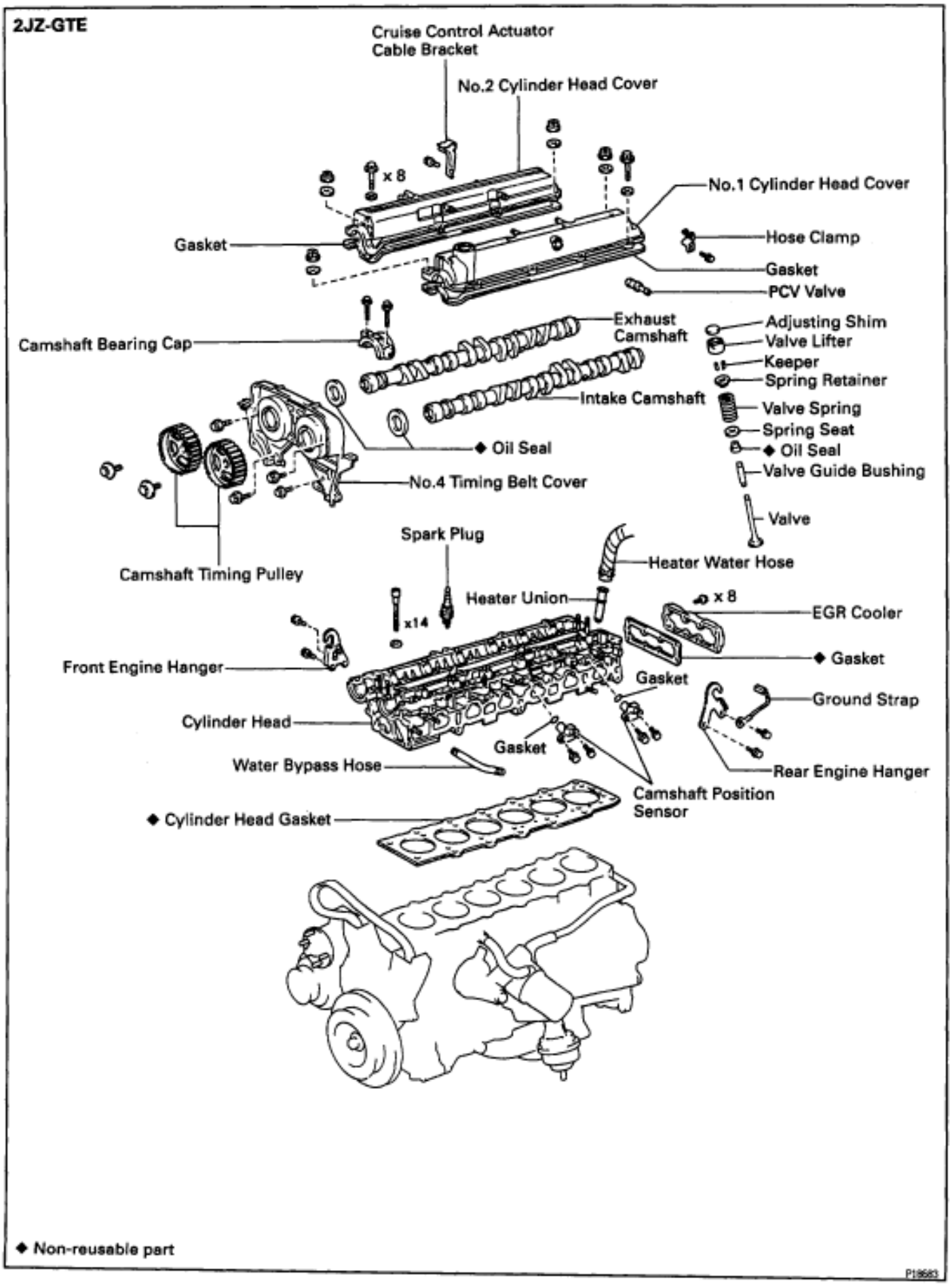
2JZ-GTE
Cruise Control Actuator Cable Bracket
No.2 Cylinder Head Cover
x 8
No.1 Cylinder Head Cover
Gasket
Hose Clamp
Gasket
PCV Valve
Camshaft Bearing Cap
Exhaust Camshaft
Intake Camshaft
Adjusting Shim
Valve Lifter
Keeper
Spring Retainer
Valve Spring
Spring Seat
◆ Oil Seal
Valve Guide Bushing
Valve
◆ Oil Seal
No.4 Timing Belt Cover
Camshaft Timing Pulley
Spark Plug
x14
Heater Water Hose
Heater Union
x 8
EGR Cooler
◆ Gasket
Front Engine Hanger
Gasket
Ground Strap
Cylinder Head
Gasket
Water Bypass Hose
Rear Engine Hanger
Camshaft Position Sensor
◆ Cylinder Head Gasket
◆ Non-reusable part
P19683

CYLINDER HEAD REMOVAL (2JZ–GE)

1. REMOVE ENGINE UNDER COVER

2. DRAIN ENGINE COOLANT

3. REMOVE AIR CLEANER DUCT

4. REMOVE AIR CLEANER, VAF METER AND INTAKE AIR CONNECTOR PIPE ASSEMBLY
(See step 6 in engine removal in Engine Mechanical)

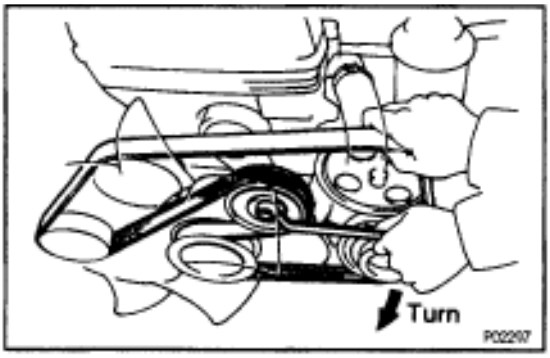

5. REMOVE DRIVE BELT
Loosen the drive belt tension by turning the drive belt tensioner clockwise, and remove the drive belt.

6. REMOVE NO.2 FRONT EXHAUST PIPE
(See step 22 in engine removal in Engine Mechanical)



7. REMOVE EXHAUST MANIFOLDS

(a) Except California:
Remove the 4 nuts and manifold heat insulator.

(b) Disconnect the 2 (main heated) oxygen sensor connectors.

(c) Remove the 4 nuts, exhaust manifold and gasket.
Remove the No.1 and No.2 exhaust manifolds.

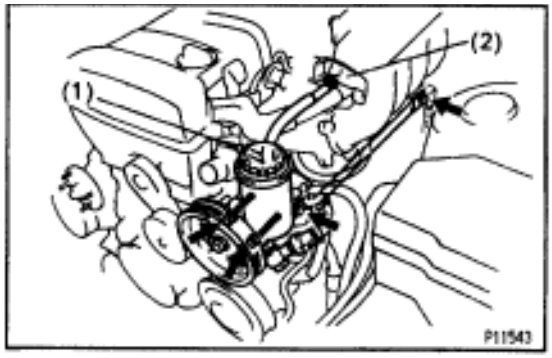

8. DISCONNECT PS PUMP WITHOUT DISCONNECTING HOSES

(a) Disconnect these hoses:
(1) Air hose from No.4 timing belt cover
(2) Air hose from air intake chamber

(b) Remove the 2 bolts, and disconnect the pump housing from the pump bracket.
HINT: Put aside the pump housing, and suspend it.

(c) Remove the 2 bolts and pump rear stay.

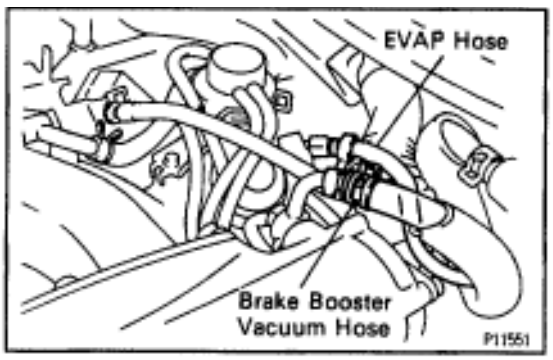

9. DISCONNECT BRAKE BOOSTER VACUUM HOSE

10. DISCONNECT EVAP HOSE

11. REMOVE THROTTLE BODY AND INTAKE AIR CONNECTOR ASSEMBLY
(See injector removal in SFI System)

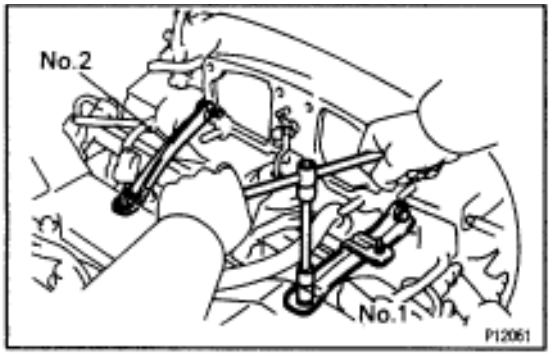

12. REMOVE AIR INTAKE CHAMBER STAYS

(a) Remove the bolt, nut and No.1 stay.

(b) Remove the bolt, nut and No.2 stay.

13. REMOVE NO.2 VACUUM PIPE AND VSV ASSEMBLY

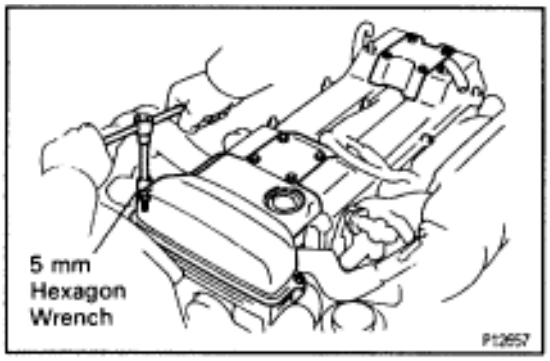

14. REMOVE NO.3 TIMING BELT COVER

(a) Remove the oil filler cap.

(b) Using a 5 mm hexagon wrench, remove the 6 bolts and timing belt cover.

15. REMOVE CYLINDER HEAD REAR COVER

Using a 5 mm hexagon wrench, remove the 4 bolts and cylinder head rear cover.

16. DISCONNECT HIGH–TENSION CORDS FROM CYLINDER HEAD COVERS

(See step 4 in high–tension cords and cord clamps removal in Ignition System)

17. REMOVE DISTRIBUTOR AND CORDS ASSEMBLY

(See steps 1 to 3 in distributor removal in Ignition System)

18. REMOVE SPARK PLUGS

19. REMOVE TIMING BELT FROM CAMSHAFT TIMING PULLEYS

(See steps 5 to 8 in timing belt removal)

NOTICE:

- **Support the timing belt, so that the meshing of the crankshaft timing pulley and timing belt does not shift.**
- **Be careful not to drop anything inside the timing belt cover.**
- **Do not allow the timing belt to come into contact with oil, water or dust.**



20. REMOVE WATER BYPASS OUTLET AND NO.1 WATER BYPASS PIPE

(See step 13 in water pump removal in Cooling System)

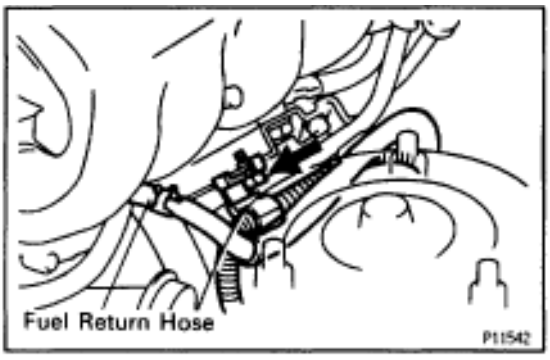

21. DISCONNECT FUEL RETURN HOSE

(a) Disconnect the fuel return hose from the fuel return pipe. Plug the hose end.

(b) Disconnect the fuel return hose from the oil dipstick guide.

22. REMOVE ENGINE WIRE BRACET

Remove the bolt and bracket, disconnect the engine wire the intake manifold stay.

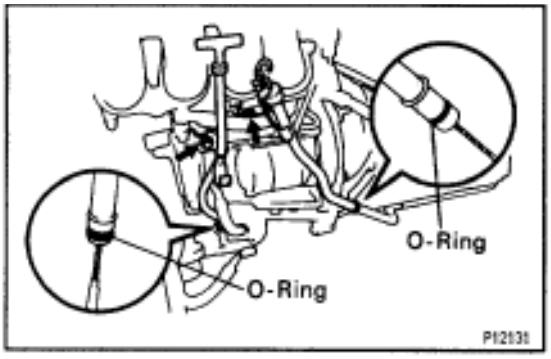

23. REMOVE OIL DIPSTICK GUIDES FOR ENGINE AND TRANSMISSION

(a) Remove the 2 bolts.
(b) Pull out the dipstick guide together with the dipstick.
(c) Remove the O–ring from the dipstick guide.

24. REMOVE STARTER
(See starter removal in Starting System)

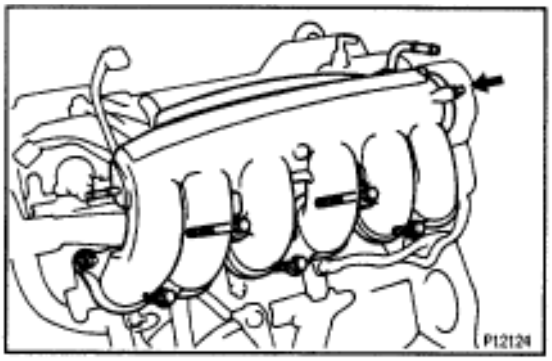

25. REMOVE AIR INTAKE CHAMBER

(a) Except California:
Disconnect the vacuum sensing hose from the fuel pressure regulator.
(b) Remove the bolt holding the engine wire protector to the the air intake chamber.
(c) Remove the 5 bolts, nut, air intake chamber and gasket.

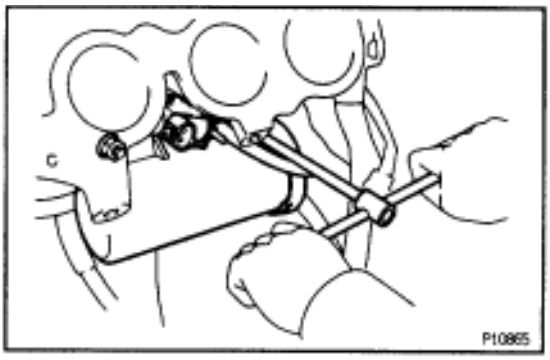

26. REMOVE VACUUM CONTROL VALVE SET

(a) Disconnect the VSV connector.
(b) Remove the 2 nuts and vacuum control valve set.

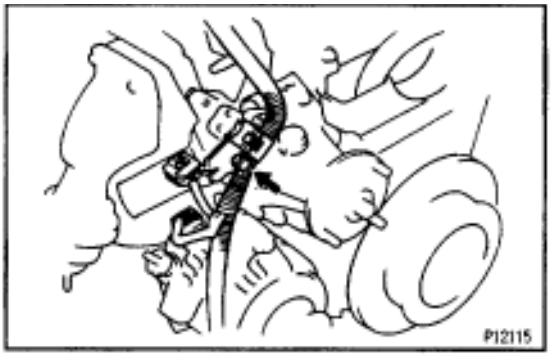

27. DISCONNECT ENGINE WIRE

(a) Remove the bolt, and disconnect the engine wire bracket from the water pump.

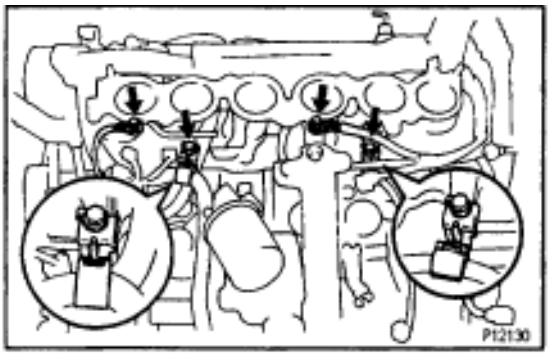

(b) Remove the 2 bolts, and disconnect the 2 ground straps from the intake manifold.
(c) Remove the 2 bolts, and disconnect the 2 wire clamps from the intake manifold.
(d) Disconnect these connectors:
- 6 injector connectors
- ECT sensor connector
- ECT sender gauge connector

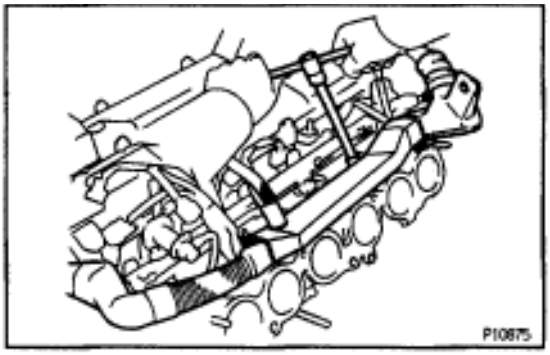

(e) Remove the 3 nuts, and disconnect the engine wire protector from the intake manifold.

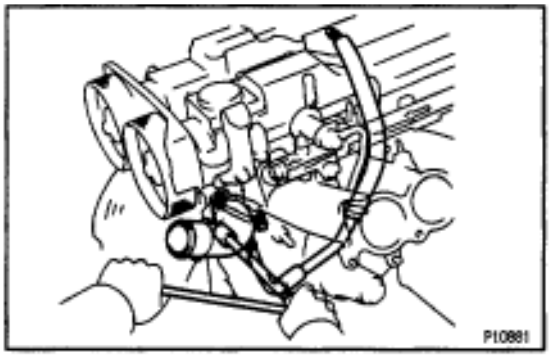

28. REMOVE WATER OUTLET AND NO.1 BYPASS HOSE ASSEMBLY

Remove the 2 nuts, bolt and water outlet.

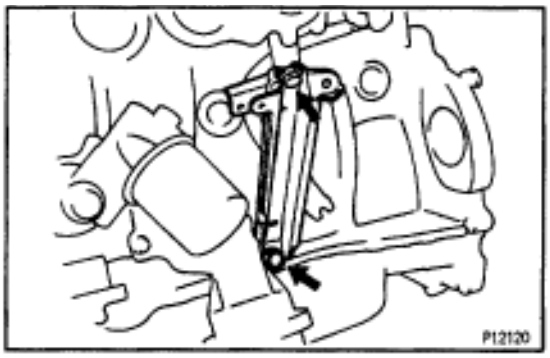

29. REMOVE INTAKE MANIFOLD STAY

Remove the 2 bolts and manifold stay.

30. REMOVE FUEL PRESSURE PULSATION DAMPER (See step 2 in fuel pressure pulsation damper in SFI System)

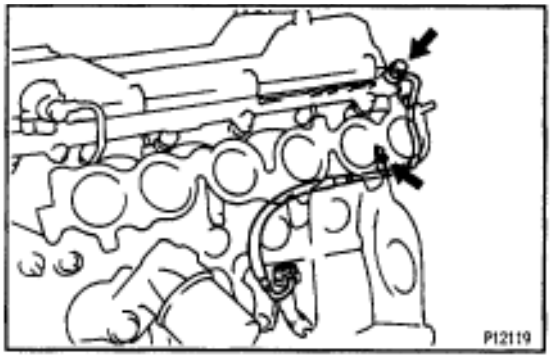

31. REMOVE FUEL INLET PIPE

(a) Remove the clamp bolt from the intake manifold.

(b) Remove the union bolt and 2 gaskets, and disconnect the fuel inlet pipe.

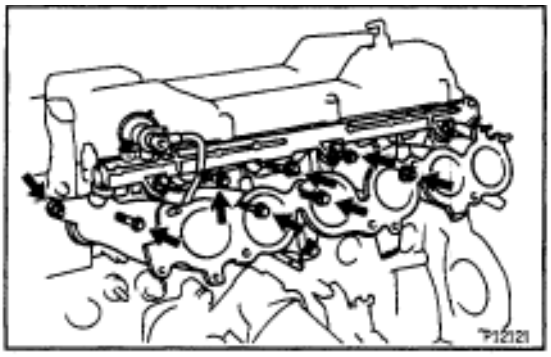

32. REMOVE INTAKE MANIFOLD AND DELIVERY PIPE ASSEMBLY

Remove the 6 bolts, 2 nuts, the intake manifold, delivery pipe assembly and gasket.

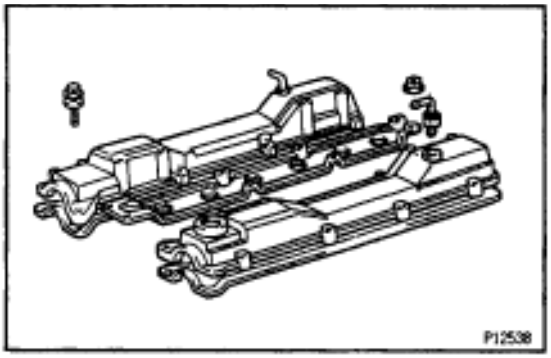

33. REMOVE NO.3, NO.1 AND NO.2 CYLINDER HEAD COVERS

(a) Remove the PCV valve.
(b) Remove the 4 bolts, 4 nuts and No.3 cylinder head cover.
(c) Remove the 4 bolts, No.1 cylinder head cover and gasket.
(d) Remove the 4 bolts, No.2 cylinder head cover and gasket.

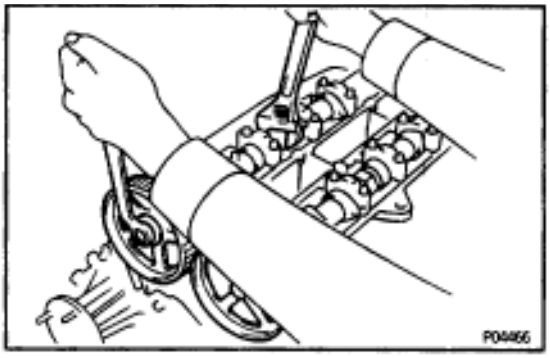

34. REMOVE CAMSHAFT TIMING PULLEYS

Hold the hexagon portion of the camshaft with a wrench, and remove the pulley mounting bolt and camshaft pulley.

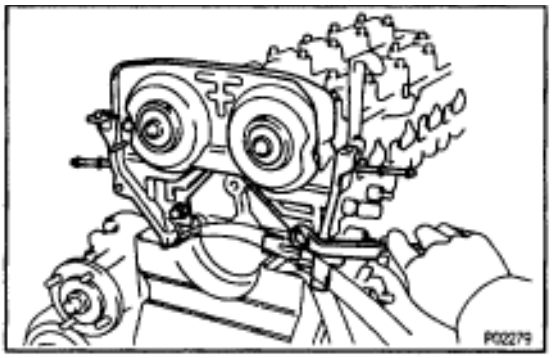

35. REMOVE NO.4 TIMING BELT COVER

Remove the 4 bolts and timing belt cover.

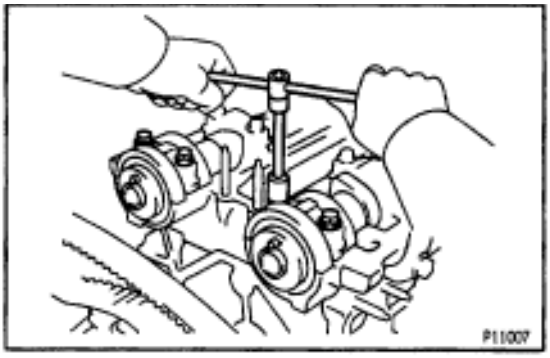

36. REMOVE CAMSHAFTS

(a) Uniformly loosen and remove the 4 No.1 bearing cap bolts.

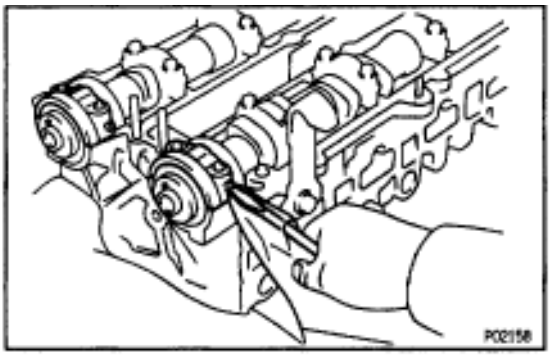

(b) Using a screwdriver, pry out the 2 No.1 camshaft bearing caps and oil seals.

NOTICE: Be careful not to damage the cap. Tape the screwdriver tip.

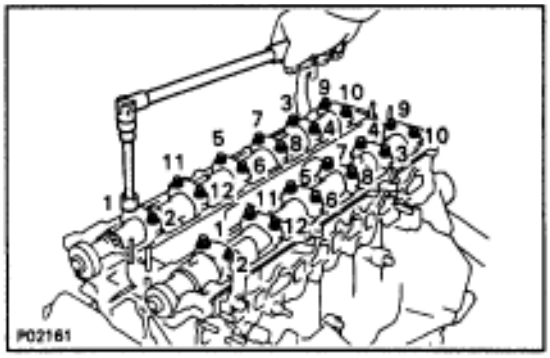

(c) Uniformly loosen and remove the 12 bearing cap bolts, in several passes, in the sequence shown, and remove the 6 bearing caps and camshaft.
(d) Remove the intake and exhaust camshafts.

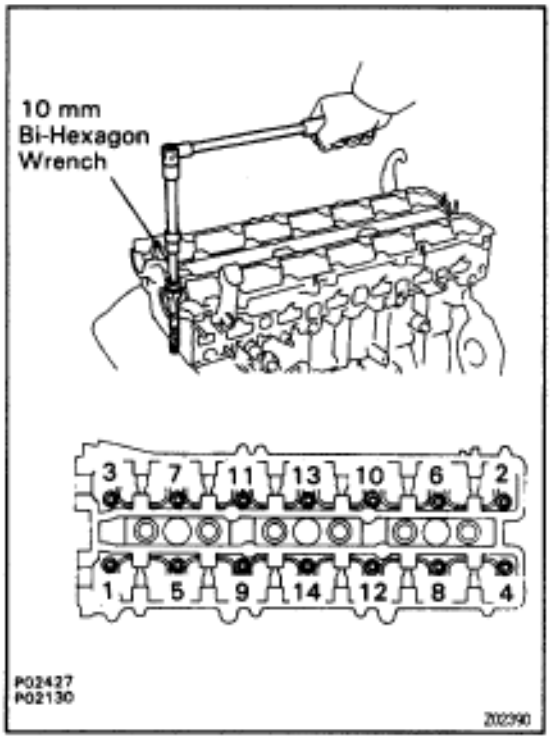

37. REMOVE CYLINDER HEAD

(a) Using a 10 mm bi–hexagon wrench, uniformly loosen and remove the 14 cylinder head bolts, in several passes, in the sequence shown.
NOTICE: Cylinder head warpage or cracking could result from removing in incorrect order.
(b) Remove the 14 plate washers.

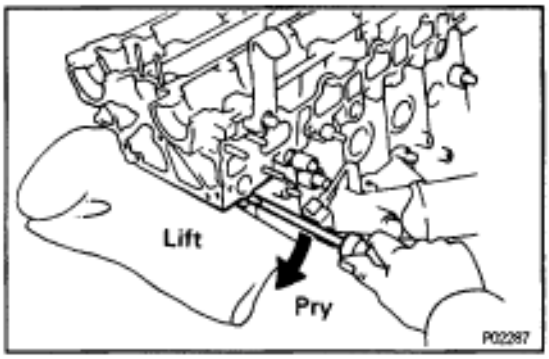

(c) Lift the cylinder head from the dowels on the cylinder block.
(d) Place the head on wooden blocks on a bench.
If the cylinder head is difficult to lift off, pry with a screwdriver between the cylinder head and block projection.
NOTICE: Be careful not to damage the contact surfaces of the cylinder head and cylinder block.

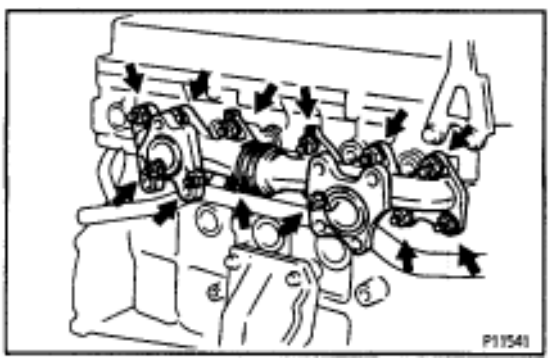

CYLINDER HEAD REMOVAL (2JZ–GTE)

1. REMOVE TURBOCHARGER
(See turbocharger removal in Turbocharger System)
2. REMOVE EXHAUST MANIFOLD
Remove the 12 nuts, exhaust manifold and 2 gaskets.
3. M/T:
REMOVE DRIVE BELT TENSIONER DAMPER
(See step 2 in timing belt removal)

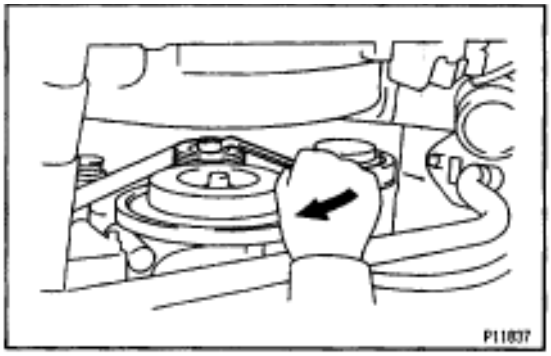

4. REMOVE DRIVE BELT

Loosen the drive belt tension by turning the drive belt tensioner clockwise, and remove the drive belt.

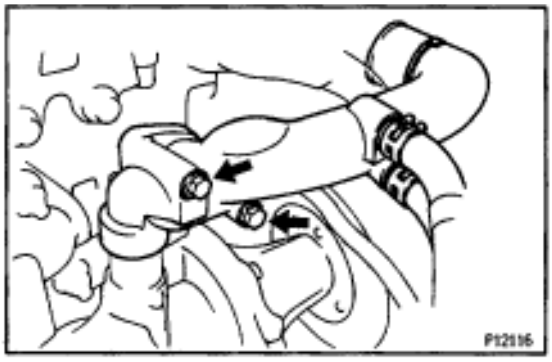

5. REMOVE WATER OUTLET AND NO.1 WATER BYPASS PIPE

(a) Disconnect the upper radiator hose from the water outlet.
(b) Disconnect the ECT sensor and sender gauge connectors.
(c) Remove the 2 bolts, water outlet and gasket.

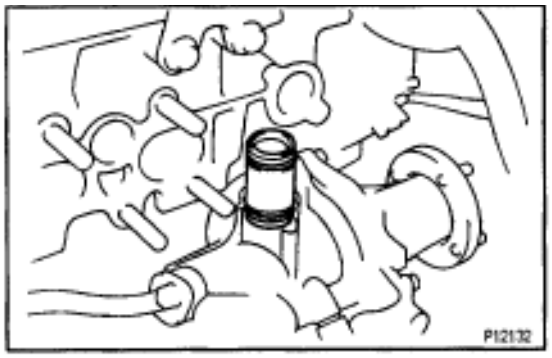

(d) Remove the No.1 water bypass pipe and 2 O–rings.

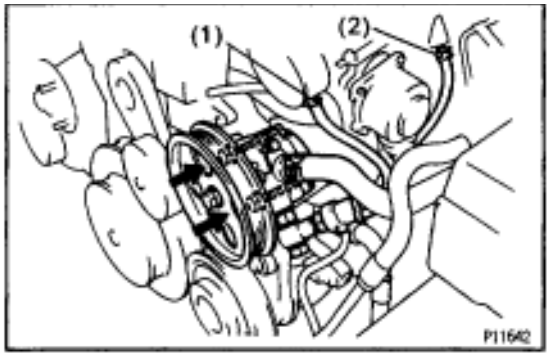

6. DISCONNECT PS PUMP WITHOUT DISCONNECTING HOSES

(a) Disconnect these hoses:
  (1) Air hose from throttle body
  (2) Air hose from air intake chamber
(b) Remove the 2 bolts, and disconnect the pump housing from the pump bracket.
  HINT: Put aside the pump housing, and suspend it securely.

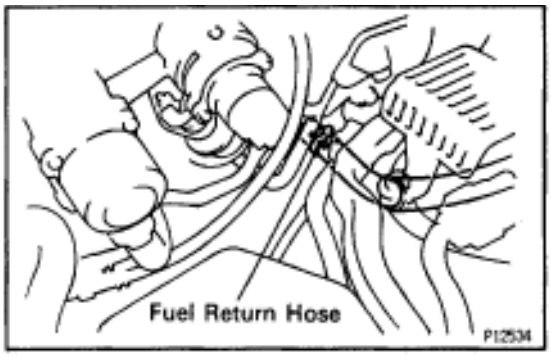

7. DISCONNECT FUEL RETURN HOSE

Disconnect the fuel return hose from the fuel return pipe. Plug the hose end.

8. REMOVE AIR INTAKE CHAMBER ASSEMBLY
(See injector removal in SFI System)

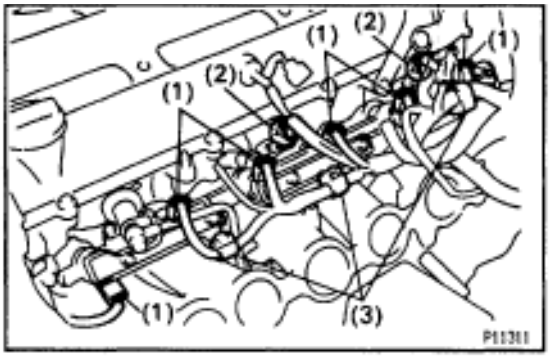

9. DISCONNECT ENGINE WIRE

(a) Disconnect these connectors and clamps:
  (1) 6 injectors connectors
  (2) 2 camshaft position sensor connectors
  (3) 3 engine wire clamps from injector holders

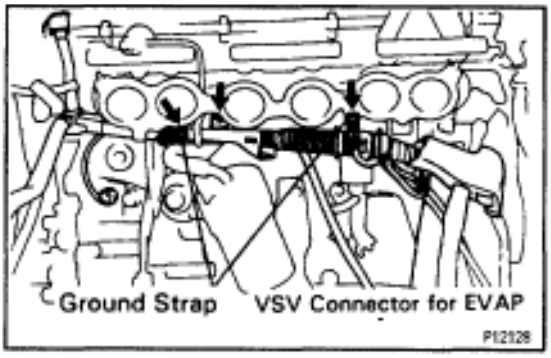

  (4) VSV connector for EVAP

(b) Remove the 2 bolts, and disconnect the 2 ground straps from the intake manifold.

(c) Remove the nut, and disconnect the engine wire protector from the intake manifold.

10. REMOVE STARTER
(See starter removal in Starting System)

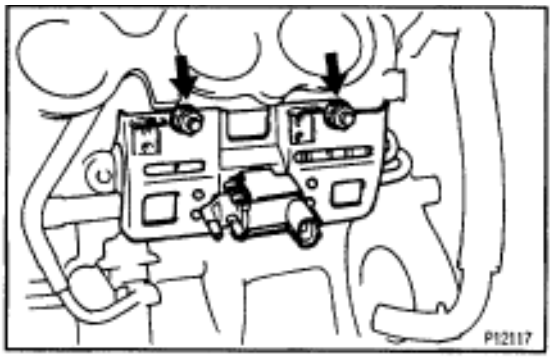

11. REMOVE PRESSURE TANK AND VSV ASSEMBLY

(a) Disconnect the 2 vacuum hoses from the pressure tank.

(b) Remove the 2 nuts and pressure tank and VSV assembly.

12. REMOVE FUEL PRESSURE PULSATION DAMPER
(See step 2 in fuel pressure pulsation damper in SFI System)

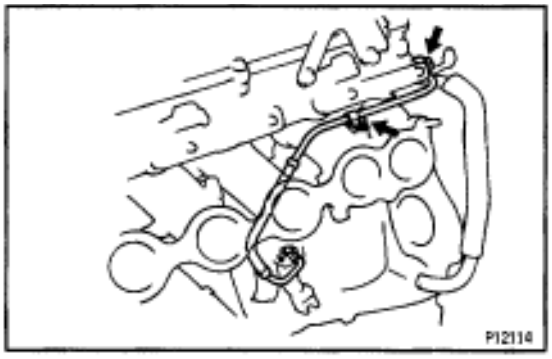

13. REMOVE FUEL INLET PIPE

Remove the union bolt, 2 gaskets, clamp bolt and fuel inlet pipe.

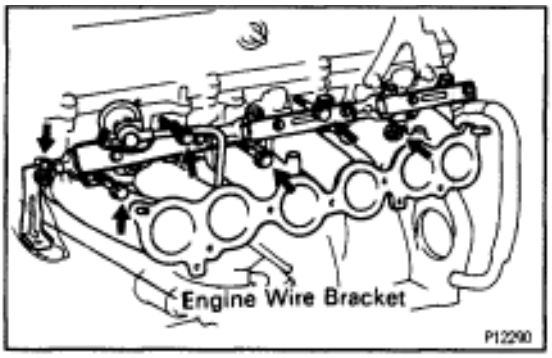

14. REMOVE INTAKE MANIFOLD AND DELIVERY PIPE ASSEMBLY

Remove the 4 bolts, 2 nuts, engine wire bracket, the intake manifold, delivery pipe assembly and gasket.

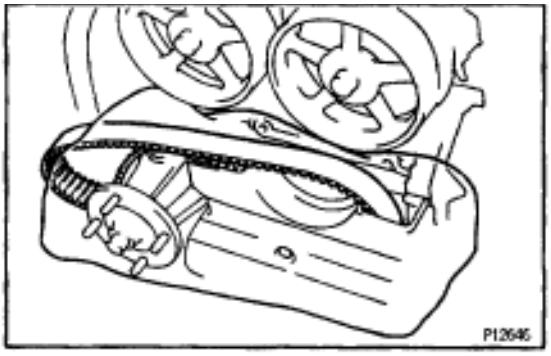

15. REMOVE TIMING BELT FROM CAMSHAFT TIMING PULLEYS
(See steps 5 to 8 in timing belt removal)
NOTICE:
- **Support the timing belt, so that the meshing of the crankshaft timing pulley and timing belt does not shift.**
- **Be careful not to drop anything inside the timing belt cover.**
- **Do not allow the timing belt to come into contact with oil, water or dust.**

16. REMOVE IGNITION COILS ASSEMBLIES
(See steps 2 to 5 in ignition coils removal in Ignition System)

17. REMOVE SPARK PLUGS

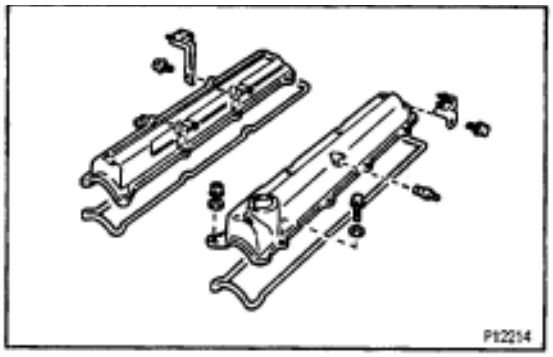

18. REMOVE NO.1 AND NO.2 CYLINDER HEAD COVERS
(a) Remove the 2 bolts, cruise control actuator cable bracket and IAC valve pipe clamp.
(b) Remove the PCV valve.
(c) Remove the 6 bolts, 2 nuts, 8 seal washers and No.1 cylinder head cover and gasket.
(d) Remove the 6 bolts, 2 nuts, 8 seal washers and No.2 cylinder head cover and gasket.

19. REMOVE CAMSHAFT TIMING PULLEYS
(See step 34 cylinder head removal (2JZ–GE))

20. REMOVE NO.4 TIMING BELT COVER
(See step 35 cylinder head removal (2JZ–GE))

21. REMOVE CAMSHAFTS
(See step 36 cylinder head removal (2JZ–GE))

22. REMOVE CYLINDER HEAD
(See step 37 cylinder head removal (2JZ–GE))

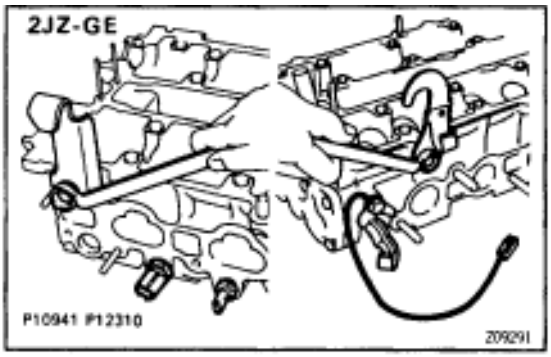

CYLINDER HEAD DISASSEMBLY

1. 2JZ–GE:
REMOVE ENGINE HANGERS

2. 2JZ–GE:
REMOVE ECT SENSOR AND SENDER GAUGE

3. 2JZ–GE:
REMOVE THROTTLE CABLE BRACKET AND GROUND STRAP

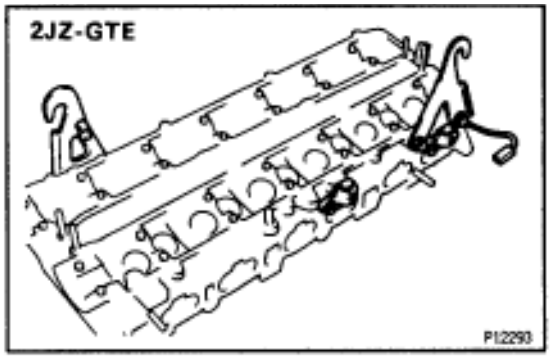

4. 2JZ–GTE:
REMOVE ENGINE HANGERS AND GROUND STRAP

5. 2JZ–GTE:
REMOVE CAMSHAFT POSITION SENSORS

6. REMOVE EGR COOLER

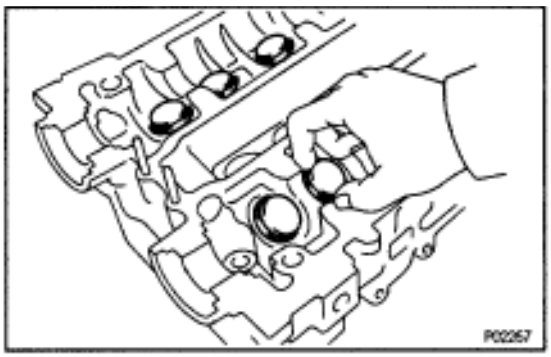

7. REMOVE VALVE LIFTERS AND SHIMS

HINT: Store the valve lifters and shims in correct order.

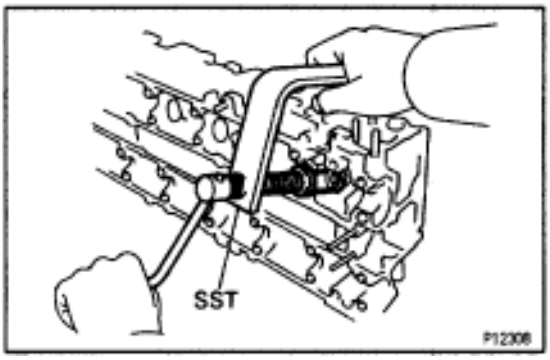

8. REMOVE VALVES

(a) Using SST, compress the valve spring and remove the 2 keepers.
SST 09202–70010

(b) Remove the spring retainer, valve spring, valve and spring seat.
HINT: Store the valves, valve springs, spring seats and spring retainers in correct order.

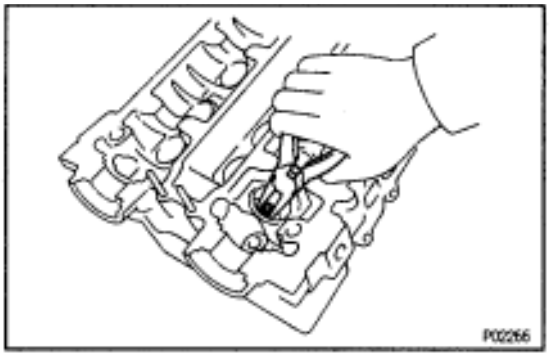

(c) Using needle–nose pliers, remove the oil seal.

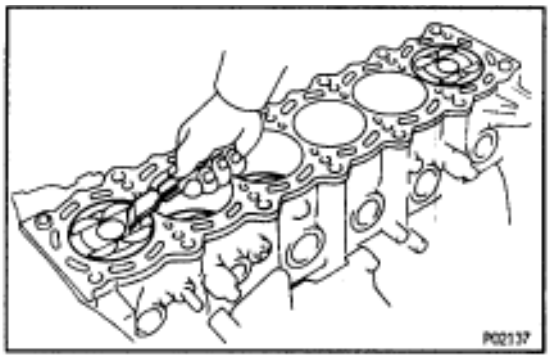

CYLINDER HEAD COMPONENTS INSPECTION AND REPAIR

1. CLEAN TOP SURFACES OF PISTONS AND CYLINDER BLOCK

(a) Turn the crankshaft, and bring each piston to top dead center (TDC). Using a gasket scraper, remove all the carbon from the piston top surface.

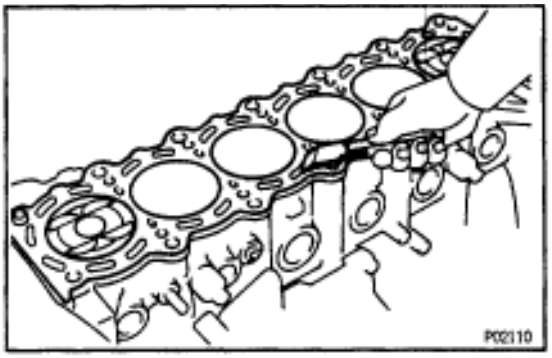

(b) Using a gasket scraper, remove all the gasket material from the top surface of the cylinder block.

(c) Using compressed air, blow carbon and oil from the bolt holes.

CAUTION: Protect your eyes when using high pressure compressed air.

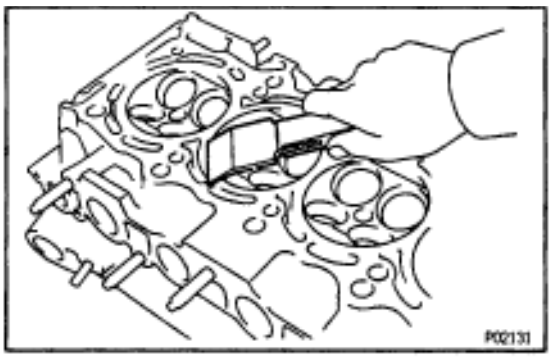

2. CLEAN CYLINDER HEAD

A. Remove gasket material

Using a gasket scraper, remove all the gasket material from the cylinder block surface.

NOTICE: Be careful not to scratch the cylinder block contact surface.

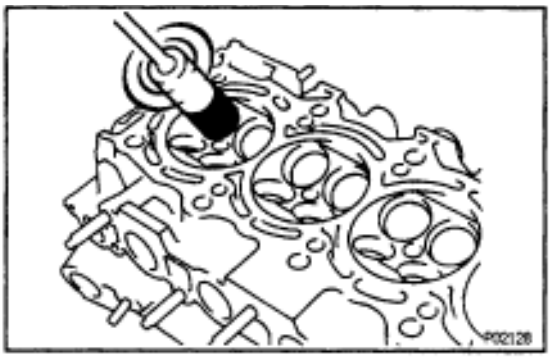

B. Clean combustion chambers

Using a wire brush, remove all the carbon from the combustion chambers.

NOTICE: Be careful not to scratch the cylinder block contact surface.

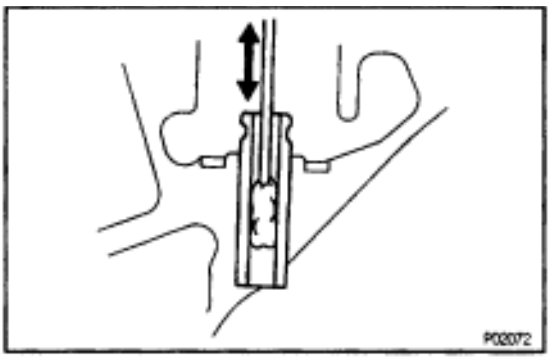

C. Clean valve guide bushings

Using a valve guide bushing brush and solvent, clean all the guide bushings.

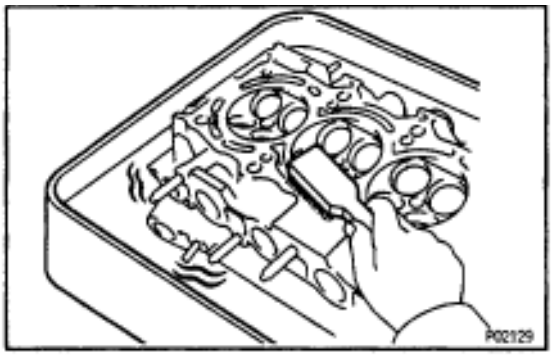

D. Clean cylinder head

Using a soft brush and solvent, thoroughly clean the cylinder head.

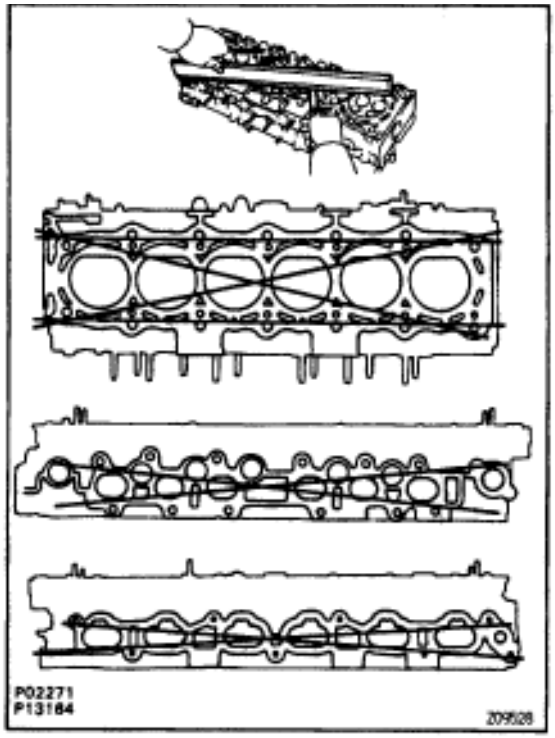

3. INSPECT CYLINDER HEAD

A. Inspect for flatness

Using precision straight edge and feeler gauge, measure the surfaces contacting the cylinder block, intake and exhaust manifolds for warpage.

Maximum warpage:

0.10 mm (0.0039 in.)

If warpage is greater than maximum, replace the cylinder head.

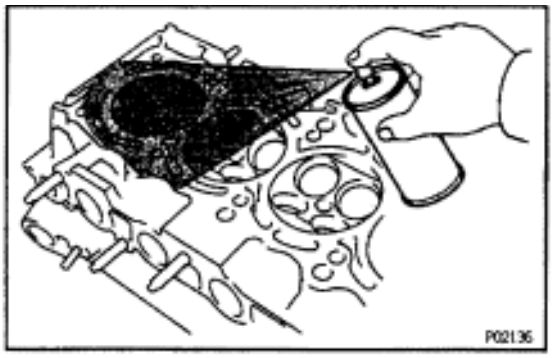

B. Inspect for cracks

Using a dye penetrant, check the combustion chamber, intake ports, exhaust ports and cylinder block surface for cracks.

If cracked, replace the cylinder head.

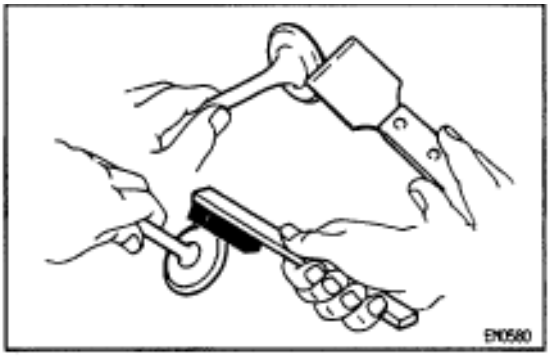

4. CLEAN VALVES

(a) Using a gasket scraper, chip off any carbon from the valve head.

(b) Using a wire brush, throughly clean the valve.

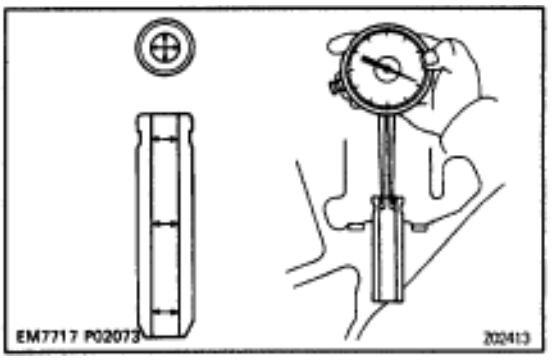

5. INSPECT VALVE STEMS AND GUIDE BUSHINGS

(a) Using a caliper gauge, measure the inside diameter of the guide bushing.

Bushing inside diameter:

6.010–6.030 mm (0.2366–0.2374 in.)

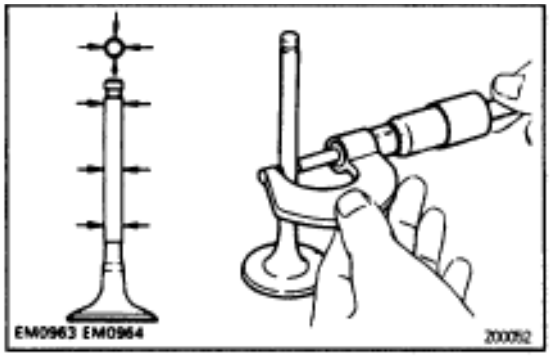

(b) Using a micrometer, measure the diameter of the valve stem.

Valve stem diameter:

Intake

5.970–5.985 mm (0.2350–0.2356 in.)

Exhaust

5.965–5.980 mm (0.2348–0.2354 in.)

(c) Subtract the valve stem diameter measurement from the guide bushing inside diameter measurement.

Standard oil clearance:

Intake

.025–0.060 mm (0.0010–0.0024 in.)

Exhaust

.030–0.065 mm (0.0012–0.0026 in.)

Maximum oil clearance:

Intake

.08 mm (0.0031 in.)

Exhaust

.10 mm (0.0039 in.)

If the clearance is greater than maximum, replace the valve and guide bushing.

6. IF NECESSARY, REPLACE VALVE GUIDE BUSHINGS

(a) Using SST and a hammer, tap out the guide bushing.

SST 09201–10000 (09201–01060).
09608–30022 (09608–05010)

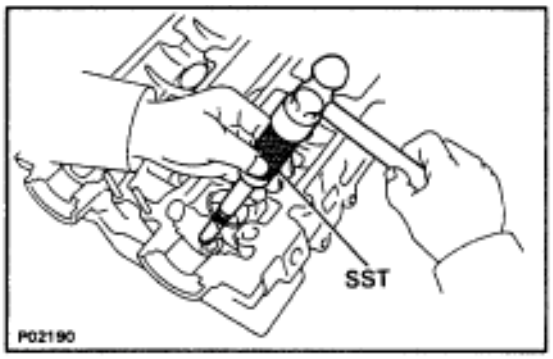

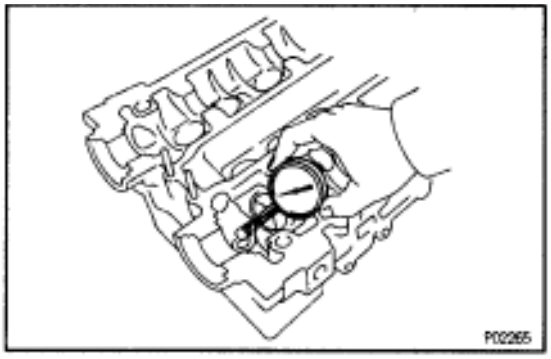

(b) Using a caliper gauge, measure the bushing bore diameter of the cylinder head.

Both intake and exhaust

Bushing bore diameter mm (in.)	Bushing size
10.985–11.006 mm (0.4325–0.4333 in.)	Use STD
11.035–11.056 mm (0.4344–0.4353 in.)	Use O/S 0.05

(c) Select a new guide bushing (STD or O/S 0.05).

If the bushing bore diameter of the cylinder head is greater than 11.006 mm (0.4333 in.), machine the bushing bore to the following dimension:

11.035–11.056 mm (0.4344–0.4353 in.)

If the bushing bore diameter of the cylinder head is greater than 11.056 mm (0.4353 in.), replace the cylinder head.

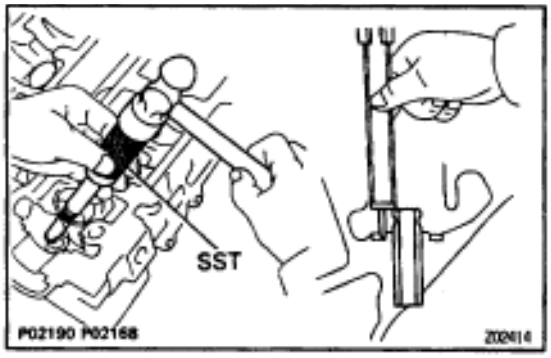

(d) Using SST and a hammer, tap in a new guide bushing to the specified protrusion height.
SST 09201–10000 (09201–01060), 09608–30022 (09608–05010)
Protrusion height:
Intake
12.3–12.7 mm (0.484–0.500 in.)
Exhaust
11.4–11.8 mm (0.449–0.465 in.)

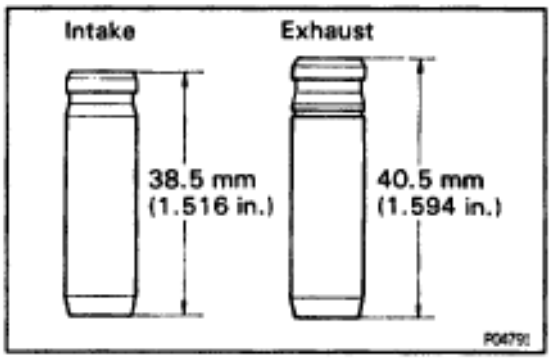

HINT: Different bushings are used for the intake and exhaust.

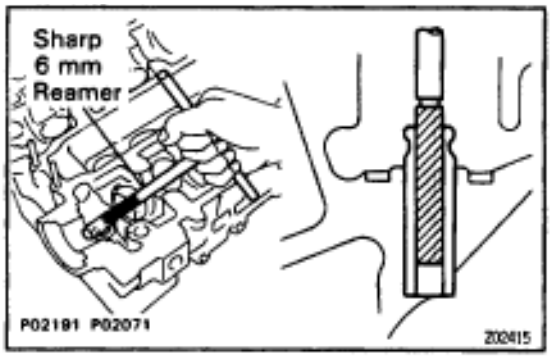

(e) Using a sharp 6 mm reamer, ream the guide bushing to obtain the standard specified clearance (See step 6) between the guide bushing and valve stem.

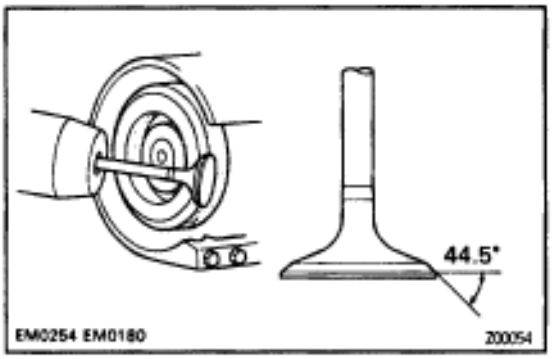

7. INSPECT AND GRIND VALVES
(a) Grind the valve enough to remove pits and carbon.
(b) Check that the valve is ground to the correct valve face angle.
Valve face angle:
44.5°

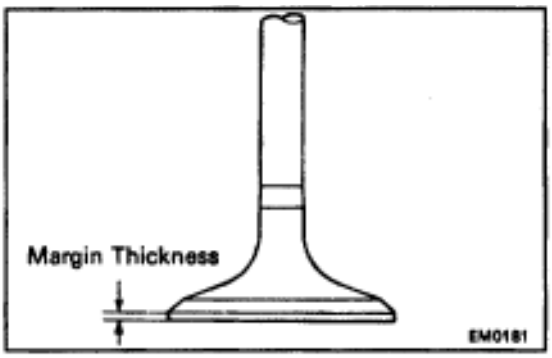

(c) Check the valve head margin thickness.
Standard margin thickness:
0.8–1.2 mm (0.031–0.047 in.)
Minimum margin thickness:
0.5 mm (0.020 in.)
If the margin thickness is less than minimum, replace the valve.

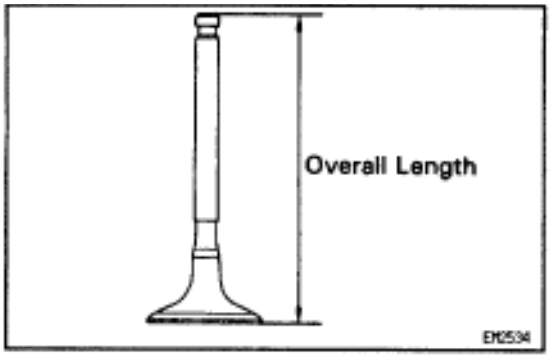

(d) Check the valve overall length.

Standard overall length:

Intake

98.29–98.79 mm (3.8697–3.8894 in.)

Exhaust

98.84–99.34 mm (3.8913–3.9110 in.)

Minimum overall length:

Intake

98.19 mm (3.8657 in.)

Exhaust

98.74 mm (3.8874 in.)

If the overall length is less than minimum, replace the valve.

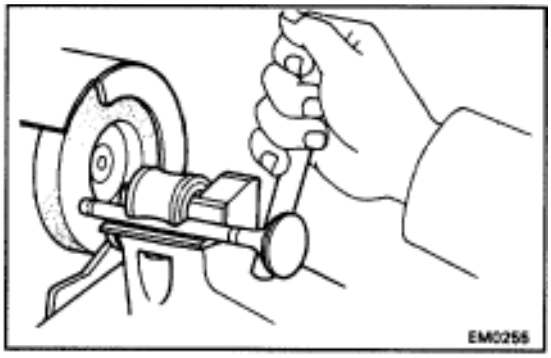

(e) Check the surface of the valve stem tip for wear.

If the valve stem tip is worn, resurface the tip with a grinder or replace the valve.

NOTICE: Do not grind off more than the minimum overall length.

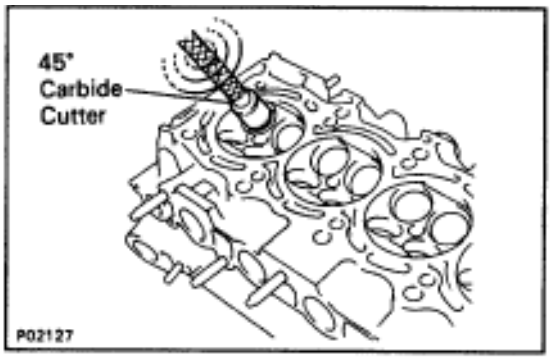

8. INSPECT AND CLEAN VALVE SEATS

(a) Using a 45° carbide cutter, resurface the valve seats.

Remove only enough metal to clean the seats.

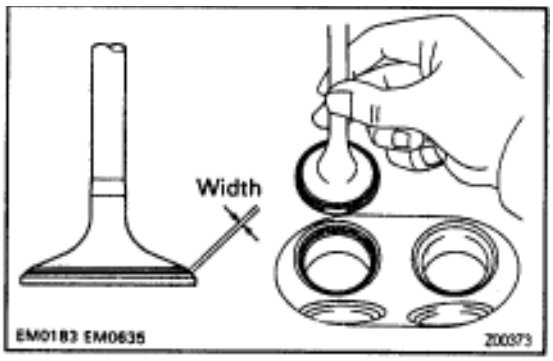

(b) Check the valve seating position.

Apply a thin coat of prussian blue (or white lead) to the valve face. Lightly press the valve against the seat. Do not rotate the valve.

(c) Check the valve face and seat for the following:

- If blue appears 360° around the face, the valve is concentric. If not, replace the valve.
- If blue appears 360° around the valve seat, the guide and face are concentric. If not, resurface the seat.

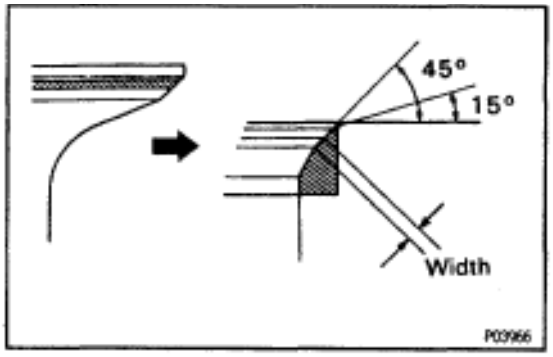

- Check that the seat contact is in the middle of the valve face with the following width:

Intake

1.0–1.4 mm (0.039–0.055 in.)

Exhaust

1.2–1.6 mm (0.047–0.063 in.)

If not, correct the valve seats as follows:

- If the seating is too high on the valve face, use 15° and 45° cutters to correct the seat.

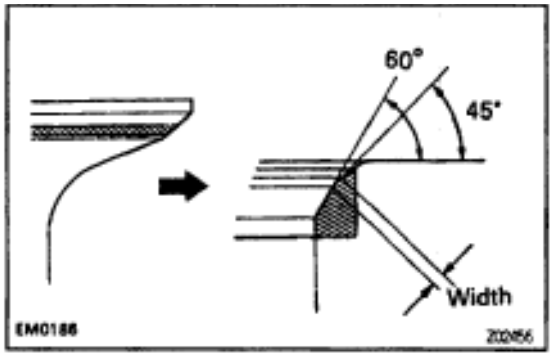

- If the seating is too low on the valve face, use 60° and 45° cutters to correct the seat.

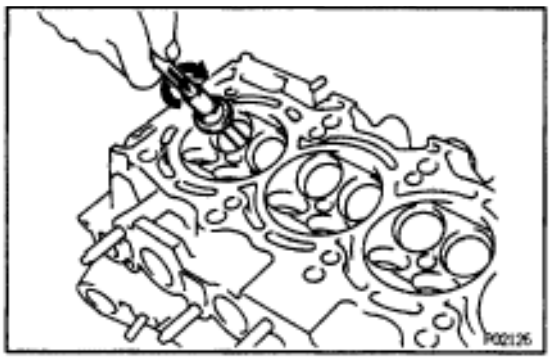

(d) Hand–lap the valve and valve seat with an abrasive compound.
(e) After hand–lapping, clean the valve and valve seat.

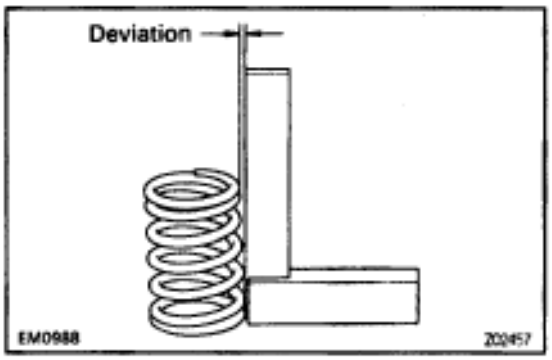

9. INSPECT VALVE SPRINGS

(a) Using a steel square, measure the deviation of the valve spring.

Maximum deviation:

2.0 mm (0.079 in.)

If deviation is greater than maximum, replace the valve spring.

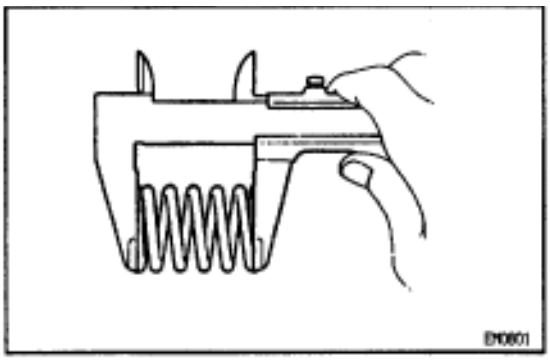

(b) Using vernier calipers, measure the free length of the valve spring.

Free length:

Blue painted mark

41.74 mm (1.6433 in.)

Yellow painted mark

41.70 mm (1.6417 in.)

If the free length is not as specified, replace the valve spring.

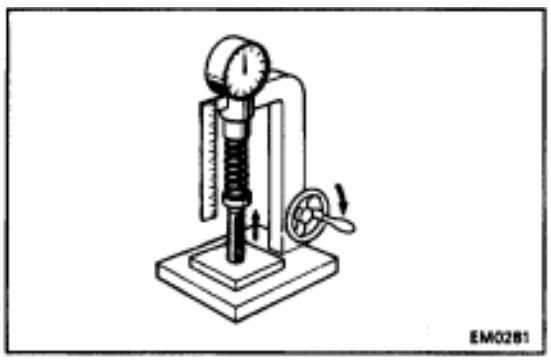

(c) Using a spring tester, measure the tension of the valve spring at the specified installed length.

Installed tension:

186–206 N (19.0–21.0 kgf, 42–46 lbf) at 34.5 mm (1.358 in.)

If the installed tension is not as specified, replace the valve spring.

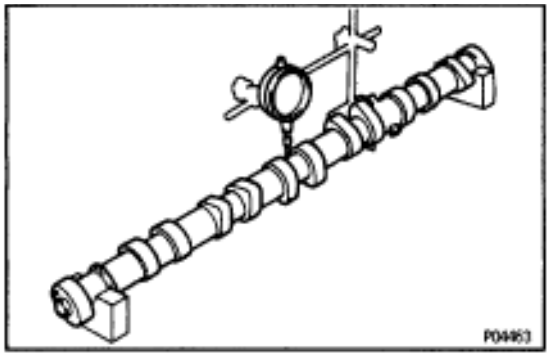

10. INSPECT CAMSHAFTS AND BEARINGS

A. Inspect camshaft for runout

(a) Place the camshaft on V–blocks.

(b) Using a dial indicator, measure the circle runout at the center journal.

Maximum circle runout:

0.08 mm “(0.0031 in.)

If the circle runout is greater than maximum, replace the camshaft.

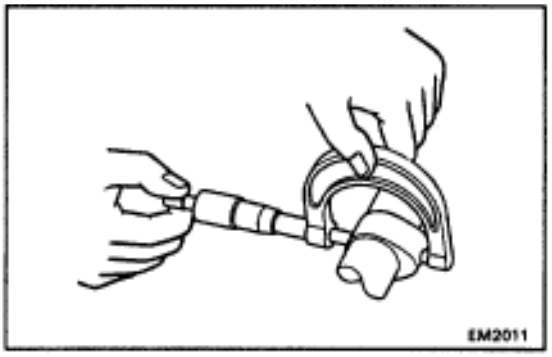

B. Inspect cam lobes

Using a micrometer, measure the cam lobe height.

Standard cam lobe height:

Intake

44.570–44.670 mm (1.7547–1.7587 in.)

Exhaust

44.770–44.870 mm (1.7626–1.7665 in.)

Maximum cam lobe height:

Intake

44.42 mm (1.7488 in.)

Exhaust

44.62 mm (1.7567 in.)

If the cam lobe height is less than minimum, replace the camshaft.

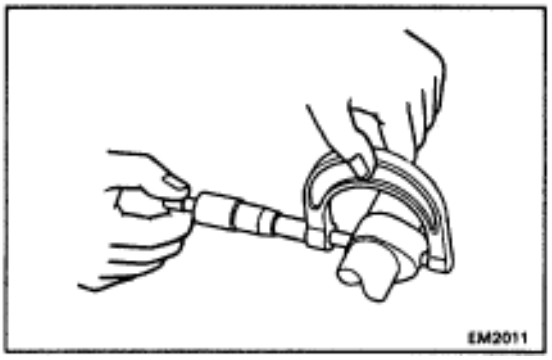

C. Inspect camshaft journals

Using a micrometer, measure the journal diameter.

Journal diameter:

28.949–28.965 mm (1.1397–1.1404 in.)

If the journal diameter is not as specified, check the oil clearance.

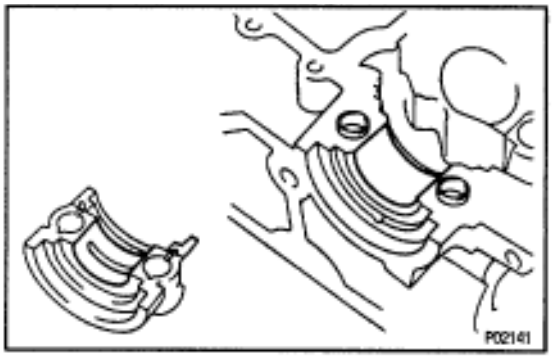

D. Inspect camshaft bearings

Check the bearings for flaking and scoring.

If the bearings are damaged, replace the bearing caps and cylinder head as a set.

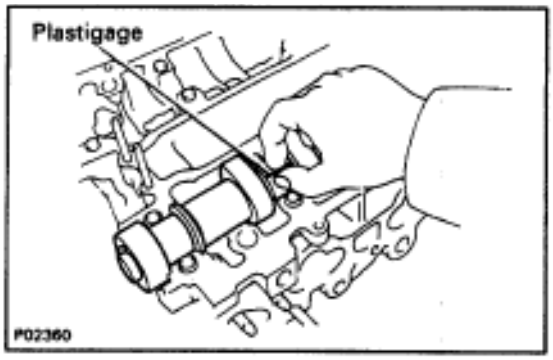

E. Inspect camshaft journal oil clearance

(a) Clean the bearing caps and camshaft journals.

(b) Place the camshafts on the cylinder head.

(c) Lay a strip of Plastigage across each of the camshaft journals.

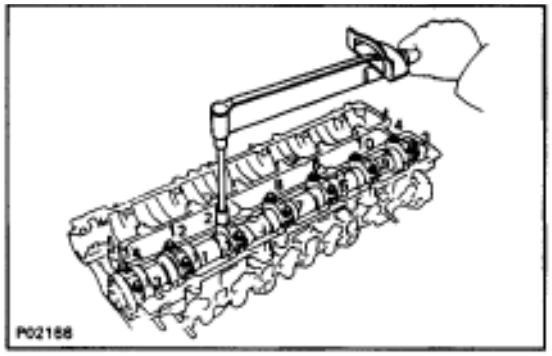

(d) Install the bearing caps.
(See step 2 in cylinder head installation (2JZ–GE))
Torque: 20 N·m (200 kgf·cm, 14 ft·lbf)
NOTICE: Do not turn the camshaft.

(e) Remove the bearing caps.

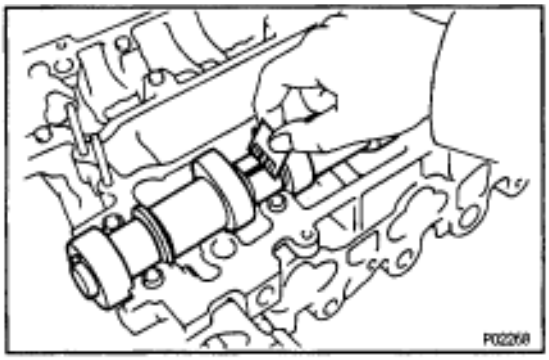

(f) Measure the Plastigage at its widest point.
Standard oil clearance:
0.035–0.072 mm (0.0014–0.0028 in.)
Maximum oil clearance:
0.10 mm (0.0039 in.)
If the oil clearance is greater than maximum, replace the camshaft. If necessary, replace the bearing caps and cylinder head as a set.

(g) Completely remove the Plastigage.

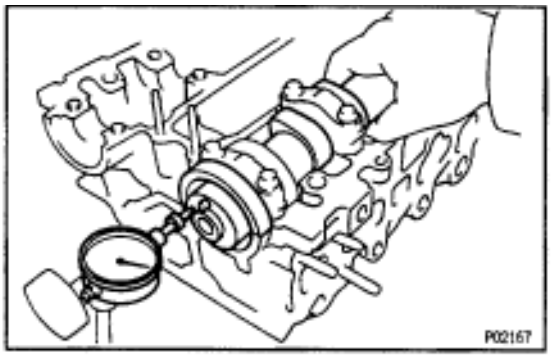

F. Inspect camshaft thrust clearance

(a) Install the camshafts.
(See step 2 in cylinder head installation (2JZ–GE))

(b) Using a dial indicator, measure the thrust clearance while moving the camshaft back and forth.
Standard thrust clearance:
0.080–0.190 mm (0.0031–0.0075 in.)
Maximum thrust clearance:
0.30 mm (0.0118 in.)
If the thrust clearance is greater than maximum, replace the camshaft. If necessary, replace the bearing caps and cylinder head as a set.

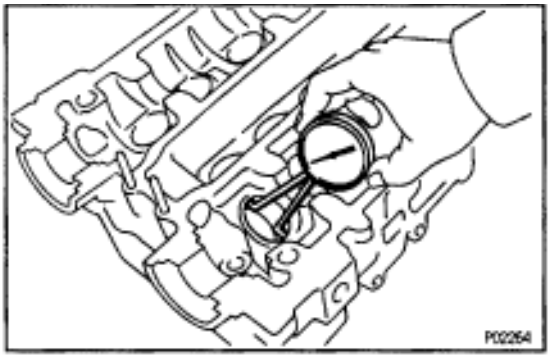

11. INSPECT VALVE LIFTERS AND LIFTER BORES

(a) Using a caliper gauge, measure the lifter bore diameter of the cylinder head.
Lifter bore diameter:
31.000–31.016 mm (1.2205–1.2211 in.)

(b) Using a micrometer, measure the lifter diameter.
Lifter diameter:
30.966–30.976 mm (1.2191–1.2195 in.)

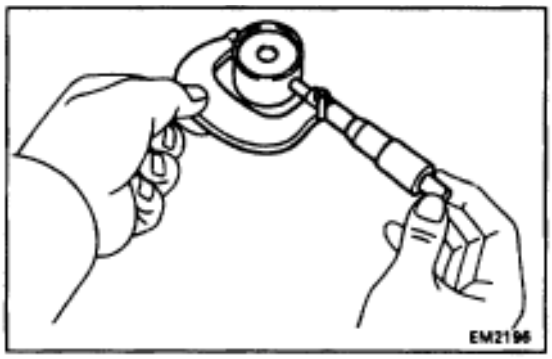

(c) Subtract the lifter diameter measurement from the lifter bore diameter measurement.
Standard oil clearance:
0.024–0.050 mm (0.0009–0.0020 in.)
Maximum oil clearance:
0.07 mm (0.0028 in.)
If the oil clearance is greater than maximum, replace the lifter. If necessary, replace the cylinder head.

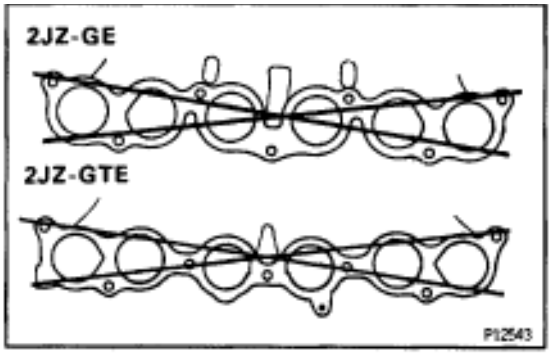

12. INSPECT AIR INTAKE CHAMBER

Using a precision straight edge and feeler gauge, measure the surfaces contacting the intake manifold for warpage.

Maximum warpage:

0.15 mm (0.0059 in.)

If warpage is greater than maximum, replace the chamber.

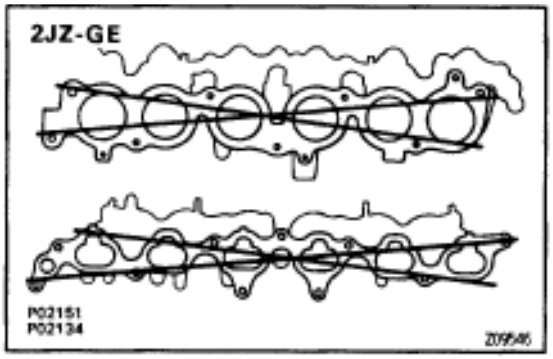

13. INSPECT INTAKE MANIFOLD

Using a precision straight edge and feeler gauge, measure the surfaces contacting the cylinder head and air intake chamber for warpage.

Maximum warpage:

0.15 mm (0.0059 in.)

If warpage is greater than maximum, replace the manifold.

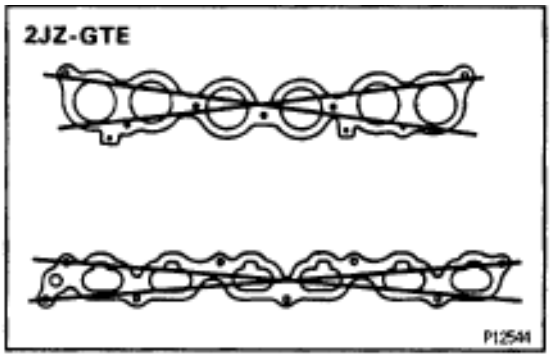

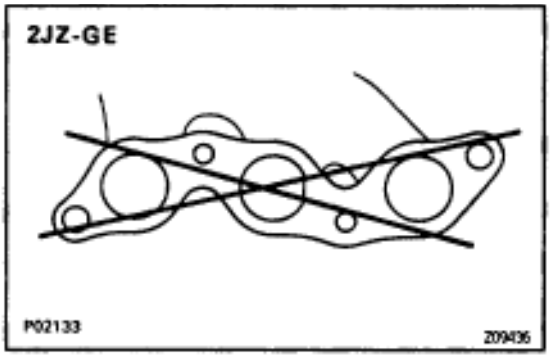

14. 2JZ–GE:

INSPECT EXHAUST MANIFOLDS

Using a precision straight edge and feeler gauge, measure the surfaces contacting the cylinder head for warpage.

Maximum warpage:

0.50 mm (0.0196 in.)

If warpage is greater than maximum, replace the manifold.

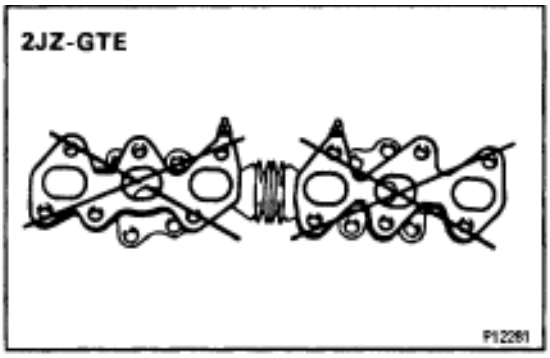

15. 2JZ–GTE:

INSPECT EXHAUST MANIFOLD

Using a precision straight edge and feeler gauge, measure the surfaces contacting the cylinder head for warpage.

Maximum warpage:

0.80 mm (0.0315 in.)

If warpage is greater than maximum, replace the manifold.

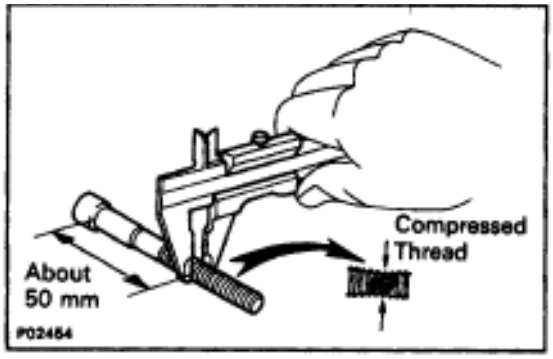

16. INSPECT CYLINDER HEAD BOLTS

Using a vernier caliper, measure the thread outside diameter of the bolt.

Standard outside diameter:

10.8–11.0 mm (0.425–0.433 in.)

Minimum outside diameter:

10.7 mm (0.421 in.)

If the diameter is less than minimum, replace the bolt.

CYLINDER HEAD ASSEMBLY

HINT:

- Thoroughly clean all parts to be assembled.
- Before installing the parts, apply new engine oil to all sliding and rotating surfaces.
- Replace all gaskets and oil seals with new ones.

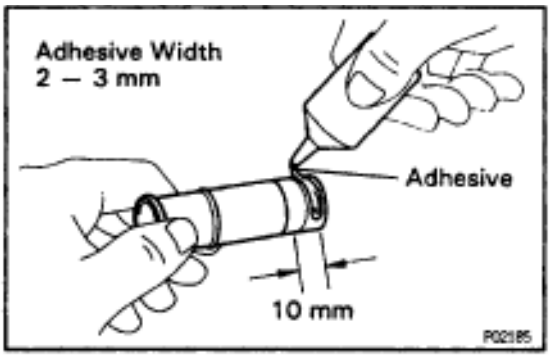

1. INSTALL HEATER UNION

HINT: When using a new cylinder head, a new heater union must be installed.

(a) Apply adhesive to the end of the heater union as shown in the illustration.

Adhesive:

Part No. 08833–00070, THREE BOND 1324 or equivalent

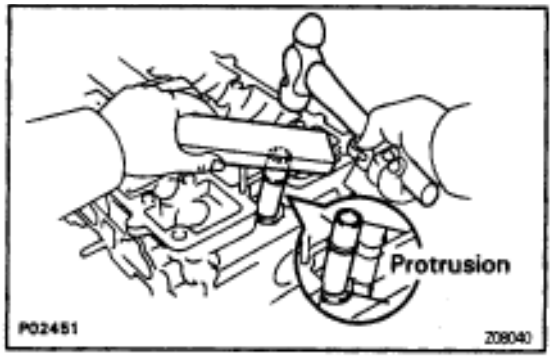

(b) Using a wooden block and hammer, tap in a new heater union, leaving standard position protruding from the cylinder head.

Standard protrusion:

2JZ–GE

48 mm (1.89 in.)

2JZ–GTE

73 mm (2.87 in.)

NOTICE: Do not tap it in too far.

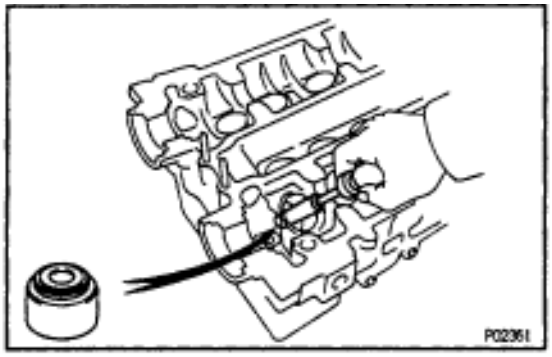

2. INSTALL VALVES

(a) Install a new oil seal on the valve guide bushing.

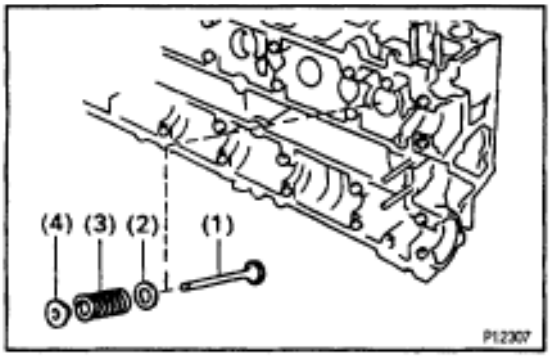

(b) Install these parts:
(1) Valve
(2) Spring seat
(3) Valve spring
(4) Spring retainer

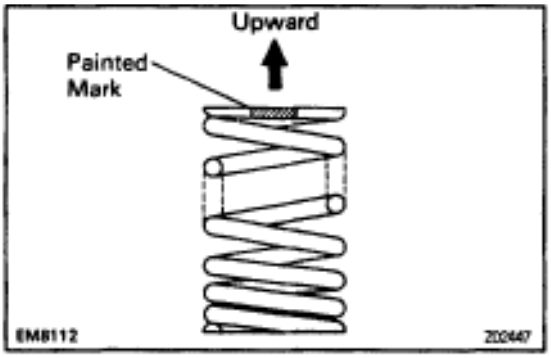

HINT: Install the valve spring, facing the painted mark upward.

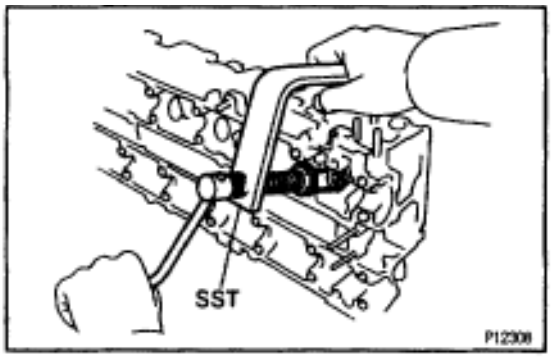

(c) Using SST, compress the valve spring and place the 2 keepers around the valve stem.
SST 09202–70010

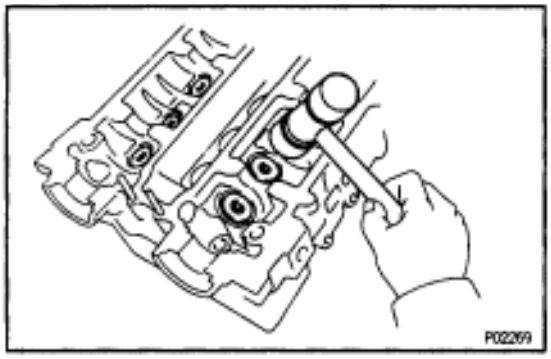

(d) Using a plastic–faced hammer, lightly tap the valve stem tip to ensure a proper fit.

3. INSTALL VALVE LIFTERS AND SHIMS

(a) Install the valve lifter and shim.
(b) Check that the valve lifter rotates smoothly by hand.

4. INSTALL EGR COOLER

Install a new gasket and the EGR cooler with the 8 bolts.
Torque: 8.8 N·m (90 kgf·cm, 78 in.·lbf)

5. 2JZ–GE:
INSTALL ECT SENSOR AND SENDER GAUGE
Torque: 20 N·m (200 kgf·cm, 14 ft·lbf)

6. 2JZ–GE:
INSTALL GROUND STRAP AND THROTTLE CABLE BRACKET

7. 2JZ–GE:
INSTALL ENGINE HANGERS
Torque: 39 N·m (400 kgf·cm, 29 ft·lbf)

8. 2JZ–GTE:
INSTALL CAMSHAFT POSITION SENSORS
Install the gasket and sensor with the 2 bolts.
Torque: 8.8 N·m (90 kgf·cm, 78 in.·lbf)

9. 2JZ–GTE:
INSTALL ENGINE HANGERS AND GROUND STRAP
Torque: 39 N·m (400 kgf·cm, 29 ft·lbf)

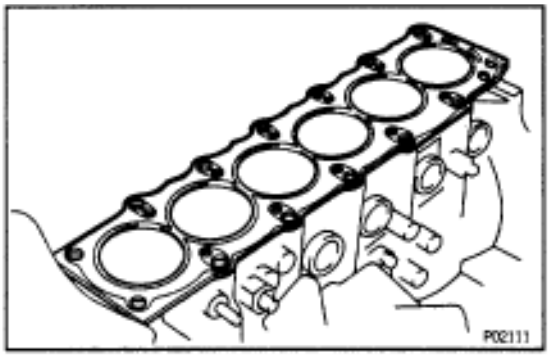

CYLINDER HEAD INSTALLATION (2JZ–GE)

1. INSTALL CYLINDER HEAD

A. Place cylinder head on cylinder block

(a) Place a new cylinder head gasket in position on the cylinder block.
NOTICE: Be sure to install it correctly.

(b) Place the cylinder head in position on the cylinder head gasket.

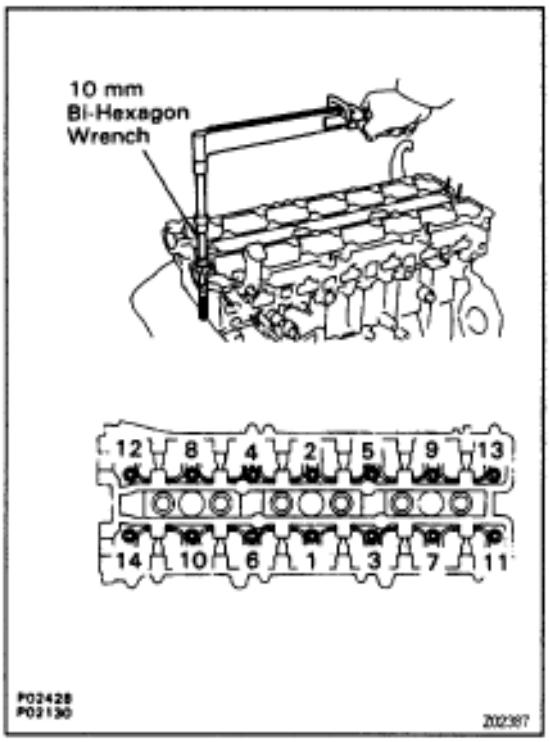

B. Install cylinder head bolts
HINT:
- The cylinder head bolts are tightened in 2 progressive steps (steps (c) and (f)).
- If any of bolts break or deform, replace them.

(a) Apply a light coat of engine oil on the threads and under the heads of the cylinder head bolts.

(b) Install the 14 plate washers to each cylinder head bolt.

(c) Using a 10 mm bi–hexagon wrench, uniformly tighten the cylinder head bolts, in several passes, in the sequence shown.
Torque: 34 N·m (350 kgf·cm, 25 ft·lbf)
If any of the bolts do not meet the torque specification, replace the bolt.

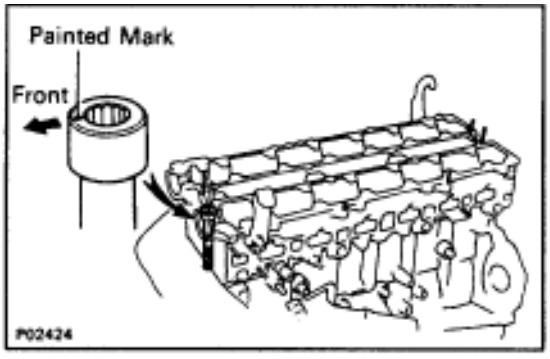

(d) Mark the front of the cylinder head bolt head with paint.

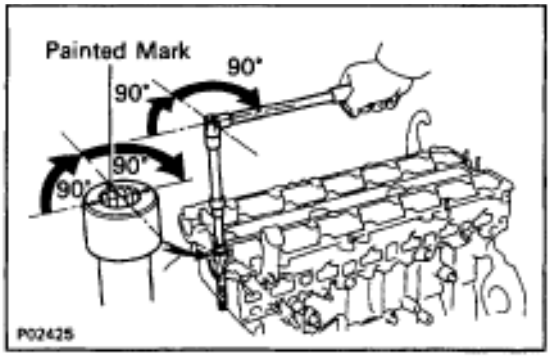

(e) Retighten the cylinder head bolts by 90° in the numerical order shown in the illustration on previous page.
(f) Retighten cylinder head bolts by an additional 90° shown in the illustration on previous page.
(g) Check that the painted mark is now turned to the rear.

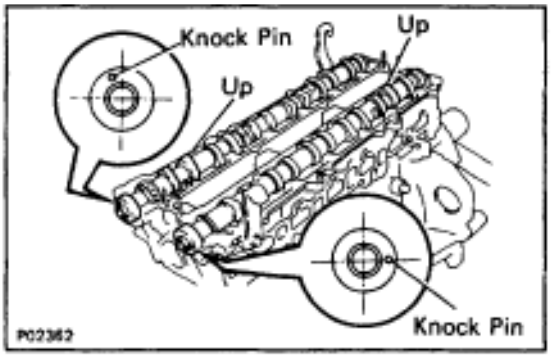

2. INSTALL CAMSHAFTS

(a) Apply engine oil to the thrust portion of the camshaft.
(b) Place the camshaft on the cylinder head with the cam lobe facing up as shown.

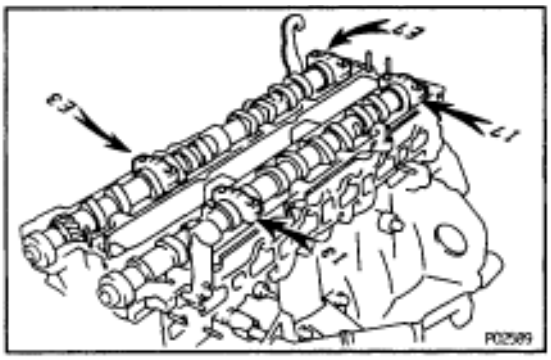

(c) Place the No.3 and No.7 bearing caps in their proper location.

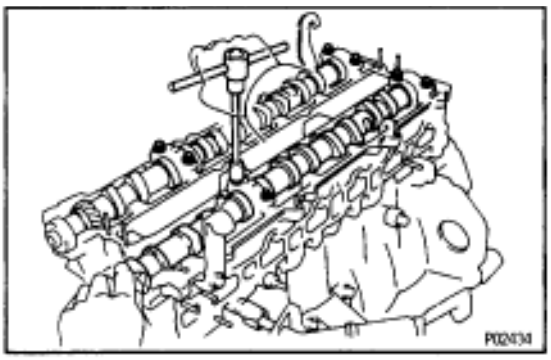

(d) Apply a light coat of engine oil on the threads and under the heads of the bearing cap bolts.
(e) Temporarily tighten these bearing cap bolts uniformly and alternately, in several passes, until the bearing caps are snug with the cylinder head.

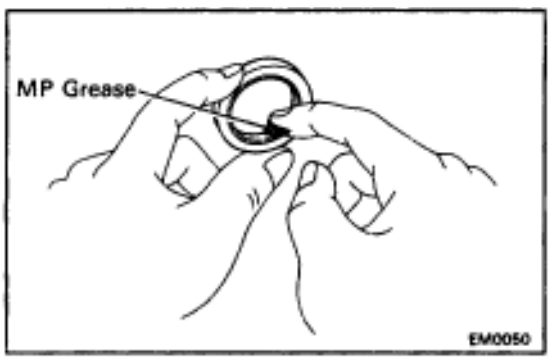

(f) Apply MP grease to a new camshaft oil seal lip.

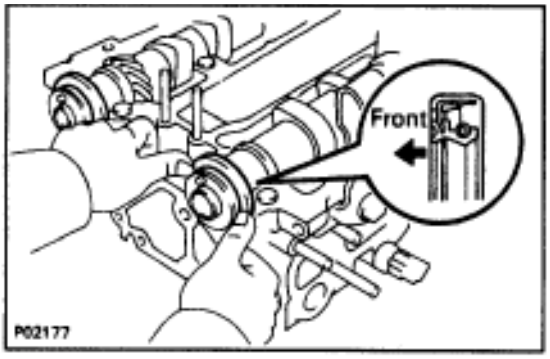

(g) Install the 2 oil seals to the camshafts.

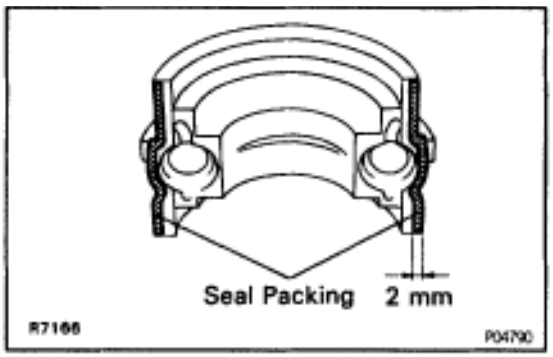

(h) Clean the installed surfaces of the No.1 bearing cap and cylinder head with cleaner.

(i) Apply seal packing to the No.1 bearing cap as shown.
Seal packing:
Part No. 08826–00080 or equivalent

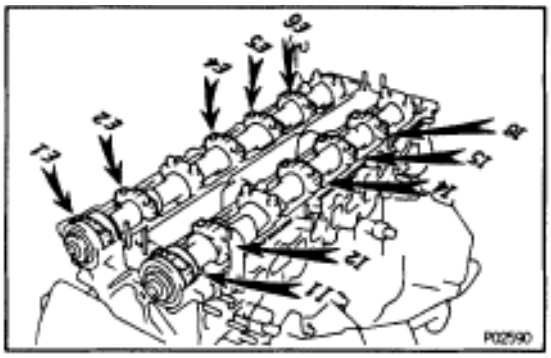

(j) Install the No.1, No.2, No.4, No.5 and No.6 bearing caps in their proper locations.

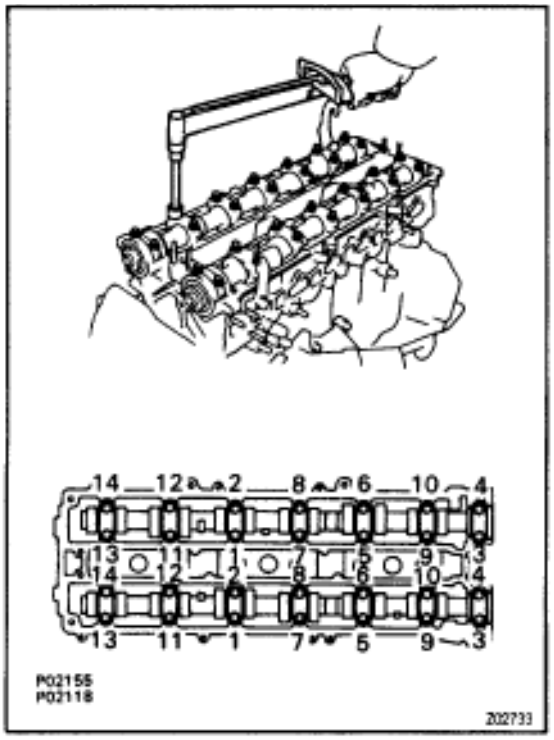

(k) Apply a light coat of engine oil on the threads and under the heads of the bearing cap bolts.

(l) Install and uniformly tighten the 14 bearing cap bolts on one side, in several passes, in the sequence shown.
Torque: 20 N·m (200 kgf·cm, 14 ft·lbf)

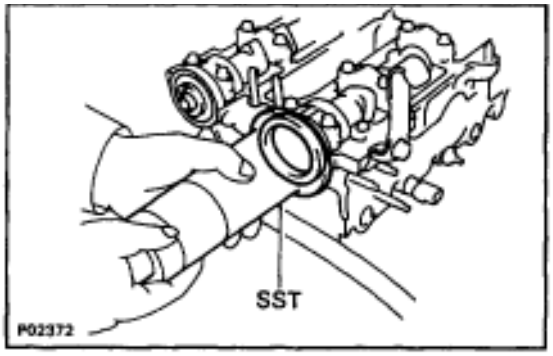

(m) Using SST, push the 2 oil seals in as far as they can go.
SST 09316–60010 (09316–00010, 09316–00050)

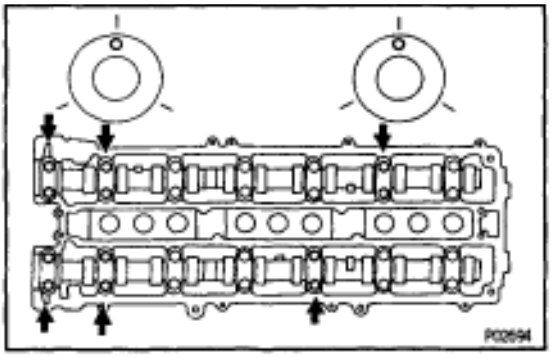

(n) Rotate the camshaft with a wrench at the hexagon position, bring the forward straight pin up.
(o) Loosen the 3 bearing cap bolts as shown, until they can be turned by hand; retighten, in several passes.
Torque: 20 N·m (200 kgf·cm, 14 ft·lbf)

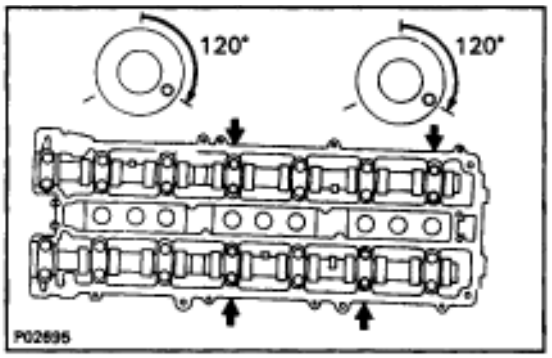

(p) Turn the camshaft 1/3 of revolution.
(q) Loosen the 2 bearing cap bolts as shown, until they can be turned by hand; retighten, in several passes.
Torque: 20 N·m (200 kgf·cm, 14 ft·lbf)

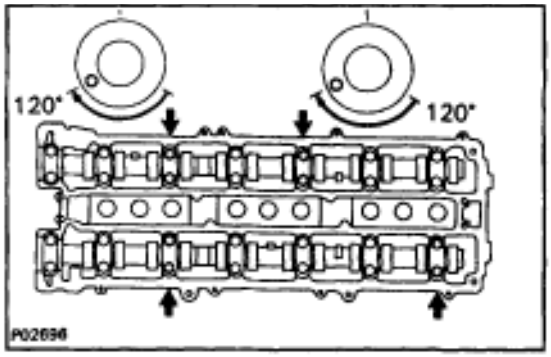

(r) Turn the camshaft a further 1/3 of a revolution.
(s) Loosen the 2 bearing cap bolts as shown, until they can be turned by hand; retighten, in several passes.
Torque: 20 N·m (200 kgf·cm, 14 ft·lbf)

3. CHECK AND ADJUST VALVE CLEARANCE
(See steps 5 to 6 in valve clearance inspection and adjustment)
Turn the camshaft, and position the cam lobe upward, check and adjust the valve clearance.

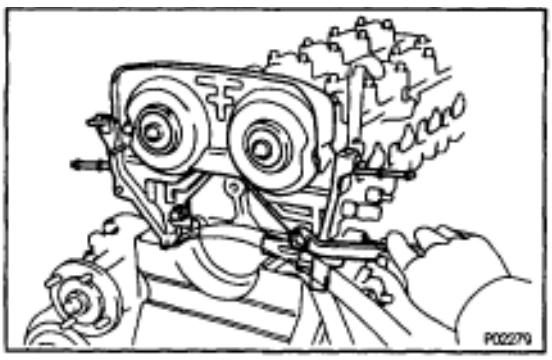

4. INSTALL NO.4 TIMING BELT COVER
Install the timing belt cover with 4 bolts.
Torque: 8.8 N·m (90 kgf·cm, 78 in.·lbf)

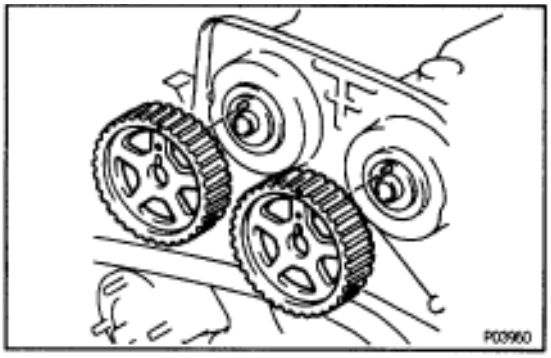

5. INSTALL CAMSHAFT TIMING PULLEYS

(a) Align the camshaft knock pin with the groove in the pulley, and slide on the pulley.

(b) Temporarily install the timing pulley bolt.

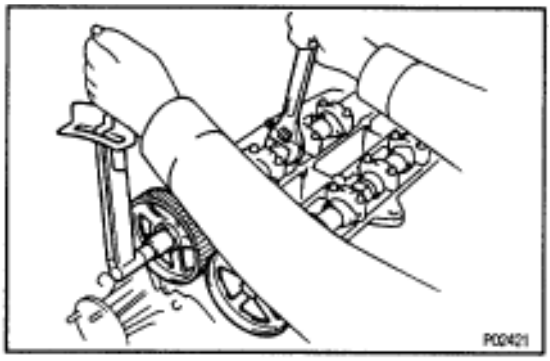

(c) Hold the hexagon portion of the camshaft with a wrench, and tighten the timing pulley bolt.
Torque: 79 N·m (810 kgf·cm, 59 ft·lbf)

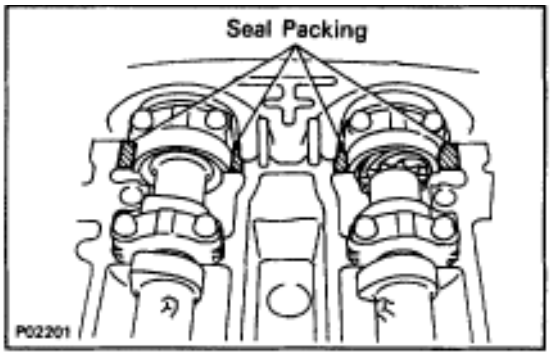

6. INSTALL NO.3, NO.1 AND NO.2 CYLINDER HEAD COVERS

(a) Remove any old packing (FIPG) material.

(b) Apply seal packing to the cylinder head as shown in the illustration.
Seal packing:
Part No. 08826–00080 or equivalent

(c) Install the gaskets to the No.1 and No.2 cylinder head covers.

(d) Install the No.2 cylinder head cover with the 4 bolts.
Torque: 8.3 N·m (85 kgf·cm, 74 in.·lbf)

(e) Install the No.1 cylinder head cover with the 4 bolts.
Torque: 8.3 N·m (85 kgf·cm, 74 in.·lbf)

(f) Install the No.3 cylinder head cover with the 4 bolts and 4 nuts.
Torque: 8.3 N·m (85 kgf·cm, 74 in.·lbf)

(g) Install the PCV valve.

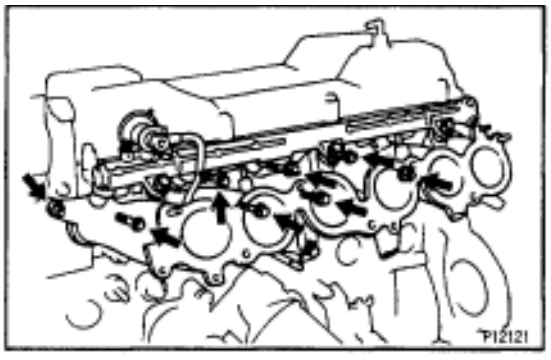

7. INSTALL INTAKE MANIFOLD AND DELIVERY PIPE ASSEMBLY

Install a new gasket, the intake manifold and delivery pipe assembly with the 6 bolts and 2 nuts.
Torque: 27 N·m (280 kgf·cm, 20 ft·lbf)

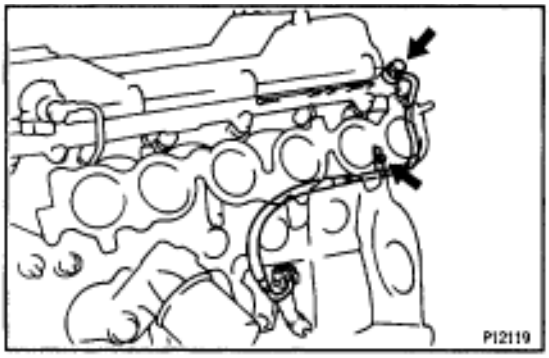

8. INSTALL FUEL INLET PIPE

(a) Connect the fuel inlet pipe with 2 new gaskets and the union bolt.
Torque: 42 N·m (420 kgf·cm, 30 ft·lbf)

(b) Install the clamp bolt to the intake manifold.

9. INSTALL FUEL PRESSURE PULSATION DAMPER
(See fuel pressure pulsation damper installation in SFI System)

10. INSTALL INTAKE MANIFOLD STAY
Torque: 39 N·m (400 kgf·cm, 29 ft·lbf)

11. INSTALL WATER OUTLET AND NO.1 BYPASS HOSE ASSEMBLY

12. CONNECT ENGINE WIRE

(a) Install the engine wire protector to the intake manifold with the 3 nuts.

(b) Connect these connectors:
- 6 injector connectors

HINT: The No.1, No.3 and No.5 injector connectors are dark gray, and the No.2, No.4 and No.6 injector connectors are gray.
- ECT sensor connector
- ECT sender gauge connector

(c) Install the 2 wire clamps to the intake manifold with the bolts.

(d) Install the 2 ground straps to the intake manifold with the bolts.

(e) Install the engine wire bracket to the water pump with the bolt.

13. INSTALL VACUUM CONTROL VALVE SET
Torque: 21 N·m (210 kgf·cm, 15 ft·lbf)

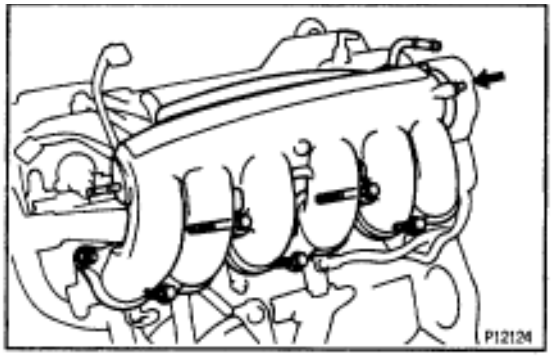

14. INSTALL AIR INTAKE CHAMBER

(a) Install a new gasket and the intake chamber with the 5 bolts and nut.
Torque: 27 N·m (280 kgf·cm, 20 ft·lbf)

(b) Install the bolt holding the engine wire protector to the air intake chamber.

(c) Except California:
Connect the vacuum sensing hose to the fuel pressure regulator.

15. INSTALL STARTER
(See starter removal in Starting System)

16. INSTALL OIL DIPSTICK GUIDES FOR ENGINE AND TRANSMISSION

(a) Install a new O–ring to the dipstick guide.

(b) Apply soapy water to the O–ring.

(c) Connect the dipstick guide end to the oil pan.

(d) Install the 2 dipstick guides with the 2 bolts.

17. INSTALL ENGINE WIRE BRACKET

18. CONNECT FUEL RETURN HOSE

19. INSTALL WATER BYPASS OUTLET AND NO.1 WATER BYPASS PIPE
(See step 3 in water pump installation in Cooling System)

20. INSTALL TIMING BELT
(See steps 11 to 17 in timing belt removal)

21. INSTALL SPARK PLUGS

22. INSTALL DISTRIBUTOR AND CORDS ASSEMBLY
(See steps 2, 3 and 5 in distributor installation in Ignition System)

23. CONNECT HIGH–TENSION CORDS TO CYLINDER HEAD COVERS
(See step 1 in high–tension cords and cord clamps installation in Ignition System)

24. INSTALL NO.3 TIMING BELT COVER

25. INSTALL CYLINDER HEAD REAR COVER

26. INSTALL NO.2 VACUUM PIPE AND VSV ASSEMBLY

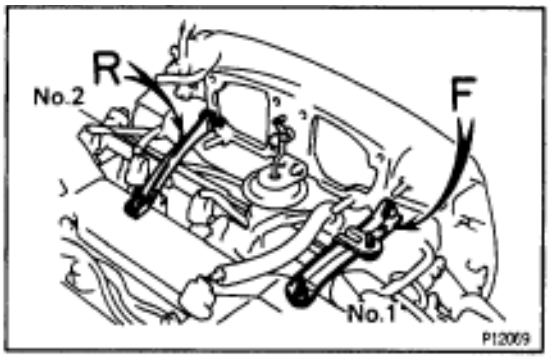

27. INSTALL AIR INTAKE CHAMBER STAYS
HINT: The No.1 stay is marked with ”F”, and No.2 stay is marked with ”R”.

(a) Install the No.1 stay with the bolt and nut.
Torque: 18 N·m (185 kgf·cm, 13 ft·lbf)

(a) Install the No.2 stay with the bolt and nut.
Torque: 18 N·m (185 kgf·cm, 13 ft·lbf)

28. INSTALL THROTTLE BODY AND INTAKE AIR CONNECTOR ASSEMBLY
(See in injector removal in SFI System)

29. CONNECT EVAP HOSE

30. CONNECT BRAKE BOOSTER VACUUM HOSE

31. INSTALL PS PUMP

(a) Install the pump rear stay with the 2 bolts.
Torque: 39 N·m (400 kgf·cm, 29 ft·lbf)

(b) Install the pump housing with the 2 bolts.
Torque: 58 N·m (590 kgf·cm, 43 ft·lbf)

(c) Connect these hoses:
- Air hose to No.4 timing belt cover
- Air hose to air intake chamber



32. INSTALL EXHAUST MANIFOLDS

(a) Install a new gasket and the exhaust manifold with 4 new nuts. Install the No.1 and No.2 exhaust manifolds.
Torque: 39 N·m (400 kgf·cm, 29 ft·lbf)

(b) Connect the 2 (main heated) oxygen sensor connectors.

(c) Except California:
Install the manifold heat insulator with the 4 nuts.

33. INSTALL NO.2 FRONT EXHAUST PIPE
(See step 6 in engine installation in Engine Mechanical)
34. INSTALL DRIVE BELT
35. INSTALL AIR CLEANER, VAF METER AND INTAKE AIR CONNECTOR PIPE ASSEMBLY
(See step 22 in engine installation in Engine Mechanical)
36. INSTALL AIR CLEANER DUCT
37. FILL WITH ENGINE COOLANT
38. START ENGINE AND CHECK FOR LEAKS
39. CHECK IGNITION TIMING
(See steps 8 to 12 in distributor installation in Ignition System)
40. INSTALL ENGINE UNDER COVER
41. PERFORM ROAD TEST
Check for abnormal noise, shock, slippage, correct shift points and smooth operation.
42. RECHECK ENGINE COOLANT LEVEL

CYLINDER HEAD INSTALLATION (2JZ–GTE)

1. INSTALL CYLINDER HEAD
(See step 1 in cylinder head installation (2JZ–GE))
2. INSTALL CAMSHAFTS
(See step 2 ((a) to (m)) in cylinder head installation (2JZ–GE))
3. CHECK AND ADJUST VALVE CLEARANCE
(See steps 5 to 6 in valve clearance inspection and adjustment)
Turn the camshaft, and position the cam lobe upward, check and adjust the valve clearance.
4. INSTALL NO.4 TIMING BELT COVER
(See step 4 in cylinder head installation (2JZ–GE))
5. INSTALL CAMSHAFT TIMING PULLEYS
(See step 5 in cylinder head installation (2JZ–GE))

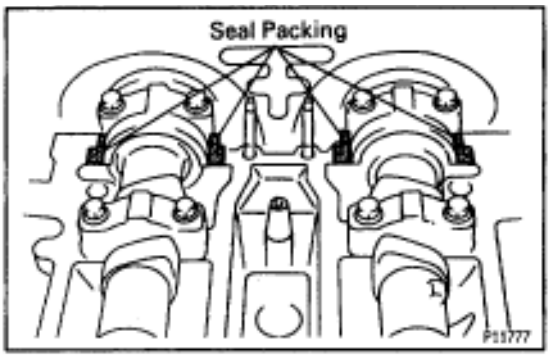

6. INSTALL NO.1 AND NO.2 CYLINDER HEAD COVERS
(a) Remove any old packing (FIPG) material.
(b) Apply seal packing to the cylinder head as shown in the illustration.
Seal packing:
Part No. 08826–00080 or equivalent
(c) Install the gaskets to the No.1 and No.2 cylinder head covers.

(d) Install the seal washers to the mounting bolts.
(e) Install the No.2 cylinder head cover with the 4 seal washers and 4 bolts.
Torque: 5.4 N·m (55 kgf·cm, 48 in.·lbf)
(f) Install the No.1 cylinder head cover with the 4 seal washers and 4 bolts.
Torque: 5.4 N·m (55 kgf·cm, 48 in.·lbf)
(g) Install the PCV valve.
(h) Install the cruise control actuator cable bracket and IAC valve pipe clamp with the 2 bolts.

7. INSTALL SPARK PLUGS

8. INSTALL IGNITION COILS ASSEMBLIES
(See ignition coils installation in Ignition System)

9. INSTALL TIMING BELT
(See steps 11 to 17 in timing belt installation)

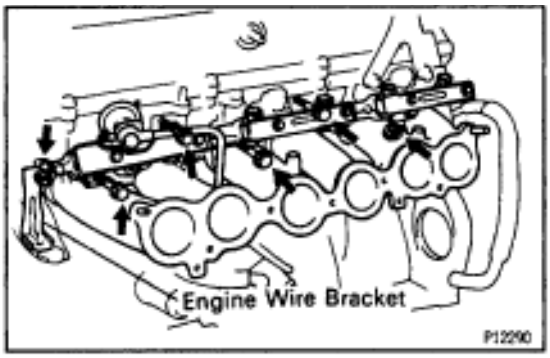

10. INSTALL INTAKE MANIFOLD AND DELIVERY PIPE ASSEMBLY
Install a new gasket, the intake manifold, delivery pipe assembly and engine wire bracket with the 4 bolts and 2 nuts.
Torque: 27 N·m (280 kgf·cm, 20 ft·lbf)

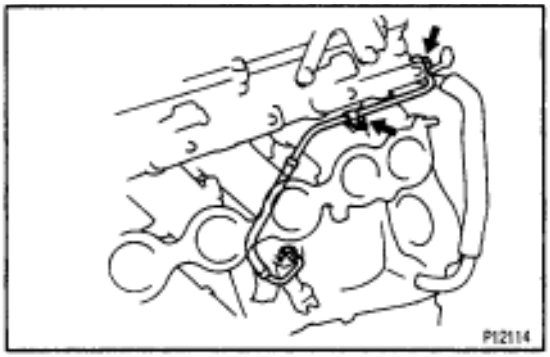

11. INSTALL FUEL INLET PIPE
(a) Connect the fuel inlet pipe with 2 new gaskets and the union bolt.
Torque: 42 N·m (420 kgf·cm, 30 ft·lbf)
(b) Install the clamp bolt to the intake manifold.

12. INSTALL FUEL PRESSURE PULSATION DAMPER
(See fuel pressure pulsation damper installation in SFI System)

13. INSTALL PRESSURE TANK AND VSV ASSEMBLY
Torque: 21 N·m (210 kgf·cm, 15 ft·lbf)

14. INSTALL STATER
(See starter installation in Starting System)

15. CONNECT ENGINE WIRE
(a) Install the engine wire protector to the intake manifold with the nut.
(b) Install the 2 ground straps to the intake manifold with the bolts.
(c) Connect these connectors and clamps:
- VSV connector fo EVAP

- 6 injectors connectors

HINT: The No.1, No.3 and No.5 injector connectors are dark gray, and the No.2, No.4 and No.6 injector connectors are gray.

- 2 camshaft position sensor connectors
- 3 engine wire clamps to injector holders

16. INSTALL AIR INTAKE CHAMBER ASSEMBLY
(See injector installation in SFI System)

17. CONNECT FUEL RETURN HOSE

18. INSTALL PS PUMP
Torque: 58 N·m (590 kgf·cm, 43 ft·lbf)

19. INSTALL WATER OUTLET AND NO.1 WATER BYPASS PIPE

(a) Install 2 new O–rings to the No.1 water bypass pipe.
(b) Apply soapy water to the O–rings.
(c) Install the No.1 water bypass pipe to the water pump.
(d) Install a new gasket and the water outlet with the 2 bolts.
Torque: 21 N·m (210 kgf·cm, 15 ft·lbf)
(e) Connect the ECT sensor and sender gauge connectors.
(f) Connect the upper radiator hose to the water outlet.

20. INSTALL DRIVE BELT
Install the drive belt by turning the drive belt tensioner clockwise.

21. M/T:
INSTALL DRIVE BELT TENSIONER DAMPER
(See step 19 in timing belt installation)

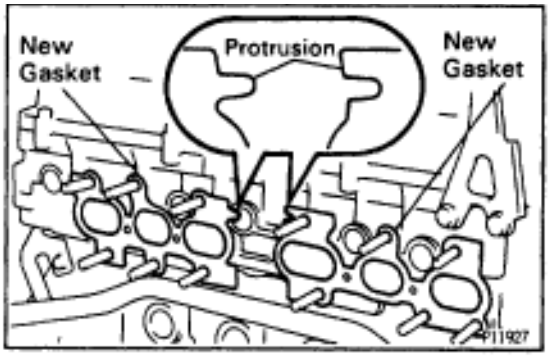

22. INSTALL EXHAUST MANIFOLD

(a) Place 2 new gaskets to the cylinder head facing the protrusion as shown.

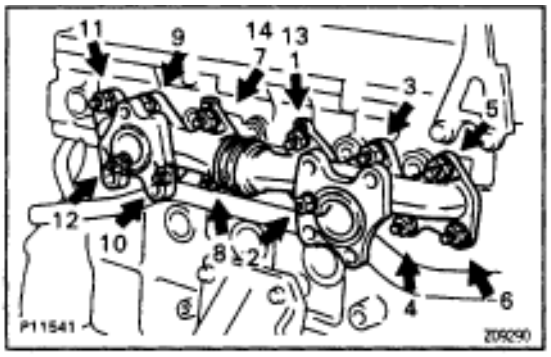

(b) Install the exhaust manifold with 12 new nuts, in several passes, in the sequence shown.
Torque: 39 N·m (400 kgf·cm, 29 ft·lbf)

23. INSTALL TURBOCHARGER
(See turbocharger installation in Turbocharger System)

CYLINDER BLOCK
COMPONENTS FOR ENGINE REMOVAL AND INSTALLATION

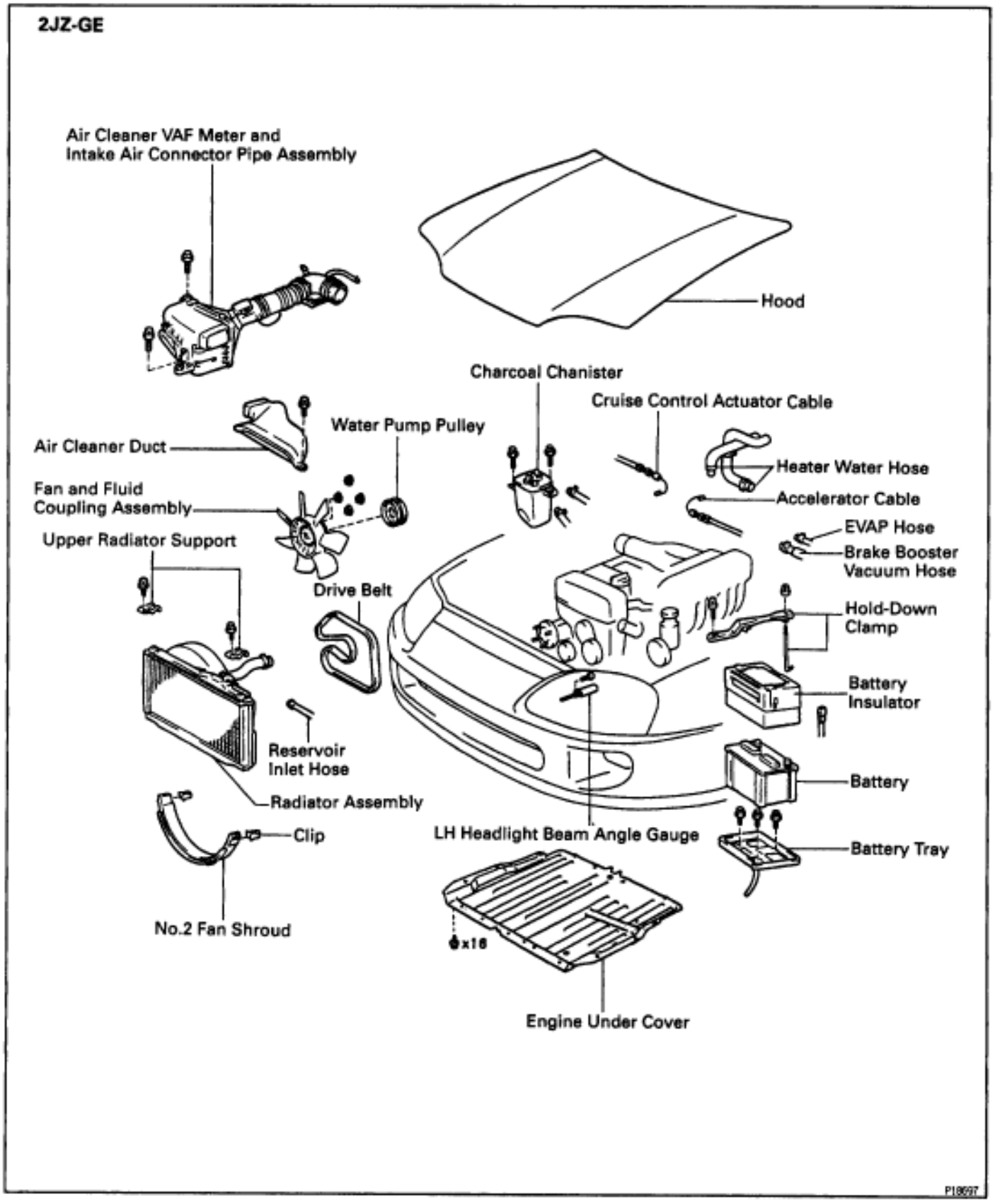

2JZ-GE

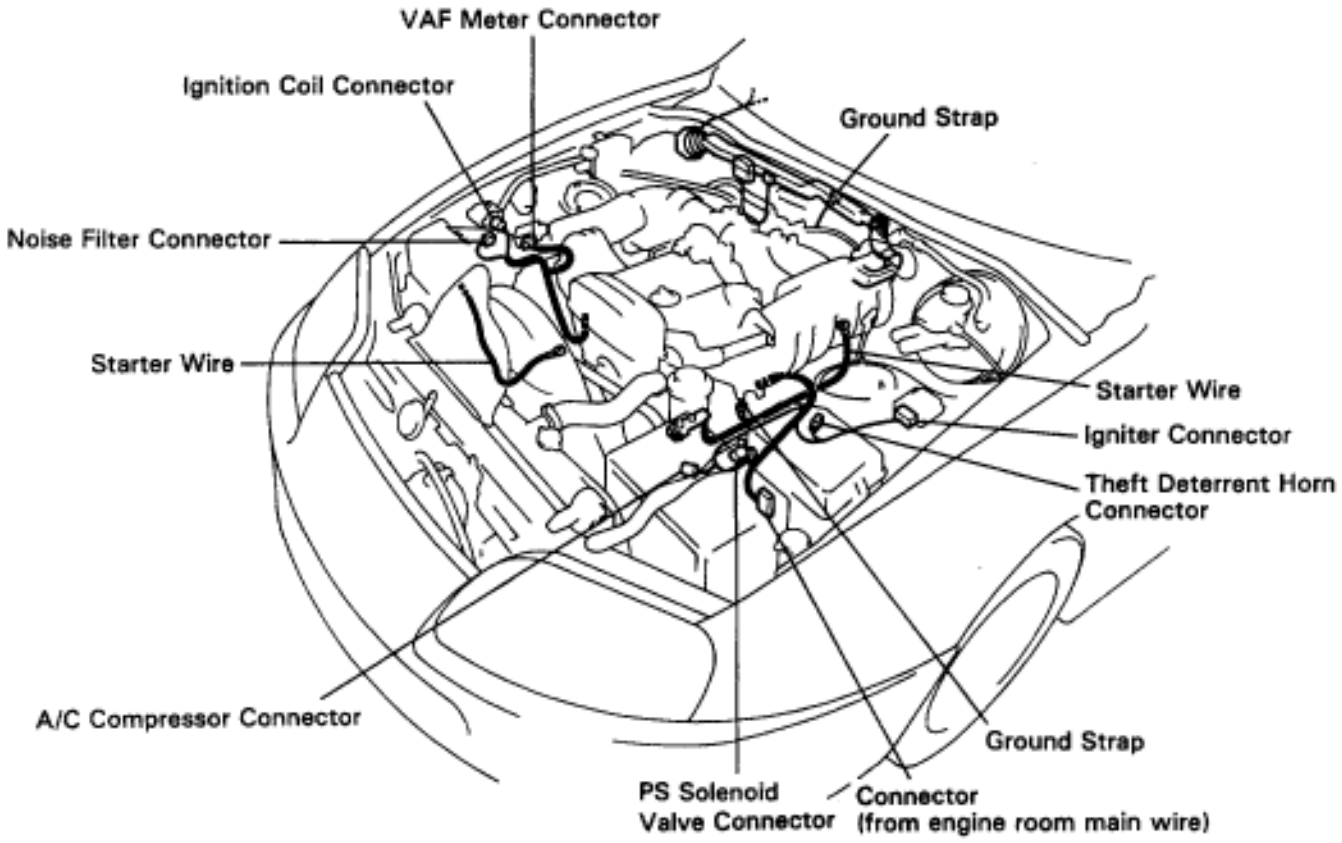

P13077

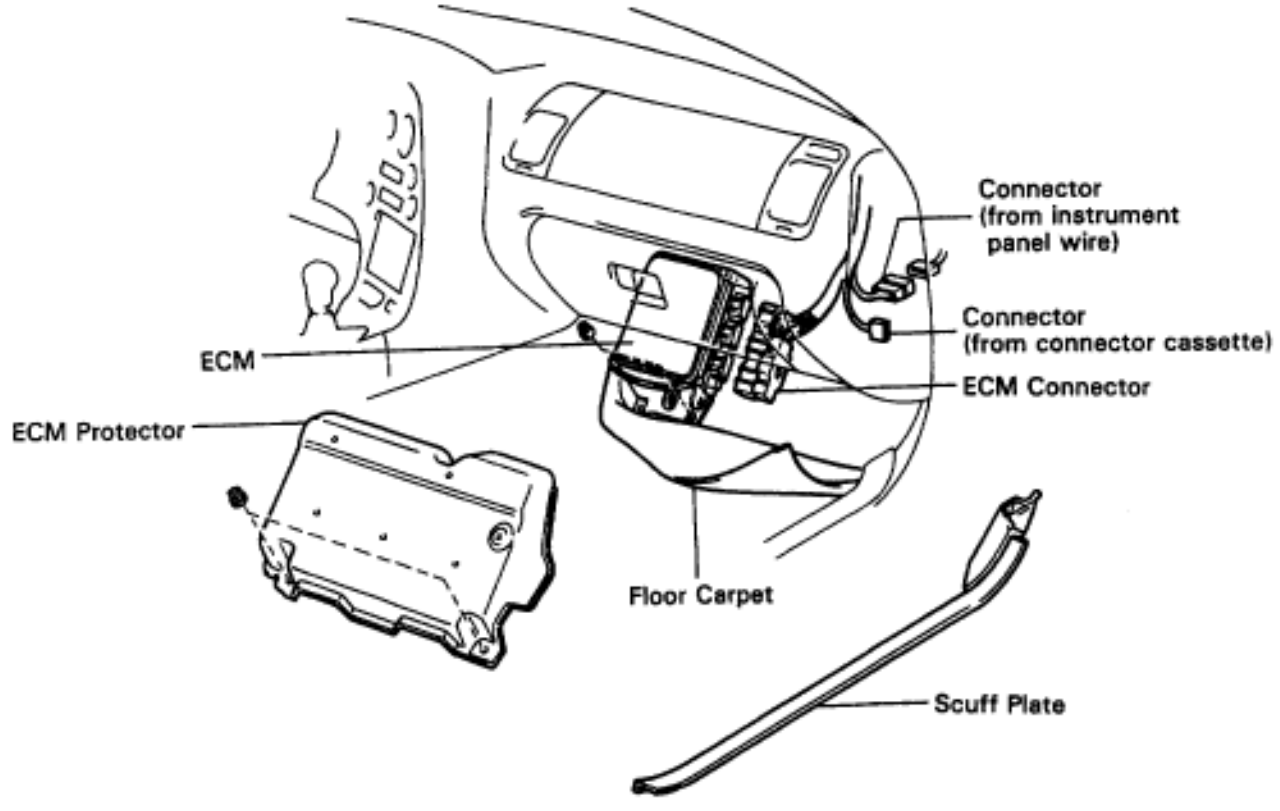

P13166

2JZ-GE

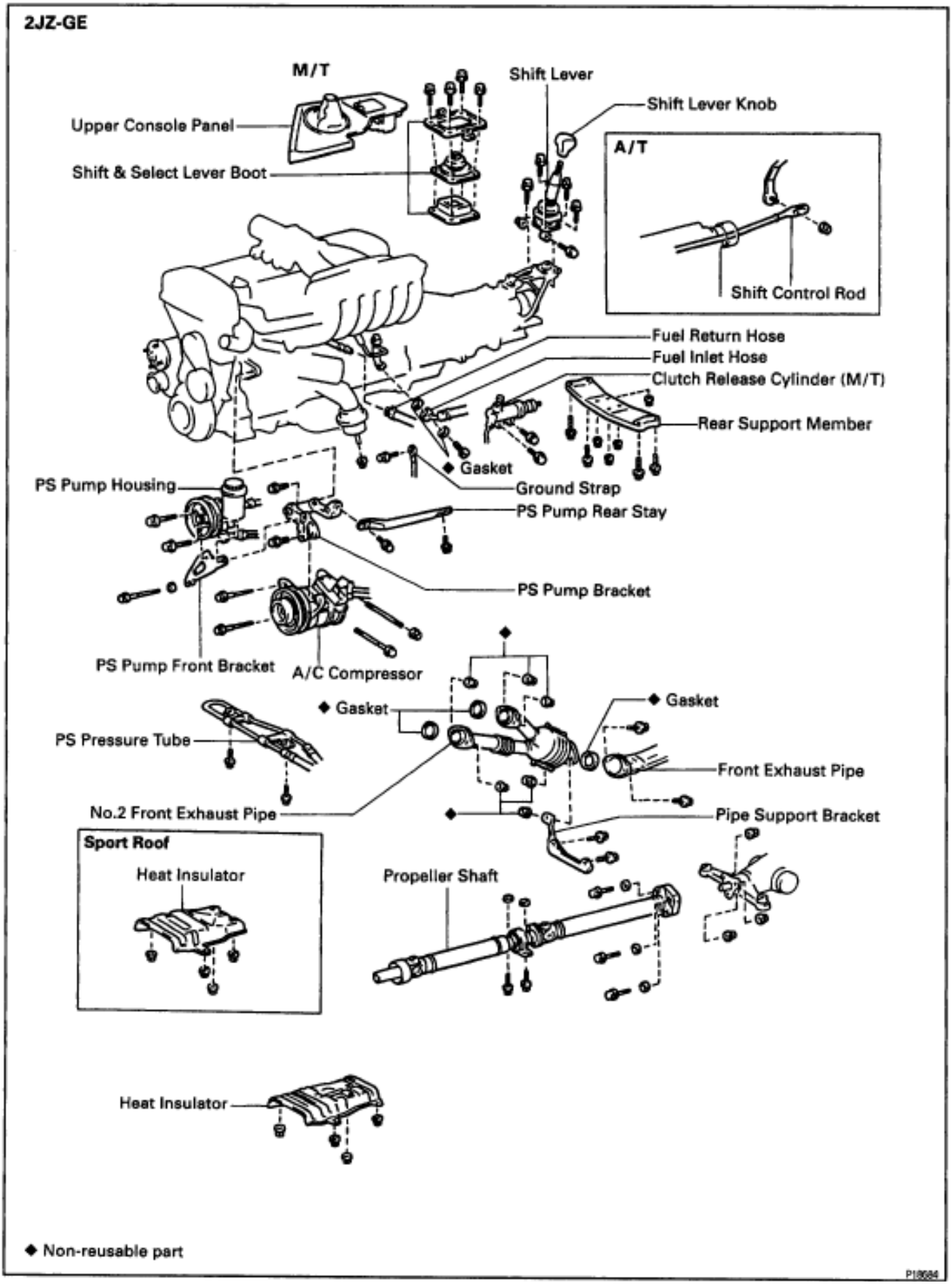
M/T
Shift Lever
Shift Lever Knob
Upper Console Panel
Shift & Select Lever Boot
A/T
Shift Control Rod
Fuel Return Hose
Fuel Inlet Hose
Clutch Release Cylinder (M/T)
Rear Support Member
◆ Gasket
Ground Strap
PS Pump Housing
PS Pump Rear Stay
PS Pump Bracket
PS Pump Front Bracket
A/C Compressor
◆ Gasket
◆ Gasket
PS Pressure Tube
Front Exhaust Pipe
No.2 Front Exhaust Pipe
Pipe Support Bracket
Sport Roof
Heat Insulator
Propeller Shaft
Heat Insulator
◆ Non-reusable part
P18684

2JZ-GTE

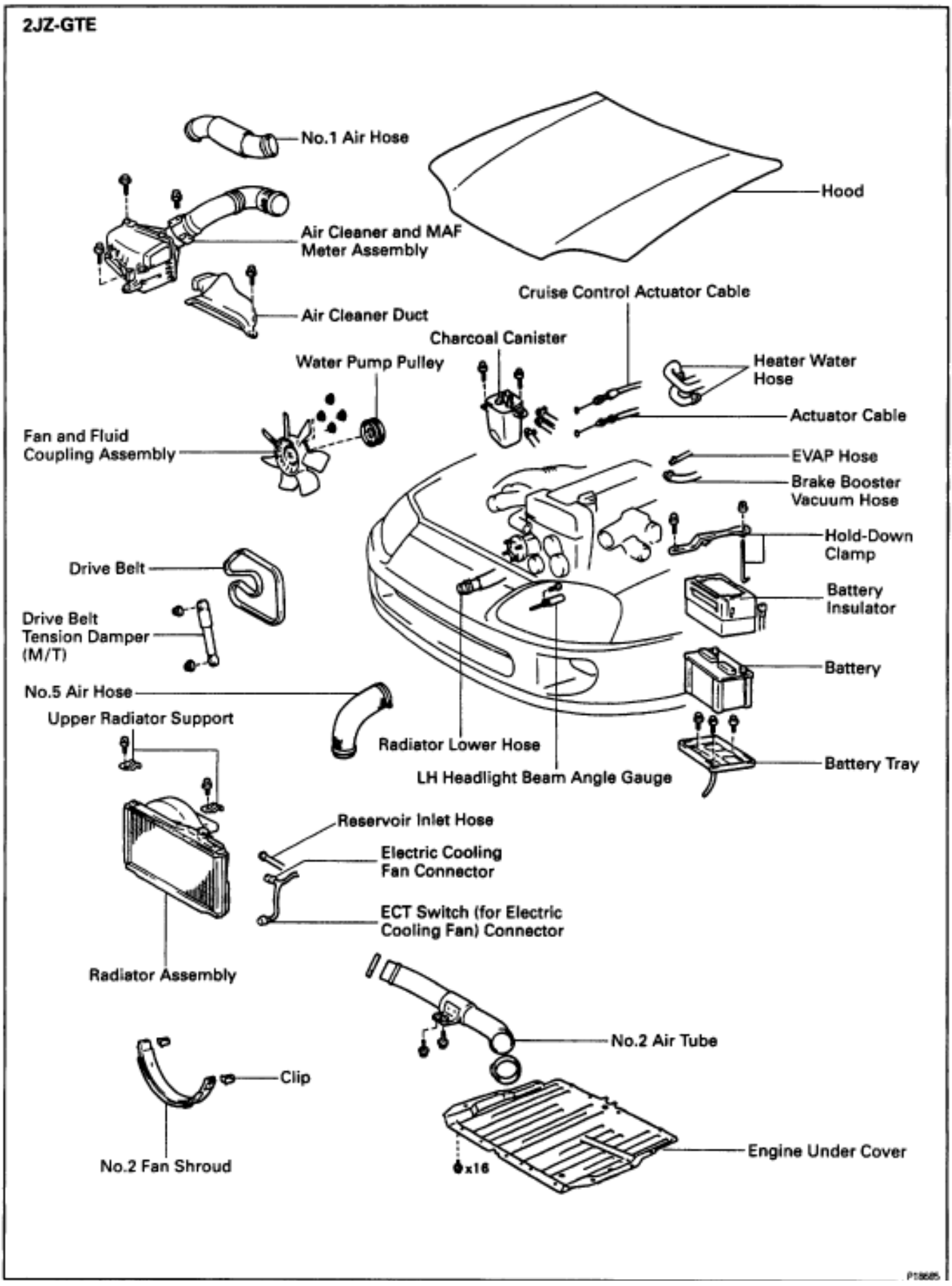
No.1 Air Hose
Hood
Air Cleaner and MAF Meter Assembly
Air Cleaner Duct
Cruise Control Actuator Cable
Charcoal Canister
Water Pump Pulley
Heater Water Hose
Actuator Cable
Fan and Fluid Coupling Assembly
EVAP Hose
Brake Booster Vacuum Hose
Hold-Down Clamp
Drive Belt
Battery Insulator
Drive Belt Tension Damper (M/T)
Battery
No.5 Air Hose
Upper Radiator Support
Radiator Lower Hose
LH Headlight Beam Angle Gauge
Battery Tray
Reservoir Inlet Hose
Electric Cooling Fan Connector
ECT Switch (for Electric Cooling Fan) Connector
Radiator Assembly
No.2 Air Tube
Clip
No.2 Fan Shroud
x16
Engine Under Cover

2JZ-GTE

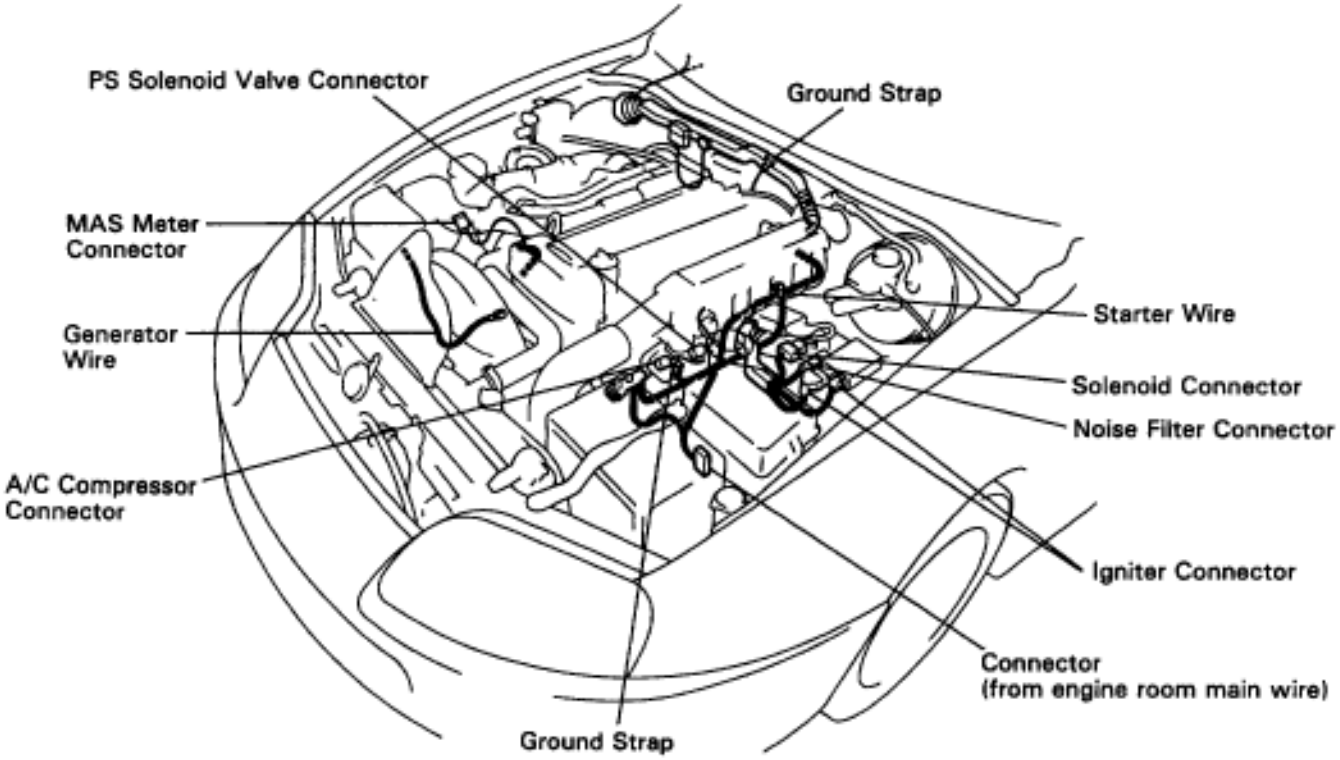
PS Solenoid Valve Connector
Ground Strap
MAS Meter Connector
Starter Wire
Generator Wire
Solenoid Connector
Noise Filter Connector
A/C Compressor Connector
Igniter Connector
Connector (from engine room main wire)
Ground Strap
P13078

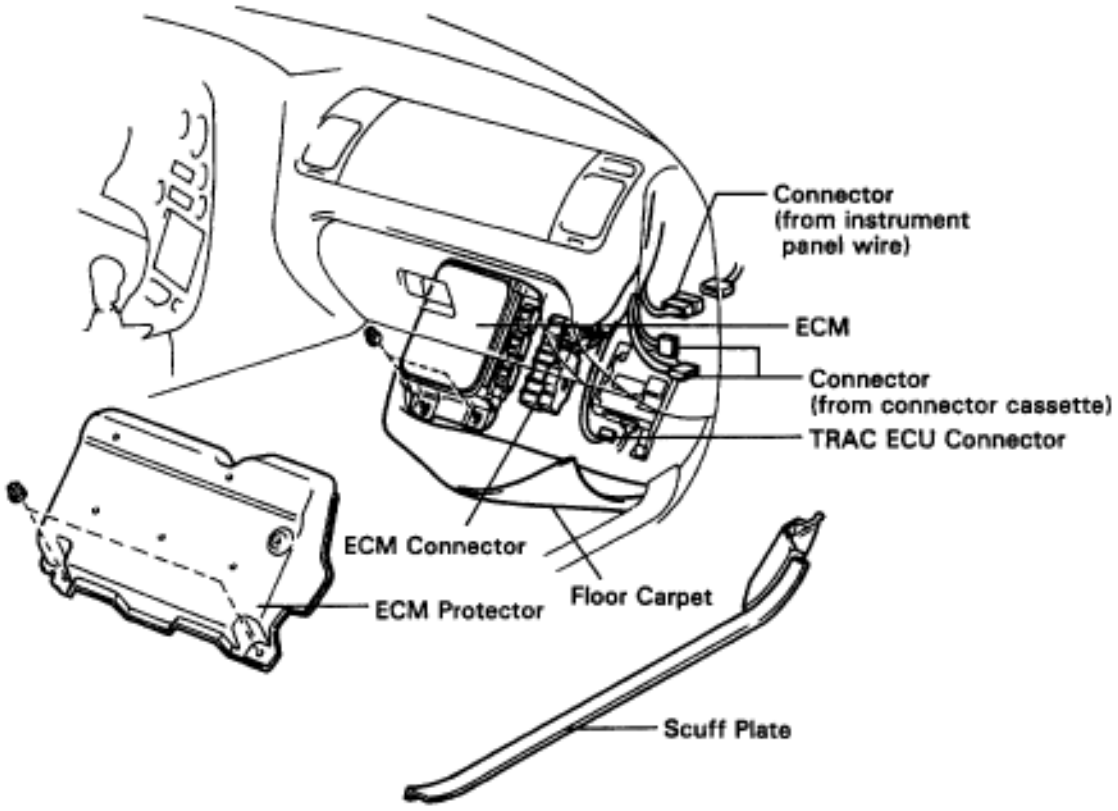
Connector (from instrument panel wire)
ECM
Connector (from connector cassette)
TRAC ECU Connector
ECM Connector
ECM Protector
Floor Carpet
Scuff Plate
P13187

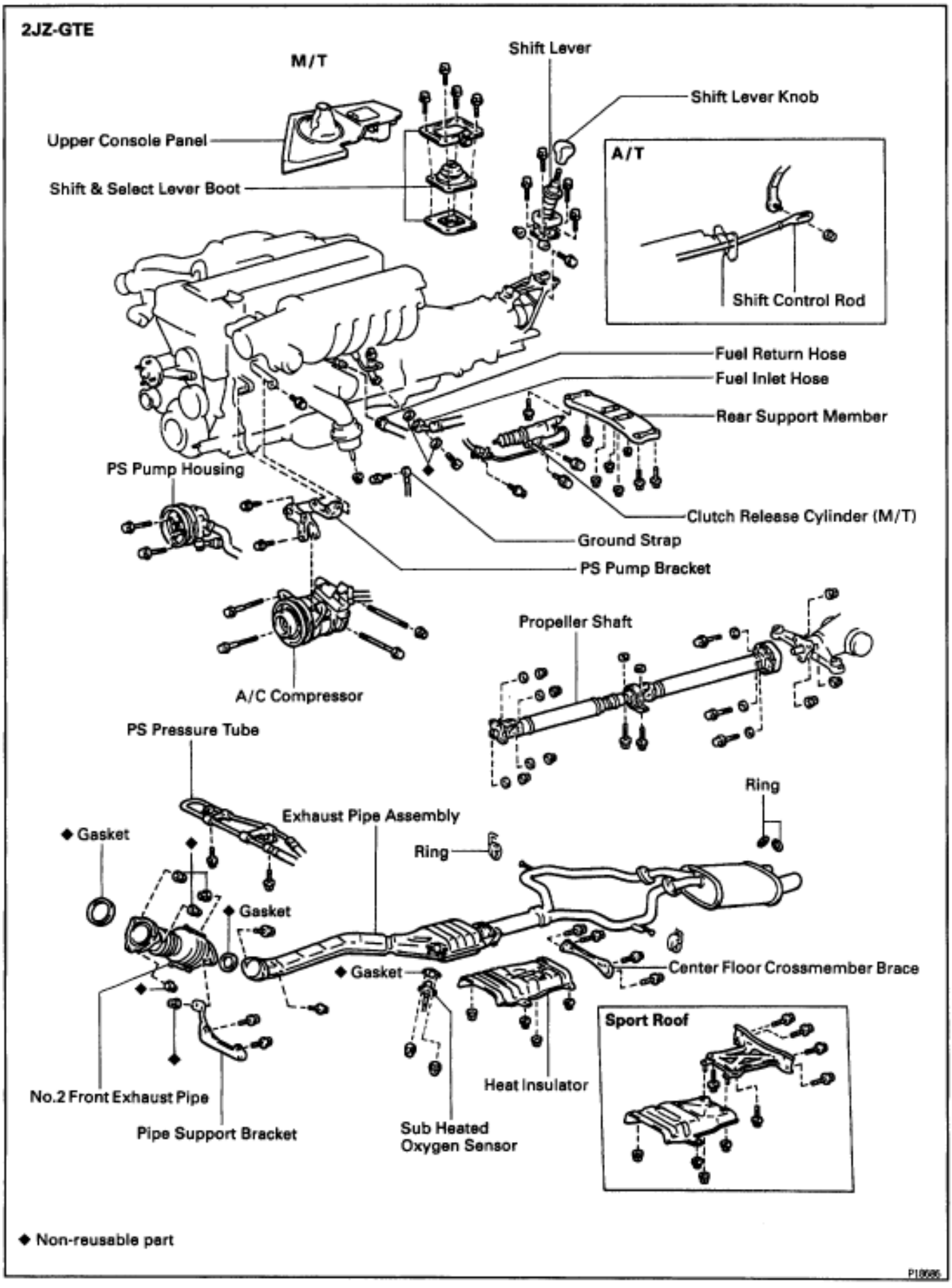
2JZ-GTE
M/T
Shift Lever
Shift Lever Knob
Upper Console Panel
Shift & Select Lever Boot
A/T
Shift Control Rod
Fuel Return Hose
Fuel Inlet Hose
Rear Support Member
PS Pump Housing
Clutch Release Cylinder (M/T)
Ground Strap
PS Pump Bracket
A/C Compressor
Propeller Shaft
PS Pressure Tube
Ring
Exhaust Pipe Assembly
◆ Gasket
Ring
◆ Gasket
◆ Gasket
Center Floor Crossmember Brace
Sport Roof
No.2 Front Exhaust Pipe
Pipe Support Bracket
Sub Heated Oxygen Sensor
Heat Insulator
◆ Non-reusable part
P10686

ENGINE REMOVAL (2JZ–GE)

1. REMOVE HOOD

2. REMOVE RADIATOR ASSEMBLY
(See radiator removal in Cooling System)

3. DRAIN ENGINE OIL

4. DRAIN FUEL FROM FUEL TANK

5. DISCONNECT CONTROL CABLES FROM THROTTLE BODY

Disconnect these cables:

- Accelerator cable
- Cruise control actuator cable

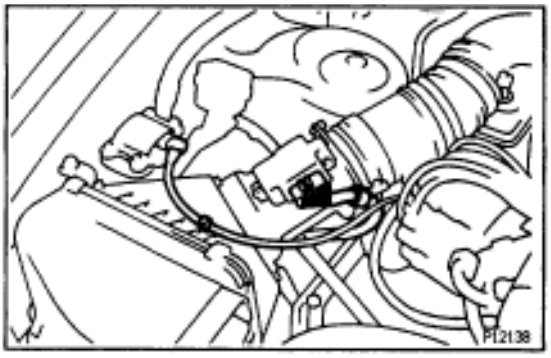

6. REMOVE AIR CLEANER, VAF METER AND INTAKE AIR CONNECTOR PIPE ASSEMBLY

(a) Disconnect the high–tension cord from the ignition coil.
(b) Disconnect the high–tension cord from the clamp on the air cleaner.
(c) Disconnect the VAF meter connector.
(d) Disconnect the engine wire from the VAF meter.
(e) Disconnect these hoses:
  (1) PS air hose from No.4 timing belt cover
  (2) PCV hose from No.2 cylinder head cover
(f) Loosen the hose clamp bolt holding the intake air connector pipe to the throttle body.
(g) Remove the 3 bolts, air cleaner, VAF meter and intake air connector pipe assembly.

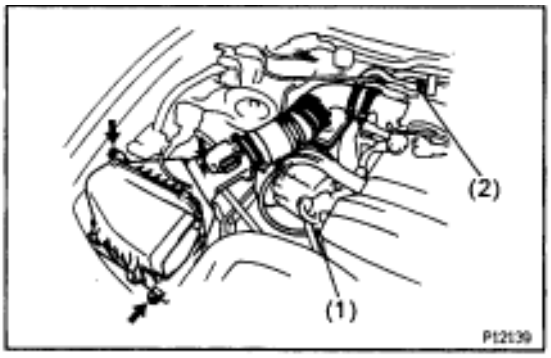

7. REMOVE DRIVE BELT, FAN, FLUID COUPLING ASSEMBLY AND WATER PUMP PULLEY
(See step 6 in water pump removal in Cooling System)

8. REMOVE CHARCOAL CANISTER

9. DISCONNECT HEATER WATER HOSES

10. DISCONNECT BRAKE BOOSTER VACUUM HOSE

11. DISCONNECT EVAP HOSE

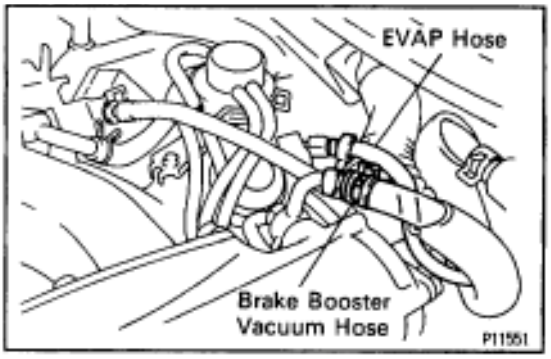

12. DISCONNECT WIRES AND CONNECTORS

(a) Disconnect the noise filter connector.
(b) Disconnect the ignition coil connector.
(c) Disconnect the engine wire from the wire clamp.

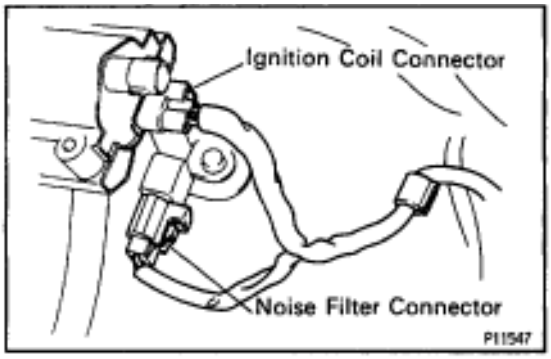

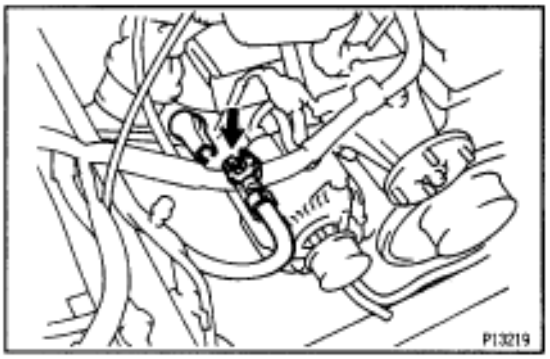

(d) Remove the rubber cap and nut, and disconnect the generator wire.

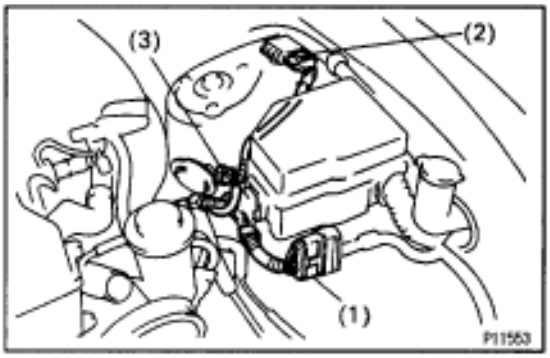

(e) Disconnect these connectors:
(1) Connector from engine room main wire
(2) Igniter connector
(3) Theft deterrent horn connector

(f) Disconnect the engine wire from the 2 wire clamps.

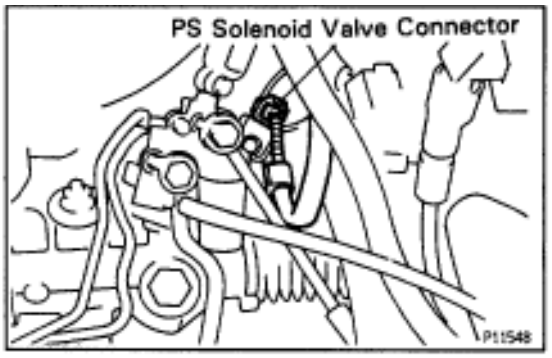

(g) Disconnect the wire clamp and PS solenoid valve connector.

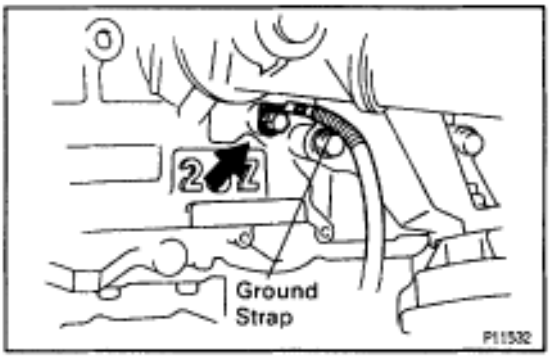

(h) Remove the bolt, and disconnect the ground strap from the cylinder block.

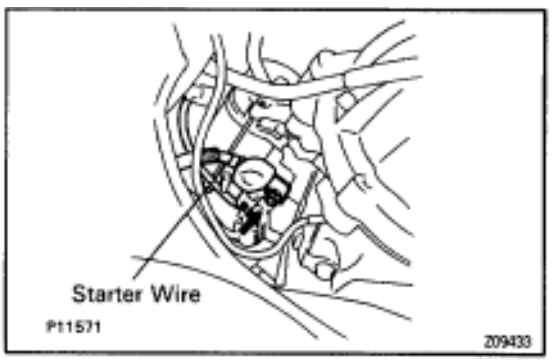

(i) Remove the rubber cap and nut, and disconnect the starter wire.

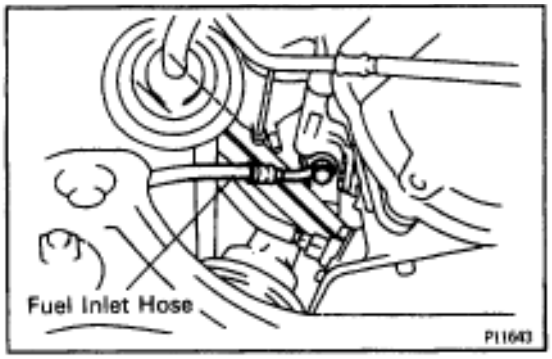

13. DISCONNECT FUEL HOSES

(a) Remove the union bolt and 2 gaskets, disconnect the fuel inlet hose.
HINT:
- Put a suitable container or shop rag under the fuel pipe support.
- Slowly loosen the union bolt.

(b) Suspend the hose union end upward.

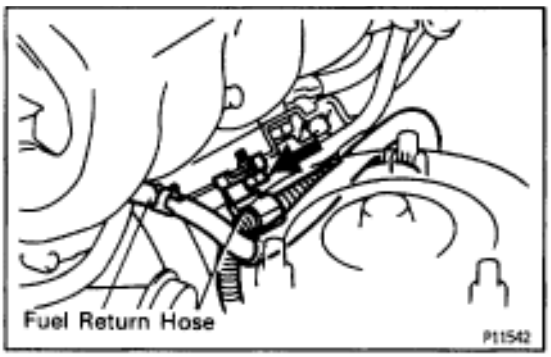

(c) Disconnect the fuel return hose from the oil dipstick guide.
(d) Disconnect the fuel return hose from the fuel return hose. Plug the hose end.

14. REMOVE ENGINE WIRE BRACKET

Remove the bolt and bracket, and disconnect the engine wire from the intake manifold stay.

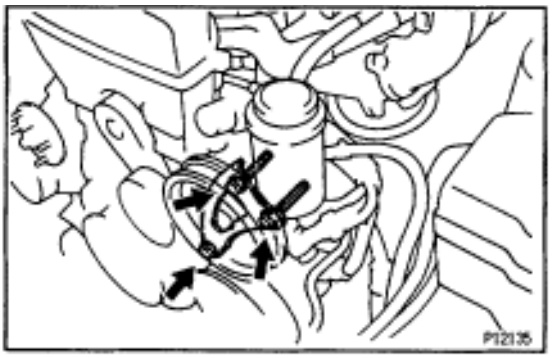

15. DISCONNECT PS PUMP WITHOUT DISCONNECTING HOSES

(a) Remove the 3 bolts, plate washer and pump front bracket.

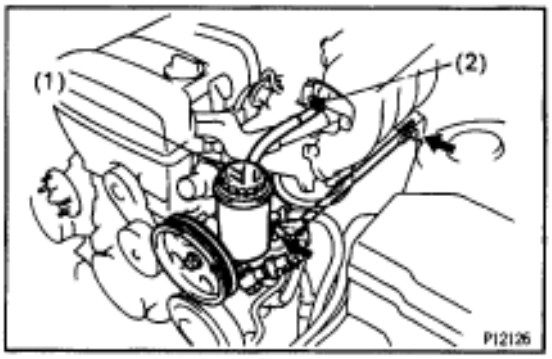

(b) Disconnect these hoses:
(1) Air hose from No.4 timing belt cover
(2) Air hose from air intake chamber

(c) Disconnect the pump housing from the pump bracket.
HINT: Put aside the pump housing, and suspend it.

(d) Remove the 2 bolts and pump rear stay.

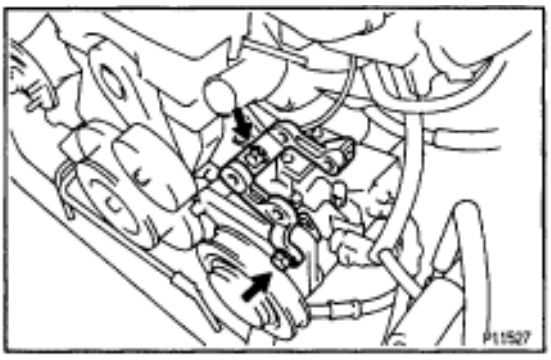

(e) Remove the 2 bolts and pump bracket.

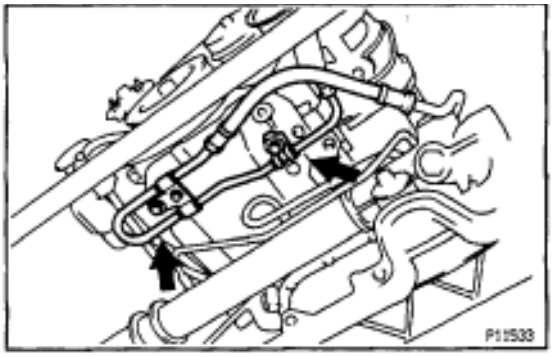

16. DISCONNECT PS PRESSURE TUBE FROM ENGINE

Remove the 2 clamp bolts, and disconnect the pressure tube.

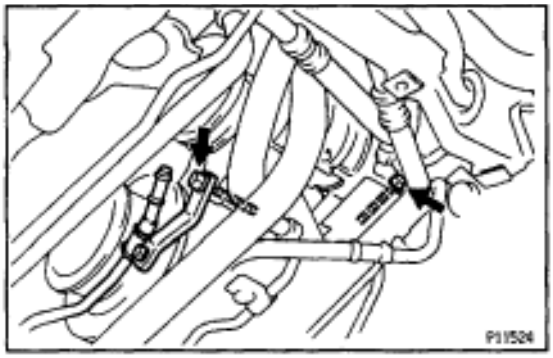

17. DISCONNECT A/C COMPRESSOR WITHOUT DISCONNECTING HOSES

(a) Remove the 2 bolts.

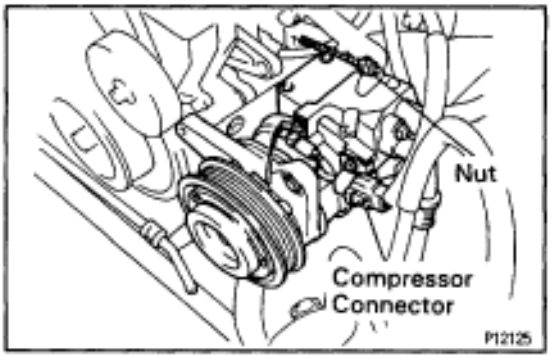

(b) Disconnect the compressor connector.
(c) Remove the nut.
(d) Using a torx socket (E10), remove the stud bolt, and disconnect the compressor from the engine.
HINT: Put aside the compressor, and suspend it securely.

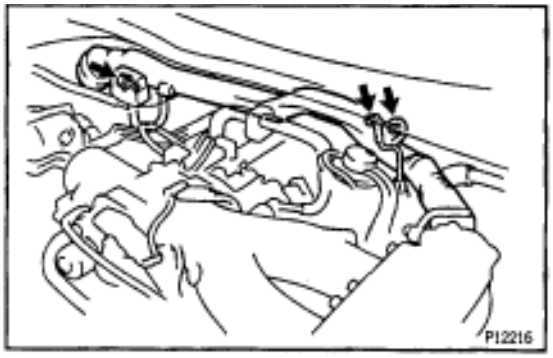

18. DISCONNECT ENGINE WIRE FROM COWL PANEL

(a) Remove the bolt, and disconnect the ground strap.
(b) Remove the 2 bolt, and disconnect the engine wire protector.

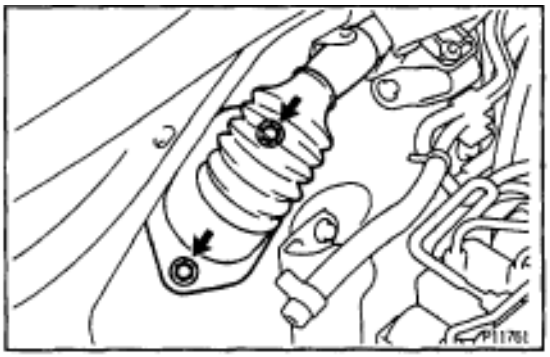

(c) Remove the 2 bolts holding the engine wire retainer to the cowl panel.

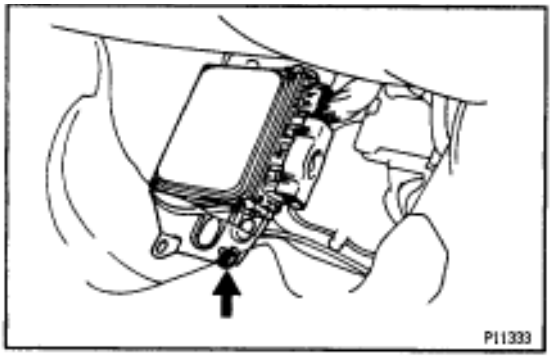

19. DISCONNECT ENGINE WIRE FROM CABIN

(a) Remove the scuff plate.
(b) Take out the front side of the floor carpet.
(c) Remove the 2 nuts and ECM protector.
(d) Remove the nut, and disconnect the ECM from the floor panel.

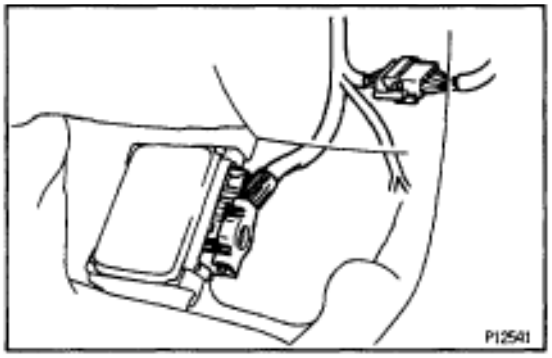

(e) Disconnect the 2 connectors from the ECM.
(f) Disconnect the connector from the instrument panel wire.



(g) Disconnect the connector from the connector cassette.

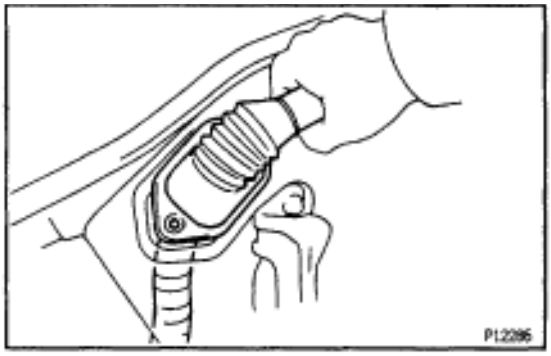

(h) Pull out the engine wire from the cabin.

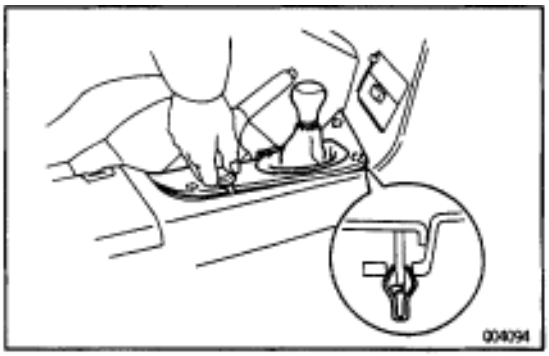

20. M/T:
REMOVE UPPER CONSOLE PANEL, SHIFT LEVER BOOTS AND HOLDING BOLTS

(a) Remove the shift lever knob.
(b) Using a screwdriver, pry out the upper console panel.

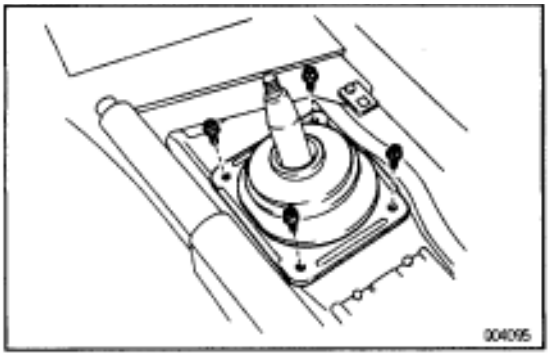

(c) Remove the 4 bolts holding the lever boot to the transmission cover.
(d) Remove the shift and select lever boots.

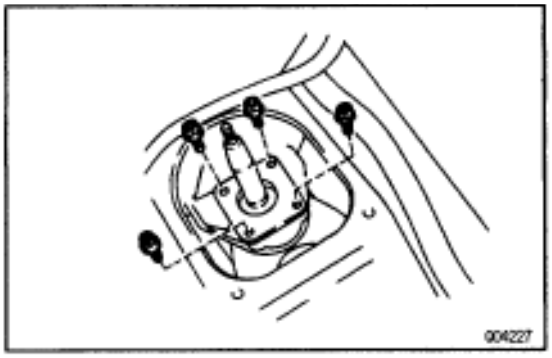

(e) Remove the 4 bolts holding the shift lever to the shift lever retainer.

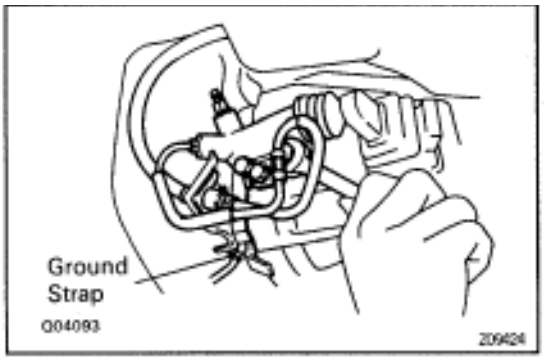

21. M/T:
DISCONNECT CLUTCH RELEASE CYLINDER AND GROUND STRAP FROM TRANSMISSION
(a) Remove the 2 bolts and clutch release cylinder.
(b) Remove the bolt, and disconnect the ground strap.



22. REMOVE NO.2 EXHAUST PIPE
(a) Remove the 2 bolts and nuts holding the No.2 front exhaust pipe to the front exhaust pipe.
(b) Remove the 2 bolts and pipe support bracket.
(c) Remove the gasket, and disconnect the front exhaust pipe.



(d) Remove the 4 nuts, No.2 front exhaust pipe and 2 gaskets.
23. REMOVE EXHAUST PIPE HEAT INSULATOR
24. REMOVE PROPELLER SHAFT
(See propeller shaft removal in Propeller Shaft)

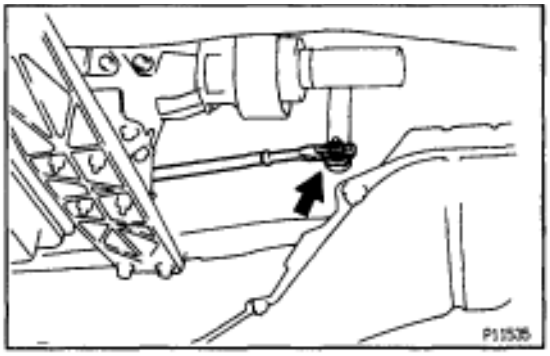

25. A/T:
DISCONNECT TRANSMISSION CONTROL ROD
Remove the nut, and disconnect the control rod from the shift lever.

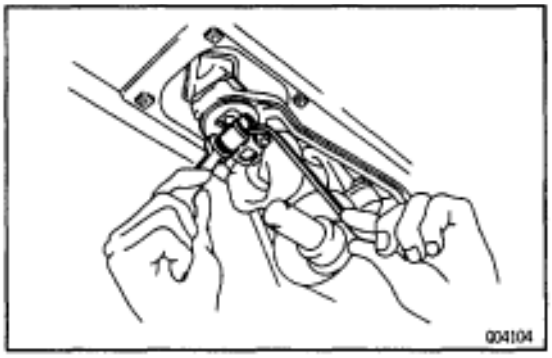

26. M/T:
REMOVE TRANSMISSION SHIFT LEVER
(a) Remove the bolt and nut.
(b) Remove the transmission shift lever, inside of vehicle.

27. PLACE JACK UNDER TRANSMISSION
NOTICE (A/T): Be sure to put a wooden block between the jack and the transmission oil pan to prevent damage.

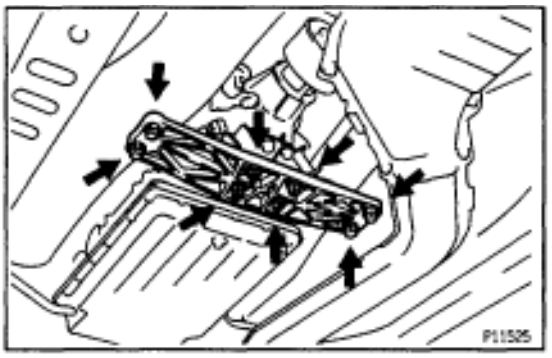

28. REMOVE REAR SUPPORT MEMBER
(a) Remove the 4 nuts holding the member to the engine rear mounting insulator.
(b) Remove the 4 bolts and rear support member.

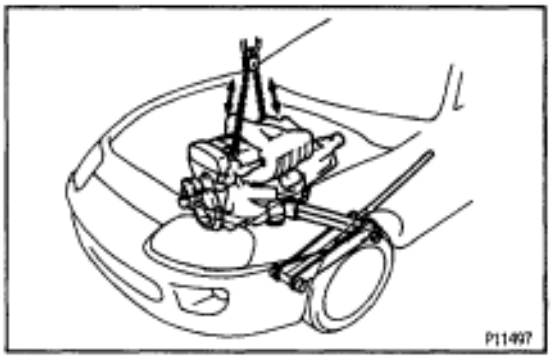

29. REMOVE ENGINE AND TRANSMISSION ASSEMBLY FROM VEHICLE
(a) Attach the engine hoist chain to the 2 engine hangers.

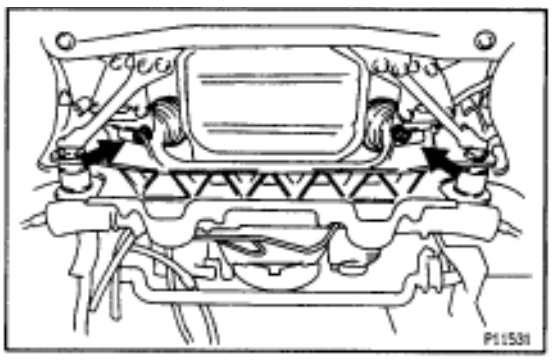

(b) Remove the 2 nuts holding the engine front mounting insulators to the front suspension crossmember.

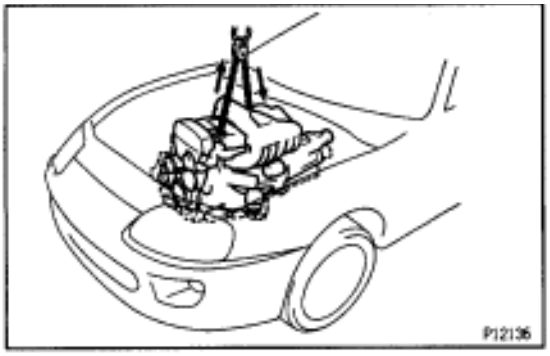

(c) Lift the engine out of the vehicle slowly and carefully.
NOTICE: Remove the engine and transmission assembly carefully without damaging the shift lever retainer (M/ T), A/C compressor or PS solenoid valve.
(d) Make sure the engine is clear of all wiring, hoses and cables.
(e) Place the engine and transmission assembly onto the stand.

ENGINE REMOVAL (2JZ–GTE)

1. REMOVE HOOD
2. REMOVE RADIATOR ASSEMBLY
(See radiator removal in Cooling System)
3. DRAIN ENGINE OIL
4. DRAIN FUEL FROM FUEL TANK
5. REMOVE NO.1 AIR HOSE
6. DISCONNECT CONTROL CABLES FROM THROTTLE BODY

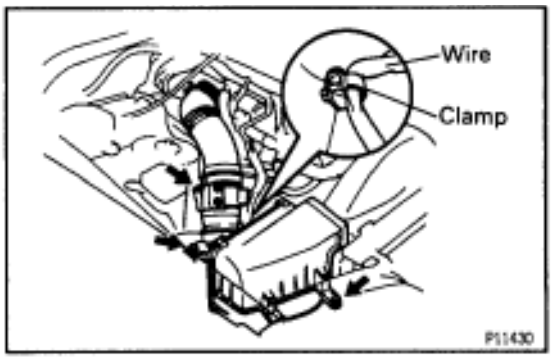

Disconnect these cables:
- Accelerator cable
- Cruise control actuator cable

7. REMOVE AIR CLEANER AND MAF METER ASSEMBLY
(a) Remove the 3 bolts.
(b) Loosen the hose clamp, disconnect the air hose from the intake air connector.
(c) Disconnect the MAF meter wire from the clamp on the air cleaner case.
(d) Disconnect the MAF meter connector, and remove the air cleaner and MAF meter assembly.
8. M/T:
REMOVE DRIVE BELT TENSIONER DAMPER
(See step 2 in timing belt removal)
9. REMOVE DRIVE BELT, FAN, FLUID COUPLING ASSEMBLY AND WATER PUMP PULLEY
(See step 6 in water pump removal in Cooling System)
10. REMOVE CHARCOAL CANISTER

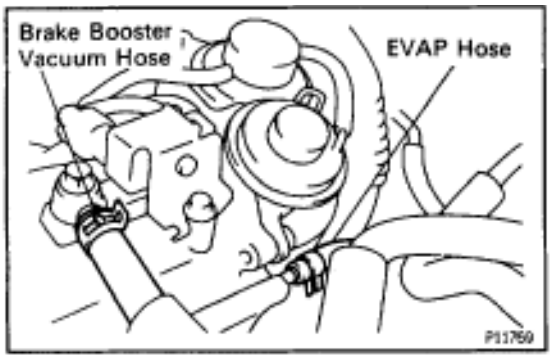

11. DISCONNECT HEATER WATER HOSES
12. DISCONNECT BRAKE BOOSTER VACUUM HOSE
13. DISCONNECT EVAP HOSE

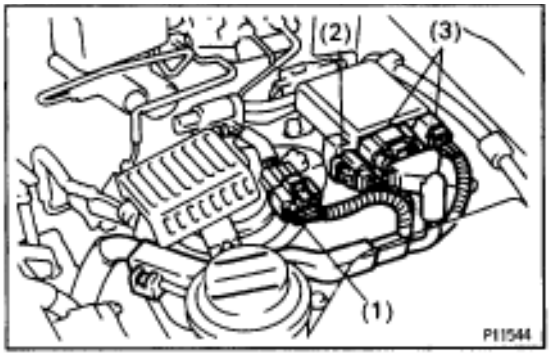

14. DISCONNECT WIRES AND CONNECTORS

(a) Disconnect these connectors:
  (1) Solenoid resistor connector
  (2) Noise filter connector
  (3) Igniter connectors

(b) Disconnect the engine wire from the PS reservoir tank protector.

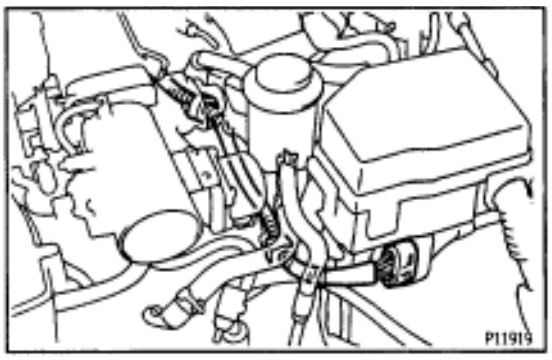

(c) Disconnect the connector from the engine room main wire.

(d) Disconnect the engine wire from the 2 wire clamps.

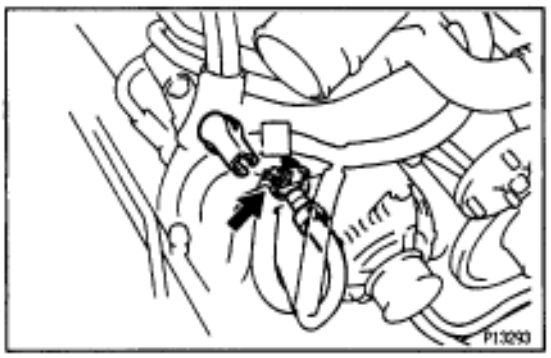

(e) Remove the rubber cap and nut, and disconnect the generator wire.

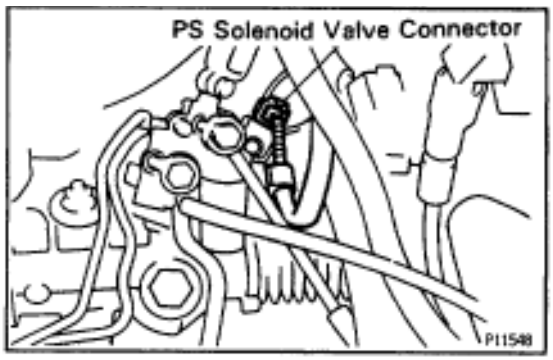

(f) Disconnect the wire clamp and PS solenoid valve connector.

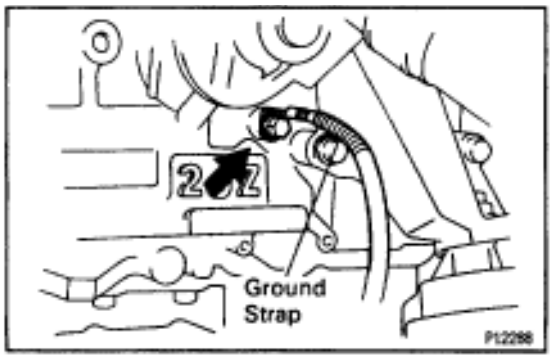

(g) Remove the bolt and disconnect the ground strap from the cylinder block.

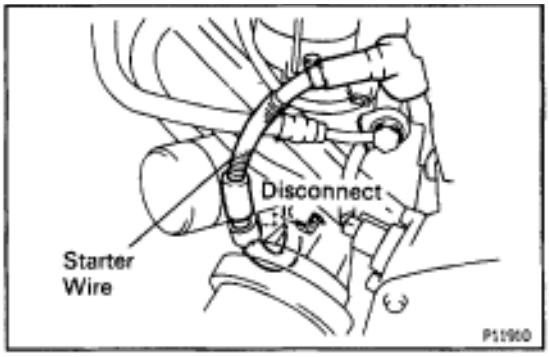

(h) Disconnect the starter wire from the LH engine mounting bracket.
(i) Remove the rubber cap and nut, and disconnect the starter wire.

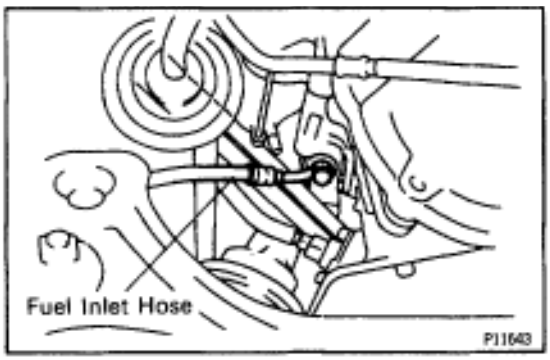

15. DISCONNECT FUEL HOSES

(a) Remove the union bolt and 2 gaskets, and disconnect the fuel inlet hose.
HINT:
- Put a suitable container or shop rag under the fuel pipe support.
- Slowly loosen the union bolt.

(b) Suspend the hose union end upward.

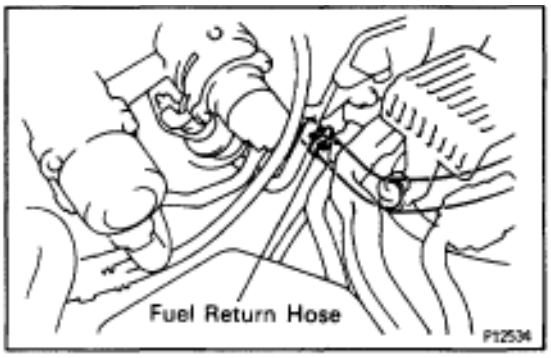

(c) Disconnect the fuel return hose from the clamp of the dipstick guide.
(d) Disconnect the fuel return hose from the fuel return pipe. Plug the hose end.

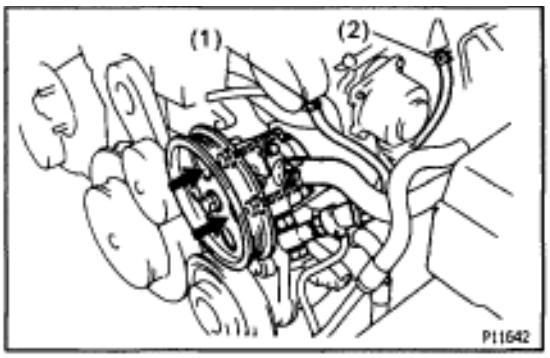

16. DISCONNECT PS PUMP WITHOUT DISCONNECTING HOSES

(a) Disconnect these hoses:
(1) Air hose from throttle body
(2) Air hose from air intake chamber

(b) Remove the 2 bolts, and disconnect the pump housing from the pump bracket.
HINT: Put aside the pump housing, and suspend it securely.

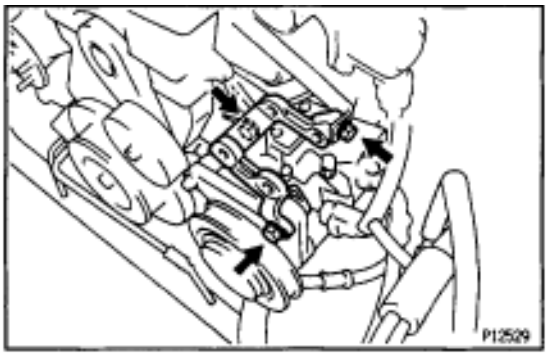

(c) Remove the 3 bolts and pump bracket.

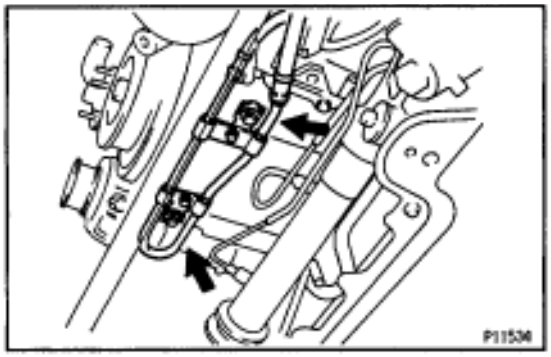

17. DISCONNECT PS PRESSURE TUBE FROM ENGINE

Remove the 2 clamp bolts and disconnect the pressure tube.

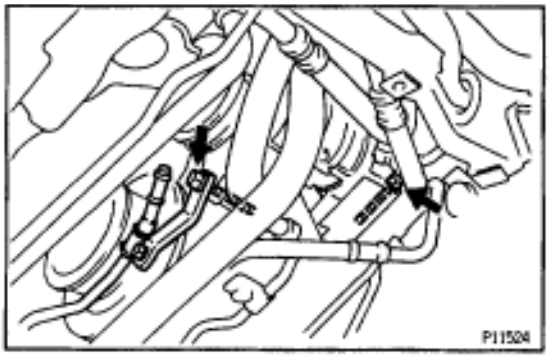

18. DISCONNECT A/C COMPRESSOR WITHOUT DISCONNECTING HOSES

(a) Remove the 2 bolts.

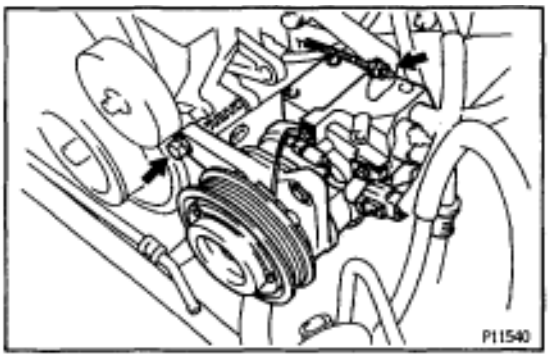

(b) Disconnect the compressor connector.
(c) Remove the bolt and nut.
(d) Using a torx socket (E10), remove the stud bolt, and disconnect the compressor from the engine.
HINT: Put aside the compressor, and suspend it securely.

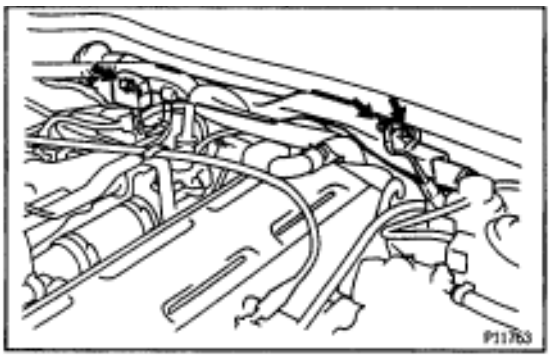

19. DISCONNECT ENGINE WIRE FROM COWL PANEL

(a) Remove the bolt, and disconnect the ground strap.
(b) Remove the 2 bolts, and disconnect the engine wire protector.

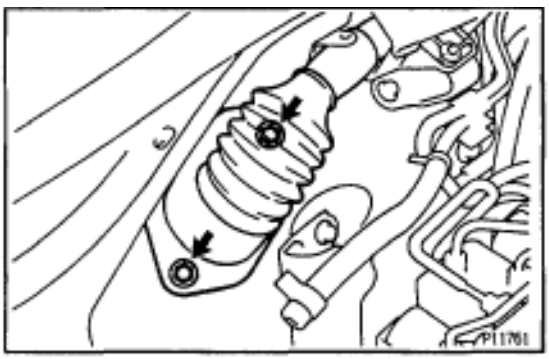

(c) Remove the 2 bolts holding the engine wire retainer to the cowl panel.

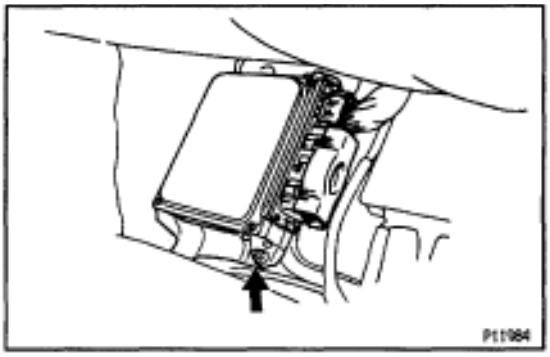

20. DISCONNECT ENGINE WIRE FROM CABIN

(a) Remove the scuff plate.
(b) Take out the front side of the floor carpet.
(c) Remove the 2 nuts and ECM protector.
(d) Remove the nut, and disconnect the ECM from the floor panel.

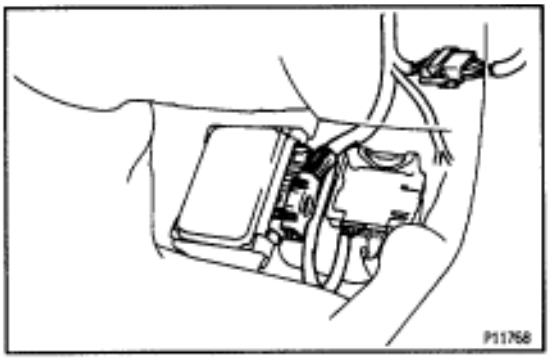

(e) Disconnect the 2 connectors from the ECM.
(f) Disconnect the connector from the TRAC ECU.
(g) Disconnect the connector from the instrument panel wire.

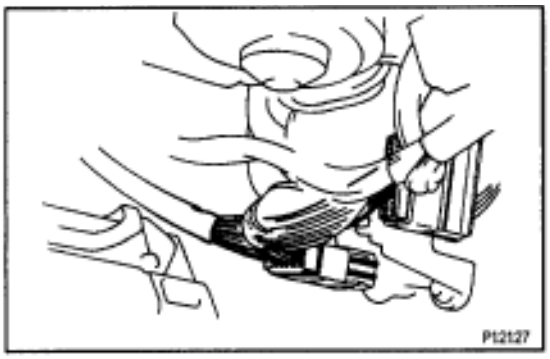

(h) Disconnect the connectors from the connector cassette.

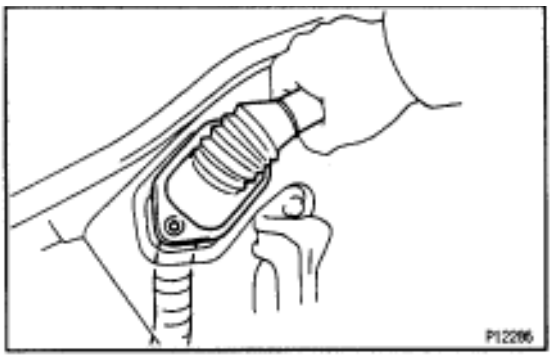

(j) Pull out the engine wire from the cabin.

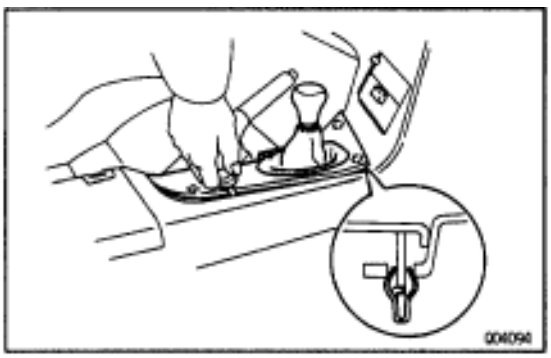

21. M/T:
REMOVE UPPER CONSOLE PANEL, SHIFT LEVER BOOTS AND HOLDING BOLTS

(a) Remove the shift lever knob.
(b) Using a screwdriver, pry out the upper console panel.

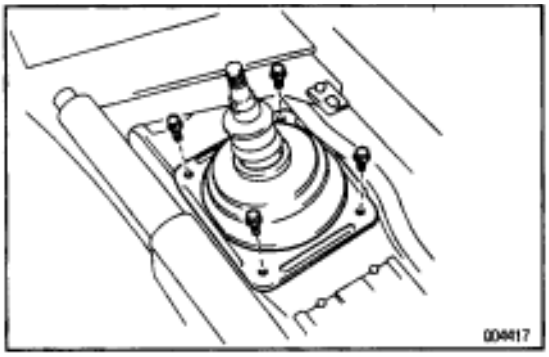

(c) Remove the 4 bolts holding the lever boot to the transmission cover.
(d) Remove the shift & select lever boots.

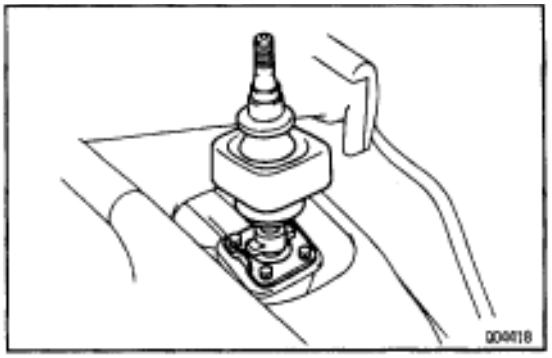

(e) Remove the 4 bolts holding the shift lever to the shift lever retainer.

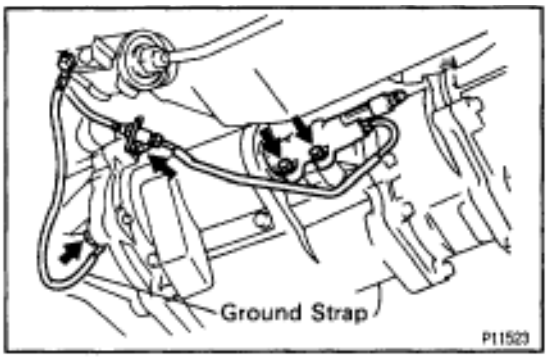

22. M/T:
DISCONNECT CLUTCH RELEASE CYLINDER AND GROUND STRAP FROM TRANSMISSION
(a) Remove the 2 bolts, and disconnect clutch release cylinder.
(b) Remove the bolt, and disconnect the clutch line tube.
(c) Remove the bolt, and disconnect ground strap.

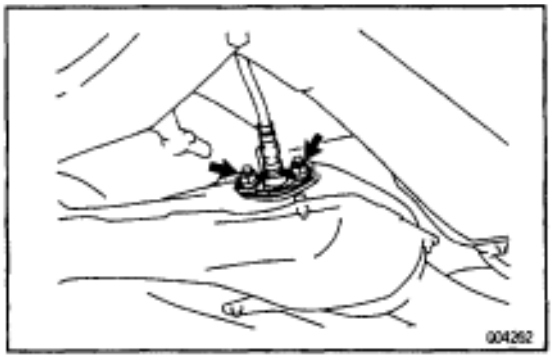

23. DISCONNECT SUB HEATED OXYGEN SENSOR FROM FRONT EXHAUST PIPE
Remove the 2 nuts and sensor cover, and disconnect oxygen sensor and gasket.

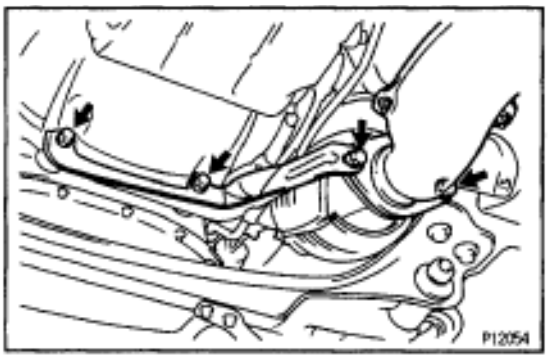

24. REMOVE EXHAUST PIPE ASSEMBLY
(a) Remove the 2 bolts and nuts holding the front exhaust pipe to the No.2 front exhaust pipe.
(b) Remove the 2 bolts and pipe support bracket.
(c) Remove the gasket, and disconnect the front exhaust pipe.

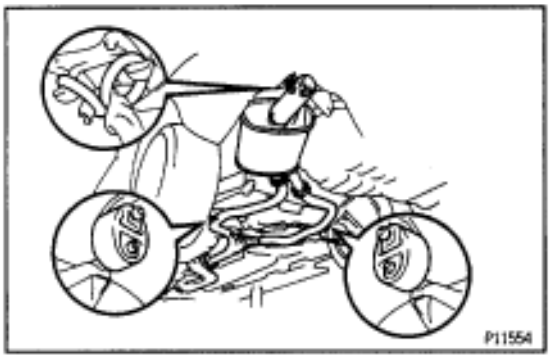

(d) Disconnect the hook of the tailpipe from the 2 rings.
(e) Disconnect the 2 rings on the exhaust pipe from the exhaust pipe brackets, and remove the exhaust pipe assembly.



25. REMOVE NO.2 FRONT EXHAUST PIPE
Remove the 3 nuts, front exhaust pipe and gasket.

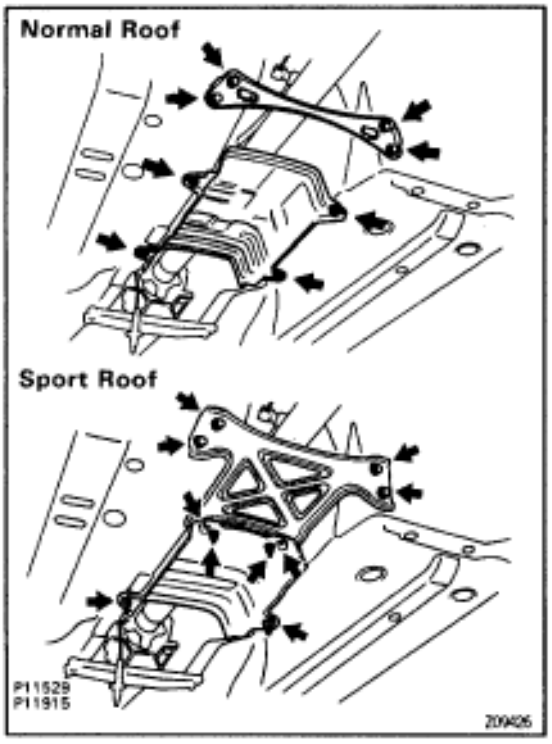

26. REMOVE EXHAUST PIPE HEAT INSULATOR
Remove the 4 nuts and heat insulator.

27. REMOVE REAR CENTER FLOOR CROSSMEMBER BRACE
Remove the 4 bolts (Normal roof) or 6 bolts (Sport Roof) and crossmember brace.

28. REMOVE PROPELLER SHAFT
(See propeller shaft removal in Propeller Shaft)

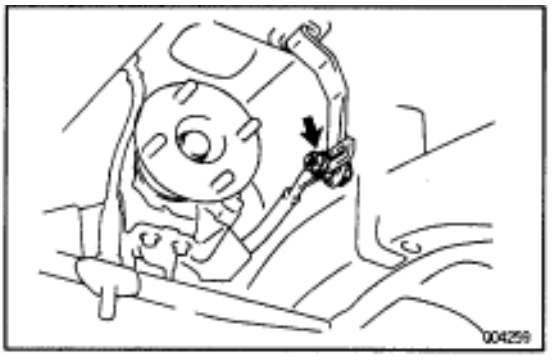

29. A/T:
DISCONNECT TRANSMISSION CONTROL ROD
Remove the nut, and disconnect the control rod from the shift lever.

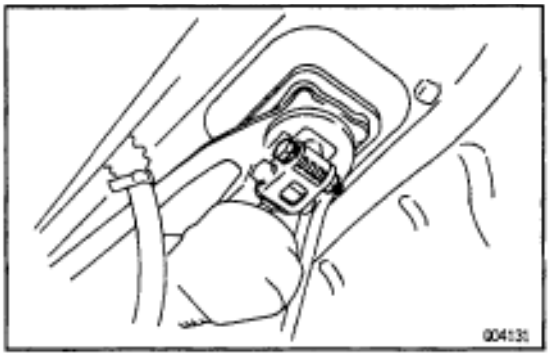

30. M/T:
REMOVE TRANSMISSION SHIFT LEVER

(a) Remove the bolt and nut.
(b) Remove the transmission shift lever, inside of vehicle.

31. PLACE JACK UNDER TRANSMISSION
NOTICE (A/T): Be sure to put a wooden block between the jack and the transmission oil pan to prevent damage.

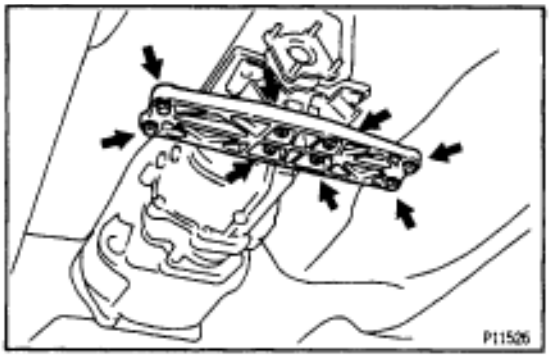

32. REMOVE REAR SUPPORT MEMBER

(a) Remove the 4 nuts holding the member to the engine rear mounting insulator.
(b) Remove the 4 bolts and rear support member.

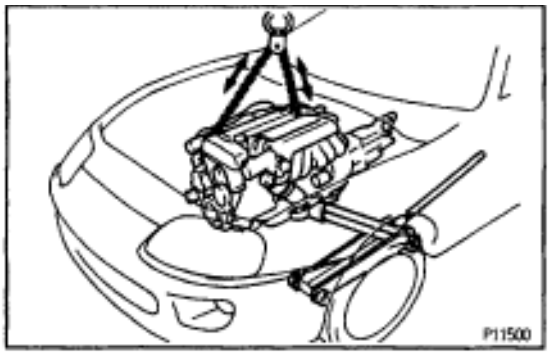

33. REMOVE ENGINE AND TRANSMISSION ASSEMBLY FROM VEHICLE

(a) Attach the engine hoist chain to the 2 engine hangers.

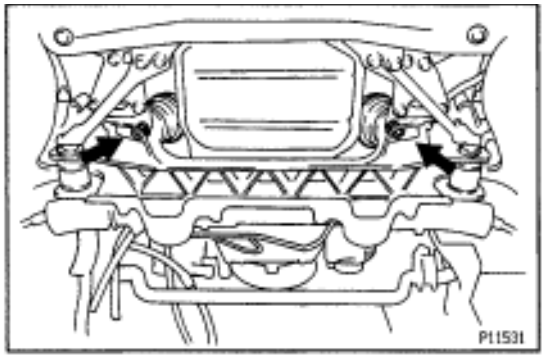

(b) Remove the 2 nuts holding the engine front mounting insulators to the front suspension crossmember.

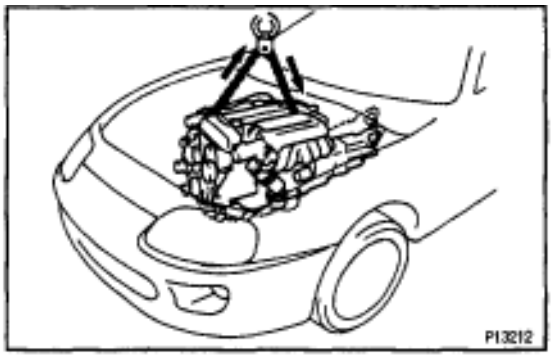

(c) Lift the engine out of the vehicle slowly and carefully.
NOTICE: Remove the engine and transmission assembly carefully without damaging the shift lever retainer (M/ T), A/C compressor or PS solenoid valve
(d) Make sure the engine is clear of all wiring, hoses and cables.
(e) Place the engine and transmission assembly onto the stand.

COMPONENTS FOR ENGINE & TRANSMISSION SEPERATION AND ASSEMBLY

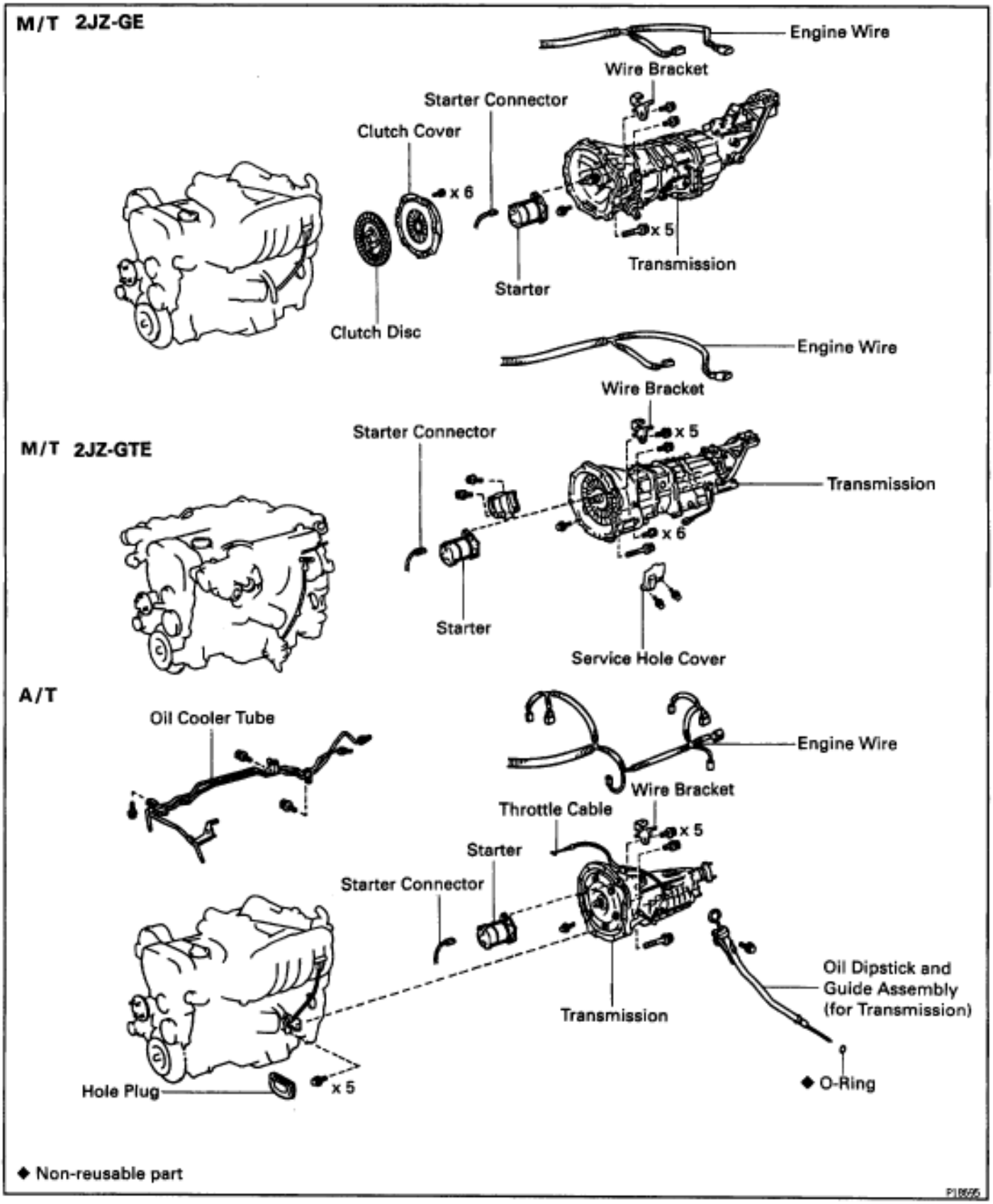

ENGINE & TRANSMISSION SEPARATION

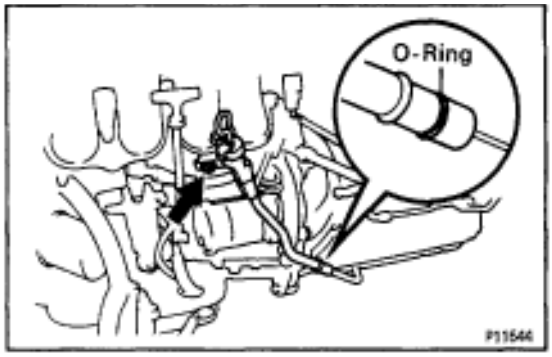

1. A/T:
REMOVE OIL DIPSTICK GUIDE FOR TRANSMISSION

(a) Remove the bolt.
(b) Pull out the dipstick and guide from the transmission.
(c) Remove the O–ring from the dipstick guide.

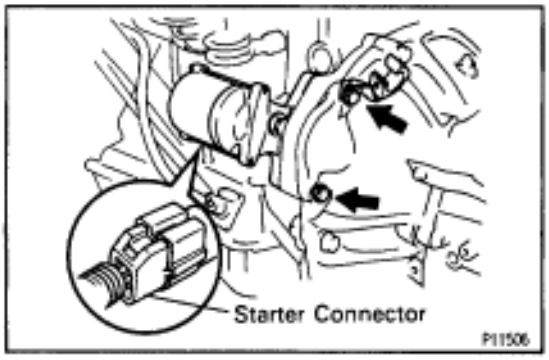

2. DISCONNECT ENGINE WIRE FROM TRANSMISSION

(a) Disconnect the connectors.
(b) Disconnect the wire clamps from the brackets.

3. REMOVE STARTER

(a) Disconnect the starter connector.
(b) Remove the 2 bolts, engine wire bracket and starter.

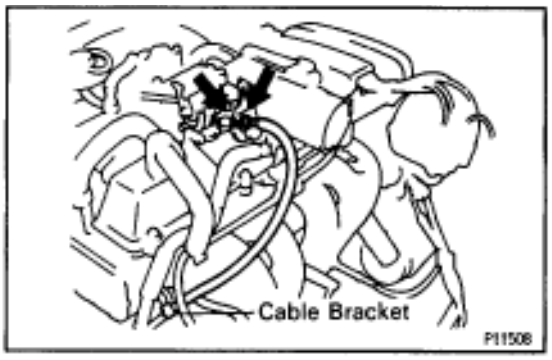

4. 2JZ–GE A/T:
DISCONNECT THROTTLE CABLE

(a) Disconnect the throttle cable from the throttle body.
(b) Disconnect the throttle cable from the cable bracket on the cylinder head.

5. A/T:
REMOVE OIL COOLER TUBES FOR TRANSMISSION

(a) Remove the 2 hose clamp bolts and tube clamp bolt.
(b) Loosen the 2 union nuts, and remove the oil cooler tubes.

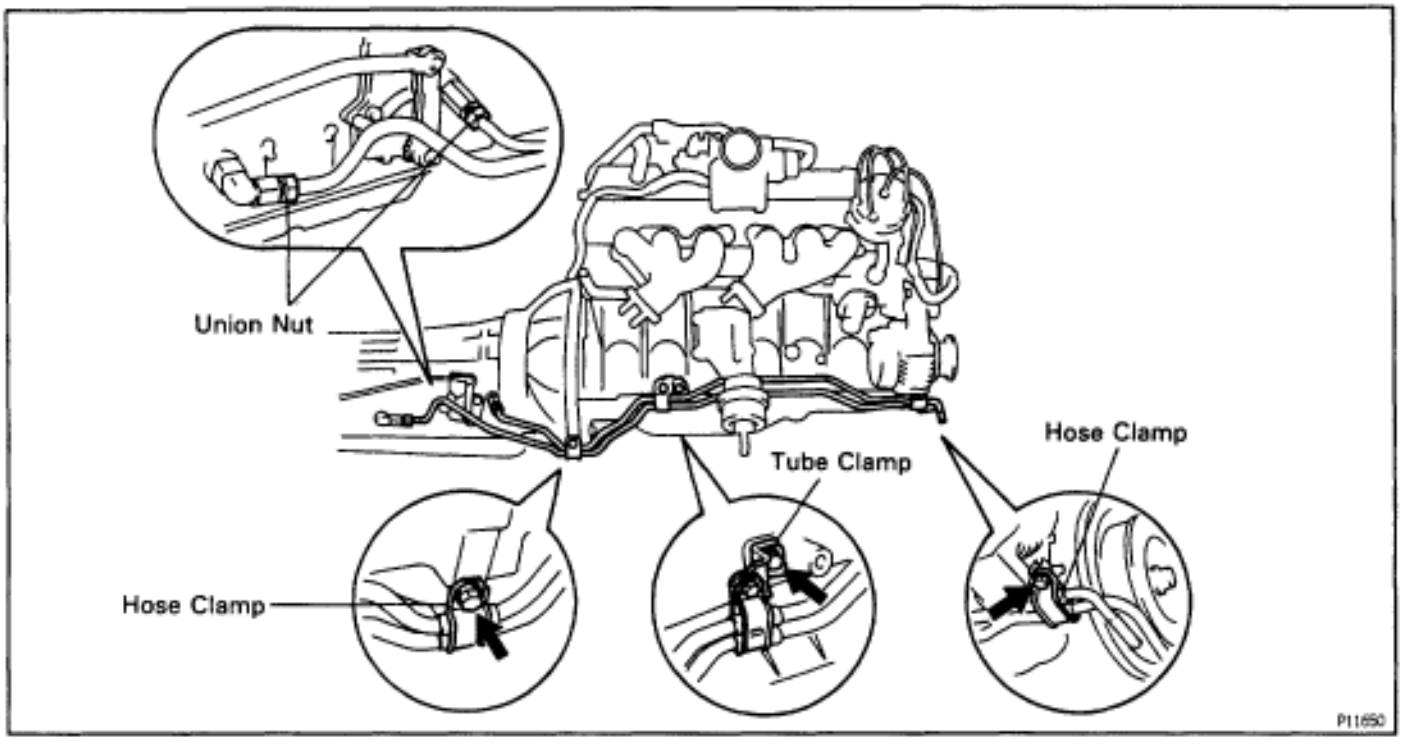

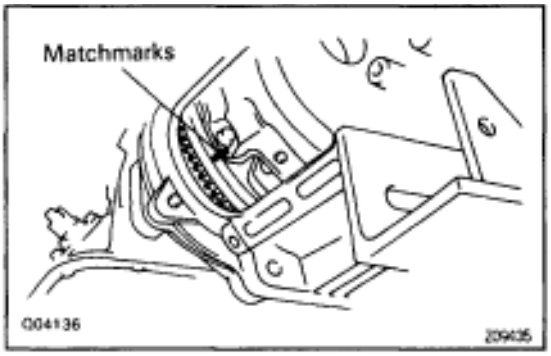

6. 2JZ–GTE M/T:
REMOVE CLUTCH COVER SET BOLTS

(a) Remove the 2 bolts and service hole cover.
(b) Place the matchmarks on the flywheel and clutch cover.
(c) Remove the 6 bolts.

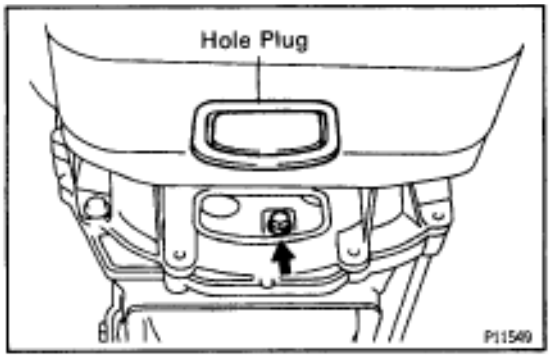

7. A/T:
REMOVE TORQUE CONVERTER CLUTCH MOUNTING BOLTS

(a) Remove the hole plug.
(b) Turn the crankshaft to gain access to each bolt.
Remove the 6 bolts.

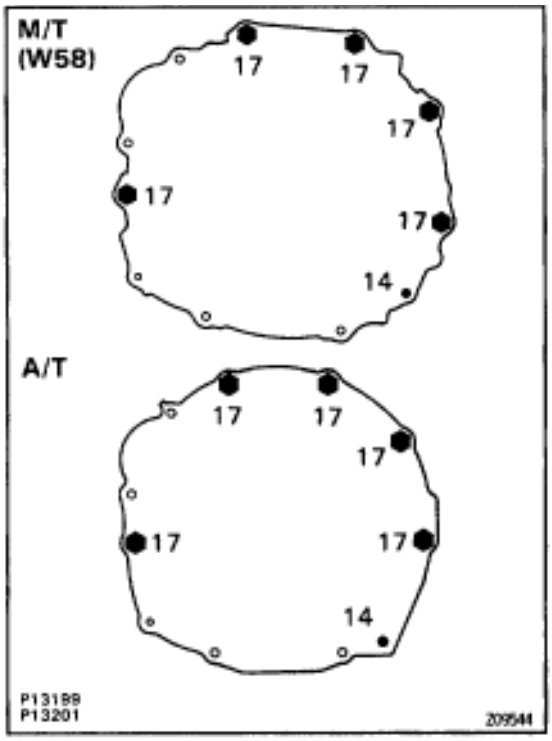

8. SEPARATE ENGINE AND TRANSMISSION
Remove the 6 bolts and transmission.
HINT: The ”17” is 17 mm head bolt, and ”14” is 14 mm head bolt.

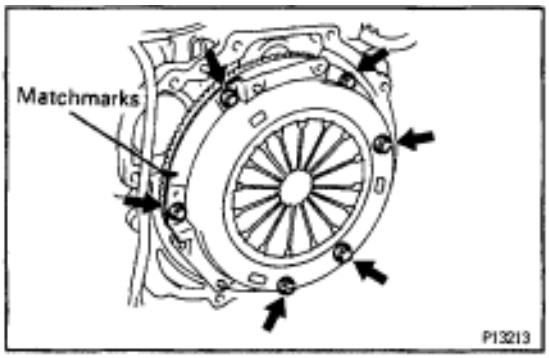

9. 2JZ–GE M/T:
REMOVE CLUTCH COVER AND DISC

(a) Place matchmarks on the flywheel and clutch cover.
(b) Loosen each bolt one turn at a time until spring tension is released.
(c) Remove the bolts, and pull off the clutch cover with the clutch disc.
NOTICE: Do not drop the clutch disc.

COMPONENTS FOR CYLINDER BLOCK DISASSEMBLY AND ASSEMBLY

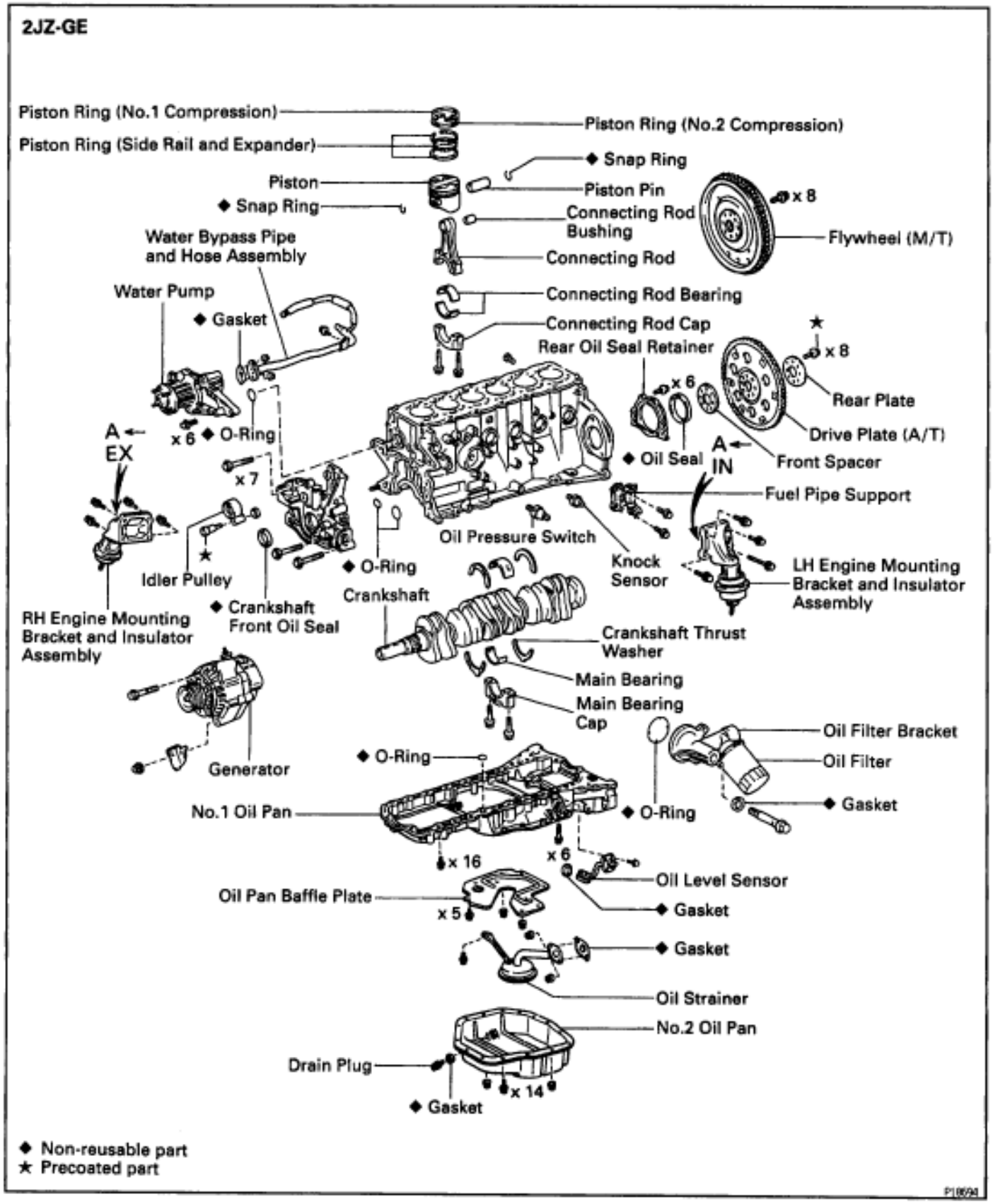

2JZ-GTE

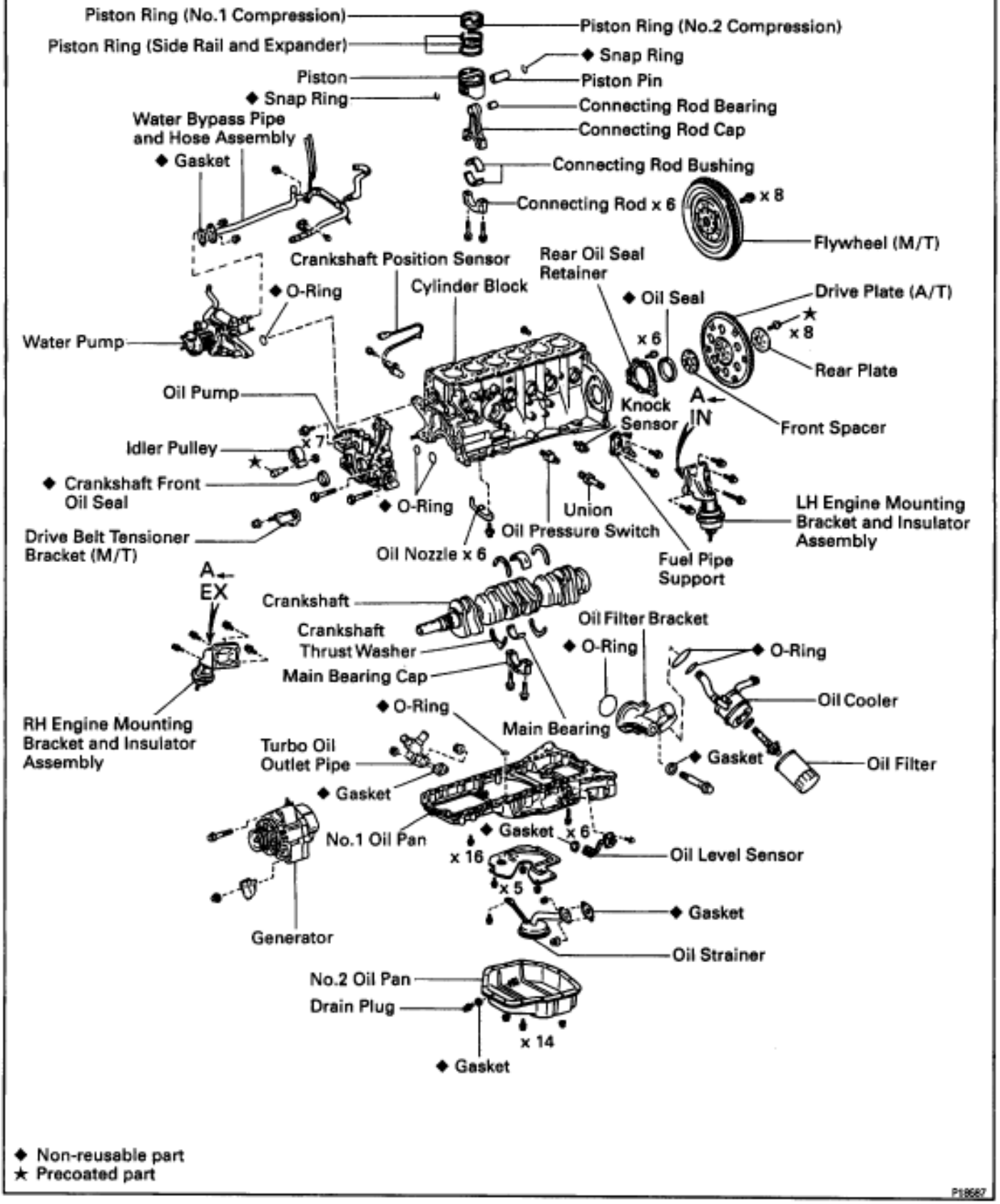

◆ Non-reusable part
★ Precoated part

P18687

PREPARATION FOR DISASSEMBLY

1. M/T:
REMOVE FLYWHEEL

2. A/T:
REMOVE DRIVE PLATE

3. INSTALL ENGINE TO ENGINE STAND FOR DISASSEMBLY

4. REMOVE GENERATOR

5. REMOVE TIMING BELT AND PULLEYS
(See timing belt removal)

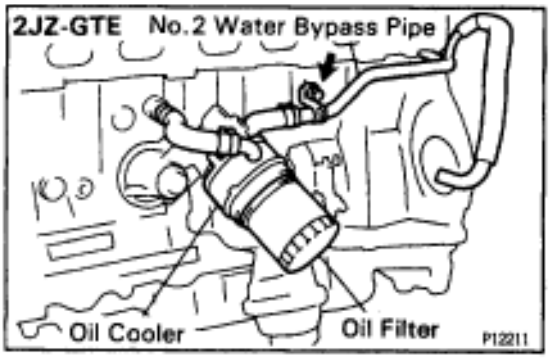

6. REMOVE CYLINDER HEAD
(See cylinder head removal)

7. REMOVE OIL FILTER
(See oil and filter replacement in Lubrication System)

8. 2JZ–GTE:
REMOVE OIL COOLER
(See oil cooler removal in Lubrication System)

9. REMOVE NO.2 WATER BYPASS PIPE

(a) 2JZ–GE:
Remove the bolt, 2 nuts, water bypass pipe and gasket.

(b) 2JZ–GTE:
Remove the 2 bolts, 2 nuts, water bypass pipe and gasket.

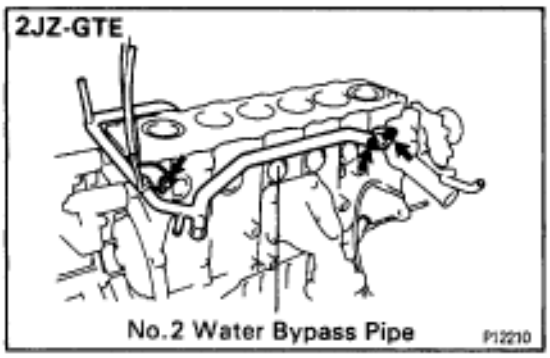

10. REMOVE OIL FILTER BRACKET
Remove the union bolt, gasket, oil filter bracket and O –ring.

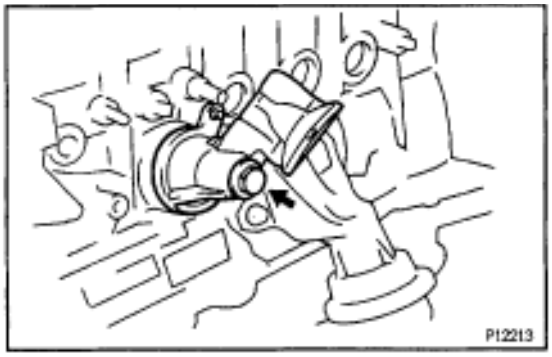

11. REMOVE LH ENGINE MOUNTING BRACKET AND INSULATOR ASSEMBLY

12. REMOVE FUEL PIPE SUPPORT

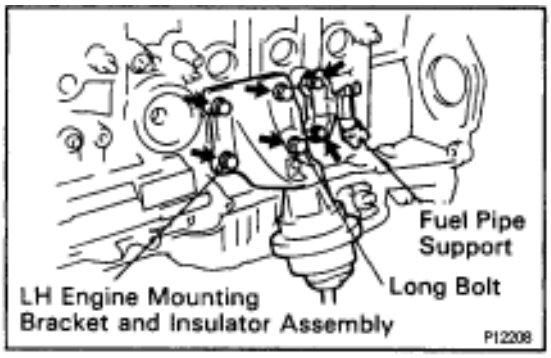

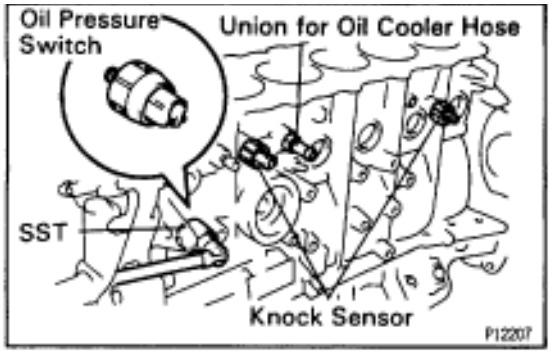

13. REMOVE OIL PRESSURE SWITCH AND KNOCK SENSORS

Using SST, remove the switch and sensors.
SST 09816–30010

14. 2JZ–GTE:
REMOVE UNION FOR OIL COOLER HOSE

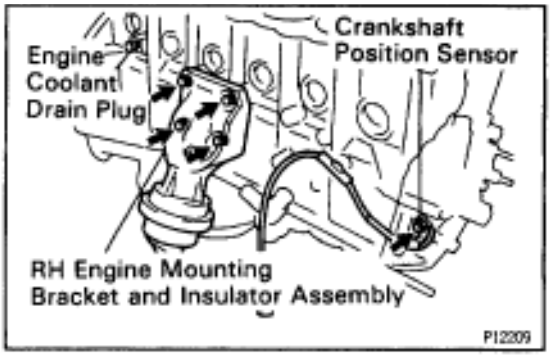

15. REMOVE ENGINE COOLANT DRAIN PLUG

16. REMOVE RH ENGINE MOUNTING BRACKET AND INSULATOR ASSEMBLY

17. 2JZ–GTE:
REMOVE CRANKSHAFT POSITION SENSOR

18. REMOVE WATER PUMP
(See water pump removal in Cooling System)

19. REMOVE OIL PUMP
(See oil pump removal in Lubrication System)

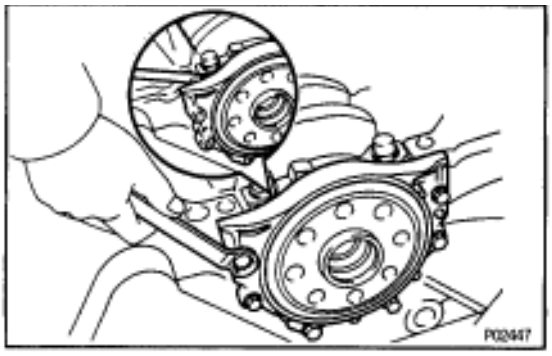

CYLINDER BLOCK DISASSEMBLY

1. REMOVE REAR OIL SEAL RETAINER

(a) Remove the 6 bolts.

(b) Remove the oil seal retainer by prying the area between the oil seal retainer and main bearing cap with a screwdriver.

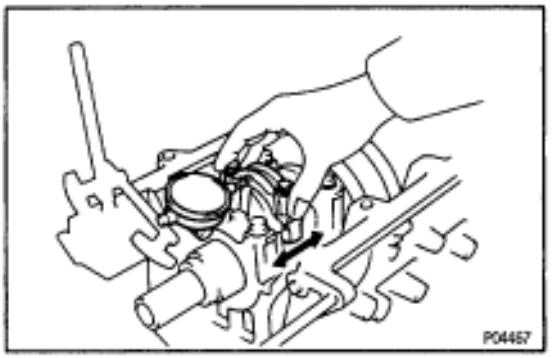

2. CHECK CONNECTING ROD THRUST CLEARANCE

Using a dial indicator, measure the thrust clearance while moving the connecting rods back and forth.

Standard thrust clearance:

0.250–0.402 mm (0.0098–0.0158 in.)

Maximum thrust clearance:

0.50 mm (0.0197 in.)

If the thrust clearance is greater than maximum, replace the connecting rod assembly(s). If necessary, replace the crankshaft.

Connecting rod thickness:

25.898–25.950 mm (1.0196–1.0217 in.)

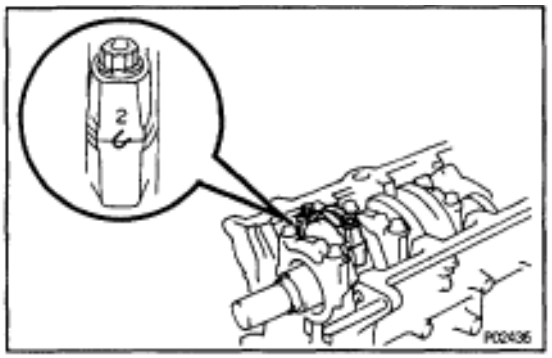

3. REMOVE CONNECTING ROD CAPS AND CHECK OIL CLEARANCE

(a) Check the matchmarks on the connecting rod and cap to ensure correct reassembly.

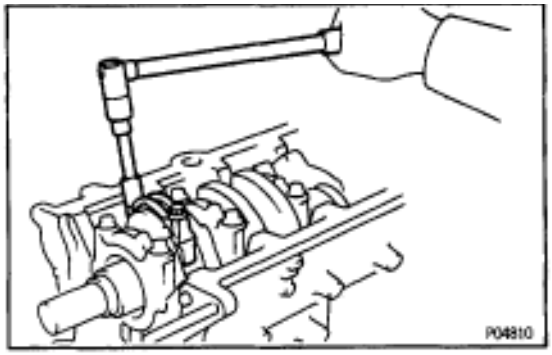

(b) Remove the connecting rod cap bolts.

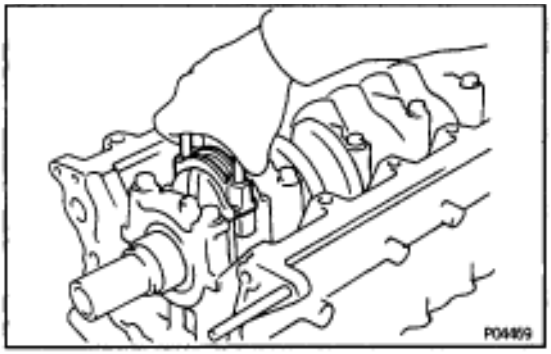

(c) Using the 2 removed connecting rod bolts, remove the connecting rod cap and lower bearing by wiggling the connecting rod cap right and left.
HINT: Keep the lower bearing inserted with the connecting rod cap.

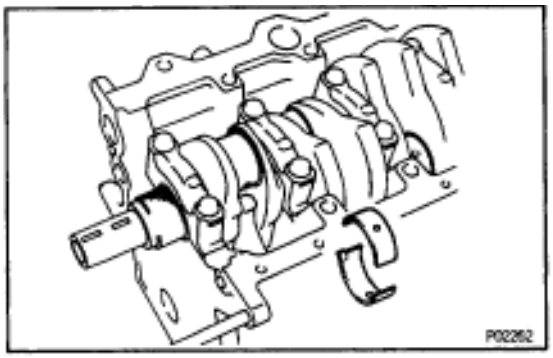

(d) Clean the crank pin and bearings.
(e) Check the crank pin and bearing for pitting and scratches.
If the crank pin or bearing is damaged, replace the bearings.
If necessary, replace the crankshaft.

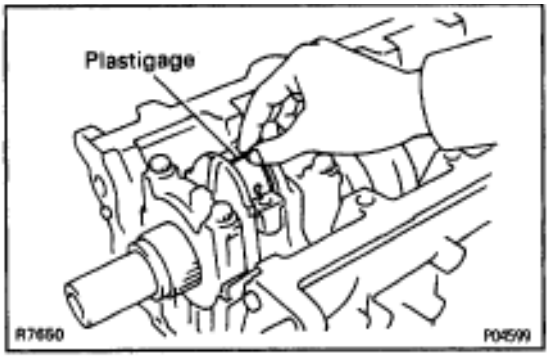

(f) Lay a strip of Plastigage across the crank pin.

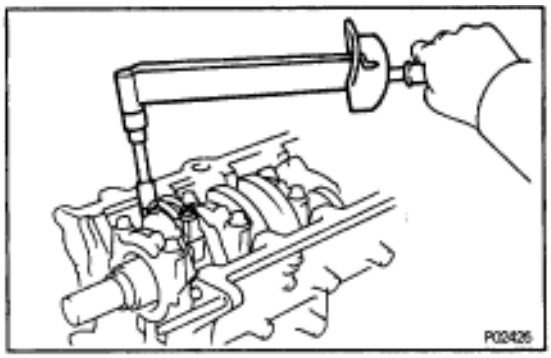

(g) Install the connecting rod cap with the 2 bolts.
(See step 8 in cylinder block assembly)
Torque:
1st
29 N·m (300 kgf·cm, 22 ft·lbf)
2nd
Turn 90°
NOTICE: Do not turn the crankshaft.
(h) Remove the 2 bolts, connecting rod cap and lower bearing.
(See procedure (b) and (c) above)

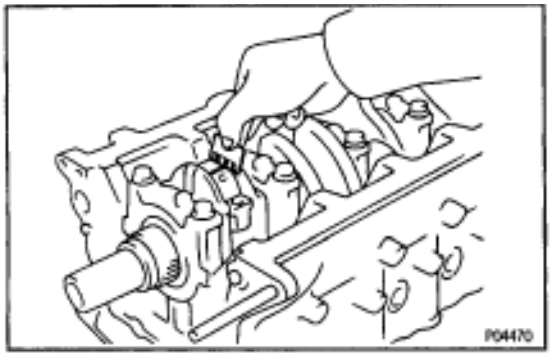

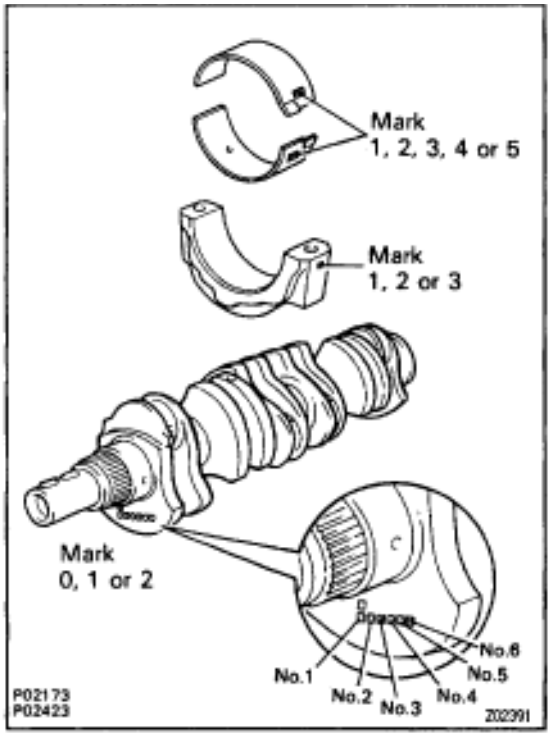

(i) Measure the Plastigage at its widest point.

Standard oil clearance:

STD

.035–0.053 mm (0.0014–0.0021 in.)

U/S 0.25

.040–0.078 mm (0.0016–0.0031 in.)

Maximum oil clearance.

STD

.08 mm (0.0031 in.)

U/S 0.25

.09 mm (0.0035 in.)

If the oil clearance is greater than maximum, replace the bearings. If necessary, grind or replace the crankshaft.

HINT: If using a standard bearing, replace with one having the same number. If the number of the bearing cannot be determined, select the correct bearing by adding together the numbers imprinted on the connecting rod cap and crankshaft, then selecting the bearing with the same number as the total. There are 5 sizes of standard bearings, marked ”1”, ”2”, ”3”, ”4” and ”5” accordingly.

	Number mark								
Connecting rod cap	1			2			3		
Crankshaft	0	1	2	0	1	2	0	1	2
Use bearing	1	2	3	2	3	4	3	4	5

EXAMPLE: Connecting rod cap ”3” +Crankshaft ”1” = Total number 4 (Use bearing ”4”)

Reference:

Connecting rod big end inside diameter:

Mark ”1”

55.025–55.031 mm (2.1663–2.1666 in.)

Mark ”2”

55.031–55.037 mm (2.1666–2.1668 in.)

Mark ”3”

55.037–55.043 mm (2.1668–2.1670 in.)

Crankshaft crank pin diameter:

Mark ”0”

51.994–52.000 mm (2.0470–2.0472 in.)

Mark ”1”

51.988–51.994 mm (2.0468–2.0470 in.)

Mark ”2”

51.982–51.988 mm (2.0465–2.0468 in.)

Bearing center wall thickness:

Mark ”1”

1.492–1.495 mm (0.0587–0.0589 in.)

Mark ”2”

1.495–1.498 mm (0.0589–0.0590 in.)

Mark ”3”

1.498–1.501 mm (0.0590–0.0591 in.)

Mark ”4”

1.501–1.504 mm (0.0591–0.0592 in.)

Mark ”5”

1.504–1.507 mm (0.0592–0.0593 in.)

(j) Completely remove the Plastigage.

4. REMOVE PISTON AND CONNECTING ROD ASSEMBLIES

(a) Using a ridge reamer, remove all the carbon from the top of the cylinder.

(b) Push the piston, connecting rod assembly and upper bearing through the top of the cylinder block.

HINT:

- Keep the bearings, connecting rod and cap together.
- Arrange the piston and connecting rod assemblies in correct order.

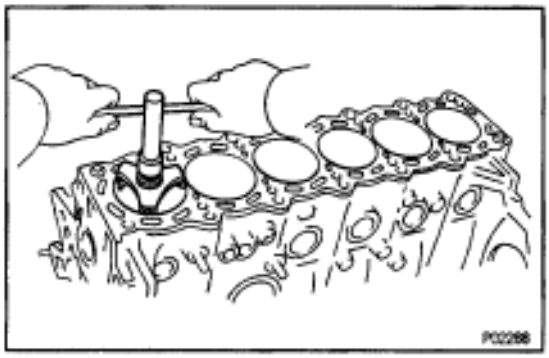

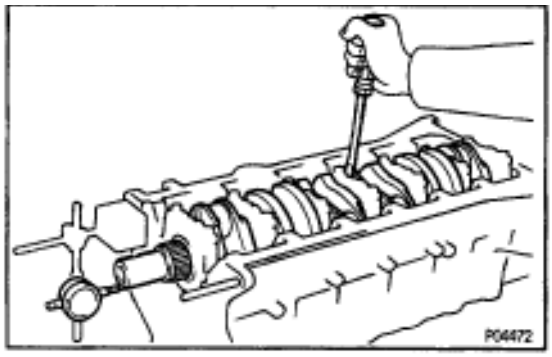

5. CHECK CRANKSHAFT THRUST CLEARANCE

Using a dial indicator, measure the thrust clearance while prying the crankshaft back and forth with a screwdriver.

Standard thrust clearance:

0.020–0.220 mm (0.0008–0.0087 in.)

Maximum thrust clearance:

0.30 mm (0.0118 in.)

If the thrust clearance is greater than maximum, replace the thrust washers as a set.

Thrust washer thickness:

1.940–1.990 mm (0.0764–0.0783 in.)

6. REMOVE MAIN BEARING CAPS AND CHECK OIL CLEARANCE

(a) Uniformly loosen and remove the 14 main bearing cap bolts, in seversal passes, in the sequence shown.

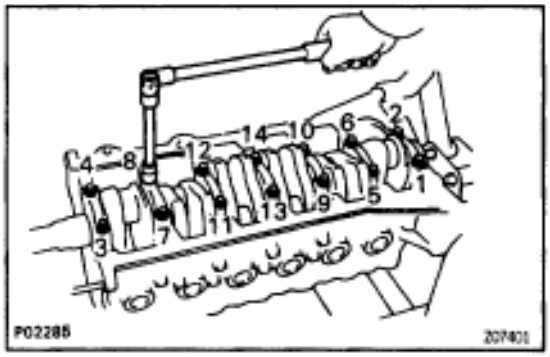

(b) Using the removed main bearing cap bolts, pry the main bearing cap back and forth, and remove the main bearing caps, lower bearings and lower thrust washers (No.4 main bearing cap only).

HINT:

- Keep the lower bearing and main bearing cap together.
- Arrange the main bearing caps and lower thrust washers in correct order.

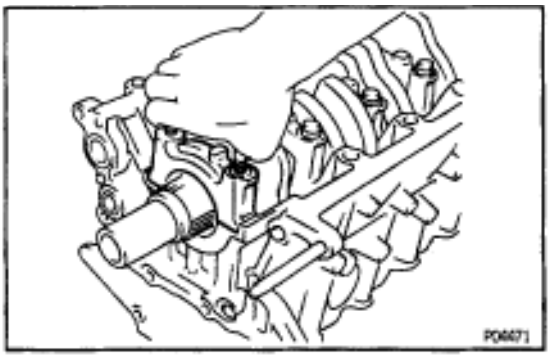

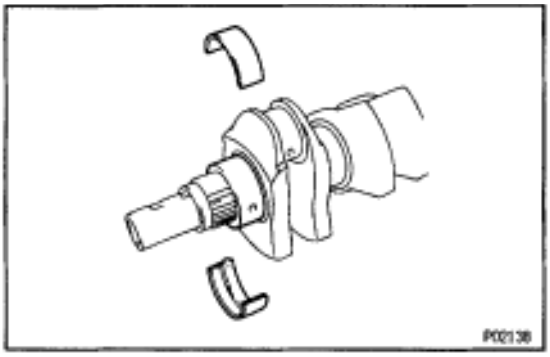

(c) Lift out the crankshaft.
HINT: Keep the upper bearing and upper thrust washers together with the cylinder block.
(d) Clean each main journal and bearing.
(e) Check each main journal and bearing for pitting and scratches.
If the journal or bearing is damaged, replace the bearings. If necessary, grind or replace the crankshaft.

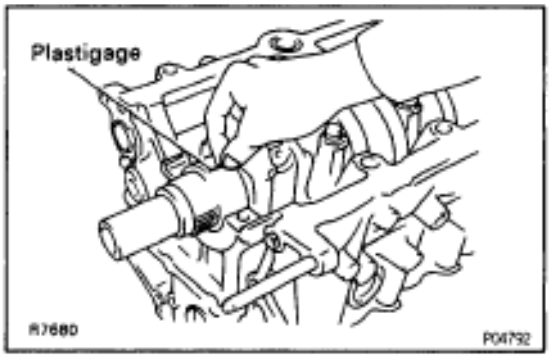

(f) Place the crankshaft on the cylinder block.
(g) Lay a strip of Plastigage across each journal.

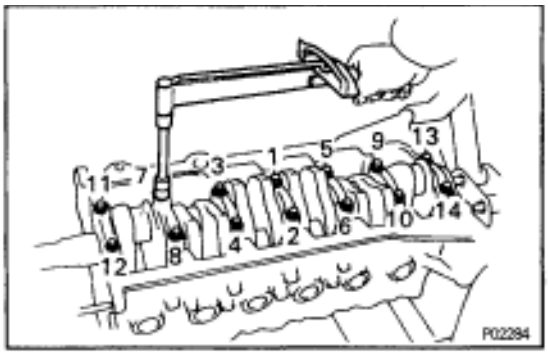

(h) Install the main bearing caps.
(See step 5 in cylinder block installation)
Torque:
1st
44 N·m (450 kgf·cm, 33 ft·lbf)
2nd
Turn 90°
NOTICE: Do not turn the crankshaft.
(i) Remove the main bearing caps.
(See procedures (a) and (b) above)

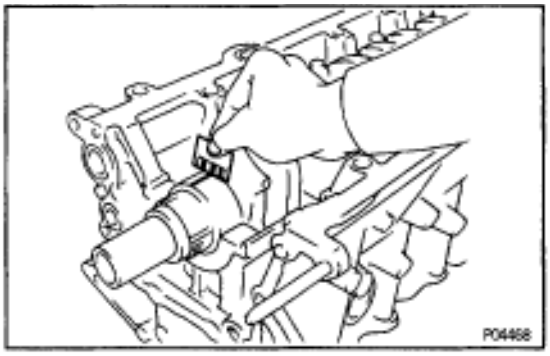

(j) Measure the Plastigage at its widest point.
Standard clearance:
STD
.026–0.040 mm (0.0010–0.0016 in.)
U/S 0.25
.025–0.061 mm (0.0010–0.0024 in.)
Maximum clearance:
STD
.06 mm (0.0024 in.)
U/S 0.25
.08 mm (0.0031 in.)
If the oil clearance is greater than maximum, replace the bearings. If necessary, grind or replace the crankshaft.

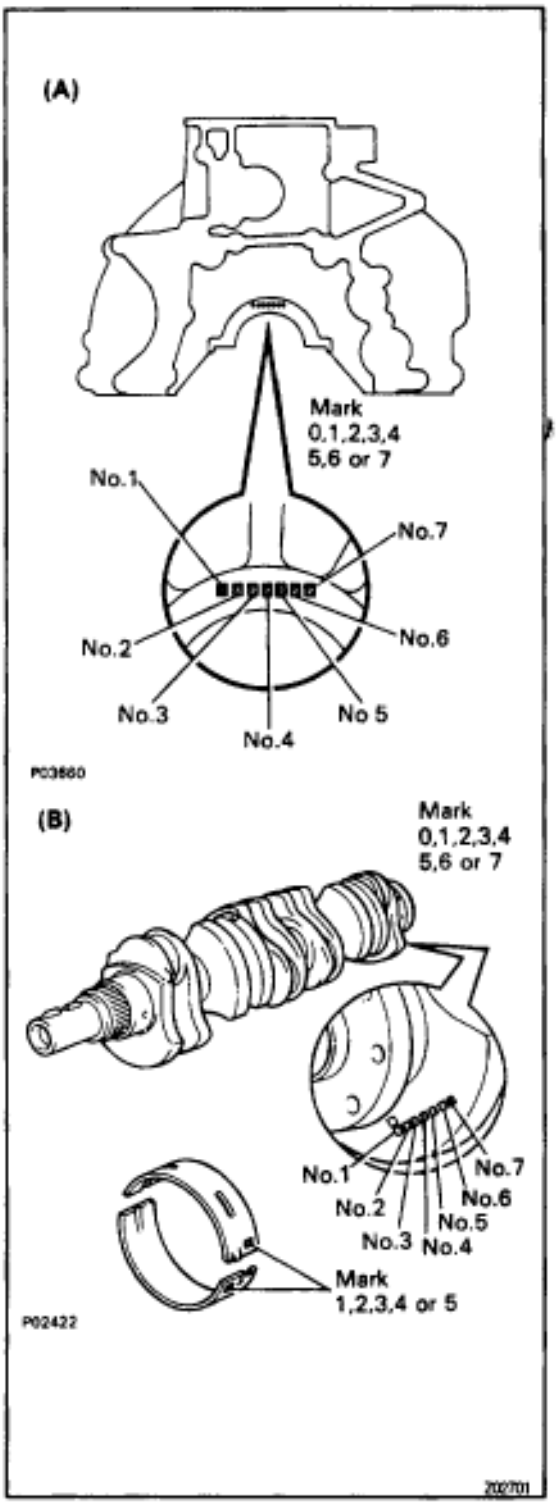

HINT: If using a standard bearing, replace with one having the same number. If the number of the bearing cannot be determined, select the correct bearing by adding together the numbers imprinted on the cylinder block and crankshaft, then refer to the table below for the appropriate bearing number. There are 5 sizes of standard bearings, marked ”1”, ”2”, ”3”, ”4” and ”5” accordingly.

	Total number ” ”:Number mark				
Cylinder block (A) + Crankshaft (B) =	0–2	3–5	6–8	9–11	12–14
Use bearing	”1”	”2”	”3”	”4”	”5”

EXAMPLE: Cylinder block ”3” (A)
+ Crankshaft ”4”(B)
= Total number 7 (Use bearing ”3”)

Reference:

Cylinder block main journal bore diameter (A):

Mark ”0”
66.020–66.022 mm (2.59922–2.59929 in.)
Mark ”1”
66.022–66.024 mm (2.59929–2.59936 in.)
Mark ”2”
66.024–66.026 mm (2.59936–2.59944 in.)
Mark ”3”
66.026–66.028 mm (2.59944–2.59952 in.)
Mark ”4”
66.028–66.030 mm (2.59952–2.59960 in.)
Mark ”5”
66.030–66.032 mm (2.59960–2.59968 in.)
Mark ”6”
66.032–66.034 mm (2.59968–2.59976 in.)
Mark ”7”
66.034–66.036 mm (2.59976–2.59984 in.)

Crankshaft main journal diameter (B):

Mark ”0”
61.998–62.000 mm (2.44086–2.44094 in.)
Mark ”1”
61.996–61.998 mm (2.44078–2.44086 in.)
Mark ”2”
61.994–61.996 mm (2.44070–2.44078 in.)
Mark ”3”
61.992–61.994 mm (2.44063–2.44070 in.)
Mark ”4”
61.990–61.992 mm (2.44055–2.44063 in.)
Mark ”5”
61.988–61.990 mm (2.44047–2.44055 in.)

Mark ”6”

61.986–61.988 mm (2.44039–2.44047 in.)

Mark ”7”

61.984–61.986 mm (2.44031–2.44039 in.)

Bearing center wall thickness:

Mark ”1”

1.994–1.997 mm (0.0785–0.0786 in.)

Mark ”2”

1.997–2.000 mm (0.0786–0.0787 in.)

Mark ”3”

2.000–2.003 mm (0.0787–0.0789 in.)

Mark ”4”

2.003–2.006 mm (0.0789–0.0790 in.)

Mark ”5”

2.006–2.009 mm (0.0790–0.0791 in.)

Standard sized Bearing Selection chart

Crankshaft number mark	Cylinder block number mark							
	0	1	2	3	4	5	6	7
0	1	1	1	2	2	2	3	3
1	1	1	2	2	2	3	3	3
2	1	2	2	2	3	3	3	4
3	2	2	2	3	3	3	4	4
4	2	2	3	3	3	4	4	4
5	2	3	3	3	4	4	5	5
6	3	3	3	4	4	5	5	5
7	3	3	4	4	5	5	5	5

EXAMPLE: Cylinder block ”3” Crankshaft ”4”
= Use bearing ”3”

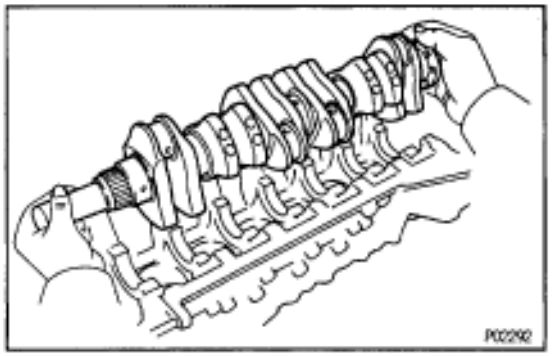

(k) Completely remove the Plastigage.

7. REMOVE CRANKSHAFT

(a) Lift out the crankshaft

(b) Remove the upper bearings and upper thrust washers from the cylinder block.

HINT: Arrange the main bearing caps, bearings and thrust washers in the correct order.

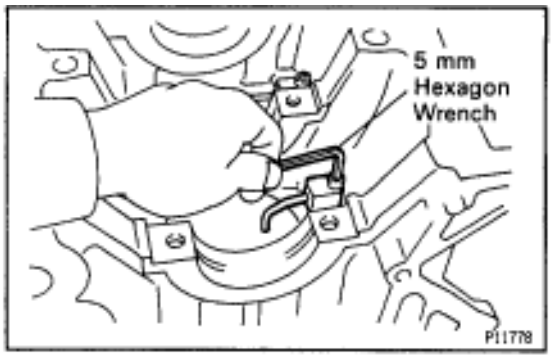

8. 2JZ–GTE:

REMOVE OIL NOZZLES (WITH RELIEF VALVES)

Using a 5 mm hexagon wrench, remove the bolt and oil nozzle. Remove the 6 oil nozzles.

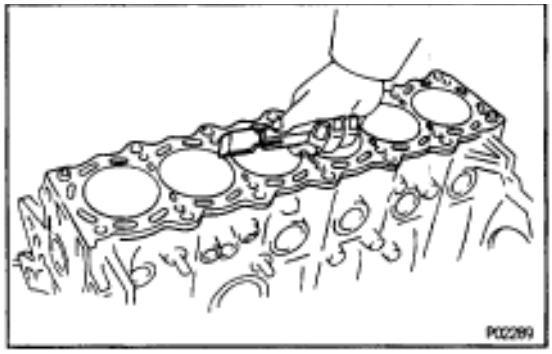

CYLINDER BLOCK INSPECTION

1. CLEAN CYLINDER BLOCK

A. Remove gasket material

Using a gasket scraper, remove all the gasket material from the cylinder block surface.

B. Clean cylinder block

Using a soft brush and solvent, thoroughly clean the cylinder block.

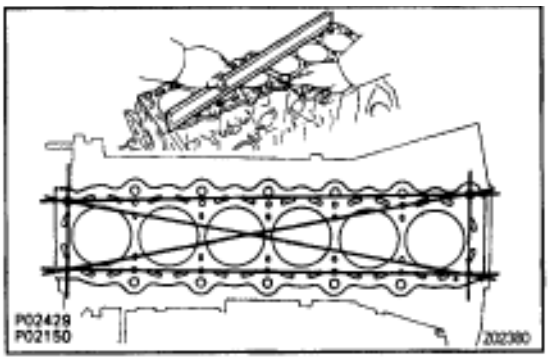

2. INSPECT CYLINDER BLOCK SURFACE FOR FLATNESS

Using precision straight edge and feeler gauge, measure the surfaces of the cylinder block for warpage.

Maximum warpage:

0.07 mm (0.0028 in.)

If warpage is greater than maximum, replace the cylinder block.

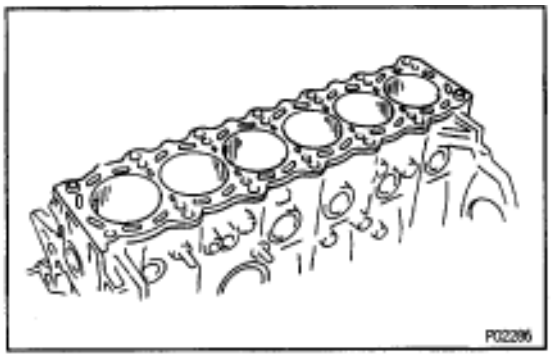

3. INSPECT CYLINDER FOR VERTICAL SCRATCHES

Visually check the cylinder for vertical scratches.

If deep scratches are present, replace the cylinder block.

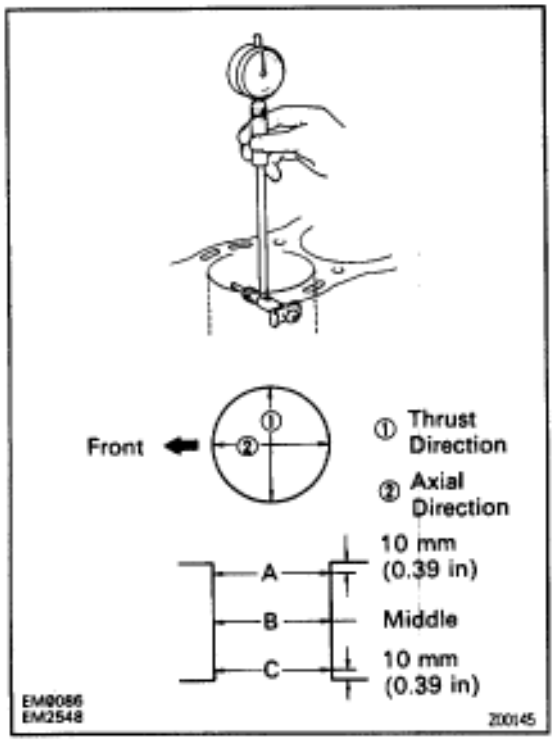

4. INSPECT CYLINDER BORE DIAMETER

Using a cylinder gauge, measure the cylinder bore diameter at positions A, B and C in the thrust and axial directions.

Standard diameter:

86.000–86.013 mm (3.3858–3.3863 in.)

Maximum diameter:

86.02 mm (3.3866 in.)

If the diameter is greater than maximum, replace the cylinder block.

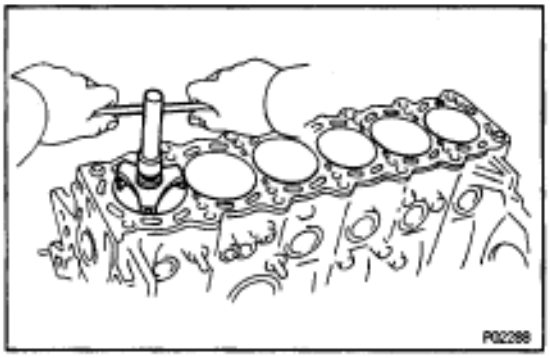

5. REMOVE CYLINDER RIDGE

If the wear is less than 0.2 mm (0.008 in.), using a ridge reamer, grind the top of the cylinder.

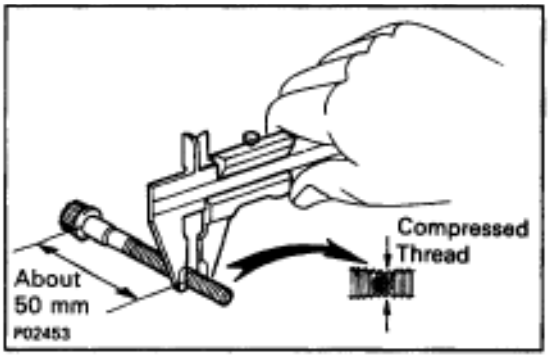

6. INSPECT MAIN BEARING CAP BOLTS

Using vernier calipers, measure the minimum diameter of the compressed thread at the measuring point.

Standard diameter:

9.96–9.97 mm (0.3921–0.3925 in.)

Minimum diameter:

9.7 mm (0.382 in.)

If the diameter is less than minimum, replace the bolt.

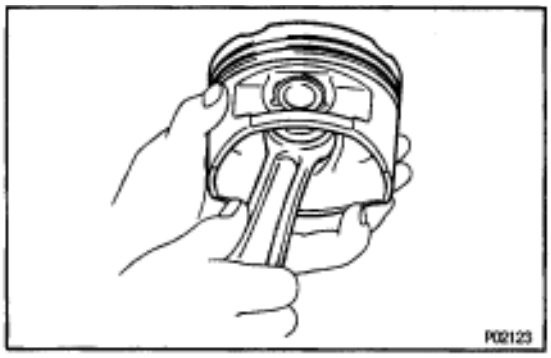

PISTON AND CONNECTING ROD DISASSEMBLY

1. CHECK FIT BETWEEN PISTON AND PISTON PIN

Try to move the piston back and forth on the piston pin.

If any movement is felt, replace the piston and pin as a set.

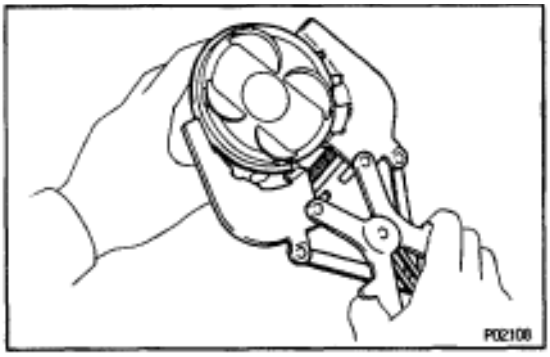

2. REMOVE PISTON RINGS

(a) Using a piston ring expander, remove the 2 compression rings.

(b) Remove the 2 side rails and oil ring expander by hand.

HINT: Arrange the piston rings in correct order only.

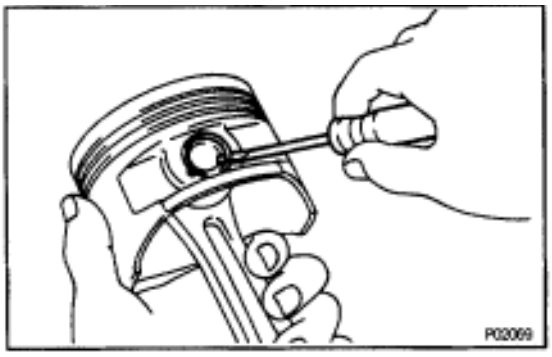

3. DISCONNECT CONNECTING ROD FROM PISTON

(a) Using a small screwdriver, remove the 2 snap rings.

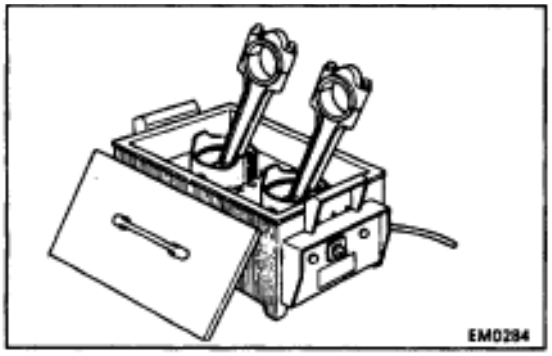

(b) Gradually heat the piston to about 80˚C (176˚F).

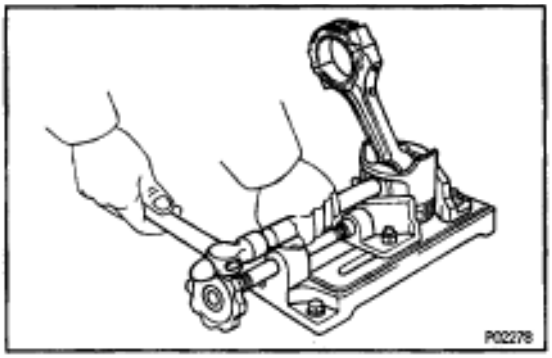

(c) Using a plastic–faced hammer and brass bar, lightly tap out the piston pin and remove the connecting rod.
HINT:
- The piston and pin are a matched set.
- Arrange the pistons, pins, rings, connecting rods and bearings in the correct order.

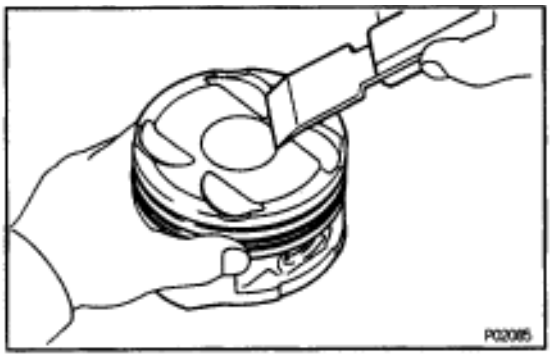

PISTON AND CONNECTING ROD INSPECTION

1. CLEAN PISTON

(a) Using a gasket scraper, remove the carbon from the piston top.

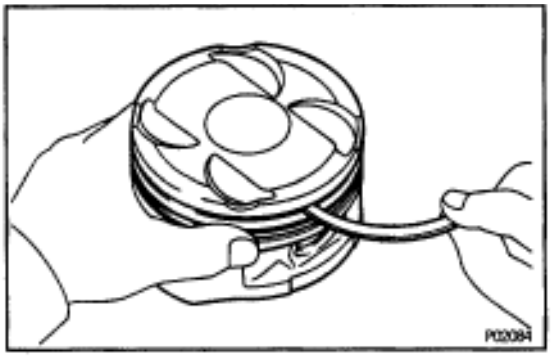

(b) Using a groove cleaning tool or broken ring, clean the piston ring grooves.

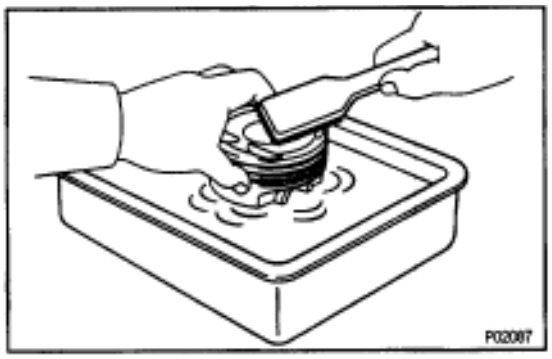

(c) Using solvent and a brush, thoroughly clean the piston.
NOTICE: Do not use a wire brush.

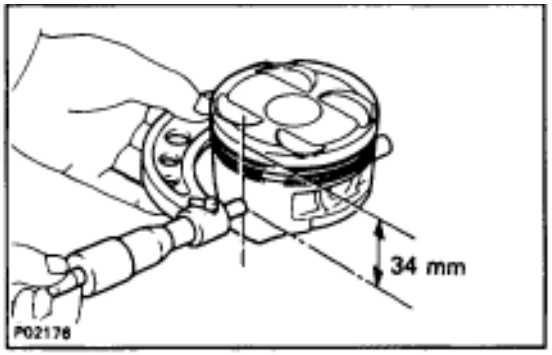

2. INSPECT PISTON

A. Inspect piston oil clearance

(a) Using a micrometer, measure the piston diameter at right angles to the piston pin center line, 34 mm (1.34 in.) from the piston head.

Piston diameter:

2JZ–GE

85.935–85.945 mm (3.3833–3.3837 in.)

2JZ–GTE

85.917–85.927 mm (3.3826–3.3830 in.)

(b) Measure the cylinder bore diameter in the thrust directions. (See step 4 in cylinder block inspection)

(c) Subtract the piston diameter measurement from the cylinder bore diameter measurement.

Standard oil clearance:

2JZ–GE

.055–0.078 mm (0.0022–0.0031 in.)

2JZ–GTE

.073–0.096 mm (0.0029–0.0038 in.)

Maximum oil clearance:

2JZ–GE

.10 mm (0.0039 in.)

2JZ–GTE

.12 mm (0.0047 in.)

If the oil clearance is greater than maximum, replace all the 6 pistons. If necessary, replace the cylinder block.

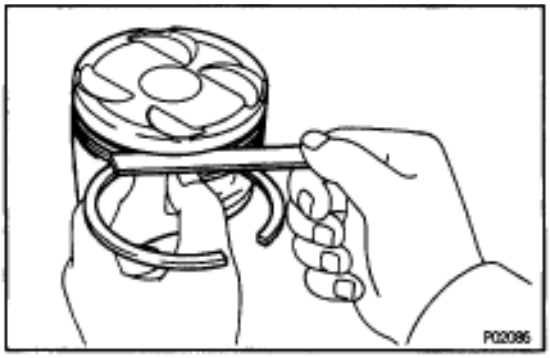

B. Inspect piston ring groove clearance

Using a feeler gauge, measure the clearance between new piston ring and the wall of the piston ring groove.

Ring groove clearance:

No.1

2JZ–GE

0.011–0.070 mm (0.0004–0.0028 in.)

2JZ–GTE

0.040–0.080 mm (0.0016–0.0031 in.)

No.2

.030–0.070 mm (0.0012–0.0028 in.)

If the clearance is not as specified, replace the piston.

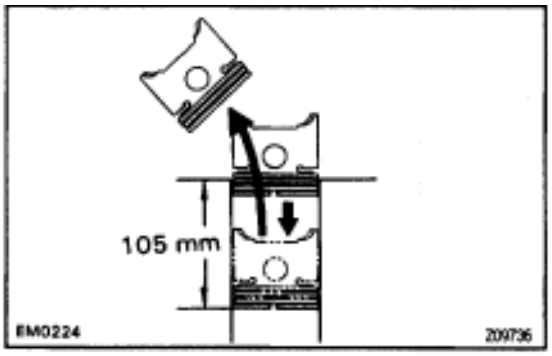

C. Inspect piston ring end gap

(a) Insert the piston ring into the cylinder bore.

(b) Using a piston, push the piston ring a little beyond the bottom of the ring travel, 105 mm (4.13 in.) from the top of the cylinder block.

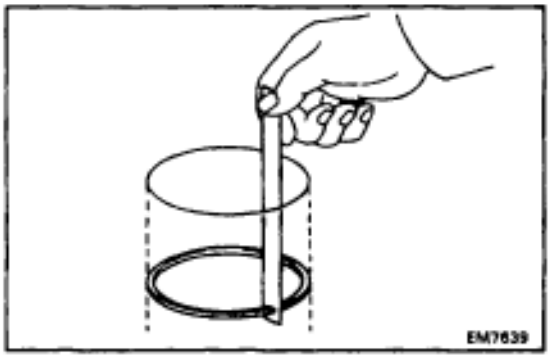

(c) Using a feeler gauge, measure the ring end gap.

Standard ring end gap:

No.1

2JZ–GE

0.300–0.470 mm (0.0118–0.0185 in.)

2JZ–GTE

0.300–0.400 mm (0.0118–0.0157 in.)

No.2

2JZ–GE

0.350–0.520 mm (0.0138–0.0205 in.)

2JZ–GTE

0.350–0.450 mm (0.0138–0.0178 in.)

Oil (Side rail)

2JZ–GE

0.130–0.450 mm (0.0051–0.0177 in.)

2JZ–GTE

0.130–0.380 mm (0.0051–0.0150 in.)

Maximum ring end gap:

No.1

2JZ–GE

1.07 mm (0.0421 in.)

2JZ–GTE

1.00 mm (0.0394 in.)

No.2

2JZ–GE

1.12 mm (0.0441 in.)

2JZ–GTE

1.05 mm (0.0413 in.)

Oil (Side rail)

2JZ–GE

1.05 mm (0.0413 in.)

2JZ–GTE

0.98 mm (0.0386 in.)

If the end gap is greater than maximum, replace the piston ring. If the end gap is greater than maximum, even with a new piston ring, replace the cylinder block.

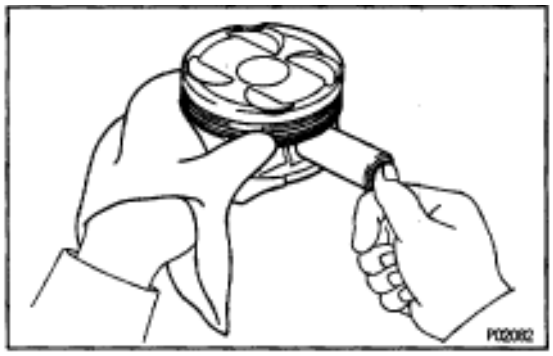

D. Inspect piston pin fit

At 80°C (176°F), you should be able to push the piston pin into the piston pin hole with your thumb.

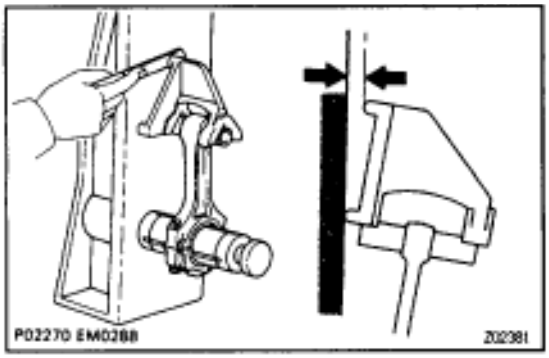

3. INSPECT CONNECTING ROD

A. Inspect connecting rod alignment

Using a feeler gauge and rod aligner, check the connecting rod alignment.

- Check for out–of–alignment

Maximum out–of–alignment:

0.05 mm (0.0020 in.) per 100 mm (3.94 in.)

If out–of–alignment is greater than maximum, replace the connecting rod assembly.

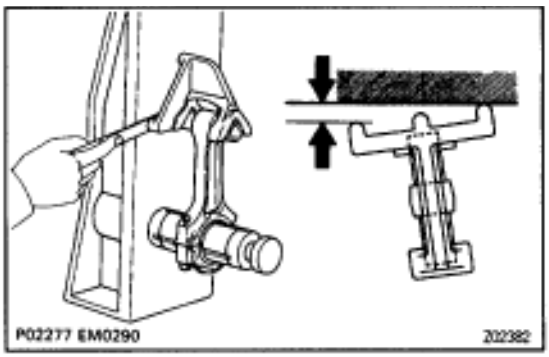

- Check for twist

Maximum twist:

0.15 mm (0.0059 in.) per 100 mm (3.94 in.)

If twist is greater than maximum, replace the connecting rod assembly.

B. Inspect piston pin oil clearance

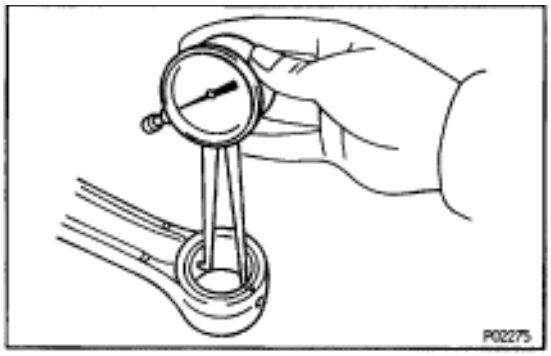

(a) Using a caliper gauge, measure the inside diameter of the connecting rod bushing.

Bushing inside diameter:

22.005–22.014 mm (0.8663–0.8667 in.)

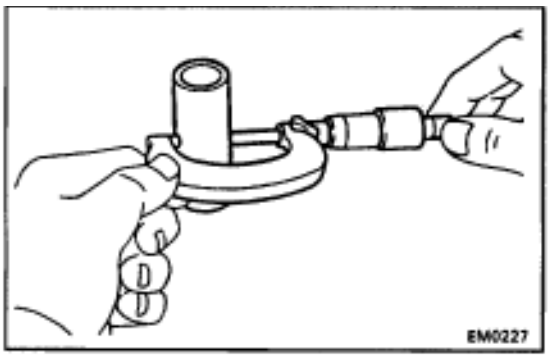

(b) Using a micrometer, measure the piston pin diameter.

Piston pin diameter:

21.997–22.006 mm (0.8660–0.8664 in.)

(c) Subtract the piston pin diameter measurement from the bushing inside diameter measurement.

Standard oil clearance:

0.005–0.011 mm (0.0002–0.0004 in.)

Maximum oil clearance:

0.05 mm (0.0020 in.)

If the oil clearance is greater than maximum, replace the bushing. If necessary, replace the piston and piston pin as a set.

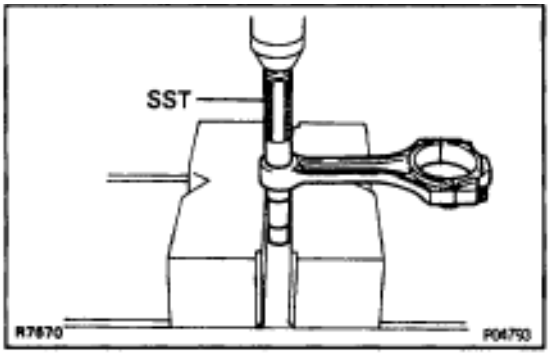

C. If necessary, replace connecting rod bushing

(a) Using SST and a press, press out the bushing.
SST 09222–30010

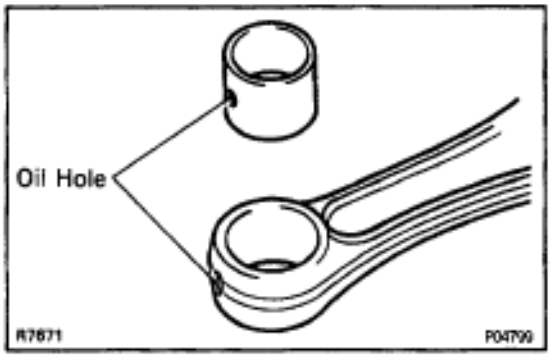

(b) Align the oil holes of a new bushing and the connecting rod.

(c) Using SST and a press, press in the bushing.
SST 09222–30010

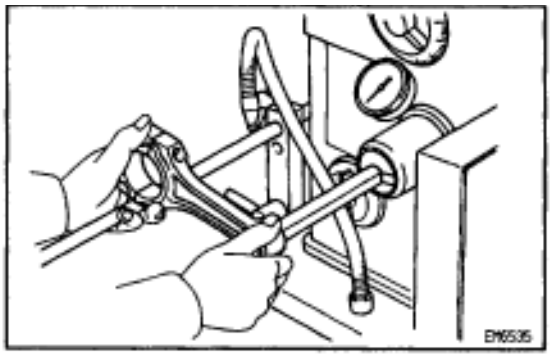

(d) Using a pin hole grinder, bore the bushing to obtain the standard specified clearance (see step B) between the bushing and piston pin.

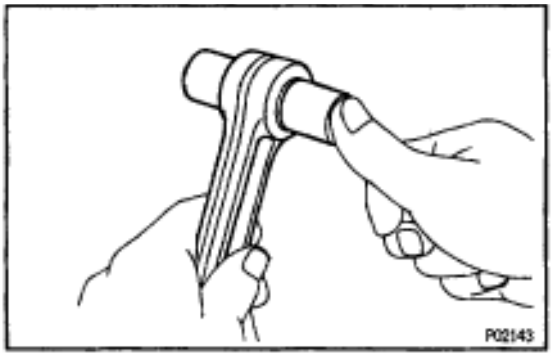

(e) Check the piston pin fit at room temperature.
Coat the piston pin with engine oil and push it into the connecting rod with your thumb.

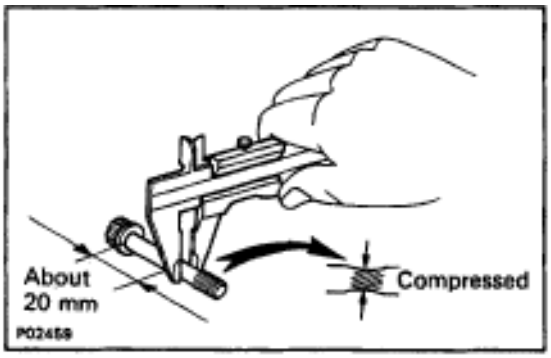

D. Inspect connecting rod bolts

Using vernier calipers, measure the minimum diameter of the compressed bolt at the measuring point.

Standard diameter:

8.1–8.3 mm (0.319–0.327 in.)

Minimum diameter:

8.0 mm (0.315 in.)

If the diameter is less than minimum, replace the connecting rod bolt.

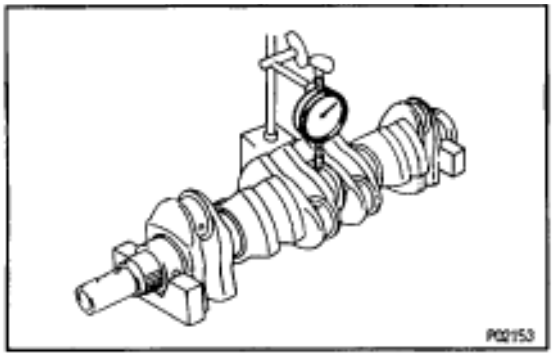

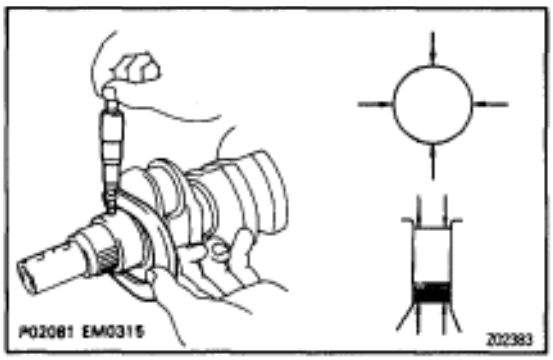

CRANKSHAFT INSPECTION

1. INSPECT CRANKSHAFT FOR RUNOUT

(a) Place the crankshaft on V–blocks.

(b) Using a dial indicator, measure the circle runout at the center journal.

Maximum circle runout:

0.06 mm (0.0024 in.)

If the circle runout is greater than maximum, replace the crankshaft.

2. INSPECT MAIN JOURNALS AND CRANK PINS

(a) Using a micrometer, measure the diameter of each main journal and crank pin.

Main journal diameter:

STD

61.984–62.000 mm (2.4403–2.4409 in.)

U/S 0.25

61.745–61.755 mm (2.4309–2.4313 in.)

Crank pin diameter:

STD

51.982–52.000 mm (2.0465–2.0472 in.)

U/S 0.25

51.745–51.755 mm (2.0372–2.0376 in.)

If the diameter is not as specified, check the oil clearance. (See steps 3 and 6 in cylinder block disassembly)

(b) Check each main journal and crank pin for taper and out–of–round as shown.

Maximum taper and out–of round:

0.02 mm (0.0008 in.)

If the taper or out–of–round is greater than maximum, grind or replace the crankshaft.

3. IF NECESSARY, GRIND AND HONE MAIN JOURNALS AND/OR CRANK PINS

Grind and hone the main journals and/or crank pins to the finished undersized diameter (See procedure step 2).

Install new main journal and/or crank pin undersized bearings.

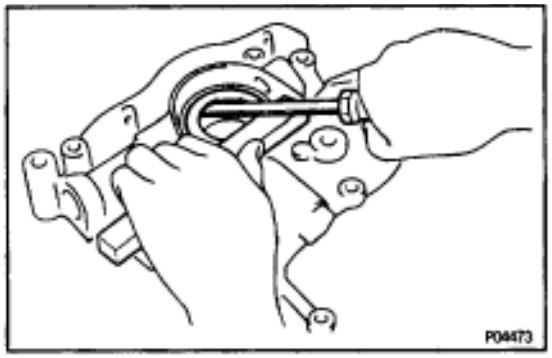

CRANKSHAFT OIL SEALS REPLACEMENT

HINT: There are 2 methods A and B to replace the oil seal as follows:

1. REPLACE CRANKSHAFT FRONT OIL SEAL

A. If oil pump is removed from cylinder block:

(a) Using a screwdriver, pry out the oil seal.

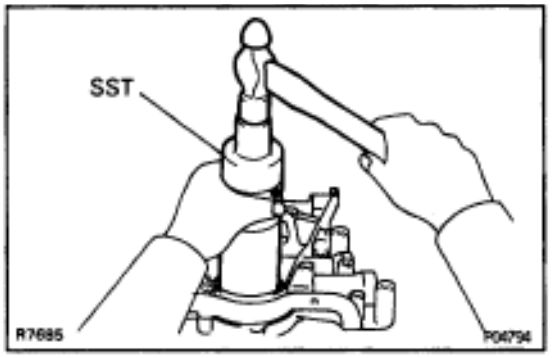

(b) Using SST and a hammer, tap in a new oil seal until its surface is flush with the oil pump body edge.
SST 09316–60010 (09316–00010)

(c) Apply MP grease to the oil seal lip.

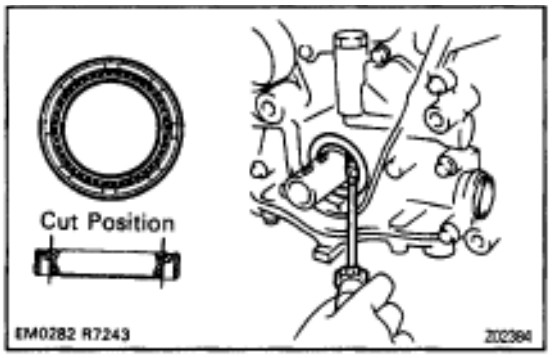

B. If oil pump is installed on cylinder block:

(a) Using a knife, cut off the oil seal lip.

(b) Using a screwdriver, pry out the oil seal.
NOTICE: Be careful not to damage the crankshaft. Tape the screwdriver tip.

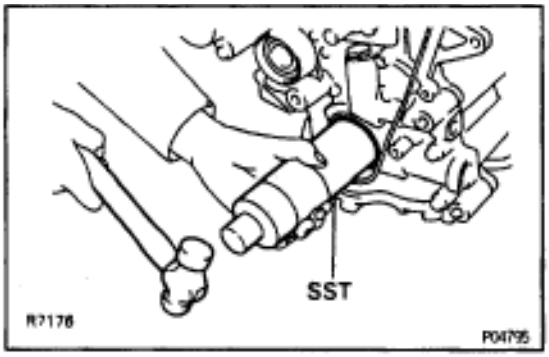

(c) Apply MP grease to a new oil seal lip.

(d) Using SST and a hammer, tap in the oil seal until its surface is flush with the oil pump body edge.
SST 09316–60010 (09316–00010)

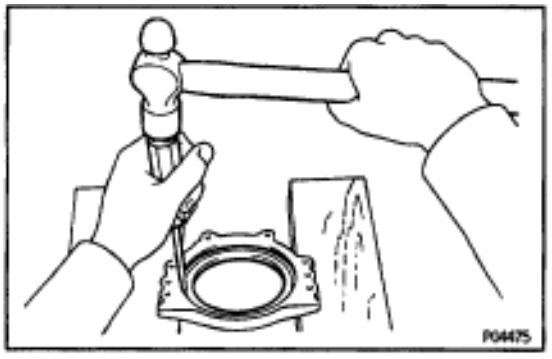

2. REPLACE CRANKSHAFT REAR OIL SEAL

A. If rear oil seal retainer is removed from cylinder block:

(a) Using a screwdriver and hammer, tap out the oil seal.

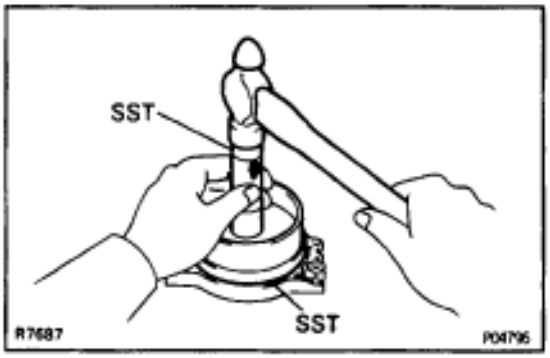

(b) Using SST and a hammer, tap in a new oil seal until its surface is flush with the rear oil seal retainer edge.
SST 09223–15030, 09608–30022 (09608–05010)
(c) Apply MP grease to the oil seal lip.

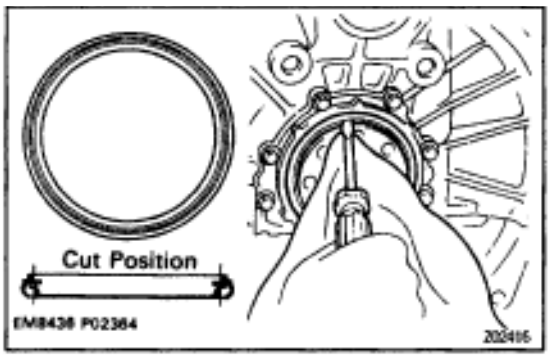

B. If rear oil seal retainer is installed on cylinder block:
(a) Using a knife, cut off the oil seal lip.
(b) Using a screwdriver, pry out the oil seal.
NOTICE: Be careful not to damage the crankshaft. Tape the screwdriver tip.

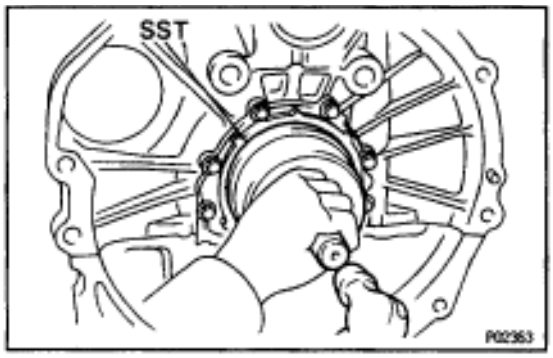

(c) Apply MP grease to a new oil seal lip.
(d) Using SST and a hammer, tap in the oil seal until its surface is flush with the rear oil seal retainer edge.
SST 09223–15030, 09608–30022 (09608–05010)

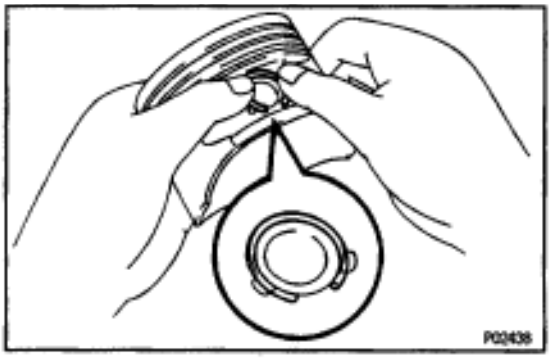

PISTON AND CONNECTING ROD ASSEMBLY

1. ASSEMBLE PISTON AND CONNECTING ROD

(a) Install a new snap ring at one end of the piston pin hole.
HINT: Be sure that end gap of the snap ring is not aligned with the pin hole cutout portion of the piston.

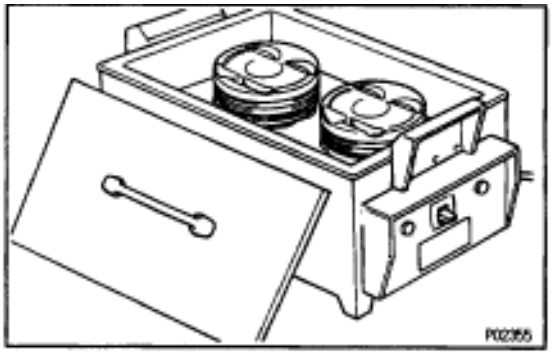

(b) Gradually heat the piston to about 80˚C (176˚F).

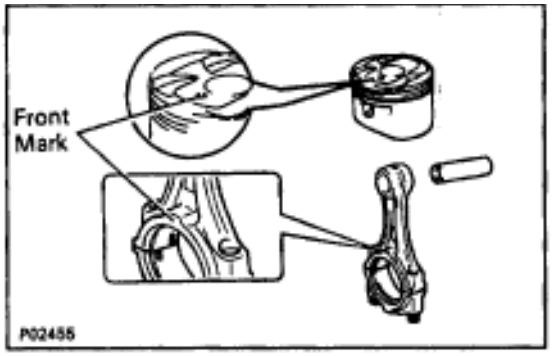

(c) Coat the piston pin with engine oil.
(d) Align the front marks of the piston and connecting rod, and push in the piston pin with your thumb.



(e) Install a new snap ring at the other end of the piston pin hole.
HINT: Be sure that end gap of the snap ring is not aligned with the pin hole cutout portion of the piston.

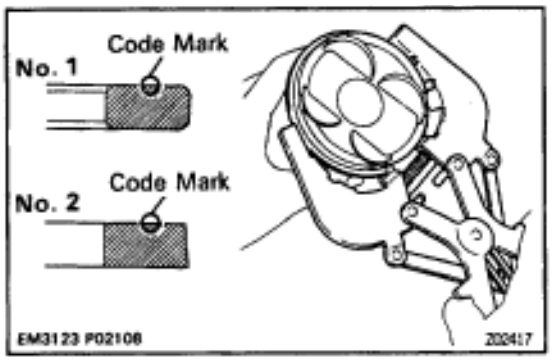

2. INSTALL PISTON RINGS
(a) Install the oil ring expander and 2 side rails by hand.
(b) Using a piston ring expander, install the 2 compression rings with the code mark facing up.
Code mark:
2JZ–GE
No.1 1T
No.2 2T
2JZ–GTE
No.1 1N
No.2 2N

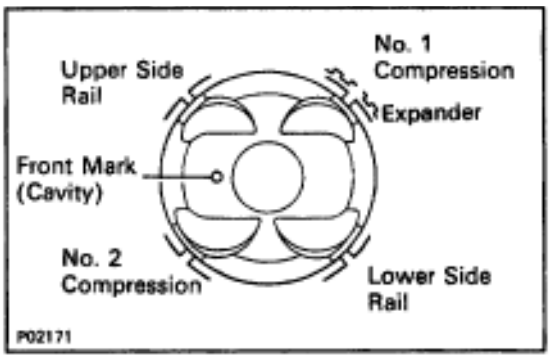

(c) Position the piston rings so that the ring ends are as shown.
NOTICE: Do not align the piston ring ends.

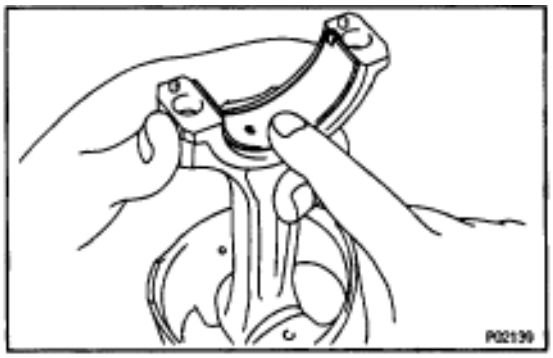

3. INSTALL BEARINGS
(a) Align the bearing claw with the groove of the connecting rod and connecting cap.
(b) Install the bearings in the connecting rod and connecting rod cap.

CYLINDER BLOCK ASSEMBLY

HINT:

- Thoroughly clean all parts to be assembled.
- Before installing the parts, apply new engine oil to all sliding and rotating surfaces.
- Replace all gaskets, O–rings and oil seals with new parts.

NOTICE: Apply a generous amount of oil on the sliding surface of the bearing, and not on the back of it or on the surface to which it is installed.

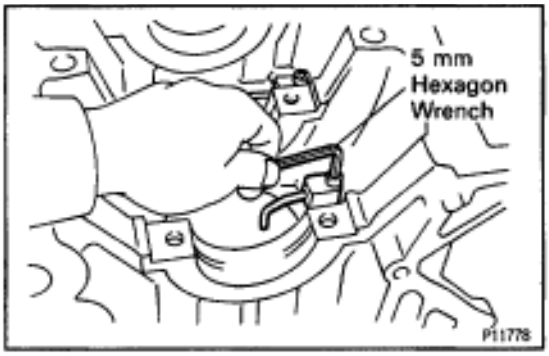

1. 2JZ–GTE:

INSTALL OIL NOZZLES (WITH RELIEF VALVES)

Using a 5 mm hexagon wrench, install the oil nozzle with the bolt. Install the 6 oil nozzles.

Torque: 8.8 N·m (90 kgf·cm, 78 in.·lbf)

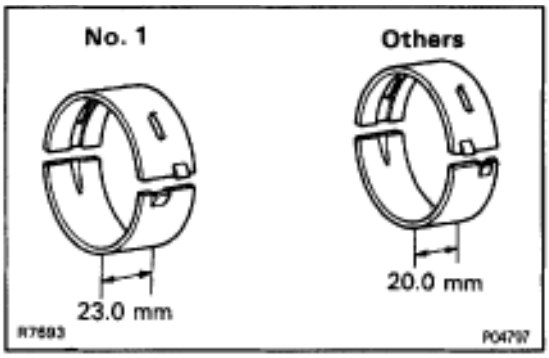

2. INSTALL MAIN BEARINGS

HINT:

- Main bearings come in widths of 20.0 mm (0.787 in.) and 23.0 mm (0.906 in.). Install the 23.0 mm bearings in the No.1 cylinder block journal position with the main bearing cap. Install the 20.0 mm bearings in the other positions.
- Upper bearings have an oil groove and oil holes; lower bearings do not.

(a) Align the bearing claw with the claw groove of the main bearing cap or cylinder block.

NOTICE: Install the bearing with the oil hole in the cylinder block.

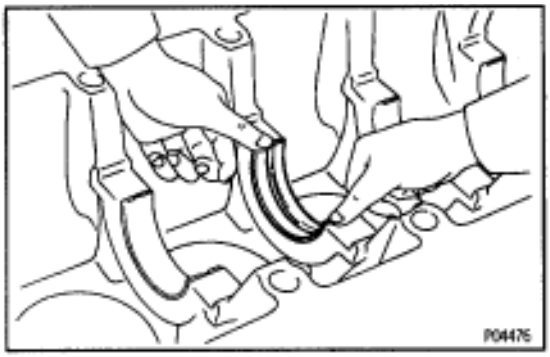

(b) Install the bearings in the cylinder block and main bearing caps.

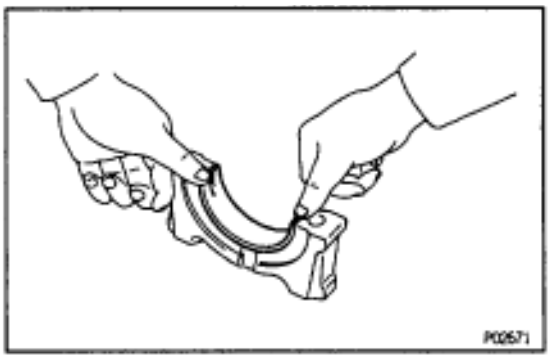

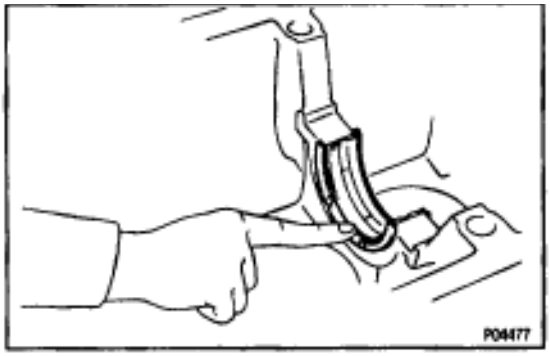

3. INSTALL UPPER THRUST WASHERS

Install the 2 thrust washers under the No.4 main journal position of the cylinder block with the oil grooves facing outward.

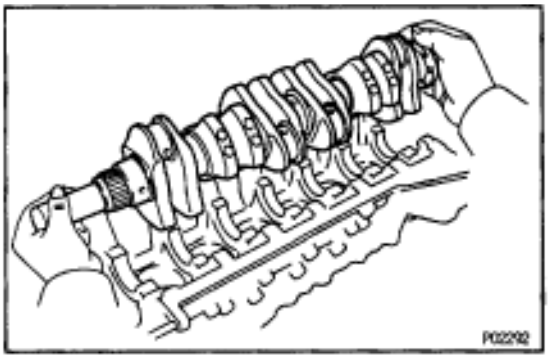

4. PLACE CRANKSHAFT ON CYLINDER BLOCK

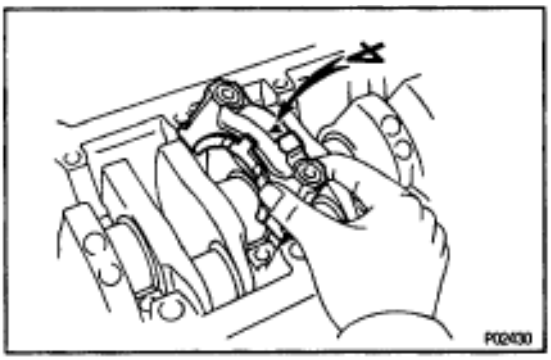

5. INSTALL MAIN BEARING CAP AND LOWER THRUST WASHERS

A. Place main bearing cap and lower thrust washers on cylinder block

(a) Install the lower thrust washers on the No.4 main bearing with the grooves facing outward.

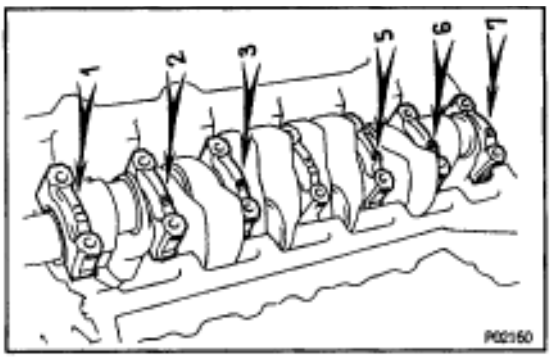

(b) Install the main bearing caps in numerical order with the arrows facing forward.

B. Install main bearing cap bolts

HINT:

- The main bearing cap bolts are tightened in 2 progressive steps (steps (b) and (d)).
- If any of the main bearing bolts break or deform, replace them.

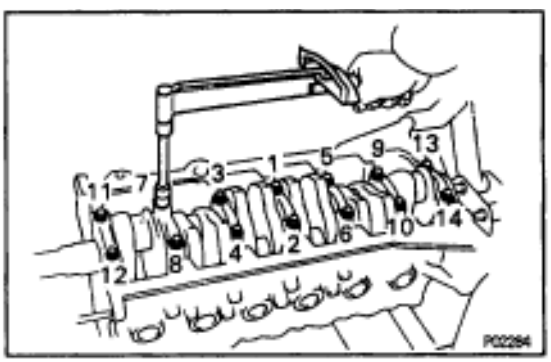

(a) Apply a light coat of engine oil on the threads and under the heads of the main bearing cap bolts.

(b) Install and uniformly tighten the 14 main bearing cap bolts, in several passes, in the sequence shown.

Torque: 44 N·m (450 kgf·cm, 33 ft·lbf)

If any one of the main bearing cap bolts does not meet the torque specification, replace the main bearing cap bolt.

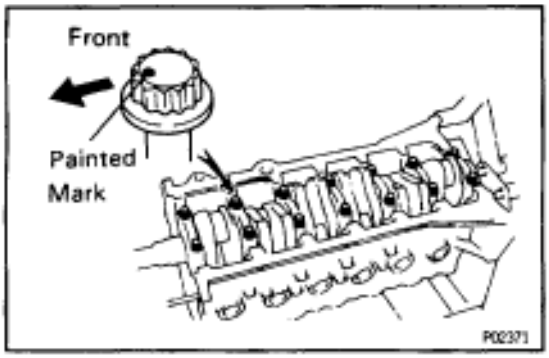

(c) Mark the front of the main bearing cap bolt head with paint.

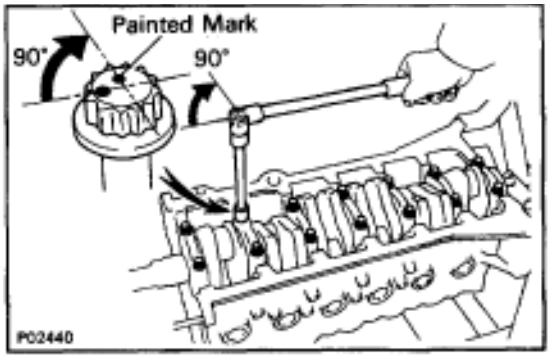

(d) Retighten the main bearing cap bolts 90° in the numerical order shown above.
(e) Check that the painted mark is now at a 90° angle to the front.
(f) Check that the crankshaft turns smoothly.

6. CHECK CRANKSHAFT THRUST CLEARANCE
(See step 5 in cylinder block disassembly)

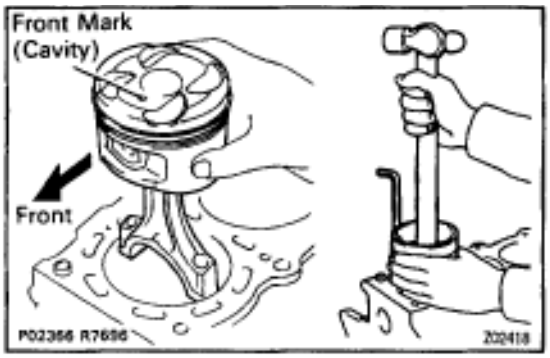

7. INSTALL PISTON AND CONNECTING ROD ASSEMBLIES
Using a piston ring compressor, push the correctly numbered piston and connecting rod assemblies into each cylinder with the front mark of the piston facing forward.

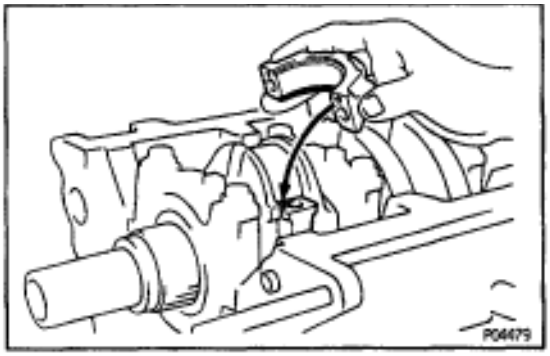

8. INSTALL CONNECTING ROD CAPS

A. Place connecting rod cap on connecting rod

(a) Match the numbered connecting rod cap with the connecting rod.
(b) Install the connecting rod cap with by aligning the dowel pin to the corrosponding hole.

B. Install connecting rod cap bolts

HINT:

- The connecting rod cap bolts are tightened in 2 progressive steps (steps (b) and (d)).
- If any of the connecting rod bolts break or deform, replace them.

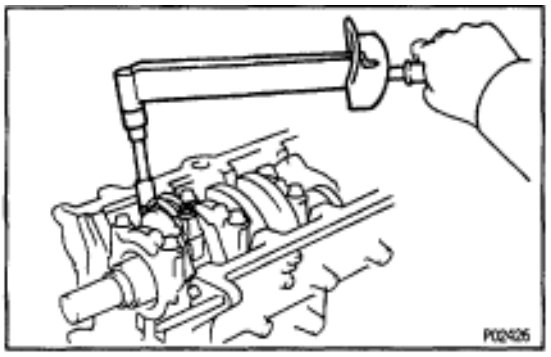

(a) Apply a light coat of engine oil on the threads and under the heads of the connecting rod cap bolts.
(b) At first, install and alternately tighten the bolts of the connecting rod cap in several passes.
Torque: 29 N·m (300 kgf·cm, 22 ft·lbf)
If any one of the connecting rod cap bolts does not meet the torque specification, replace the cap bolt.

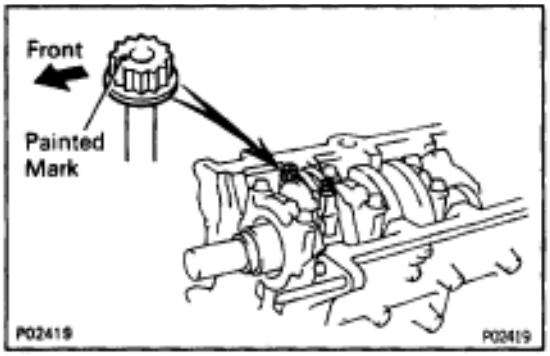

(c) Mark the front of the connecting rod cap bolt with paint.

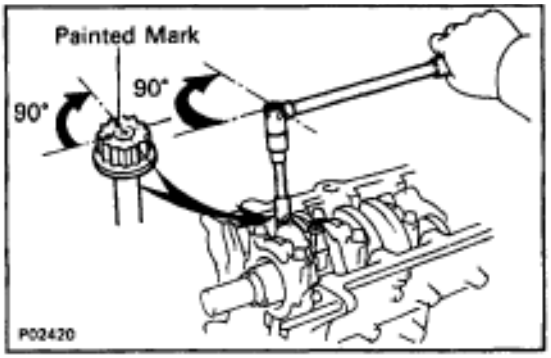

(d) Retighten the connecting rod cap bolts 90° in the numerical order shown.
(e) Check that the painted mark is now at a 90° angle to the front.
(f) Check that the crankshaft turns smoothly.

9. CHECK CONNECTING ROD THRUST CLEARANCE (See step 2 in cylinder block disassembly)

10. INSTALL REAR OIL SEAL RETAINER

(a) Remove any old packing (FIPG) material and be careful not to drop any oil on the contact surfaces of the retainer and cylinder block.
- Using a razor blade and gasket scraper, remove all the old packing (FIPG) material from the gasket surfaces and sealing groove.
- Thoroughly clean all components to remove all debris.
- Using a non–residue solvent, clean both sealing surfaces.

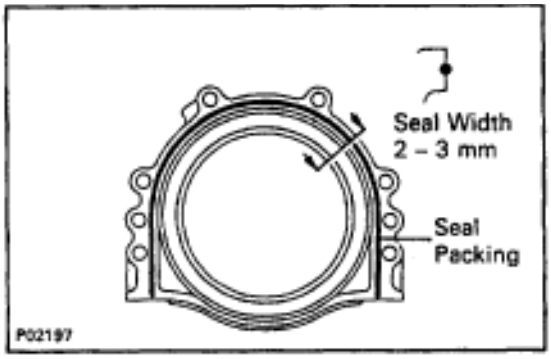

(b) Apply seal packing to the retainer as shown in the illustration.
Seal packing:
Part No. 08826–00080 or equivalent
- Install a nozzle that has been cut to a 2–3 mm (0.08–0.12 in.) opening.
- Parts must be assembled within 3 minutes of application. Otherwise the material must be removed and reapplied.
- Immediately remove nozzle from the tube and reinstall cap.

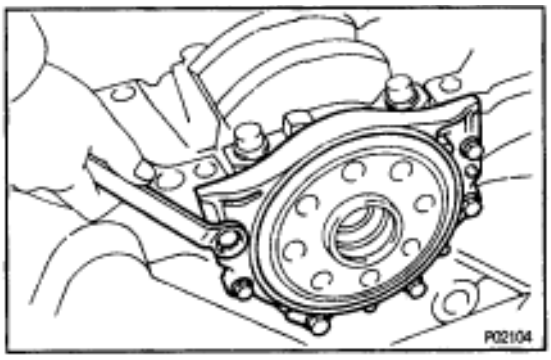

(c) Install the retainer with the 6 bolts.
Torque: 5.9 N·m (60 kgf·cm, 52 in.·lbf)

AFTER ASSEMBLY

1. INSTALL OIL PUMP
(See oil pump installation in Lubrication System)

2. INSTALL WATER PUMP
(See water pump installation in Cooling System)

3. 2JZ–GTE:
INSTALL CRANKSHAFT POSITION SENSOR
Torque: 8.8 N·m (90 kgf·cm, 78 in.·lbf)

4. INSTALL RH ENGINE MOUNTING BRACKET AND INSULATOR ASSEMBLY
HINT: The RH mounting bracket is marked "A ← EX".
Torque: 58 N·m (590 kgf·cm, 43 ft·lbf)

5. INSTALL ENGINE COOLANT DRAIN PLUG
Torque: 29 N·m (300 kgf·cm, 22 ft·lbf)

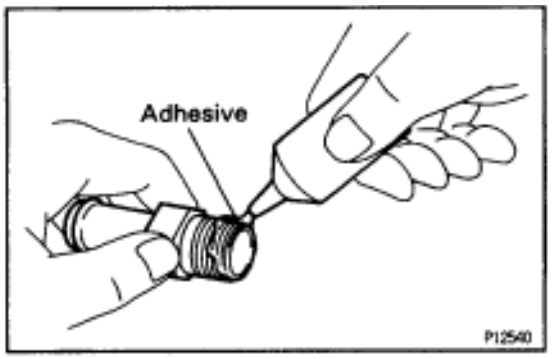

6. 2JZ–GTE:
INSTALL UNION FOR OIL COOLER HOSE

(a) Apply adhesive to 2 or 3 threads of the union.
Adhesive:
Part No. 08833–00070, THREE BOND 1324, or equivalent

(b) Install the union.
Torque: 39 N·m (400 kgf·cm, 29 ft·lbf)

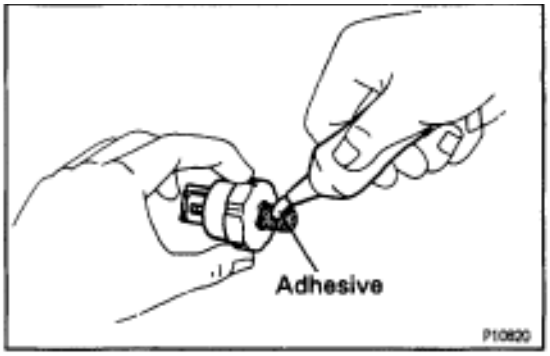

7. INSTALL KNOCK SENSORS AND OIL PRESSURE SWITCH

(a) Apply adhesive to 2 or 3 threads of the oil pressure switch.
Adhesive:
Part No. 08833–00080, THREE BOND 1344, LOCTITE 242 or equivalent

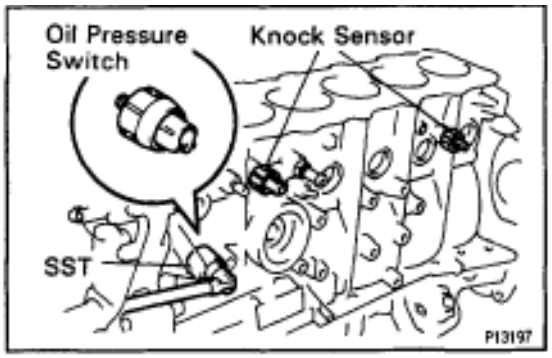

(b) Using SST, install the 2 knock sensors and oil pressure switch.
SST 09816–30010
Torque:
Knock sensor
44 N·m (450 kgf·cm, 33 ft·lbf)
Oil pressure switch
14 N·m (150 kgf·cm, 11 ft·lbf)

8. INSTALL FUEL PIPE SUPPORT
Torque: 14 N·m (145 kgf·cm, 10 ft·lbf)

9. INSTALL LH ENGINE MOUNTING BRACKET AND INSULATOR ASSEMBLY
HINT: LH mounting bracket is marked ”A ← IN”.
Torque: 58 N·m (590 kgf·cm, 43 ft·lbf)

10. INSTALL OIL FILTER BRACKET
(a) Check and clean the oil filter bracket installation.
(b) Place a new O–ring in position on the oil filter bracket.
(c) Apply clean engine oil to the O–ring.
(d) Install a new gasket to the union bolt.
(e) Install the oil filter braket with the union bolt.
Torque: 88 N·m (900 kgf·cm, 65 ft·lbf)

11. INSTALL NO.2 WATER BYPASS PIPE
(a) Install a new gasket to the water pump.
(b) 2JZ–GE:
Install the water bypass pipe with the bolt and 2 nuts.
Torque: 21 N·m (210 kgf·cm, 15 ft·lbf)
(c) 2JZ–GTE:
Install the water bypass pipe with the 2 bolts and 2 nuts.
Torque: 21 N·m (210 kgf·cm, 15 ft·lbf)

12. 2JZ–GTE:
INSTALL OIL COOLER
(See oil cooler installation in Lubrication System)

13. INSTALL OIL FILTER
(See oil and filter replacement in Lubrication System)

14. INSTALL CYLINDER HEAD
(See cylinder head installation)

15. INSTALL TIMING PULLEYS AND BELT
(See timing belt installation)

16. INSTALL GENERATOR
(See generator installation in Charging System)

17. REMOVE ENGINE STAND FROM ENGINE

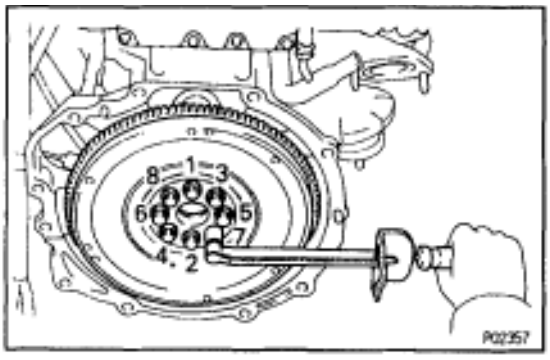

18. M/T:
INSTALL FLYWHEEL
HINT: The flywheel bolts are tightened in 2 progressive step, (b) and (d).
(a) Install the flywheel on the crankshaft.
(b) Install and uniformly tighten the 8 bolts, in several passes, in the sequence shown.
Torque: 49 N·m (500 kgf·cm, 36 ft·lbf)

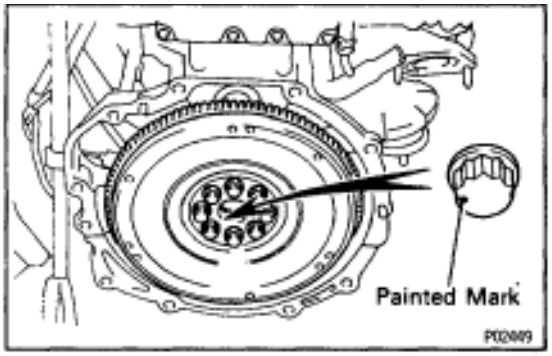

(c) Mark the flywheel bolt with paint.

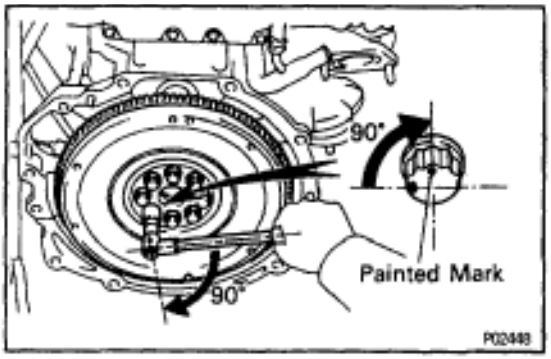

(d) Retighten the flywheel bolts by an additional 90°.
(e) Check that the painted mark is now at a 90° angle to (d).

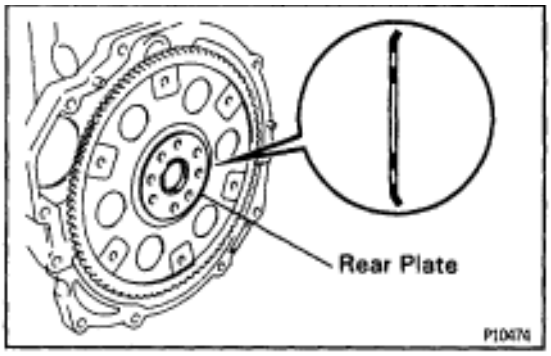

19. A/T:
INSTALL DRIVE PLATE

(a) Install the front spacer, drive plate and rear plate on the crankshaft.
Adhesive:
Part No. 08833–00070, THREE BOND 1324 or equivalent

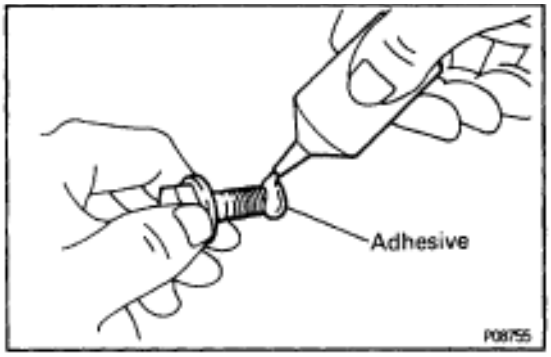

(b) Apply adhesive to 2 or 3 threads of the mounting bolt end.

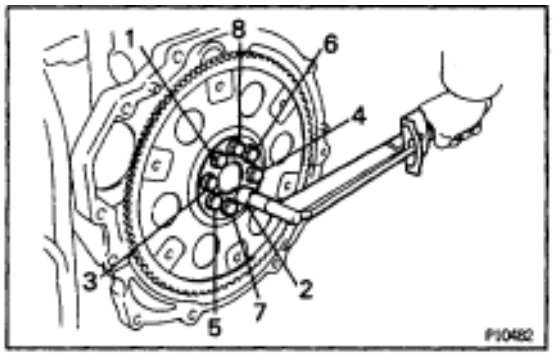

(c) Install and uniformly tighten the 8 bolts, in several passes, in the sequence shown.
Torque: 83 N·m (850 kgf·cm, 61 ft·lbf)

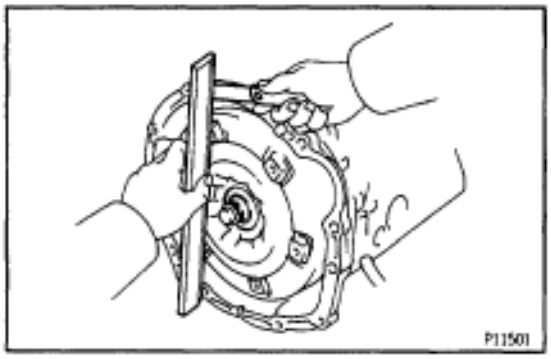

ENGINE & TRANSMISSION ASSEMBLY

1. A/T:

CHECK TORQUE CONVERTER CLUTCH INSTALLATION

Using calipers and straight edge, measure from the installed surface of the torque converter clutch to the front surface of the transmission.

Correct distance:

Less than 0.1 mm (0.004 in.)

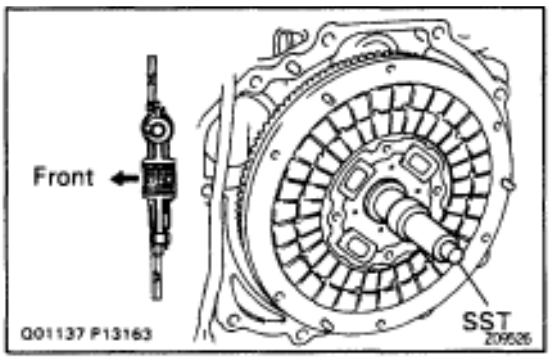

If the distance is not as specified, check for an improper installation.

2. 2JZ–GE M/T:

INSTALL CLUTCH DISC AND COVER

(a) Insert SST in the clutch disc, and then set them and the cover in position.
SST 09301–00110

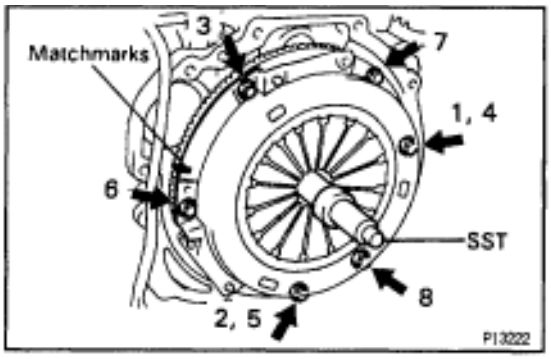

(b) Align the matchmarks on the clutch cover and flywheel.

(c) Tighten the bolts evenly and gradually while pushing SST. Make several passes around the cover until it is snug.
SST 09301–00110

(d) Torque the bolts on the clutch cover in the order shown.
Torque: 19 N·m (195 kgf·cm, 14 ft·lbf)

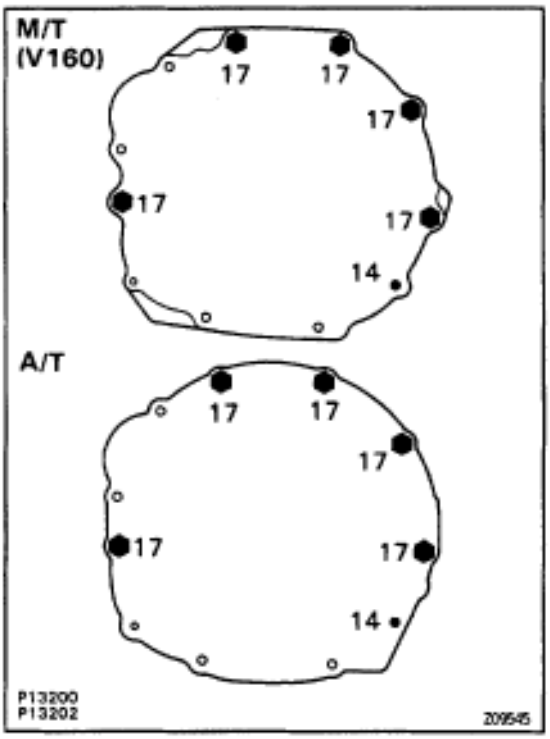

3. ASSEMBLE ENGINE AND TRANSMISSION

(a) M/T:
Align the input spline with the clutch disc and install the transmission to the engine.

(b) Align the 2 knock pins on the cylinder block with the pin holes of the clutch housing.

(c) Install the transmission with the 6 bolts.
Torque:
14 mm head
39 N·m (400 kgf·cm, 29 ft·lbf)
17 mm head
72 N·m (730 kgf·cm, 43 ft·lbf)

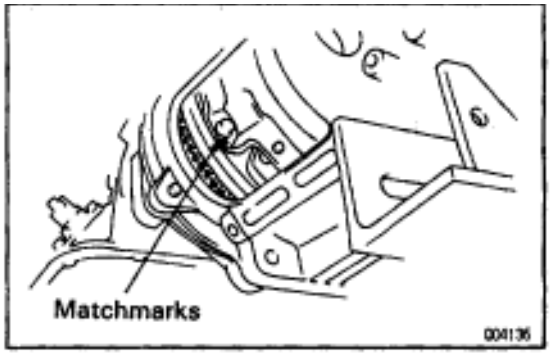

4. 2JZ–GTE M/T:

INSTALL CLUTCH COVER SET BOLTS

(a) Align the matchmarks.

(b) Install the 6 bolts while turning the crankshaft to gain access. Tighten the bolts evenly.

Torque: 19 N·m (195 kgf·cm, 14 ft·lbf)

(c) Install the service hole cover with the 2 bolts.

Torque: 12 N·m (120 kgf·cm, 9 ft·lbf)

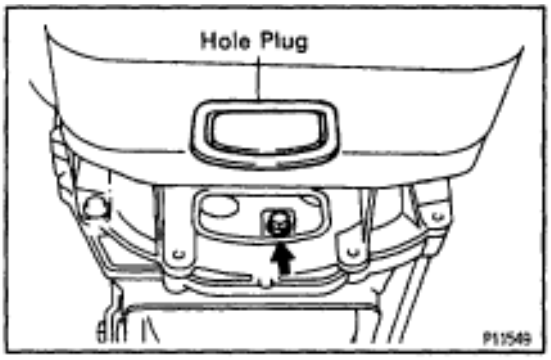

5. A/T:

INSTALL TORQUE CONVERTER CLUTCH MOUNTING BOLTS

(a) First, install the gray bolt. Then install 5 black bolts while turning the crankshaft to gain access. Tighten the bolts evenly.

Torque: 33 N·m (340 kgf·cm, 25 ft·lbf)

(b) Install the hole plug.

6. 2JZ–GE A/T:

CONNECT THROTTLE CABLE

7. A/T:

INSTALL OIL COOLER TUBES FOR TRANSMISSION

(a) Temporarily install the 2 oil cooler tubes, 2 hose clamps and tube clamp with 3 clamp bolts.

(b) Connect the 2 oil cooler tubes to the unions on the transmission. Tighten the union nuts.

Torque: 34 N·m (350 kgf·cm, 25 ft·lbf)

(c) Tighten the 3 clamp bolts.

8. INSTALL STARTER

9. CONNECT ENGINE WIRE TO TRANSMISSION

10. A/T:

INSTALL OIL DIPSTICK GUIDE AND DIPSTICK FOR TRANSMISSION

(a) Install a new O–ring to the dipstick guide.

(b) Apply soapy water to the O–ring.

(c) Connect the dipstick guide end to the dipstick tube of the oil pan.

(d) Install the dipstick guide with the bolt.

(e) Install the dipstick.

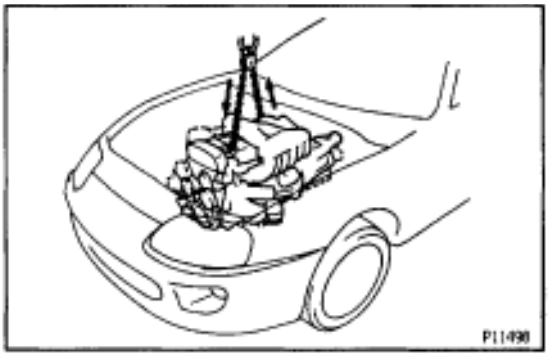

ENGINE INSTALLATION (2JZ–GE)

1. INSTALL ENGINE AND TRANSMISSION ASSEMBLY IN VEHICLE

(a) Attach the engine hoist chain to the engine hangers.

(b) Lower the engine and transmission assembly into the engine compartment.

NOTICE: Install the engine and transmission assembly carefully without damaging the shift lever retainer (M/ T), A/C compressor and PS solenoid valve.

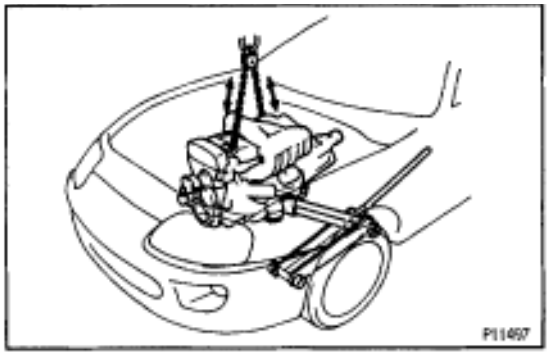

(c) Insert the stud bolts of the front engine mounting insulators into the stud bolt holes of the front suspension crossmember.

(d) Temporarily install the 2 nuts holding the engine front mounting insulators to the front suspension crossmember.

(e) Keep the engine level with a jack.

(f) Remove the hoist chain.

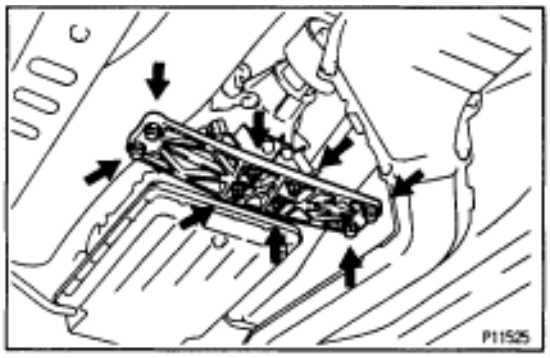

(g) Temporarily install the support member to the engine rear mounting insulator with the 4 nuts.

(h) Install the 4 bolts holding the support member to the body.
Torque: 25 N·m (260 kgf·cm, 19 ft·lbf)

(i) Tighten the 4 nuts holding the support member to the engine rear mounting insulator.
Torque: 13 N·m (135 kgf·cm, 10 ft·lbf)

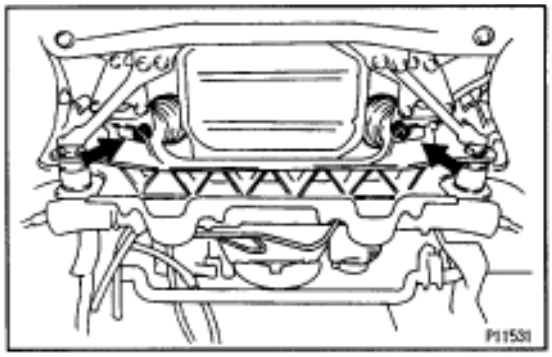

(j) Tighten the 2 nuts holding the engine front mounting insulators to the front suspension crossmember.
Torque: 59 N·m (600 kgf·cm, 43 ft·lbf)

2. M/T:
INSTALL TRANSMISSION SHIFT LEVER
Torque: 19 N·m (195 kgf·cm, 14 ft·lbf)

3. INSTALL PROPELLER SHAFT
(See propeller shaft installation in Propeller Shaft)

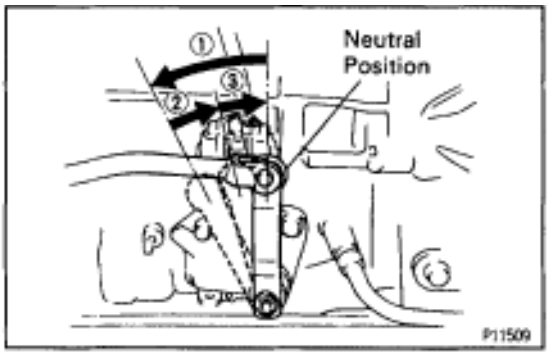

4. A/T:
CONNECT TRANSMISSION CONTROL ROD

(a) Shift the shift lever to N position.

(b) Fully turn the control shaft lever back and return 2 notches. It is now in neutral position.

(c) Connect the control rod to the shift lever with the nut.
Torque: 13 N·m (130 kgf·cm, 9 ft·lbf)

5. INSTALL EXHAUST PIPE HEAT INSULATOR

6. INSTALL NO.2 FRONT EXHAUST PIPE

(a) Install 2 new gaskets and the No.2 front exhaust pipe to the exhaust manifold with 4 new nuts.
Torque: 62 N·m (630 kgf·cm, 46 ft·lbf)

(b) Install the pipe support bracket with the 2 bolts.
Torque: 43 N·m (440 kgf·cm, 32 ft·lbf)

(c) Install a new gasket and the No.2 front exhaust pipe to the front exhaust pipe with the 2 bolts and 2 new nuts.
Torque: 58 N·m (590 kgf·cm, 43 ft·lbf)

7. M/T:
INSTALL CLUTCH RELEASE CYLINDER AND GROUND STRAP

(a) Install the clutch release cylinder with the 2 bolts.
Torque: 13 N·m (130 kgf·cm, 9 ft·lbf)

(b) Install the ground strap with the bolt.
Torque: 37 N·m (380 kgf·cm, 27 ft·lbf)

8. M/T:
INSTALL UPPER CONSOLE PANEL, SHIFT LEVER BOOTS AND HOLDING BOLTS

9. CONNECT ENGINE WIRE TO CABIN

(a) Push in the engine wire through the cowl panel.
NOTICE: Be careful not to damage the engine wire.

(b) Connect the connector to the connector cassette.

(c) Connect the connector to the instrament panel wire connector.

(d) Connect the 2 connectors to the ECM.

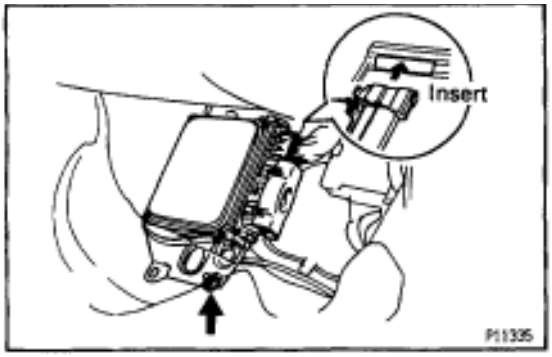

(e) Insert the ECM bracket into the stay on the floor panel.

(f) Install the ECM with the nut.

(g) Install the ECM protector with the 2 nuts.

(h) Install the floor carpet.

(i) Install the scuff plate.

10. CONNECT ENGINE WIRE TO COWL PANEL

11. INSTALL A/C COMPRESSOR

(a) Using a torx socket (E10), install the stud bolt and compressor.
Torque: 26 N·m (265 kgf·cm, 19 ft·lbf)

(b) Connect the compressor connector.

(c) Temporarily install the compessor with the nut and 2 bolts.

(d) Alternately tighten the nut and 2 bolts.
Torque: 52 N·m (530 kgf·cm, 38 ft·lbf)

12. INSTALL PS PRESSURE TUBE
Install the pressure tube with the 2 clamp bolts.

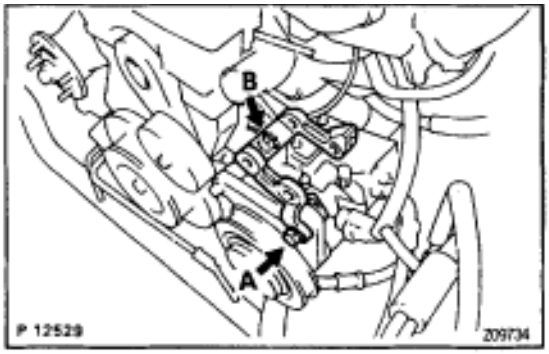

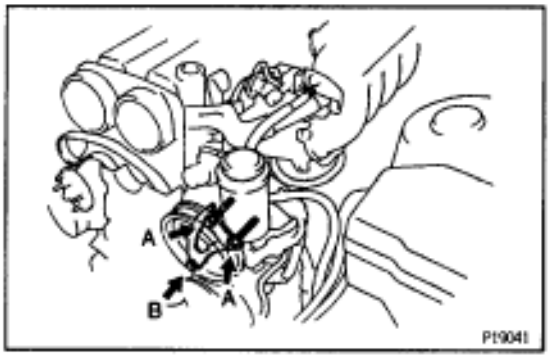

13. INSTALL PS PUMP

(a) Install the pump bracket with the 2 bolts.
Torque:
A 58 N·m (590 kgf·cm, 43 ft·lbf)
B 39 N·m (400 kgf·cm, 29 ft·lbf)

(b) Install the pump rear stay with the 2 bolts.
Torque: 39 N·m (400 kgf·cm, 29 ft·lbf)

(c) Install the pump housing to the pump bracket.

(d) Connect the following hoses:
- Air hose to No.4 timing belt cover
- Air hose to air intake chamber

(e) Install the front pump bracket with the 2 bolts (A).
Torque: 58 N·m (590 kgf·cm, 43 ft·lbf)

(f) Install the plate washer and bolt (B) to the oil pump.
Torque: 52 N·m (530 kgf·cm, 38 ft·lbf)

14. INSTALL ENGINE WIRE BRACKET

15. CONNECT FUEL HOSES

(a) Connect the fuel return hose to the fuel return pipe.

(b) Install the fuel return hose to the clamp of the oil dipstick guide.

(c) Install the fuel inlet hose with 2 new gaskets and the union bolt.
Torque: 29 N·m (300 kgf·cm, 22 ft·lbf)

16. CONNECT WIRES AND CONNECTORS

17. CONNECT EVAP HOSE

18. CONNECT BRAKE BOOSTER VACUUM HOSE

19. CONNECT HEATER HOSES

20. INSTALL CHARCOAL CANISTER

21. INSTALL WATER PUMP PULLEY, FAN, FLUID COUPLING ASSEMBLY AND DRIVE BELT
(See step 10 in water pump installation in Cooling System)

22. INSTALL AIR CLEANER, VAF METER AND INTAKE AIR CONNECTOR PIPE ASSEMBLY

23. CONNECT CONTROL CABLES TO THROTTLE BODY

24. FILL WITH FUEL

25. FILL WITH ENGINE OIL

26. CHECK IGNITION TIMING
(See ignition timing inspection and adjustment)

27. INSTALL RADIATOR ASSEMBLY
(See radiator installation in Cooling System)

28. START ENGINE AND CHECK FOR LEAKS

29. INSTALL HOOD

30. ROAD TEST VEHICLE
Check for abnormal noise, shock slippage, correct shift points and smooth operation.

31. RECHECK ENGINE COOLANT AND ENGINE OIL LEVELS

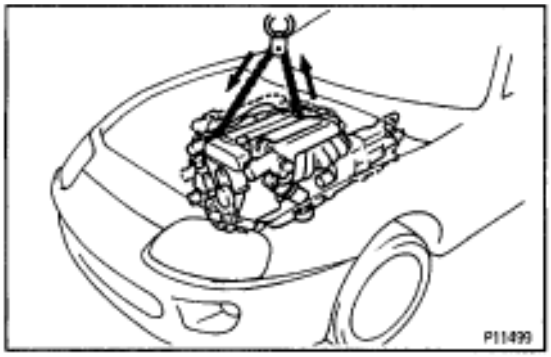

ENGINE INSTALLATION (2JZ–GTE)

1. INSTALL ENGINE AND TRANSMISSION ASSEMBLY IN VEHICLE

(a) Attach the engine hoist chain to the engine hangers.

(b) Lower the engine and transmission assembly into the engine compartment.

NOTICE: Install the engine and transmission assembly carefully without damaging the shift lever retainer (M/T), A/C compressor and PS solenoid valve.

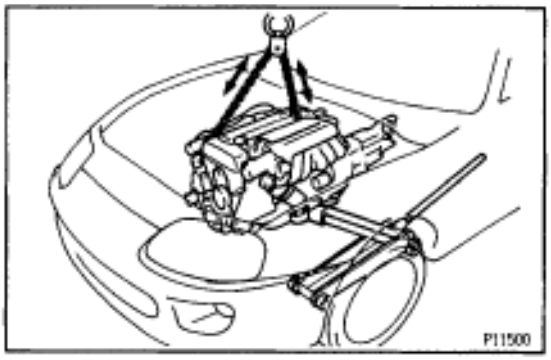

(c) Insert the stud bolts of the front engine mounting insulators into the stud bolt holes of the front suspension crossmember.

(d) Temporarily install the 2 nuts holding the engine front mounting insulators to the front suspension crossmember.

(e) Keep the engine level with a jack.

(f) Remove the hoist chain.

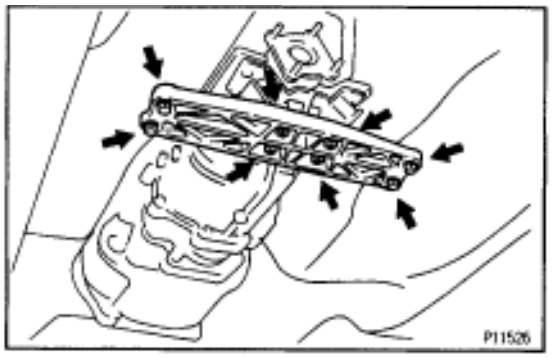

(g) Temporarily install the support member to the engine rear mounting insulator with the 4 nuts.

(h) Install the 4 bolts holding the support member to the body.
Torque: 25 N·m (260 kgf·cm, 19 ft·lbf)

(i) Tighten the 4 nuts holding the support member to the engine rear mounting insulator.
Torque: 13 N·m (135 kgf·cm, 10 ft·lbf)

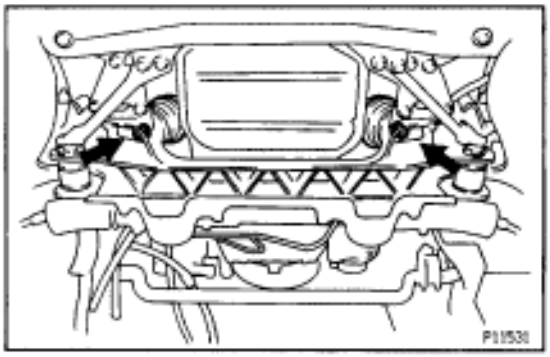

(j) Tighten the 2 nuts holding the engine front mounting insulators to the front suspension crossmember.
Torque: 59 N·m (600 kgf·cm, 43 ft·lbf)

2. M/T:
INSTALL TRANSMISSION SHIFT LEVER
Torque: 19 N·m (195 kgf·cm, 14 ft·lbf)

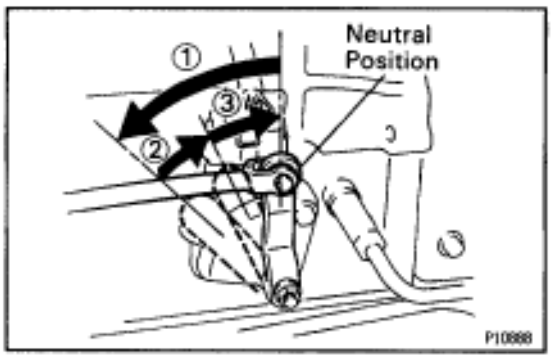

3. A/T:
CONNECT TRANSMISSION CONTROL ROD

(a) Shift the shift lever to N position.

(b) Fully turn the control shaft lever back and return 2 notches. It is now in neutral position.

(c) Connect the control rod to the shift lever with the nut.
Torque: 13 N·m (130 kgf·cm, 9 ft·lbf)

4. INSTALL PROPELLER SHAFT
(See propeller shaft installation in Propeller Shaft)

5. INSTALL REAR CENTER FLOOR CROSSMEMBER BRACE

Torque: 28 N·m (290 kgf·cm, 21 ft·lbf)

6. INSTALL EXHAUST PIPE HEAT INSULATOR

7. INSTALL NO.2 FRONT EXHAUST PIPE

Install a new gasket and the front exhaust pipe with 3 new nuts.

Torque: 62 N·m (630 kgf·cm, 46 ft·lbf)

8. INSTALL EXHAUST PIPE ASSEMBLY

(a) Install the hook of the tailpipe to the 2 rings on the tailpipe bracket.

(b) Install the hook of the exhaust pipe to the 2 rings on the exhaust pipe brackets.

(c) Install the pipe support bracket with the 2 bolts.

Torque: 43 N·m (440 kgf·cm, 32 ft·lbf)

(d) Install a new gasket and the No.2 front exhaust pipe to the front exhaust pipe with the 2 bolts and 2 new nuts.

Torque: 58 N·m (590 kgf·cm, 43 ft·lbf)

9. INSTALL SUB HEATED OXYGEN SENSOR

Install a new gasket, the oxygen sensor and sensor cover with the 2 nuts.

Torque: 18 N·m (180 kgf·cm, 13 ft·lbf)

10. M/T:

INSTALL CLUTCH RELEASE CYLINDER AND GROUND STRAP

(a) Install the clutch release cylinder with the 2 bolts.

Torque: 13 N·m (130 kgf·cm, 9 ft·lbf)

(b) Connect the clutch line tube with the bolt.

Torque: 37 N·m (380 kgf·cm, 27 ft·lbf)

(c) Install the ground strap with the bolt.

Torque: 37 N·m (380 kgf·cm, 27 ft·lbf)

11. CONNECT ENGINE WIRE TO CABIN

(a) Push in the engine wire through the cowl panel.

NOTICE: Be careful not to damage the engine wire.

(b) Connect the 2 connectors to the connector cassette.

(c) Connect the connector to the instrument panel wire connector.

(d) Connect the 2 connectors to the ECM.

(e) Connect the connector to the TRAC ECU.

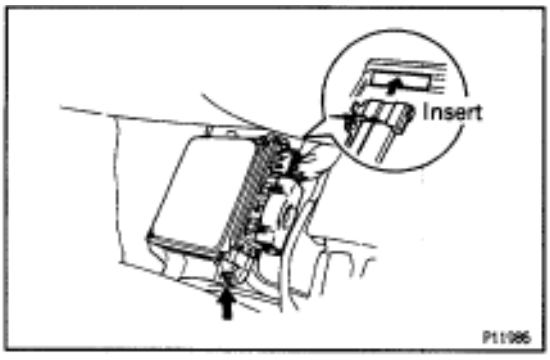

(f) Insert the ECM bracket into the stay on the floor panel.

(g) Install the ECM with the nut.

(h) Install the ECM protector with the 2 nuts.

(i) Install the floor carpet.

(j) Install the scuff plate.

12. M/T:

INSTALL UPPER CONSOLE PANEL, SHIFT LEVER BOOTS AND HOLDING BOLTS

13. CONNECT ENGINE WIRE TO COWL PANEL

14. INSTALL A/C COMPRESSOR

(a) Using a torx socket (E10), install the stud bolt and and compressor.
Torque: 26 N·m (265 kgf·cm, 19 ft·lbf)

(b) Connect the compressor connector.

(c) Temporarily install the compressor with nut and 3 bolts.

(d) Alternately tighten the bolt and nut.
Torque: 52 N·m (530 kgf·cm, 38 ft·lbf)

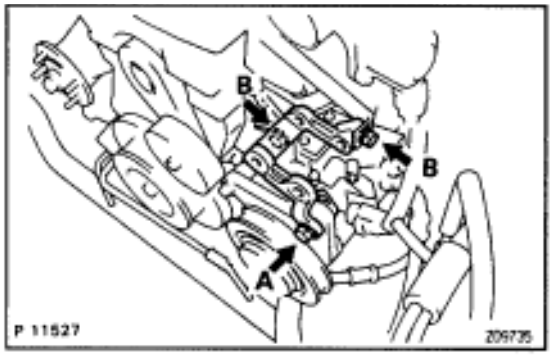

15. INSTALL PS PRESSURE TUBE

16. INSTALL PS PUMP

(a) Install the pump bracket with the 3 bolts.
Torque:
A 58 N·m (590 kgf·cm, 43 ft·lbf)
B 39 N·m (400 kgf·cm, 29 ft·lbf)

(b) Install the pump housing with the 2 bolts.
Torque: 58 N·m (590 kgf·cm, 43 ft·lbf)

(c) Connect these hoses:
- Air hose to throttle body
- Air hose to air intake chamber

17. CONNECT FUEL HOSES

(a) Connect the fuel return hose to the fuel return pipe.

(b) Install the fuel return hose to the clamp of the dipstick guide.

(c) Install the fuel inlet hose with 2 new gaskets and the union bolt.
Torque: 29 N·m (300 kgf·cm, 22 ft·lbf)

18. CONNECT WIRES AND CONNECTORS

19. CONNECT EVAP HOSE

20. CONNECT BRAKE BOOSTER VACUUM HOSE

21. CONNECT HEATER WATER HOSES

22. INSTALL CHARCOAL CANISTER

23. INSTALL WATER PUMP PULLEY, FAN, FLUID COUPLING ASSEMBLY AND DRIVE BELT
(See step 10 in water pump installation in Cooling System)

24. M/T:
INSTALL DRIVE BELT TENSIONER DAMPER
(See step 19 timing belt installation)

25. INSTALL AIR CLEANER AND MAF METER ASSEMBLY

26. INSTALL NO.1 AIR HOSE

27. CONNECT CONTROL CABLES TO THROTTLE BODY

28. FILL WITH FUEL

29. FILL WITH ENGINE OIL

30. START ENGINE AND CHECK FOR LEAKS

31. **CHECK IGNITION TIMING**
    (See ignition timing inspection)
32. **INSTALL RADIATOR ASSEMBLY**
    (See radiator installation in Cooling System)
33. **INSTALL HOOD**
34. **ROAD TEST VEHICLE**
    Check for abnormal noise, shock slippage, correct shift points and smooth operation.
35. **RECHECK ENGINE COOLANT AND ENGINE OIL LEVELS**

EXHAUST SYSTEM COMPONENTS

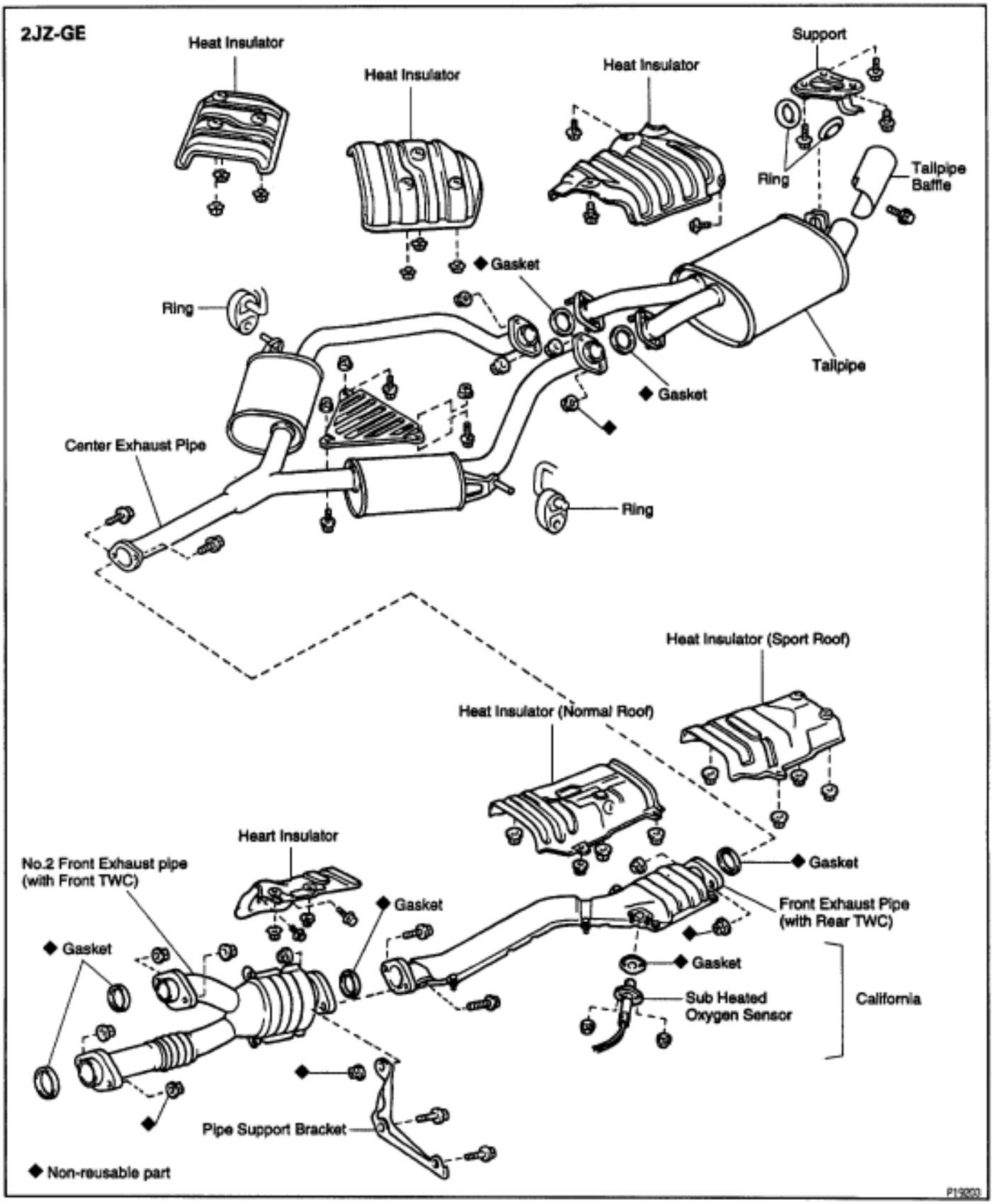

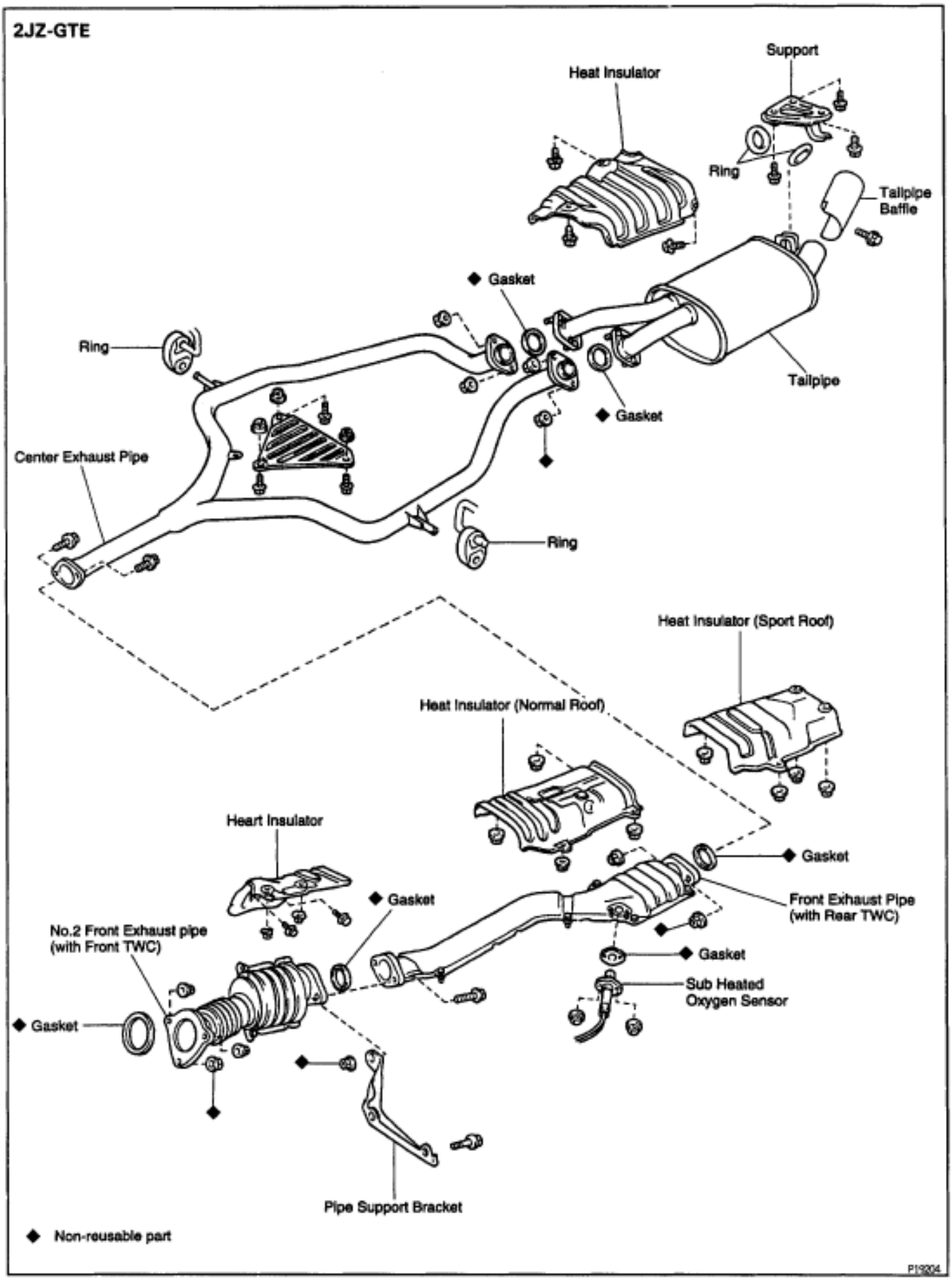
2JZ-GTE
Support
Heat Insulator
Ring
Tailpipe Baffle
◆ Gasket
Ring
Tailpipe
◆ Gasket
Center Exhaust Pipe
Ring
Heat Insulator (Sport Roof)
Heat Insulator (Normal Roof)
Heart Insulator
◆ Gasket
◆ Gasket
Front Exhaust Pipe (with Rear TWC)
No.2 Front Exhaust pipe (with Front TWC)
◆ Gasket
◆ Gasket
Sub Heated Oxygen Sensor
Pipe Support Bracket
◆ Non-reusable part
P19204

SERVICE SPECIFICATIONS
SERVICE DATA

Compression pressure	at 250 rpm STD 2JZ–GE		1,275 kPa (13.0 kgf/cm^2, 185 psi) or more
	2JZ–GTE		1,079 kPa (11.0 kgf/cm^2, 156 psi) or more
	Minimum 2JZ–GE		1,079 kPa (11.0 kgf/cm^2, 156 psi)
	2JZ–GTE		883 kPa (9.0 kgf/cm^2, 128 psi)
	Difference of pressure between each cylinder		98 kPa (1.0 kgf/cm^2, 14 psi) or less
Valve clearance	at cold Intake		0.15–0.25 mm (0.006–0.010 in.)
	Exhaust		0.25–0.35 mm (0.010–0.014 in.)
	Adjusting shim (for repair part)	Mark 2500	2.500 mm (0.0984 in.)
		Mark 2.550	2.550 mm (0.1004 in.)
		Mark 2.600	2.600 mm (0.1024 in.)
		Mark 2.650	2.650 mm (0.1043 in.)
		Mark 2.700	2.700 mm (0.1063 in.)
		Mark 2.750	2.750 mm (0.1083 in.)
		Mark 2.800	2.800 mm (0.1102 in.)
		Mark 2.850	2.850 mm (0.1122 in.)
		Mark 2.900	2.900 mm (0.1142 in.)
		Mark 2.950	2.950 mm (0.1161 in.)
		Mark 3.000	3.000 mm (0.1181 in.)
		Mark 3.050	3.050 mm (0.1201 in.)
		Mark 3.100	3.100 mm (0.1220 in.)
		Mark 3.150	3.150 mm (0.1240 in.)
		Mark 3.200	3.200 mm (0.1260 in.)
		Mark 3.250	3.250 mm (0.1280 in.)
		Mark 3.300	3.300 mm (0.1299 in.)
Ignition timing	w/ Terminals TE1 and E1 connected of DLC1		10° BTDC @ idle
Idle speed	2JZ–GE		700 ± 50 rpm
	2JZ–GTE		650 ± 50 rpm
Intake Manifold Vacuum	at idle speed 2JZ–GE		66.6 kPa (500 mmHg, 19.7 in.Hg) or more
	2JZ–GTE		60 kPa (450 mmHg, 17.7 in.Hg) or more
Timing belt Tensioner	Protrusion (from housing side)		8.0–8.8 mm (0.315–0.346 in.)
Cylinder head	Warpage		
	Cylinder block side	Maximum	0.10 mm (0.0039 in.)
	Intake manifold side	Maximum	0.10 mm (0.0039 in.)
	Exhaust manifold side	Maximum	0.10 mm (0.0039 in.)
	Valve guide bore diameter	STD	10.985–11.006 mm (0.4325–0.4333 in.)
		O/S 0.05	11.035–11.056 mm (0.4344–0.4353 in.)
	Valve seat		
	Refacing angle		15°, 45°, 60°
	Contacting angle		45°
	Contacting width	Intake	1.0–1.4 mm (0.039–0.055 in.)
		Exhaust	1.2–1.6 mm (0.047–0.063 in.)
	Cylinder head bolt diameter	STD	10.8–11.0 mm (0.425–0.433 in.)
		Minimum	10.7 mm (0.421 in.)

Valve guide Bushing		Inside diameter	6.010–6.030 mm (0.2366–0.2374 in.)
	Outside diameter (for repair part)	STD	11.033–11.044 mm (0.4344–0.4348 in.)
		O/S 0.05	11.083–11.094 mm (0.4363–0.4368 in.)
Valve	Valve overall length	STD Intake	98.29–98.79 mm (3.8697–3.8894 in.)
		Exhaust	98.84–99.34 mm (3.8913–3.9110 in.)
		Minimum Intake	98.19 mm (3.8657 in.)
		Exhaust	98.74 mm (3.8874 in.)
	Valve face angle		44.5°
	Stem diameter	Intake	5.970–5.985 mm (0.2350–0.2356 in.)
		Exhaust	5.965–5.980 mm (0.2348–0.2354 in.)
	Stem oil clearance	STD Intake	0.025–0.060 mm (0.0010–0.0024 in.)
		Exhaust	0.030–0.065 mm (0.0012–0.0026 in.)
		Maximum Intake	0.08 mm (0.0031 in.)
		Exhaust	0.10 mm (0.0039 in.)
	Margin thickness	STD	0.8–1.2 mm (0.031–0.047 in.)
		Minimum	0.5 mm (0.020 in.)
Valve spring	Deviation	Maximum	2.0 mm (0.079 in.)
	Free length	Blue painted mark	41.74 mm (1.6433 in.)
		Yellow painted mark	41.70 mm (1.6417 in.)
	Installed tension at 34.5 mm (1.358 in.)		186–206 N (19.0–21.0 kgf, 42–46 lbf)
Valve lifter	Lifter diameter		30.966–30.976 mm (1.2191–1.2195 in.)
	Lifter bore diameter		31.000–31.016 mm (1.2205–1.2211 in.)
	Oil clearance	STD	0.024–0.050 mm (0.0009–0.0020 in.)
		Maximum	0.07 mm (0.0028 in.)
Camshaft	Thrust clearance	STD	0.080–0.190 mm (0.0031–0.0075 in.)
		Maximum	0.30 mm (0.0118 in.)
	Cam lobe height	STD Intake	44.570–44.670 mm (1.7547–1.7587 in.)
		Exhaust	44.770–44.870 mm (1.7626–1.7665 in.)
		Maximum Intake	44.42 mm (1.7488 in.)
		Exhaust	44.62 mm (1.7567 in.)
	Journal diameter		28.949–28.965 mm (1.1397–1.1404 in.)
	Journal oil clearance	STD	0.035–0.072 mm (0.0014–0.0028 in.)
		Maximum	0.10 mm (0.0039 in.)
	Circle runout	Maximum	0.08 mm (0.0031 in.)
Air intake chamber	Warpage	Maximum	0.15 mm (0.0059 in.)
Manifold	Warpage	Maximum Intake	0.15 mm (0.0059 in.)
		Exhaust 2JZ–GE	0.50 mm (0.0196 in.)
		2JZ–GTE	0.80 mm (0.0315 in.)
Cylinder block	Cylinder head surface warpage	Maximum	0.07 mm (0.0028 in.)
	Cylinder bore diameter	STD	86.000–86.013 mm (3.3858–3.3863 in.)
		Maximum	86.02 mm (3.3866 in.)
	Main bearing bolt diameter	STD	9.96–9.97 mm (0.3921–0.3925 in.)
		Minimum	9.7 mm (0.382 in.)
Connecting Rod	Thrust clearance	STD	0.250–0.402 mm (0.0098–0.0158 in.)
		Maximum	0.50 mm (0.0197 in.)
	Connecting bolt diameter	STD	8.1–8.3 mm (0.319–0.327 in.)
		Minimum	8.0 mm (0.315 in.)

Connecting rod (cont'd)	Connecting rod oil clearance	STD STD	0.035–0.053 mm (0.0014–0.0021 in.)
		U/S 0.25	0.040–0.078 mm (0.0016–0.0031 in.)
		Maximum STD	0.08 mm (0.0031 in.)
		U/S 0.25	0.09 mm (0.0035 in.)
	Connecting rod bearing center wall thickness (Reference)	STD Mark 1	1.492–1.495 mm (0.0587–0.0589 in.)
		Mark 2	1.495–1.498 mm (0.0589–0.0590 in.)
		Mark 3	1.498–1.501 mm (0.0590–0.0591 in.)
		Mark 4	1.501–1.504 mm (0.0591–0.0592 in.)
		Mark 5	1.504–1.507 mm (0.0592–0.0593 in.)
	Bushing inside diameter		22.005–22.014 mm (0.8663–0.8667 in.)
	Piston pin diameter		21.997–22.006 mm (0.8660–0.8664 in.)
	Piston pin oil clearance	STD	0.005–0.011 mm (0.0002–0.0004 in.)
		Maximum	0.05 mm (0.0020 in.)
	Rod bent	Maximum per 100 mm (3.94 in.)	0.05 mm (0.0020 in.)
	Rod twist	Maximum per 100 mm (3.94 in.)	0.15 mm (0.0059 in.)
Piston and Piston ring (2JZ–GE)	Piston diameter		85.935–85.945 mm (3.3833–3.3837 in.)
	Piston oil clearance	STD	0.055–0.078 mm (0.0022–0.0031 in.)
		Maximum	0.10 mm (0.0039 in.)
	Piston ring groove clearance	No.1	0.011–0.070 mm (0.0004–0.0028 in.)
		No.2	0.030–0.070 mm (0.0012–0.0028 in.)
	Piston ring end gap	STD No.1	0.300–0.470 mm (0.0118–0.0185 in.)
		No.2	0.350–0.520 mm (0.0138–0.0205 in.)
		Oil	0.130–0.450 mm (0.0051–0.0177 in.)
		Maximum No.1	1.07 mm (0.0421 in.)
		No.2	1.12 mm (0.0441 in.)
		Oil	1.05 mm (0.0413 in.)
Piston and Piston ring (2JZ–GTE)	Piston diameter		85.917–85.927 mm (3.3826–3.3830 in.)
	Piston oil clearance	STD	0.073–0.096 mm (0.0029–0.0038 in.)
		Maximum	0.12 mm (0.0047 in.)
	Piston ring groove clearance	No.1	0.040–0.080 mm (0.0016–0.0031 in.)
		No.2	0.030–0.070 mm (0.0012–0.0028 in.)
	Piston ring end gap	STD No.1	0.300–0.400 mm (0.0118–0.0157 in.)
		No.2	0.350–0.450 mm (0.0138–0.0178 in.)
		Oil	0.130–0.380 mm (0.0051–0.0150 in.)
		Maximum No.1	1.00 mm (0.0394 in.)
		No.2	1.05 mm (0.0413 in.)
		Oil	0.98 mm (0.0386 in.)
Crankshaft	Thrust clearance	STD	0.020–0.220 mm (0.0008–0.0087 in.)
		Maximum	0.30 mm (0.0118 in.)
	Thrust washer thickness	STD	1.940–1.990 mm (0.0764–0.0783 in.)
	Main journal oil clearance	STD STD	0.026–0.040 mm (0.0010–0.0016 in.)
		U/S 0.25	0.025–0.061 mm (0.0010–0.0024 in.)
		Maximum STD	0.06 mm (0.0024 in.)
		U/S 0.25	0.08 mm (0.0031 in.)
	Main journal diameter	STD	61.984–62.000 mm (2.4403–2.4409 in.)
		U/S 0.25	61.745–61.755 mm (2.4309–2.4313 in.)

Crankshaft (cont'd)	Main bearing center wall thickness (Reference)		
		Mark 1	1.994–1.997 mm (0.0785–0.0786 in.)
		Mark 2	1.997–2.000 mm (0.0786–0.0787 in.)
		Mark 3	2.000–2.003 mm (0.0787–0.0789 in.)
		Mark 4	2.003–2.006 mm (0.0789–0.0790 in.)
		Mark 5	2.006–2.009 mm (0.0790–0.0791 in.)
	Crank pin diameter	STD	51.982–52.000 mm (2.0465–2.0472 in.)
		U/S 0.25	51.745–51.755 mm (2.0372–2.0376 in.)
	Circle runout	Maximum	0.06 mm (0.0024 in.)
	Main journal taper and out–of–round	Maximum	0.02 mm (0.0008 in.)
	Crank pin taper and out–of–round	Maximum	0.02 mm (0.0008 in.)

TORQUE SPECIFICATIONS

Part tightened		N·m	kgf·cm	ft·lbf
Timing belt plate X Oil pump (2JZ–GTE)		7.8	80	69 in.·lbf
Idler pulley X Oil pump		34	350	25
Crankshaft pulley X Crankshaft		324	3,300	239
Camshaft timing pulley X Camshaft		79	810	59
Timing belt tensioner X Oil pump		26	270	20
Drive belt tensioner X Cylinder head		21	210	15
Drive belt tensioner damper X Tensioner arm (2JZ–GTE M/T)		20	200	14
Drive belt tensioner damper X Tensioner bracket (2JZ–GTE M/T)		20	200	14
EGR cooler X Cylinder head		8.8	90	78 in.·lbf
ECT sensor X Cylinder head (2JZ–GE)		20	200	14
ECT sender gauge X Cylinder head (2JZ–GE)		20	200	14
Engine hanger X Cylinder head		39	400	29
Camshaft position sensor X Cylinder head (2JZ–GTE)		8.8	90	78 in.·lbf
Cylinder head X Cylinder block	1st	34	350	25
	2nd	Turn 90°		
	3rd	Turn 90°		
Camshaft bearing cap X Cylinder head		20	200	14
No.4 timing belt cover X Cylinder head		8.8	90	78 in.·lbf
Cylinder head cover X Cylinder head	2JZ–GE	8.3	85	74 in.·lbf
	2JZ–GTE	5.4	55	48 in.·lbf
Intake manifold X Cylinder head	2JZ–GE	27	280	20
	2JZ–GTE	27	280	20
Fuel inlet pipe X Delivery pipe		42	420	30
Intake manifold stay X Intake manifold		39	400	29
Intake manifold stay X Cylinder block		39	400	29
Water outlet X Cylinder head (2JZ–GTE)		21	210	15
Vacuum control valve set X Intake manifold (2JZ–GE)		21	210	15
Air intake chamber X Intake manifold	2JZ–GE	27	280	20
	2JZ–GTE	27	280	20
Air intake chamber stay X Cylinder head (2JZ–GE)		18	185	13
Air intake chamber stay X Air intake chamber (2JZ–GE)		18	185	13
Exhaust manifold X Cylinder head		39	400	29
Pressure tank X Intake manifold (2JZ–GTE)		21	210	15
Main bearing cap X Cylinder block	1st	44	450	33
	2nd	Turn 90°		

Connecting rod cap X Connecting rod 1st	29	300	22
2nd	Turn 90°		
Oil nozzle X Crankshaft (2JZ–GTE)	8.8	90	78 in.·lbf
Rear oil seal retainer X Cylinder block	5.9	60	52 in.·lbf
Crankshaft position sensor X Cylinder block (2JZ–GTE)	8.8	90	78 in.·lbf
Engine mounting bracket X Cylinder block	58	590	43
Engine coolant drain plug X Cylinder block	29	300	22
Union for oil cooler X Cylinder block (2JZ–GTE)	39	400	29
Knock sensor X Cylinder block	44	450	33
Oil pressure switch X Cylinder block	14	150	11
Fuel pipe support X Cylinder block	14	145	10
Oil filter bracket X Cylinder block	88	900	65
No.2 water bypass pipe X Water pump	21	210	15
No.2 water bypass pipe X Cylinder block	21	210	15
Flywheel X Crankshaft (M/T) 1st	49	500	36
2nd	Turn 90°		
Drive plate X Crankshaft (A/T)	83	850	61
Clutch cover X Flywheel (M/T)	19	195	14
Cylinder block X Transmission 14 mm head	39	400	29
17 mm head	72	730	43
Clutch service hole cover X Clutch housing (2JZ–GTE M/T)	12	120	9
Drive plate X Torque converter clutch (A/T)	33	340	25
Oil cooler tube X Union for transmission (A/T)	34	350	25
Rear support member X Body	25	260	19
Rear support member X Engine rear mounting insulator	13	135	10
Front suspension crossmember X Engine mounting insulator	59	600	43
Transmission shift lever X Shift lever retainer (M/T)	19	195	14
Transmission control rod X Shift lever (A/T)	13	130	9
Clutch release cylinder X Transmission (M/T)	13	130	9
Clutch line tube X No.1 oil pan	37	380	27
Ground strap X Transmission (M/T)	37	380	27
Fuel inlet hose X Fuel pipe support	29	300	22
A/C compressor X Cylinder block for stud bolt	26	265	19
for bolt and nut	52	530	38
PS pump front bracket X Cylinder block (2JZ–GE)	58	590	43
PS pump front bracket X Oil pump (2JZ–GE)	52	530	38
PS pump housing X PS pump bracket	58	590	43
PS pump bracket X A/C compressor	58	590	43
PS pump bracket X Cylinder block	39	400	29
PS pump rear stay X PS pump bracket	39	400	29
PS pump rear stay X Intake manifold stay (2JZ–GE)	39	400	29
Rear center floor crossmember brace X Body (2JZ–GTE)	28	290	21
No.2 front exhaust pipe X Exhaust manifold	62	630	46
No.2 front exhaust pipe X Front exhaust pipe	58	590	43
Pipe support bracket X Transmission	43	440	32
Front exhaust pipe X Center exhaust pipe	58	590	43
Center exhaust pipe X Tailpipe	19	195	14
Sub heated oxygen sensor x Front exhaust pipe (2JZ–GE (California), 2JZ–GTE)	20	200	14

SFI SYSTEM (2JZ–GE)

PREPARATION
SST (SPECIAL SERVICE TOOLS)

	09205–76030 Cylinder Head Setting Bolt Tightening Adaptor	ECT sensor
	09268–41045 Injection Measuring Tool Set	
	(09268–41070) No.4 Union	
	(09268–41090) No.7 Union	
	(90405–09015) No.1 Union	
	09268–45012 EFI Fuel Pressure Gauge	
	09612–24014 Steering Gear Housing Overhaul Tool Set	
	(09617–24011) Steering Rack Wrench	Fuel pressure pulsation damper
	09631–22020 Power Steering Hose Nut 14 x 17 mm Wrench Set	Fuel line flare nut
	09808–14010 Fuel Sender Gauge Tool Assy	
	09816–30010 Oil Pressure Switch Socket	Knock sensor
	09842–30070 Wiring “F” EFI Inspection	Injector

	09843–18020 Diagnostic Check Wire	
	09990–01000 Engine Control Computer Check Harness “A”	

RECOMMENDED TOOLS

	09082–00050 TOYOTA Electrical Tester Set ◆	
	09200–00010 Engine Adjust Kit ◆	
	09258–00030 Hose Plug Set ◆	Plug for vacuum hose, fuel hose etc.

EQUIPMENT

Carburetor cleaner	
Graduated cylinder	Injector
Soft brush	
Sound scope	Injector
Tachometer	
Torque wrench	
Vacuum gauge	

COOLANT

Item		Capacity	Classification
Engine coolant (w/ Heater)	M/T	7.3 liters (7.7 US qts, 6.4 lmp. qts)	Ethylene–glycol base
	A/T	8.3 liters (8.8 US qts, 7.3 lmp. qts)	

PRECAUTION

1. **Before working on the fuel system, disconnect the negative (–) terminal cable from the battery.**
   HINT: Any diagnostic trouble code retained by the computer will be erased when the negative (–) terminal cable is disconnected.
   Therefore, if necessary, read the diagnosis before disconnecting the negative (–) terminal cable from the battery.
2. **Do not smoke or work near an open flame when working on the fuel system.**
3. **Keep gasoline away from rubber or leather parts.**

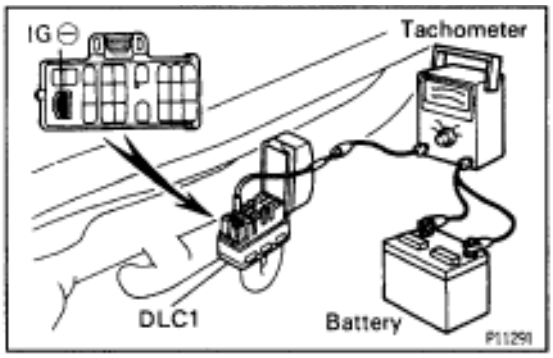

MAINTENANCE PRECAUTIONS

1. PRECAUTION WHEN CONNECTING GAUGE

(a) Use battery as the power source for the timing light, tachometer, etc.

(b) Connect the tester probe of a tachometer to the terminal IG⊖ of the DLC1.

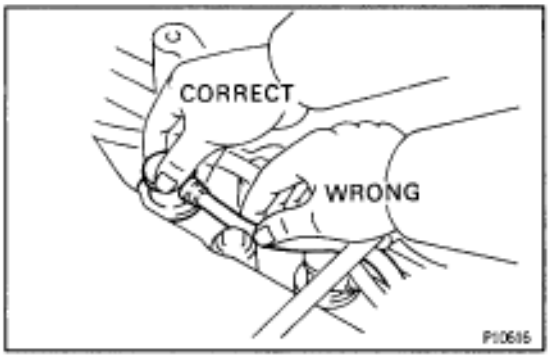

2. IN EVENT OF ENGINE MISFIRE, FOLLOWING PRECAUTIONS SHOULD BE TAKEN

(a) Check proper connection of battery terminals, etc.

(b) Handle high–tension cords carefully.

(c) After repair work, check that the ignition coil terminals and all other ignition system lines are reconnected securely.

(d) When cleaning the engine compartment, be especially careful to protect the electrical system from water.

3. PRECAUTIONS WHEN HANDLING OXYGEN SENSOR

(a) Do not allow oxygen sensor to drop or hit against an object.

(b) Do not allow the sensor to come into contact with water.

IF VEHICLE IS EQUIPPED WITH MOBIL RADIO SYSTEM (HAM, CB, ETC.)

If the vehicle is equipped with a mobile communication system, refer to the precaution in the IN section.

AIR INDUCTION SYSTEM

1. Separation of the engine oil dipstick, oil filler cap, PCV hose, etc. may cause the engine to run out of tune.
2. Disconnection, looseness or cracks in the parts of the air induction system between the throttle body and cylinder head will cause air suction and cause the engine to run out of tune.

ELECTRONIC CONTROL SYSTEM

1. Before removing SFI wiring connectors, terminals, etc., first disconnect the power by either turning the ignition switch OFF or disconnecting the negative (–) terminal cable from the battery.
   HINT: Always check the diagnostic trouble code before disconnecting the negative (–) terminal cable from the battery.
2. When installing the battery, be especially careful not to incorrectly connect the positive (+) and negative (–) cables.
3. Do not permit parts to receive a severe impact during removal or installation. Handle all SFI parts carefully, especially the ECM.
4. Do not be careless during troubleshooting as there are numerous transistor circuits and even slight terminal contact can cause further troubles.
5. Do not open the ECM cover.
6. When inspecting during rainy weather, take care to prevent entry of water. Also, when washing the engine compartment, prevent water from getting on the SFI parts and wiring connectors.
7. Parts should be replaced as an assembly.
8. Care is required when pulling out and inserting wiring connectors.

(a) Release the lock and pull out the connector, pulling on the connectors.
(b) Fully insert the connector and check that it is locked.

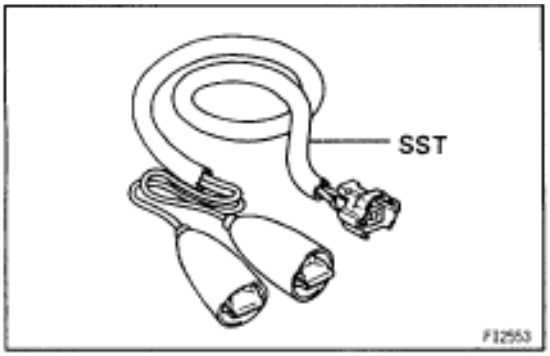

9. Use SST for inspection or test of the injector or its wiring connector.
   SST 09842–30070

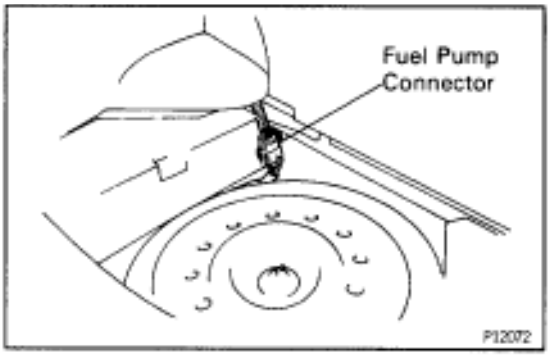

FUEL SYSTEM

1. When disconnecting the high pressure fuel line, a large amount of gasoline will spill out, so observe the following procedures:

(a) Disconnect the fuel pump connector.
(b) Start the engine. After the engine has stopped on its own, turn off the ignition switch.

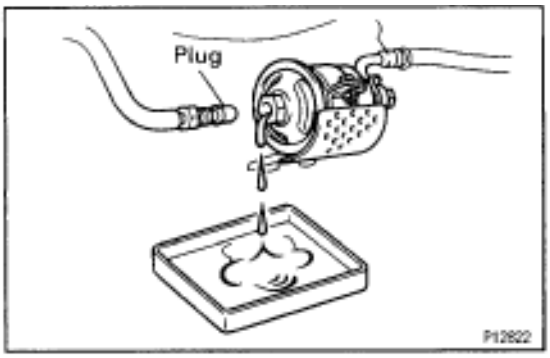

(c) Put a container under the connection.
(d) Slowly loosen the connection.
(e) Disconnect the connection.
(f) Plug the connection with a rubber plug.
(g) Reconnect the fuel pump connector.

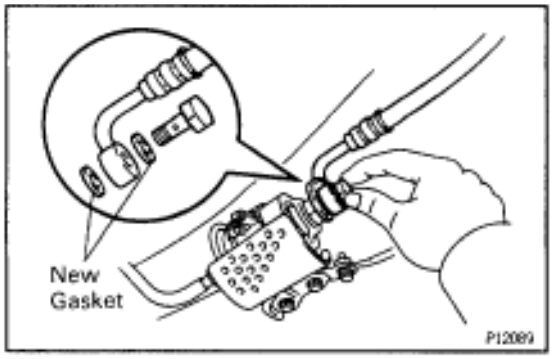

2. When connecting the flare nut or union bolt on the high pressure pipe union, observe the following procedures:

Union Bolt Type:

(a) Always use a new gasket.
(b) Tighten the union bolt by hand.
(c) Tighten the union bolt to the specified torque.
   Torque: 29 N·m (300 kgf·cm, 22 ft·lbf)

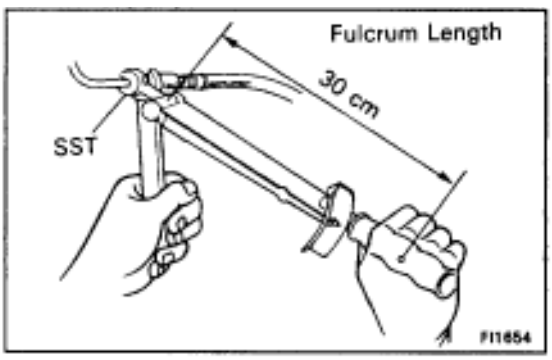

Flare Nut Type:

(a) Apply a light coat of engine oil to the flare nut, and tighten the flare nut by hand.
(b) Using SST, tighten the flare nut to specified torque.
   SST 09631–22020
   Torque: 30 N·m (310 kgf·cm, 22 ft·lbf)
   HINT: Use a torque wrench with a fulcrum length of 30 cm (11.81 in.).

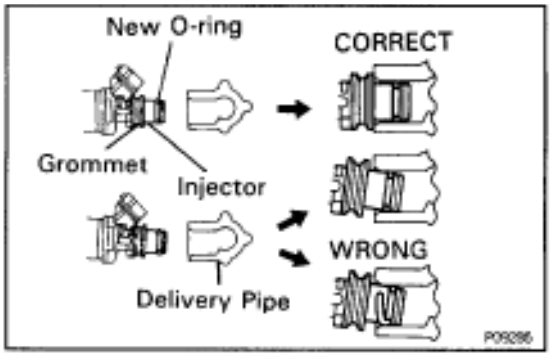

3. Observe the following precautions when removing and installing the injectors.
(a) Never reuse the O–ring.
(b) When placing a new O–ring on the injector, take care not to damage it in any way.
(c) Coat a new O–ring with spindle oil or gasoline before installing–never use engine, gear or brake oil.

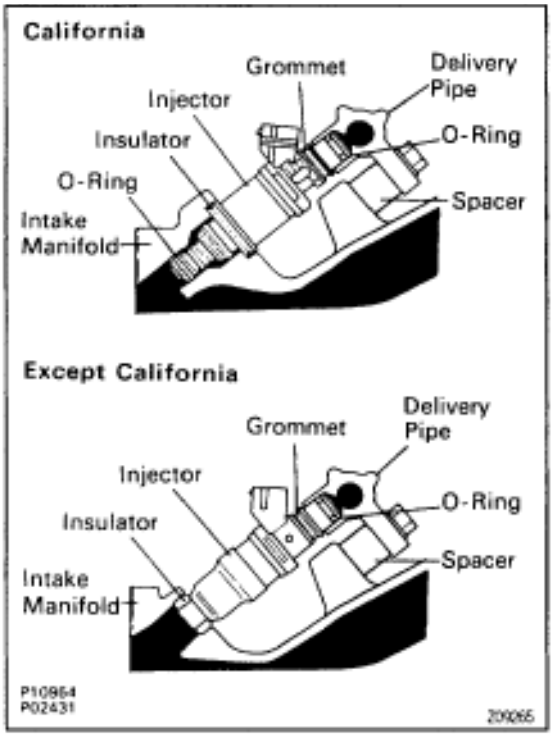

4. Install the injector to the delivery pipe and intake manifold as shown in the illustration.

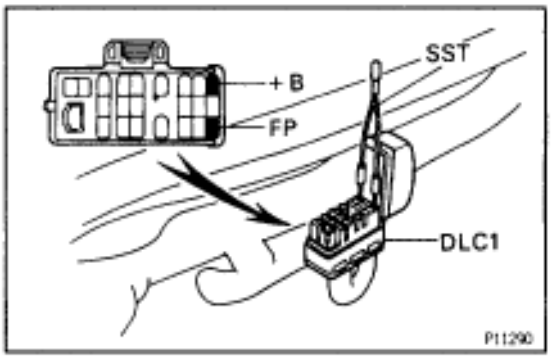

5. Check that there are no fuel leaks after doing maintenance anywhere on the fuel system.
(a) Using SST, connect terminals +B and FP of the DLC 1.
SST 09843–18020
(b) With engine stopped, turn the ignition switch ON.

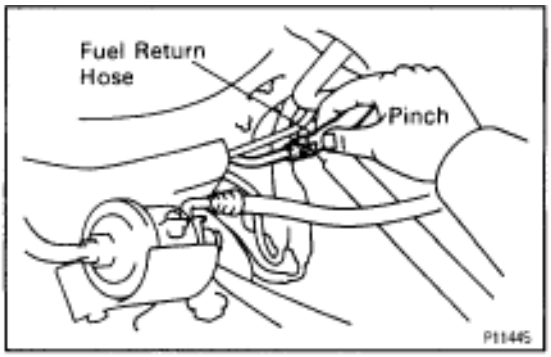

(c) Pinch the fuel return hose.
The pressure in the high pressure line will rise to approx. 392 kPa (4 kgf/cm^2, 57 psi). In this state, check to see that there are no leaks from any part of the fuel system.
NOTICE: Always pinch the hose. Avoid bending as it may cause the hose to crack.
(d) Turn the ignition switch OFF.
(e) Remove the SST from the DLC1.
SST 09843–18020

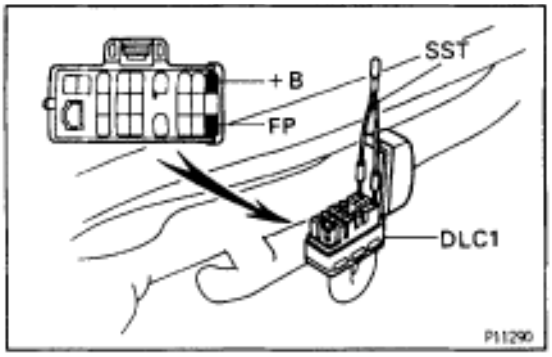

FUEL PUMP
ON–VEHICLE INSPECTION

1. CHECK FUEL PUMP OPERATION

(a) Using SST, connect terminals +B and FP of the DLC 1.
SST 09843–18020

(b) Turn the ignition switch ON.
NOTICE: Do not start the engine.

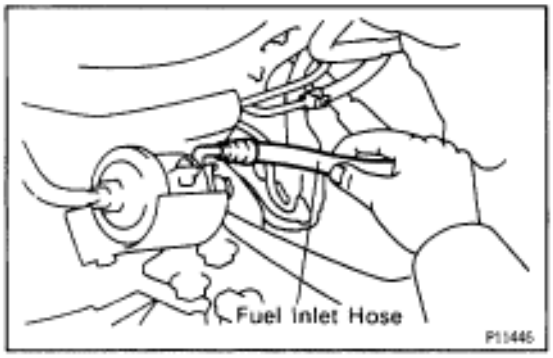

(c) Check that there is pressure in the fuel inlet hose from the fuel filter.
HINT: If there is fuel pressure, you will hear the sound of fuel flowing.
If there is no pressure, check the following parts:
- Fuse
- EFI main relay
- Fuel pump
- ECM
- Wiring connections

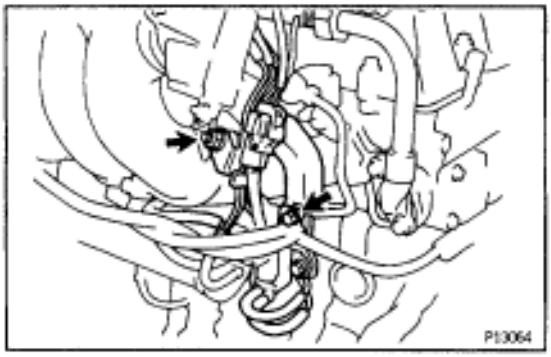

(d) Turn the ignition switch OFF.

(e) Remove the SST from the DLC1.
SST 09843–18020

2. CHECK FUEL PRESSURE

(a) Check the battery voltage is above 12 V.

(b) Disconnect the negative (–) terminals cable from the battery.

(c) Remove the 2 nuts, and disconnect the No.2 vacuum pipe from the air intake chamber and intake manifold.



(d) Remove the union bolt and 2 gaskets, disconnect the fuel inlet pipe from the delivery pipe.
CAUTION:
Put a shop towel under the delivery pipe.
Slowly loosen the union bolt.

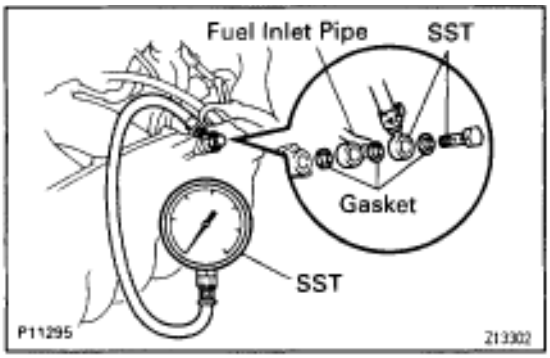

(e) Install the fuel inlet pipe and SST (pressure gauge) to the delivery pipe with the 3 gaskets and SST (union bolt).
SST 09268–45012
Torque: 42 N·m (420 kgf·cm, 30 ft·lbf)

(f) Wipe off any splattered gasoline.

(g) Using SST, connect terminals +B and FP of the DLC 1.
SST 09843–18020

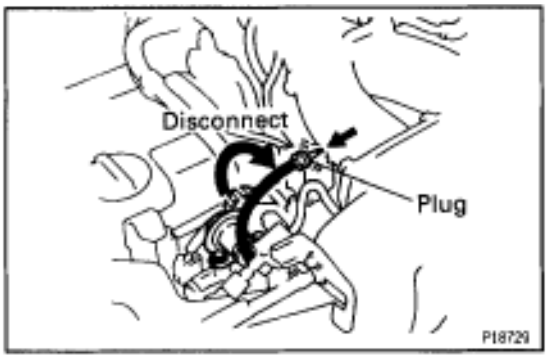

(h) Reconnect the negative (–) terminal cable to the battery.
(i) Turn the ignition switch ON.
(j) Measure the fuel pressure.
Fuel pressure:
265–304 kPa (2.7–3.1 kgf/cm^2, 38–44 psi)
If pressure is high, replace the fuel pressure regulator.
If pressure is low, check the following parts:
- Fuel hoses and connections
- Fuel pump
- Fuel filter
- Fuel pressure regulator

(k) Remove the SST from the DLC1.
SST 09843–18020
(l) Start the engine.
(m) Disconnect the vacuum sensing hose from the fuel pressure regulator, and plug the hose end.
(n) Measure the fuel pressure at idle.
Fuel pressure:
265–304 kPa (2.7–3.1 kgf/cm^2, 38–44 psi)
(o) Reconnect the vacuum sensing hose to the fuel pressure regulator.
(p) Measure the fuel pressure at idle.
Fuel pressure:
196–235 kPa (2.0–2.4 kgf/cm^2, 28–34 psi)
If pressure is not as specified, check the vacuum sensing hose and fuel pressure regulator.
(q) Stop the engine.
(r) Check that the fuel pressure remains as specified for 5 minutes after the engine has stopped.
Fuel pressure:
147 kPa (1.5 kgf/cm^2, 21 psi) or more
If pressure is not as specified, check the fuel pump, pressure regulator and/or injectors.
(s) After checking fuel pressure, disconnect the negative (–) terminal cable from the battery and carefully remove the SST to prevent gasoline from splashing.
SST 09268–45012
(t) Install the fuel inlet pipe to the delivery pipe with 2 new gaskets and the union bolt.
Torque: 42 N·m (420 kgf·cm^2, 30 ft·lbf)
(u) Install the No.2 vacuum pipe with the 2 nuts.
Torque: 27 N·m (270 kgf·cm^2, 20 ft·lbf)
(v) Reconnect the negative (–) terminal cable to the battery.
(w) Check for fuel leaks.
(See item 5 in fuel system in precaution)

COMPONENTS FOR REMOVAL AND INSTALLATION

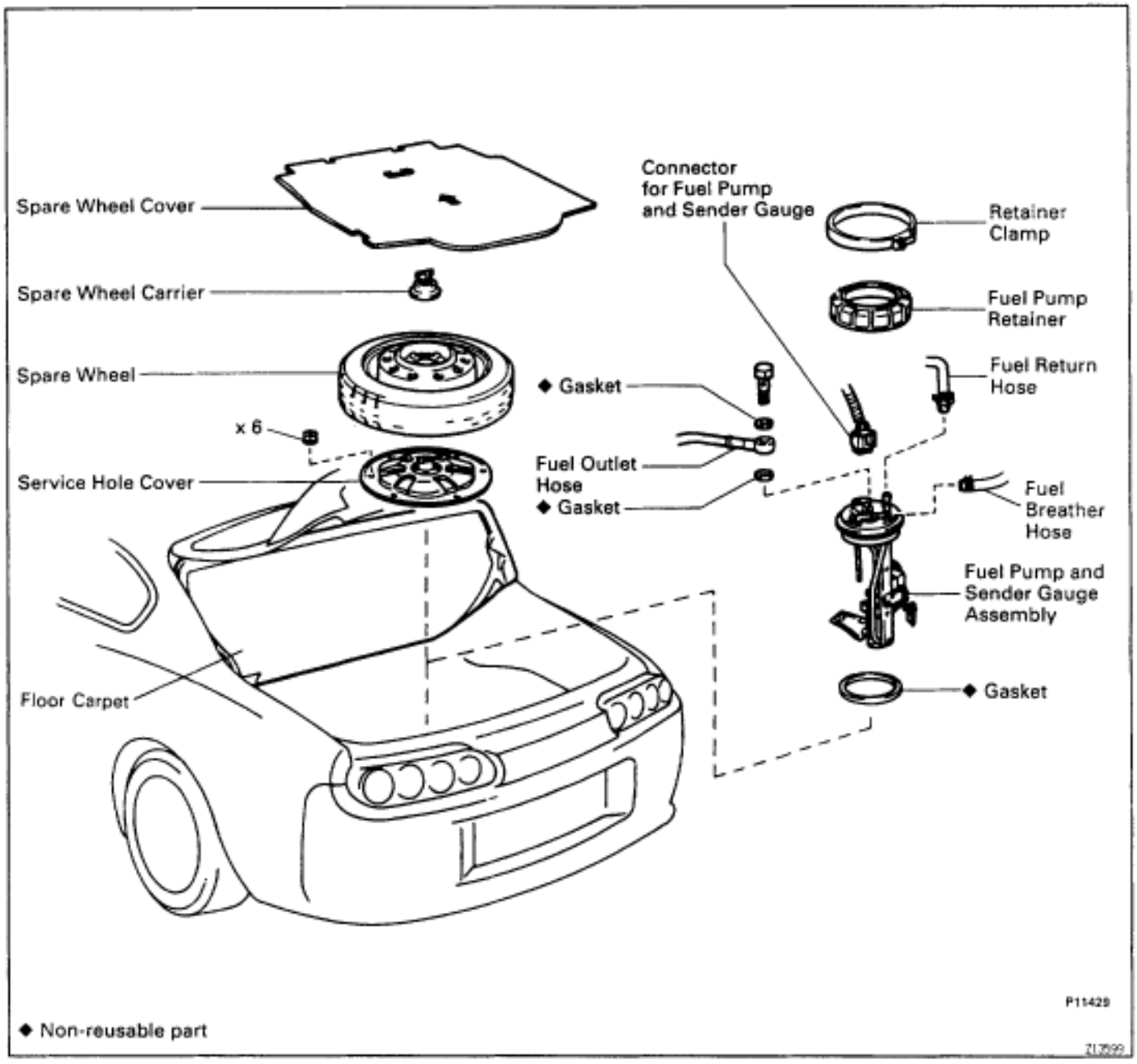

FUEL PUMP REMOVAL

CAUTION: Do not smoke or work near an open flame when working on the fuel pump.

1. **TAKE OUT FLOOR CARPET**
2. **REMOVE SPARE WHEEL COVER**
3. **REMOVE SPARE WHEEL**
4. **REMOVE SERVICE HOLE COVER**

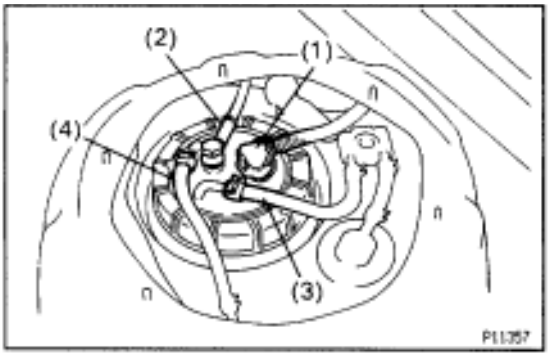

5. REMOVE FUEL PUMP AND SENDER GAUGE ASSEMBLY

(a) Disconnect the connector and hoses from the fuel pump bracket:
- (1) Fuel pump connector
- (2) Fuel outlet hose
  Remove the union bolt and 2 gaskets, and disconnect the outlet hose.
- (3) Fuel return hose
- (4) Fuel breather hose

(b) Remove the retainer clamp.

(c) Using SST, loosen the retainer.
SST 09808–14010

(d) Remove the retainer, the fuel pump, sender gauge assembly and gasket.

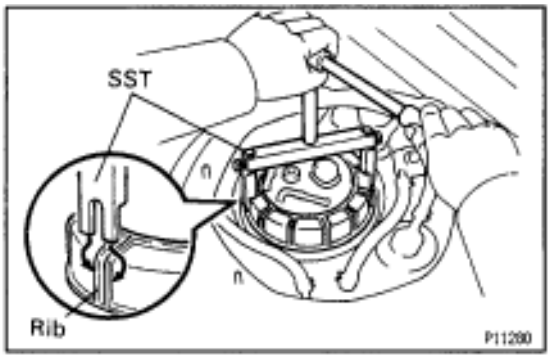

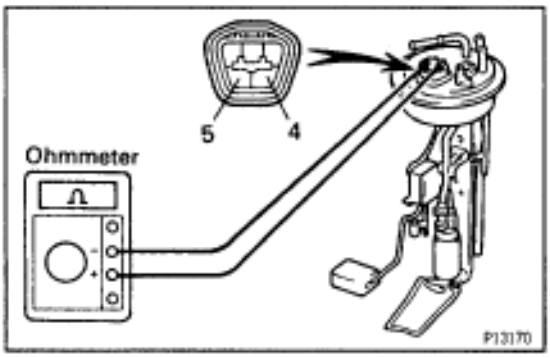

FUEL PUMP INSPECTION

1. INSPECT FUEL PUMP RESISTANCE

Using an ohmmeter, measure the resistance between terminals 4 and 5.

Resistance:

0.2–3.0 Ω at 20°C (68°F)

If the resistance is not as specified, replace the fuel pump, lead wire or fuel pump bracket.

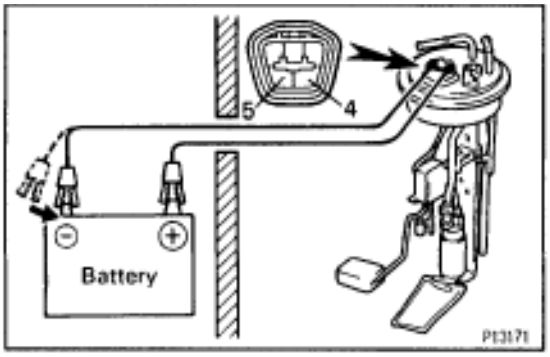

2. INSPECT FUEL PUMP OPERATION

Connect a tester lead from terminal 4 of the connector to the positive (+) terminal of the battery; connect another tester lead from terminal 5 of the connector to the negative (–) terminal of the battery.

NOTICE:

These tests must be performed quickly (within 10 seconds) to prevent the coil from burning out.

Keep the fuel pump as far away from the battery as possible.

Always connect or disconnect at the battery.

If operation is not as specified, replace the fuel pump, lead wire or fuel pump bracket.

COMPONENTS FOR DISASSEMBLY AND ASSEMBLY

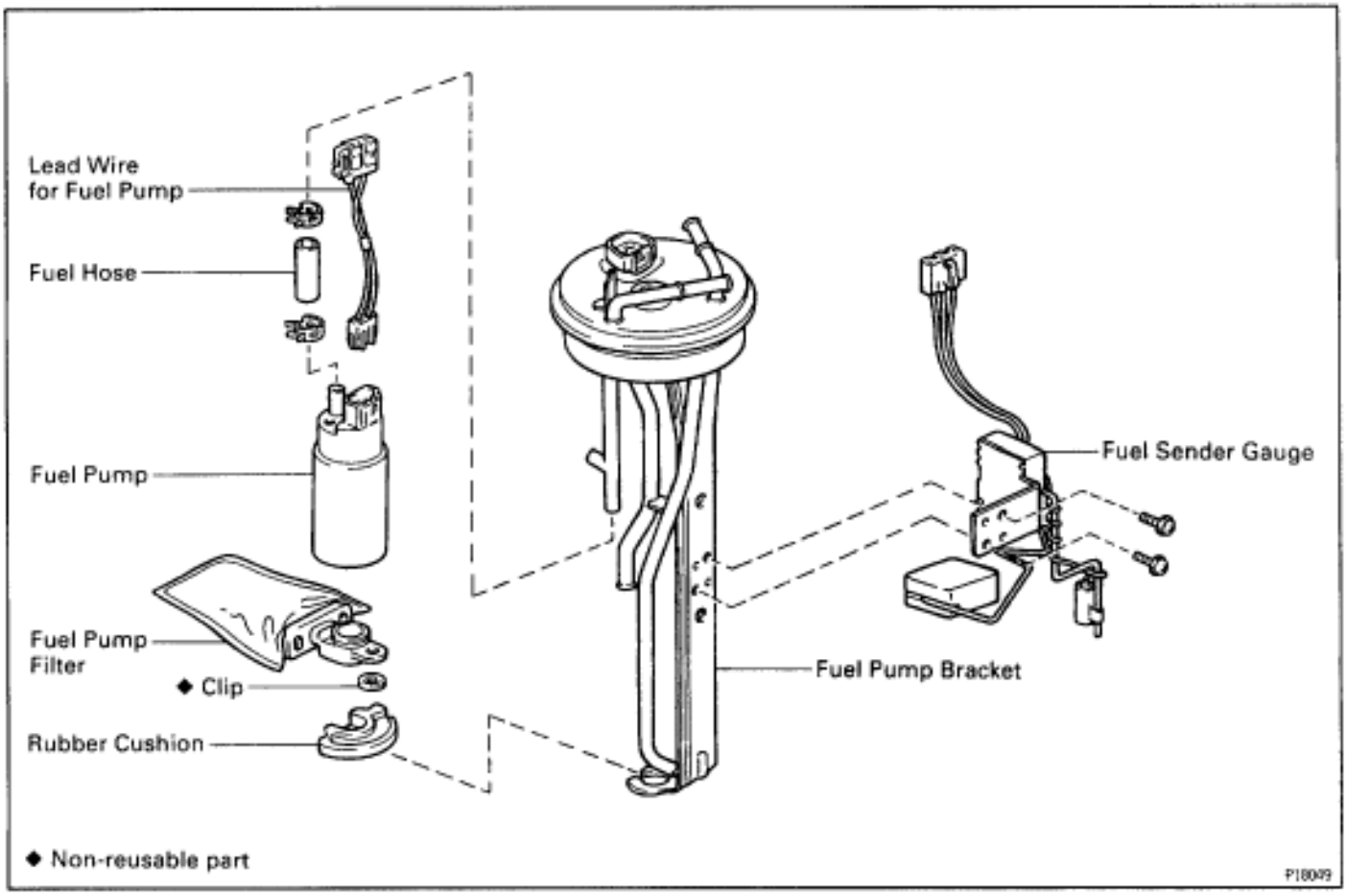

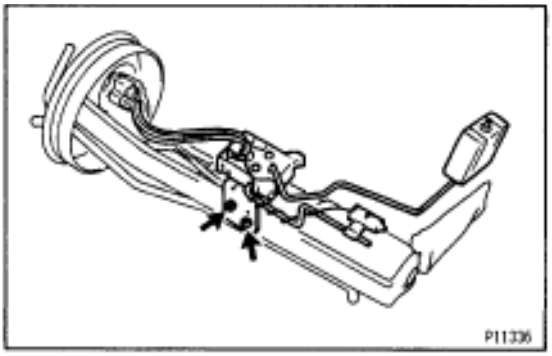

FUEL PUMP DISASSEMBLY

Assembly is in the reverse order of disassembly.

1. REMOVE FUEL SENDER GAUGE FROM FUEL PUMP BRACKET

(a) Disconnect the connector from the fuel pump bracket.

(b) Remove the 2 screws and sender gauge.

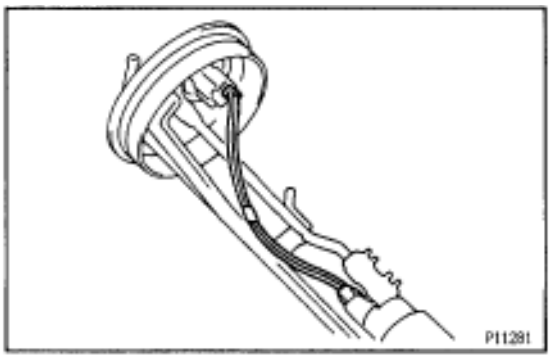

2. REMOVE FUEL PUMP FROM PUMP BRACKET

(a) Remove the lead wire.

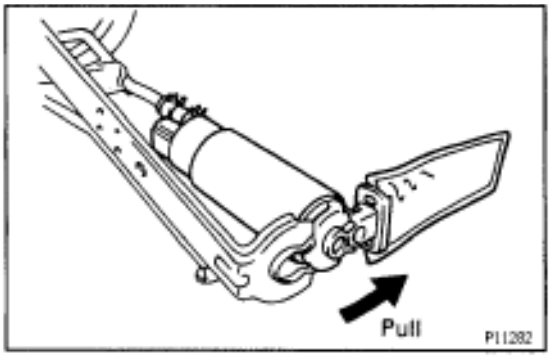

(b) Pull out the lower side of the fuel pump from the pump bracket.
(c) Remove the rubber cushion from the fuel pump.
(d) Disconnect the fuel hose from the fuel pump, and remove the fuel pump.

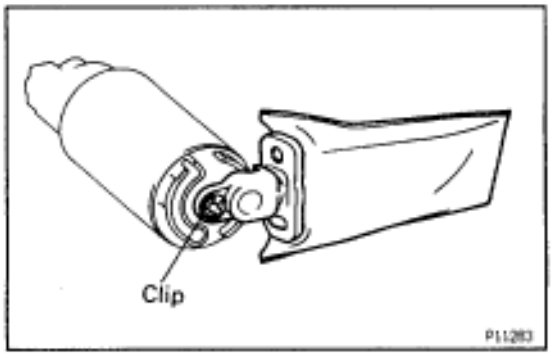

3. REMOVE FUEL PUMP FILTER FROM FUEL PUMP

(a) Using a small screwdriver, remove the clip.
INSTALLATION HINT: Use a new clip.
(b) Pull out the pump filter.

FUEL PUMP INSTALLATION

1. INSTALL FUEL PUMP AND SENDER GAUGE ASSEMBLY

(a) Install a new gasket to the fuel tank.
(b) Insert fuel pump and sender gauge assembly into the fuel tank.
(c) Align the arrow marks of the fuel pump bracket and fuel tank.

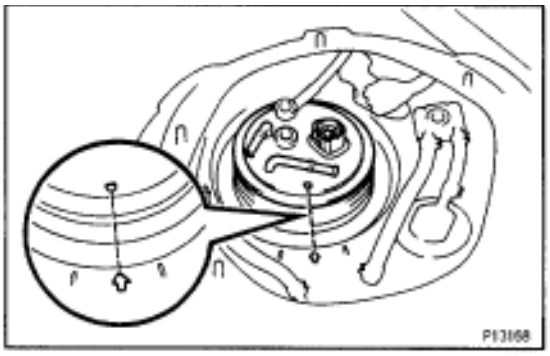

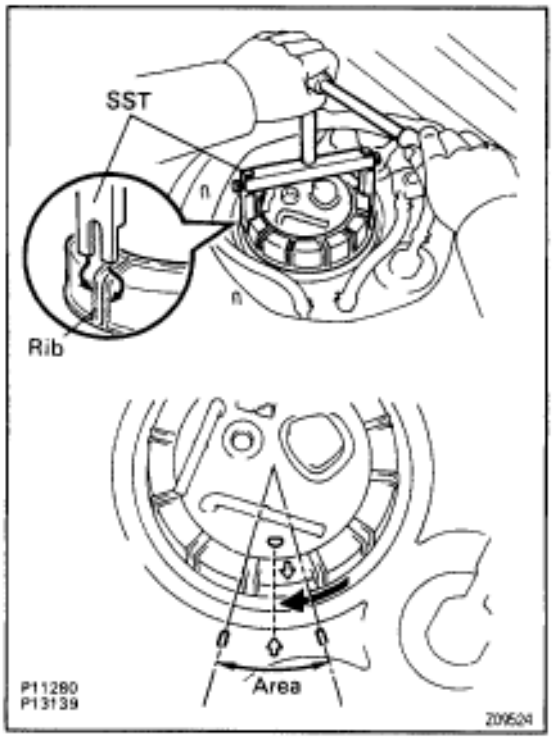

(d) Temporarily install the retainer.
(e) Using SST, tighten the retainer until the arrow mark on the retainer is within the lines on the fuel tank.
SST 09808–14010
(f) Check that the arrow marks of the fuel pump bracket and fuel tank are aligned.

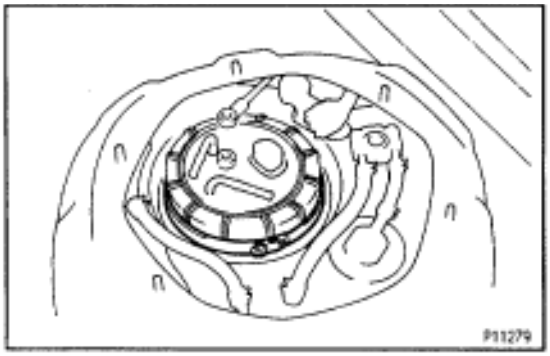

(g) Install the retainer clamp.
(h) Connect the connector and hoses to the fuel pump bracket:
- Fuel pump connector
- Fuel outlet hose

Connect the outlet hose with 2 new gaskets and the union bolt.

Torque: 29 N·m (300 kgf·cm, 22 ft·lbf)

- Fuel return hose
- Fuel breather hose

2. REMOVE SERVICE HOLE COVER
3. REMOVE SPARE WHEEL
4. REMOVE SPARE WHEEL COVER
5. TAKE OUT FLOOR CARPET
6. CHECK FOR FUEL LEAKS
(See item 5 in fuel system in precaution)

FUEL PRESSURE REGULATOR COMPONENTS FOR REMOVAL AND INSTALLATION

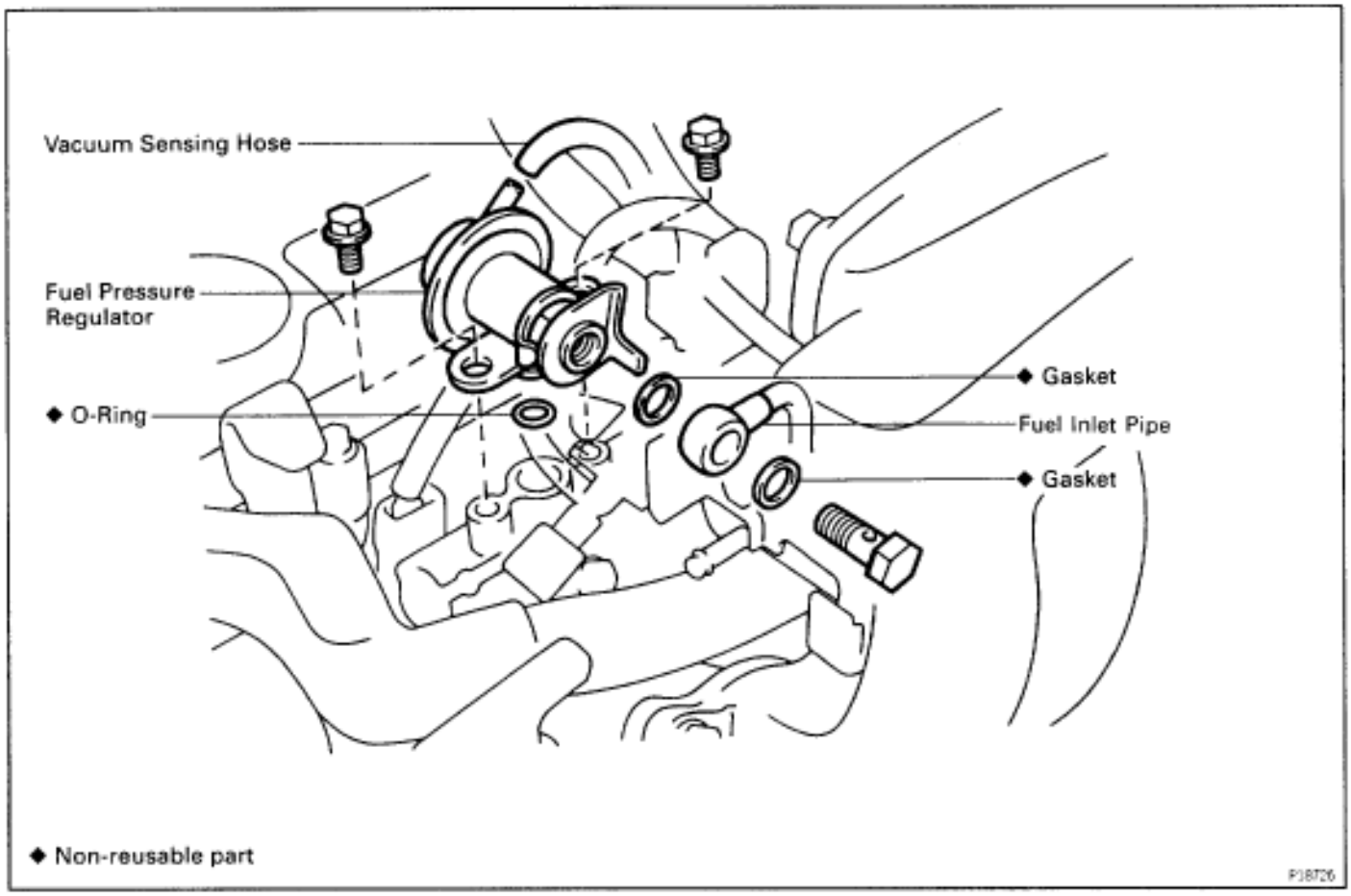

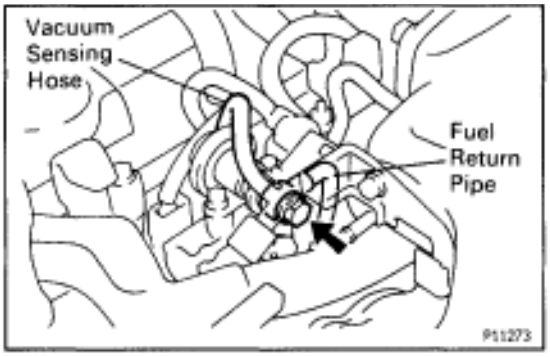

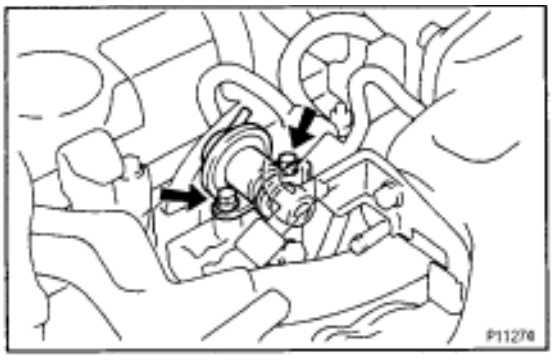

FUEL PRESSURE REGULATOR REMOVAL

1. DISCONNECT VACUUM SENSING HOSE FROM FUEL PRESSURE REGULATOR

2. DISCONNECT FUEL RETURN PIPE FROM FUEL PRESSURE REGULATOR

Remove the union bolt and 2 gaskets, and disconnect the return pipe from the pressure regulator.

CAUTION:

Put a shop rag under the pressure regulator.

Slowly loosen the union bolt.

3. REMOVE FUEL PRESSURE REGULATOR

(a) Remove the 2 bolts, and pull out the pressure regulator.

(b) Remove the O–ring from the pressure regulator.

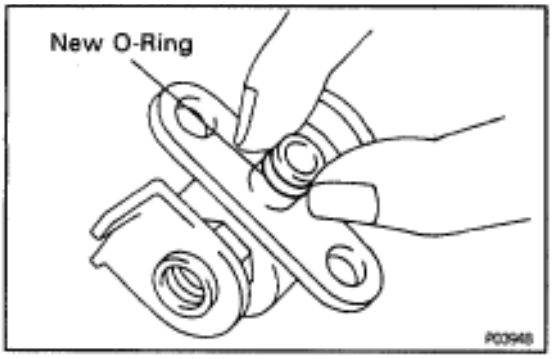

FUEL PRESSURE REGULATOR INSTALLATION

1. INSTALL FUEL PRESSURE REGULATOR

(a) Apply a light coat of gasoline to a new O–ring, and install it to the pressure regulator.

(b) Attach the pressure regulator to the delivery pipe.

(c) Check that the pressure regulator rotates smoothly.
NOTICE: If it does not rotate smoothly, the O–ring may be pinched, so remove the pressure regulator and do steps (b) and (c) above again.

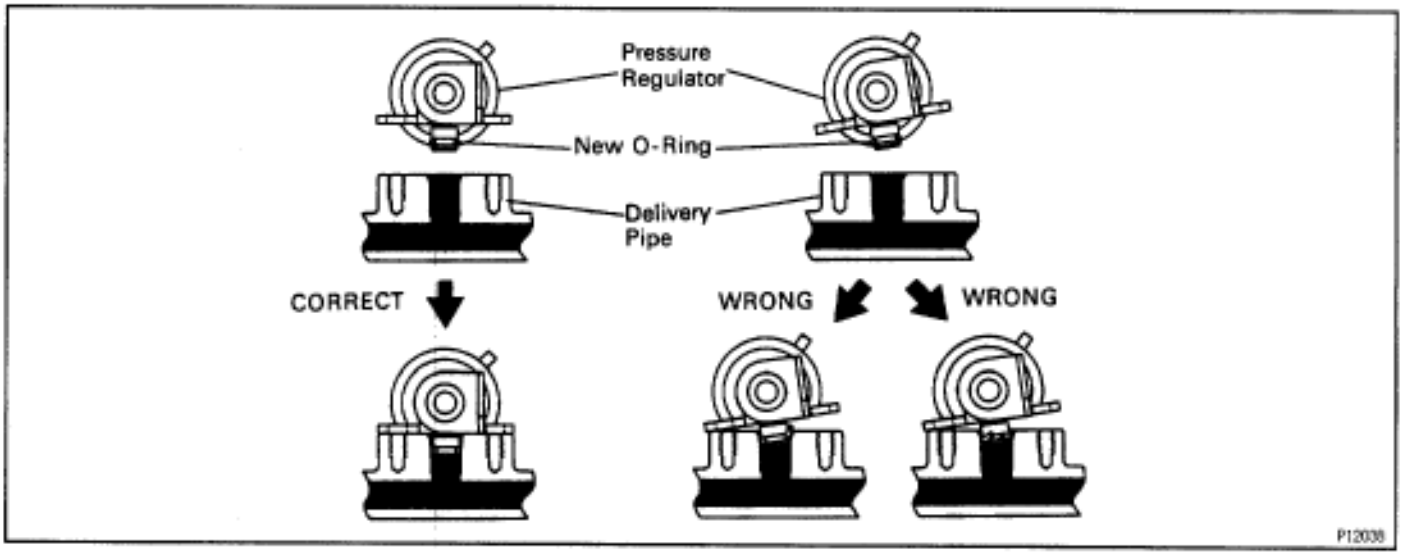

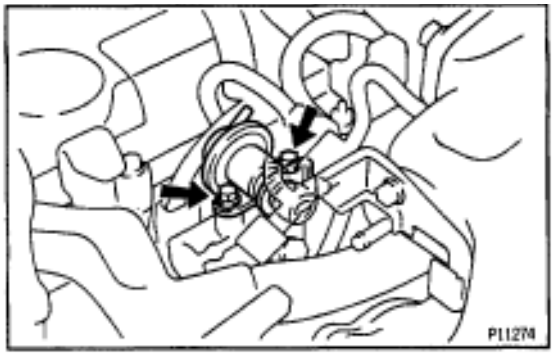

(d) Install the pressure regulator with the 2 bolts.
Torque: 8.8 N·m (90 kgf·cm, 78 in.·lbf)

2. CONNECT FUEL RETURN PIPE TO FUEL PRESSURE REGULATOR
Install the return pipe with 2 new gaskets and the union bolt.
Torque: 27 N·m (280 kgf·cm, 20 ft·lbf)

3. CONNECT VACUUM SENSING HOSE TO FUEL PRESSURE REGULATOR

4. CHECK FOR FUEL LEAKS
(See item 5 in fuel system in precaution)

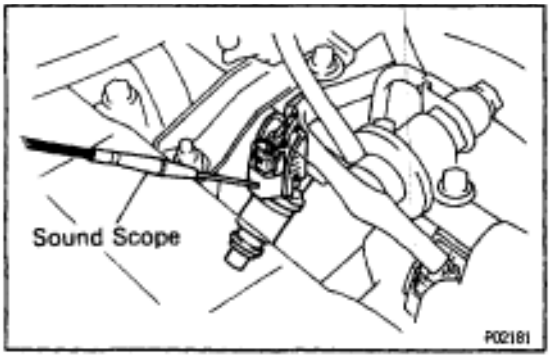

INJECTOR

ON–VEHICLE INSPECTION

1. INSPECT INJECTOR OPERATION

Check operation sound from each injector.

(a) With the engine running or cranking, use a sound scope to check that there is normal operating noise in proportion to engine speed.

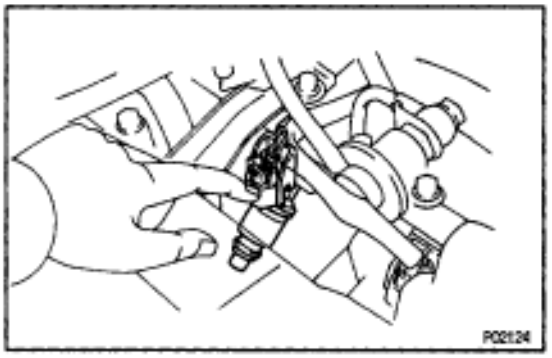

(b) If you have no sound scope, you can check the injector transmission operation with your finger.
If no sound is heard or unusual vibration is felt, check the wiring connector, injector or injection signal from the ECM.

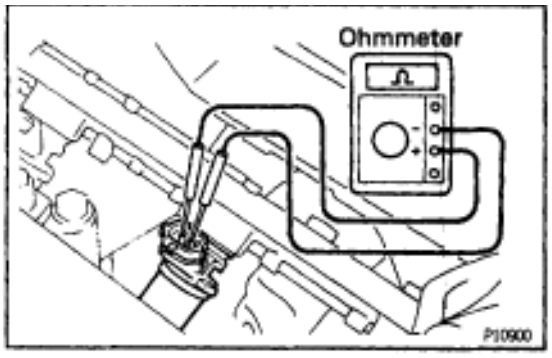

2. INSPECT INJECTOR RESISTANCE

(a) Remove the throttle body together with the intake air connector. (See steps 1 to 9 in injector removal)

(b) Disconnect the 6 injector connectors.

(c) Using an ohmmeter, measure the resistance between the injector terminals.

Resistance:

At 20°C (68°F) 13.4–14.2 Ω

If the resistance is not as specified, replace the injector.

(d) Reconnect the 6 injector connectors.

(e) Reinstall the throttle body together with the intake air connector. (See steps 8 to 16 in injector installation)

COMPONENTS FOR REMOVAL AND INSTALLATION

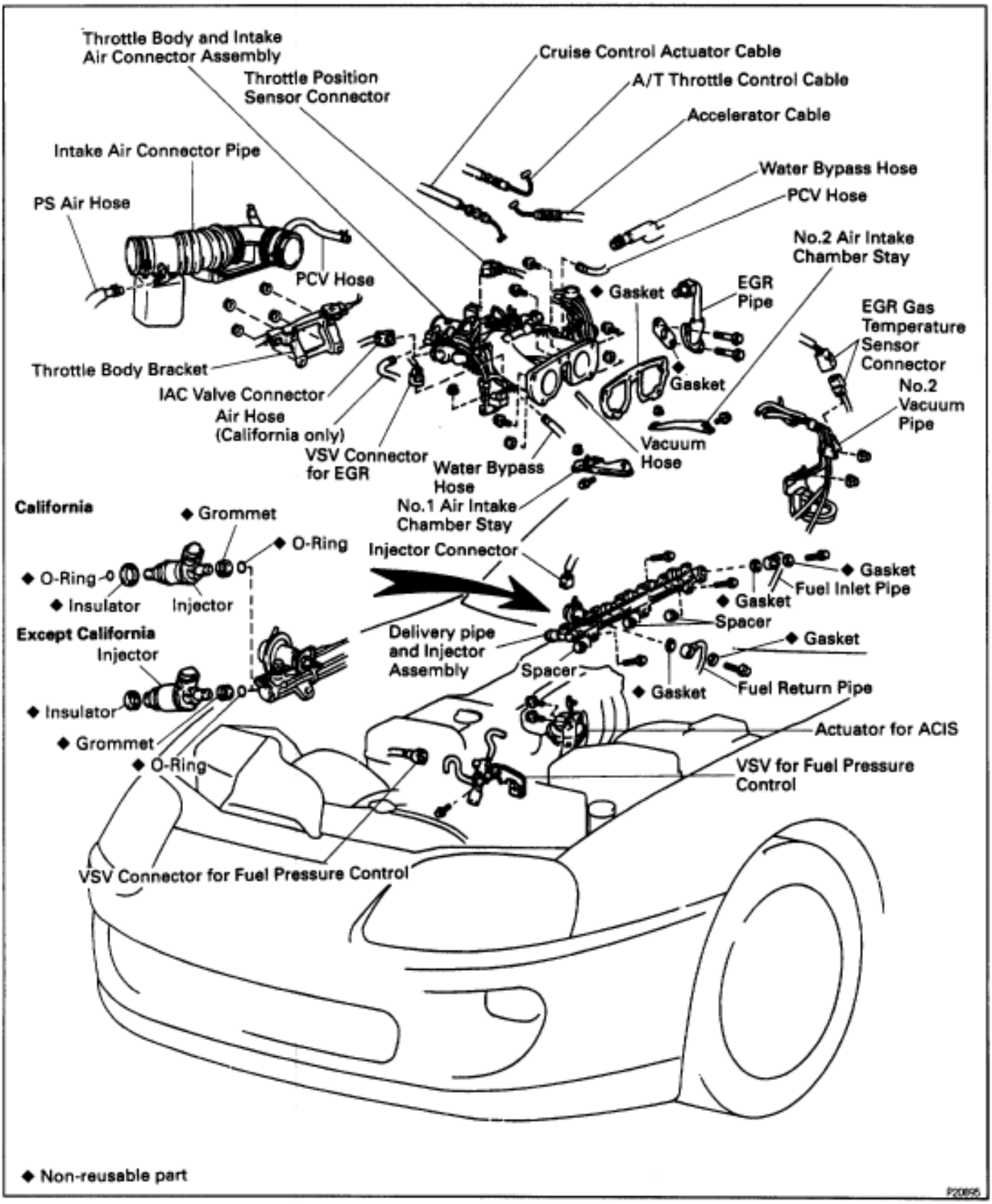

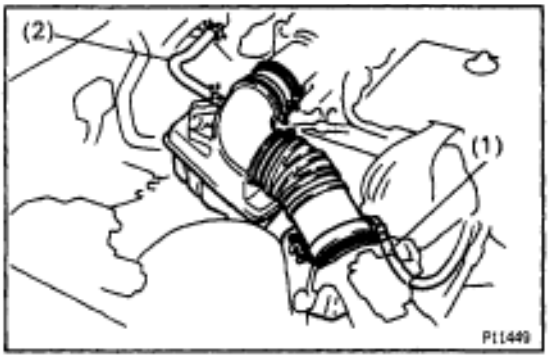

INJECTORS REMOVAL

1. DRAIN ENGINE COOLANT

2. DISCONNECT CONTROL CABLES FROM THROTTLE BODY

3. REMOVE INTAKE AIR CONNECTOR PIPE

(a) Disconnect these hoses:
  (1) PS air hose from air connector pipe
  (2) PCV hose from No.2 cylinder head cover

(b) Loosen the 2 hose clamps, and remove the air connector pipe together with the hoses.

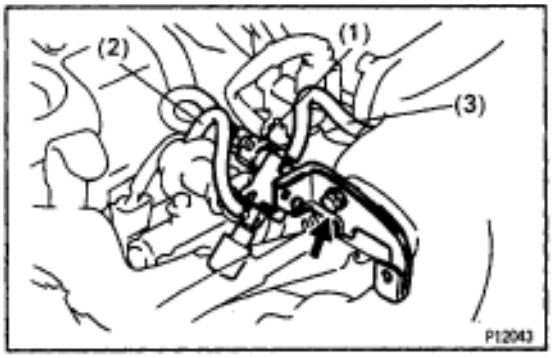

4. California only:
REMOVE VSV FOR FUEL PRESSURE CONTROL

(a) Disconnect the connector and hoses:
  (1) VSV connector
  (2) Vacuum sensing hose from fuel pressure control
  (3) Vacuum sensing hose from air intake chamber

(b) Remove the bolt and VSV.

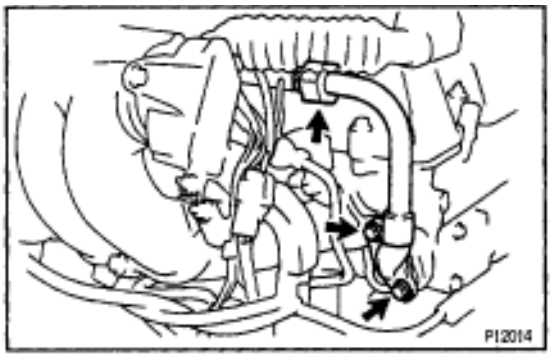

5. REMOVE EGR PIPE

(a) Loosen the union nut of the EGR pipe.

(b) Remove the 2 bolts, EGR pipe and gasket.

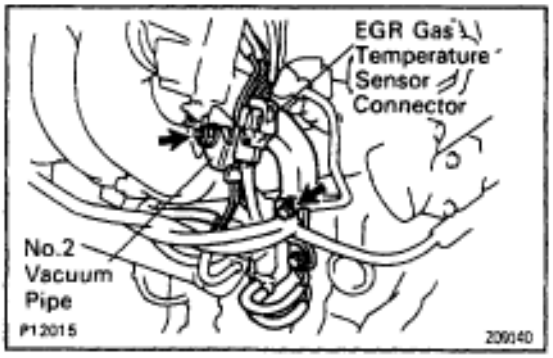

6. DISCONNECT EGR GAS TEMPERATURE SENSOR CONNECTOR

(a) Disconnect the connector from the No.2 vacuum pipe.

(b) Disconnect the sensor connector from the wiring connector.

7. DISCONNECT NO.2 VACUUM PIPE FROM AIR INTAKE CHAMBER AND INTAKE MANIFOLD

Remove the 2 nuts, and disconnect the vacuum pipe from the air intake chamber and intake manifold.

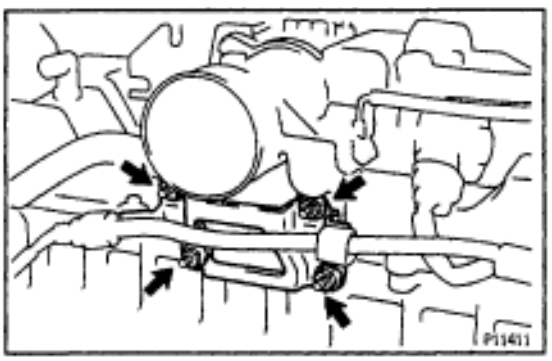

8. DISCONNECT THROTTLE BODY BRACKET FROM THROTTLE BODY AND CYLINDER HEAD

Remove the 4 nuts, and disconnect the throttle body bracket from the throttle body and cylinder head.

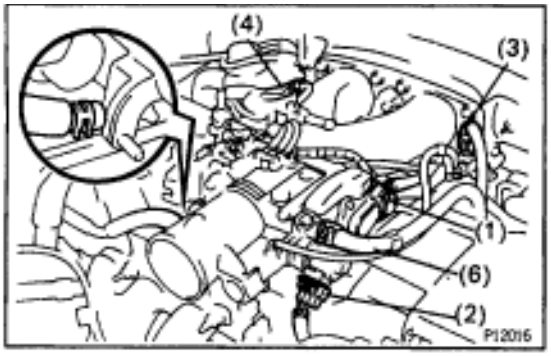

9. REMOVE THROTTLE BODY AND INTAKE AIR CONNECTOR ASSEMBLY

(a) Disconnect these connectors and hoses:
- (1) Throttle position sensor connector
- (2) IAC valve connector
- (3) VSV connector for EGR
- (4) PCV hose from intake air connector
- (5) Water bypass hose (from No.2 water bypass pipe) from throttle body
- (6) California only:

Air hose from IAC valve

(b) Remove the nut holding the VSV for the ACIS to the air intake chamber.

(c) Remove the 4 bolts and 2 nuts holding the intake air connector to the air intake chamber.

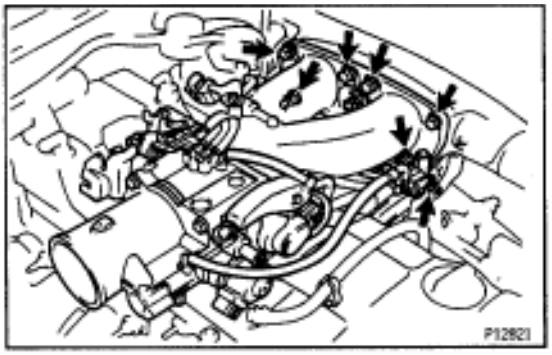

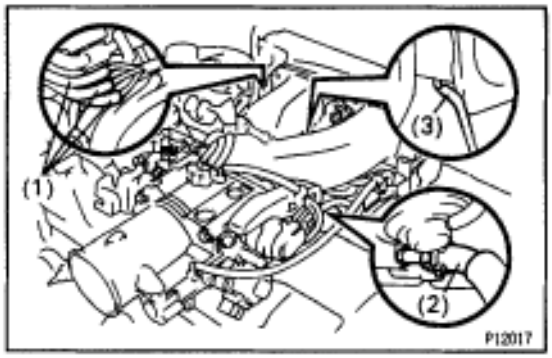

(d) Disconnect these hoses, and remove the throttle body, intake air connector assembly and gasket.
- (1) 3 vacuum hoses (from No.2 vacuum pipe) from No.1 vacuum pipe
- (2) Water bypass hose (from water outlet) from throttle body
- (3) Vacuum hose (from actuator for ACIS) from No.1 vacuum pipe

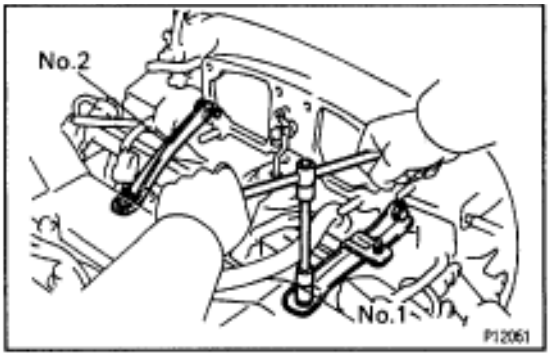

10. REMOVE AIR INTAKE CHAMBER STAYS

(a) Remove the bolt, nut and No.1 stay.

(b) Remove the bolt, nut and No.2 stay.

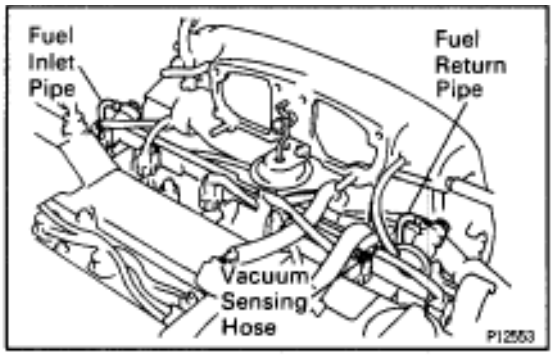

11. Except California:
DISCONNECT VACUUM SENSING HOSE FROM FUEL PRESSURE REGULATOR

12. DISCONNECT FUEL INLET PIPE FROM DELIVERY PIPE

Remove the union bolt and 2 gaskets, and disconnect the inlet pipe from the delivery pipe.

CAUTION:

Put a shop towel under the delivery pipe.

Slowly loosen the union bolt.

13. DISCONNECT FUEL RETURN PIPE FROM FUEL PRESSURE REGULATOR

Remove the union bolt and 2 gaskets, and disconnect the fuel pipe from the pressure regulator.

CAUTION:

Put a shop towel under the pressure regulator.

Slowly loosen the union bolt.

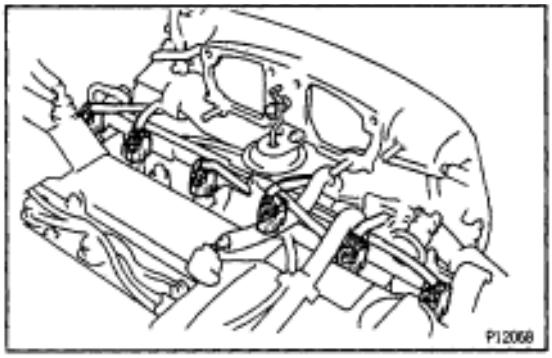

14. DISCONNECT INJECTOR CONNECTORS

Disconnect the 6 injector connectors.

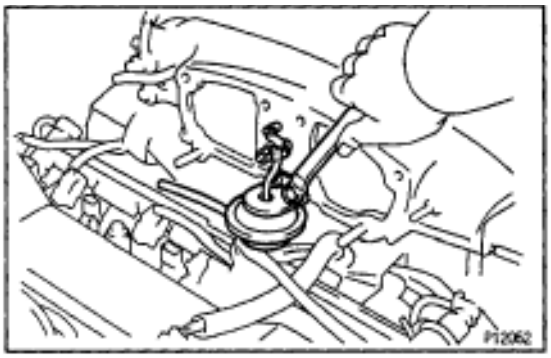

15. DISCONNECT ACTUATOR FOR ACIS FROM AIR INTAKE CHAMBER

(a) Remove the 2 bolts, and disconnect the actuator from the air intake chamber.

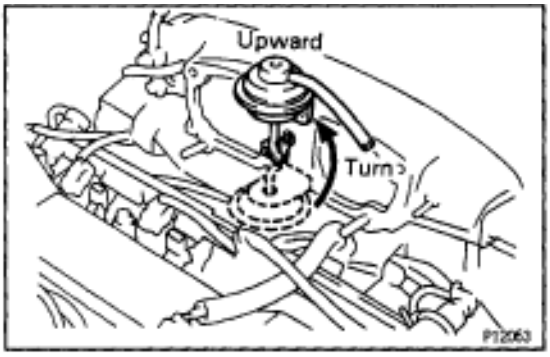

(b) Wrap the actuator with adhesive tape and attach it to the intake chamber.

NOTICE: Do not apply any force on the actuator rod and prevent the rod clip from detaching.

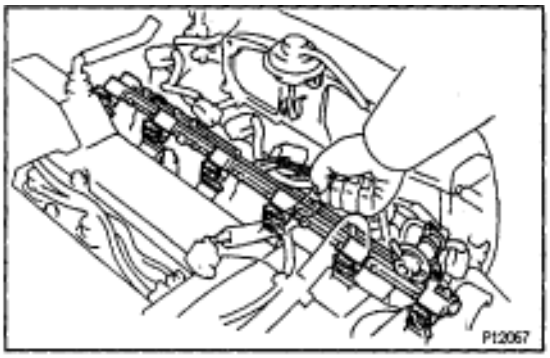

16. REMOVE DELIVERY PIPE AND INJECTORS

(a) Remove the 3 bolts and delivery pipe together with the 6 injectors.

NOTICE: Be careful not to drop the injectors when removing the delivery pipe.

(b) Remove the 6 insulators (Except California) and 3 spacers from the intake manifold.

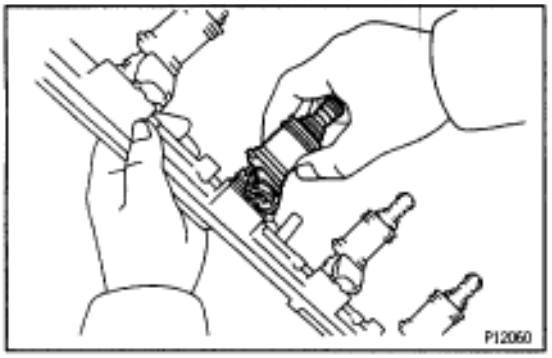

(c) Pull out the 6 injectors from the delivery pipe.
(d) California:
Remove the 2 O–rings, insulator and grommet from each injector.
(e) Except California:
Remove the O–ring and grommet from each injector.

INJECTORS INSPECTION

1. INSPECT INJECTOR INJECTION

CAUTION: Keep injector clear of sparks during the test.

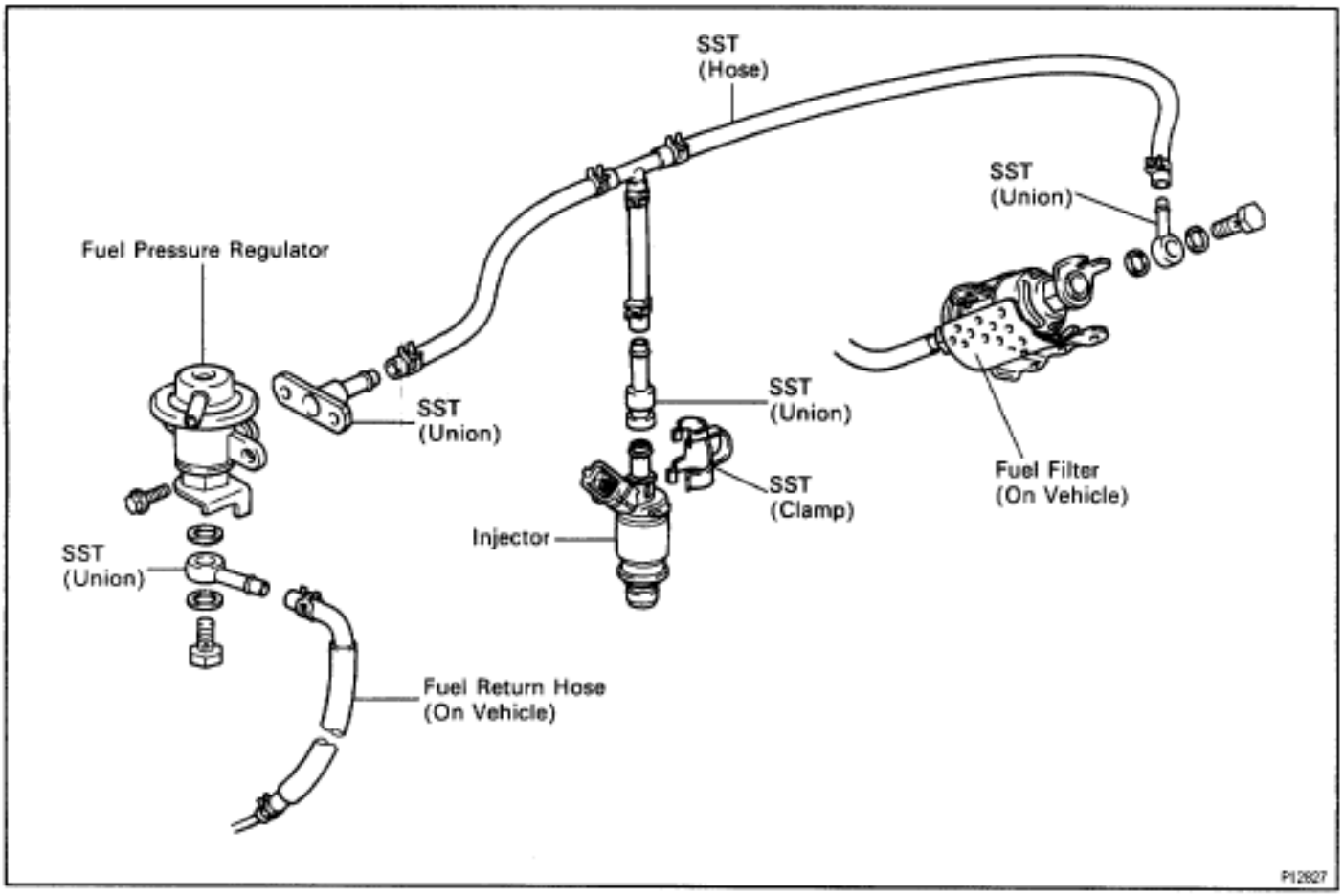

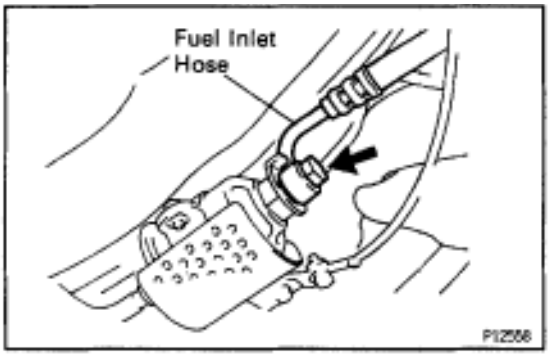

(a) Remove the union bolt and 2 gaskets, and disconnect the fuel inlet hose from the fuel filter outlet.

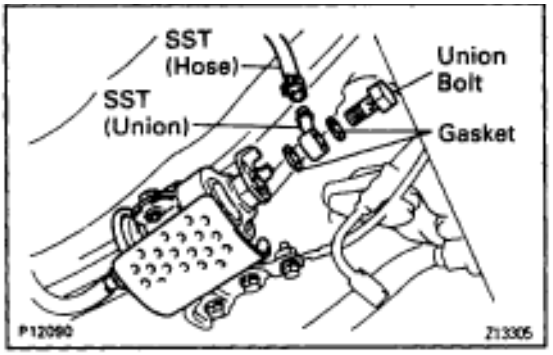

(b) Connect SST (hose) to the fuel filter outlet with SST (union), the 2 gaskets and union bolt.
SST 09268–41045 (90405–09015)
Torque: 29 N·m (300 kgf·cm, 22 ft·lbf)

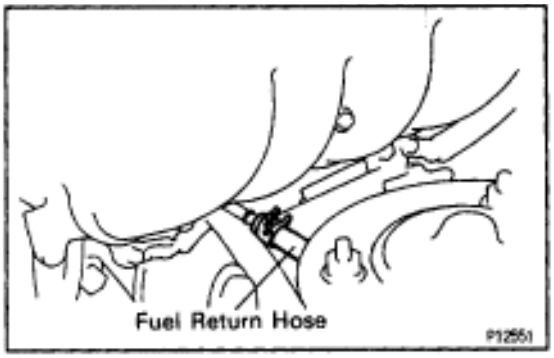

(c) Disconnect the fuel return hose from the fuel return pipe.
(d) Remove the fuel pressure regulator from the delivery pipe. (See step 3 in fuel pressure regulator removal)

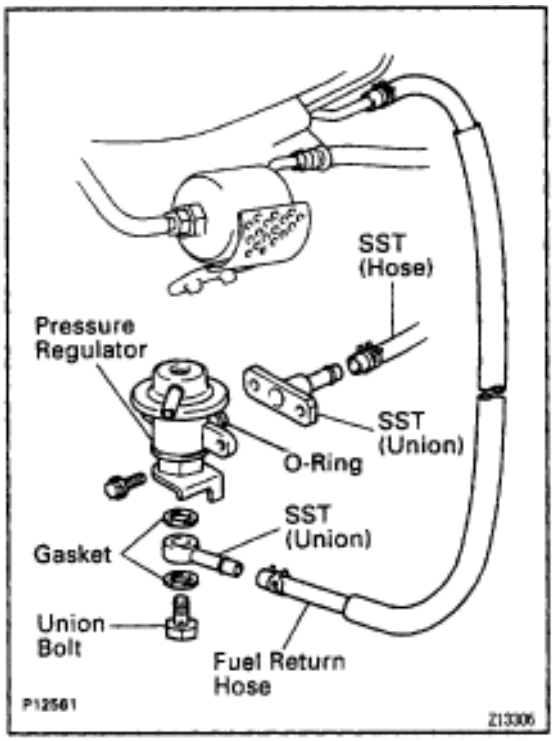

(e) Install the O–ring to the fuel inlet of the pressure regulator.
(f) Connect SST (hose) to the fuel inlet of the pressure regulator with SST (union) and the 2 bolts.
SST 09268–41045 (09268–41090)
(g) Connect the fuel return hose to the fuel outlet of the pressure regulator with SST (union), the 2 gaskets and union bolt.
SST 09268–41045 (09268–41070)

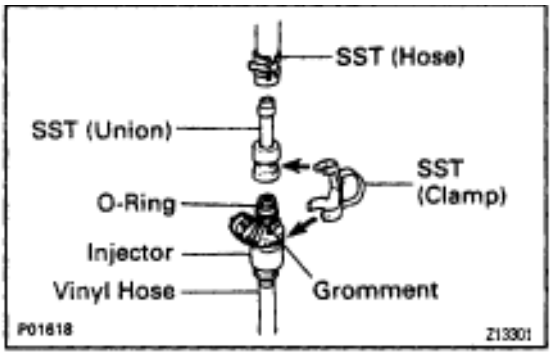

(h) Install the grommet and O–ring to the injector.
(i) Connect SST (hose) to the injector with SST (union), and hold the injector and union with SST (clamp).
SST 09268–41045
(j) Put the injector into the graduated cylinder.
HINT: Install a suitable vinyl hose onto the injector to prevent gasoline from splashing out.

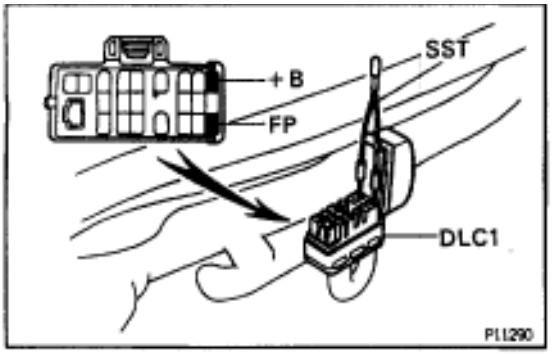

(k) Using SST, connect terminals +B and FP of the DLC 1.
SST 09843–18020

(l) Reconnect the negative (–) terminal cable to the battery.

(m) Turn the ignition switch ON.
NOTICE: Do not start the engine.

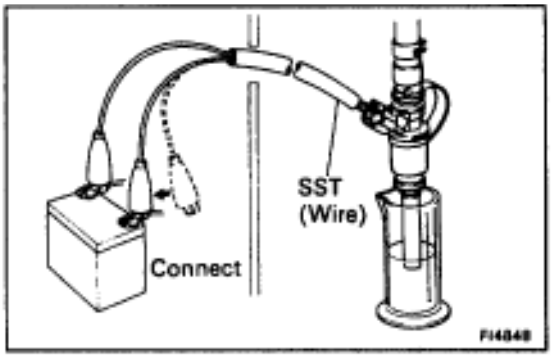

(n) Connect SST (wire) to the injector and battery for 15 seconds, and measure the injection volume with a graduated cylinder. Test each injector 2 or 3 times.
SST 09842–30070
Injection volume:
70–88 cm^3 (4.3–5.4 cu in.) per 15 sec.
Difference between each injector:
9 cm^3 (0.5 cu in.) or less
If the injection volume is not as specified, replace the injector.

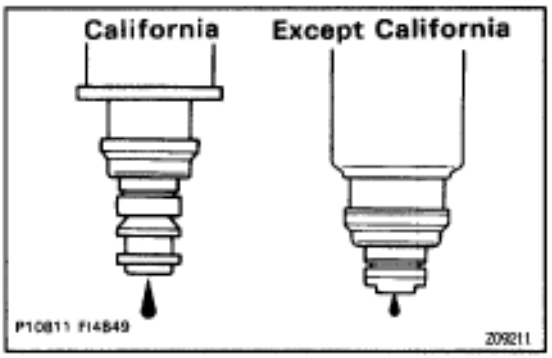

2. INSPECT LEAKAGE

(a) In the condition above, disconnect the tester probes of SST (wire) from the battery and check the fuel leakage from the injector.
SST 09842–30070
Fuel drop:
One drop or less per minute

(b) Disconnect the negative (–) terminal cable from the battery.

(c) Remove the SST.
SST 09268–41045 and 09843–18020

(d) Reconnect the fuel inlet hose to the fuel filter with 2 new gaskets and union bolt.
Torque: 29 N·m (300 kgf·cm, 22 ft·lbf)

(e) Reconnect the fuel return hose to the fuel return pipe.

(f) Reinstall the fuel pressure regulator to the delivery pipe. (See step 1 in fuel pressure regulator installation)

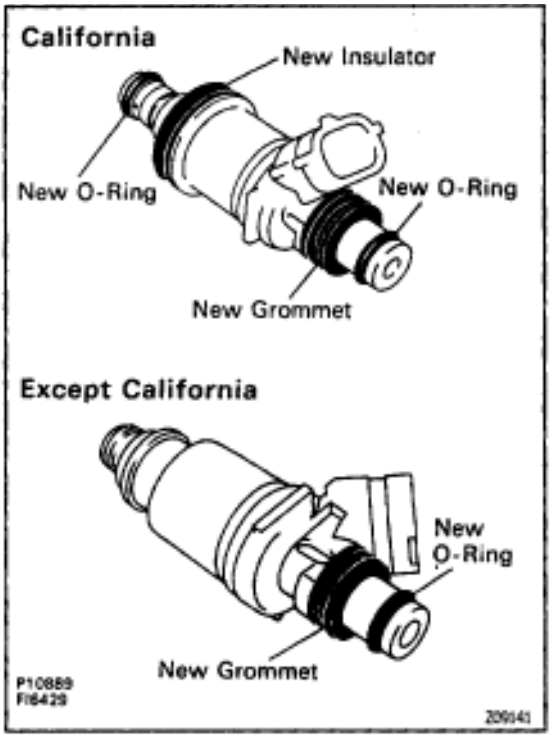

INJECTORS INSTALLATION

1. INSTALL INJECTORS AND DELIVERY PIPE

(a) California:
Install new insulator and grommet to each injector.

(b) Except California:
Install a new grommet to each injector.

(c) California:
Apply a light coat of gasoline to 2 new O–rings, and install them to each injector.

(d) Except California:
Apply a light coat of gasoline to a new O–ring, and install it to each injector.

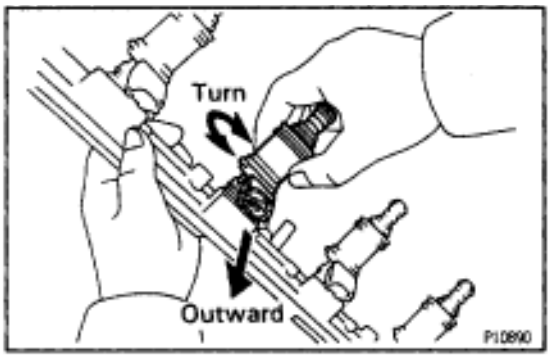

(e) While turning the injector clockwise and counterclockwise, push it to the delivery pipe. Install the 6 injectors.

(f) Position the injector connector outward.

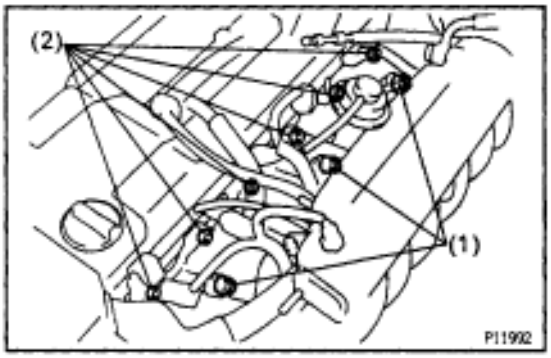

(g) Install these parts to the intake manifold:
(1) 3 spacers
(2) Except California:
6 new insulators

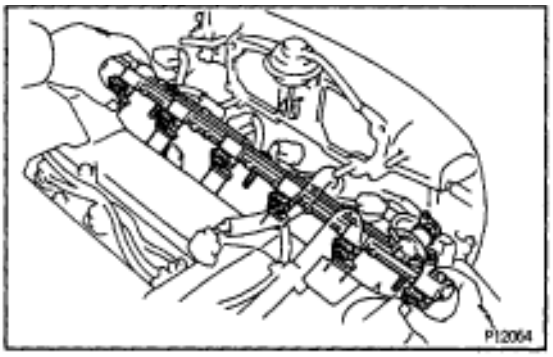

(h) Install the 3 bolts to the delivery pipe.

(i) California:
Apply a light coat of gasoline to O–ring on each injector.

(j) Attach the 6 injectors together with the delivery pipe to the intake manifold.

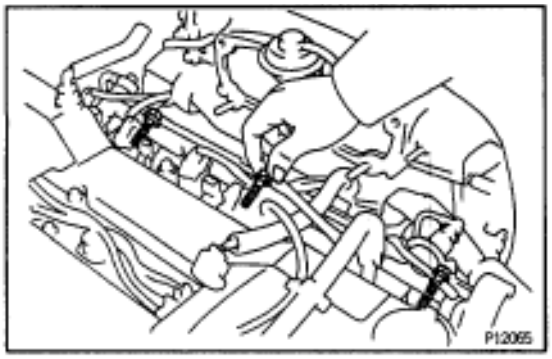

(k) Temporarily install the 3 bolts holding the delivery pipe to the intake manifold.

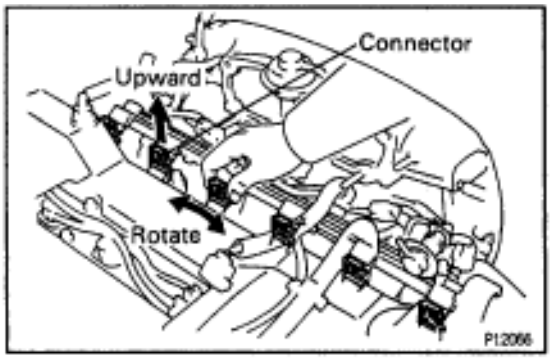

(l) Check that the injectors rotate smoothly.
HINT: If injectors do not rotate smoothly, the probable cause is incorrect installation of O–rings. Replace the O–rings.

(m) Position the injector connector upward.

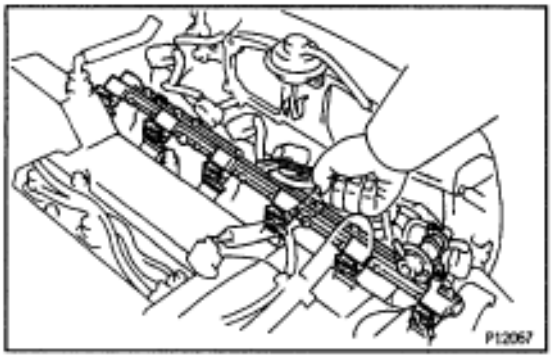

(n) Tighten the 3 bolts holding the delivery pipe to the intake manifold.
Torque: 21 N·m (210 kgf·cm, 15 ft·lbf)

2. INSTALL ACTUATOR FOR ACIS

(a) Install the actuator with the 2 bolts.
Torque: 6.8 N·m (70 kgf·cm, 61 in.·lbf)

(b) Inspect the intake air control valve.
(See intake air control valve inspection in ACIS)

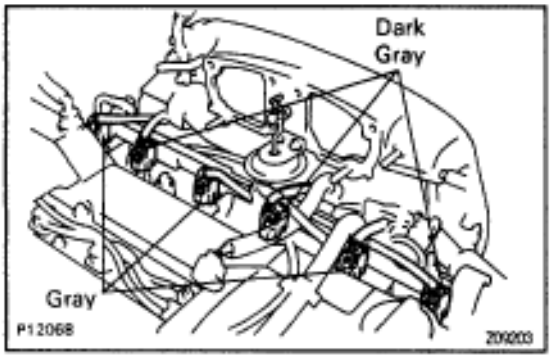

3. CONNECT INJECTOR CONNECTORS
Connect the 6 injector connectors.
HINT: The No.1, No.3 and No.5 injector connectors are dark gray, and the No.2, No.4 and No.6 injector connectors are gray.

4. CONNECT FUEL INLET PIPE TO DELIVERY PIPE
Connect the inlet pipe with 2 new gaskets and the union bolt.
Torque: 41 N·m (420 kgf·cm, 30 ft·lbf)

5. CONNECT FUEL RETURN PIPE TO FUEL PRESSURE REGULATOR
Connect the return pipe with 2 new gaskets and the union bolt.
Torque: 27 N·m (280 kgf·cm, 20 ft·lbf)

6. Except California:
CONNECT VACUUM SENSING HOSE TO FUEL PRESSURE REGULATOR

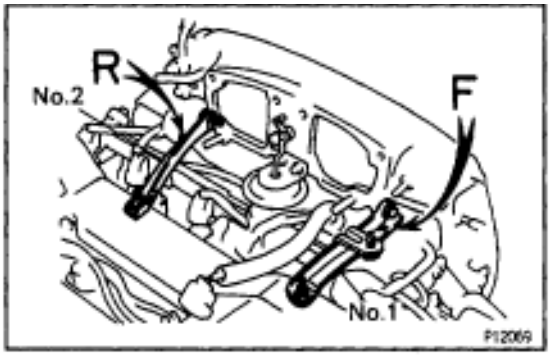

7. INSTALL AIR INTAKE CHAMBER STAYS

HINT: The No.1 stay is marked with ”F”, and No.2 stay is marked with ”R”.

(a) Install the No.1 stay with the bolt and nut.
Torque: 18 N·m (185 kgf·cm, 13 ft·lbf)

(b) Install the No.2 stay with the bolt and nut.
Torque: 18 N·m (185 kgf·cm, 13 ft·lbf)

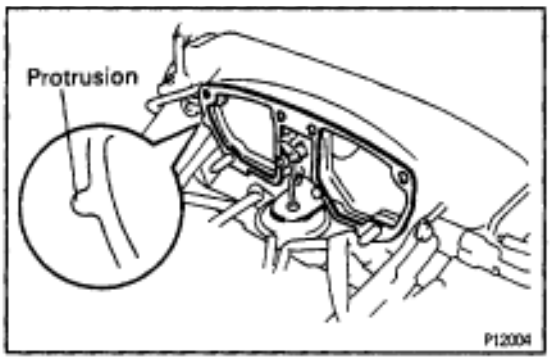

8. INSTALL THROTTLE BODY AND INTAKE AIR CONNECTOR ASSEMBLY

(a) Install a new gasket to the air intake chamber, facing the protrusion rearward.

(b) Place the throttle body and intake air connector assembly on the cylinder head.

(c) Connect these hoses:
- 3 vacuum hoses (from No.2 vacuum pipe) to No.1 vacuum pipe
- Water bypass hose (from water outlet) to throttle body
- Vacuum hose (from actuator for ACIS) to No.1 vacuum pipe

(d) Install the 4 bolts and 2 nuts holding the intake air connector to the air intake chamber.
Torque: 27 N·m (270 kgf·cm, 20 ft·lbf)

(e) Install the nut holding the VSV for the ACIS to the air intake chamber.

(f) Connect these connectors and hoses:
- Throttle position sensor connector
- IAC valve connector
- VSV connector for EGR
- PCV hose to intake air connector
- Water bypass hose (from No.2 water bypass pipe) to throttle body
- California only:
  Air hose to IAC valve

9. INSTALL THROTTLE BODY BRACKET
Torque: 21 N·m (210 kgf·cm, 15 ft·lbf)

10. INSTALL NO.2 VACUUM PIPE
Torque: 27 N·m (270 kgf·cm, 20 ft·lbf)

11. CONNECT EGR GAS TEMPERATURE SENSOR CONNECTOR

12. INSTALL EGR PIPE

(a) Temporarily install the union nut of the EGR pipe.

(b) Install a new gasket and the EGR pipe to the cylinder head with the 2 bolts.
Torque: 27 N·m (270 kgf·cm, 20 ft·lbf)

(c) Tighten the union nut of the EGR pipe.

Torque: 64 N·m (650 kgf·cm, 47 ft·lbf)

13. **California only:**
    INSTALL VSV FOR FUEL PRESSURE CONTROL
14. **INSTALL INTAKE AIR CONNECTOR PIPE**
15. **CONNECT CONTROL CABLES TO THROTTLE BODY**
16. **FILL WITH ENGINE COOLANT**
17. **CHECK FOR FUEL LEAKS**
    (See item 5 in fuel system in precaution)

FUEL PRESSURE PULSATION DAMPER COMPONENTS FOR REMOVAL AND INSTALLATION

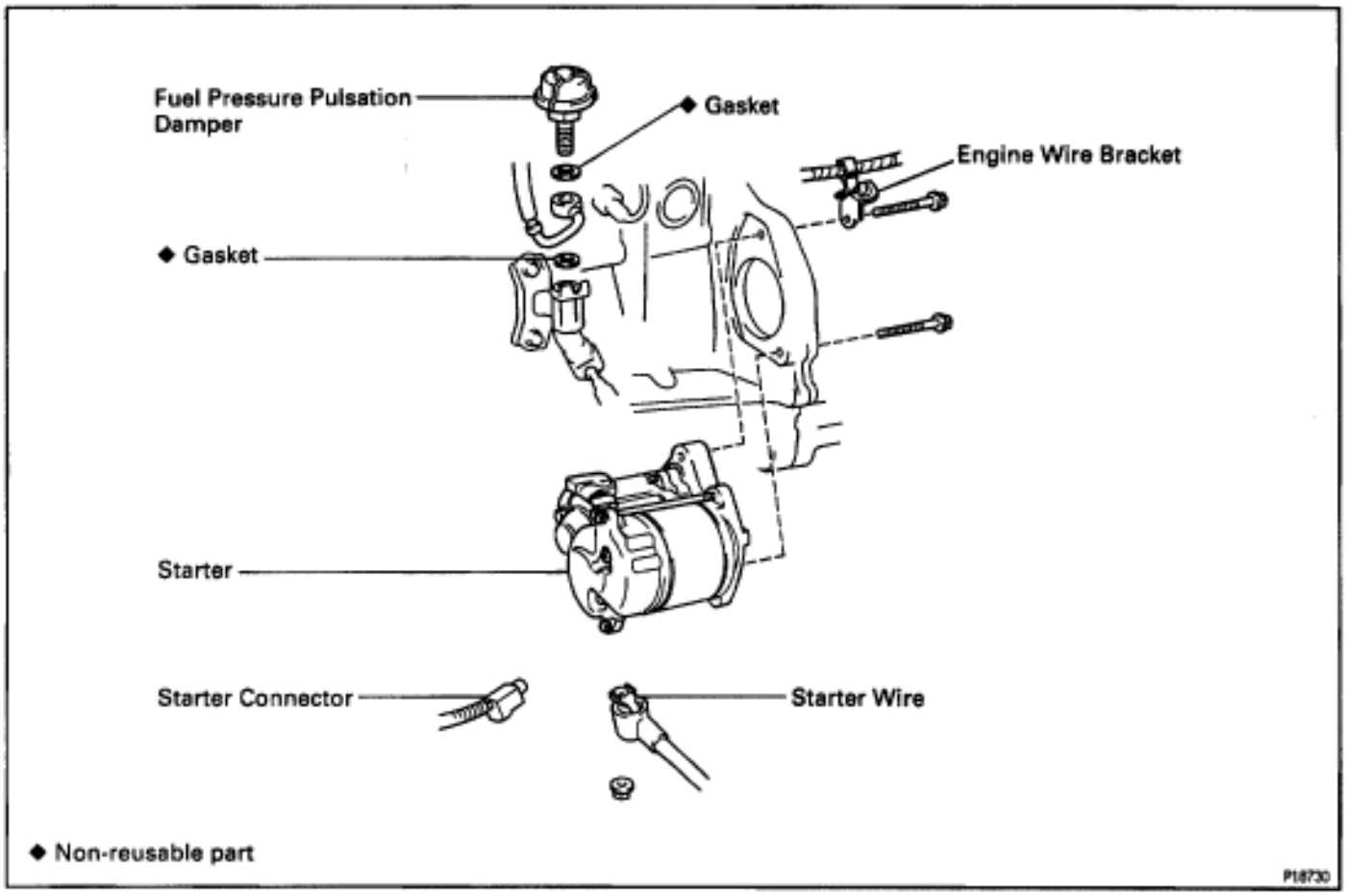

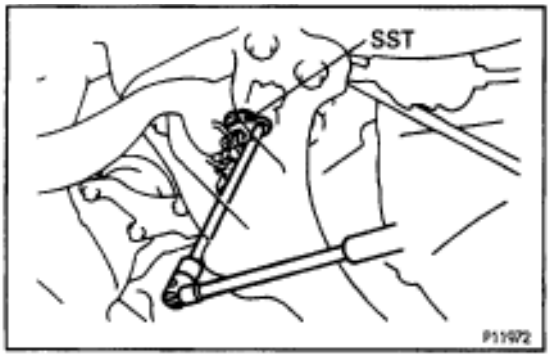

FUEL PRESSURE PULSATION DAMPER REMOVAL

1. **REMOVE STARTER**
   (See starter removal in Starting System)
2. **REMOVE FUEL PRESSURE PULSATION DAMPER**

(a) Remove the pulsation damper and upper gasket.

(b) Disconnect the fuel inlet pipe from the fuel pipe support, and remove the lower gasket.

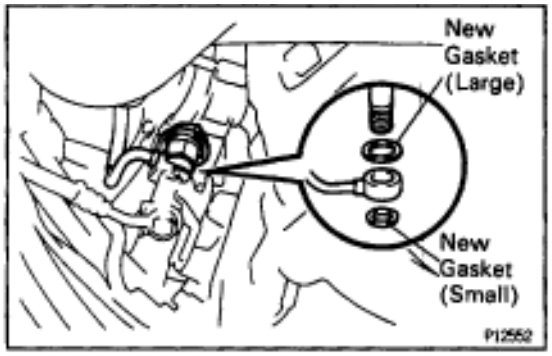

FUEL PRESSURE PULSATION DAMPER INSTALLATION

1. INSTALL FUEL PRESSURE PULSATION DAMPER

(a) Install the fuel inlet pipe and pulsation damper with 2 new gaskets.

HINT: Different sized gaskets are used for the upper (large size) and lower (small size).

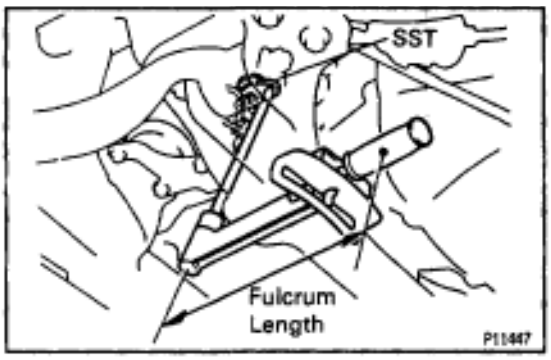

(b) Using SST, tighten the pulsation damper.

SST 09612–24014 (09617–24011)

Torque:

41 N·m (420 kgf·cm, 30 ft·lbf)

35 N·m (350 kgf·cm, 25 ft·lbf) for SST

HINT: Use a torque wrench with a fulcrum length of 30 cm (11.81 in.).

2. INSTALL STARTER

(See starter installation in Starting System)

4. CHECK FOR FUEL LEAKS

(See item 5 in fuel system in precaution)

FUEL TANK AND LINE COMPONENTS

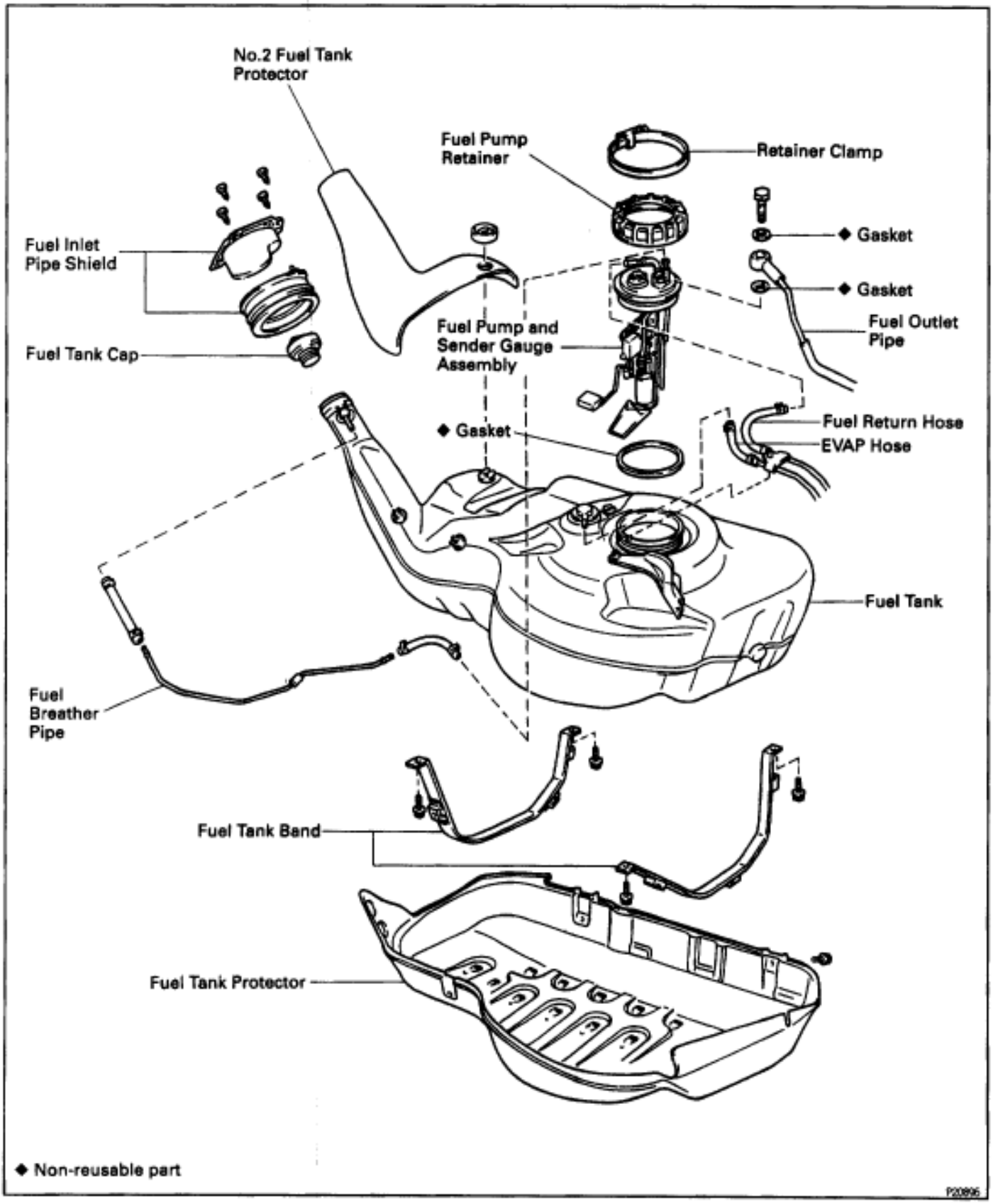

PRECAUTIONS

1. **Always use new gaskets when replacing the fuel tank or component parts.**
2. **Apply the proper torque to all parts tightened.**

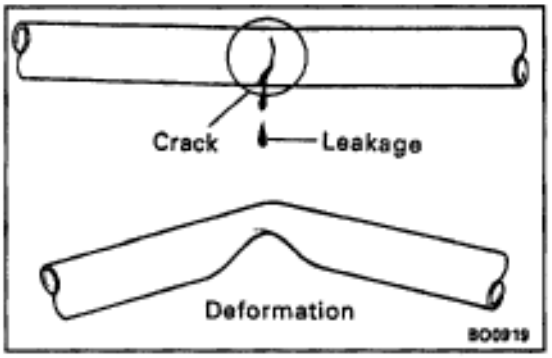

FUEL LINES AND CONNECTIONS INSPECTION

(a) Check the fuel lines for cracks or leakage, and all connections for deformation.

(b) Check the fuel tank vapor vent system hoses and connections for looseness, sharp bends or damage.

(c) Check the fuel tank for deformation, cracks, fuel leakage or tank band looseness.

(d) Check the filler neck for damage or fuel leakage.

(e) Hose and tube connections are as shown in the illustration. If a problem is found, repair or replace the part as necessary.

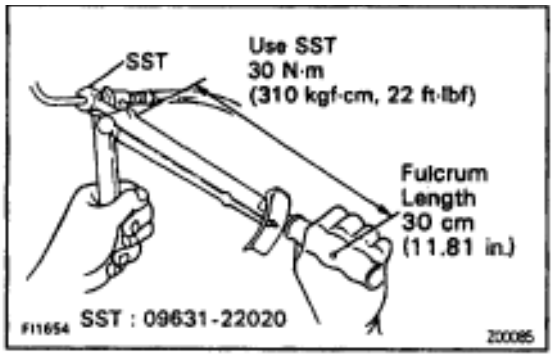

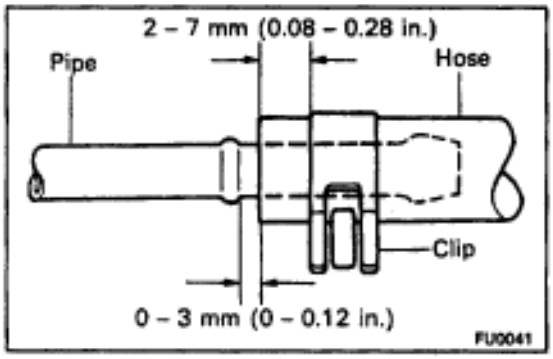

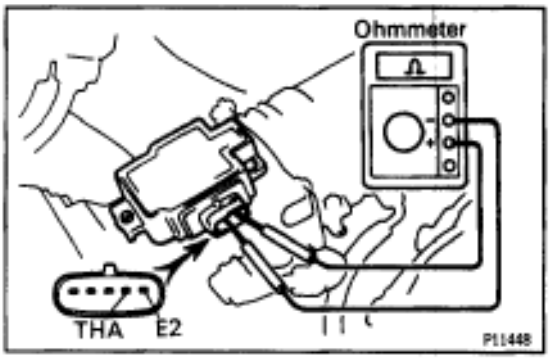

VOLUME AIR FLOW (VAF) METER

ON–VEHICLE INSPECTION

INSPECT VAF METER RESISTANCE

(a) Disconnect the VAF meter connector.

(b) Using an ohmmeter, measure the resistance between terminals THA and E2.

Between terminals	Resistance	Temperature
THA–E2	10–20 kΩ	–20˚C (–4˚F)
THA–E2	4–7 kΩ	0˚C (32˚F)
THA–E2	2–3 kΩ	20˚C (68˚F)
THA–E2	0.9–1.3 kΩ	40˚C (104˚F)
THA–E2	0.4–0.7 kΩ	60˚C (140˚F)

If the resistance is not as specified, replace the VAF meter.

(c) Reconnect the VAF meter connector.

COMPONENTS FOR REMOVAL AND INSTALLATION

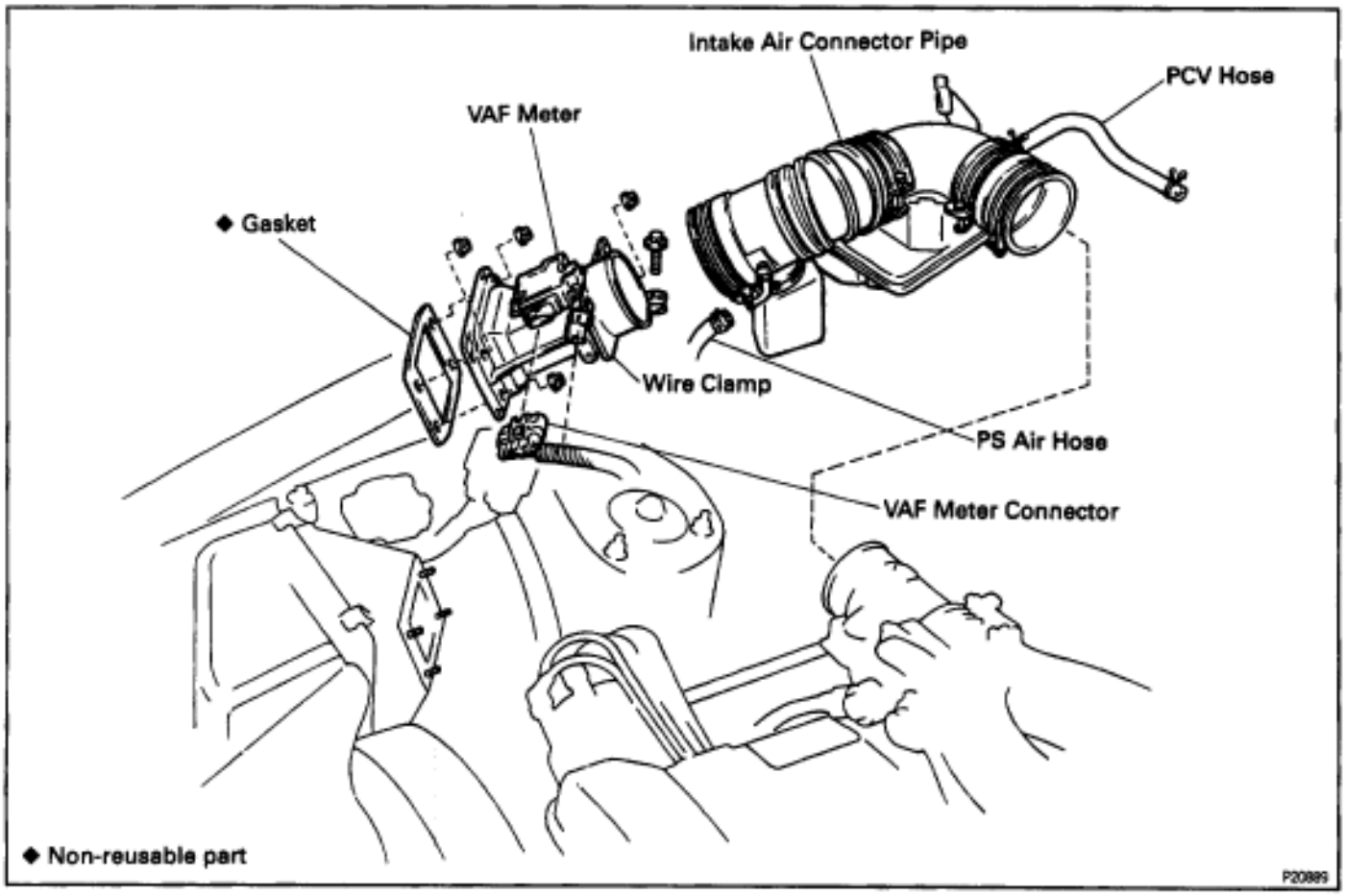

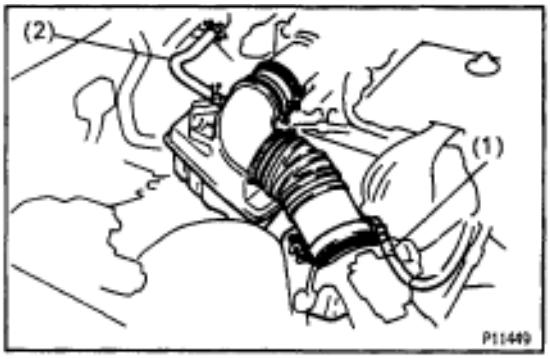

VAF METER REMOVAL

Installation is in the reverse order of removal.

1. REMOVE INTAKE AIR CONNECTOR PIPE

(a) Disconnect these hoses:
  (1) PS air hose from air connector pipe
  (2) PCV hose from No.2 cylinder head cover

(b) Loosen the 2 hose clamps, and remove the air connector pipe together with the hoses.

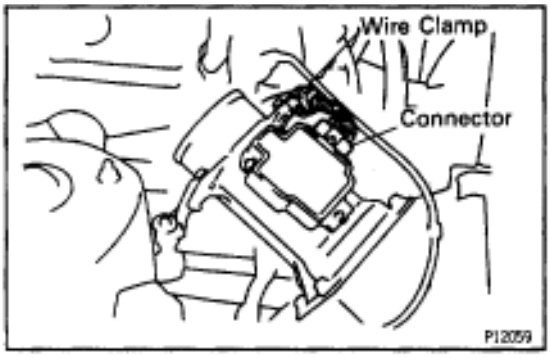

2. REMOVE VAF METER

(a) Disconnect the VAF meter connector.

(b) Disconnect the VAF meter wire from the wire clamp on the bracket.

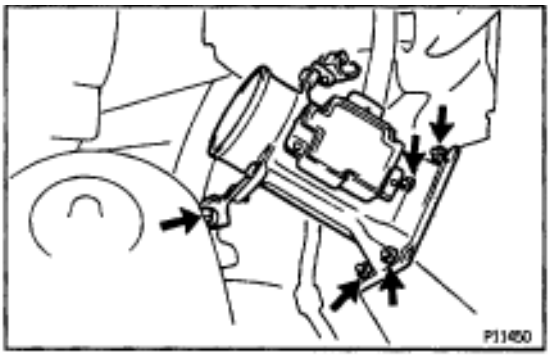

(c) Remove the 4 nuts, bolt, VAF meter and gasket.
Torque: 10 N·m (100 kgf·cm, 7 ft·lbf)

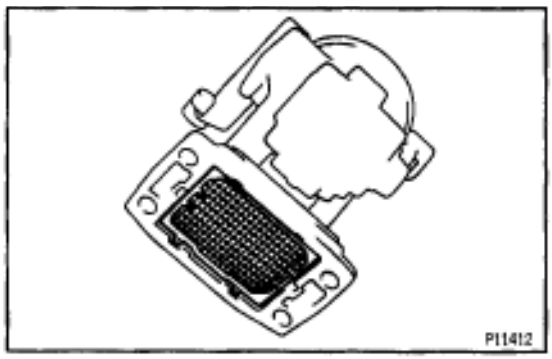

VAF METER INSPECTION

INSPECT VAF METER

Check that the honeycomb is neither deformed nor damaged.

If necessary, replace the VAF meter.

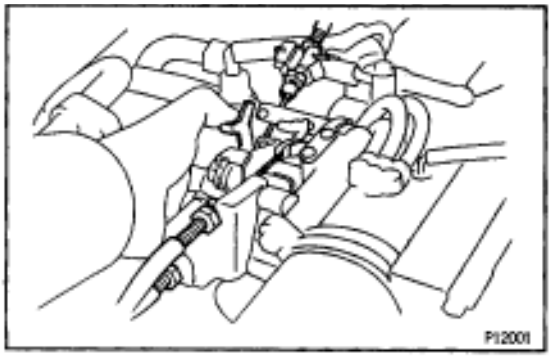

THROTTLE BODY

ON–VEHICLE INSPECTION

Throttle Body

INSPECT THROTTLE BODY

(a) Check that the throttle linkage moves smoothly.

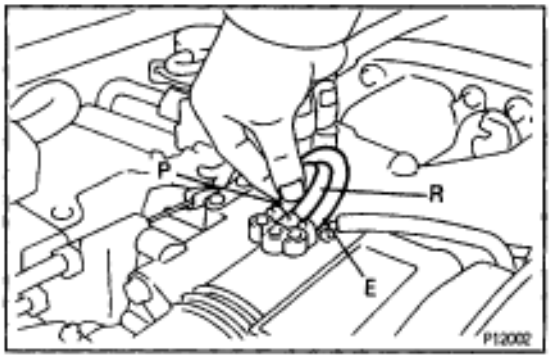

(b) Check the vacuum at each port.
- Start the engine.
- Check the vacuum with your finger.

Port name	At idle	At 3,000 rpm
P	No vacuum	Vacuum
E	No vacuum	Vacuum
R	No vacuum	Vacuum

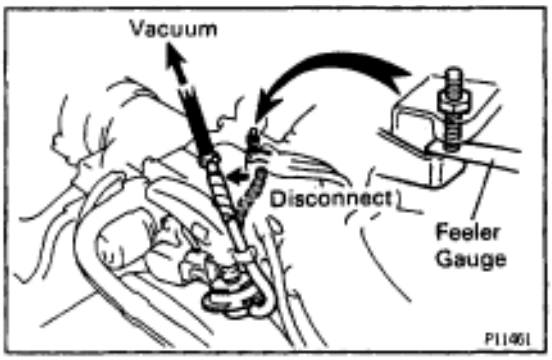

Throttle Position Sensor

INSPECT THROTTLE POSITION SENSOR

(a) Disconnect the throttle position sensor connector.
(b) Disconnect the throttle opener vacuum hose from the throttle body.
(c) Apply vacuum to the throttle opener.
(d) Insert a feeler gauge between the throttle stop screw and stop lever.

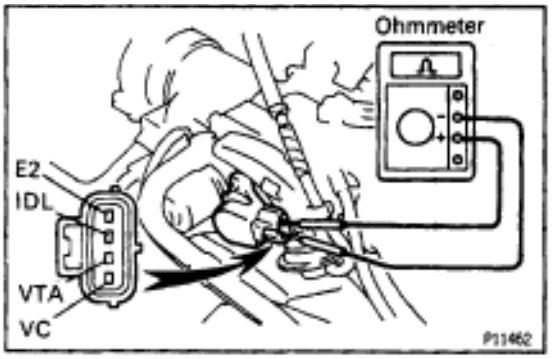

(e) Using an ohmmeter, measure the resistance between each terminal.

Clearance between Lever and stop screw	Between terminals	Resistance
0 mm (0 in.)	VTA–E2	0.34–6.3 kΩ
0.40 mm (0.016 in.)	IDL–E2	0.5 kΩ or less
0.60 mm (0.024 in.)	IDL–E2	Infinity
Throttle valve fully Open	VTA–E2	2.4–11.2 kΩ
–	VC–E2	3.1–7.2 kΩ

(f) Reconnect the throttle position sensor connector.
(g) Reconnect the throttle opener vacuum hose to the throttle body.

Dashpot

1. WARM UP ENGINE

Allow the engine to warm up to normal operating temperature.

2. CHECK IDLE SPEED

Idle speed (Transmission in neutral position):

700 ± 50 rpm

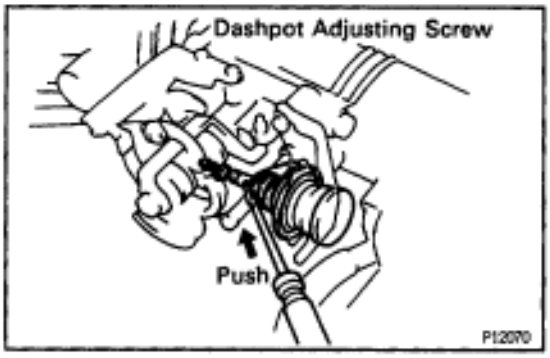

3. CHECK AND ADJUST DASHPOT SETTING SPEED

(a) Disconnect the control cables from the throttle body.

(b) Push the dashpot push rod all the way with a screwdriver.

(c) Check that the dashpot is set.

Dashpot setting speed:

M/T

2,600 ± 400

A/T

1,800 ± 400 rpm

(d) Adjust the dashpot setting speed by turning the dashpot adjusting screw.

(e) Reconnect the control cables to the throttle body.

4. CHECK VTV OPERATION

(a) Maintain the engine speed at 3,500 rpm.

(b) Release the throttle valve, and check that the engine returns to idle in a few seconds.

Throttle Opener

1. WARM UP ENGINE

Allow the engine to warm up to normal operating temperature.

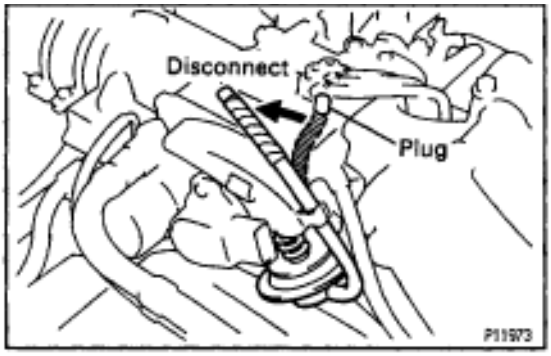

2. CHECK IDLE SPEED

Idle speed (Transmission in neutral position):

700 ± 50 rpm

3. CHECK THROTTLE OPENER SETTING SPEED

(a) Disconnect the throttle opener vacuum hose from the throttle body, and plug the throttle body port.

(b) Maintain the engine speed at 2,500 rpm.

(c) Release the throttle valve.

(d) Check that the throttle opener is set.

Throttle opener setting speed:

1,500 ± 400 rpm

If the throttle opener setting speed is not as specified, replace the throttle body.

(e) Reconnect the throttle opener vacuum hose to the throttle body.

COMPONENTS FOR REMOVAL AND INSTALLATION

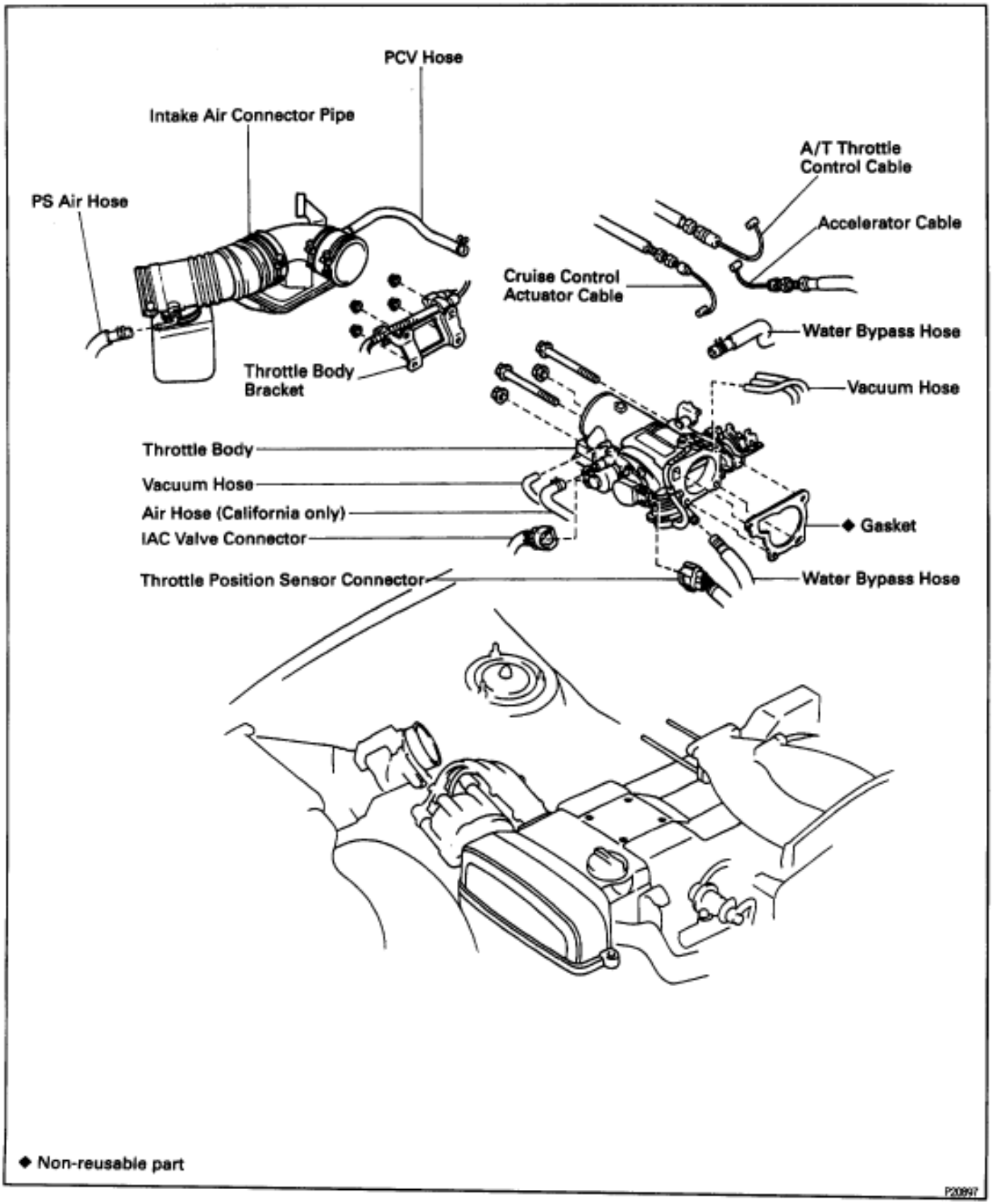

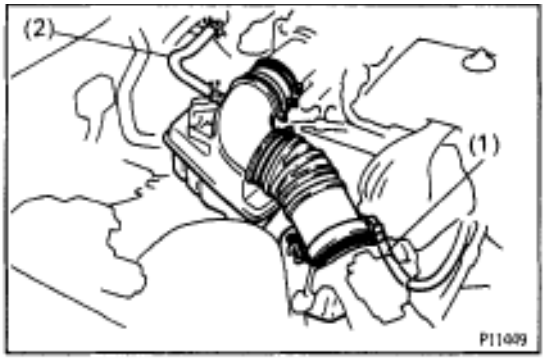

THROTTLE BODY REMOVAL

Installation is in the reverse order of removal.

1. DRAIN ENGINE COOLANT

2. DISCONNECT CONTROL CABLES FROM THROTTLE BODY

3. REMOVE INTAKE AIR CONNECTOR PIPE

(a) Disconnect these hoses:
- (1) PS air hose from air connector pipe
- (2) PCV hose from No.2 cylinder head cover

(b) Loosen the 2 hose clamps, and remove the air connector pipe together with the hoses.

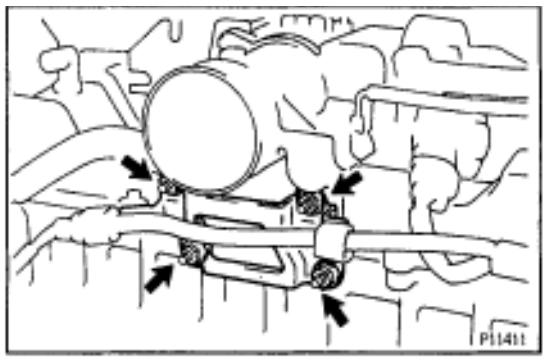

4. DISCONNECT THROTTLE BODY BRACKET FROM THROTTLE BODY AND CYLINDER HEAD

Remove the 4 nuts, and disconnect the throttle body bracket from the throttle body and cylinder head.

Torque: 21 N·m (210 kgf·cm, 15 ft·lbf)

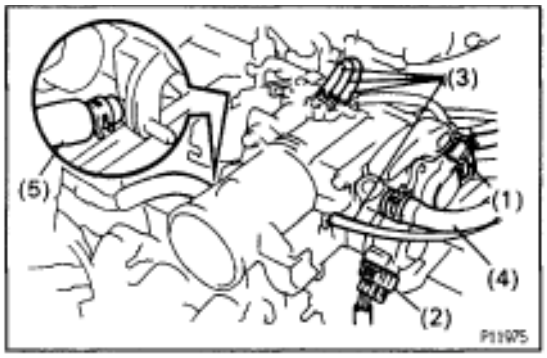

5. REMOVE THROTTLE BODY

(a) Disconnect these connectors and hoses from the throttle body:
- (1) Throttle position sensor connector
- (2) IAC valve connector
- (3) 4 vacuum hoses
- (4) California only:
  Air hose (from intake manifold)
- (5) Water bypass hose (from No.2 water bypass pipe)

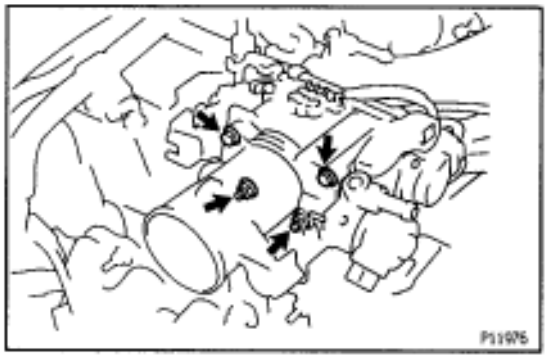

(b) Remove the 2 bolts and 2 nuts.

Torque: 21 N·m (210 kgf·cm, 15 ft·lbf)

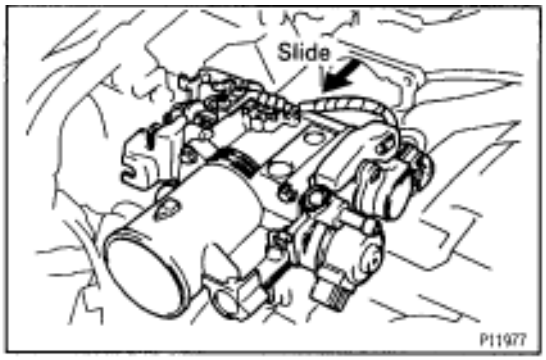

(c) Slightly slide the throttle body away from the intake air connector.

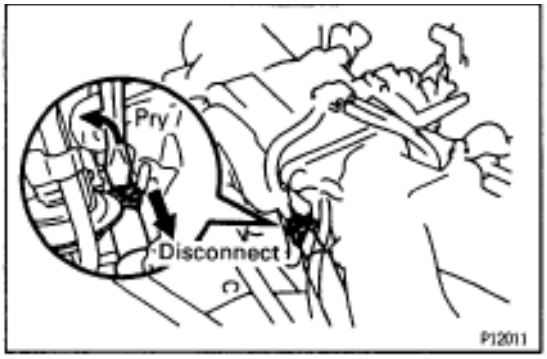

(d) Disconnect the water bypass hose (from the water outlet) from the throttle body.
(e) Remove the throttle body and gasket.
INSTALLATION HINT: Use a new gasket.

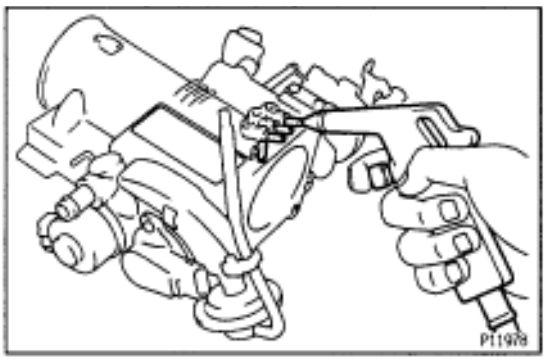

INSPECTION OF THROTTLE BODY

Throttle Body

1. CLEAN THROTTLE BODY

(a) Using a soft brush and carburetor cleaner, clean the cast parts.
(b) Using compressed air, clean all the passages and apertures.
NOTICE: To prevent deterioration, do not clean the throttle position sensor, dashpot and throttle opener.

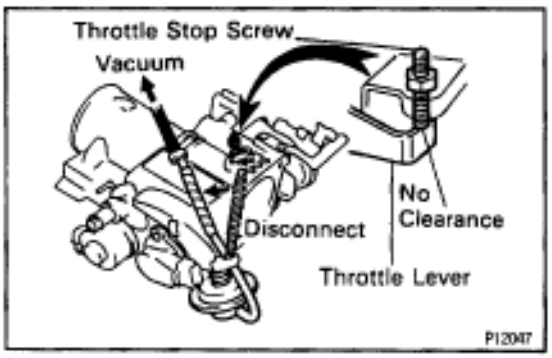

2. INSPECT THROTTLE VALVE

(a) Disconnect the throttle opener vacuum hose from the throttle body.
(b) Apply vacuum to the throttle opener.
(c) Check that there is no clearance between the throttle stop screw and throttle lever when the throttle valve is fully closed.
(d) Reconnect the throttle opener vacuum hose to the throttle body.

Throttle Position Sensor

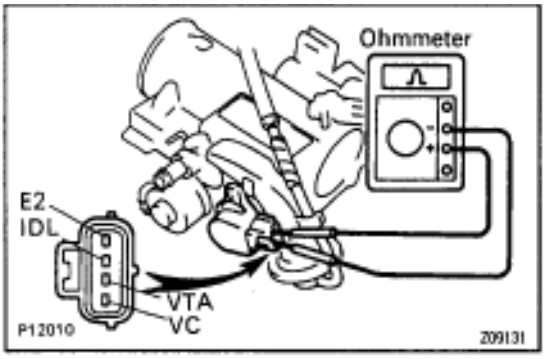

1. INSPECT THROTTLE POSITION SENSOR
(See on–vehicle inspection)

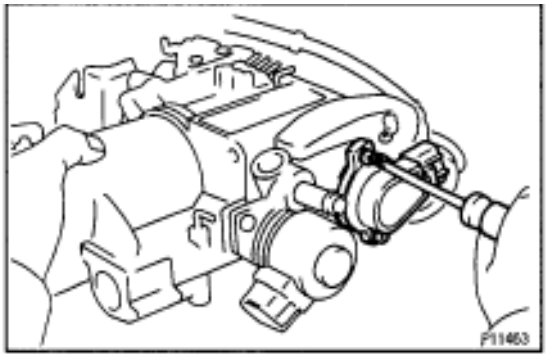

2. IF NECESSARY, ADJUST THROTTLE POSITION SENSOR

(a) Loosen the 2 set screws of the sensor.

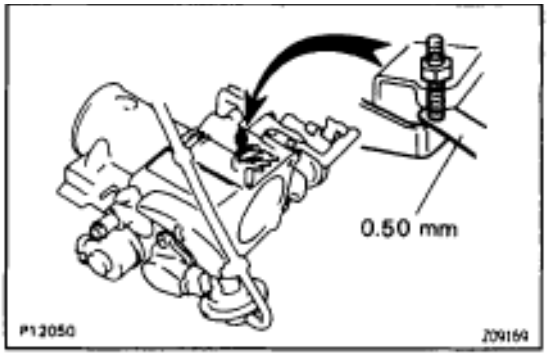

(b) Insert a 0.50 mm (0.020 in.) feeler gauge between the throttle stop screw and stop lever.

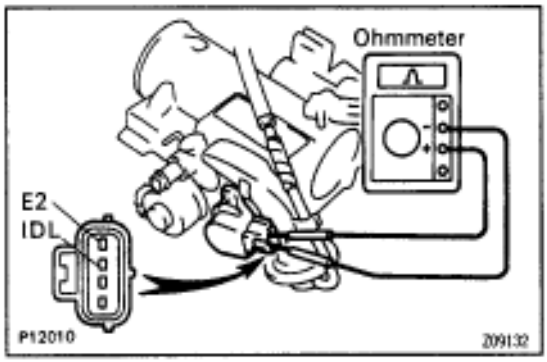

(c) Connect the tester probe of an ohmmeter to the terminals IDL and E2 of the sensor.

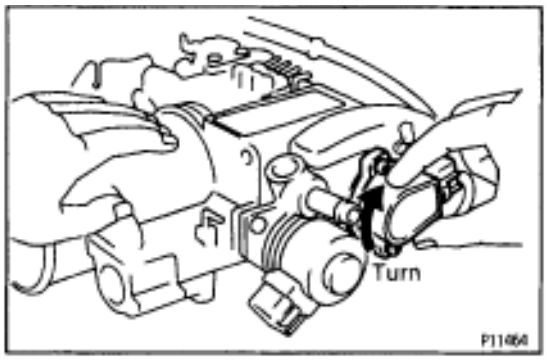

(d) Gradually turn the sensor clockwise until the ohmmeter deflects, and secure it with the 2 set screws.

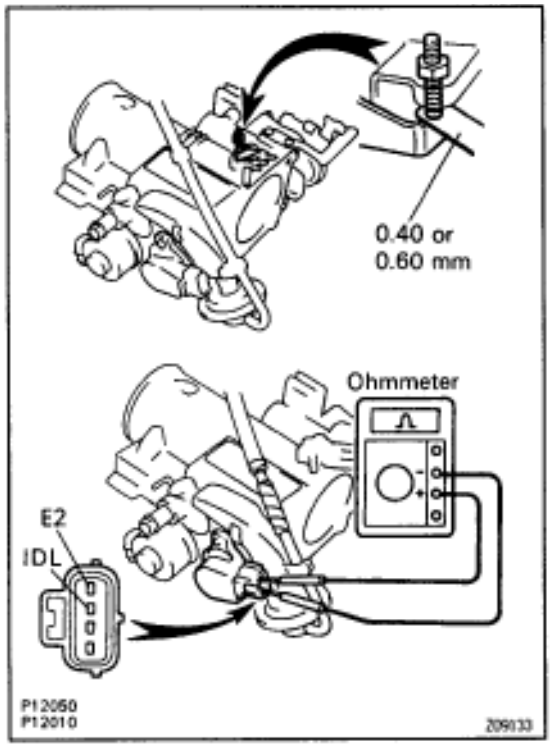

(e) Recheck the continuity between terminals IDL and E2.

Clearance between lever and stop screw	Continuity (IDL–E2)
0.40 mm (0.016 in.)	Continuity
0.60 mm (0.024 in.)	No continuity

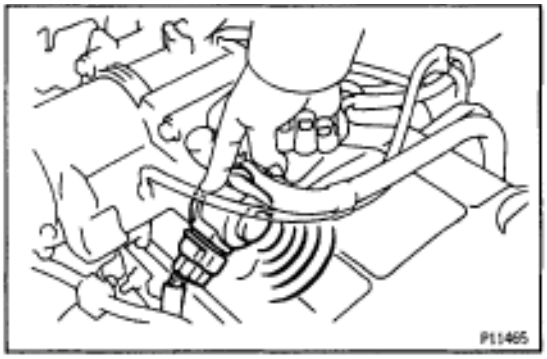

IDLE AIR CONTROL (IAC) VALVE

ON–VEHICLE INSPECTION

1. INSPECT IAC VALVE FOR OPERATING SOUND

Check that there is a clicking sound immediately after stopping the engine.

If operation is not as specified, check the IAC valve, wiring and ECM.

2. California only:

INSPECT AIR ASSIST SYSTEM

A. Warm up engine

Allow the engine to warm up to normal operating temperature.

B. Check idle speed

Idle speed (Transmission in neutral position):

700 ± 50 rpm

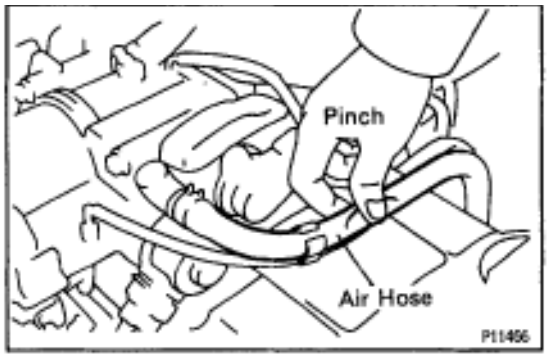

C. Check IAC valve operation

With engine idling, pinch the air hose and check that engine speed drops, and then returns back up to idle speed.

If operation is not as specified, check the IAC valve, wiring and ECM.

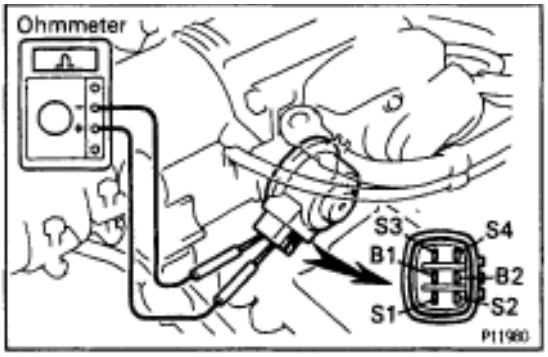

3. INSPECT IAC VALVE RESISTANCE

Using an ohmmeter, measure the resistance between the terminals (B1 (or B2) to others).

Resistance:

At 20°C (68°F) 18–22 Ω

If the resistance is not as specified, replace the IAC valve.

COMPONENTS FOR REMOVAL AND INSTALLATION

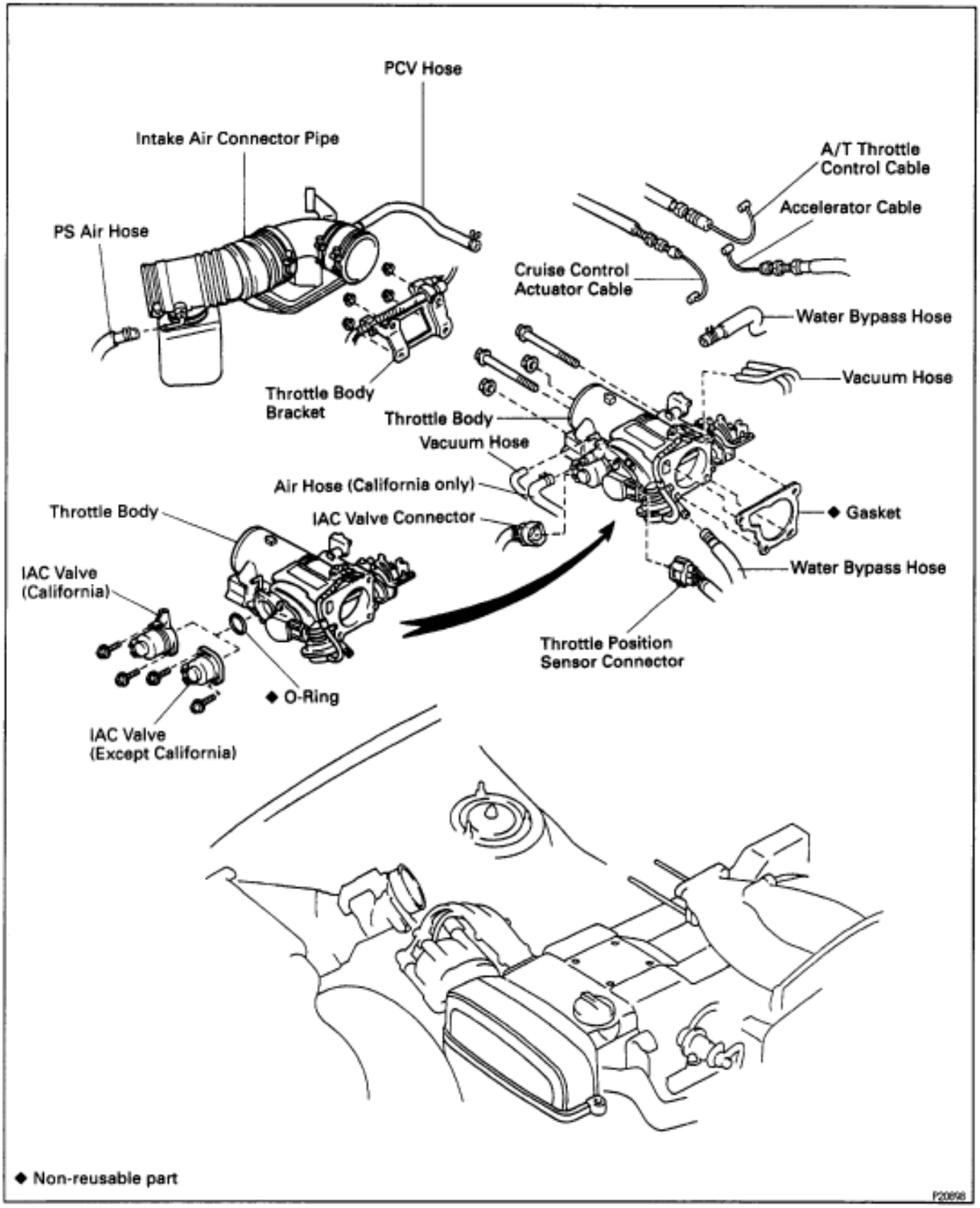

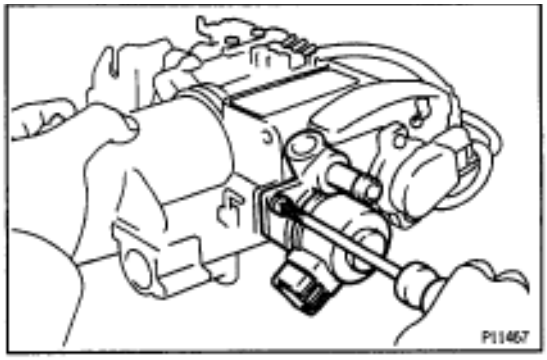

IAC VALVE REMOVAL

1. REMOVE THROTTLE BODY
(See throttle body removal)

2. REMOVE IAC VALVE FROM THROTTLE BODY
Remove the 2 screws, IAC valve and O–ring.

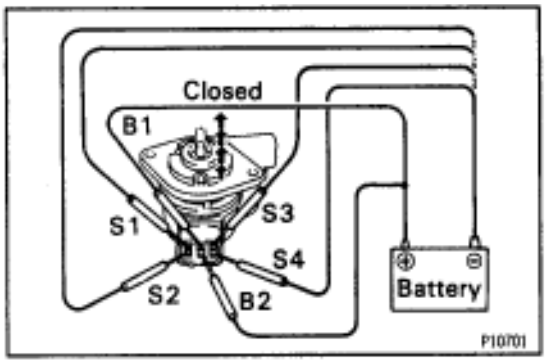

IAC VALVE INSPECTION

INSPECT IAC VALVE OPERATION

(a) Apply battery voltage to terminals B1 and B2, and while repeatedly grounding S1–S2–S3–S4–S 1 in sequence, and check that the valve moves toward the closed position.

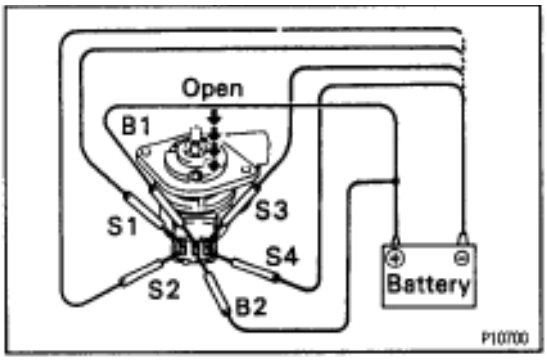

(b) Apply battery voltage to terminals B1 and B2, and while repeatedly grounding S4–S3–S2–S1–S 4 in sequence, check that the valve moves toward the open position.
If operation is not as specified, replace the IAC valve.

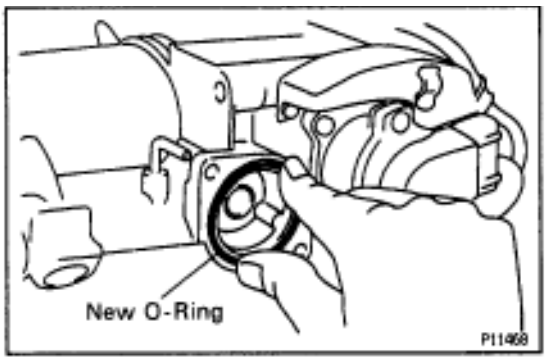

IAC VALVE INSTALLATION

1. INSTALL IAC VALVE TO THROTTLE BODY

(a) Install a new O–ring on the throttle body.
(b) Install the IAC valve with the 2 screws.

2. INSTALL THROTTLE BODY
(See throttle body installation)

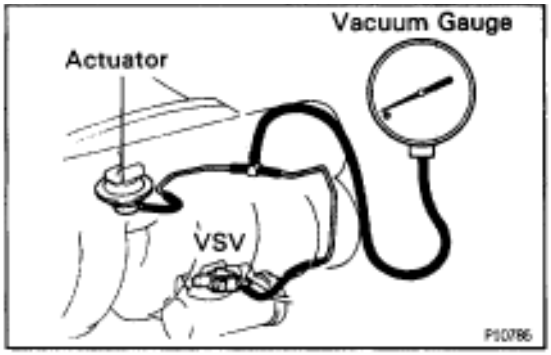

ACOUSTIC CONTROL INDUCTION SYSTEM (ACIS)
ON–VEHICLE INSPECTION

1. CONNECT VACUUM GAUGE

Using a 3–way connector, connect vacuum gauge to the vacuum hose between the actuator and VSV.

2. START ENGINE

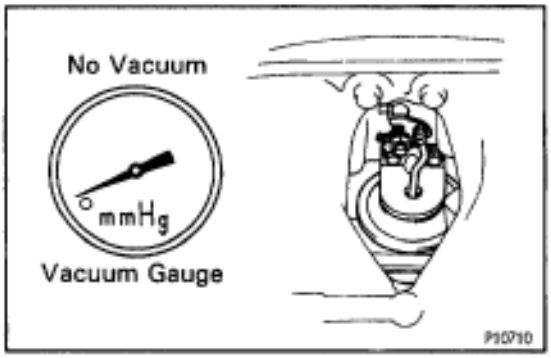

3. INSPECT ACIS

(a) While the engine is idling, check that the vacuum gauge needle does not move.

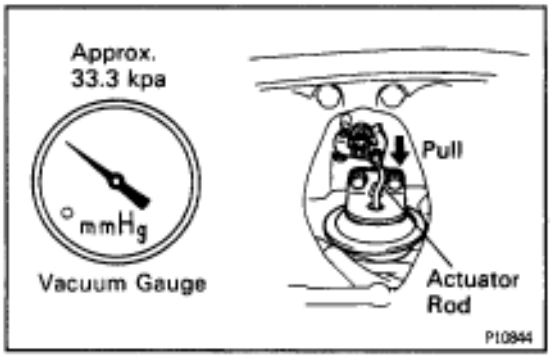

(b) Rapidly depress the accelerator pedal to fully open position and check that the vacuum gauge needle momentarily fluctuates approx. 33.3 kPa (250 mmHg, 9.84 in.Hg) or more. (The actuator rod is pulled down.) If operation is not as specified, check each part.

4. REMOVE VACUUM GAUGE

Remove the vacuum gauge, and reconnect the vacuum hose to their proper locations.

Vacuum Tank
COMPONENTS FOR REMOVAL AND INSTALLATION

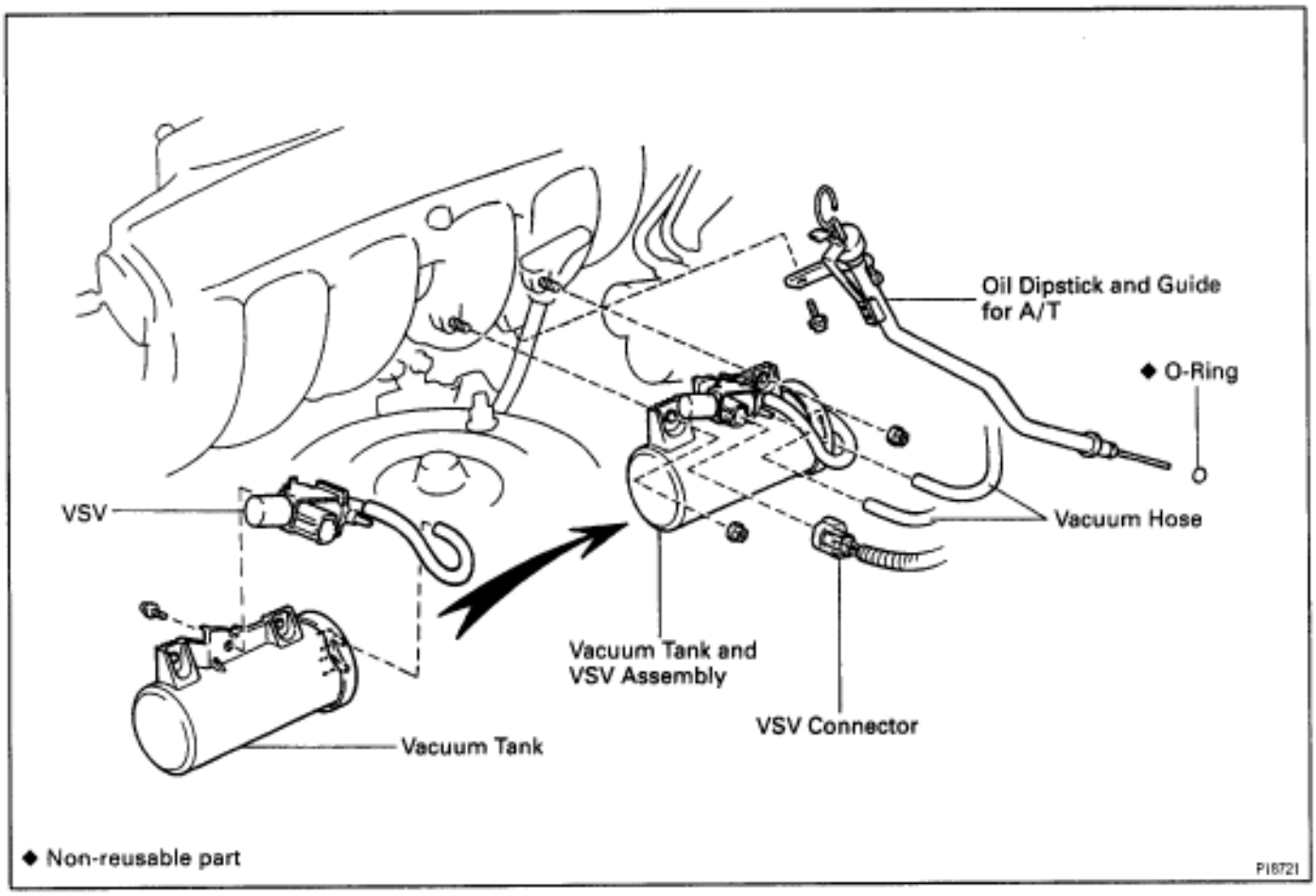

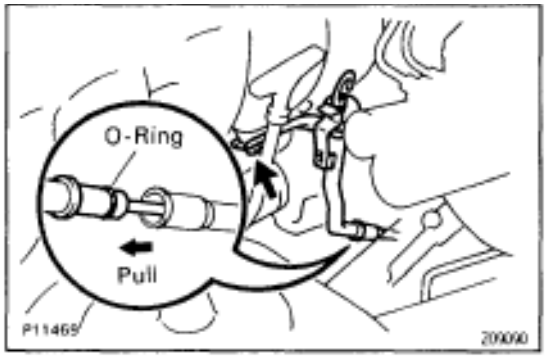

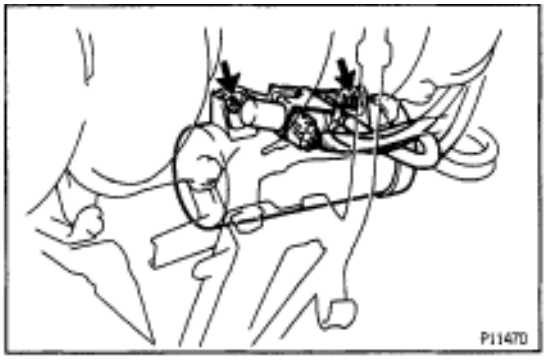

VACUUM TANK REMOVAL

Installation is in the reverse order of removal.

1. REMOVE OIL DIPSTICK AND GUIDE FOR A/T

(a) Remove the bolt.

(b) Pull out the dipstick guide together with the dipstick.
INSTALLATION HINT: Apply soapy water to the O–ring, and push in the dipstick guide.

(c) Remove the O–ring from the dipstick guide.
INSTALLATION HINT: Use a new O–ring.

2. REMOVE VACUUM TANK AND VSV ASSEMBLY

(a) Remove the 2 nuts, and disconnect the vacuum tank from the intake manifold.
Torque: 21 N·m (210 kgf·cm, 15 ft·lbf)

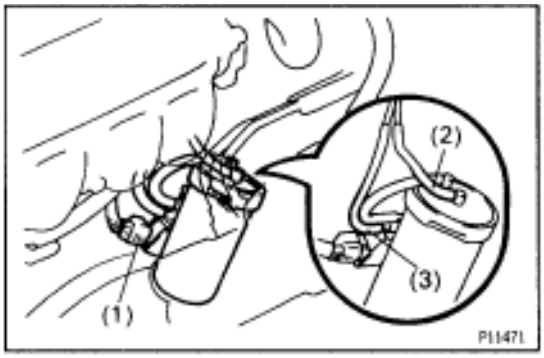

(b) Disconnect the connector and hoses, and remove the vacuum tank and VSV assembly:
(1) VSV connector
(2) Vacuum hose (from air intake chamber) from port B of vacuum tank
(3) Vacuum hose (from actuator) from VSV

3. REMOVE VSV FROM VACUUM TANK

(a) Disconnect the vacuum hose from port A of the vacuum tank.
(b) Remove the screw and VSV.

VACUUM TANK INSPECTION

INSPECT VACUUM TANK

(a) Check that air flows from port A to B.

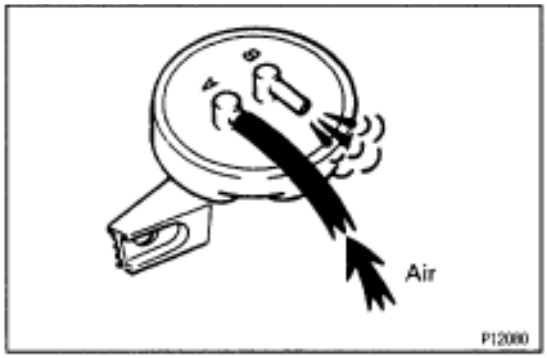

(b) Check that air does not flow from port B to A.

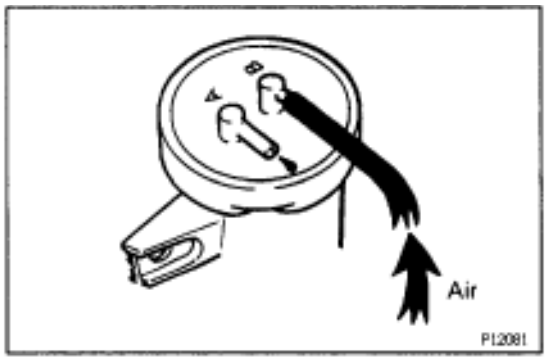

(c) Plug port B with your finger, and apply 53.3 kPa (400 mmHg, 15.75 in.Hg) of vacuum to port A, and check that there is no change in vacuum after 1 minute.
If operation is not as specified, replace the vacuum tank.

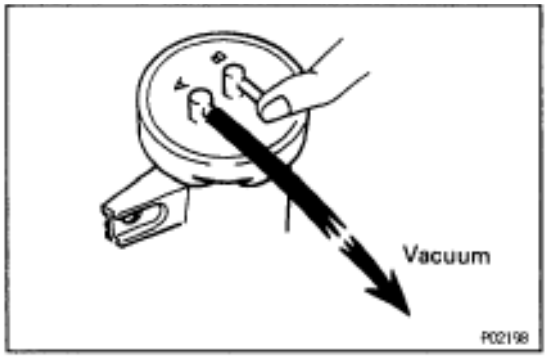

VSV INSPECTION

(See VSV for ACIS)

Intake Air Control Valve
COMPONENTS FOR REMOVAL AND INSTALLATION

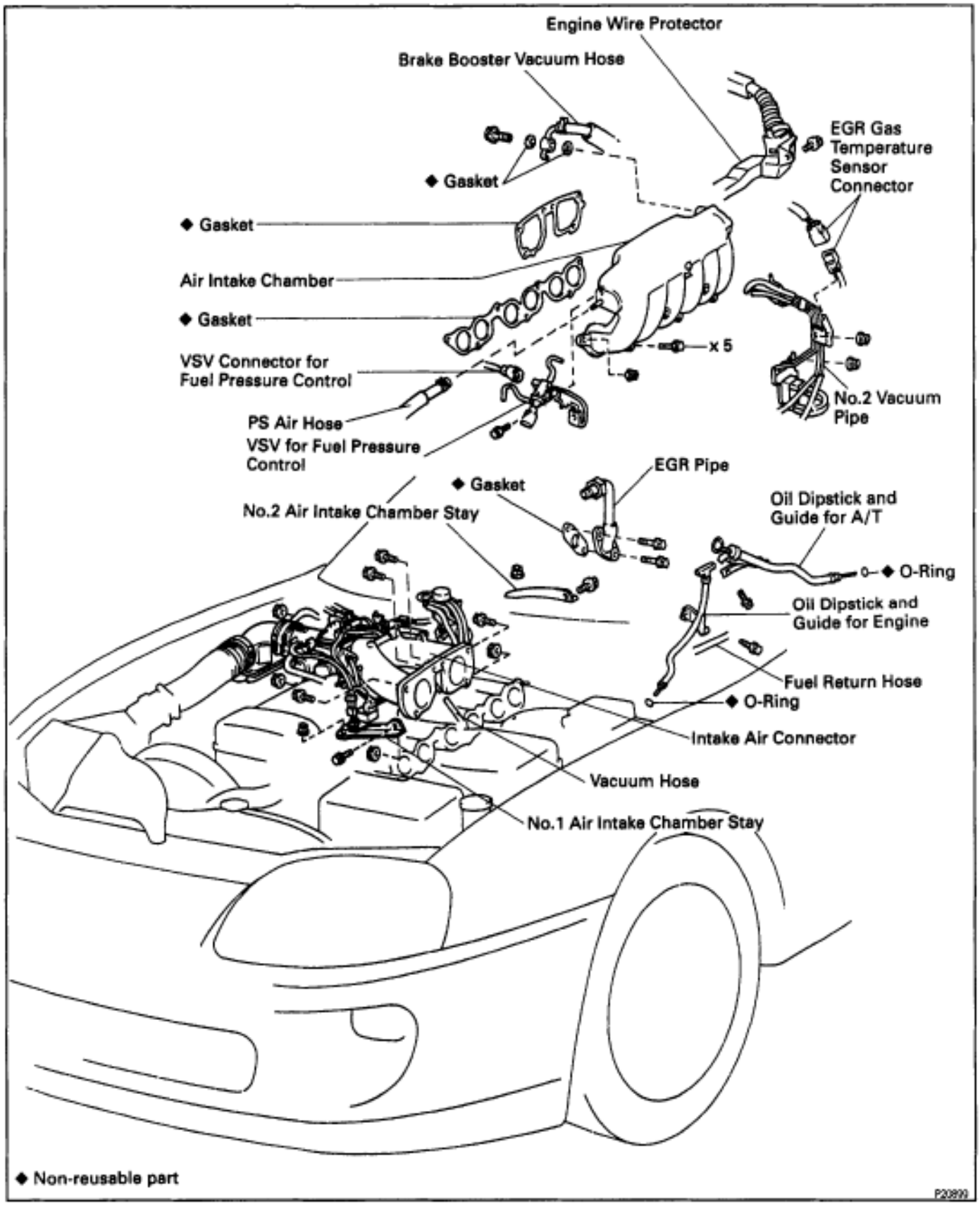

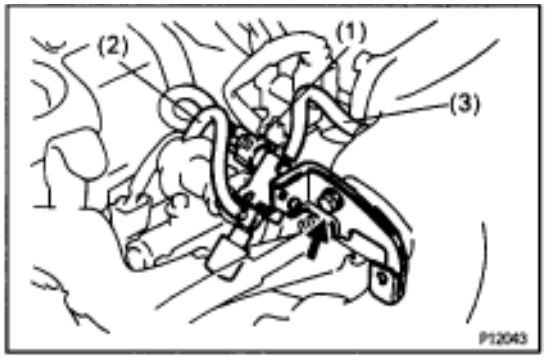

INTAKE AIR CONTROL VALVE REMOVAL

Installation is in the reverse order of removal.

1. REMOVE VSV FOR FUEL PRESSURE CONTROL

(a) Disconnect the connector and hoses:
(1) VSV connector
(2) Vacuum sensing hose from fuel pressure control
(3) Vacuum sensing hose from air intake chamber

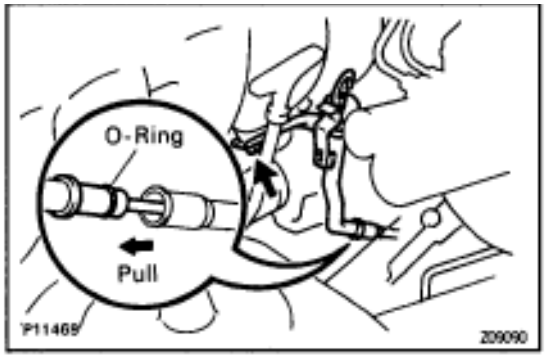

2. REMOVE OIL DIPSTICK AND GUIDE FOR A/T

(a) Remove the bolt.
(b) Pull out the dipstick guide together with the dipstick.
INSTALLATION HINT: Apply soapy water to the O–ring, and push in the dipstick guide.
(c) Remove the O–ring from the dipstick guide.
INSTALLATION HINT: Use a new O–ring.

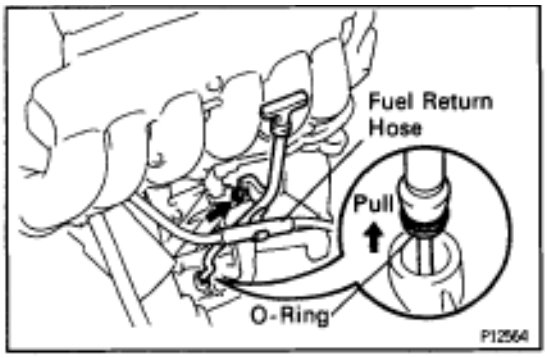

3. REMOVE OIL DIPSTICK AND GUIDE FOR ENGINE

(a) Disconnect the fuel return hose from the clamp of the dipstick guide.
(b) Remove the bolt.
(c) Pull out the dipstick guide together with the dipstick.
INSTALLATION HINT: Apply soapy water to the O–ring, and push in the dipstick guide.
(d) Remove the O–ring from the dipstick guide.
INSTALLATION HINT: Use a new O–ring.

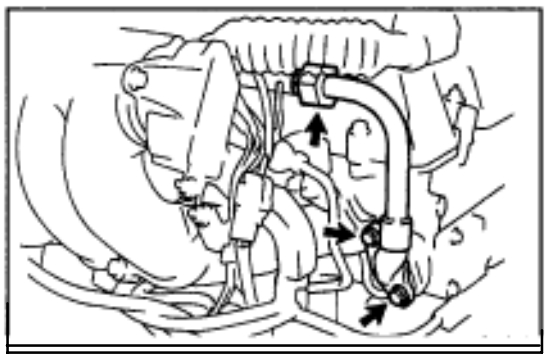

4. REMOVE EGR PIPE

(a) Loosen the union nut of the EGR pipe.
Torque: 64 N·m (650 kgf·cm, 47 ft·lbf)
(b) Remove the 2 bolts, EGR pipe and gasket.
Torque: 27 N·m (270 kgf·cm, 20 ft·lbf)

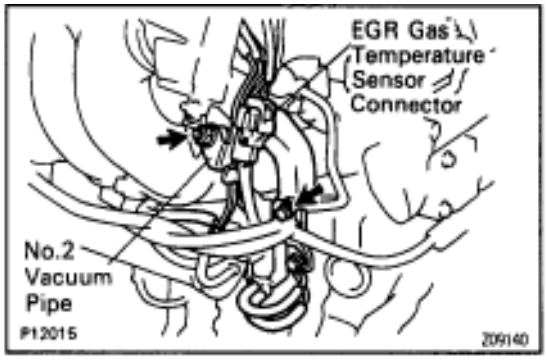

5. DISCONNECT EGR GAS TEMPERATURE SENSOR CONNECTOR

(a) Disconnect the connector from the No.2 vacuum pipe.
(b) Disconnect the sensor connector from the wiring connector.

6. DISCONNECT NO.2 VACUUM PIPE FROM AIR INTAKE CHAMBER AND INTAKE MANIFOLD

Remove the 2 nuts, and disconnect the vacuum pipe from the air intake chamber and intake manifold.
Torque: 27 N·m (270 kgf·cm, 20 ft·lbf)

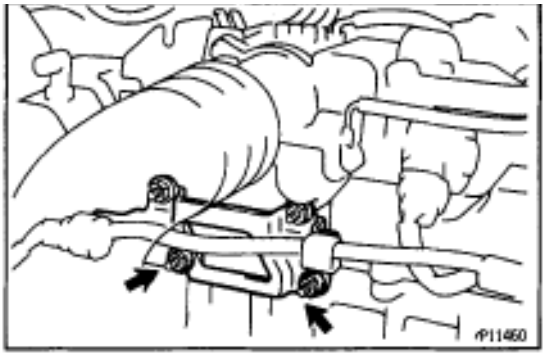

7. REMOVE AIR INTAKE CHAMBER (WITH INTAKE AIR CONTROL VALVE)

(a) Remove the 2 nuts holding the throttle body bracket to the cylinder head.
Torque: 21 N·m (210 kgf·cm, 15 ft·lbf)

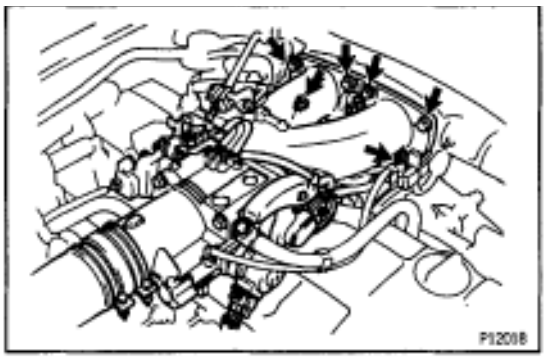

(b) Remove the 4 bolts and 2 nuts holding the intake air connector to the air intake chamber.
Torque: 27 N·m (270 kgf·cm, 20 ft·lbf)

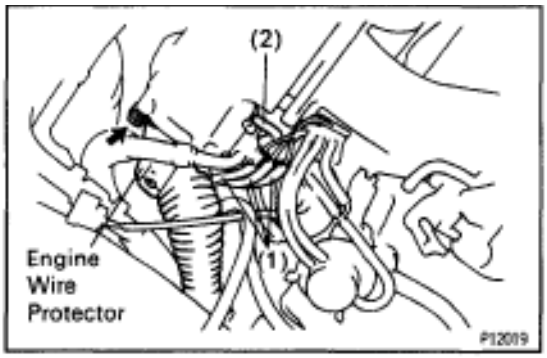

(c) Remove the bolt, and disconnect the engine wire protector from the air intake chamber.
(d) Disconnect these hoses:
(1) 3 vacuum hoses (from No.2 vacuum pipe) from No.1 vacuum pipe
(2) Vacuum hose (from No.2 vacuum pipe) from air intake chamber

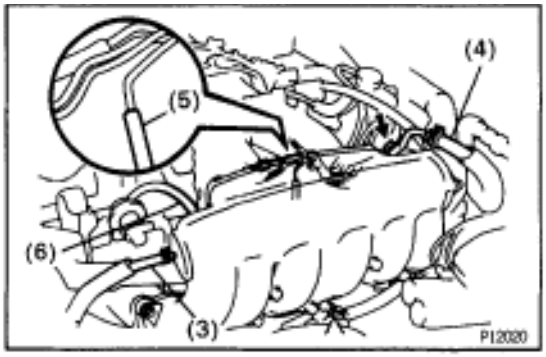

(3) PS air hose from air intake chamber
(4) Brake booster vacuum hose from air intake chamber
Remove the union bolt and 2 gaskets, and disconnect the vacuum hose.
Torque: 29 N·m (300 kgf·cm, 22 ft·lbf)
(5) Vacuum hose (from actuator for ACIS) from No.1 vacuum pipe
(6) Except California:
Vacuum sensing hose (from fuel pressure regulator) from air intake chamber

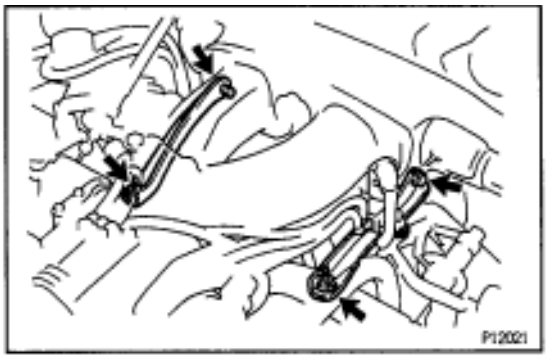

(e) Loosen the 2 nuts holding the air intake chamber stays to the cylinder head.
Torque: 18 N·m (185 kgf·cm, 13 ft·lbf)
(f) Remove the 2 bolts, and disconnect the 2 air intake chamber stays from the air intake chamber.
Torque: 18 N·m (185 kgf·cm, 13 ft·lbf)

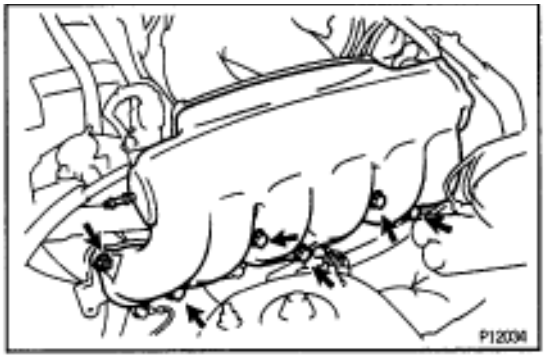

(g) Remove the 5 bolts, nut, air intake chamber and 2 gaskets.
Torque: 27 N·m (270 kgf·cm, 20 ft·lbf)

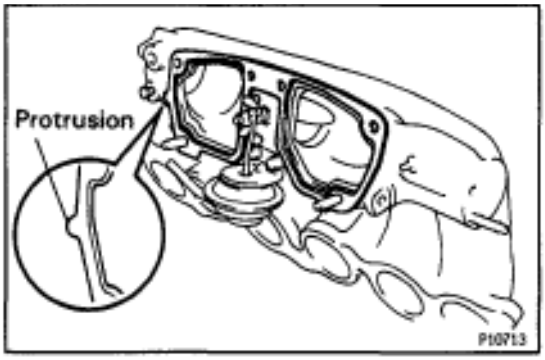

INSTALLATION HINT: Install a new gasket to the air intake chamber, facing the protrusion rearward.

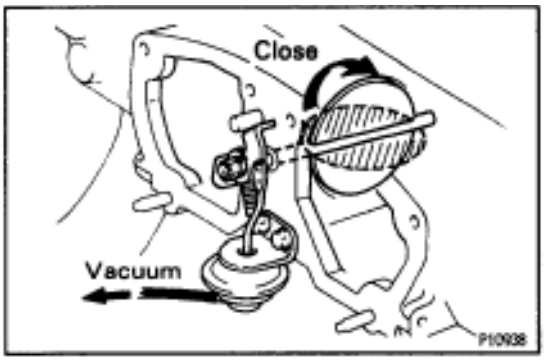

INTAKE AIR CONTROL VALVE INSPECTION

INSPECT INTAKE AIR CONTROL VALVE

(a) With 53.3 kPa (400 mmHg, 15.75 in.Hg) of vacuum applied to the actuator, check that the actuator rod moves.

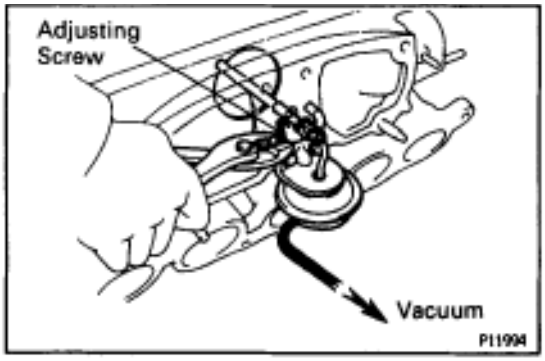

If operation is not as specified, turn the adjusting screw.

(b) 1 minute after applying the vacuum in (a), check that the actuator rod does not return.

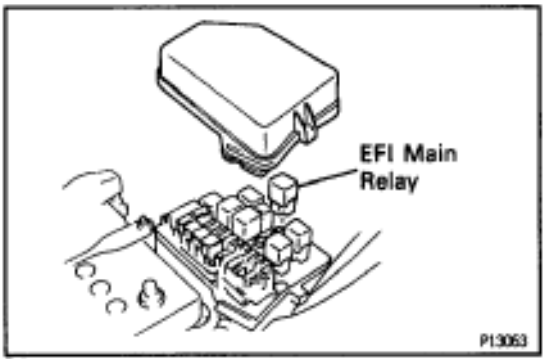

EFI MAIN RELAY
EFI MAIN RELAY INSPECTION

1. REMOVE EFI MAIN RELAY

LOCATION: In the engine compartment relay box.

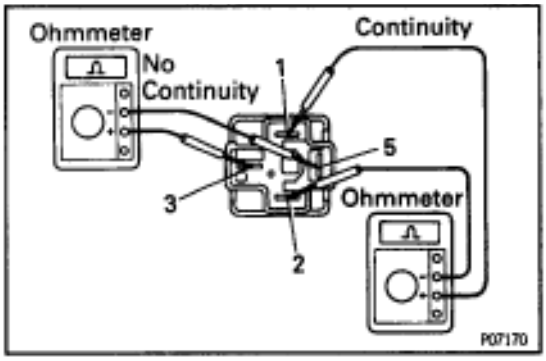

2. INSPECT EFI MAIN RELAY

A. Inspect relay continuity

(a) Using an ohmmeter, check that there is continuity between terminals 1 and 2.

(b) Check that there is no continuity between terminals 3 and 5.

If continuity is not as specified, replace the relay.

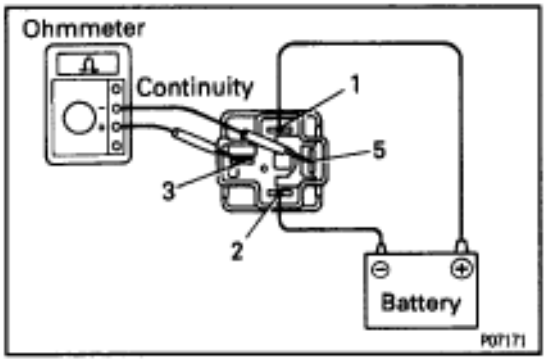

B. Inspect relay operation

(a) Apply battery voltage across terminals 1 and 2.

(b) Using an ohmmeter, check that there is continuity between terminals 3 and 5.

If operation is not as specified, replace the relay.

3. REINSTALL EFI MAIN RELAY

VSV FOR ACIS
COMPONENTS FOR REMOVAL AND INSTALLATION

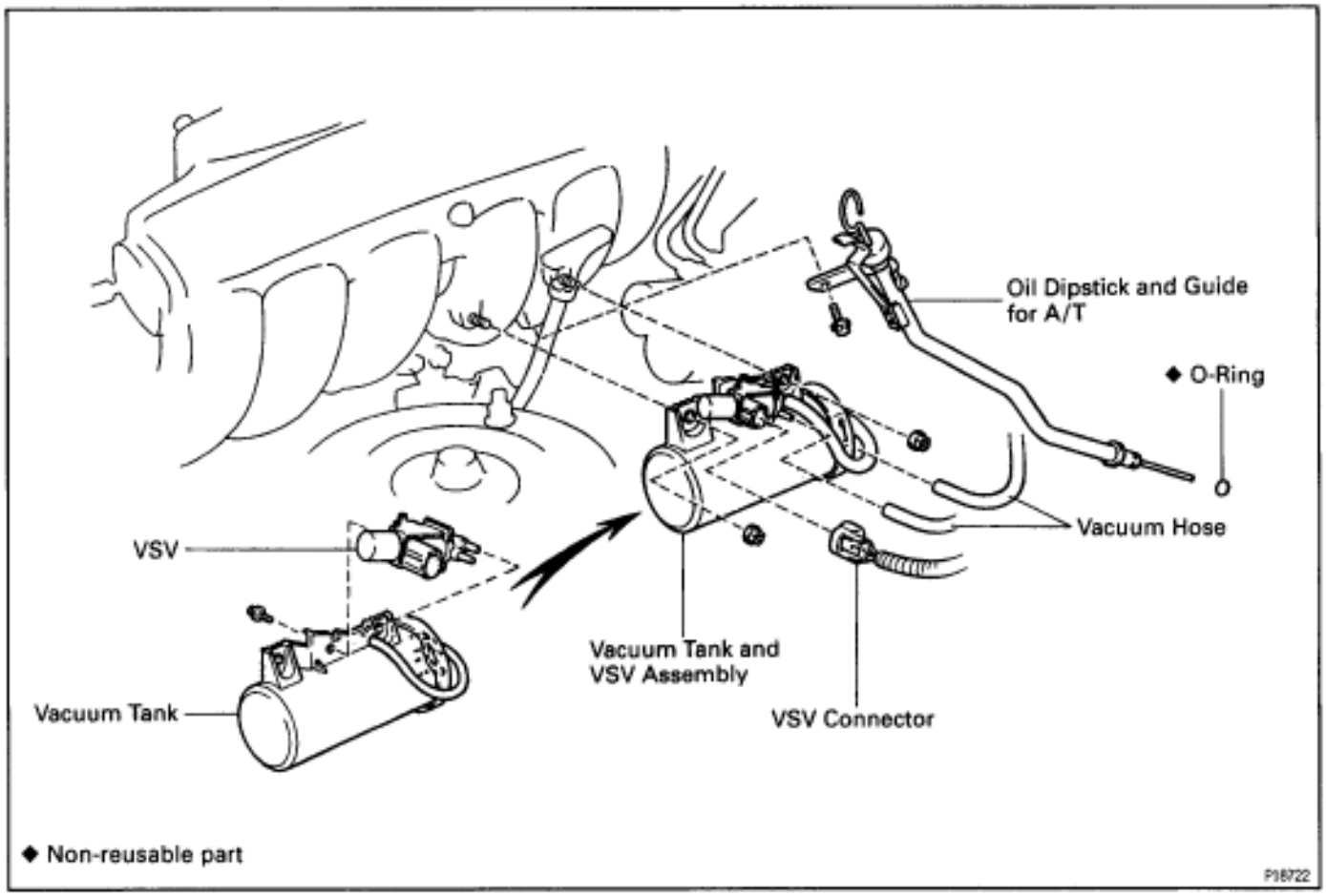

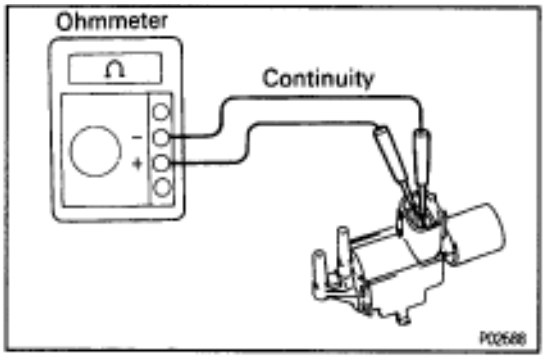

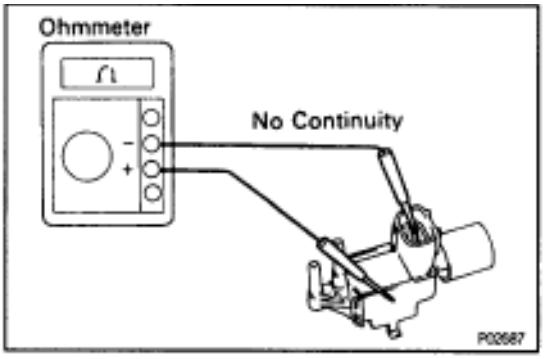

VSV INSPECTION

1. **REMOVE VSV**
2. **INSPECT VSV**

A. Inspect VSV for open circuit

Using an ohmmeter, check that there is continuity between the terminals.

Resistance:

At 20°C (68°F) 38.5–44.5 Ω

If there is no continuity, replace the VSV.

B. Inspect VSV for ground

Using an ohmmeter, check that there is no continuity between each terminal and the body.

If there is continuity, replace the VSV.

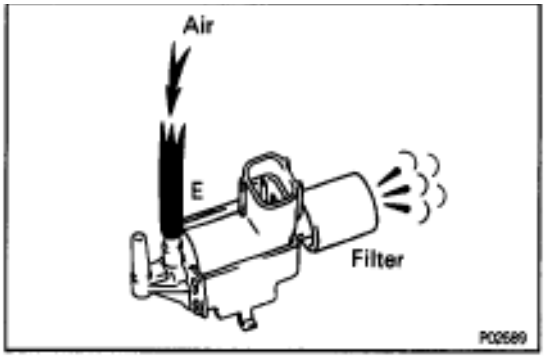

C. Inspect VSV operation

(a) Check that air flows from port E to the filter.

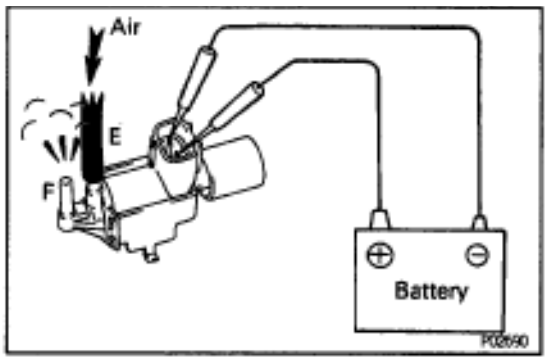

(b) Apply battery voltage across the terminals.

(c) Check that air flows from port E to F.

If operation is not as specified, replace the VSV.

3. REINSTALL VSV

VSV FOR FUEL PRESSURE CONTROL (California only)
COMPONENTS FOR REMOVAL AND INSTALLATION

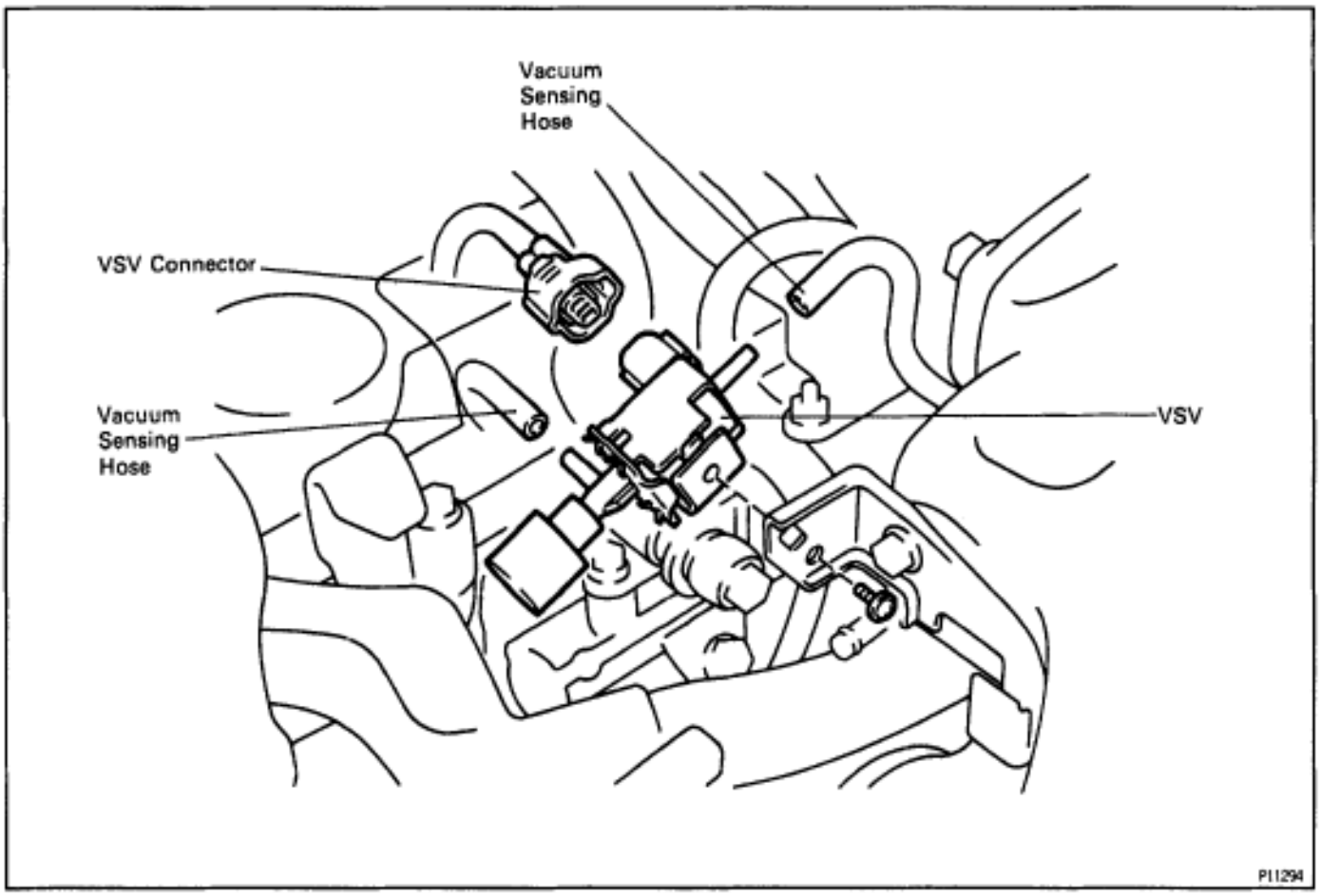

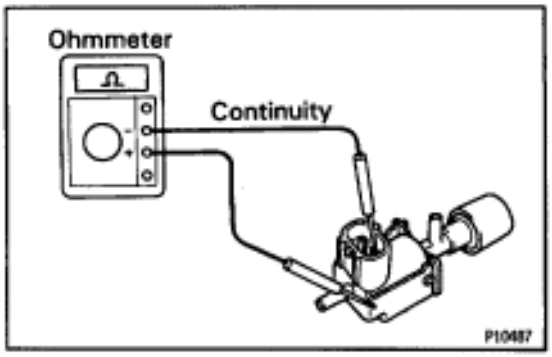

VSV INSPECTION

1. REMOVE VSV

2. INSPECT VSV

A. Inspect VSV for open circuit

Using an ohmmeter, check that there is continuity between the terminals.

Resistance:

At 20°C (68°F) 33–39 Ω

If there is no continuity, replace the VSV.

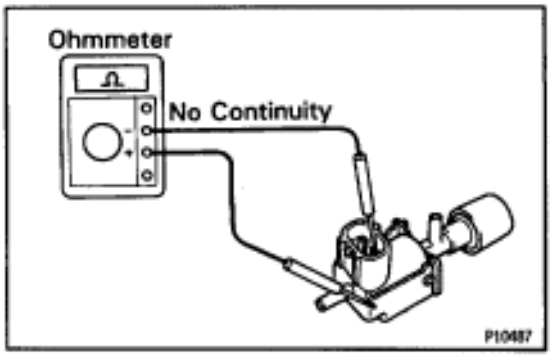

B. Inspect VSV for ground

Using an ohmmeter, check that there is no continuity between each terminal and the body.

If there is continuity, replace the VSV.

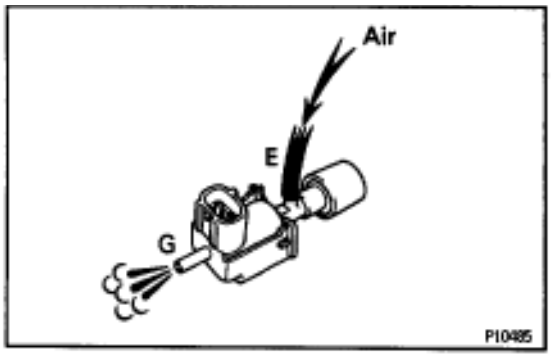

C. Inspect VSV operation

(a) Check that air flows from port E to G.

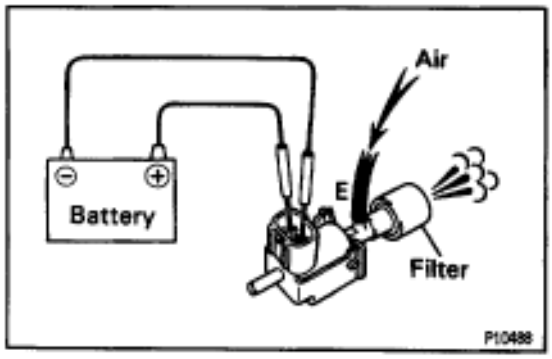

(b) Apply battery voltage across the terminals.

(c) Check that air flows from port E to the filter.

If operation is not as specified, replace the VSV.

3. REINSTALL VSV

VSV FOR EVAP
COMPONENTS FOR REMOVAL AND INSTALLATION

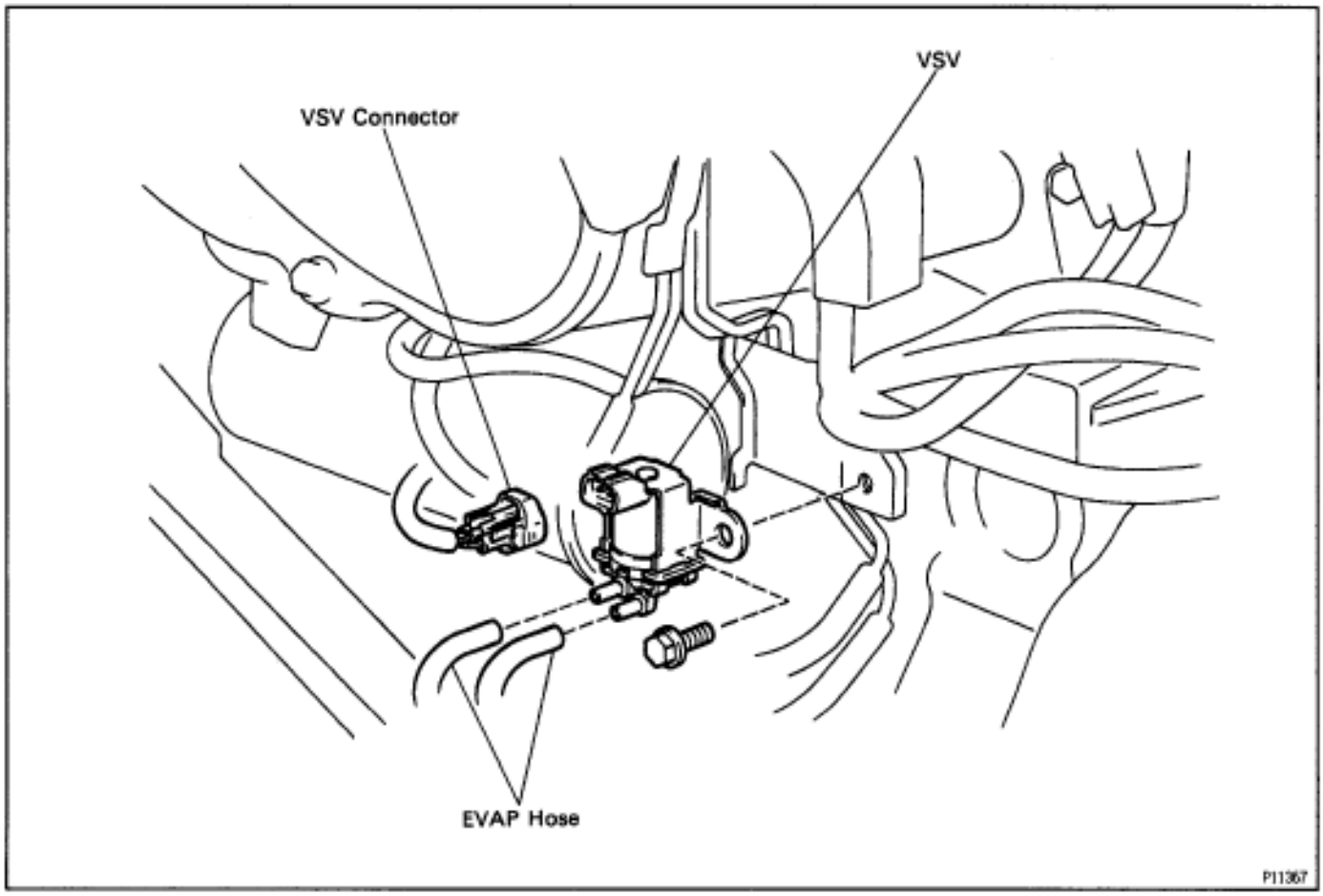

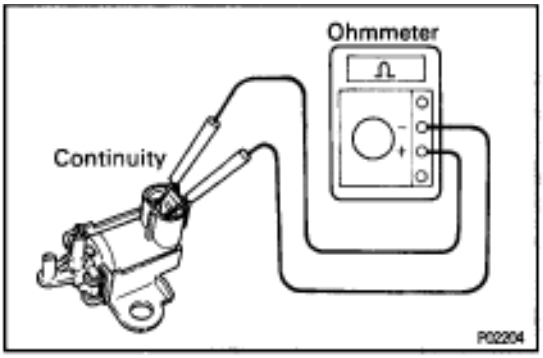

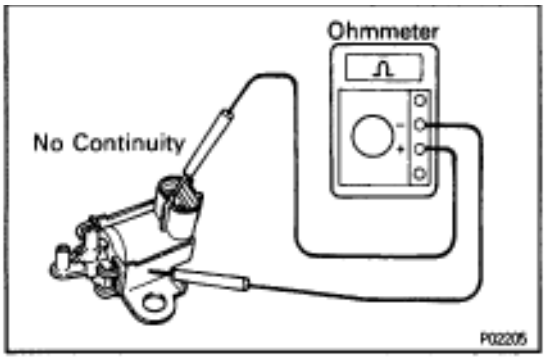

VSV INSPECTION

1. **REMOVE VSV**
2. **INSPECT VSV**

A. Inspect VSV for open circuit

Using an ohmmeter, check that there is continuity between the terminals.

Resistance:

At 20°C (68°F) 27–33 Ω

If there is no continuity, replace the VSV.

B. Inspect VSV for ground

Using an ohmmeter, check that there is no continuity between each terminal and the body.

If there is continuity, replace the VSV.

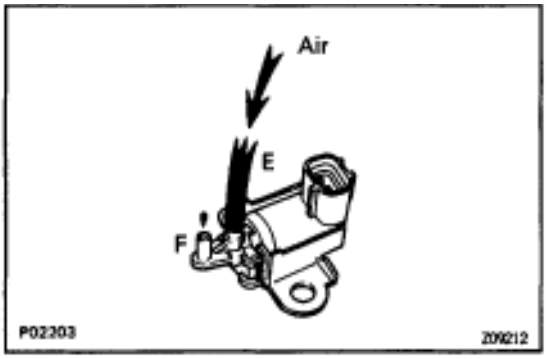

C. Inspect VSV operation

(a) Check that air does not flow from port E to F.

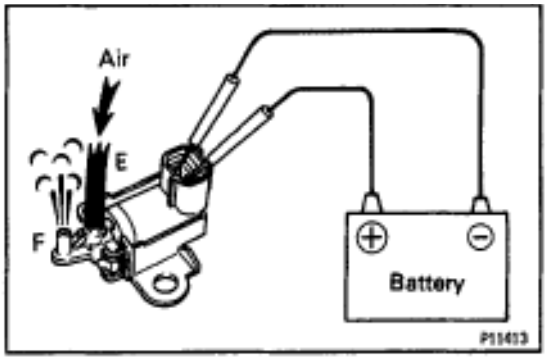

(b) Apply battery voltage across the terminals.

(c) Check that air flows from port E to F.

If operation is not as specified, replace the VSV.

3. REINSTALL VSV

VSV FOR EGR COMPONENTS FOR REMOVAL AND INSTALLATION

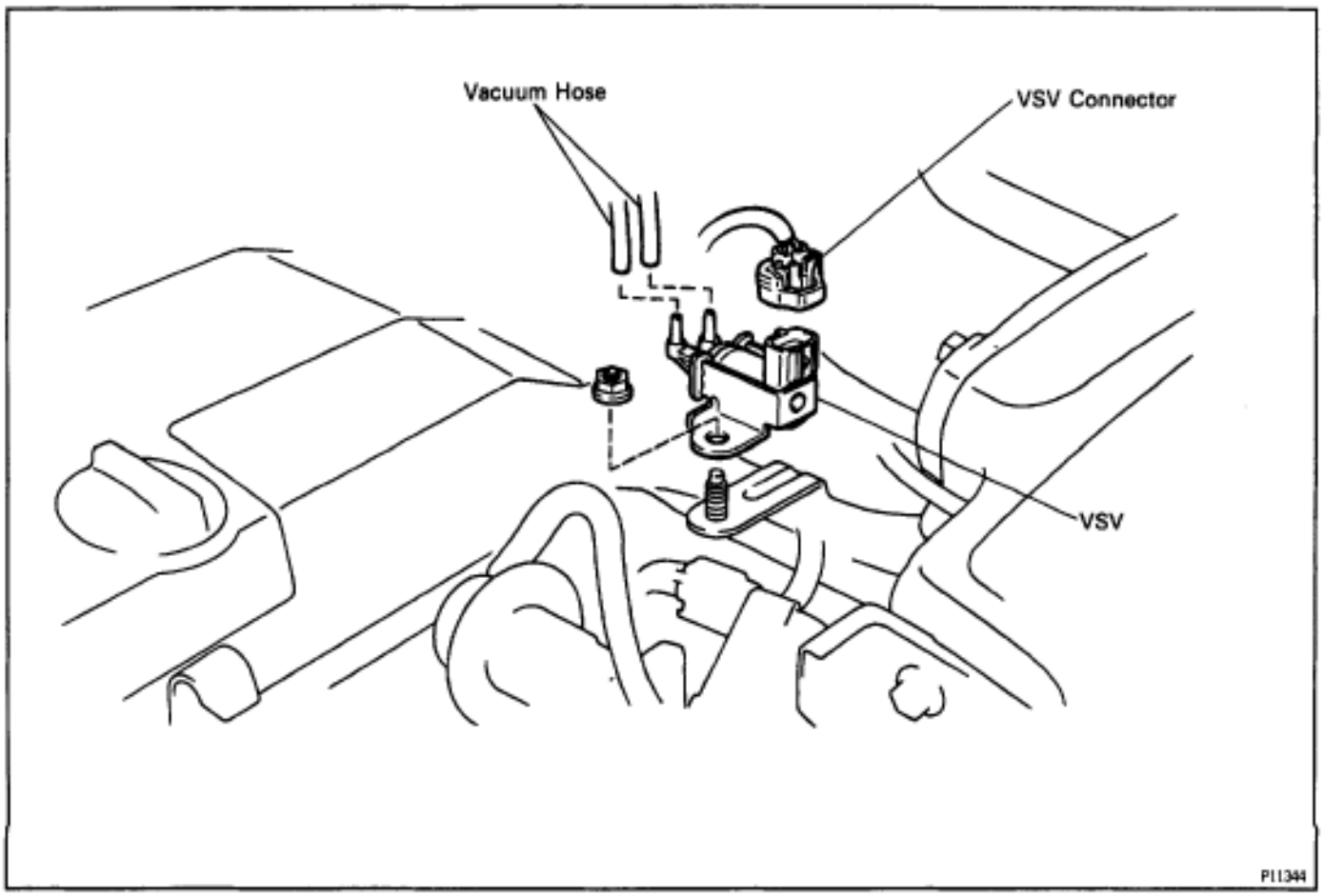

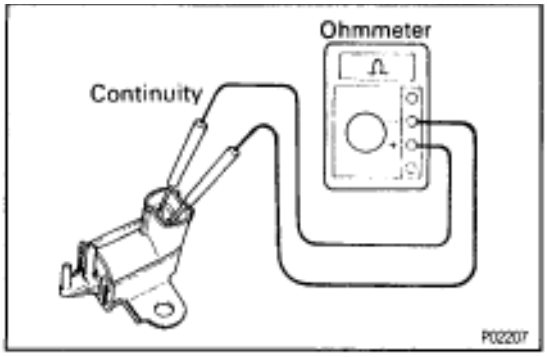

VSV INSPECTION

1. REMOVE VSV

2. INSPECT VSV

A. Inspect VSV for open circuit

Using an ohmmeter, check that there is continuity between the terminals.

Resistance:

At 20˚C (68˚F) 38.5–44.5 Ω

If there is no continuity, replace the VSV.

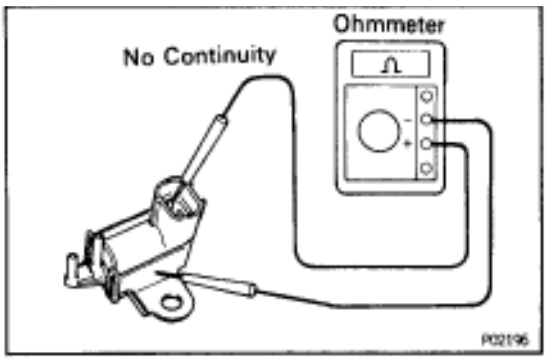

B. Inspect VSV for ground

Using an ohmmeter, check that there is no continuity between each terminal and the body.

If there is continuity, replace the VSV.

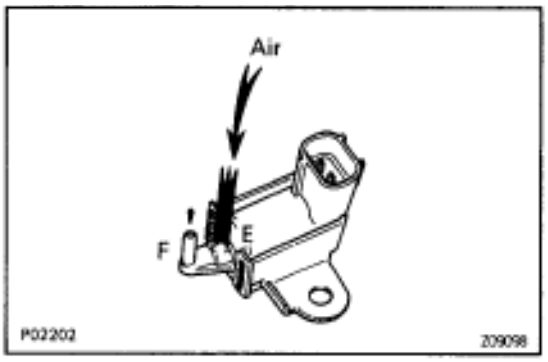

C. Inspect VSV operation

(a) Check that air does not flow from port E to F.

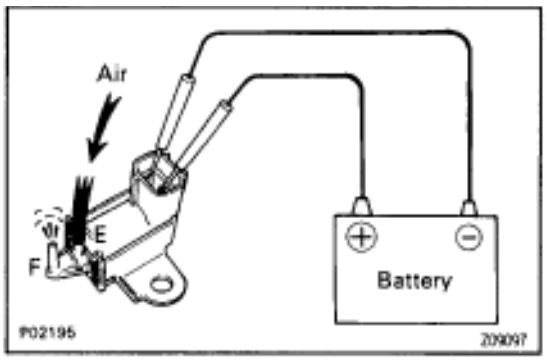

(b) Apply battery voltage across the terminals.

(c) Check that air flows from port E to F.

If operation is not as specified, replace the VSV.

3. REINSTALL VSV

ENGINE COOLANT TEMPERATURE (ECT) SENSOR
COMPONENTS FOR REMOVAL AND INSTALLATION

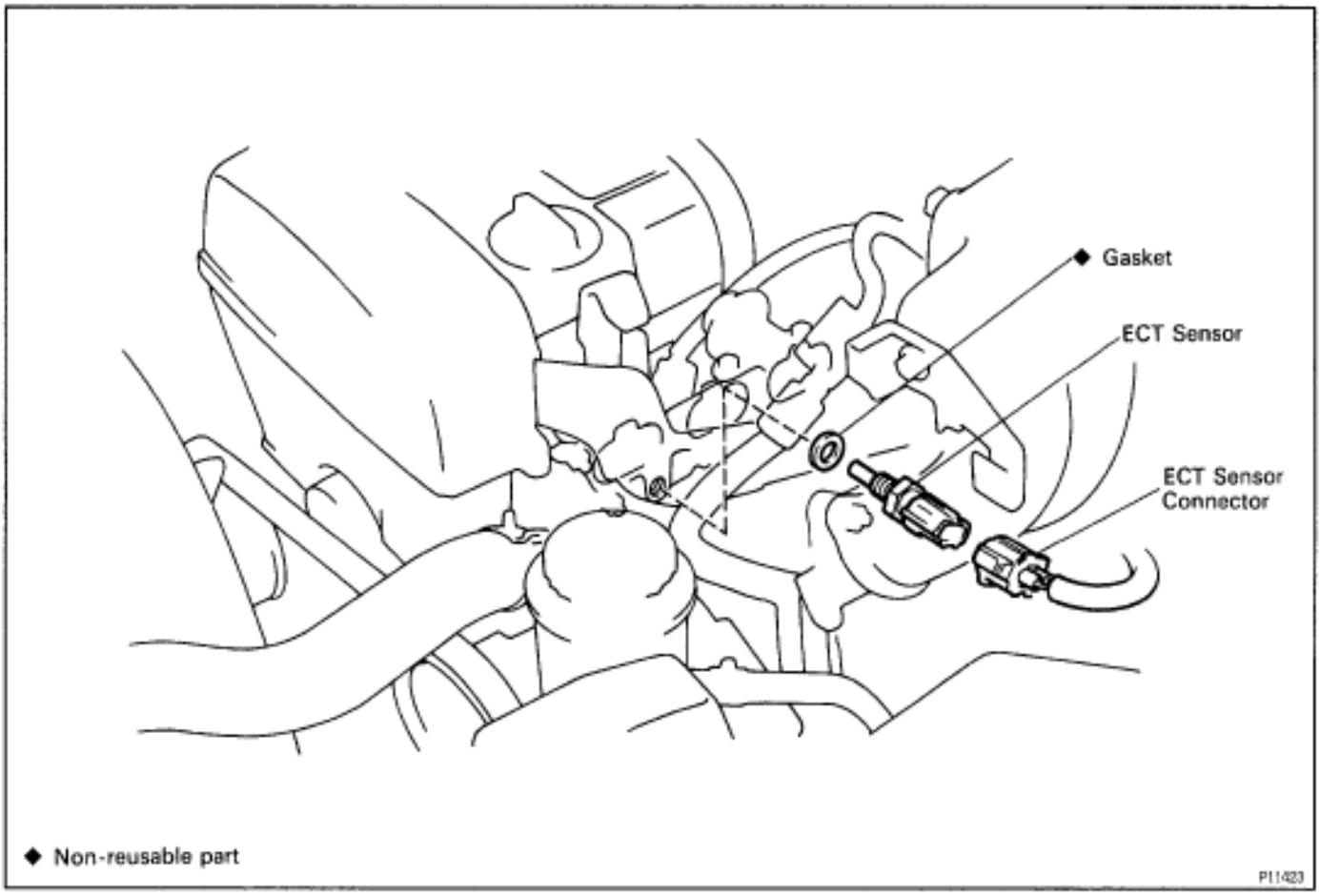

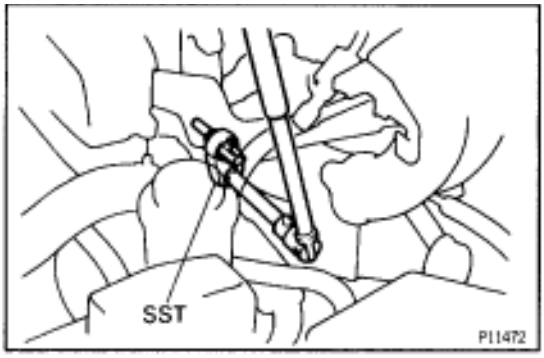

ECT SENSOR INSPECTION

1. DRAIN ENGINE COOLANT

2. REMOVE ECT SENSOR

(a) Disconnect the ECT sensor connector.

(b) Using SST, remove the ECT sensor and gasket.
SST 09205–76030

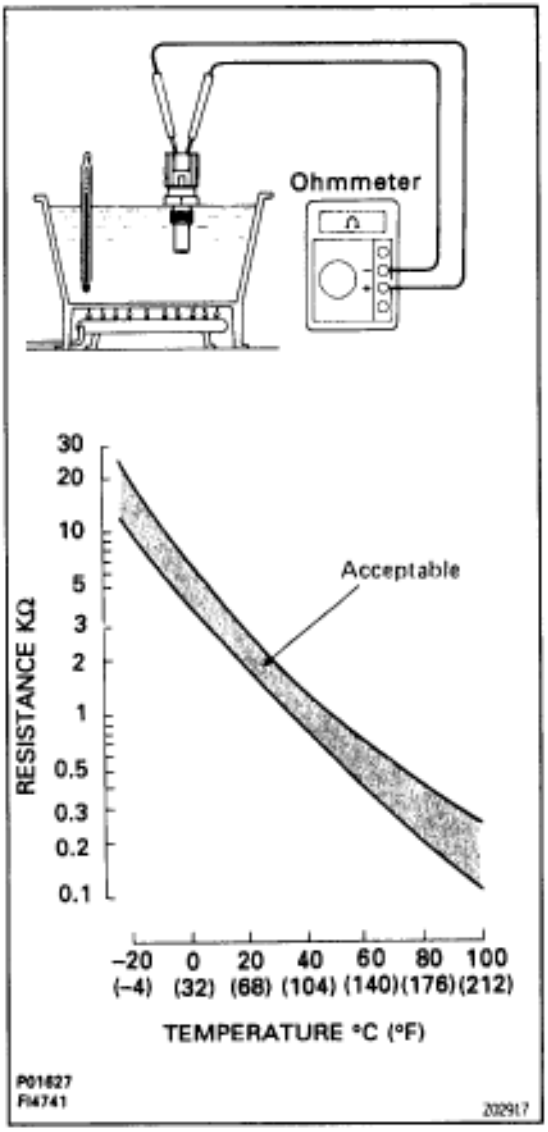

3. INSPECT ECT SENSOR

Using an ohmmeter, measure the resistance between the terminals.

Resistance:

Refer to the graph

If the resistance is not as specified, replace the ECT sensor.

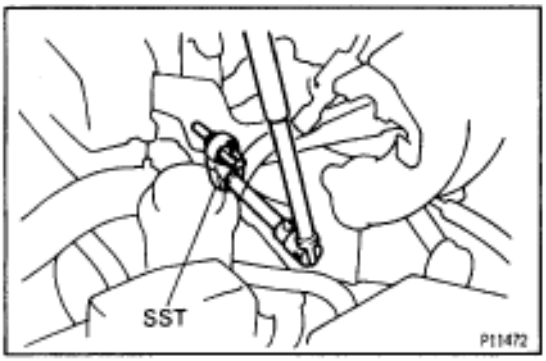

4. REINSTALL ECT SENSOR

(a) Install a new gasket to the ECT sensor.

(b) Using SST, install the ECT sensor.
SST 09205–76030

(c) Connect the ECT sensor connector.

5. REFILL WITH ENGINE COOLANT

EGR GAS TEMPERATURE SENSOR COMPONENTS FOR REMOVAL AND INSTALLATION

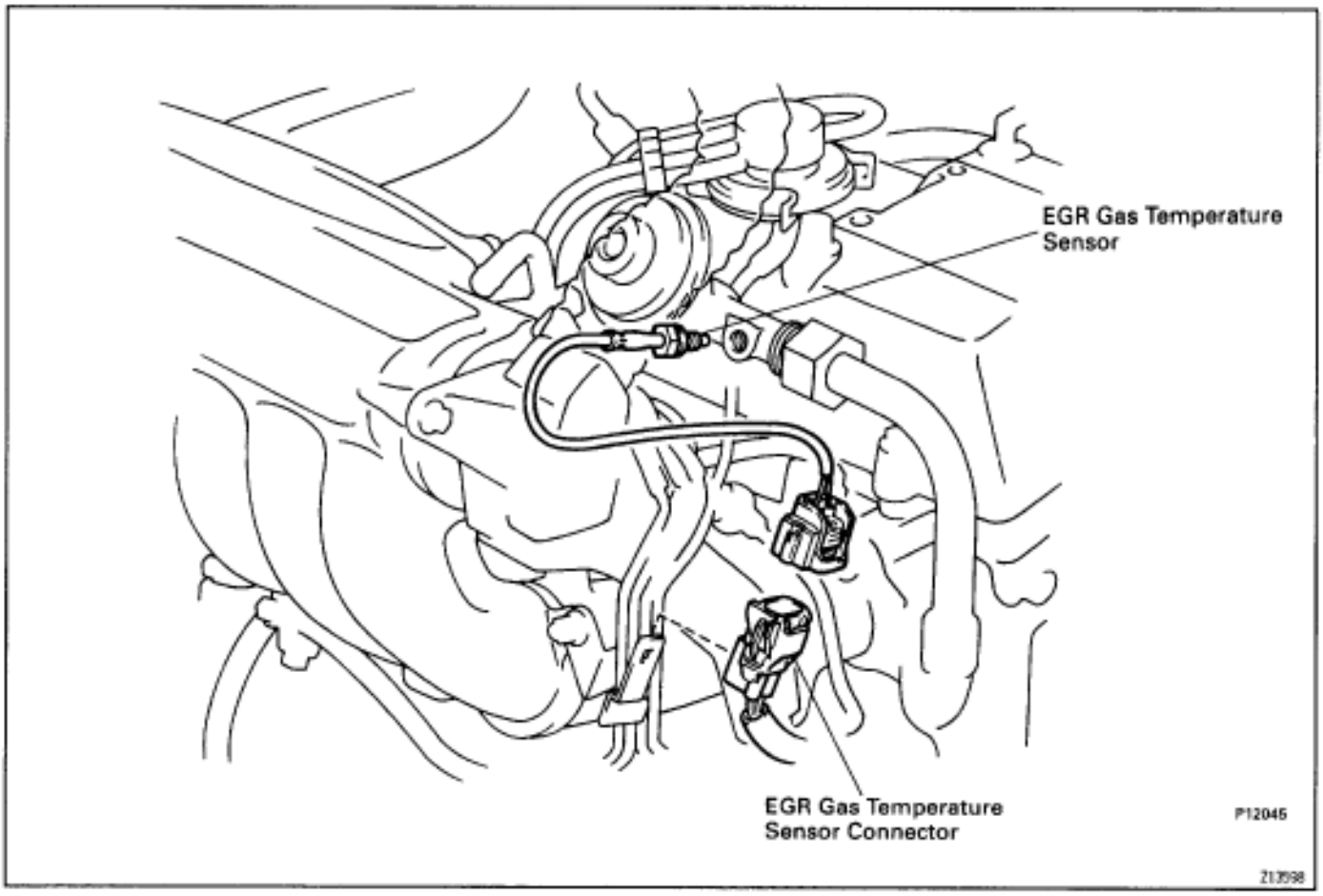

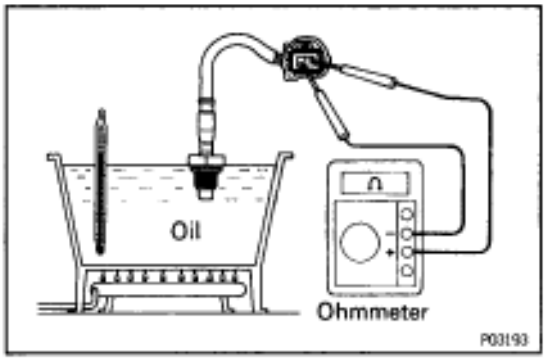

EGR GAS TEMPERATURE SENSOR INSPECTION

1. **REMOVE EGR GAS TEMPERATURE SENSOR**
2. **INSPECT EGR GAS TEMPERATURE SENSOR**

   Using an ohmmeter, measure the resistance between the terminals.

   Resistance:

   At 50°C (112°F)

   64–97 kΩ

   At 100°C (212°F)

   11–16 kΩ

   At 150°C (302°F)

   2–4 kΩ

   If the resistance is not as specified, replace the sensor.

   Torque: 20 N·m (200 kgf·cm, 14 ft·lbf)
3. **REINSTALL EGR GAS TEMPERATURE SENSOR**

KNOCK SENSOR
COMPONENTS FOR REMOVAL AND INSTALLATION

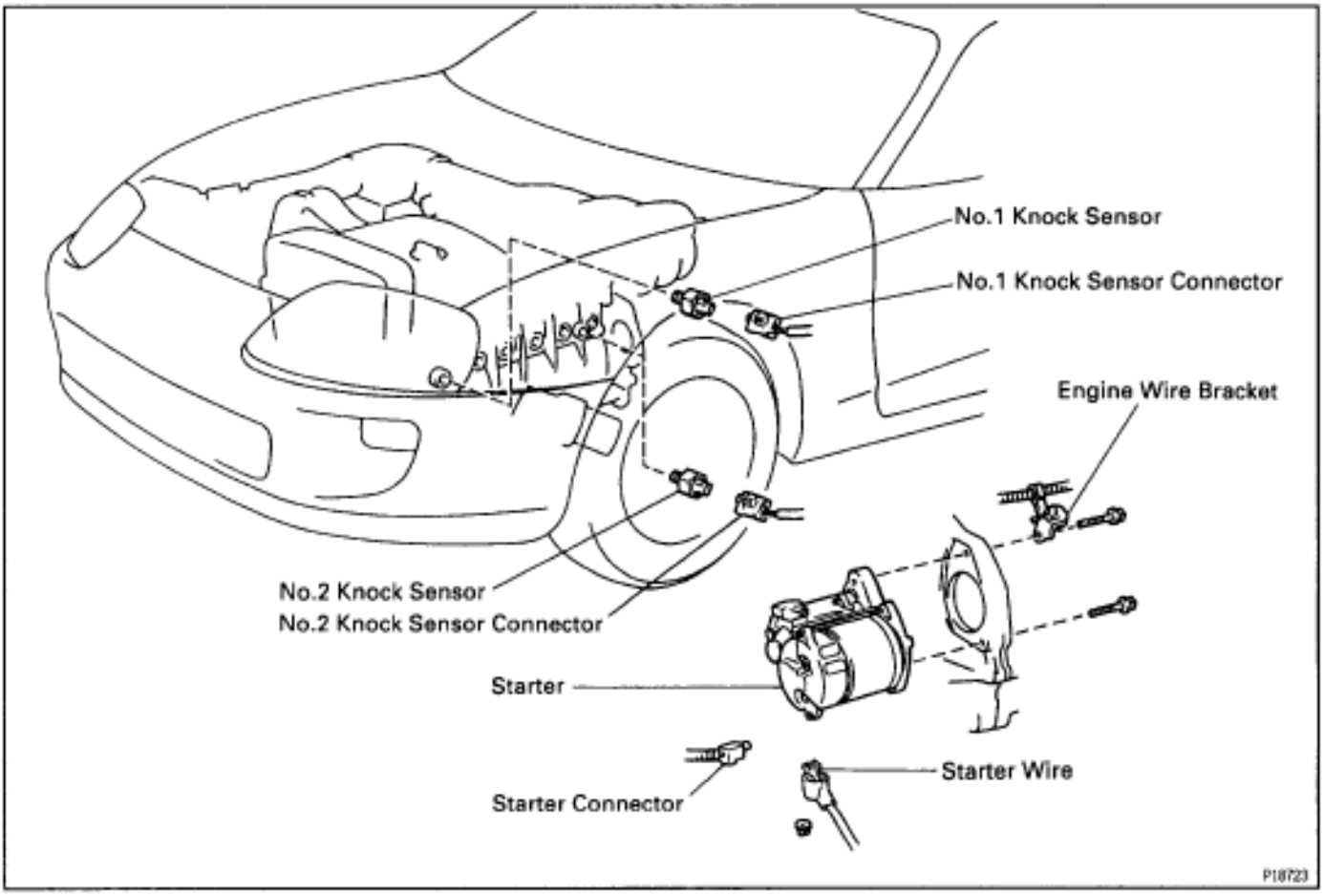

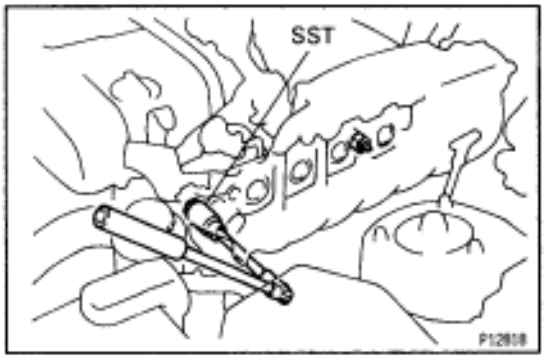

KNOCK SENSORS INSPECTION

1. REMOVE STARTER
(See starter removal in Starting System)

2. REMOVE KNOCK SENSORS

(a) Disconnect the knock sensor connector.

(b) Using SST, remove the knock sensor.
SST 09816–30010

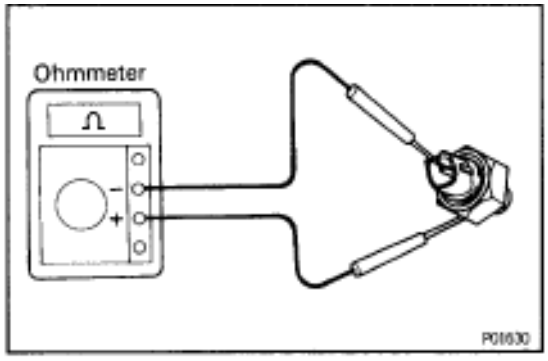

3. INSPECT KNOCK SENSORS

Using an ohmmeter, check that there is no continuity between the terminal and body.
If there is continuity, replace the sensor.

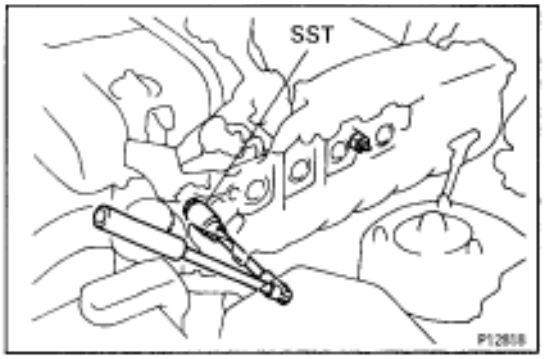

4. REINSTALL KNOCK SENSORS

(a) Using SST, install the knock sensor.
SST 09816–30010
Torque: 44 N·m (450 kgf·cm, 33 ft·lbf)

(b) Connect the knock sensor connector.

5. REINSTALL STARTER
(See starter installation in Starting System)

OXYGEN SENSOR
Main Heated Oxygen Sensors (California) or Oxygen Sensors (Except California)

COMPONENTS FOR REMOVAL AND INSTALLATION

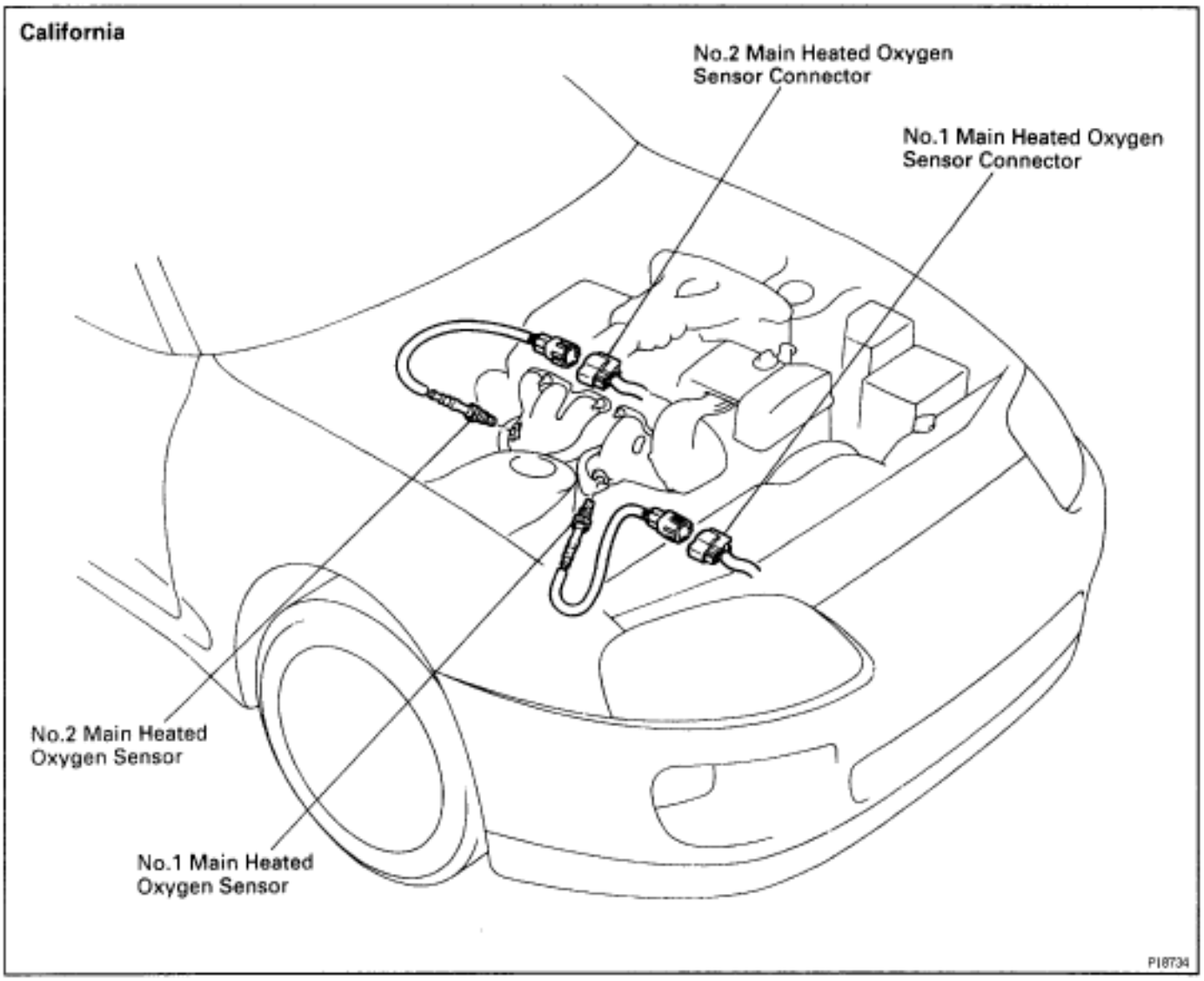

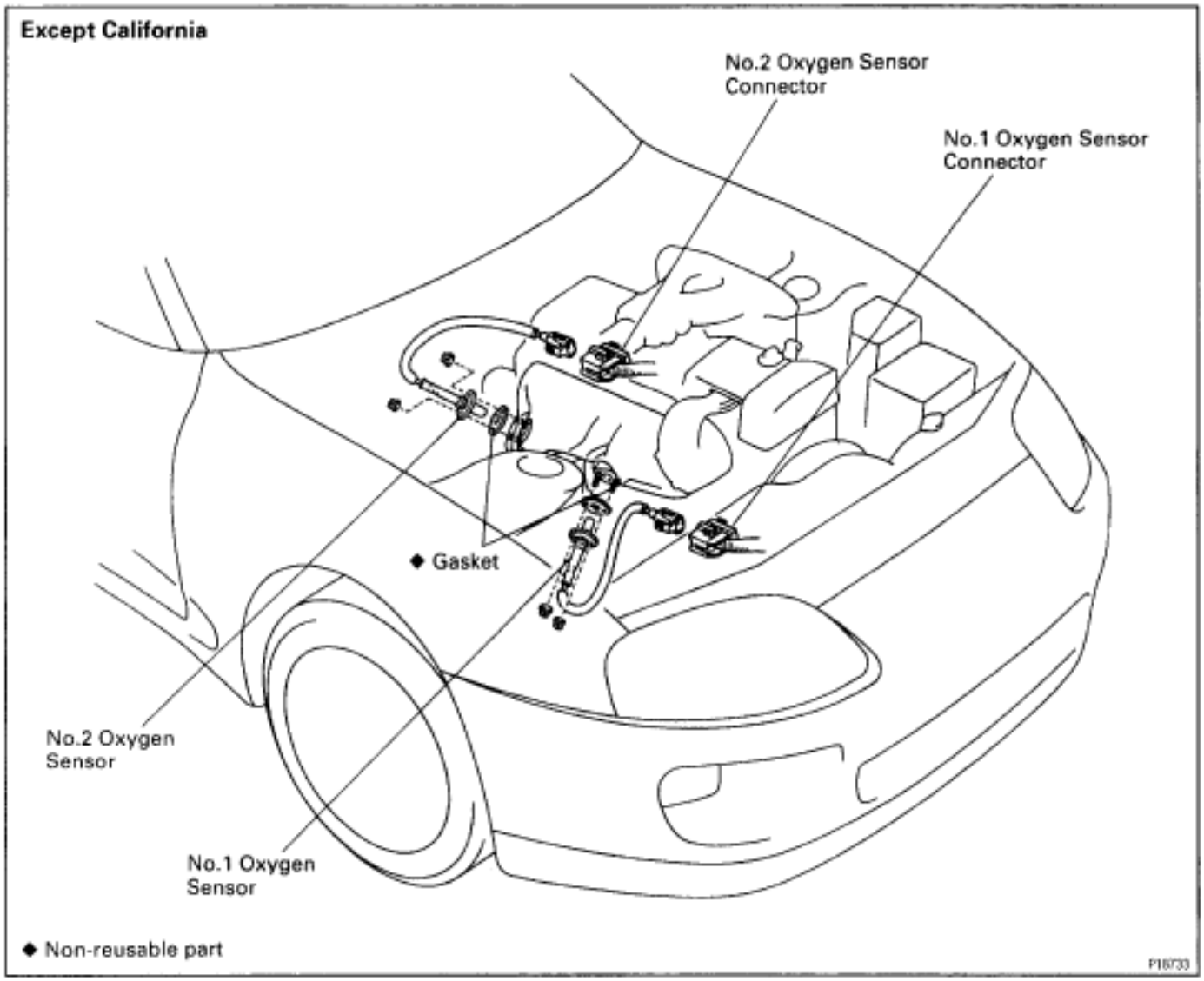

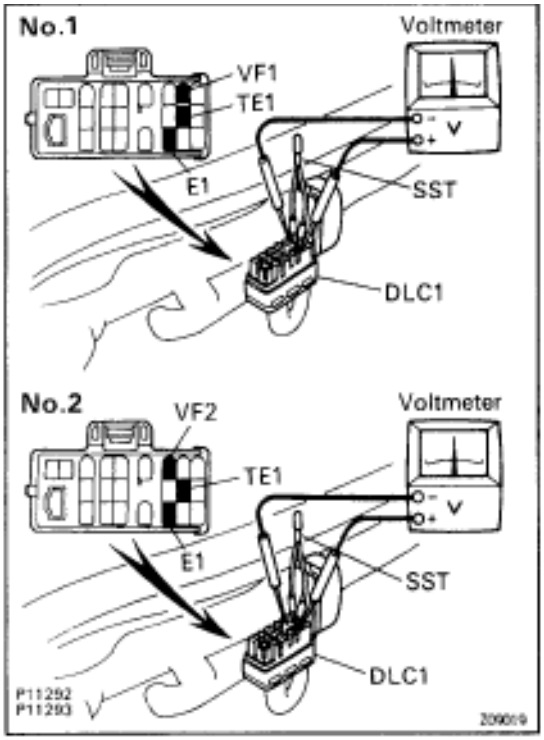

OXYGEN SENSORS INSPECTION

1. WARM UP ENGINE

Allow the engine to warm up to normal operating temperature.

2. INSPECT FEEDBACK VOLTAGE

Connect the positive (+) tester probe of a voltmeter to terminal VF1 (for No.1) or VF2 (for No.2) of the DLC 1, and negative (–) tester probe to terminal E1. Do the test as described on the next page.

HINT: Use SST when connecting between terminals TE1 and E1 of the DLC1.

SST 09843–18020

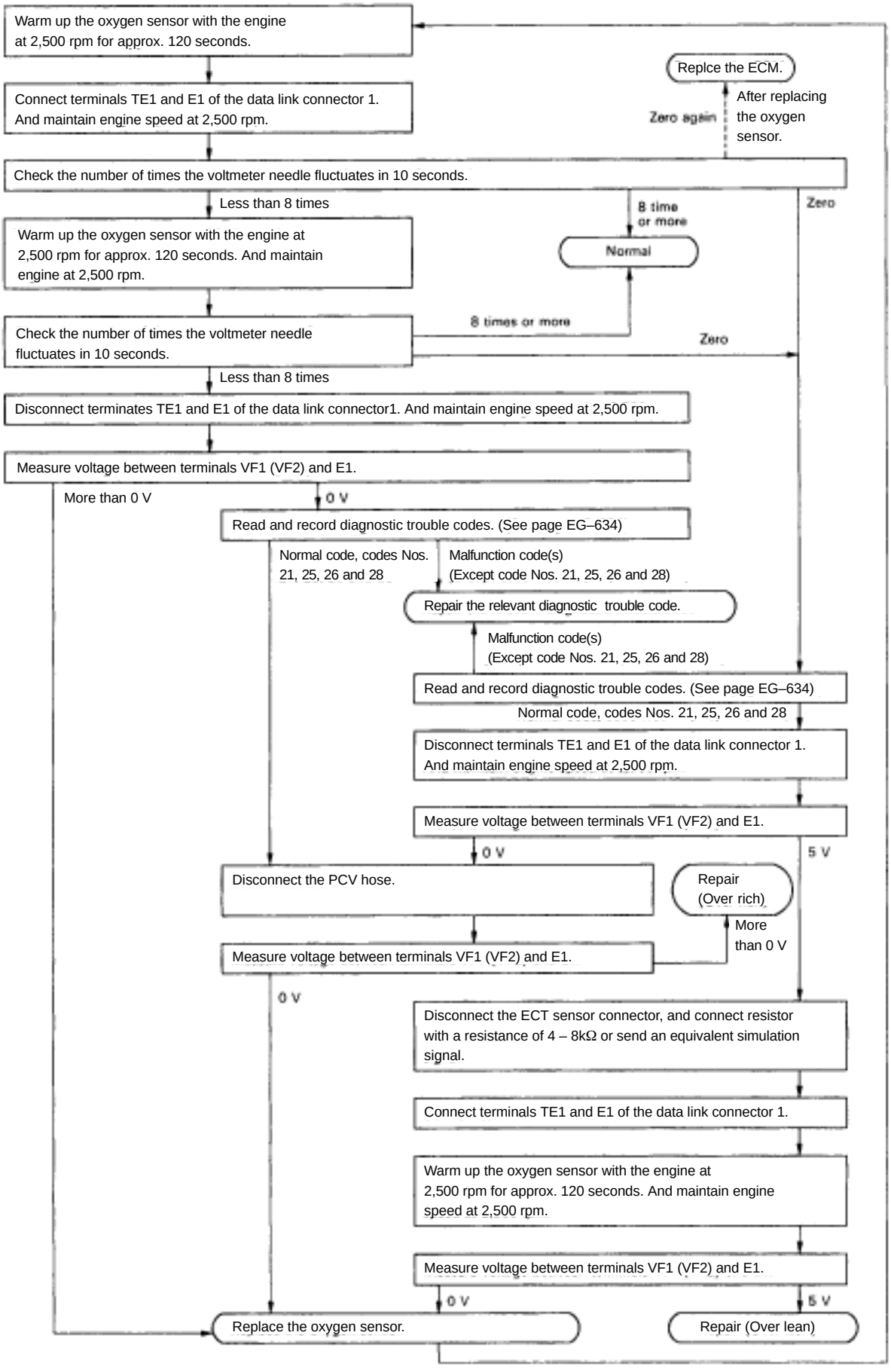
Warm up the oxygen sensor with the engine at 2,500 rpm for approx. 120 seconds.
Connect terminals TE1 and E1 of the data link connector 1. And maintain engine speed at 2,500 rpm.
Replce the ECM.
After replacing the oxygen sensor.
Zero again
Check the number of times the voltmeter needle fluctuates in 10 seconds.
Less than 8 times
8 time or more
Zero
Normal
Warm up the oxygen sensor with the engine at 2,500 rpm for approx. 120 seconds. And maintain engine at 2,500 rpm.
8 times or more
Check the number of times the voltmeter needle fluctuates in 10 seconds.
Zero
Less than 8 times
Disconnect terminates TE1 and E1 of the data link connector1. And maintain engine speed at 2,500 rpm.
Measure voltage between terminals VF1 (VF2) and E1.
More than 0 V
0 V
Read and record diagnostic trouble codes. (See page EG–634)
Normal code, codes Nos. 21, 25, 26 and 28
Malfunction code(s) (Except code Nos. 21, 25, 26 and 28)
Repair the relevant diagnostic trouble code.
Malfunction code(s) (Except code Nos. 21, 25, 26 and 28)
Read and record diagnostic trouble codes. (See page EG–634)
Normal code, codes Nos. 21, 25, 26 and 28
Disconnect terminals TE1 and E1 of the data link connector 1. And maintain engine speed at 2,500 rpm.
Measure voltage between terminals VF1 (VF2) and E1.
0 V
5 V
Disconnect the PCV hose.
Repair (Over rich)
More than 0 V
Measure voltage between terminals VF1 (VF2) and E1.
0 V
Disconnect the ECT sensor connector, and connect resistor with a resistance of 4 – 8kΩ or send an equivalent simulation signal.
Connect terminals TE1 and E1 of the data link connector 1.
Warm up the oxygen sensor with the engine at 2,500 rpm for approx. 120 seconds. And maintain engine speed at 2,500 rpm.
Measure voltage between terminals VF1 (VF2) and E1.
0 V
5 V
Replace the oxygen sensor.
Repair (Over lean)

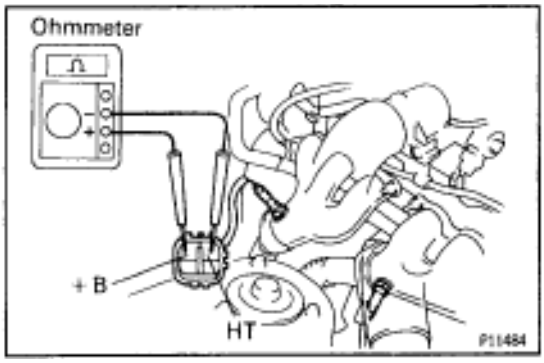

3. California only:
INSPECT HEATER RESISTANCE OF MAIN HEATED OXYGEN SENSORS

(a) Disconnect the oxygen sensor connectors.

(b) Using an ohmmeter, measure the resistance between the terminals +B and HT.

Resistance:

At 20°C (68°F) 11–16 Ω

If the resistance is not as specified, replace the sensor.

Torque: 44 N·m (450 kgf·cm, 33 ft·lbf)

(c) Reconnect the oxygen sensor connectors.

Sub Heated Oxygen Sensor (California only)
COMPONENTS FOR REMOVAL AND INSTALLATION

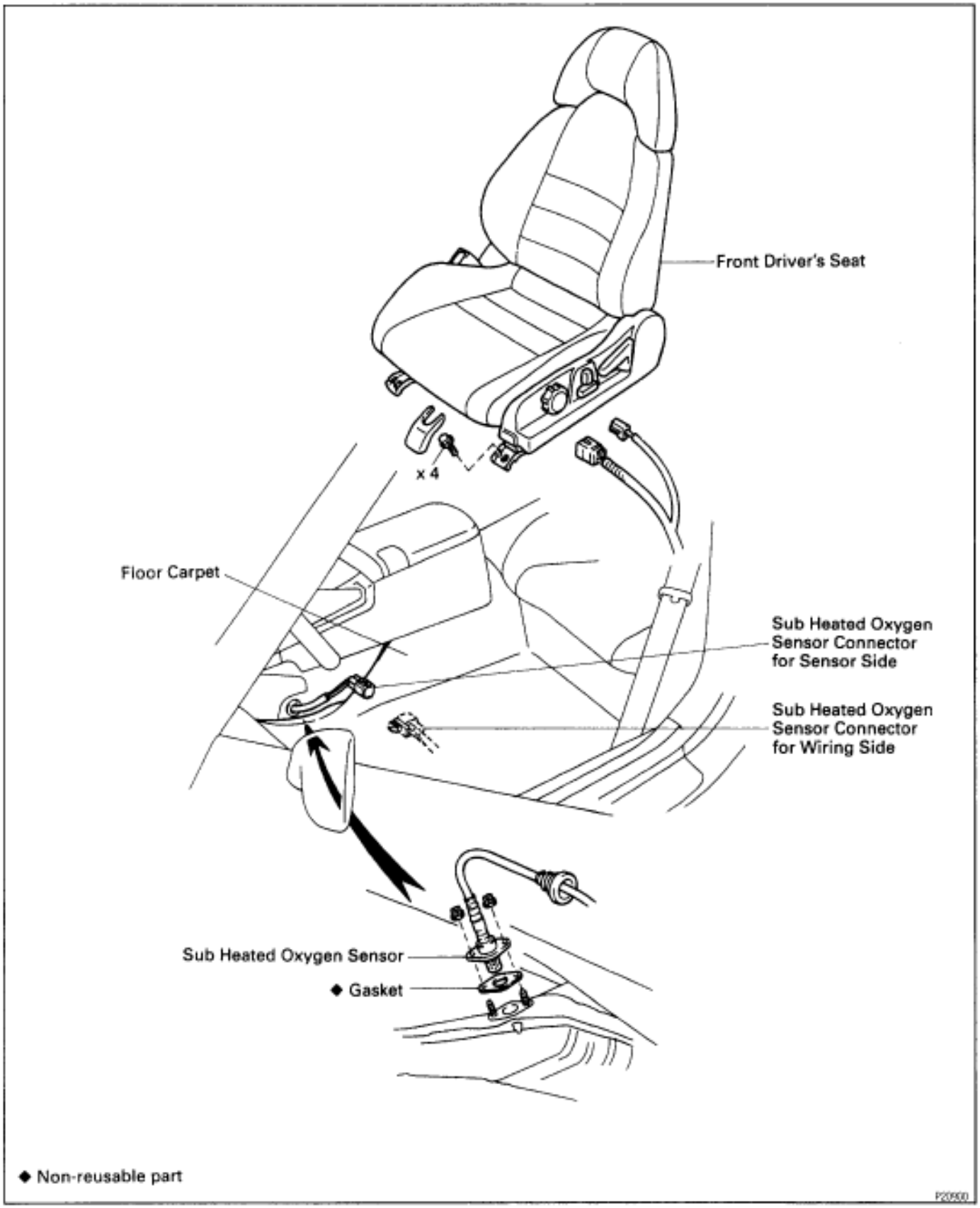

OXYGEN SENSOR INSPECTION

1. INSPECT OPERATION OF SUB HEATED OXYGEN SENSOR

(See circuit inspection in Engine Troubleshooting)

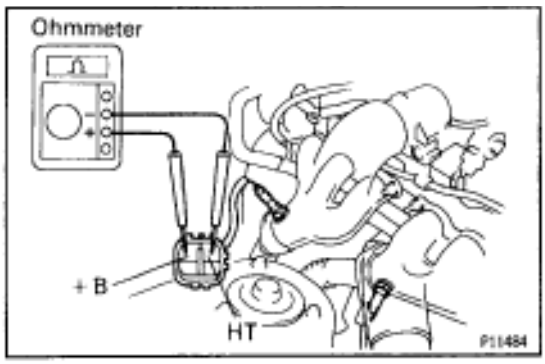

2. INSPECT HEATER RESISTANCE OF SUB HEATED OXYGEN SENSOR

(a) Remove the driver's seat.

(b) Take out the console box side of the floor carpet.

(c) Disconnect the oxygen sensor connector.

(d) Using an ohmmeter, measure the resistance between the terminals +B and HT.

Resistance:

At 20°C (68°F) 11–16 Ω

If the resistance is not as specified, replace the sensor.

Torque: 20 N·m (200 kgf·cm, 14 ft·lbf)

(e) Reconnect the oxygen sensor connector.

(f) Reinstall the floor carpet.

(g) Reinstall the driver's seat.

FUEL PUMP ECU
COMPONENTS FOR REMOVAL AND INSTALLATION

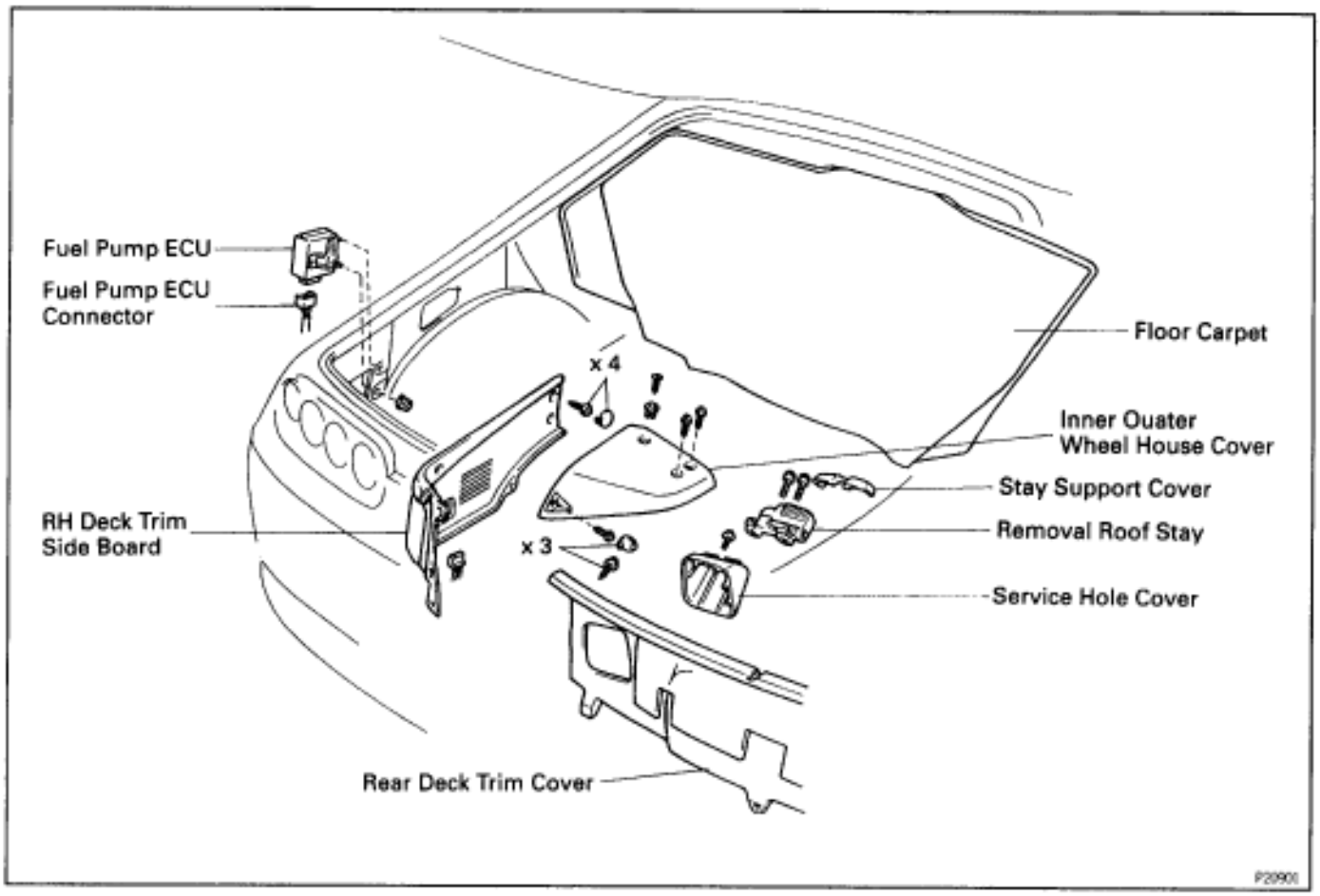

FUEL PUMP ECU INSPECTION

1. **REMOVE FUEL PUMP ECU**
2. **INSPECT FUEL PUMP ECU**
   (See circuit inspection in Engine Troubleshooting)
3. **REINSTALL FUEL PUMP ECU**

ENGINE CONTROL MODULE (ECM) COMPONENTS FOR REMOVAL AND INSTALLATION

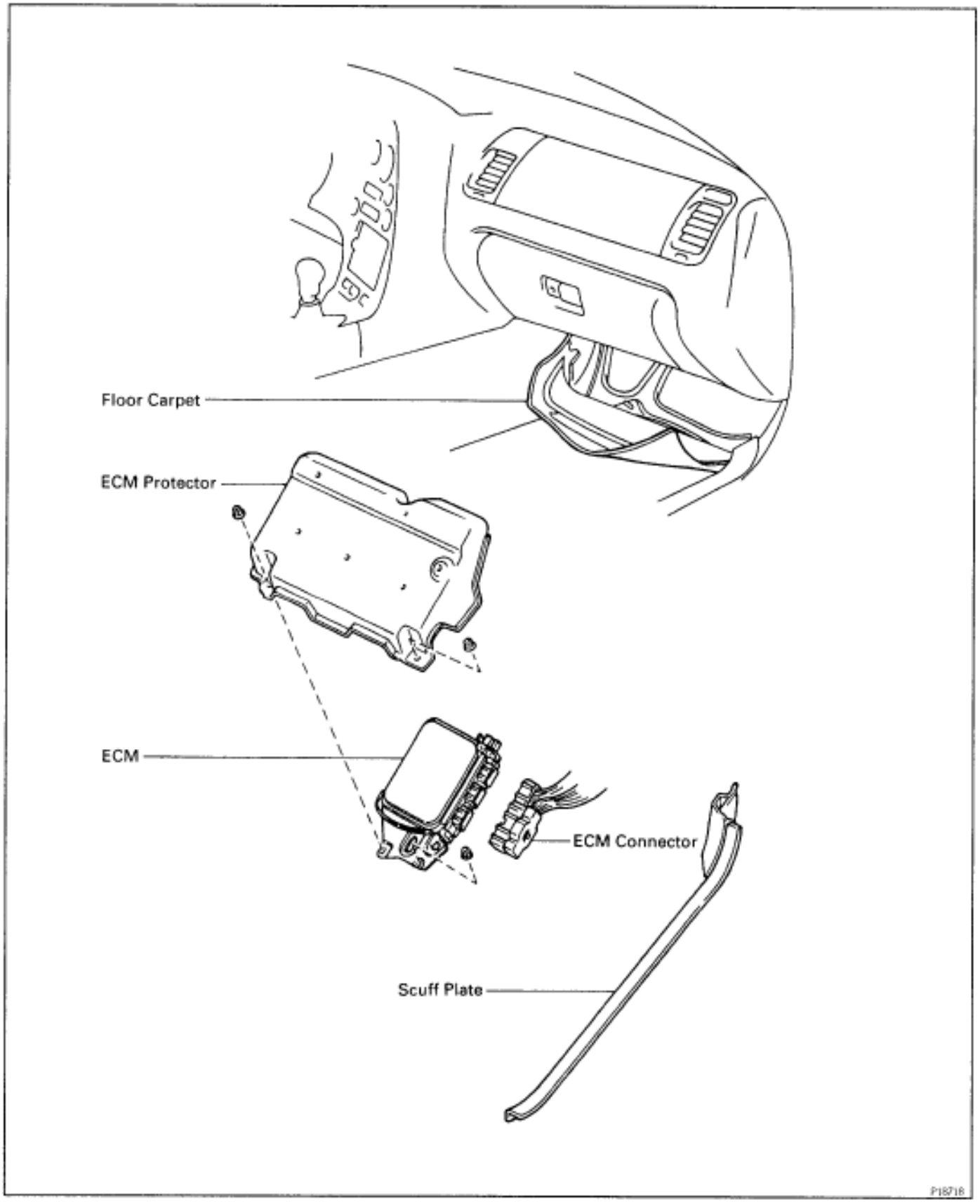

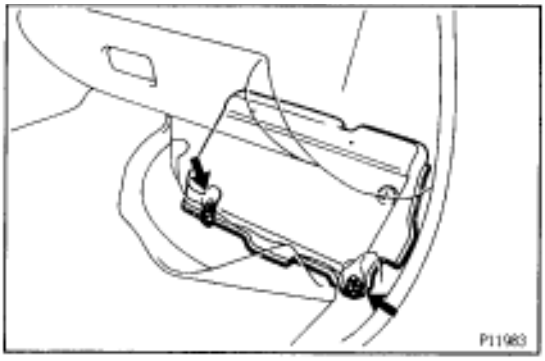

ECM INSPECTION

1. DISCONNECT NEGATIVE (–) TERMINAL CABLE FROM BATTERY

2. REMOVE SCUFF PLATE

3. REMOVE ECM PROTECTOR

(a) Take out the front side of the floor carpet.

(b) Remove the 2 nuts and ECM protector.

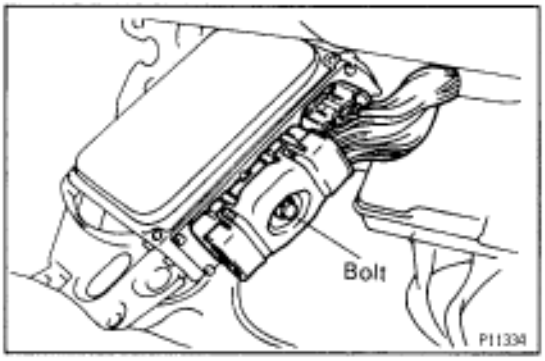

4. REMOVE ECM

(a) Remove the nut, and disconnect the ECM from the floor panel.

(b) Fully loosen the bolt and disconnect the 2 ECM connectors, and remove the ECM.

5. INSPECT ECM

(See standard value of ECM terminals in Engine Troubleshooting)

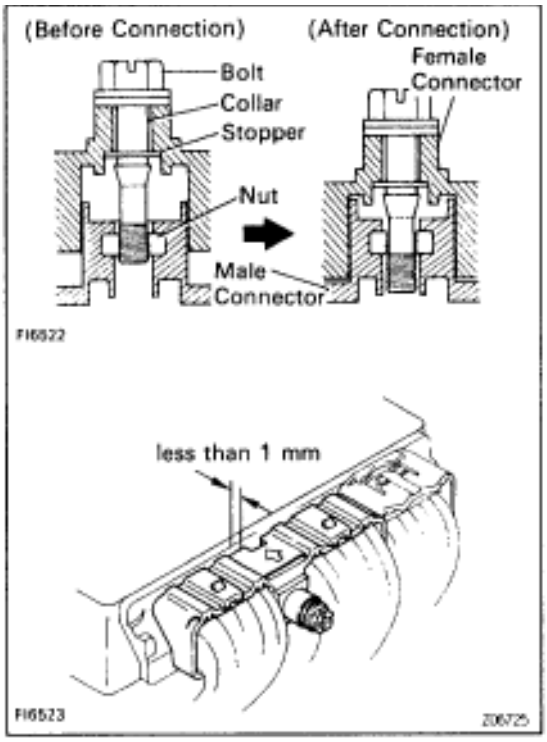

6. REINSTALL ECM

(a) Connect the 2 ECM connectors.

- Match the male connector correctly with the female connector, then press them together.
- Tighten the bolt.

Make sure the connector is completely connected by tightening the bolt until there is a clearance of less than 1 mm (0.04 in.) between the bottom of the male connector and the end of the female connector.

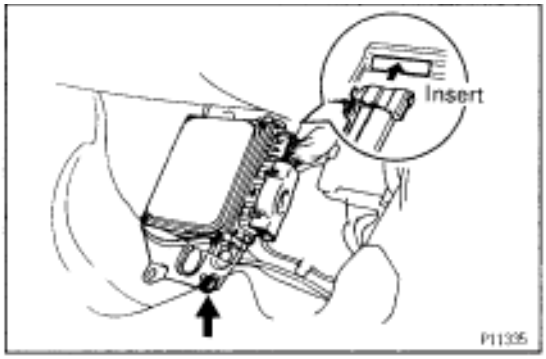

(b) Insert the ECM bracket into the stay on the floor panel.

(c) Install the ECM with the nut.

7. REINSTALL ECM PROTECTOR

8. REINSTALL SCUFF PLATE

9. RECONNECT NEGATIVE (–) TERMINAL CABLE TO BATTERY

FUEL CUT RPM
FUEL CUT RPM INSPECTION

1. WARM UP ENGINE

Allow the engine to warm up to normal operating temperature.

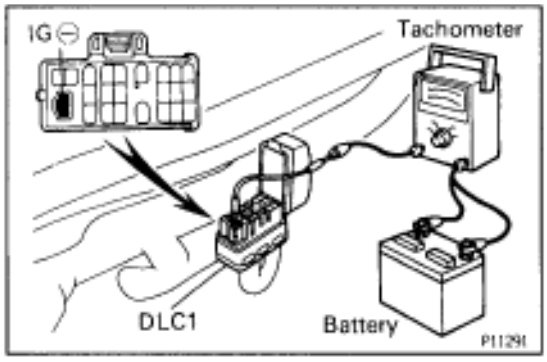

2. CONNECT TACHOMETER TO ENGINE

Connect the tester probe of a tachometer to terminal IG⊖ of the DLC1.

NOTICE:

- **Never allow the tachometer terminal to touch ground as it could result in damage to the igniter and/or ignition coil.**
- **As some tachometers are not compatible with this ignition system, we recommend that you confirm the compatibility of your unit before use.**

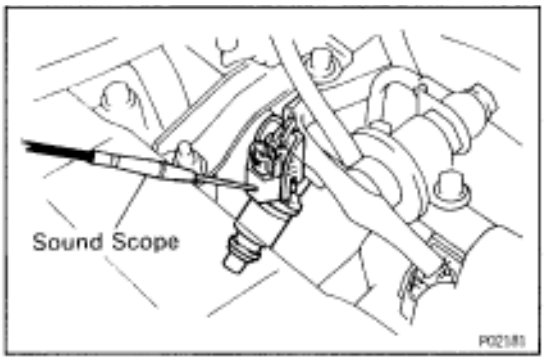

3. INSPECT FUEL CUTOFF OPERATION

(a) Increase the engine speed to at least 3,000 rpm.

(b) Check for injector operating noise.

(c) Check that when the throttle lever is released, injector operation noise stops momentarily and then resumes.

HINT: Measure with the A/C OFF.

Fuel return speed:

1,400 rpm

4. DISCONNECT TACHOMETER

SERVICE SPECIFICATIONS
SERVICE DATA

Fuel pressure regulator	Fuel pressure	at no vacuum	265–304 kPa (2.7–3.1 kgf/cm^2, 38–44 psi)
Fuel pump	Resistance	at 20˚C (68˚F)	0.2–3.0 Ω
Injector	Resistance Injection volume Difference between each cylinder Fuel leakage		13.4–14.2 Ω 70–88 cm^3 (4.3–5.4 cu in.) per 15 sec. 9 cm^3 (0.5 cu in.) or less One drop or less per minute
VAF meter	Resistance (THA–E2)	at–20˚C (–4˚F) at 0˚C (32˚F) at 20˚C (68˚F) at 40˚C (104˚F) at 60˚C (140˚F)	10–20 kΩ 4–7 kΩ 2–3 kΩ 0.9–1.3 kΩ 0.4–0.7 kΩ
Throttle body	Throttle body fully closed angle Dashpot setting speed Throttle opener setting speed	 M/T A/T 	6° 2,600 ± 400 rpm 1,800 ± 400 rpm 1,500 ± 400 rpm
Throttle position sensor	Clearance between stop screw and lever 0 mm (0 in.) 0.40 mm (0.016 in.) 0.60 mm (0.024 in.) Throttle valve fully open –	 VTA–E2 IDL–E2 IDL–E2 VTA–E2 VC–E2	0.34–6.3 kΩ 0.5 kΩ or less Infinity 2.4–11.2 kΩ 3.1–7.2 kΩ
IAC valve	Resistance	B1 (or B2)–Others	18–22 Ω
VSV for ACIS	Resistance	at 20˚C (68˚F)	38.5–44.5Ω
VSV for Fuel pressure control (California only)	Resistance	at 20˚C (68˚F)	33–39 Ω
VSV for EVAP	Resistance	at 20˚C (68˚F)	27–33 Ω
VSV for EGR	Resistance	at 20˚C (68˚F)	38.5–44.5 Ω
ECT sensor	Resistance	at –20˚C (–4˚F) at 0˚C (32˚F) at 20˚C (68˚F) at 40˚C (104˚F) at 60˚C (140˚F) at 80˚C (176˚F)	10–20 kΩ 4–7 kΩ 2–3 kΩ 0.9–1.3 kΩ 0.4–0.7 kΩ 0.2–0.4 kΩ
EGR gas temperature sensor	Resistance	at 50˚C (122˚F) at 100˚C (212˚F) at 150˚C (302˚F)	64–97 kΩ 11–16 kΩ 2–4 kΩ
Main heated oxygen sensor (California)	Heater coil resistance	at 20˚C (68˚F)	11–16 Ω

Sub heated oxygen sensor (California only)	Heater coil resistance at 20˚C (68˚F)	11–16 Ω
Fuel cut rpm	Fuel return rpm	1,400 rpm

TORQUE SPECIFICATIONS

Part tightened	N·m	kgf·cm	ft·lbf
Fuel line for union bolt	29	300	22
Fuel line for flare nut	30	310	22
Fuel pressure regulator x Delivery pipe	8.8	90	78 in.·lbf
Delivery pipe x Intake manifold	21	210	15
Actuator for ACIS x Air intake chamber	6.8	70	61 in.·lbf
Fuel inlet pipe x Delivery pipe	41	420	30
Fuel return pipe x Fuel pressure regulator	27	280	20
Air intake chamber stay x Cylinder head	18	185	13
Air intake chamber stay x Air intake chamber	18	185	13
Intake air connector x Air intake chamber	27	270	20
Throttle body bracket x Throttle body	21	210	15
Throttle body bracket x Cylinder head	21	210	15
No.2 vacuum pipe x Intake manifold	27	270	20
EGR pipe x Cylinder head	27	270	20
EGR pipe x EGR valve	64	650	47
Fuel pressure pulsation damper x Fuel pipe support	41	420	30
Fuel pressure pulsation damper x Fuel pipe support for SST	35	350	25
Starter x Transmission	39	400	29
Fuel tank band x Body	39	400	29
VAF meter x Air cleaner case	10	100	7
Throttle body x Intake air connector	21	210	15
Vacuum tank x Intake manifold	21	210	15
Brake booster union x Air intake chamber	29	300	22
Air intake chamber x Intake manifold	27	270	20
EGR gas temperature sensor x EGR valve	20	200	14
Knock sensor x Cylinder block	44	450	33
Oxygen sensor (Except California) x Exhaust manifold	20	200	14
Main heated oxygen sensor (California) x Exhaust manifold	44	450	33
Sub heated oxygen sensor (California only) x Center exhaust pipe	20	200	14

SFI SYSTEM (2JZ–GTE)

PREPARATION

SST (SPECIAL SERVICE TOOLS)

	09205–76030 Cylinder Head Setting Bolt Tightening Adaptor	ECT sensor
	09268–41045 Injection Measuring Tool Set	
	(09268–41070) No.4 Union	
	(90405–09015) No.1 Union	
	09268–45012 EFI Fuel Pressure Gauge	
	09612–24014 Steering Gear Housing Overhaul Tool Set	
	(09617–24011) Steering Rack Wrench	Fuel pressure pulsation damper
	09631–22020 Power Steering Hose Nut 14 x 17 mm Wrench Set	Fuel line flare nut
	09808–14010 Fuel Sender Gauge Tool Assy	
	09816–30010 Oil Pressure Switch Socket	Knock sensor
	09842–30080 Wiring “E” EFI Inspection	Injector
	09843–18020 Diagnosis Check Wire	

	09990–01000 Engine Control Computer Check Harness “A”	

RECOMMENDED TOOLS

	09082–00050 TOYOTA Electrical Tester Set ◆	
	09200–00010 Engine Adjust Kit ◆	
	09258–00030 Hose Plug Set ◆	Plug for vacuum hose, fuel hose etc.

EQUIPMENT

Carburetor cleaner	
Graduated cylinder	Injector
Soft brush	
Sound scope	Injector
Tachometer	
Torque wrench	
Vacuum gauge	

COOLANT

Item		Capacity	Classification
Engine coolant (w/ Heater)	M/T	9.5 liters (10.0 US qts, 8.4 lmp. qts)	Ethylene–glycol base
	A/T	9.4 liters (9.9 US qts, 8.3 lmp. qts)	

PRECAUTION

1. **Before working on the fuel system, disconnect the negative (–) terminal cable from the battery.**
   HINT: Any diagnostic trouble code retained by the computer will be erased when the negative (–) terminal cable is disconnected.
   Therefore, if necessary, read the diagnosis before disconnecting the negative (–) terminal cable from the battery.
2. **Do not smoke or work near an open flame when working on the fuel system.**
3. **Keep gasoline away from rubber or leather parts.**

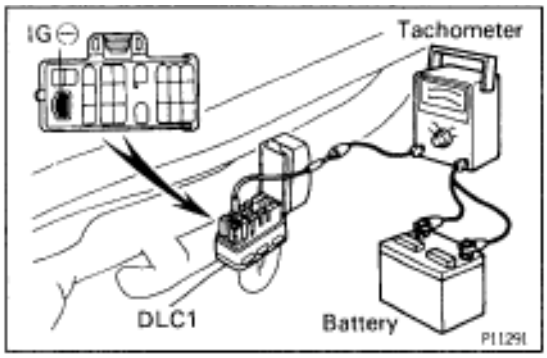

MAINTENANCE PRECAUTIONS

1. PRECAUTION WHEN CONNECTING GAUGE

(a) Use battery as the power source for the timing light, tachometer, etc.

(b) Connect the tester probe of a tachometer to the terminal IG⊖ of the DLC1.

2. IN EVENT OF ENGINE MISFIRE, FOLLOWING PRECAUTIONS SHOULD BE TAKEN

(a) Check proper connection of battery terminals, etc.

(b) After repair work, check that the ignition coil terminals and all other ignition system lines are reconnected securely.

(c) When cleaning the engine compartment, be especially careful to protect the electrical system from water.

3. PRECAUTIONS WHEN HANDLING OXYGEN SENSOR

(a) Do not allow oxygen sensor to drop or hit against an object.

(b) Do not allow the sensor to come into contact with water.

IF VEHICLE IS EQUIPPED WITH MOBILE RADIO SYSTEM (HAM, CB, ETC.)

If the vehicle is equipped with a mobile communication system, refer to the precaution in the IN section.

AIR INDUCTION SYSTEM

1. Separation of the engine oil dipstick, oil filler cap, PCV hose, etc. may cause the engine to run out of tune.
2. Disconnection, looseness or cracks in the parts of the air induction system between the throttle body and cylinder head will cause air suction and cause the engine to run out of tune.

ELECTRONIC CONTROL SYSTEM

1. Before removing SFI wiring connectors, terminals, etc., first disconnect the power by either turning the ignition switch OFF or disconnecting the negative (–) terminal cable from the battery.
   HINT: Always check the diagnostic trouble code before disconnecting the negative (–) terminal cable from the battery.
2. When installing the battery, be especially careful not to incorrectly connect the positive (+) and negative (–) cables.
3. Do not permit parts to receive a severe impact during removal or installation. Handle all SFI parts carefully, especially the ECM.
4. Do not be careless during troubleshooting as there are numerous transistor circuits and even slight terminal contact can cause further troubles.
5. Do not open the ECM cover.
6. When inspecting during rainy weather, take care to prevent entry of water. Also, when washing the engine compartment, prevent water from getting on the SFI parts and wiring connectors.
7. Parts should be replaced as an assembly.
8. Care is required when pulling out and inserting wiring connectors.

(a) Release the lock and pull out the connector, pulling on the connectors.

(b) Fully insert the connector and check that it is locked.

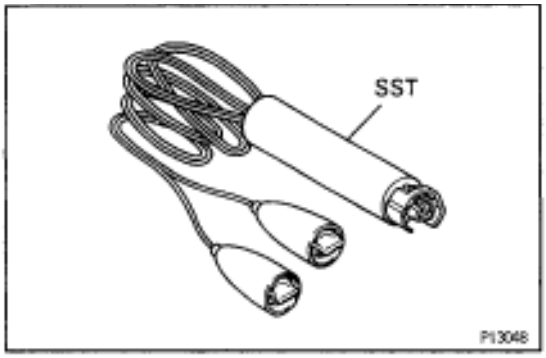

9. Use SST for inspection or test of the injector or its wiring connector.
   SST 09842–30060

FUEL SYSTEM

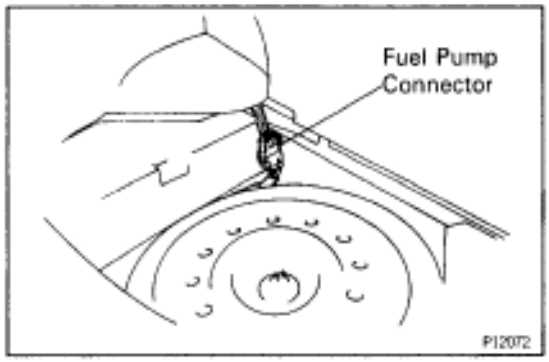

1. When disconnecting the high pressure fuel line, a large amount of gasoline will spill out, so observe the following procedures:

(a) Disconnect the fuel pump connector.
(b) Start the engine. After the engine has stopped on its own, turn off the ignition switch.

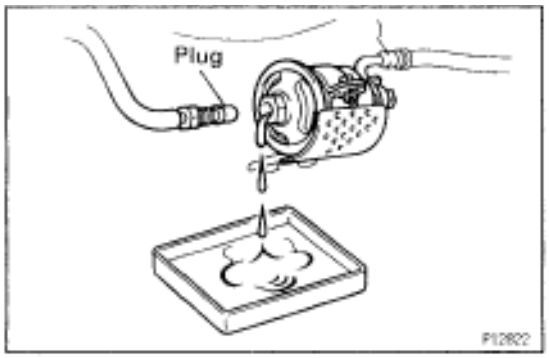

(c) Put a container under the connection.
(d) Slowly loosen the connection.
(e) Disconnect the connection.
(f) Plug the connection with a rubber plug.
(g) Reconnect the fuel pump connector.

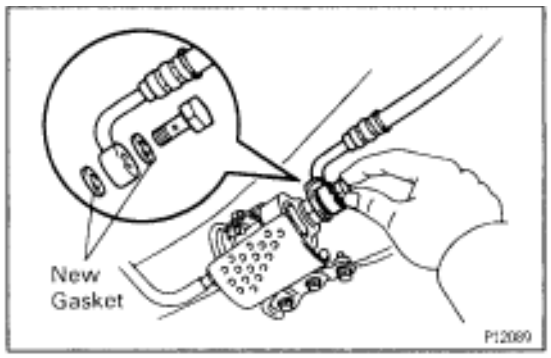

2. When connecting the flare nut or union bolt on the high pressure pipe union, observe the following procedures:
   Union Bolt Type:

(a) Always use a new gasket.
(b) Tighten the union bolt by hand.
(c) Tighten the union bolt to the specified torque.
   Torque: 29 N·m (300 kgf·cm, 22 ft·lbf)

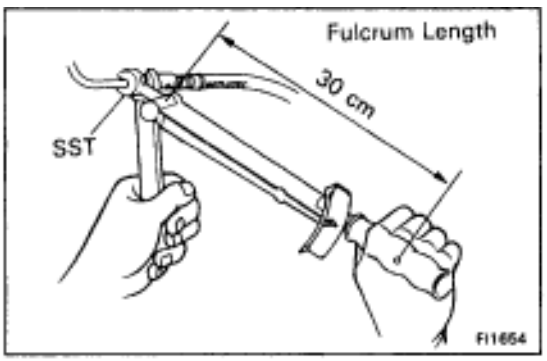

Flare Nut Type:

(a) Apply a light coat of engine oil to the flare nut, and tighten the flare nut by hand.
(b) Using SST, tighten the flare nut to specified torque.
   SST 09631–22020
   Torque: 30 N·m (310 kgf·cm, 22 ft·lbf)
   HINT: Use a torque wrench with a fulcrum length of 30 cm (11.81 in.).

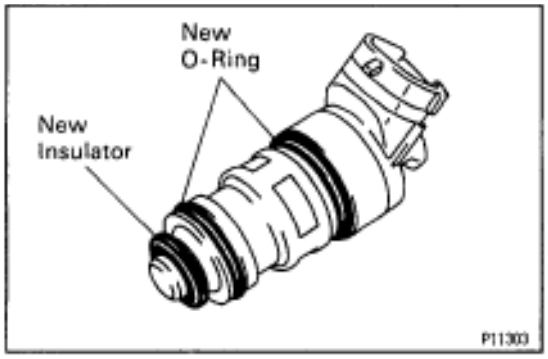

3. Observe the following precautions when removing and installing the injectors.
(a) Never reuse the O–ring.
(b) When placing a new O–ring on the injector, take care not to damage it in any way.
(c) Coat a new O–ring with spindle oil or gasoline before installing–never use engine, gear or brake oil.

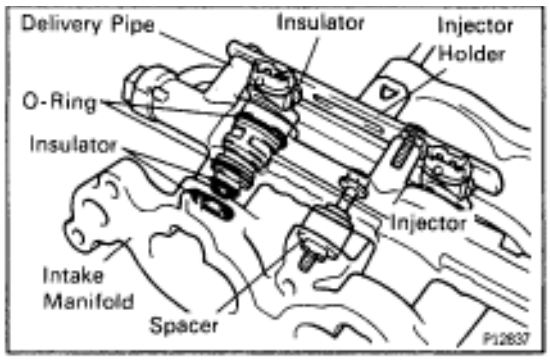

4. Install the injector to the delivery pipe and intake manifold as shown in the illustration.

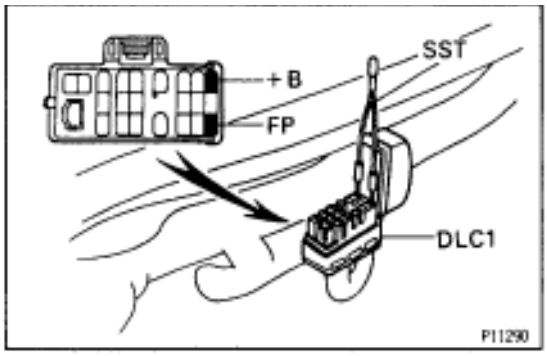

5. Check that there are no fuel leaks after doing maintenance anywhere on the fuel system.
(a) Using SST, connect terminals +B and FP of the DLC 1.
SST 09843–18020
(b) With engine stopped, turn the ignition switch ON.

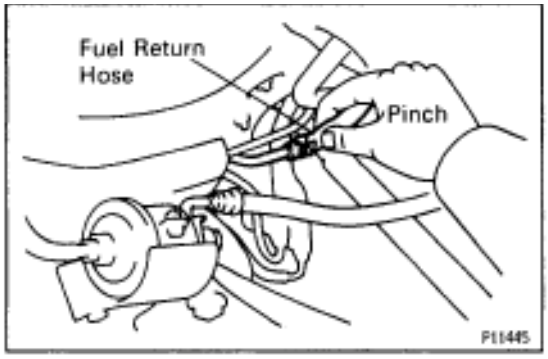

(c) Pinch the fuel return hose.
The pressure in the high pressure line will rise to approx. 392 kPa (4 kgf/cm^2, 57 psi). In this state, check to see that there are no leaks from any part of the fuel system.
NOTICE: Always pinch the hose. Avoid bending as it may cause the hose to crack.
(d) Turn the ignition switch OFF.
(e) Remove the SST from the DLC1.
SST 09843–18020

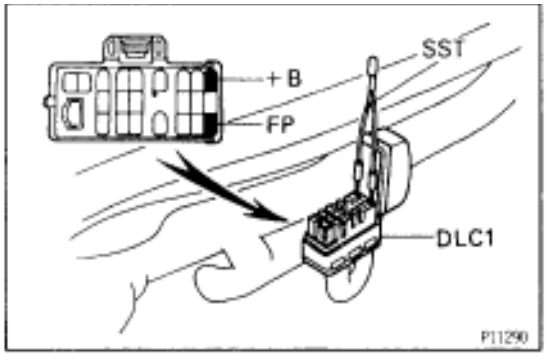

FUEL PUMP
ON–VEHICLE INSPECTION

1. CHECK FUEL PUMP OPERATION

(a) Using SST, connect terminals +B and FP of the DLC 1.
SST 09843–18020

(b) Turn the ignition switch ON.
NOTICE: Do not start the engine.

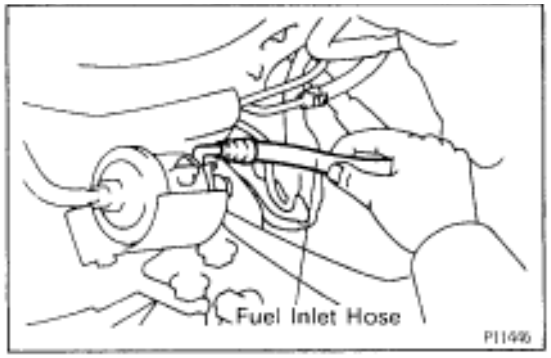

(c) Check that there is pressure in the fuel inlet hose from the fuel filter.
HINT: If there is fuel pressure, you will hear the sound of fuel flowing.
If there is no pressure, check the following parts:
- Fuses
- EFI No.2 relay
- Fuel pump
- ECM
- Wiring connections

(d) Turn the ignition switch OFF

(e) Remove the SST from the DLC1.
SST 09843–18020

2. CHECK FUEL PRESSURE

(a) Check the battery voltage is above 12 V.

(b) Disconnect the negative (–) terminal cable from the battery.

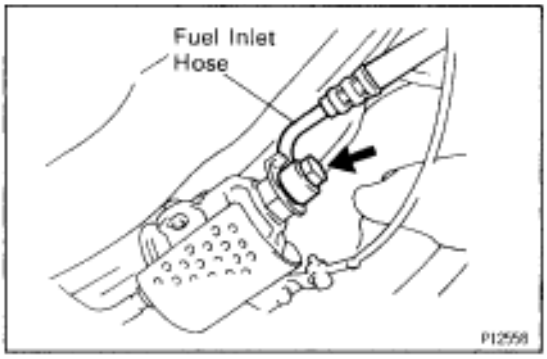

(c) Remove the union bolt and 2 gaskets, disconnect the fuel inlet hose from the fuel filter.
CAUTION:
- **Put a suitable container or shop towel under the fuel filter.**
- **Slowly loosen the union bolt.**

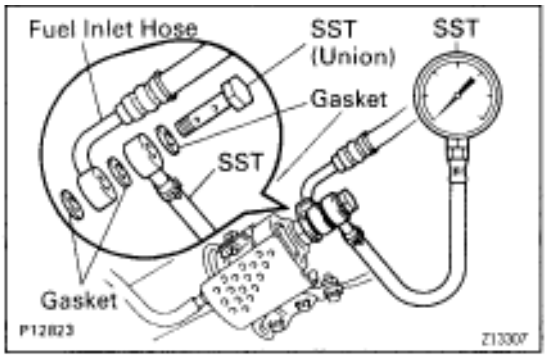

(d) Install the fuel inlet hose and SST (pressure gauge) to the fuel filter with the 3 gaskets and SST (union bolt).
SST 09268–45012
Torque: 29 N·m (300 kgf·cm, 22 ft·lbf)

(e) Wipe off any splattered gasoline.

(f) Using SST, connect terminals +B and FP of the DLC 1.
SST 09843–18020

(g) Reconnect the negative (–) terminal cable to the battery.
(h) Turn the ignition switch ON.
(i) Measure the fuel pressure.
Fuel pressure:
226–275 kPa (2.3–2.8 kgf/cm^2, 33–40 psi)
If pressure is high, replace the fuel pressure regulator.
If pressure is low, check the following parts:
- Fuel hoses and connections
- Fuel pump
- Fuel filter
- Fuel pressure regulator

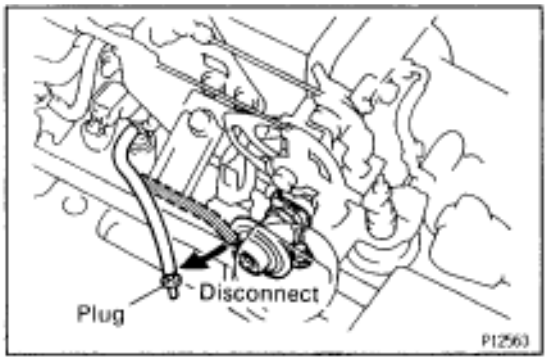

(j) Remove the SST from the DLC1.
SST 09843–18020
(k) Start the engine.
(l) Disconnect the vacuum sensing hose from the fuel pressure regulator, and plug the hose end.
(m) Measure the fuel pressure at idle.
Fuel pressure:
226–275 kPa (2.3–2.8 kgf/cm^2, 33–40 psi)
(n) Reconnect the vacuum sensing hose to the fuel pressure regulator.
(o) Measure the fuel pressure at idle.
Fuel pressure:
167–216 kPa (1.7–2.2 kgf/cm^2, 24–31 psi)
If pressure is not as specified, check the vacuum sensing hose and fuel pressure regulator.
(p) Stop the engine.
(q) Check that the fuel pressure remains as specified for 5 minutes after the engine has stopped.
Fuel pressure:
147 kPa (1.5 kgf/cm^2, 21 psi) or more
If pressure is not as specified, check the fuel pump, pressure regulator and/or injectors.
(r) After checking fuel pressure, disconnect the negative (–) terminal cable from the battery and carefully remove the SST to prevent gasoline from splashing.
SST 09268–45012
(s) Reinstall the fuel inlet hose to the fuel filter with 2 new gaskets and the union bolt.
Torque: 29 N·m (300 kgf·cm, 22 ft·lbf)
(t) Reconnect the negative (–) terminal cable to the battery.
(u) Check for fuel leaks.
(See item 5 in fuel system in precaution)

COMPONENTS FOR REMOVAL AND INSTALLATION

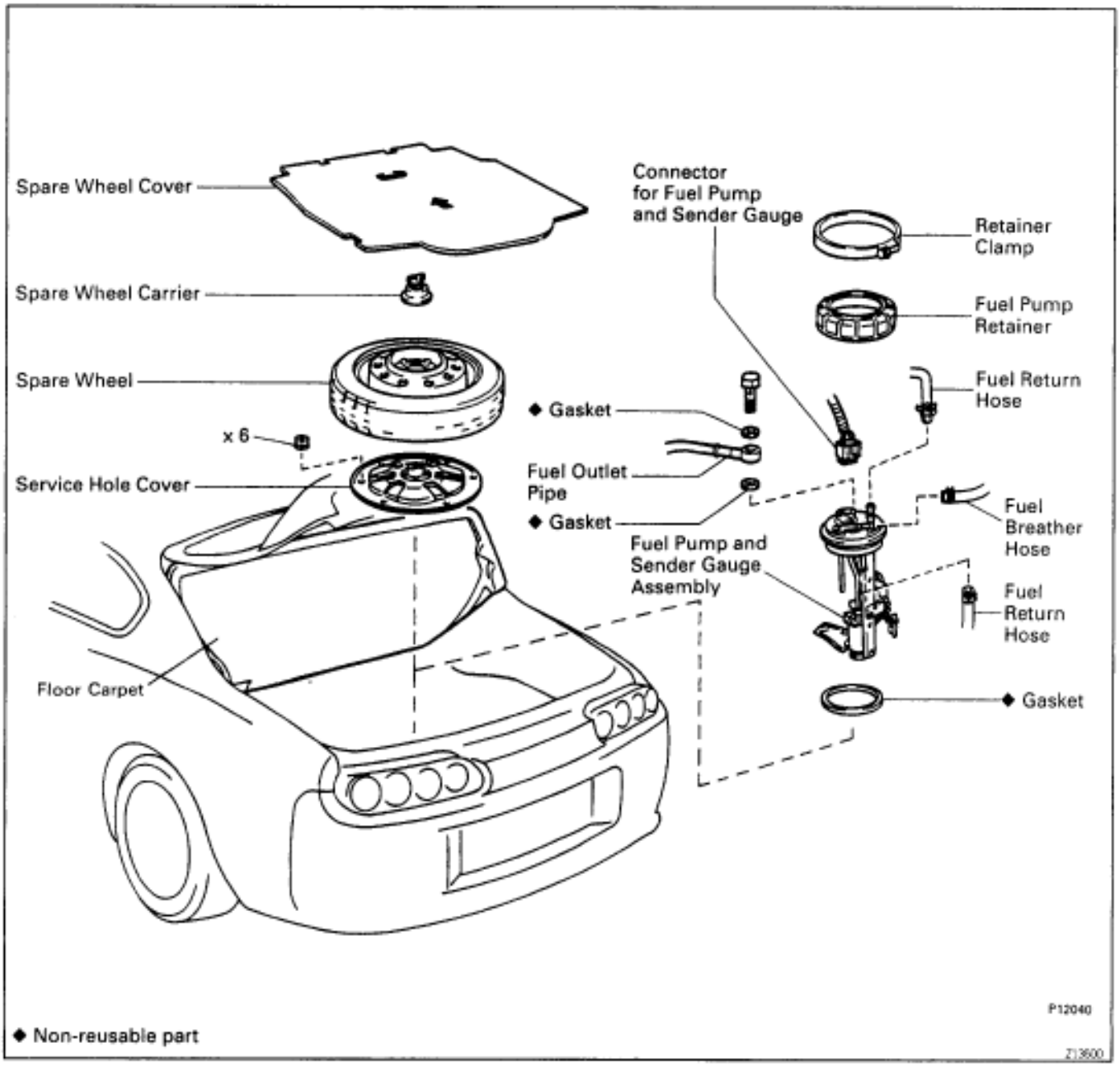

FUEL PUMP REMOVAL

CAUTION: Do not smoke or work near an open flame when working on the fuel pump.

1. **TAKE OUT FLOOR CARPET**
2. **REMOVE SPARE WHEEL COVER**
3. **REMOVE SPARE WHEEL**
4. **REMOVE SERVICE HOLE COVER**

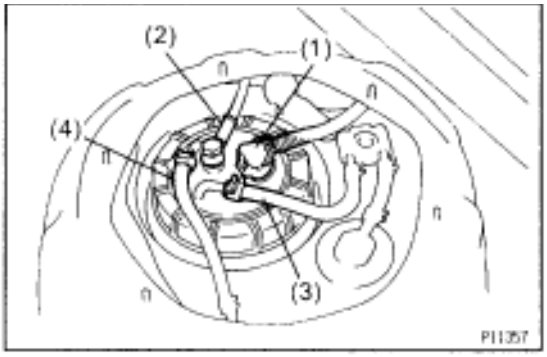

5. REMOVE FUEL PUMP AND SENDER GAUGE ASSEMBLY

(a) Disconnect the connector and hoses from the fuel pump bracket:
- (1) Fuel pump connector
- (2) Fuel outlet hose
  Remove the union bolt and 2 gaskets, and disconnect the outlet hose.
- (3) Fuel return hose
- (4) Fuel breather hose

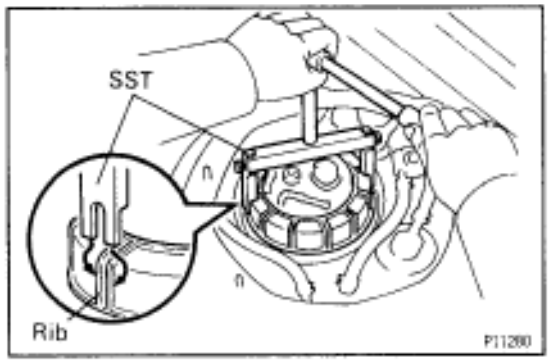

(b) Remove the retainer clamp.

(c) Using SST, loosen the retainer.
SST 09808–14010

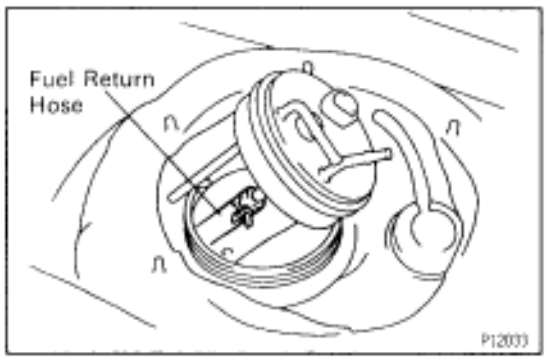

(d) Remove the retainer, and disconnect the fuel pump and sender gauge assembly from the fuel tank.

(e) Disconnect the fuel return hose from the return port of the fuel pump bracket.

(f) Remove the fuel pump, sender gauge assembly and gasket.

FUEL PUMP INSPECTION

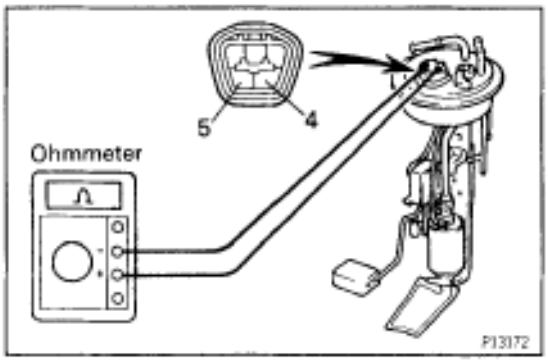

1. INSPECT FUEL PUMP RESISTANCE

Using an ohmmeter, measure the resistance between terminals 4 and 5.

Resistance:

0.1–3.0 Ω at 20°C (68°F)

If the resistance is not as specified, replace the fuel pump, lead wire or fuel pump bracket.

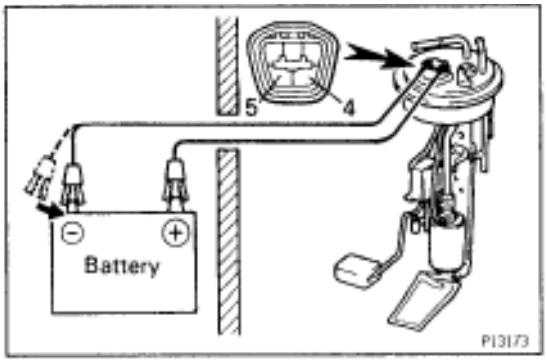

2. INSPECT FUEL PUMP OPERATION

Connect a tester lead from terminal 4 of the connector to the positive (+) terminal of the battery; connect another tester lead from terminal 5 of the connector to the negative (–) terminal of the battery.

NOTICE:

- **These tests must be performed quickly (within 10 seconds) to prevent the coil from burning out.**

- **Keep the fuel pump as far away from the battery as possible.**
- **Always connect or disconnect at the battery.**

If operation is not as specified, replace the fuel pump, lead wire or fuel pump bracket.

COMPONENTS FOR DISASSEMBLY AND ASSEMBLY

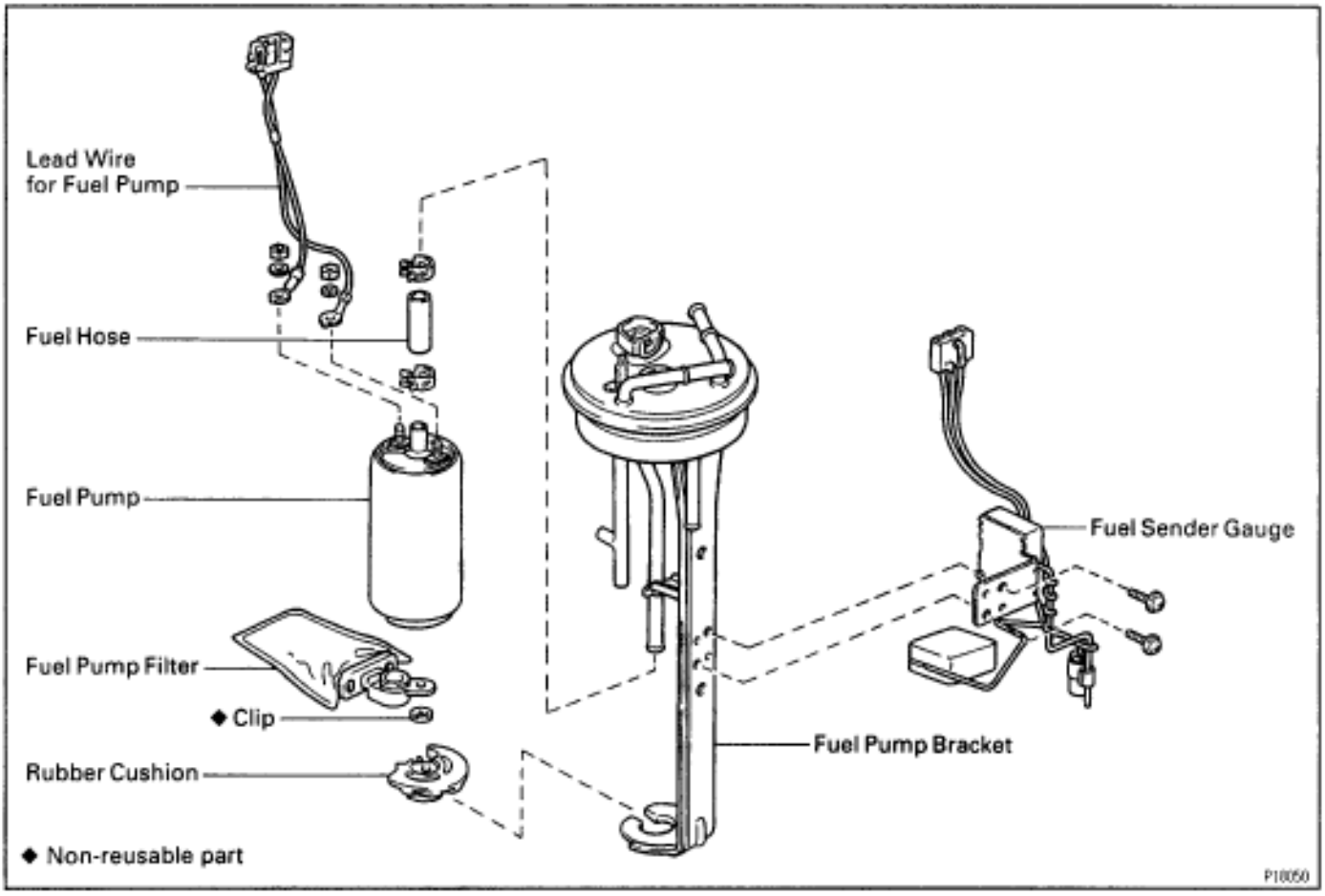

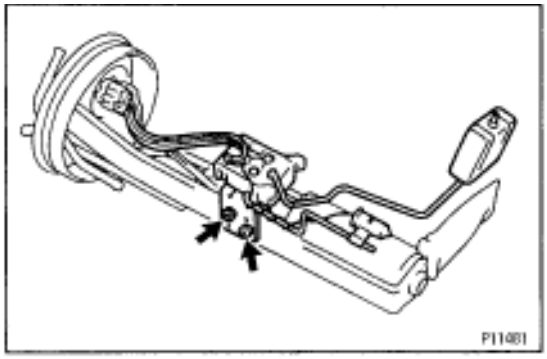

FUEL PUMP DISASSEMBLY

Assembly is in the reverse order of disassembly.

1. REMOVE FUEL SENDER GAUGE FROM FUEL PUMP BRACKET

(a) Disconnect the connector from the fuel pump bracket.
(b) Remove the 2 screws and sender gauge.

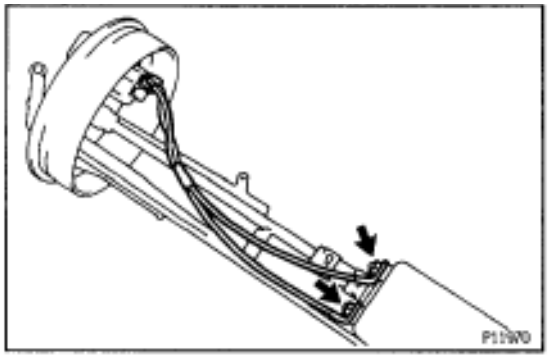

2. REMOVE FUEL PUMP FROM PUMP BRACKET

(a) Remove the 2 nuts and spring washers, and disconnect the lead wire from the fuel pump.

(b) Disconnect the connector from the fuel pump bracket, and remove the lead wire.

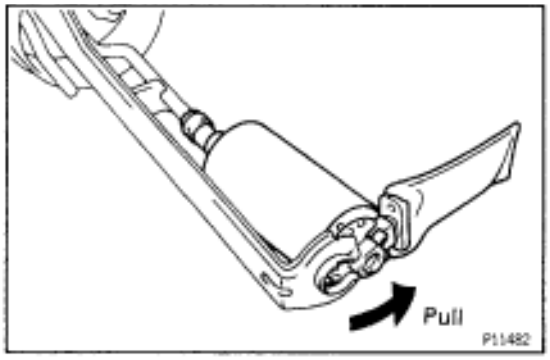

(c) Pull out the lower side of the fuel pump from the pump bracket.

(d) Remove the rubber cushion from the fuel pump.

(e) Disconnect the fuel hose from the fuel pump, and remove the fuel pump.

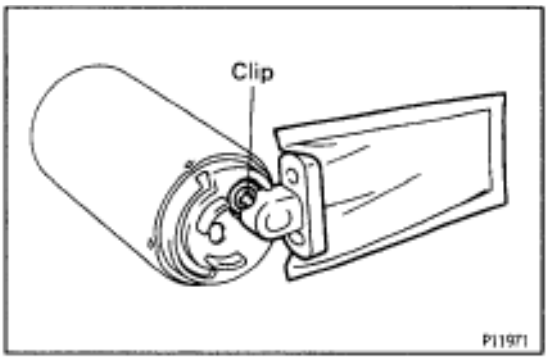

3. REMOVE FUEL PUMP FILTER FROM FUEL PUMP

(a) Using a small screwdriver, remove the clip.
INSTALLATION HINT: Use a new clip.

(b) Pull out the pump filter.

FUEL PUMP INSTALLATION

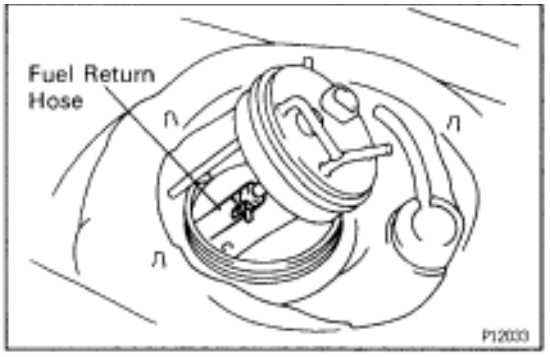

1. INSTALL FUEL PUMP AND SENDER GAUGE ASSEMBLY

(a) Install a new gasket to the fuel tank.

(b) Insert fuel pump and sender gauge assembly into the fuel tank.

(c) Connect the fuel return hose to the return port of the fuel pump bracket.

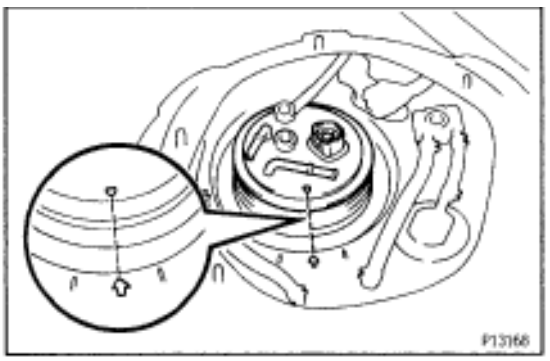

(d) Align the arrow marks of the fuel pump bracket and fuel tank.

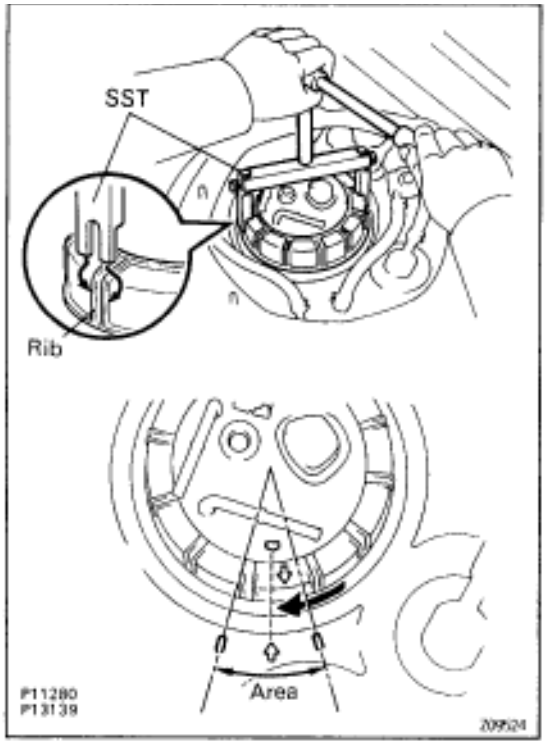

(e) Temporarily install the retainer.
(f) Using SST, tighten the retainer until the arrow mark on retainer is within the lines on the fuel tank.
SST 09808–14010
(g) Check that the arrow marks of the fuel pump bracket and fuel tank are aligned.

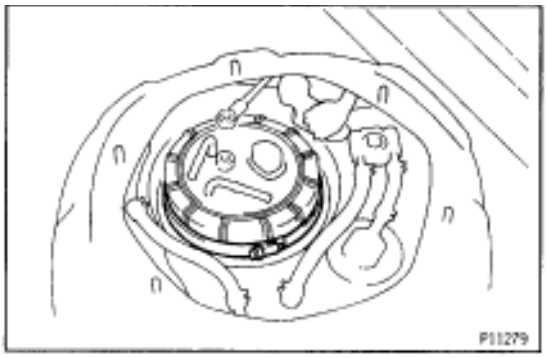

(h) Install the retainer clamp.
(i) Connect the connector and hoses to the fuel pump bracket:
- Fuel pump connector
- Fuel outlet hose

Connect the outlet hose with 2 new gaskets and the union bolt.
Torque: 29 N·m (300 kgf·cm, 22 ft·lbf)
- Fuel return hose
- Fuel breather hose

2. INSTALL SERVICE HOLE COVER
3. INSTALL SPARE WHEEL
4. INSTALL SPARE WHEEL COVER
5. INSTALL FLOOR CARPET
6. CHECK FOR FUEL LEAKS
(See item 5 in fuel system in precaution)

FUEL PRESSURE REGULATOR COMPONENTS FOR REMOVAL AND INSTALLATION

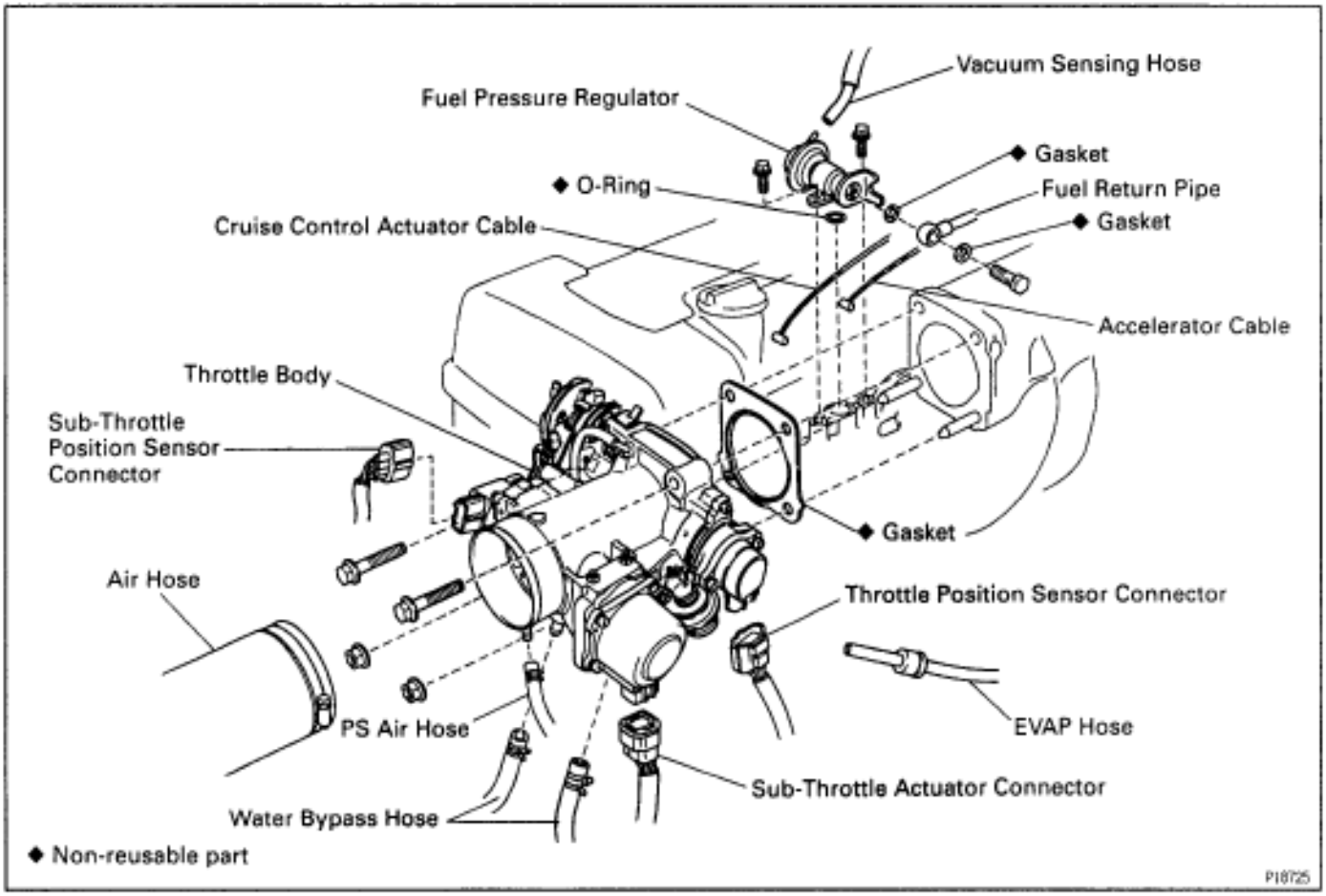

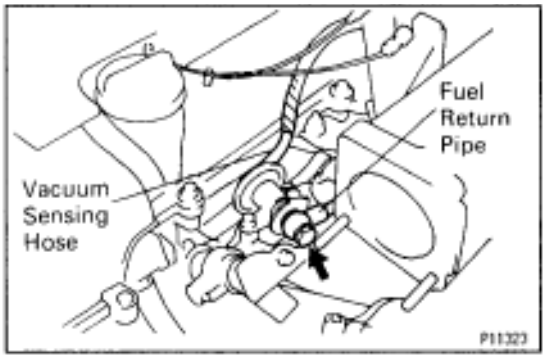

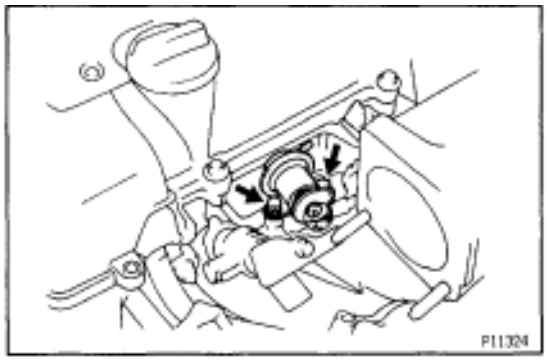

FUEL PRESSURE REGULATOR REMOVAL

1. **REMOVE THROTTLE BODY**
   (See throttle body removal)
2. **DISCONNECT VACUUM SENSING HOSE FROM FUEL PRESSURE REGULATOR**
3. **DISCONNECT FUEL RETURN PIPE FROM FUEL PRESSURE REGULATOR**
   Remove the union bolt and 2 gaskets, and disconnect the return pipe from the pressure regulator.
   CAUTION:
   - **Put a shop rag under the pressure regulator.**
   - **Slowly loosen the union bolt.**
4. **REMOVE FUEL PRESSURE REGULATOR**

(a) Remove the 2 bolts, and pull out the pressure regulator.
(b) Remove the O–ring from the pressure regulator.

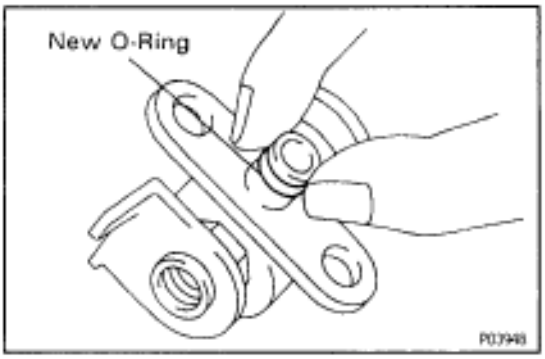

FUEL PRESSURE REGULATOR INSTALLATION

1. INSTALL FUEL PRESSURE REGULATOR

(a) Apply a light coat of gasoline to a new O–ring, and install it to the pressure regulator.

(b) Attach the pressure regulator to the delivery pipe.

(c) Check that the pressure regulator rotates smoothly.
NOTICE: If it does not rotate smoothly, the O–ring may be pinched, so remove the pressure regulator and do steps (b) and (c) above again.

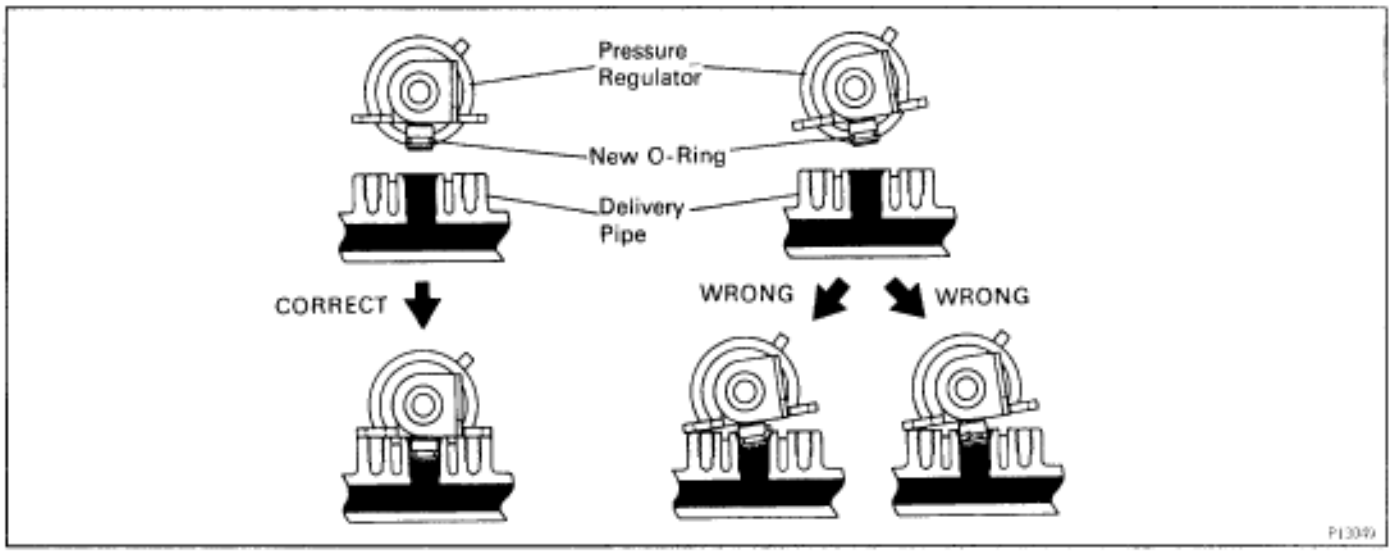

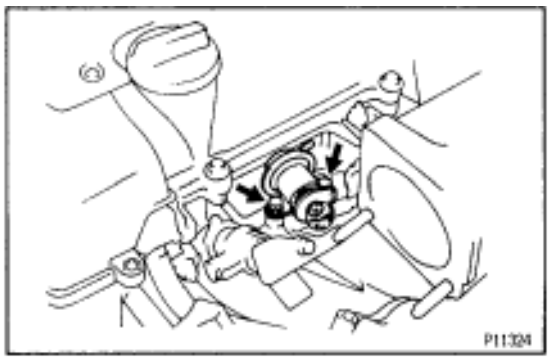

(d) Install the pressure regulator with the 2 bolts.
Torque: 8.8 N·m (90 kgf·cm, 78 in.·lbf)

2. CONNECT FUEL RETURN PIPE TO FUEL PRESSURE REGULATOR
Install the return pipe with 2 new gaskets and the union bolt.
Torque: 27 N·m (280 kgf·cm, 20 ft·lbf)

3. CONNECT VACUUM SENSING HOSE TO FUEL PRESSURE REGULATOR

4. INSTALL THROTTLE BODY
(See throttle body installation)

5. CHECK FOR FUEL LEAKS
(See item 5 in fuel system in precaution)

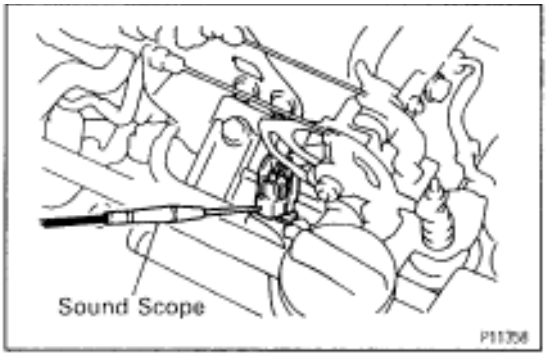

INJECTOR
ON–VEHICLE INSPECTION

1. INSPECT INJECTOR OPERATION

Check operation sound from each injector.

(a) With the engine running or cranking, use a sound scope to check that there is normal operating noise in proportion to engine speed.

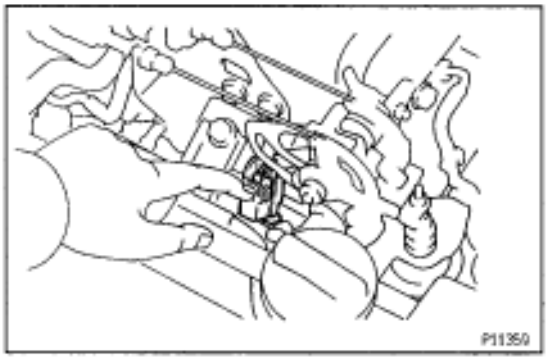

(b) If you have no sound scope, you can check the injector transmission operation with your finger.
If no sound is heard or unusual vibration is felt, check the wiring connector, injector or injection signal from the ECM.

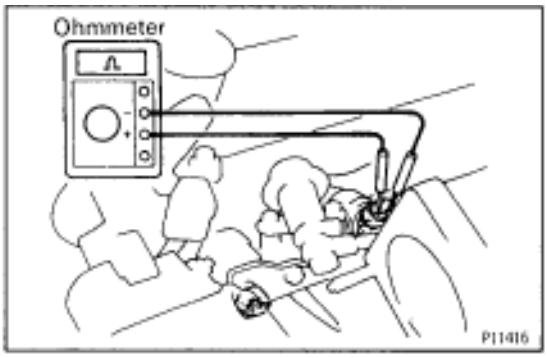

2. INSPECT INJECTOR RESISTANCE

(a) Disconnect the throttle body without disconnecting the water bypass hoses from the air intake chamber.
(See throttle body removal)

(b) Disconnect the 6 injector connectors.

(c) Using an ohmmeter, measure the resistance between the injector terminals.
Resistance:
At 20˚C (68˚F) Approx. 1.95 Ω
If the resistance is not as specified, replace the injector.

(d) Reconnect the 6 injector connectors.

(e) Reinstall the throttle body to the air intake chamber.
(See throttle body installation)

COMPONENTS FOR REMOVAL AND INSTALLATION

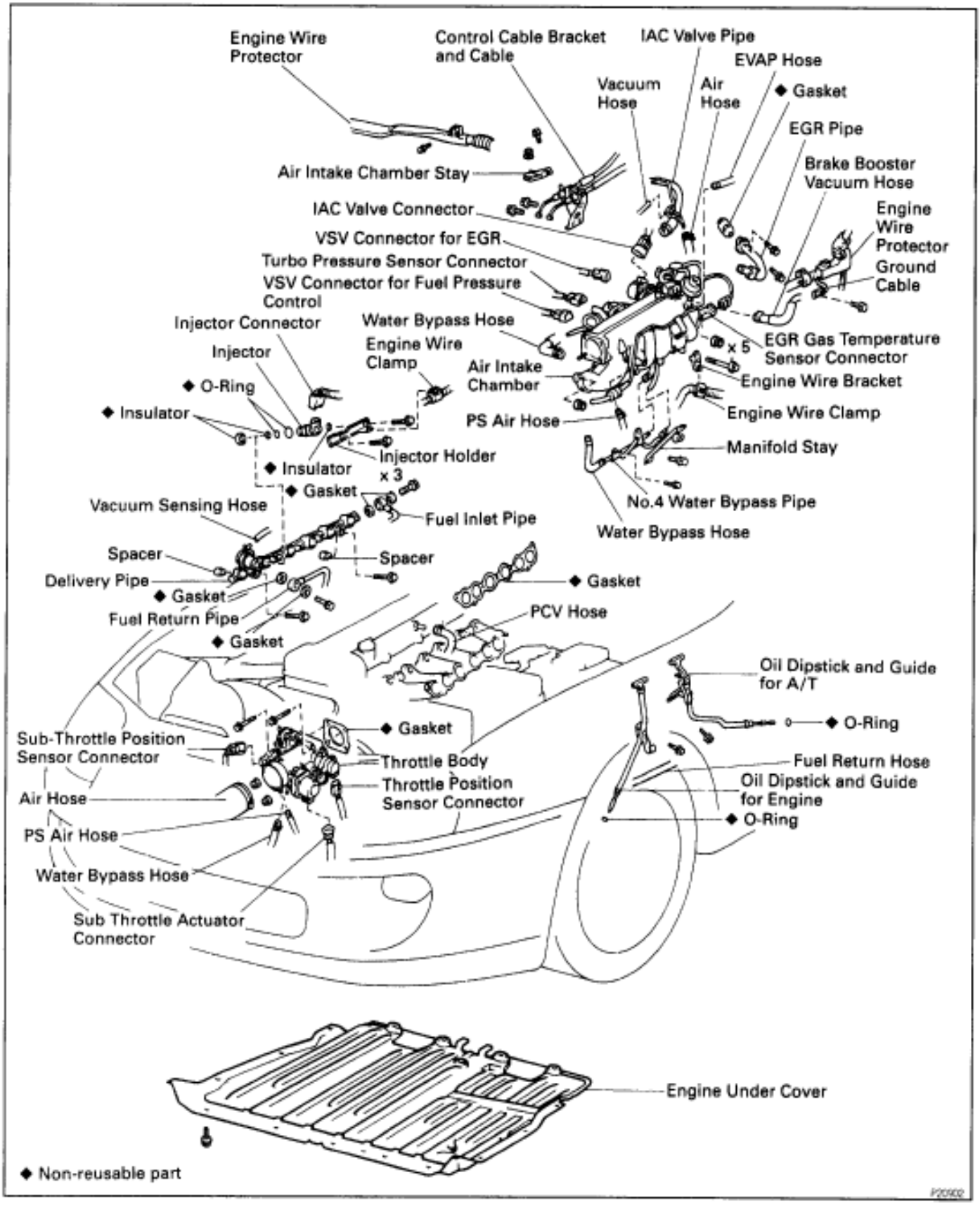

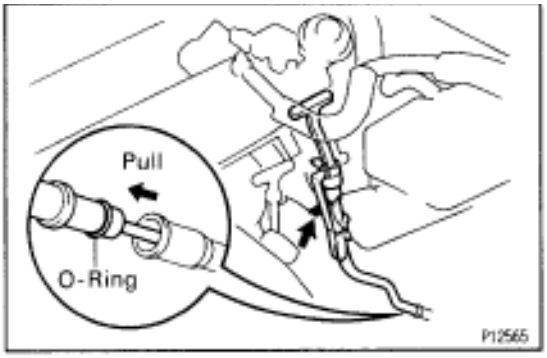

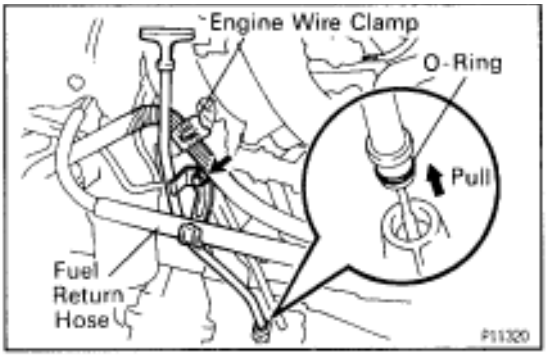

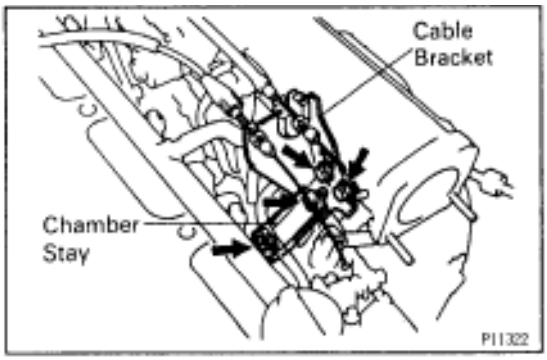

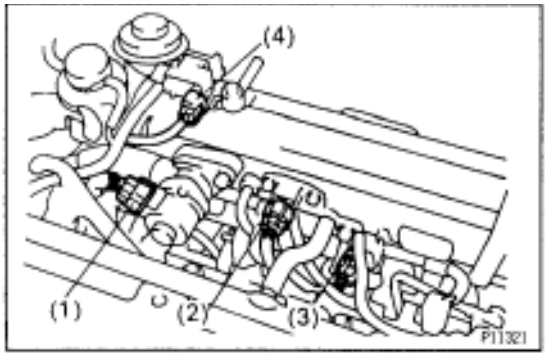

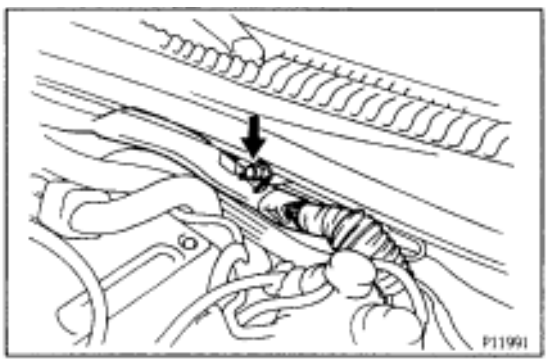

INJECTORS REMOVAL

Installation is in the reverse order of removal.

1. REMOVE ENGINE UNDER COVER

2. REMOVE THROTTLE BODY
(See throttle body removal)

3. REMOVE OIL DIPSTICK AND GUIDE FOR A/T

(a) Remove the bolt.

(b) Pull out the dipstick guide together with the dipstick.
INSTALLATION HINT: Apply soapy water to the O–ring, and push in the dipstick guide.

(c) Remove the O–ring from the dipstick guide.
INSTALLATION HINT: Use a new O–ring.

4. REMOVE OIL DIPSTICK AND GUIDE FOR ENGINE

(a) Disconnect the fuel return hose from the clamp of the dipstick guide.

(b) Remove the bolt.

(c) Pull out the dipstick guide together with the dipstick.
INSTALLATION HINT: Apply soapy water to the O–ring, and push in the dipstick guide.

(d) Remove the O–ring from the dipstick guide.
INSTALLATION HINT: Use a new O–ring.

5. REMOVE AIR INTAKE CHAMBER STAY

Remove the bolt, nut and chamber stay.
Torque: 19 N·m (195 kgf·cm, 14 ft·lbf)

6. DISCONNECT CONTROL CABLE BRACKET FROM AIR INTAKE CHAMBER

Remove the 2 bolts, and disconnect the cable bracket from the air intake chamber.
Torque: 19 N·m (195 kgf·cm, 14 ft·lbf)

7. DISCONNECT CONNECTORS AND HOSES

(a) Disconnect these connectors:
(1) IAC valve connector
(2) Turbo pressure sensor connector
(3) VSV connector for fuel pressure control
(4) VSV connector for EGR

(b) Remove the bolt, and disconnect the engine wire protector from the body.

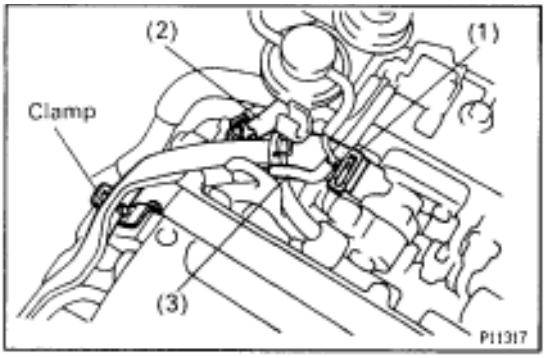

(c) Disconnect these hoses:
(1) Air hose from IAC valve
Disconnect the IAC valve pipe from the clamp on the cylinder head cover, and disconnect the air hose from the IAC valve.
(2) Air hose (from air intake chamber) from vacuum pipe on IAC valve pipe
(3) Air hose for EGR from valve pipe

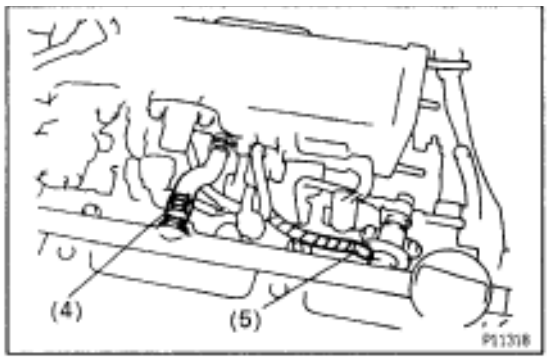

(4) PCV hose from PCV valve
(5) Vacuum sensing hose from fuel pressure regulator

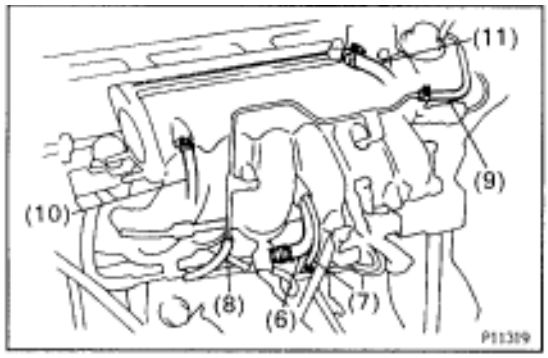

(6) Water bypass hose (from IAC valve) from No.4 water bypass pipe
(7) EVAP hose (from air intake chamber) from vacuum pipe on manifold stay
(8) EVAP hose (from vacuum pipe on No.4 water bypass pipe) from No.2 vacuum pipe
(9) EVAP hose (from charcoal canister) from No.2 vacuum pipe
(10) PS air hose from air intake chamber
(11) Brake booster vacuum hose from union on air intake chamber

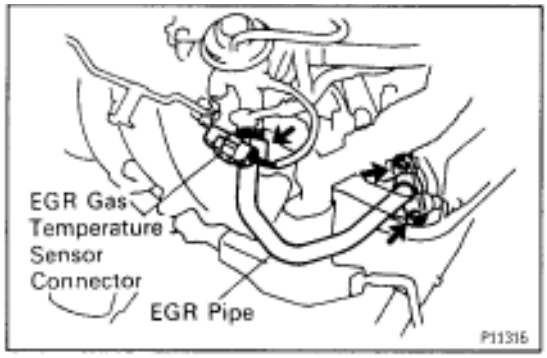

8. DISCONNECT EGR GAS TEMPERATURE SENSOR CONNECTOR

(a) Disconnect the connector from the No.2 vacuum pipe.
(b) Disconnect the sensor connector from the wiring connector.

9. REMOVE EGR PIPE

(a) Remove the union bolt holding the EGR pipe to the EGR valve.
Torque: 64 N·m (650 kgf·cm, 47 ft·lbf)
(b) Remove the 2 bolts, EGR pipe and gasket.
INSTALLATION HINT: Use a new gasket.
Torque: 27 N·m (270 kgf·cm, 20 ft·lbf)

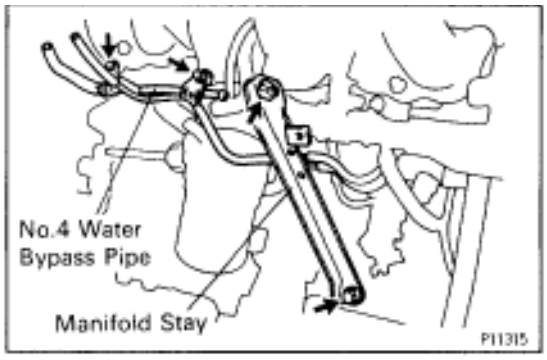

10. REMOVE NO.4 WATER BYPASS PIPE
Remove the 2 bolts and water bypass pipe.

11. REMOVE MANIFOLD STAY
Remove the 2 bolts and manifold stay.
Torque: 39 N·m (400 kgf·cm, 29 ft·lbf)

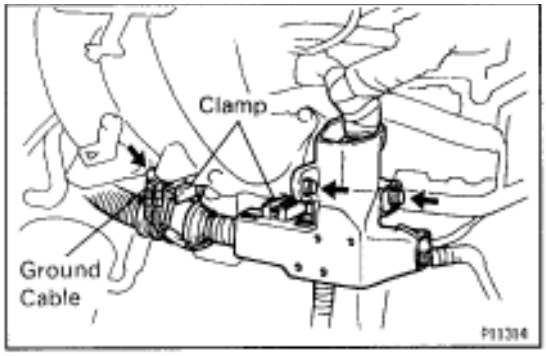

12. REMOVE AIR INTAKE CHAMBER ASSEMBLY

(a) Remove the bolt, and disconnect the ground cable from the intake manifold.

(b) Remove the 2 bolts holding the engine wire protector to the intake manifold.

(c) Disconnect the 2 clamps of the engine wire protector from the brackets.

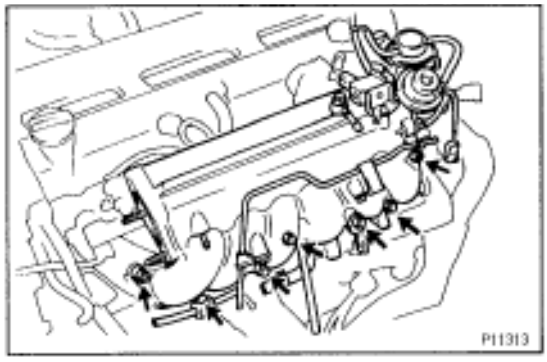

(d) Remove the 5 bolts, 2 nuts and engine wire bracket, and disconnect the air intake chamber assembly from the intake manifold.

INSTALLATION HINT: Uniformly tighten the bolts and nuts in several passes.

Torque: 27 N·m (280 kgf·cm, 20 ft·lbf)

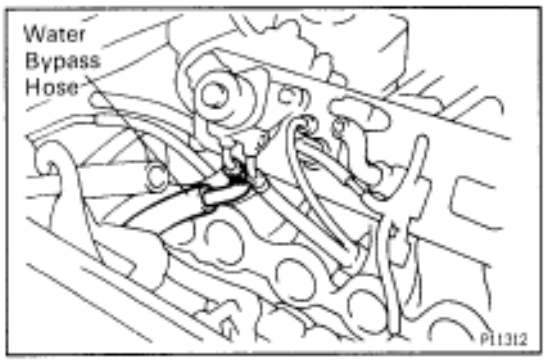

(e) Disconnect the water bypass hose from the IAC valve.

(f) Remove the gasket.

INSTALLATION HINT: Use a new gasket.

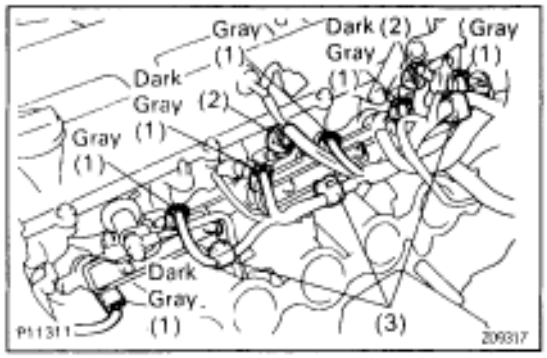

13. DISCONNECT WIRE CLAMPS AND CONNECTORS

Disconnect these connectors and clamps:

(1) 6 injectors connectors

INSTALLATION HINT: The No.1, No.3 and No.5 injector connectors are dark gray, and the No.2, No.4 and No.6 injector connectors are gray.

(2) 2 camshaft position sensor connectors

(3) 3 engine wire clamps from injector holders

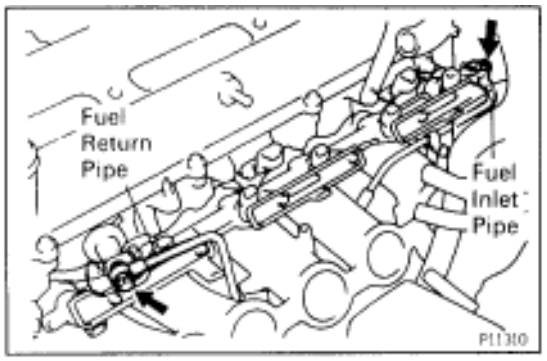

14. DISCONNECT FUEL INLET PIPE FROM DELIVERY PIPE

Remove the union bolt and 2 gaskets, and disconnect the inlet pipe from the delivery pipe.

INSTALLATION HINT: Use 2 new gaskets.

Torque: 41 N·m (420 kgf·cm, 30 ft·lbf)

CAUTION:

- **Put a shop towel under the delivery pipe.**
- **Slowly loosen the union bolt.**

15. DISCONNECT FUEL RETURN PIPE FROM FUEL PRESSURE REGULATOR

Remove the union bolt and 2 gaskets, and disconnect the fuel pipe from the pressure regulator.

INSTALLATION HINT: Use 2 new gaskets.

Torque: 27 N·m (280 kgf·cm, 20 ft·lbf)

CAUTION:

- **Put a shop towel under the pressure regulator.**
- **Slowly loosen the union bolt.**

16. REMOVE DELIVERY PIPE AND INJECTORS

(a) Remove the 6 bolts and 3 injector holders.

Torque: 7.8 N·m (80 kgf·cm, 69 in.·lbf)

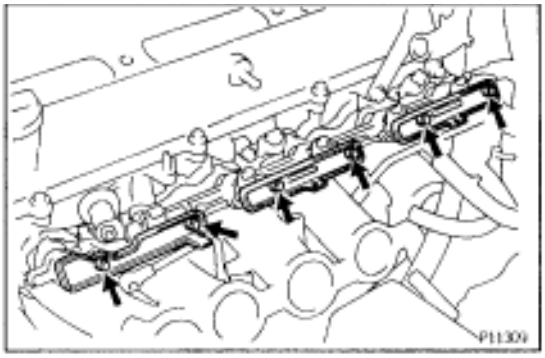

(b) Remove the 6 insulators from the injectors.

INSTALLATION HINT: Use 6 new insulators.

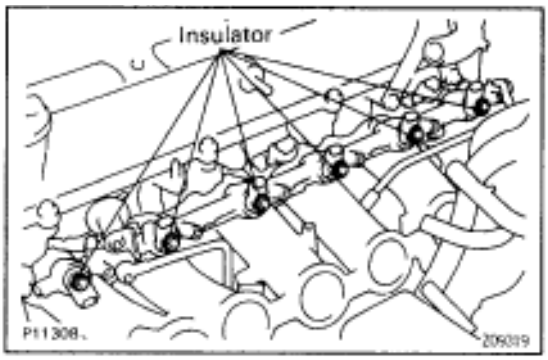

(c) Remove the 2 bolts, the delivery pipe and 6 injectors assembly.

Torque: 21 N·m (210 kgf·cm, 15 ft·lbf)

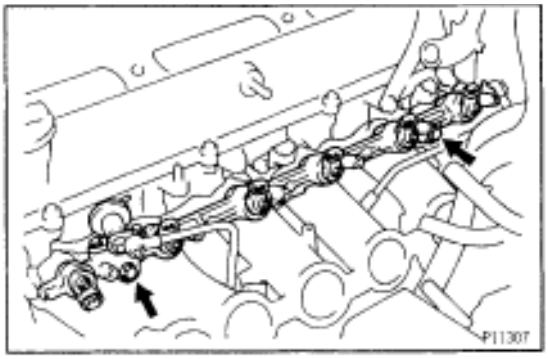

(d) Remove the 2 spacers from the intake manifold.

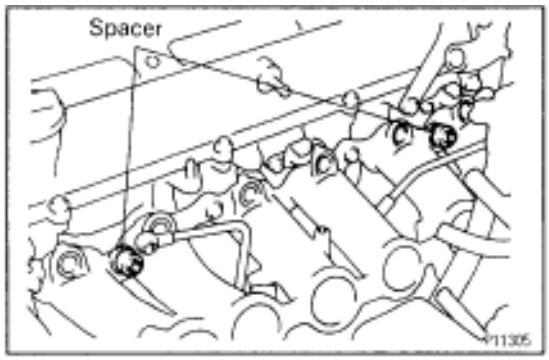

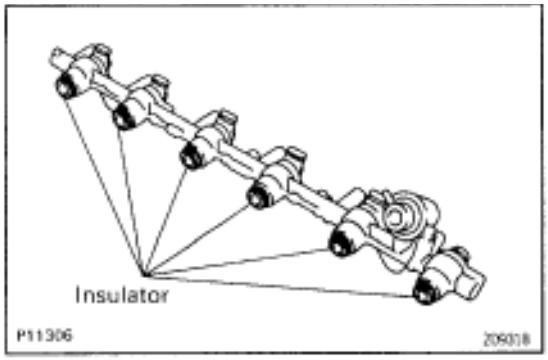

(e) Remove the 6 insulators from the delivery pipe.
INSTALLATION HINT: Use 6 new insulators.

INJECTORS INSPECTION

1. INSPECT INJECTOR INJECTION

CAUTION: Keep injector clear of sparks during the test.

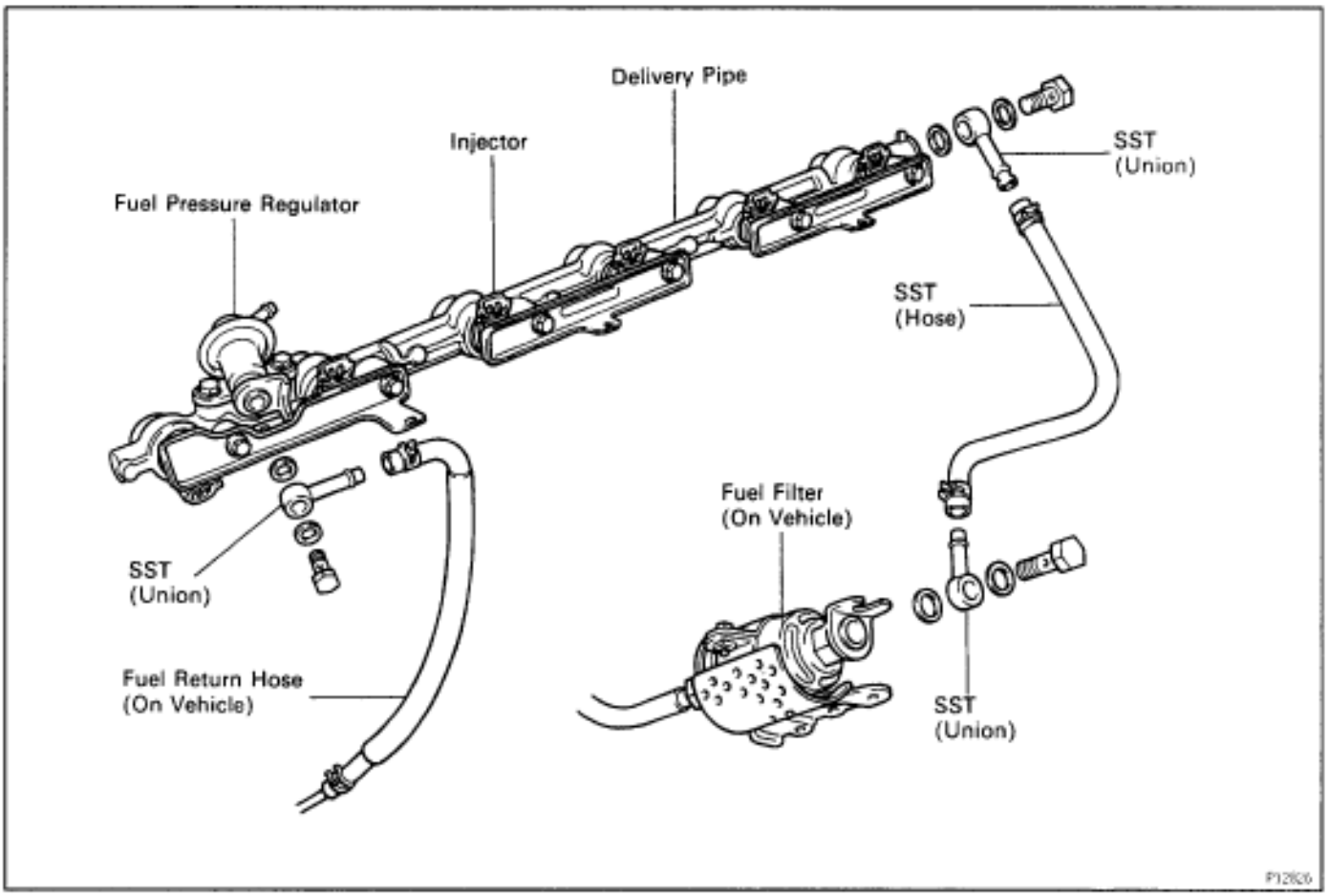

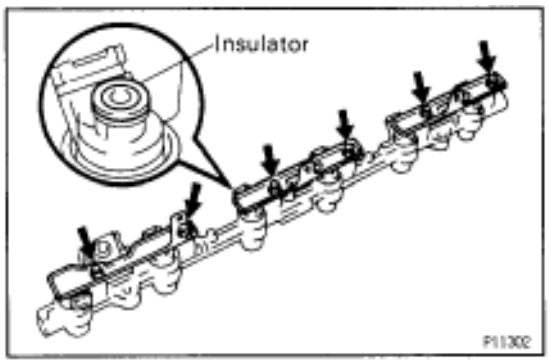

(a) Install the insulator to each injector.
(b) Install the 3 injector holders with the 6 bolts.
Torque: 7.8 N·m (80 kgf·cm, 69 in.·lbf)

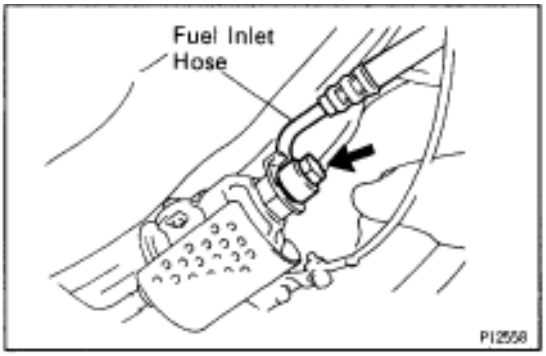

(c) Remove the union bolt and 2 gaskets, and disconnect the fuel inlet hose from the fuel filter outlet.

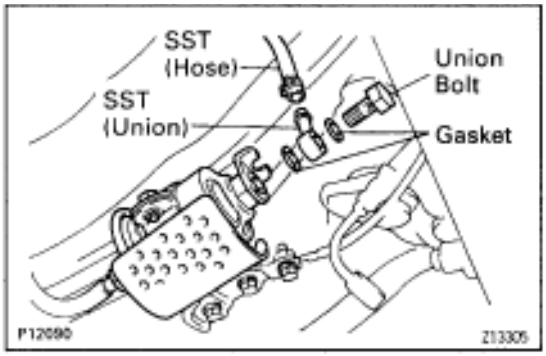

(d) Connect SST (hose) to the fuel filter outlet with SST (union), the 2 gaskets and union bolt.
SST 09268–41045 (90405–09015)
Torque: 29 N·m (300 kgf·cm, 22 ft·lbf)

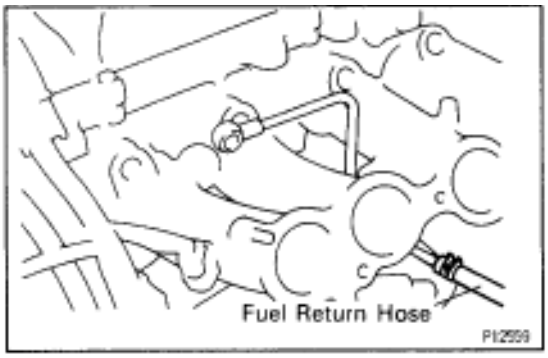

(e) Disconnect the fuel return hose from the fuel return pipe.

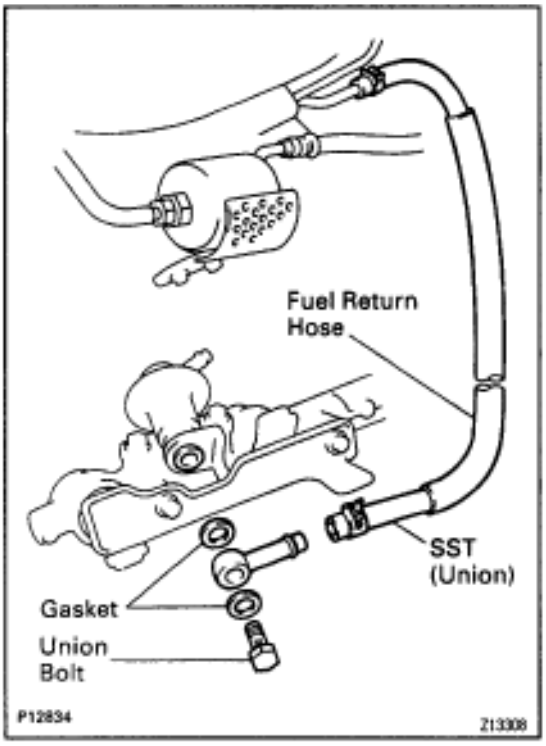

(f) Connect the fuel return hose to the fuel outlet of the pressure regulator on the delivery pipe with SST (union), the 2 gaskets and union bolt.
SST 09268–41045 (09268–41070)

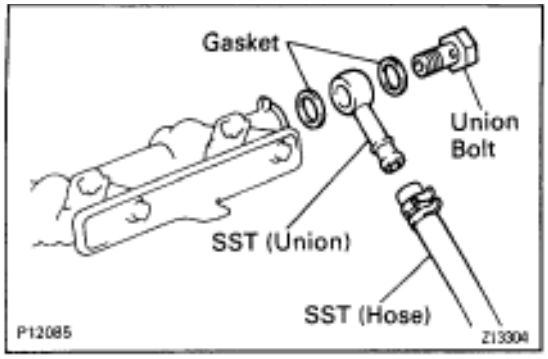

(g) Connect SST (hose) to the fuel inlet of the delivery pipe with SST (union), the 2 gaskets and union bolt.
SST 09268–41045 (90405–09015)
(h) Put the injector into the graduated cylinder.

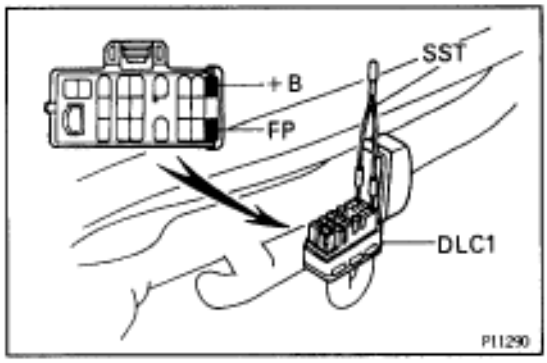

(i) Using SST, connect terminals +B and FP of the DLC 1.
SST 09843–18020
(j) Reconnect the negative (–) terminal cable to the battery.
(k) Turn the ignition switch ON.
NOTICE: Do not start the engine.

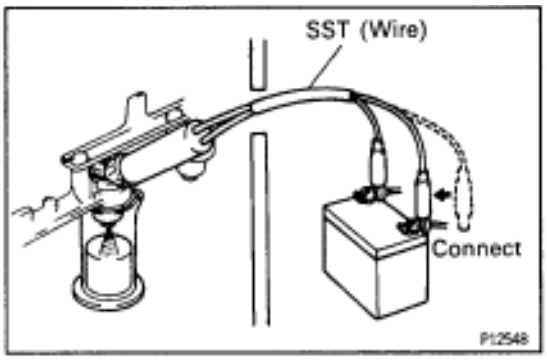

(l) Connect SST (wire) to the injector and battery for 15 seconds, and measure the injection volume with a graduated cylinder. Test each injector 2 or 3 times.
SST 09842–30060
Injection volume:
124–144 cm^3 (7.6–8.8 cu in.) per 15 sec.
Difference between each injector:
10 cm^3 (0.6 cu in.) or less
If the injection volume is not as specified, replace the injector.

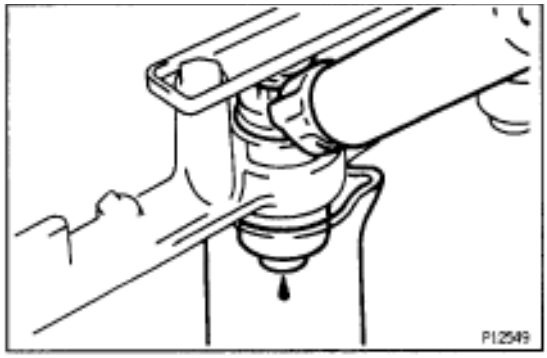

2. INSPECT LEAKAGE
(a) In the condition above, disconnect the tester probes of SST (wire) from the battery and check the fuel leakage from the injector.
SST 09842–30060
Fuel drop:
One drop or less per minute
(b) Disconnect the negative (–) terminal cable from the battery.
(c) Remove the SST.
SST 09268–41045 and 09843–18020
(d) Reconnect the fuel inlet hose to the fuel filter with 2 new gaskets and the union bolt.
Torque: 29 N·m (300 kgf·cm, 22 ft·lbf)
(e) Reconnect the fuel return hose to the fuel return pipe.
(f) Remove the 6 bolts, 3 injector holders and 6 insulators.

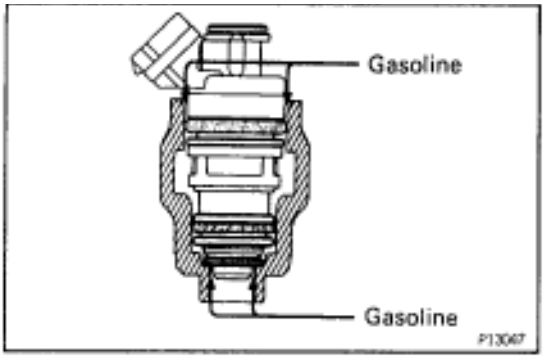

INJECTORS REPLACEMENT

1. REMOVE INJECTORS

(a) Apply gasoline between the delivery pipe and injectors.

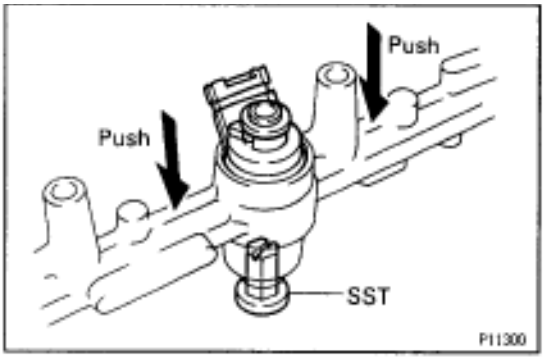

(b) Using SST, lift up the 6 injectors.
SST 09268–74010

(c) Remove the insulator and 2 O–rings from each injector.

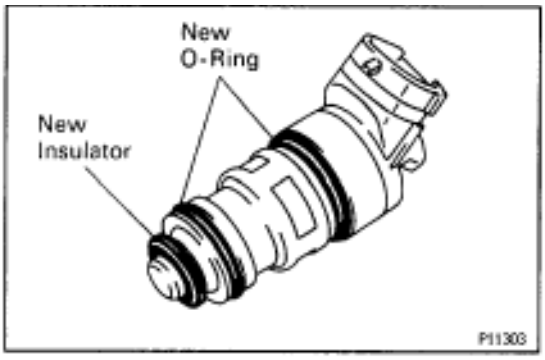

2. REINSTALL INJECTORS

(a) Apply a light coat of gasoline to 2 new O–rings.

(b) Install the 2 O–rings and new insulator to each injector.

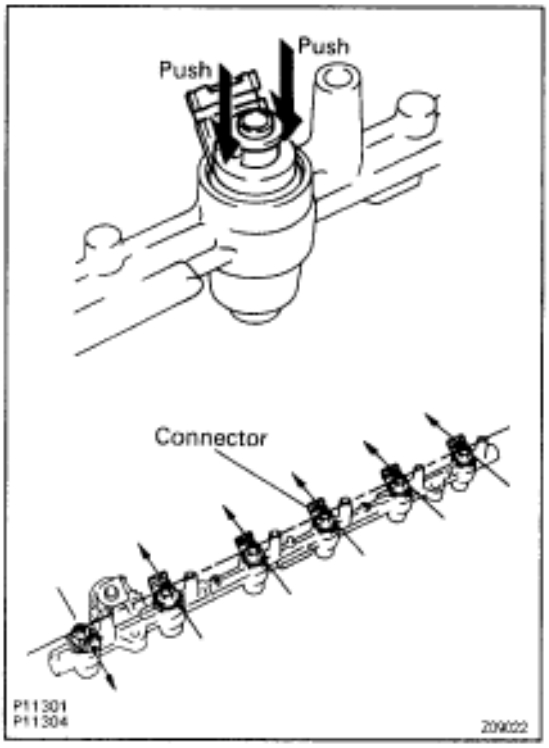

(c) Push in the 6 injectors so that the injector connectors are positioned as shown in the illustration.

FUEL PRESSURE PULSATION DAMPER COMPONENTS FOR REMOVAL AND INSTALLATION

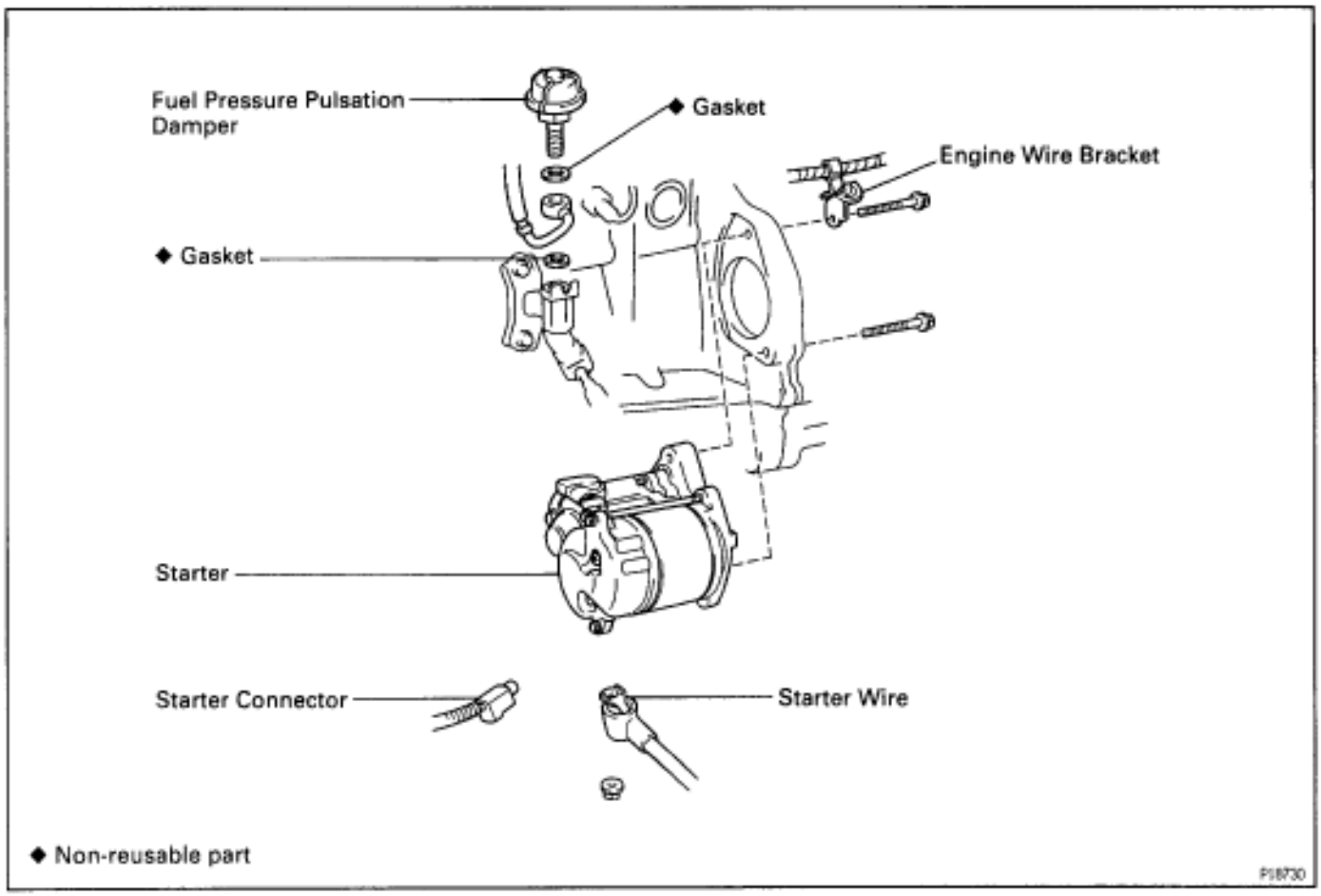

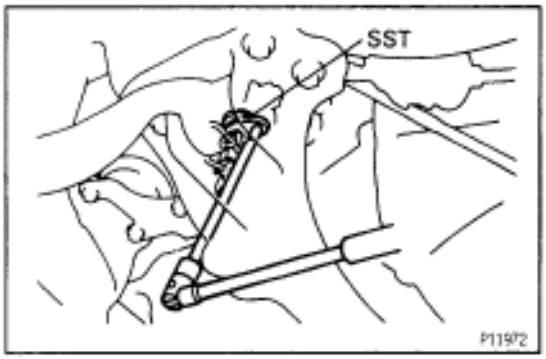

FUEL PRESSURE PULSATION DAMPER REMOVAL

1. REMOVE STARTER
(See starter removal in Starting System)

2. REMOVE FUEL PRESSURE PULSATION DAMPER

(a) Remove the pulsation damper and upper gasket.

(b) Disconnect the fuel inlet pipe from the fuel pipe support, and remove the lower gasket.

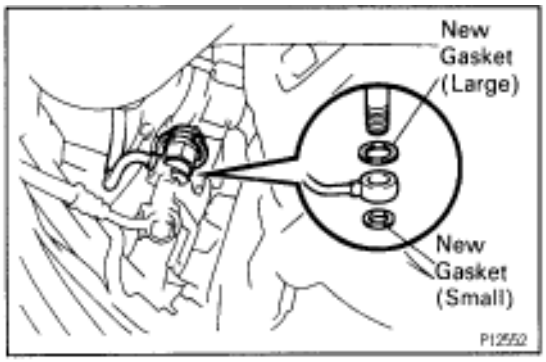

FUEL PRESSURE PULSATION DAMPER INSTALLATION

1. INSTALL FUEL PRESSURE PULSATION DAMPER

(a) Install the fuel inlet pipe and pulsation damper with 2 new gaskets.

HINT: Different sized gaskets are used for the upper (large size) and lower (small size).

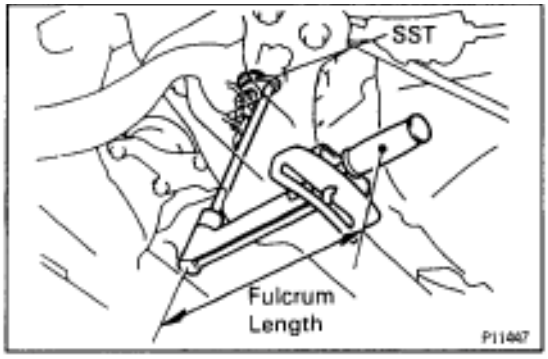

(b) Using SST, tighten the pulsation damper.
SST 09612–24014 (09617–24011)
Torque:
41 N·m (420 kgf·cm, 30 ft·lbf)
35 N·m (350 kgf·cm, 25 ft·lbf) for SST
HINT: Use a torque wrench with a fulcrum length of 30 cm (11.81 in.).

2. INSTALL STARTER
(See starter installation in Starting System)

4. CHECK FOR FUEL LEAKS
(See item 5 in fuel system in precaution)

FUEL TANK AND LINE COMPONENTS

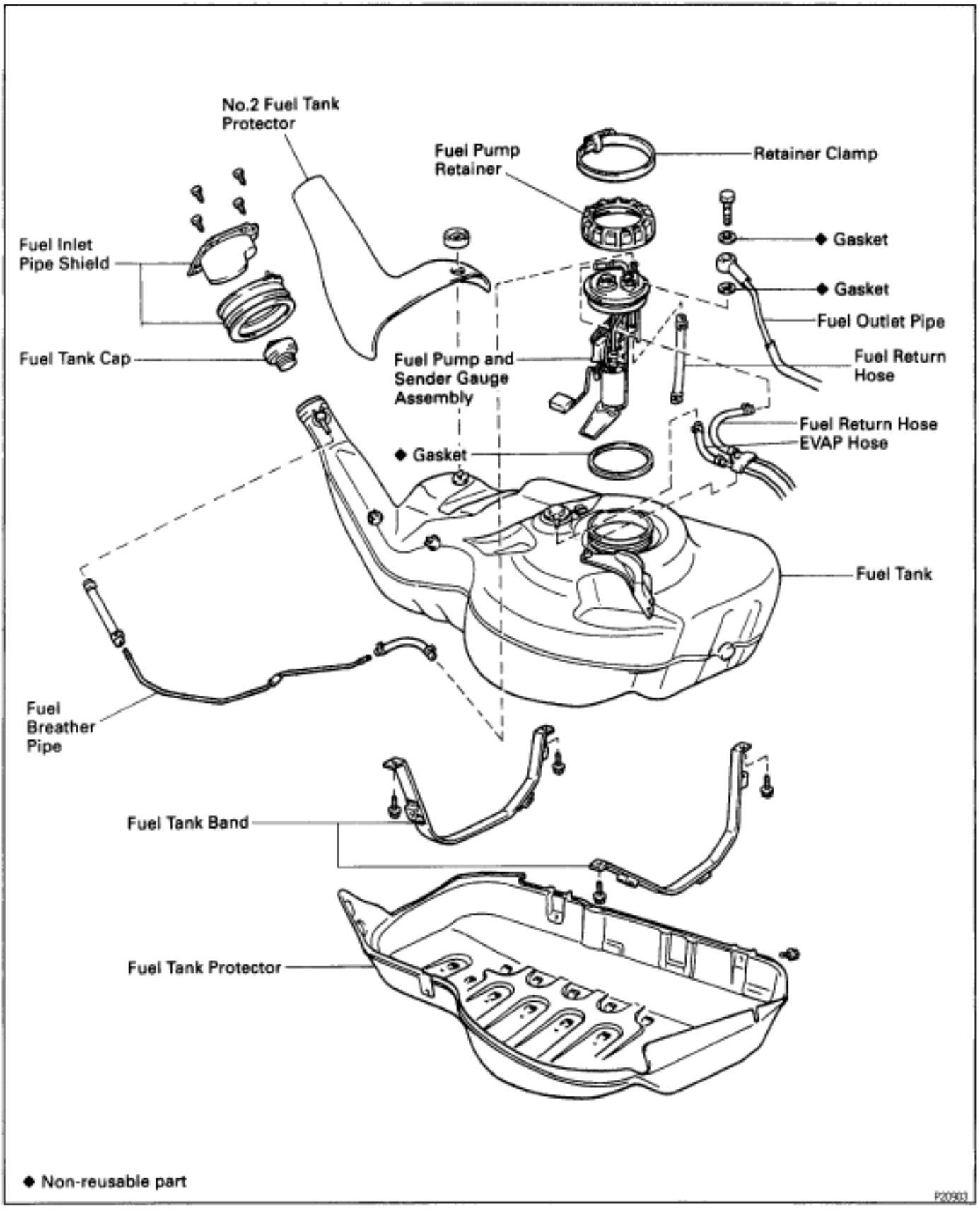

PRECAUTIONS

1. **Always use new gaskets when replacing the fuel tank or component parts.**
2. **Apply the proper torque to all parts tightened.**

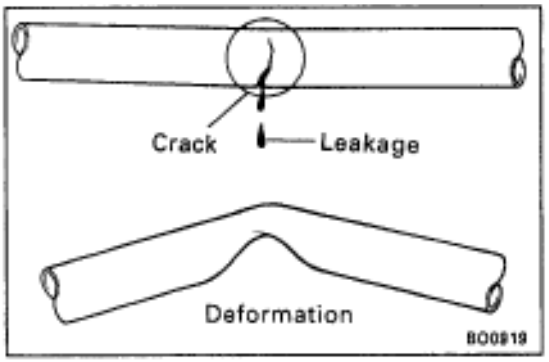

FUEL LINES AND CONNECTIONS INSPECTION

(a) Check the fuel lines for cracks or leakage, and all connections for deformation.

(b) Check the fuel tank vapor vent system hoses and connections for looseness, sharp bends or damage.

(c) Check the fuel tank for deformation, cracks, fuel leakage or tank band looseness.

(d) Check the filler neck for damage or fuel leakage.

(e) Hose and tube connections are as shown in the illustration. If a problem is found, repair or replace the part as necessary.

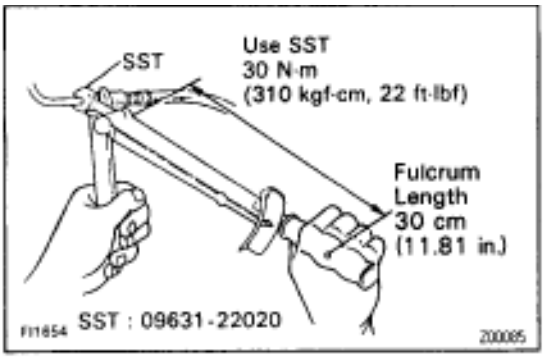

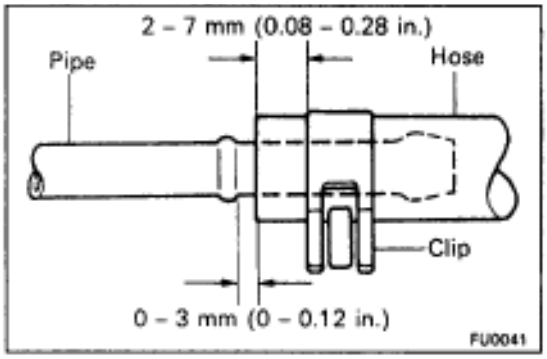

MAS AIR FLOW (MAF) METER COMPONENTS FOR REMOVAL AND INSTALLATION

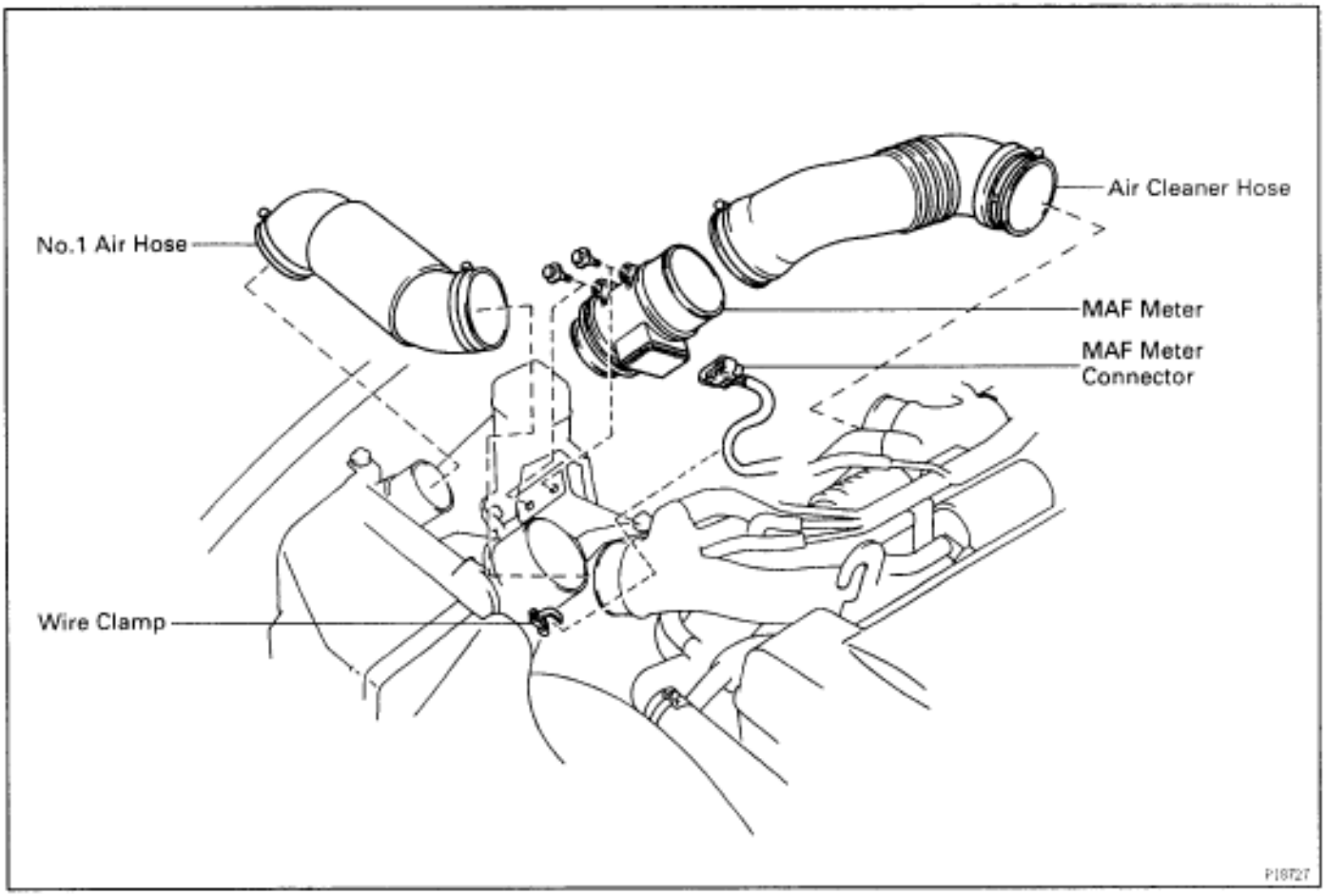

MAF METER REMOVAL

Installation is in the reverse order of removal.

1. **REMOVE NO.1 AIR HOSE**
2. **REMOVE AIR CLEANER HOSE**

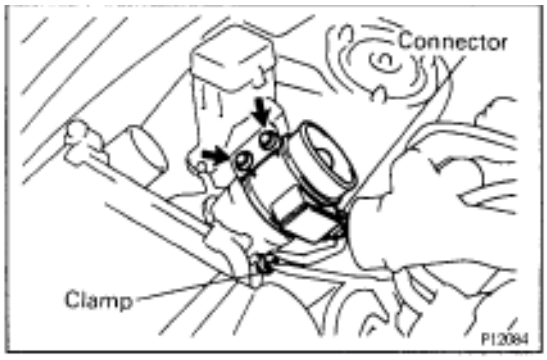

3. **REMOVE MAF METER**

(a) Remove the 2 bolts, and disconnect the MAF meter from the air cleaner case.
Torque: 6.9 N·m (70 kgf·cm, 61 in.·lbf)

(b) Disconnect the MAF meter wire from the wire clamp on the air cleaner case.

(c) Disconnect the MAF meter connector, and remove the MAF meter.

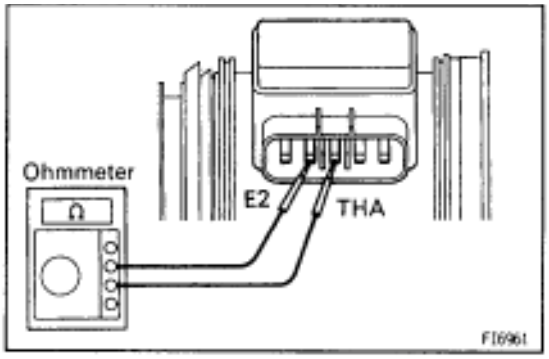

MAF METER INSPECTION

1. INSPECT MAF METER RESISTANCE

Using an ohmmeter, measure the resistance between terminals THA and E2.

Between terminals	Resistance	Temperature
THA–E2	10–20 kΩ	–20˚C (–4˚F)
THA–E2	4–7 kΩ	0˚C (32˚F)
THA–E2	2–3 kΩ	20˚C (68˚F)
THA–E2	0.9–1.3 kΩ	40˚C (104˚F)
THA–E2	0.4–0.7 kΩ	60˚C (140˚F)

If the resistance is not as specified, replace the MAF meter.

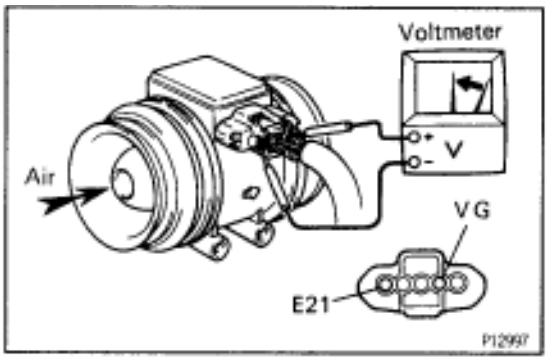

2. INSPECT MAF METER OPERATION

(a) Connect the MAF meter connector.
(b) Connect the negative (–) terminal cable to the battery.
(c) Using a voltmeter, connect the positive (+) tester probe to terminal VG, and negative (–) tester probe to terminal E21.
(d) Turn the ignition switch ON.
(e) Blow air into the MAF meter, and check that the voltage fluctuates.
If operation is not as specified, replace the MAF meter.
(f) Turn the ignition switch OFF.
(g) Disconnect the negative (–) terminal cable from the battery.
(h) Disconnect the MAF meter connector.

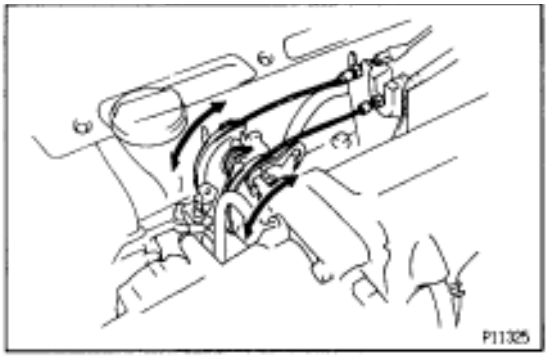

THROTTLE BODY
ON–VEHICLE INSPECTION
Throttle Body

INSPECT THROTTLE BODY

(a) Check that the throttle linkage moves smoothly.

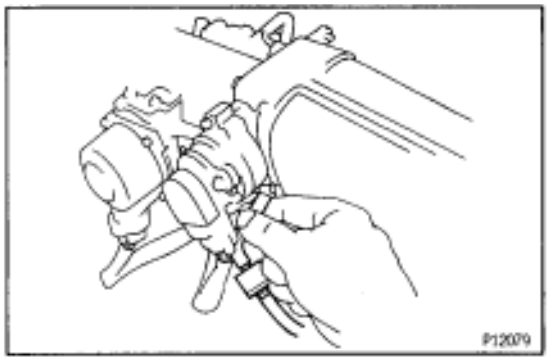

(b) Check the vacuum at the purge port.
- Start the engine.
- Check the vacuum with your finger.

Port name	At idle	At 3,000 rpm
Purge	No vacuum	Vacuum

Dashpot

1. WARM UP ENGINE

Allow the engine to warm up to normal operating temperature.

2. CHECK IDLE SPEED

Idle speed (Transmission in neutral position):

650 ± 50 rpm

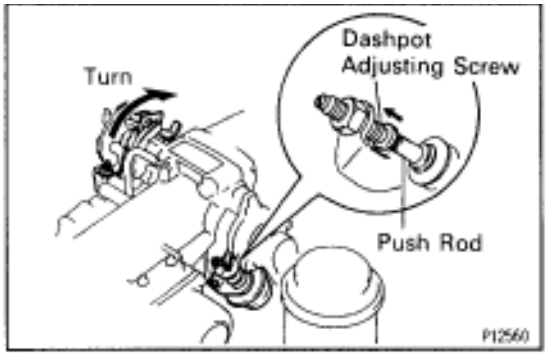

3. CHECK AND ADJUST DASHPOT SETTING SPEED

(a) Disconnect the control cables from the throttle body.

(b) Turn the throttle linkage until the dashpot adjusting screw starts to separate from the push rod. Then keep the throttle linkage at that position.

(c) Check that the dashpot is set.

Dashpot setting speed:

2,300 ± 400 rpm

(d) Reconnect the control cables to the throttle body.

4. CHECK VTV OPERATION

(a) Maintain the engine speed at 3,500 rpm.

(b) Release the throttle valve, and check that the engine returns to idle in a few seconds.

Throttle Opener

1. WARM UP ENGINE

Allow the engine to warm up to normal operating temperature.

2. CHECK IDLE SPEED

Idle speed (Transmission in neutral position):

650 ± 50 rpm

3. CHECK THROTTLE OPENER SETTING SPEED

(a) Disconnect the throttle opener vacuum hose from the throttle body, and plug the throttle body port.

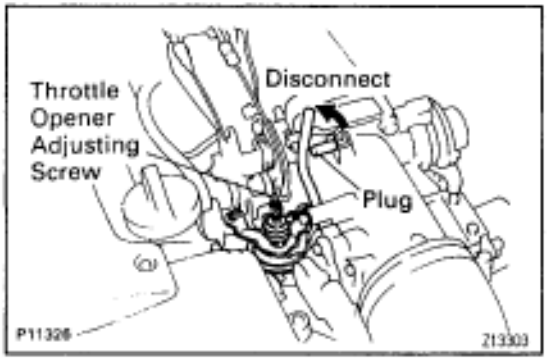

(b) Maintain the engine speed at 2,500 rpm.

(c) Release the throttle valve.

(d) Check that the throttle opener is set.

Throttle opener setting speed:

1,500 ± 200 rpm

(e) Adjust the throttle opener setting speed by turning the throttle opener adjusting screw.

(f) Reconnect the throttle opener vacuum hose to the throttle body.

COMPONENTS FOR REMOVAL AND INSTALLATION

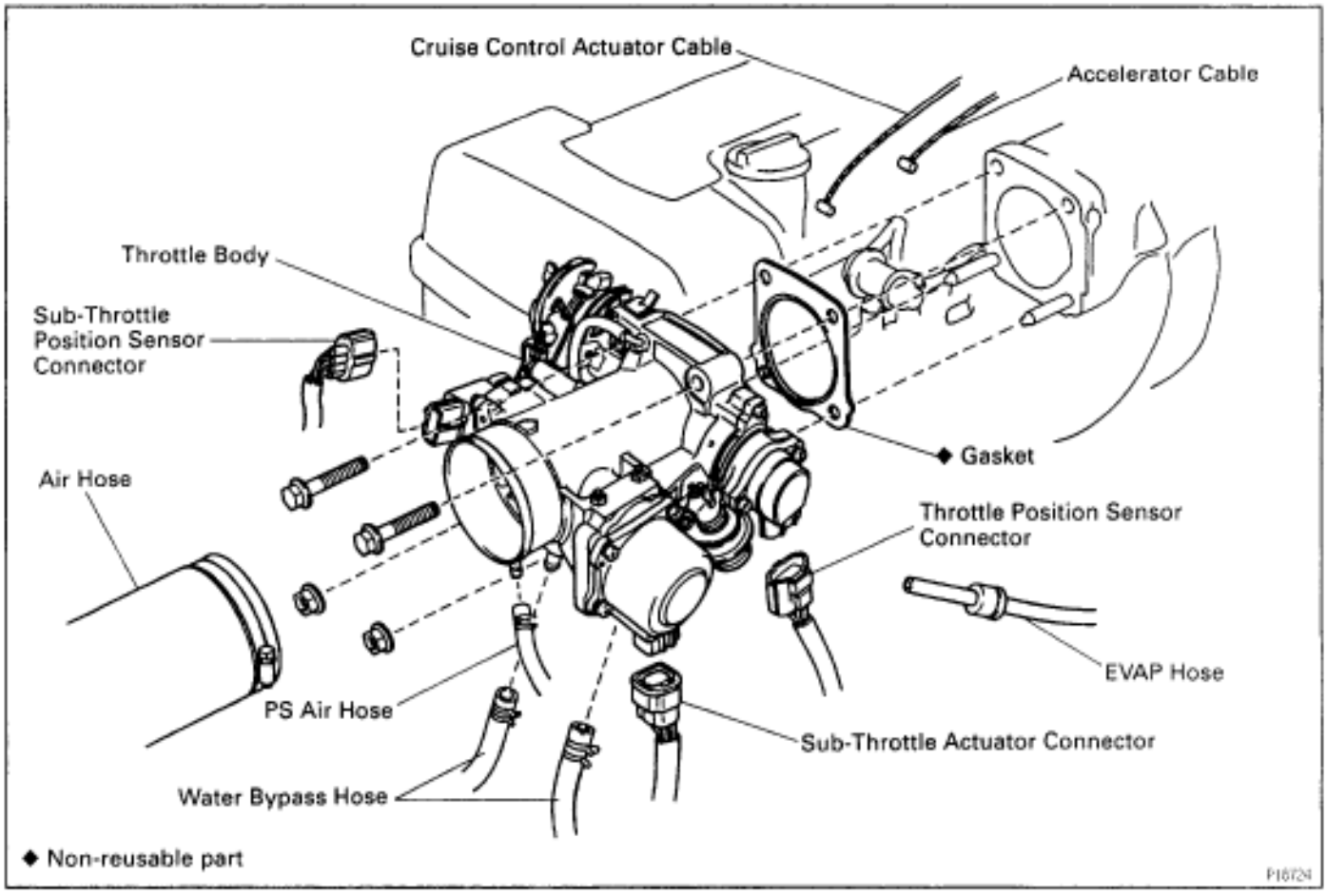

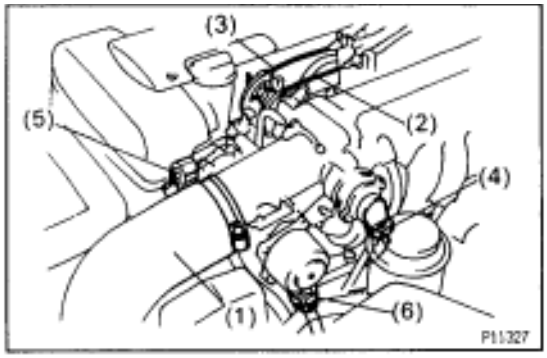

THROTTLE BODY REMOVAL

Installation is in the reverse order of removal.

1. DRAIN ENGINE COOLANT

2. REMOVE THROTTLE BODY

(a) Disconnect the hose, cables and connectors from the throttle body:
- (1) Air hose
- (2) Accelerator cable
- (3) Cruise control actuator cable
- (4) Throttle position sensor connector
- (5) Sub–throttle position sensor connector
- (6) Sub–throttle actuator connector

(b) Remove the 2 bolts and 2 nuts, and disconnect the throttle body from the air intake chamber.
Torque: 21 N·m (210 kgf·cm, 15 ft·lbf)

(c) Remove the gasket.
INSTALLATION HINT: Use a new gasket.

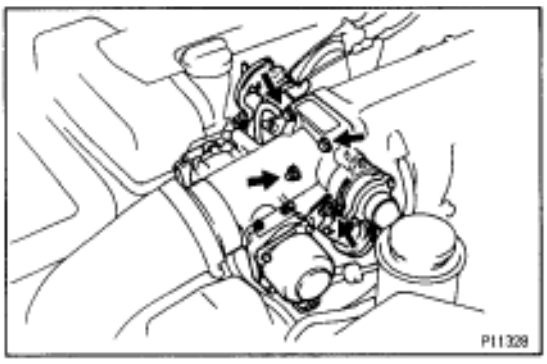

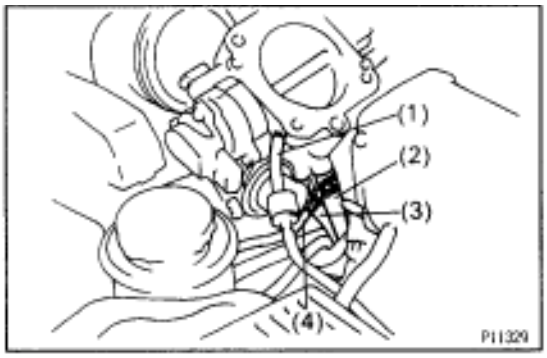

(d) Disconnect these hoses from the throttle body, and remove the throttle body:
- (1) EVAP hose
- (2) Water bypass hose (from No.4 water bypass pipe)
- (3) Water bypass hose (from cylinder head)
- (4) PS air hose

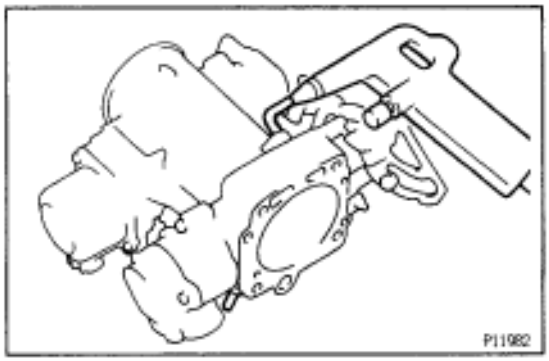

THROTTLE BODY INSPECTION
Throttle Body

1. CLEAN THROTTLE BODY

(a) Using a soft brush and carburetor cleaner, clean the cast parts.

(b) Using compressed air, clean all the passages and apertures.
NOTICE: To prevent deterioration, do not clean the throttle position sensors, actuator, dashpot and throttle opener.

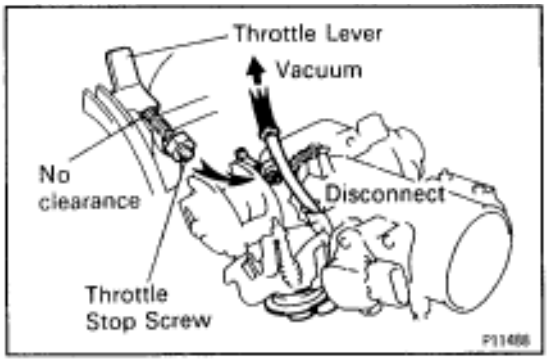

2. INSPECT THROTTLE VALVE

(a) Disconnect the throttle opener vacuum hose from the throttle body.

(b) Apply vacuum to the throttle opener.

(c) Check that there is no clearance between the throttle stop screw and throttle lever when the throttle valve is fully closed.

(d) Reconnect the vacuum hose to the throttle body.

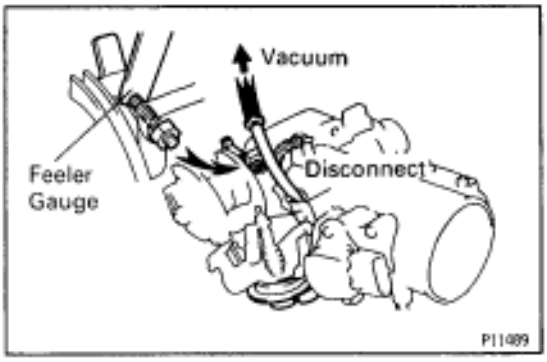

Throttle Position Sensor

1. INSPECT THROTTLE POSITION SENSOR

(a) Disconnect the throttle opener vacuum hose from the throttle body.

(b) Apply vacuum to the throttle opener.

(c) Insert a 0.54 mm (0.021 in.) or 0.70 mm (0.028 in.) feeler gauge between the throttle stop screw and stop lever.

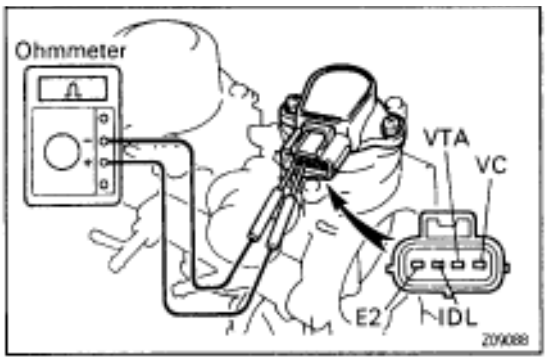

(d) Using an ohmmeter, measure the resistance between each terminal.

Clearance between lever and stop screw	Between terminals	Resistance
0 mm (0 in.)	VTA–E2	0.34–6.3 Ω
0.54 mm (0.021 in.)	IDL–E2	0.5 kΩ or less
0.70 mm (0.028 in.)	IDL–E2	Infinity
Throttle valve fully Open	VTA–E2	2.4–11.2 kΩ
–	VC–E2	3.1–7.2 kΩ

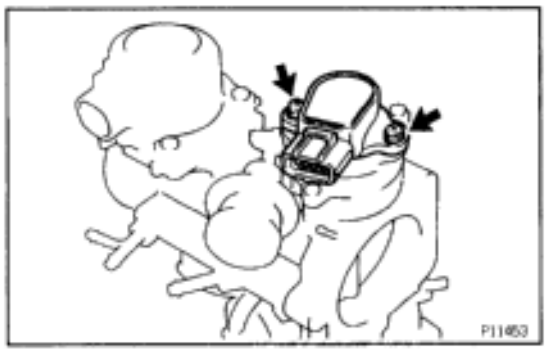

2. IF NECESSARY, ADJUST THROTTLE POSITION SENSOR

(a) Loosen the 2 set screws of the sensor.

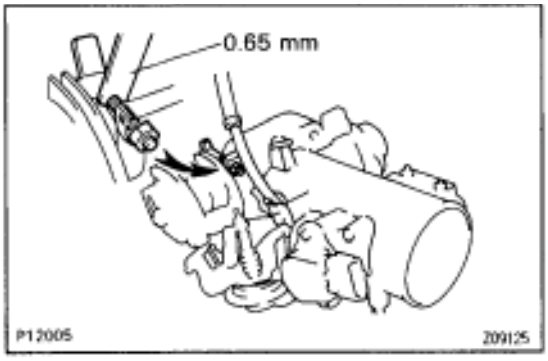

(b) Insert a 0.65 mm (0.026 in.) feeler gauge between the throttle stop screw and stop lever.

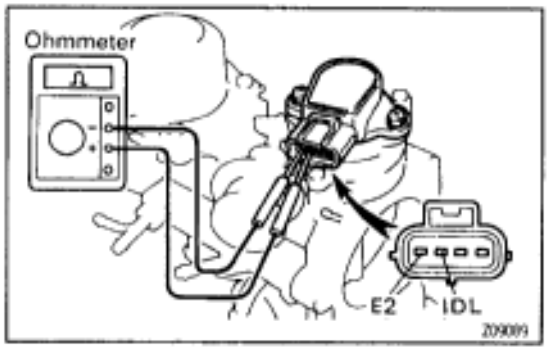

(c) Connect the tester probe of an ohmmeter to the terminals IDL and E2 of the sensor.

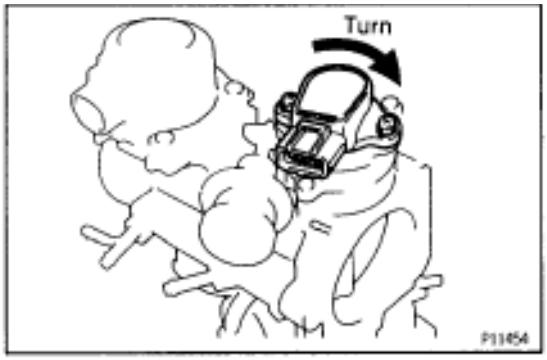

(d) Gradually turn the sensor clockwise until the ohmmeter deflects, and secure it with the 2 set screws.

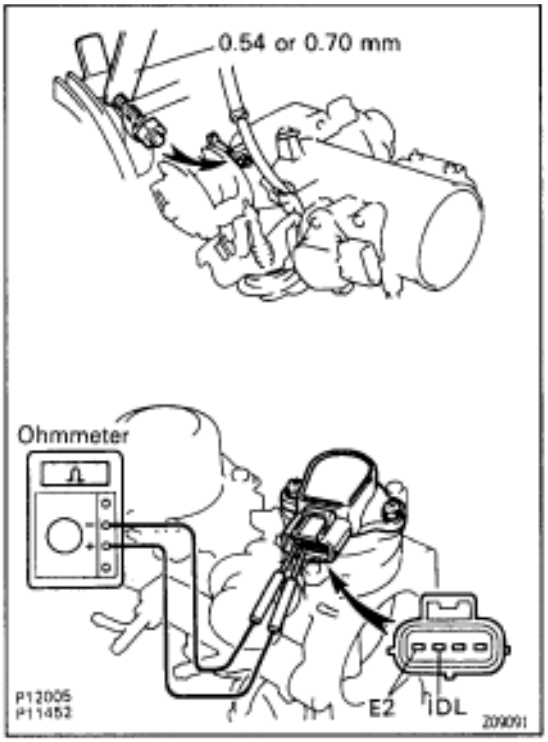

(e) Recheck the continuity between terminals IDL and E2.

Clearance between lever and stop screw	Continuity (IDL–E2)
0.54 mm (0.021 in.)	Continuity
0.70 mm (0.028 in.)	No continuity

(f) Reconnect the vacuum hose to the throttle body.

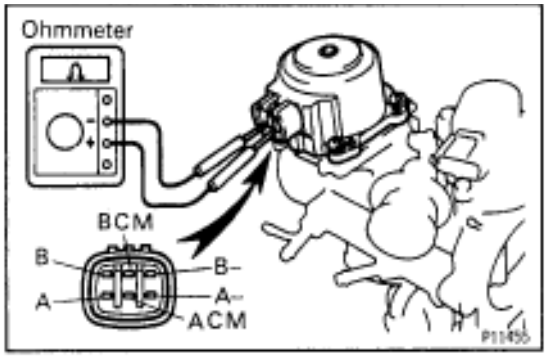

Sub–Throttle Actuator, Sub–Throttle Valve and Throttle Position Sensor

1. INSPECT SUB–THROTTLE ACTUATOR

Using an ohmmeter, measure the resistance between the terminals (ACM to A and A–, BCM to B and B–).

Resistance:

0.82–0.98 Ω at 20°C (68°F)

If the resistance is not as specified, replace the actuator.

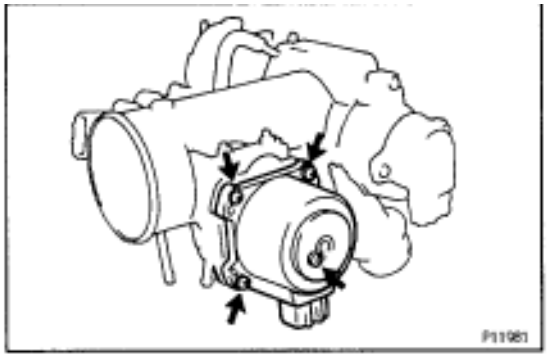

2. REMOVE SUB–THROTTLE ACTUATOR

Remove the 4 screws and sub–throttle actuator.

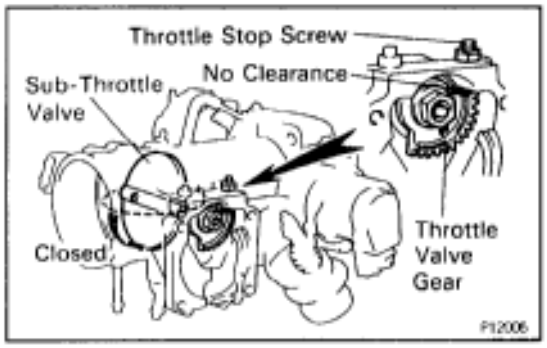

3. INSPECT SUB–THROTTLE VALVE

Check that there is no clearance between the throttle stop screw and throttle valve gear when the subthrottle valve is fully closed.

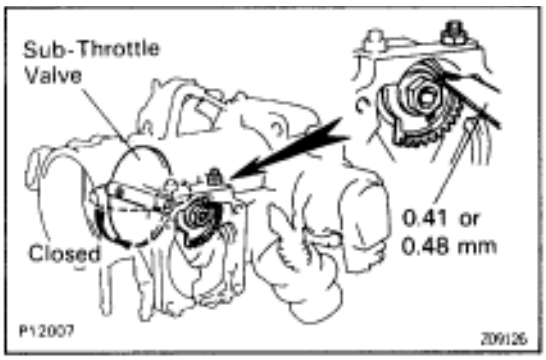

4. INSPECT SUB–THROTTLE POSITION SENSOR

(a) Set the sub–throttle valve to fully closed position.

(b) Insert a 0.41 mm (0.016 in.) or 0.48 mm (0.019 in.) feeler gauge between the throttle stop screw and throttle valve gear.

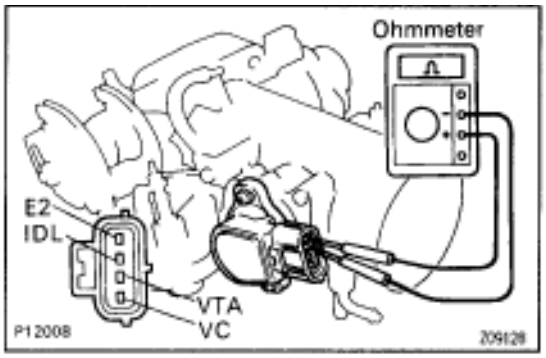

(c) Using an ohmmeter, measure the resistance between terminals.

Clearance between lever and stop screw	Between terminals	Resistance
0 mm (0 in.)	VTA–E2	0.3–6.3 kΩ
0.41 mm (0.016 in.)	IDL–E2	0.5 kΩ or less
0.48 mm (0.019 in.)	IDL–E2	Infinity
Throttle valve fully open	VTA–E2	2.0–10.8 kΩ
–	VC–E2	3.5–6.5 kΩ

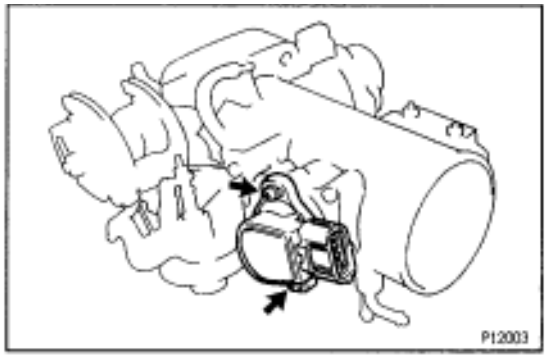

5. IF NECESSARY, ADJUST SUB–THROTTLE POSITION SENSOR

(a) Loosen the 2 set screws of the sensor.

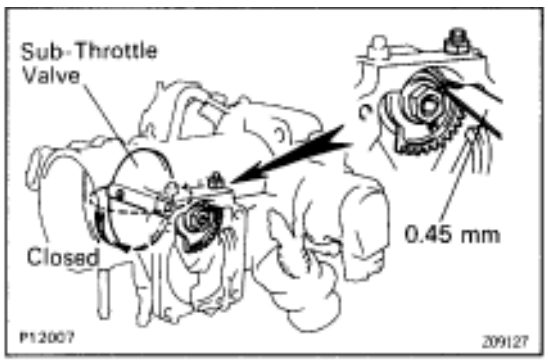

(b) Set the sub–throttle valve to fully closed position.

(c) Insert a 0.45 mm (0.018 in.) feeler gauge, between the throttle stop screw and throttle valve gear.

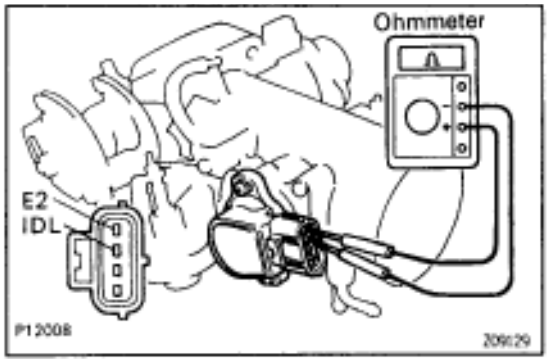

(d) Connect the tester probe of an ohmmeter to the terminals IDL and E2 of the sensor.

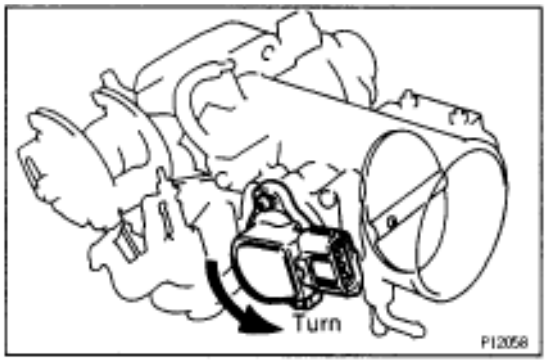

(e) Gradually turn the sensor clockwise until the ohmmeter deflects, and secure it with the 2 set screws.

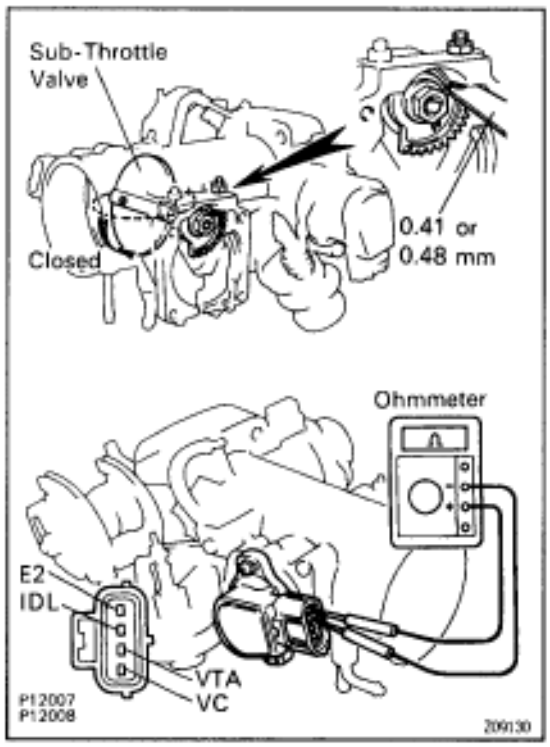

(f) Recheck the continuity between terminals IDL and E2.

Clearance between lever and stop screw	Continuity (IDL–E2)
0.41 mm (0.016 in.)	Continuity
0.48 mm (0.019 in.)	No continuity

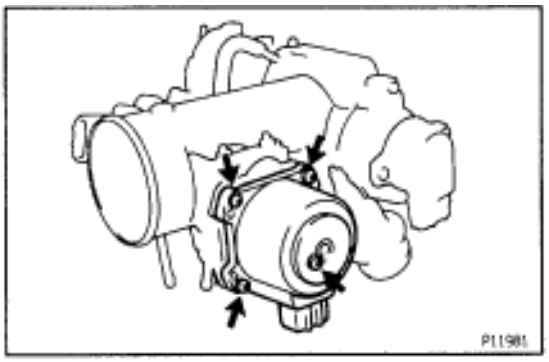

6. REINSTALL SUB–THROTTLE ACTUATOR

Install the sub–throttle actuator with the 4 screws.

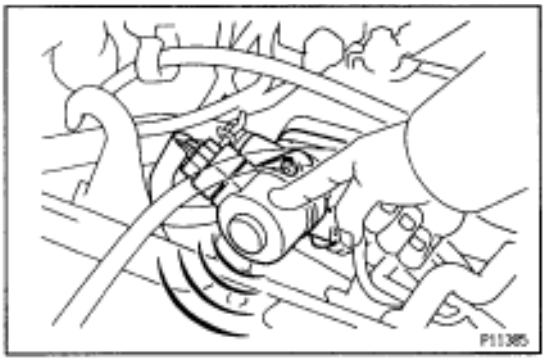

IDLE AIR CONTROL (IAC) VALVE ON–VEHICLE INSPECTION

1. INSPECT IAC VALVE FOR OPERATING SOUND

Check that there is a clicking sound immediately after stopping the engine.

If operation is not as specified, check the IAC valve, wiring and ECM.

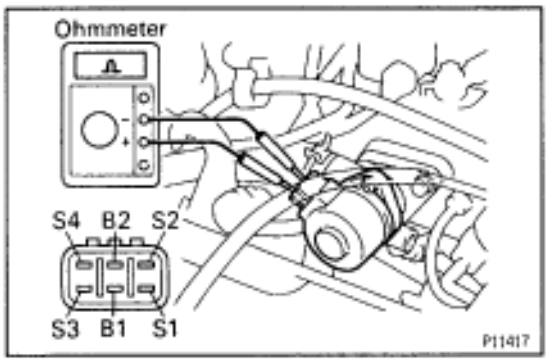

2. INSPECT IAC VALVE RESISTANCE

Using an ohmmeter, measure the resistance between the terminals (B1 (or B2) to others).

Resistance:

At 20˚C (68˚F) 18–24 Ω

If resistance is not as specified, replace the IAC valve.

COMPONENTS FOR REMOVAL AND INSTALLATION

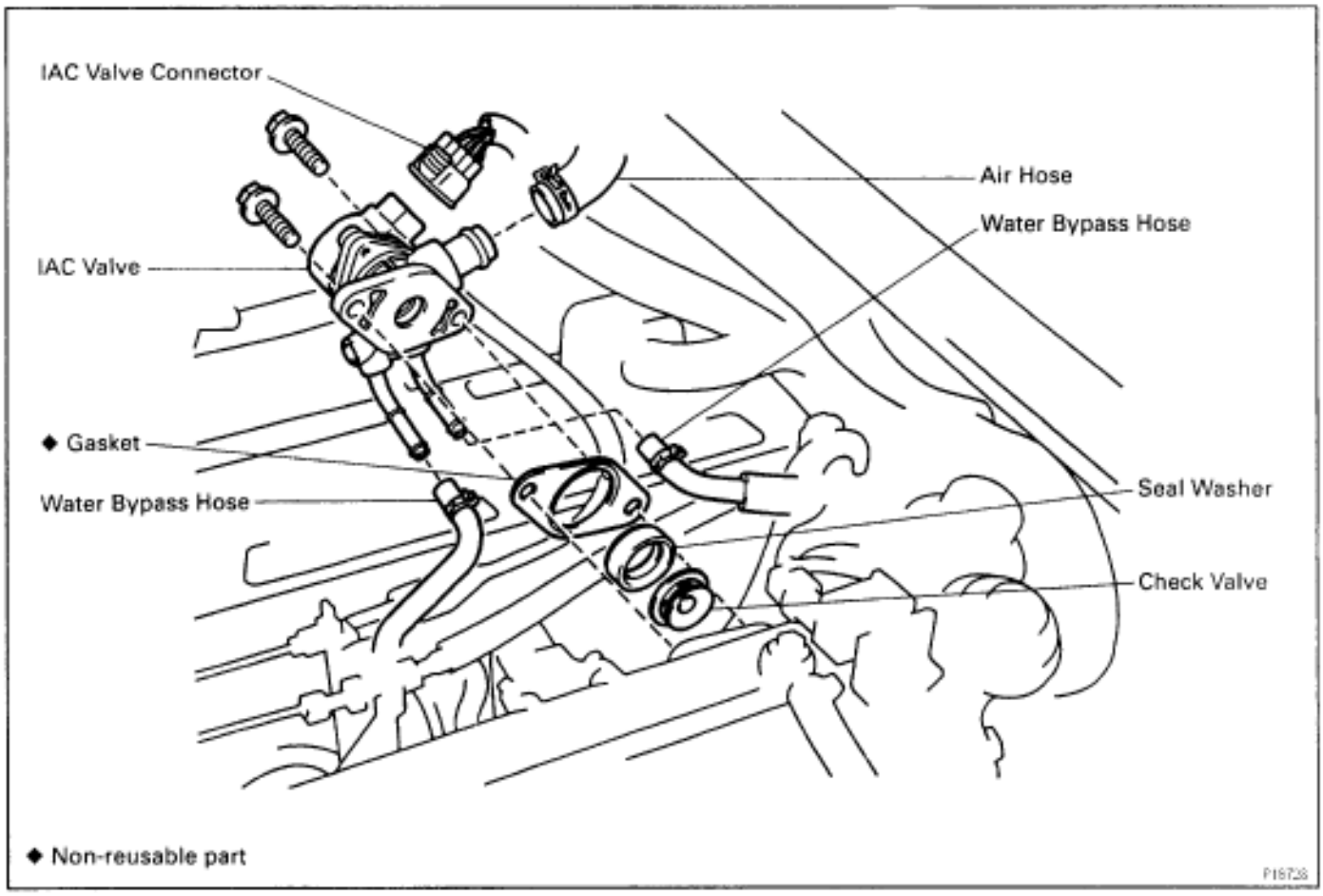

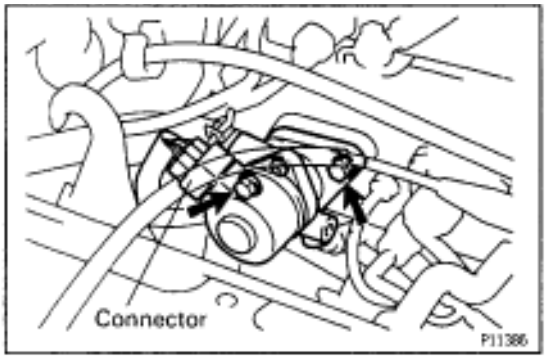

IAC VALVE REMOVAL

1. DRAIN ENGINE COOLANT

2. DISCONNECT IAC VAVE CONNECTOR

3. REMOVE IAC VALVE

(a) Remove the 2 bolts, and disconnect the IAC valve from the air intake chamber.

(b) Remove the gasket.

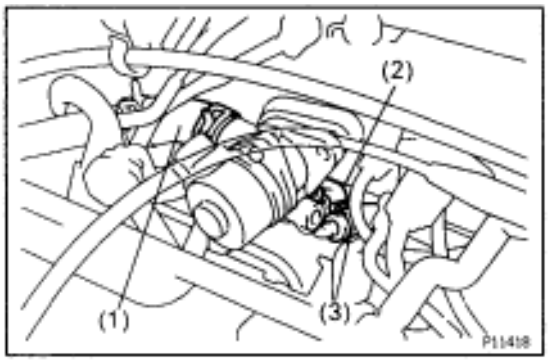

(c) Disconnect these hoses from the IAC valve, and remove the IAC valve:
   (1) Air hose
   (2) Water bypass hose (from No.2 water bypass pipe)
   (3) Water bypass hose (from No.4 water bypass pipe)

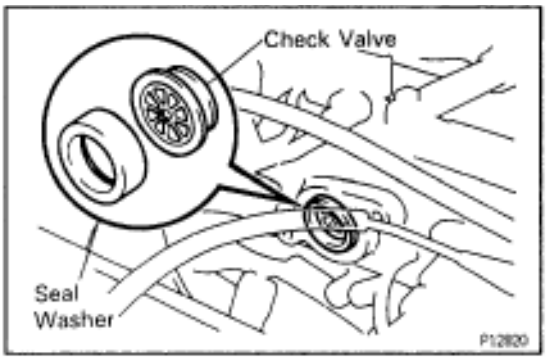

(d) Remove the seal washer and check valve.

IAC VALVE INSPECTION

INSPECT IAC VALVE OPERATION

(a) Apply battery voltage to terminals B1 and B2, and while repeatedly grounding S1–S2–S3–S4–S 1 in sequence, and check that the valve moves toward the closed position.

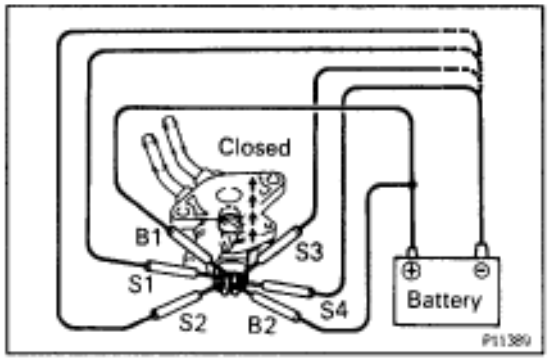

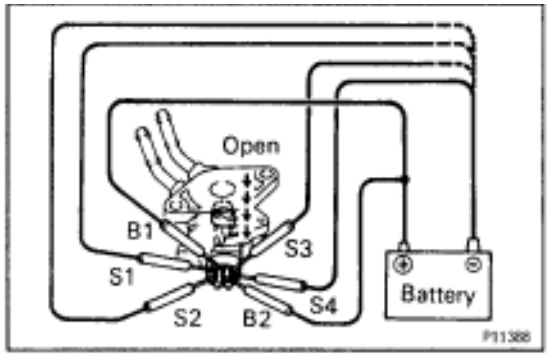

(b) Apply battery voltage to terminals B1 and B2, and while repeatedly grounding S4–S3–S2–S1–S 4 in sequence, check that the valve moves toward the open position.
If operation is not as specified, replace the IAC valve.

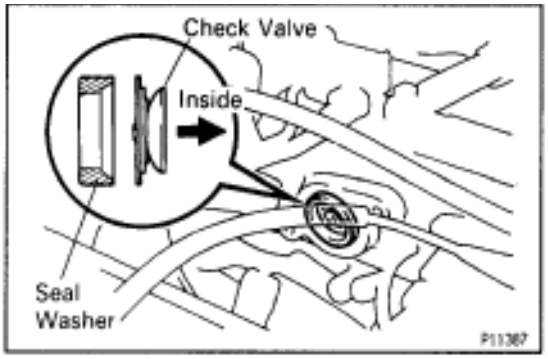

IAC VALVE INSTALLATION

1. INSTALL IAC VALVE

(a) Install the check valve and seal washer.
NOTICE: Be careful of the check valve and seal washer installation direction.

(b) Connect these hoses:
- Air hose
- Water bypass hose (from No.2 water bypass pipe)
- Water bypass hose (from No.4 water bypass pipe)

(c) Install a new gasket and the IAC valve with the 2 bolts.
Torque: 21 N·m (210 kgf·cm, 15 ft·lbf)

2. CONNECT IAC VALVE CONNECTOR

3. FILL WITH ENGINE COOLANT

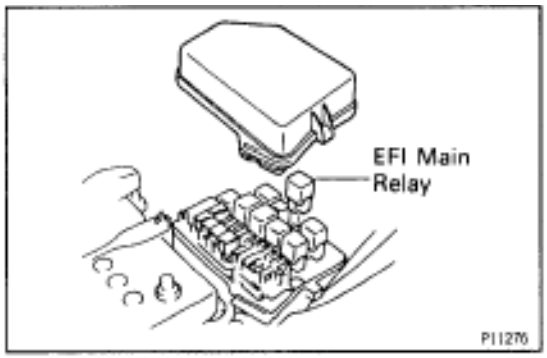

EFI MAIN RELAY
EFI MAIN RELAY INSPECTION

1. REMOVE EFI MAIN RELAY

LOCATION: In the engine compartment relay box.

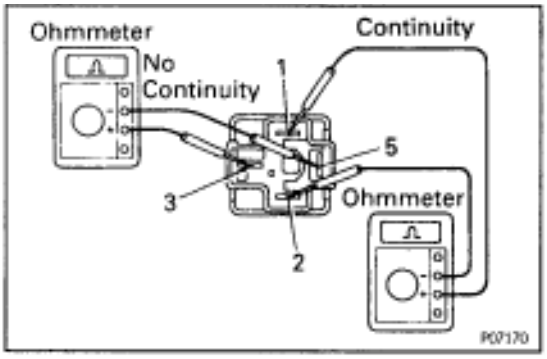

2. INSPECT EFI MAIN RELAY

A. Inspect relay continuity

(a) Using an ohmmeter, check that there is continuity between terminals 1 and 2.

(b) Check that there is no continuity between terminals 3 and 5.
If continuity is not as specified, replace the relay.

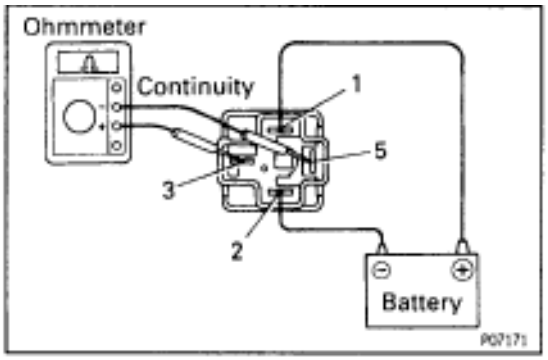

B. Inspect relay operation

(a) Apply battery voltage across terminals 1 and 2.

(b) Using an ohmmeter, check that there is continuity between terminals 3 and 5.
If operation is not as specified, replace the relay.

3. REINSTALL EFI MAIN RELAY

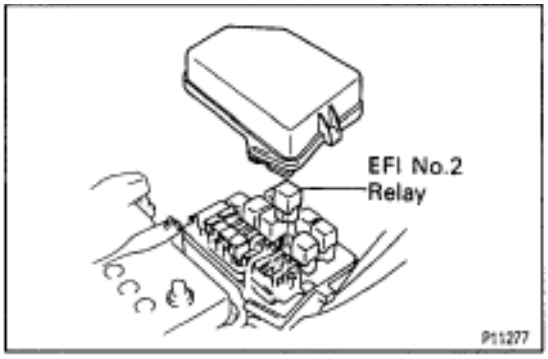

EFI NO.2 RELAY
EFI NO.2 RELAY INSPECTION

1. REMOVE EFI NO.2 RELAY

LOCATION: In the engine compartment relay box.

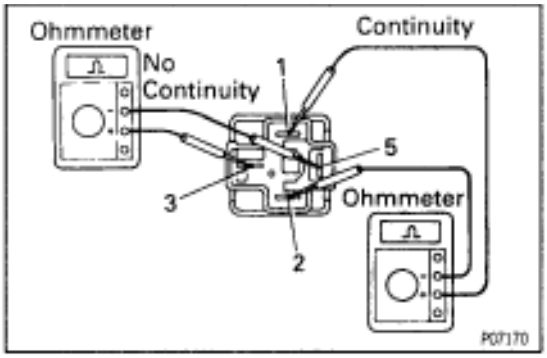

2. INSPECT EFI NO.2 RELAY

A. Inspect relay continuity

(a) Using an ohmmeter, check that there is continuity between terminals 1 and 2.

(b) Check that there is no continuity between terminals 3 and 5.

If continuity is not as specified, replace the relay.

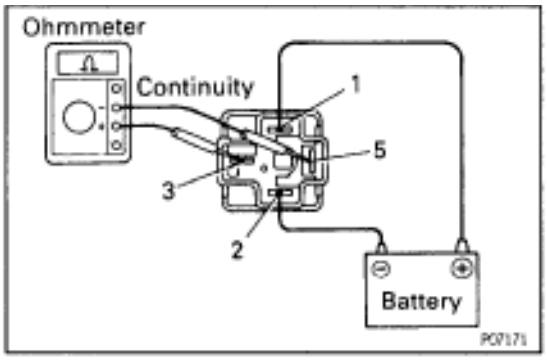

B. Inspect relay operation

(a) Apply battery voltage across terminals 1 and 2.

(b) Using an ohmmeter, check that there is continuity between terminals 3 and 5.

If operation is not as specified, replace the relay.

3. REINSTALL EFI NO.2 RELAY

SOLENOID RESISTOR COMPONENTS FOR REMOVAL AND INSTALLATION

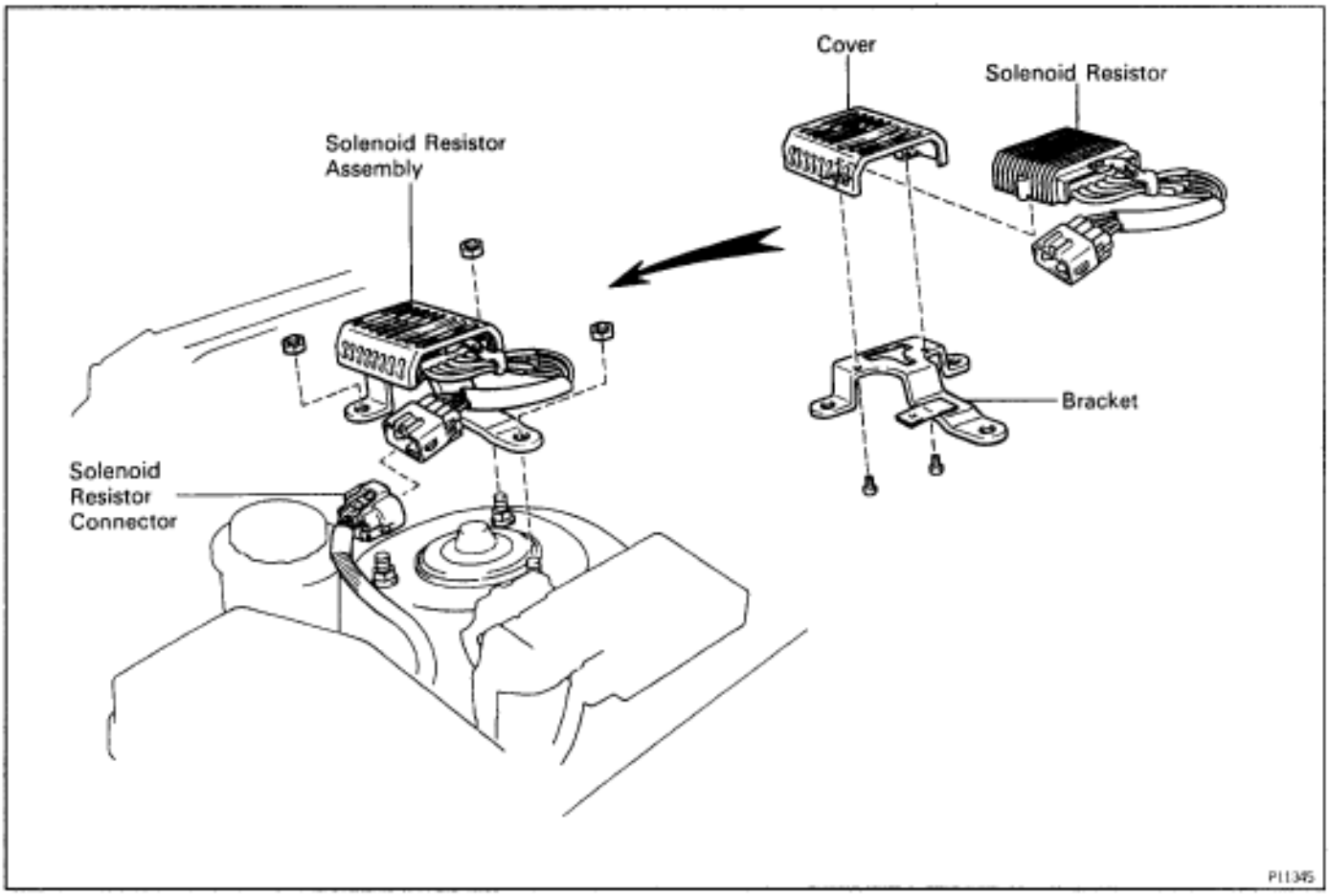

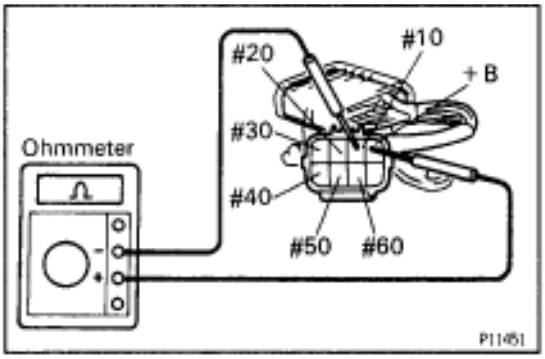

SOLENOID RESISTOR INSPECTION

1. **DISCONNECT SOLENOID RESISTOR CONNECTOR**
2. **INSPECT SOLENOID RESISTOR**
   Using an ohmmeter, measure the resistance between terminal +B and other terminals.
   Resistance:
   At 20˚C (68˚F) Approx. 6 Ω
   If the resistance is not as specified, replace the resistor.
3. **RECONNECT SOLENOID RESISTOR CONNECTOR**

VSV FOR FUEL PRESSURE CONTROL COMPONENTS FOR REMOVAL AND INSTALLATION

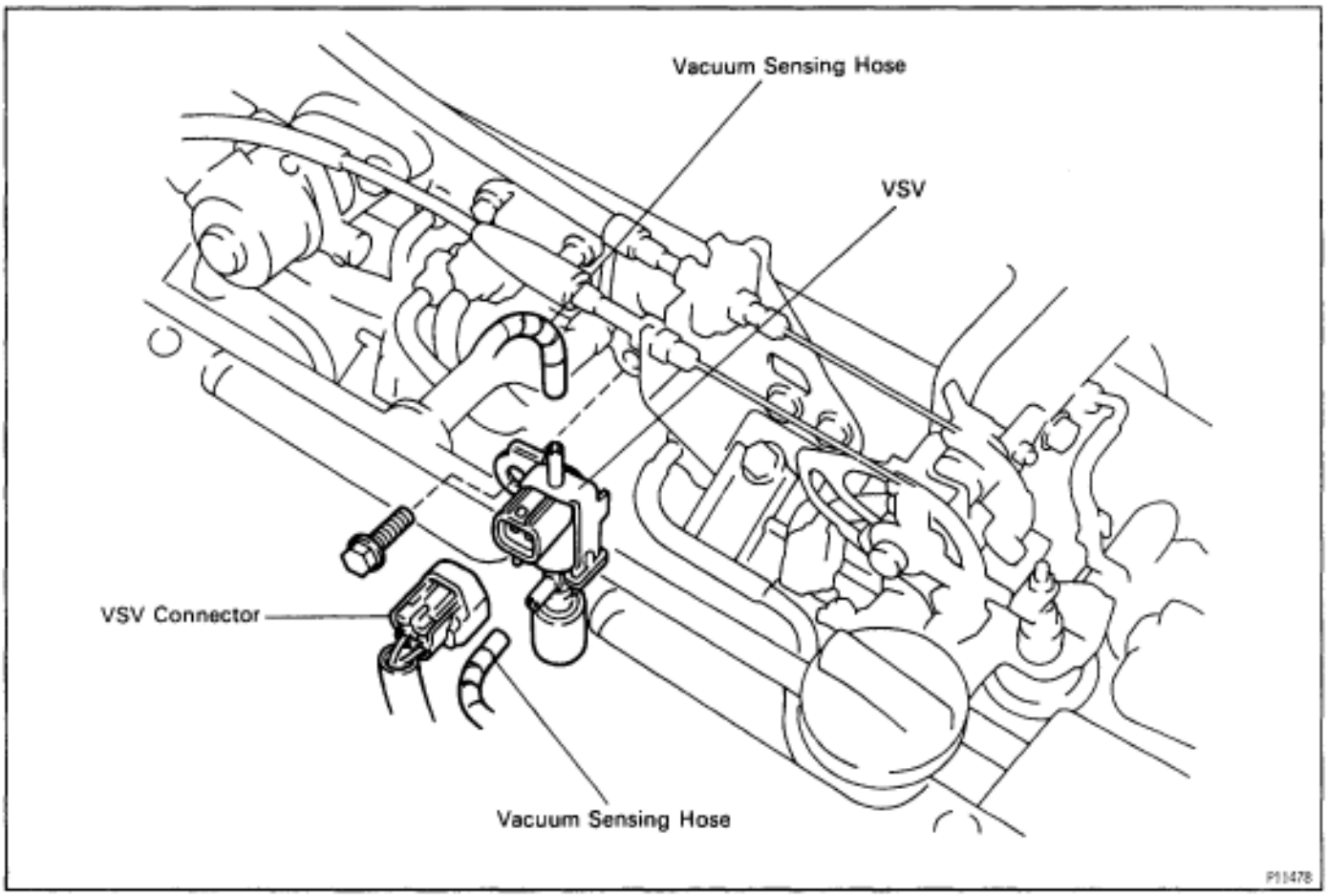

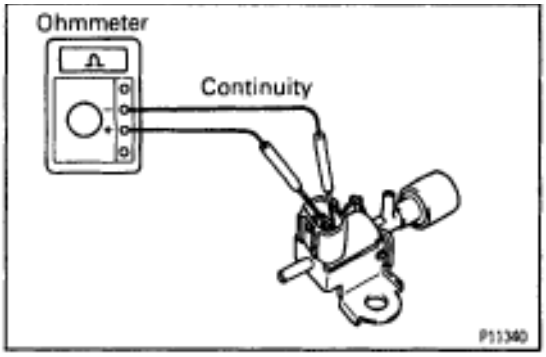

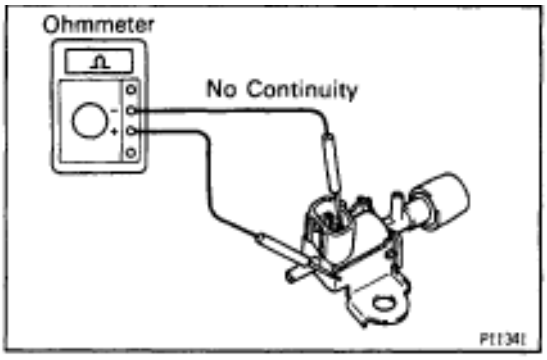

VSV INSPECTION

1. **REMOVE VSV**
2. **INSPECT VSV**

A. Inspect VSV for open circuit

Using an ohmmeter, check that there is continuity between the terminals.

Resistance:

At 20°C (68°F) 33–39 Ω

If there is no continuity, replace the VSV.

B. Inspect VSV for ground

Using an ohmmeter, check that there is no continuity between each terminal and the body.

If there is continuity, replace the VSV.

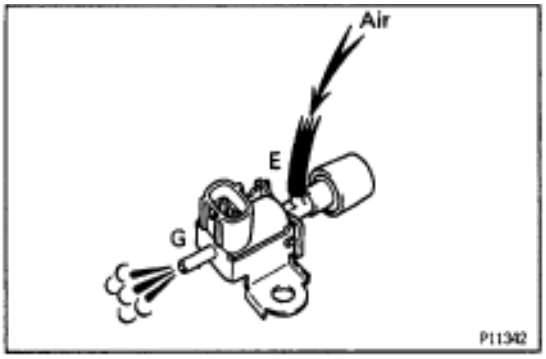

C. Inspect VSV operation

(a) Check that air flows from port E to G.

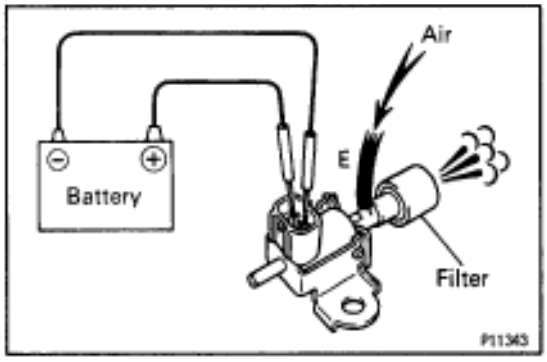

(b) Apply battery voltage across the terminals.

(c) Check that air flows from port E to the filter.
If operation is not as specified, replace the VSV.

3. REINSTALL VSV

VSV FOR INTAKE AIR CONTROL VALVE COMPONENTS FOR REMOVAL AND INSTALLATION

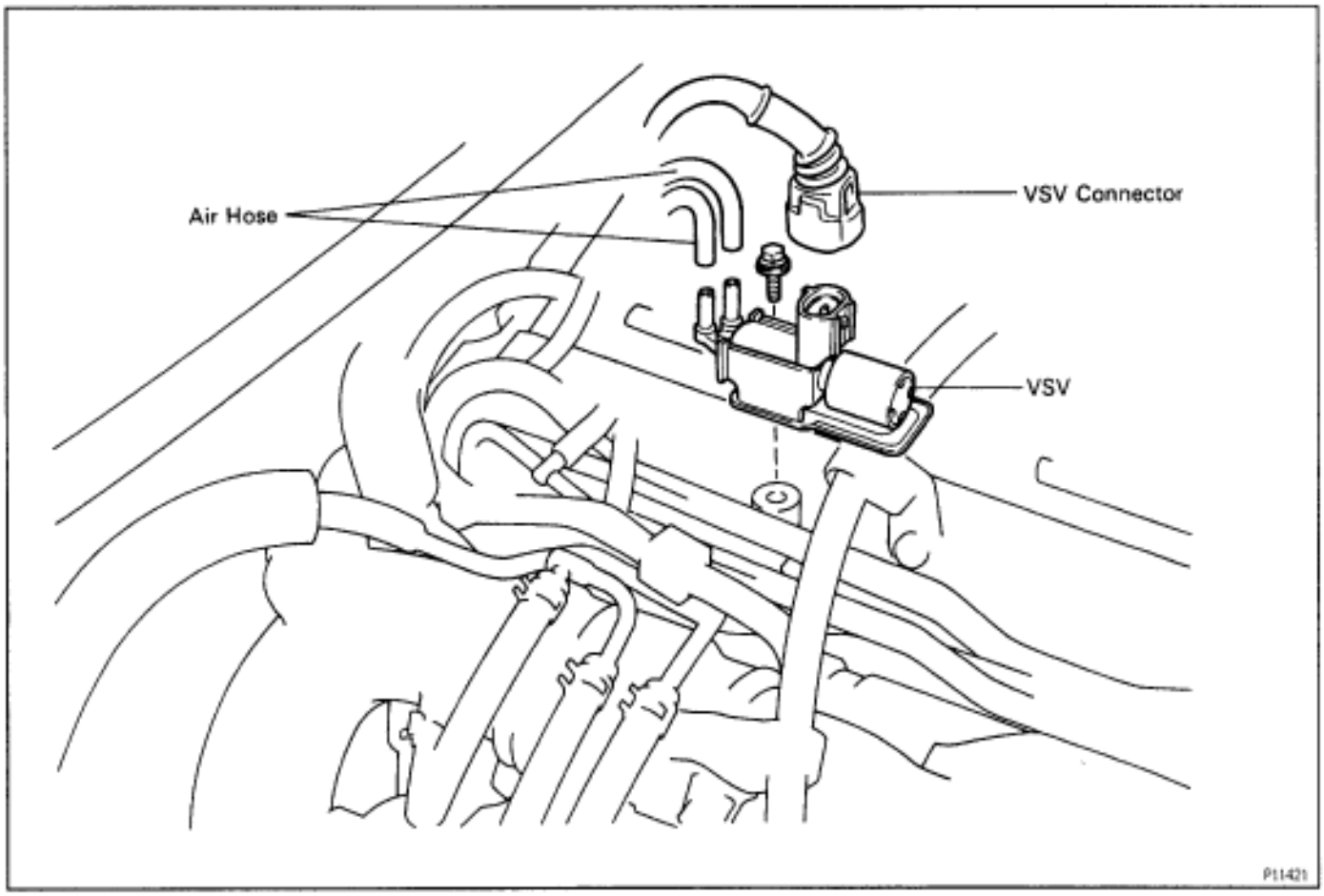

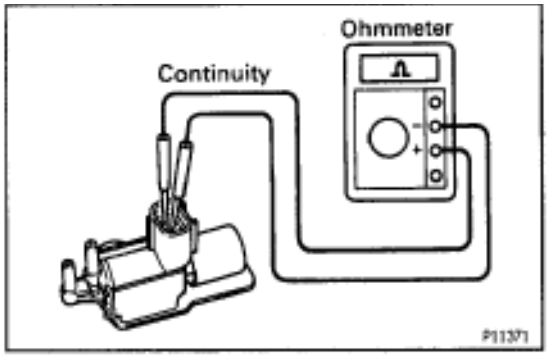

VSV INSPECTION

1. REMOVE VSV

2. INSPECT VSV

A. Inspect VSV for open circuit

Using an ohmmeter, check that there is continuity between the terminals.

Resistance:

At 20°C (68°F) 38.5–44.5 Ω

If there is no continuity, replace the VSV.

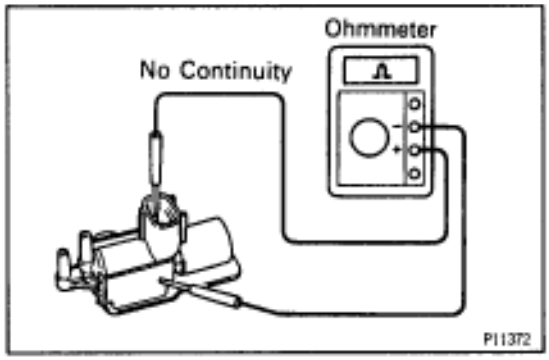

B. Inspect VSV for ground

Using an ohmmeter, check that there is no continuity between each terminal and the body.

If there is continuity, replace the VSV.

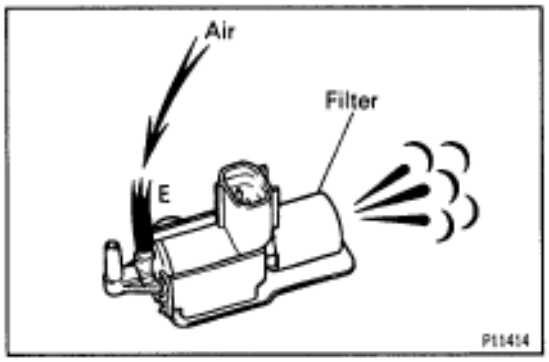

C. Inspect VSV operation

(a) Check that air flows from port E to the filter.

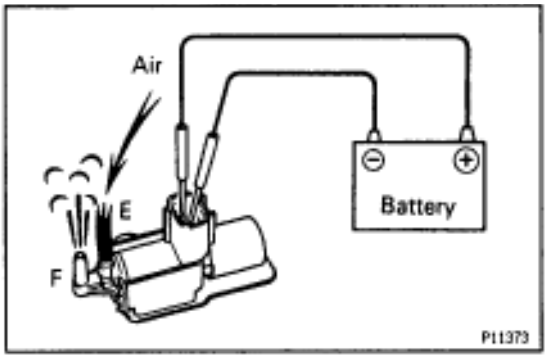

(b) Apply battery voltage across the terminals.

(c) Check that air flows from port E to F.

If operation is not as specified, replace the VSV.

3. REINSTALL VSV

VSV FOR WASTE GATE VALVE COMPONENTS FOR REMOVAL AND INSTALLATION

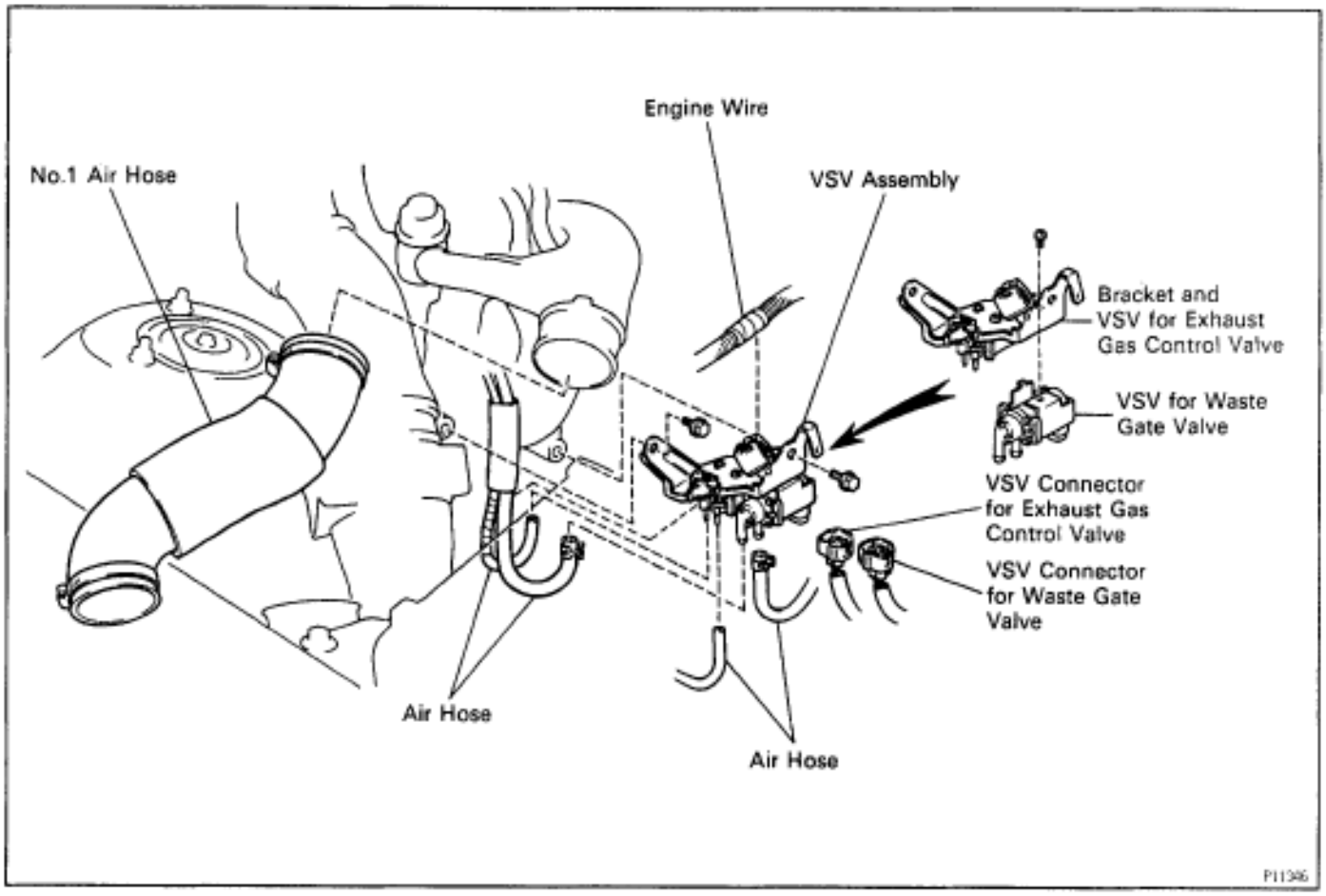

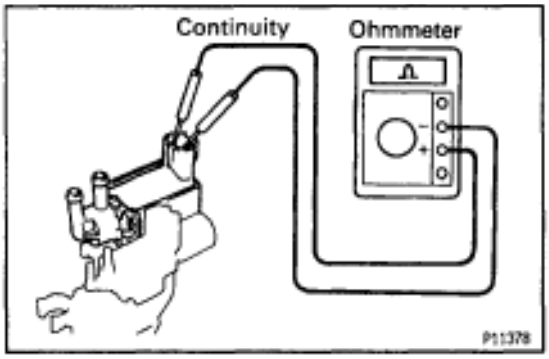

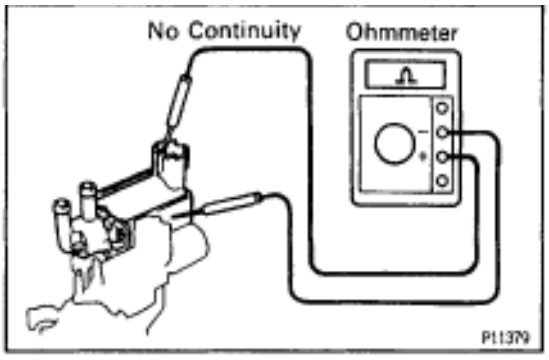

VSV INSPECTION

1. **REMOVE VSV ASSEMBLY**
2. **INSPECT VSV**

A. Inspect VSV for open circuit

Using an ohmmeter, check that there is continuity between the terminals.

Resistance:

At 20°C (68°F) 22–26 Ω

If there is no continuity, replace the VSV.

B. Inspect VSV for ground

Using an ohmmeter, check that there is no continuity between each terminal and the body.

If there is continuity, replace the VSV.

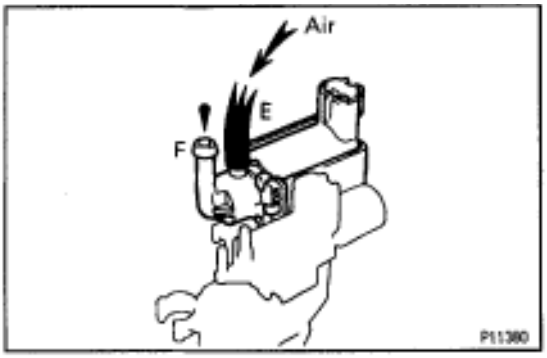

C. Inspect VSV operation

(a) Check that air does not flow from port E to F.

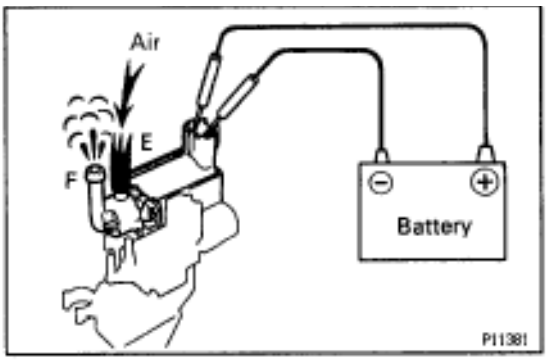

(b) Apply battery voltage across the terminals.

(c) Check that air flows from port E to F.

If operation is not as specified, replace the VSV.

3. REINSTALL VSV ASSEMBLY

VSV FOR EXHAUST GAS CONTROL VALVE
COMPONENTS FOR REMOVAL AND INSTALLATION

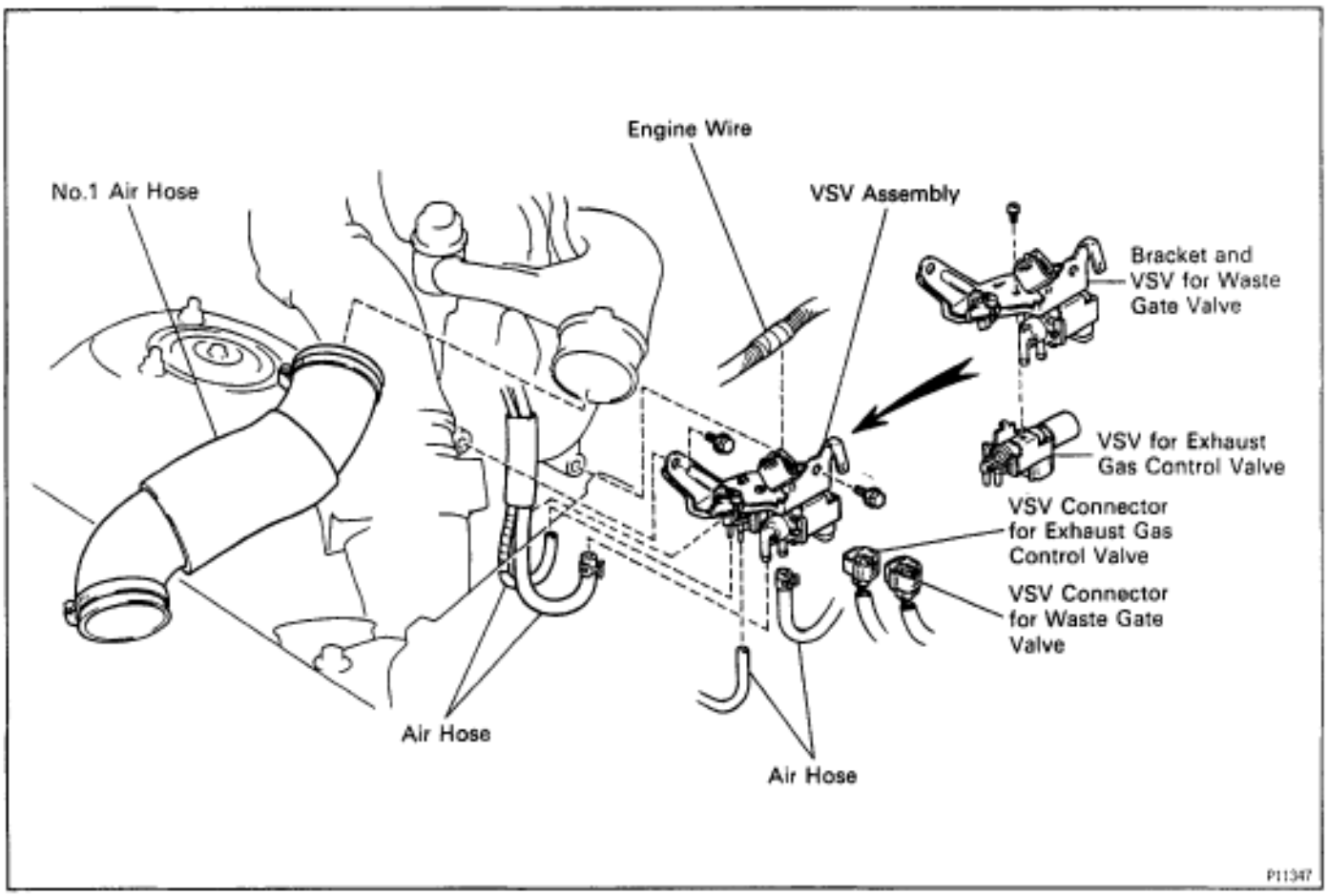

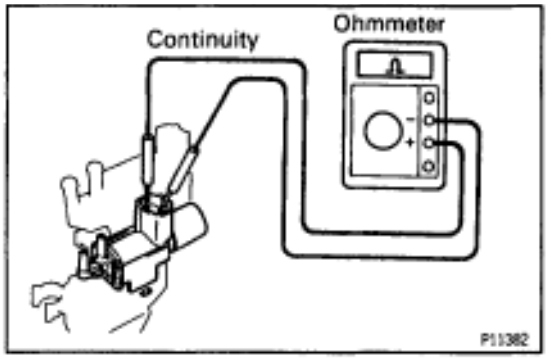

VSV INSPECTION

1. REMOVE VSV ASSEMBLY

2. INSPECT VSV

A. Inspect VSV for open circuit

Using an ohmmeter, check that there is continuity between the terminals.

Resistance:

At 20°C (68°F) 38.5–44.5 Ω

If there is no continuity, replace the VSV.

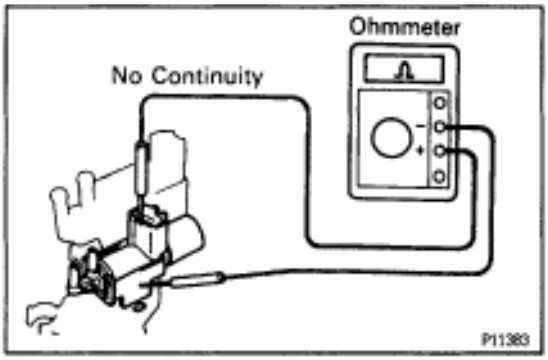

B. Inspect VSV for ground

Using an ohmmeter, check that there is no continuity between each terminal and the body.

If there is continuity, replace the VSV.

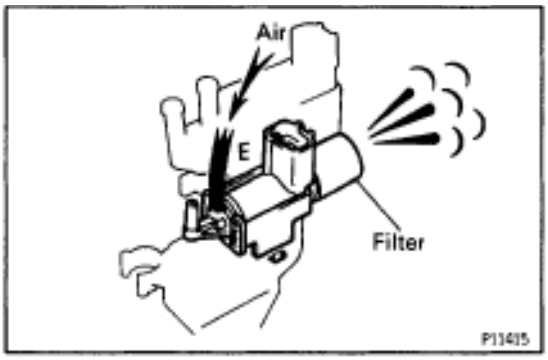

C. Inspect VSV operation

(a) Check that air flows from port E to the filter.

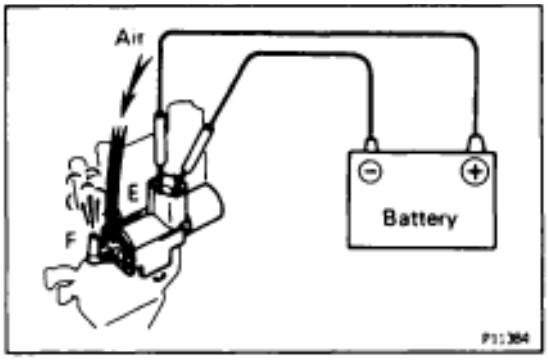

(b) Apply battery voltage across the terminals.

(c) Check that air flows from port E to F.

If operation is not as specified, replace the VSV.

3. REINSTALL VSV ASSEMBLY

VSV FOR EXHAUST BYPASS VALVE COMPONENTS FOR REMOVAL AND INSTALLATION

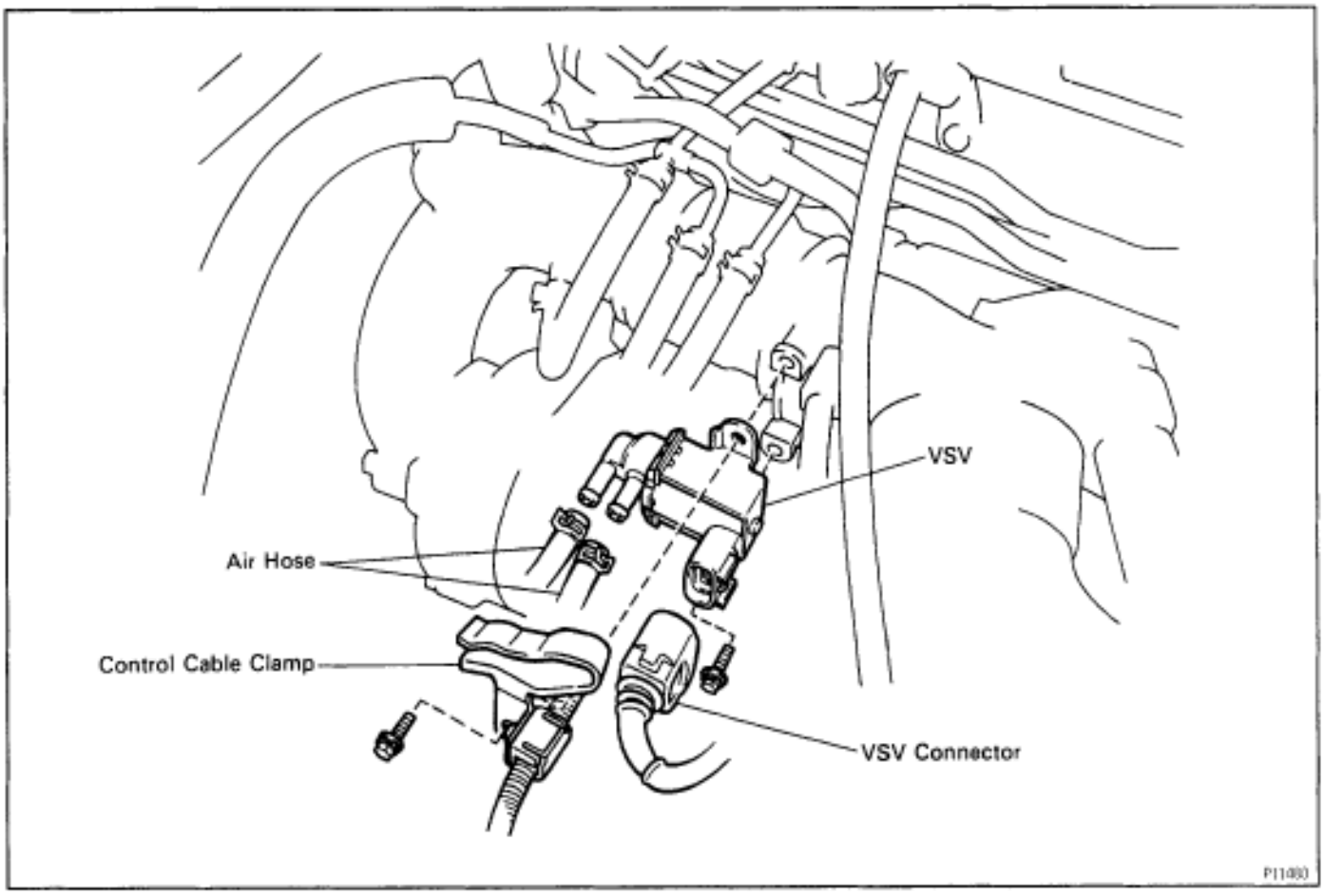

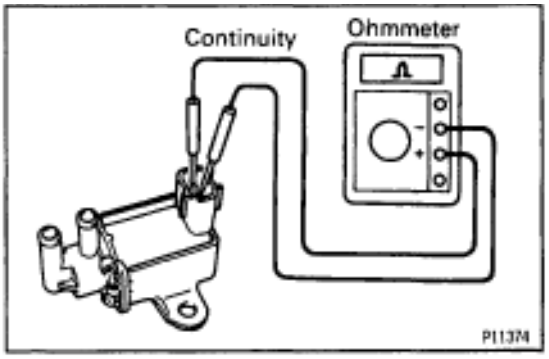

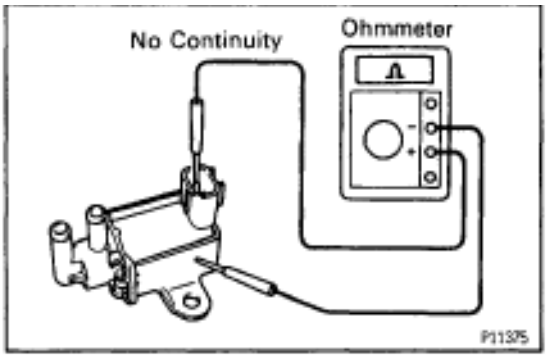

VSV INSPECTION

1. **REMOVE VSV**
2. **INSPECT VSV**

A. Inspect VSV for open circuit

Using an ohmmeter, check that there is continuity between the terminals.

Resistance:

At 20°C (68°F) 22–26 Ω

If there is no continuity, replace the VSV.

B. Inspect VSV for ground

Using an ohmmeter, check that there is no continuity between each terminal and the body.

If there is continuity, replace the VSV.

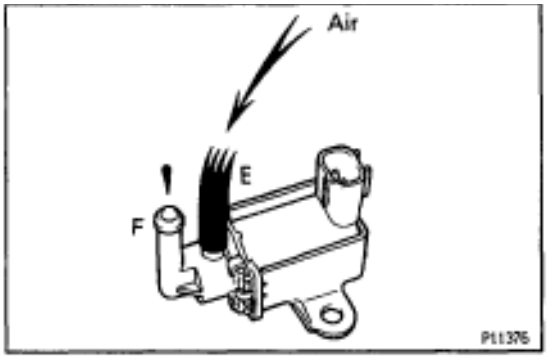

C. Inspect VSV operation

(a) Check that air does not flow from port E to F.

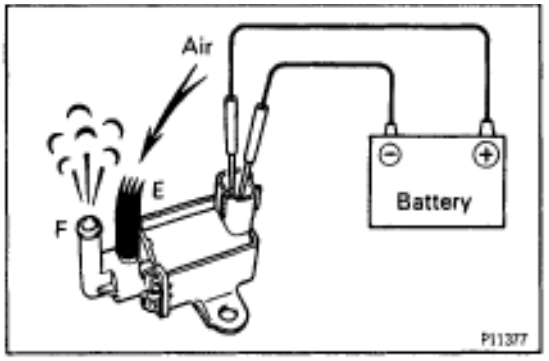

(b) Apply battery voltage across the terminals.

(c) Check that air flows from port E to F.

If operation is not as specified, replace the VSV.

3. REINSTALL VSV

VSV FOR EVAP
COMPONENTS FOR REMOVAL AND INSTALLATION

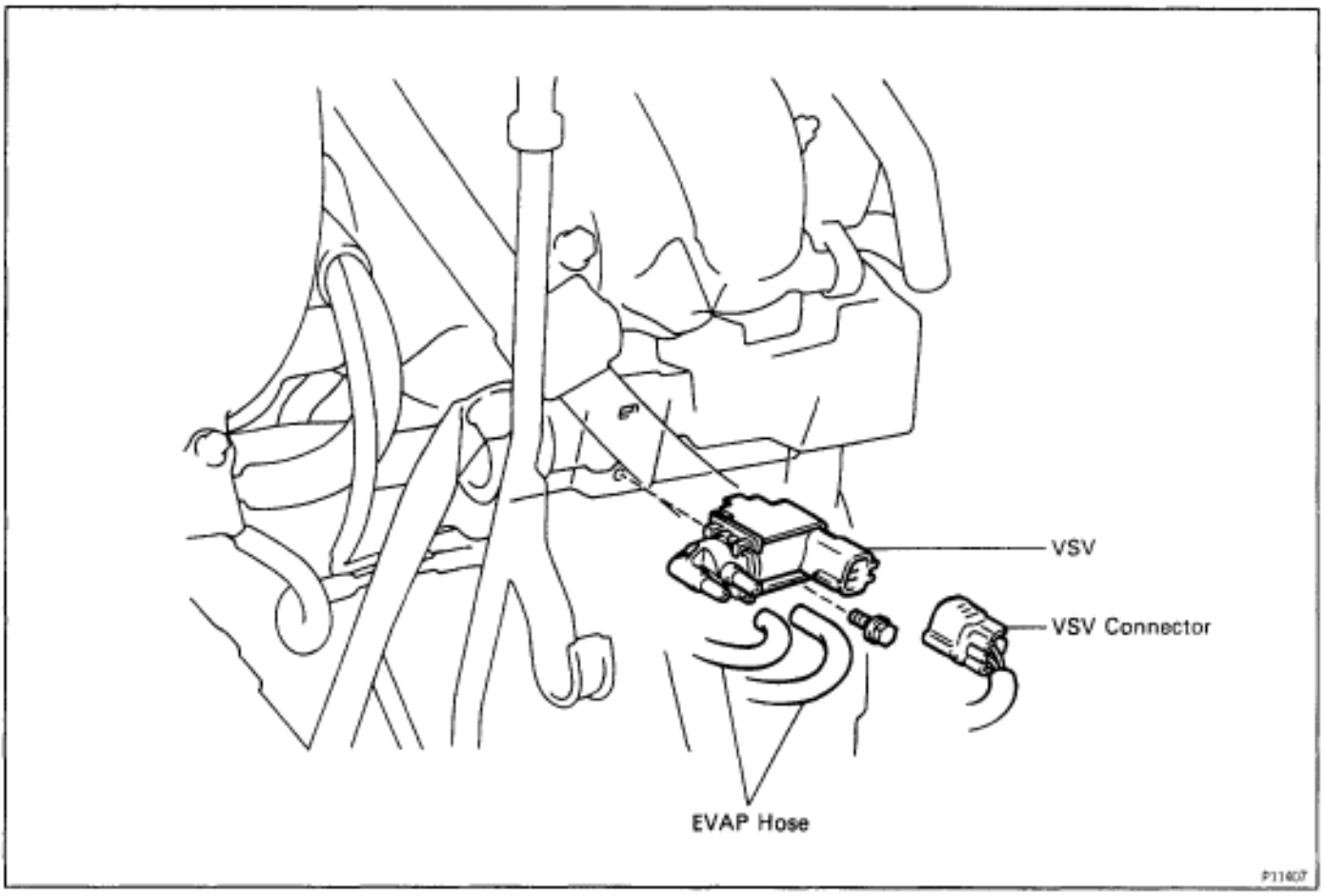

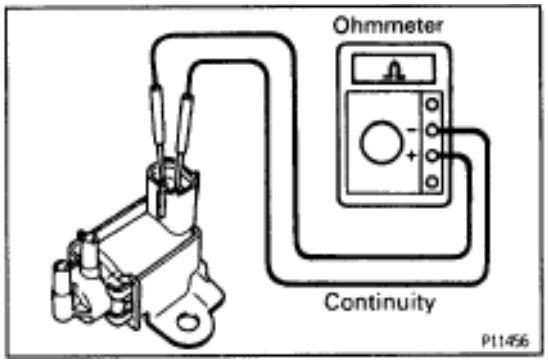

VSV INSPECTION

1. REMOVE VSV

2. INSPECT VSV

A. Inspect VSV for open circuit

Using an ohmmeter, check that there is continuity between the terminals.

Resistance:

At 20°C (68°F) 30–34 Ω

If there is no continuity, replace the VSV.

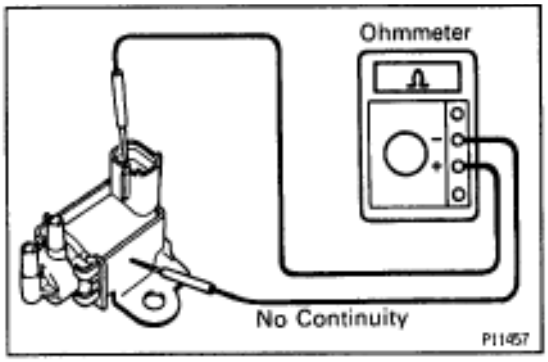

B. Inspect VSV for ground

Using an ohmmeter, check that there is no continuity between each terminal and the body.

If there is continuity, replace the VSV.

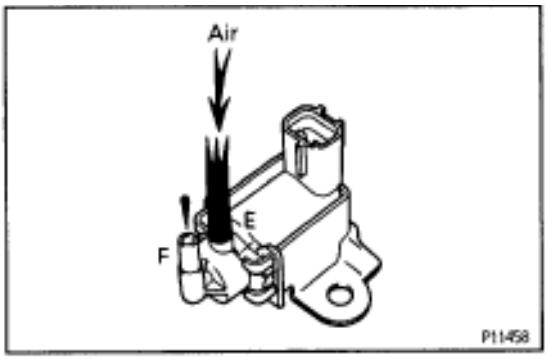

C. Inspect VSV operation

(a) Check that air does not flow from port E to F.

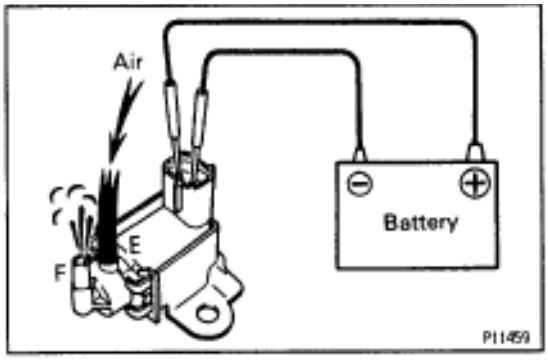

(b) Apply battery voltage across the terminals.

(c) Check that air flows from port E to F.

If operation is not as specified, replace the VSV.

3. REINSTALL VSV

VSV FOR EGR
COMPONENTS FOR REMOVAL AND INSTALLATION

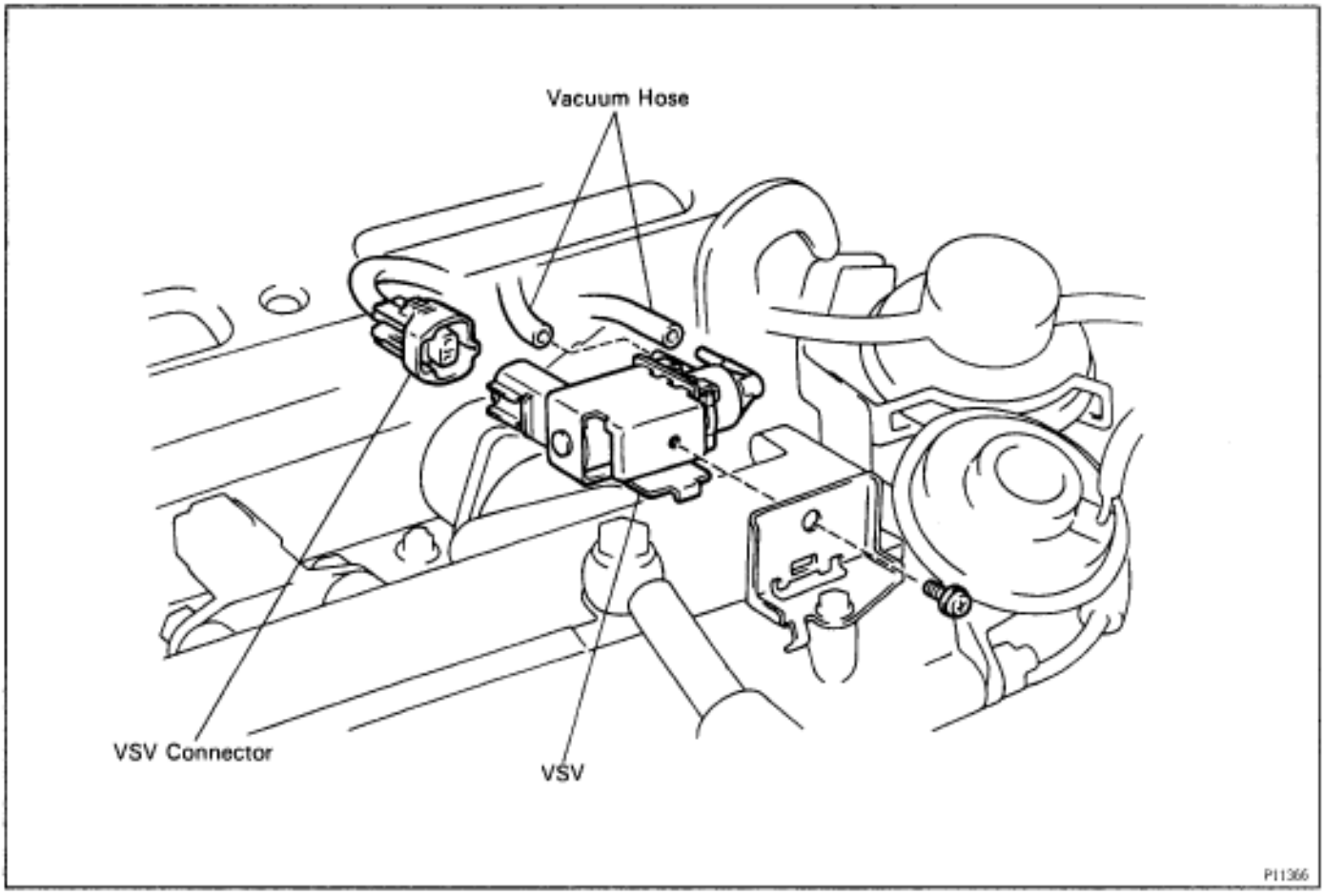

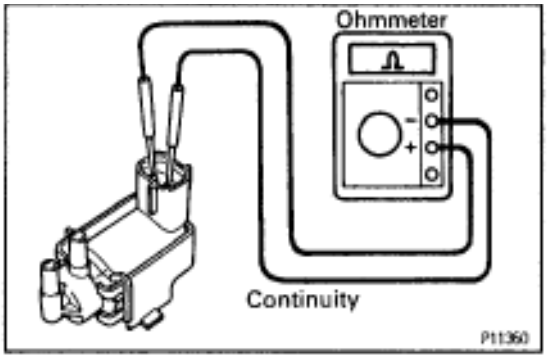

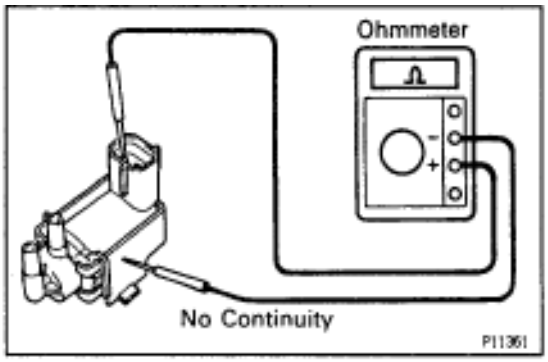

VSV INSPECTION

1. **REMOVE VSV**
2. **INSPECT VSV**

A. Inspect VSV for open circuit

Using an ohmmeter, check that there is continuity between the terminals.

Resistance:

At 20°C (68°F) 30–34 Ω

If there is no continuity, replace the VSV.

B. Inspect VSV for ground

Using an ohmmeter, check that there is no continuity between each terminal and the body.

If there is continuity, replace the VSV.

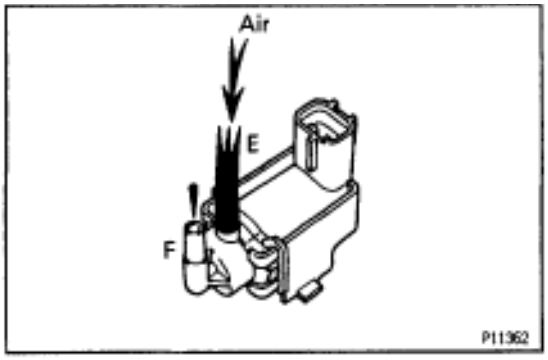

C. Inspect VSV operation

(a) Check that air does not flow from port E to F.

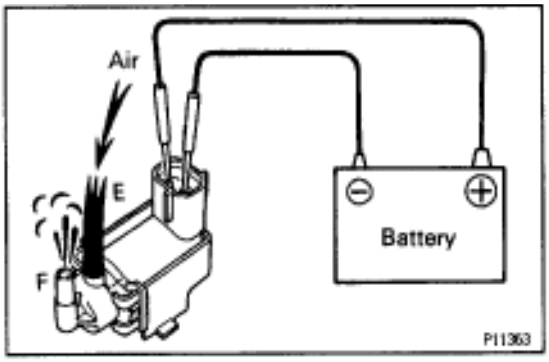

(b) Apply battery voltage across the terminals.

(c) Check that air flows from port E to F.
If operation is not as specified, replace the VSV.

3. REINSTALL VSV

ENGINE COOLANT TEMPERATURE (ECT) SENSOR
COMPONENTS FOR REMOVAL AND INSTALLATION

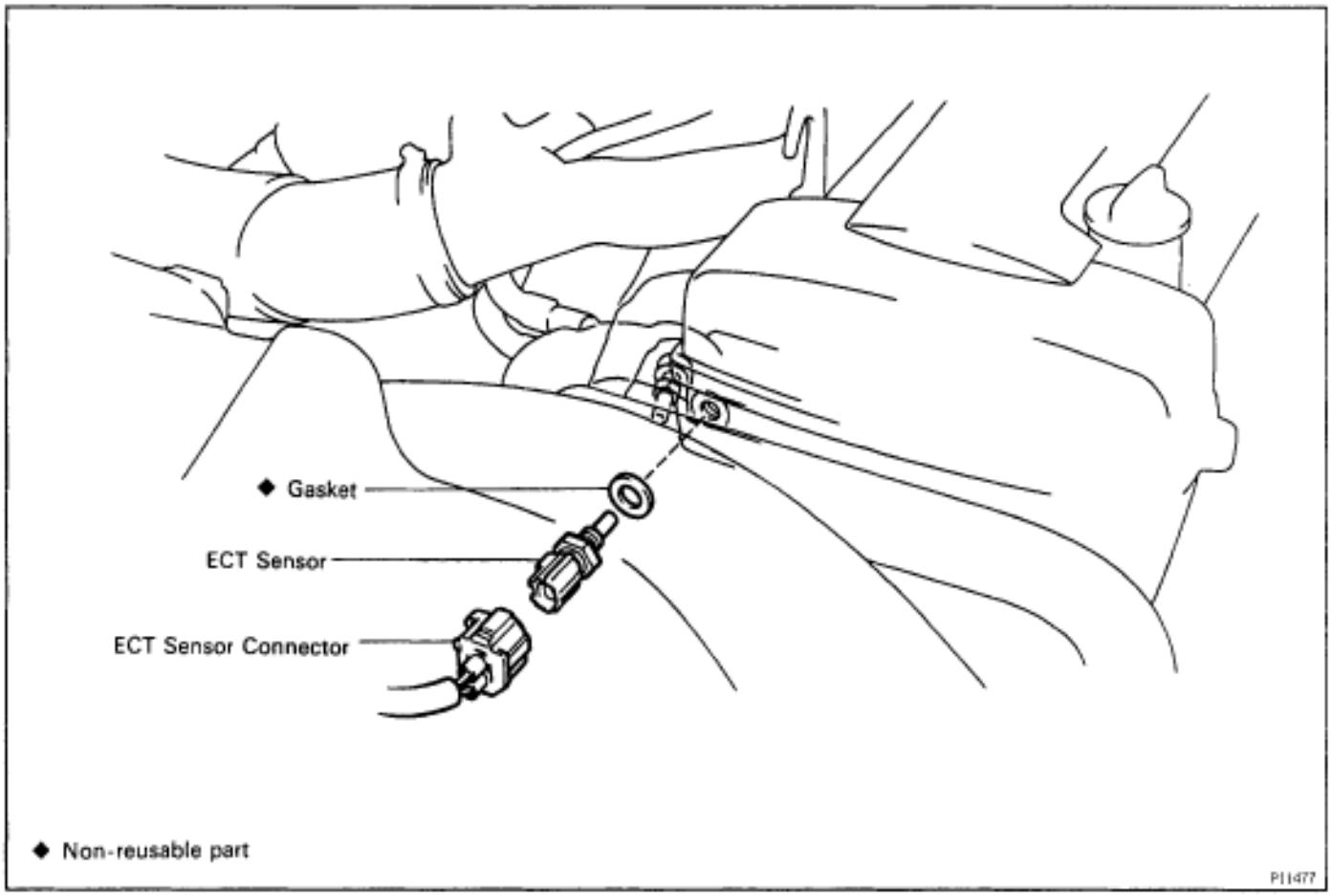

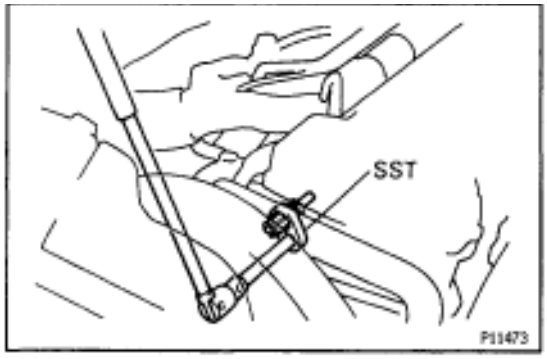

ECT SENSOR INSPECTION

1. DRAIN ENGINE COOLANT

2. REMOVE ECT SENSOR

(a) Disconnect the ECT sensor connector.

(b) Using SST, remove the ECT sensor and gasket.
SST 09205–76030

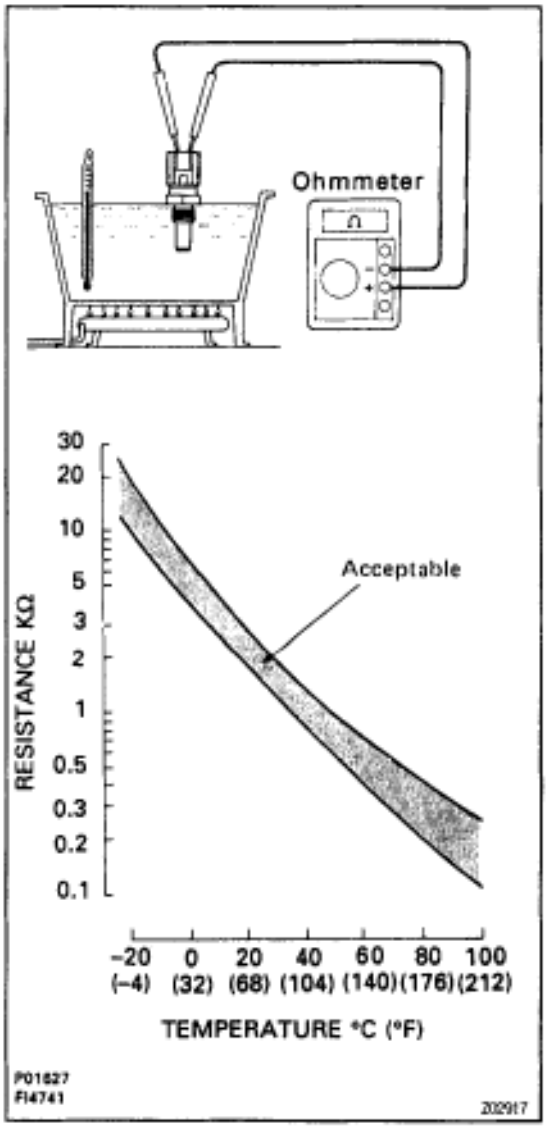

3. INSPECT ECT SENSOR

Using an ohmmeter, measure the resistance between the terminals.

Resistance:

Refer to the graph

If the resistance is not as specified, replace the ECT sensor.

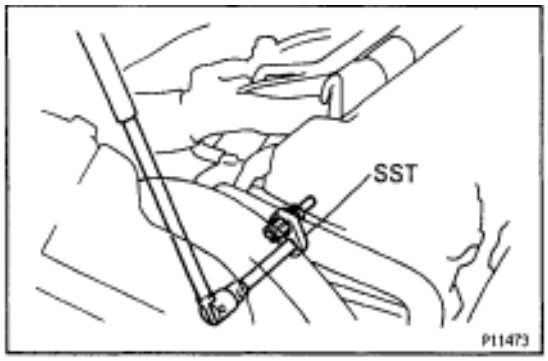

4. REINSTALL ECT SENSOR

(a) Install a new gasket to the ECT sensor.

(b) Using SST, install the ECT sensor.
SST 09205–76030

(c) Connect the ECT sensor connector.

5. REFILL WITH ENGINE COOLANT

EGR GAS TEMPERATURE SENSOR COMPONENTS FOR REMOVAL AND INSTALLATION

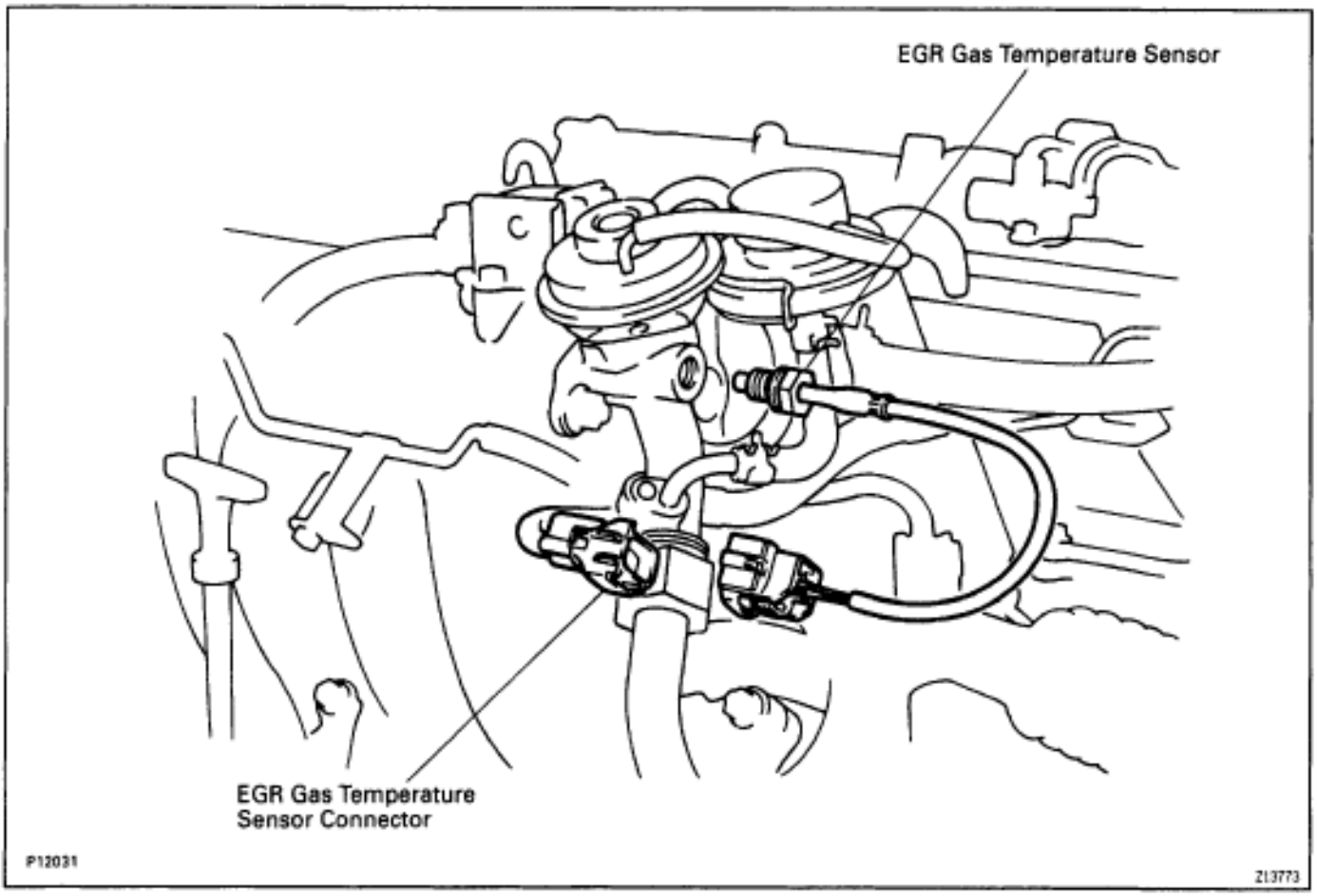

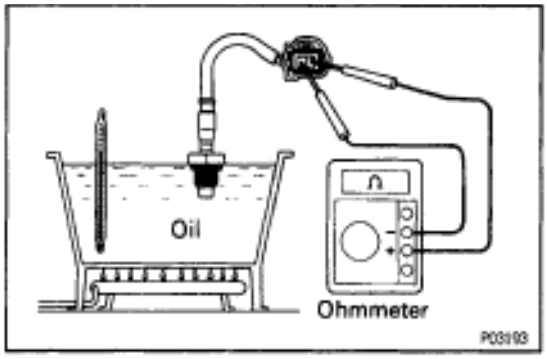

EGR GAS TEMPERATURE SENSOR INSPECTION

1. **REMOVE EGR GAS TEMPERATURE SENSOR**
2. **INSPECT EGR GAS TEMPERATURE SENSOR**

   Using an ohmmeter, measure the resistance between the terminals.

   Resistance:

   At 50˚C (112˚F)

   64–97 kΩ

   At 100˚C (212˚F)

   11–16 k Ω

   At 150˚C (302˚F)

   2–4 k Ω

   If the resistance is not as specified, replace the sensor.

   Torque: 20 N·m (200 kgf·cm, 14 ft·lbf)
3. **REINSTALL EGR GAS TEMPERATURE SENSOR**

TURBO PRESSURE SENSOR COMPONENTS FOR REMOVAL AND INSTALLATION

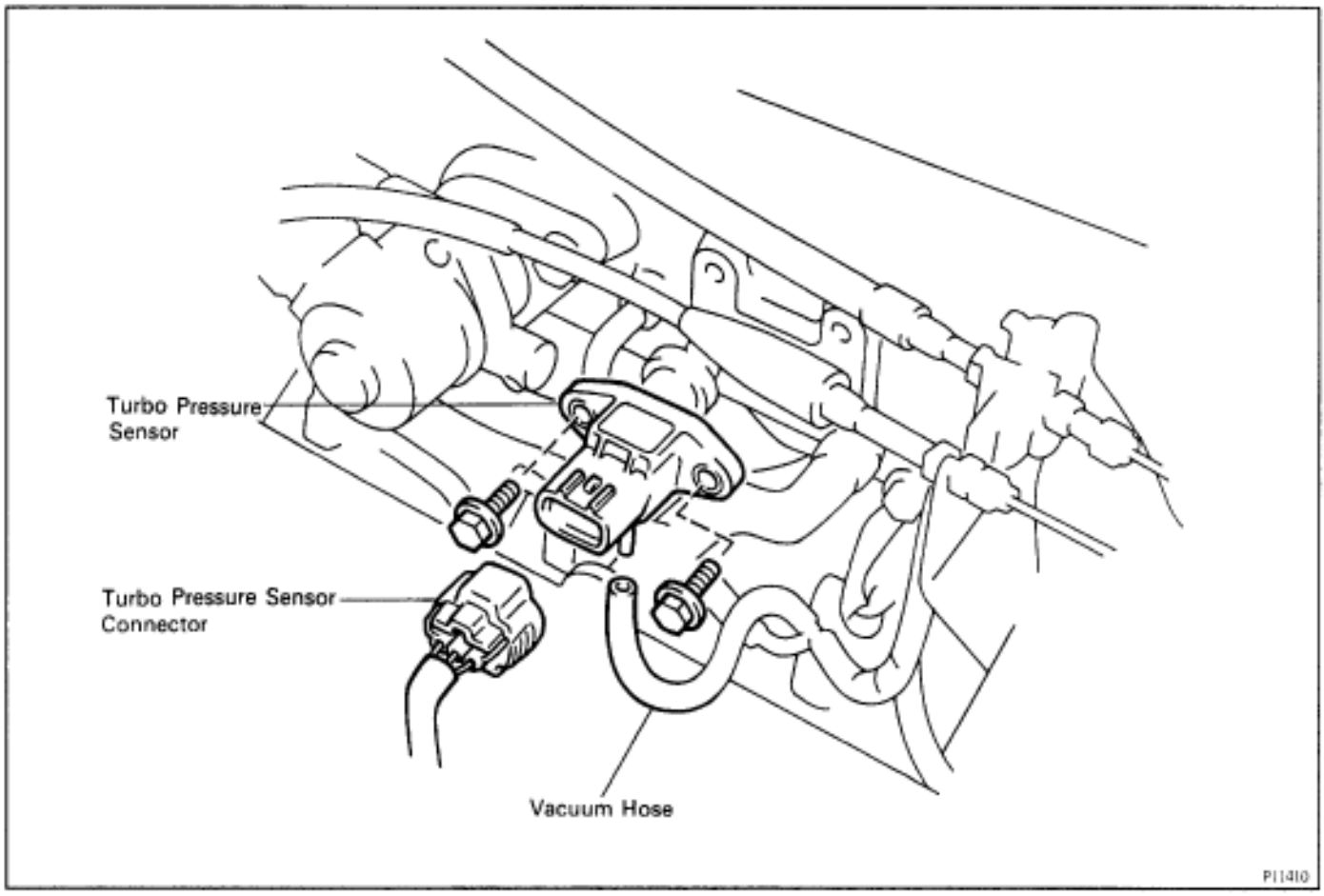

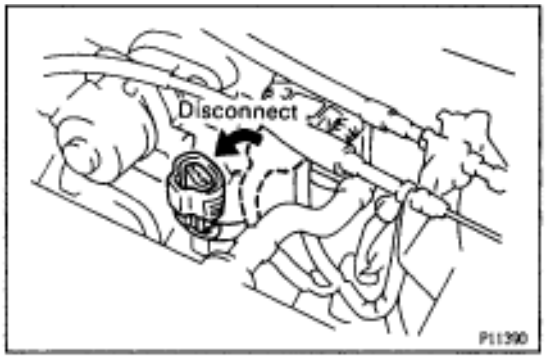

TURBO PRESSURE SENSOR INSPECTION

1. INSPECT POWER SOURCE VOLTAGE OF TURBO PRESSURE SENSOR

(a) Disconnect the turbo pressure sensor connector.

(b) Turn the ignition switch ON.

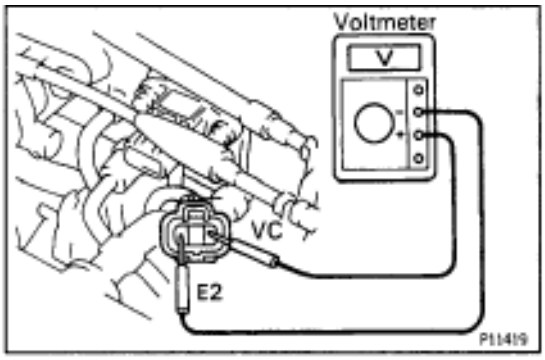

(c) Using a voltmeter, measure the voltage between connector terminals VC and E2 of the wiring harness side.

Voltage:

4.5–5.5 V

(d) Turn the ignition switch OFF.

(e) Reconnect the turbo pressure sensor connector.

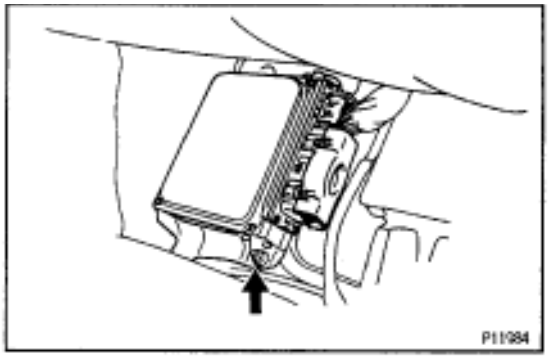

2. INSPECT SUPPLY POWER OF TURBO PRESSURE SENSOR

(a) Disconnect the ECM from the ECU bracket.
(See steps 1 to 4 in ECM)

(b) Install SST (check harness) between the ECM and wiring connectors.
(See standard value of ECM terminals in Engine Trouble-shooting)
SST 09990–01000

(c) Turn the ignition switch ON.

(d) Disconnect the vacuum hose from the turbo pressure sensor.

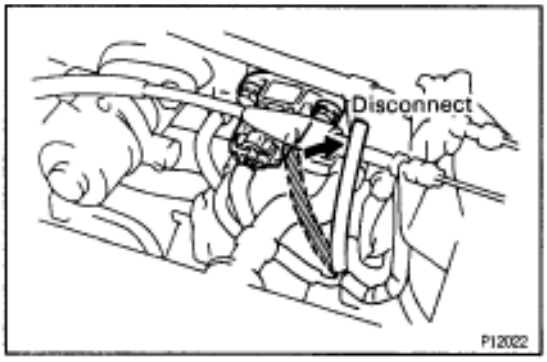

(e) Connect a voltmeter to terminals PIM and E2 of the ECM, and measure the output voltage under ambient atmospheric pressure.

(f) Apply vacuum to the turbo pressure sensor in 13.3 kPa (100 mmHg, 3.94 in.Hg) segments to 66.7 kPa (500 mmHg, 19.69 in.Hg).

(g) Measure the voltage drop from step (c) above for each segment.

Voltage drop

Applied Vacuum kPa (mmHg) (in.Hg.)	13.3 (100) (3.94)	26.7 (200) (7.87)	40.0 (300) (11.81)	53.3 (400) (15.75)	66.7 (500) (19.69)
Voltage drop V	0.15–0.35	0.4–0.6	0.65–0.85	0.9–1.1	1.15–1.35

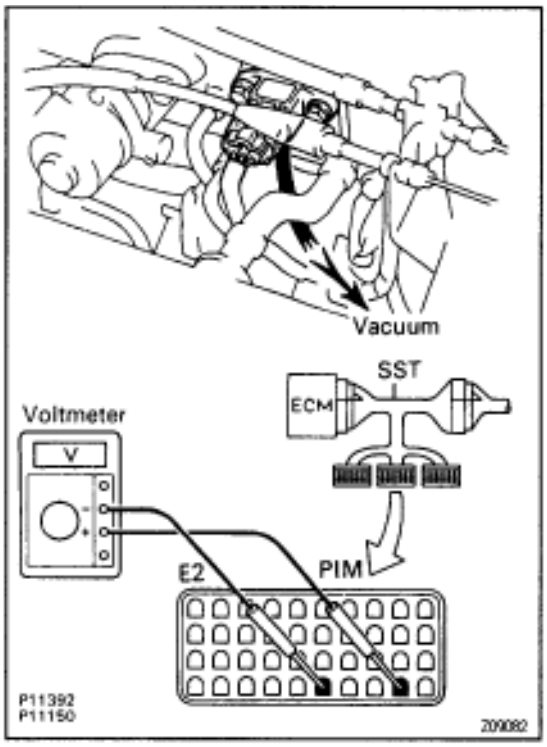

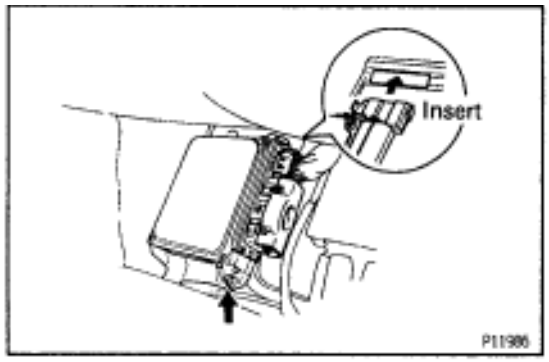

(h) Remove the SST.
SST 09990–01000

(i) Reinstall the ECM. (See steps 6 to 9 in ECM)

(j) Reconnect the vacuum hose to the turbo pressure sensor.

KNOCK SENSOR
COMPONENTS FOR REMOVAL AND INSTALLATION

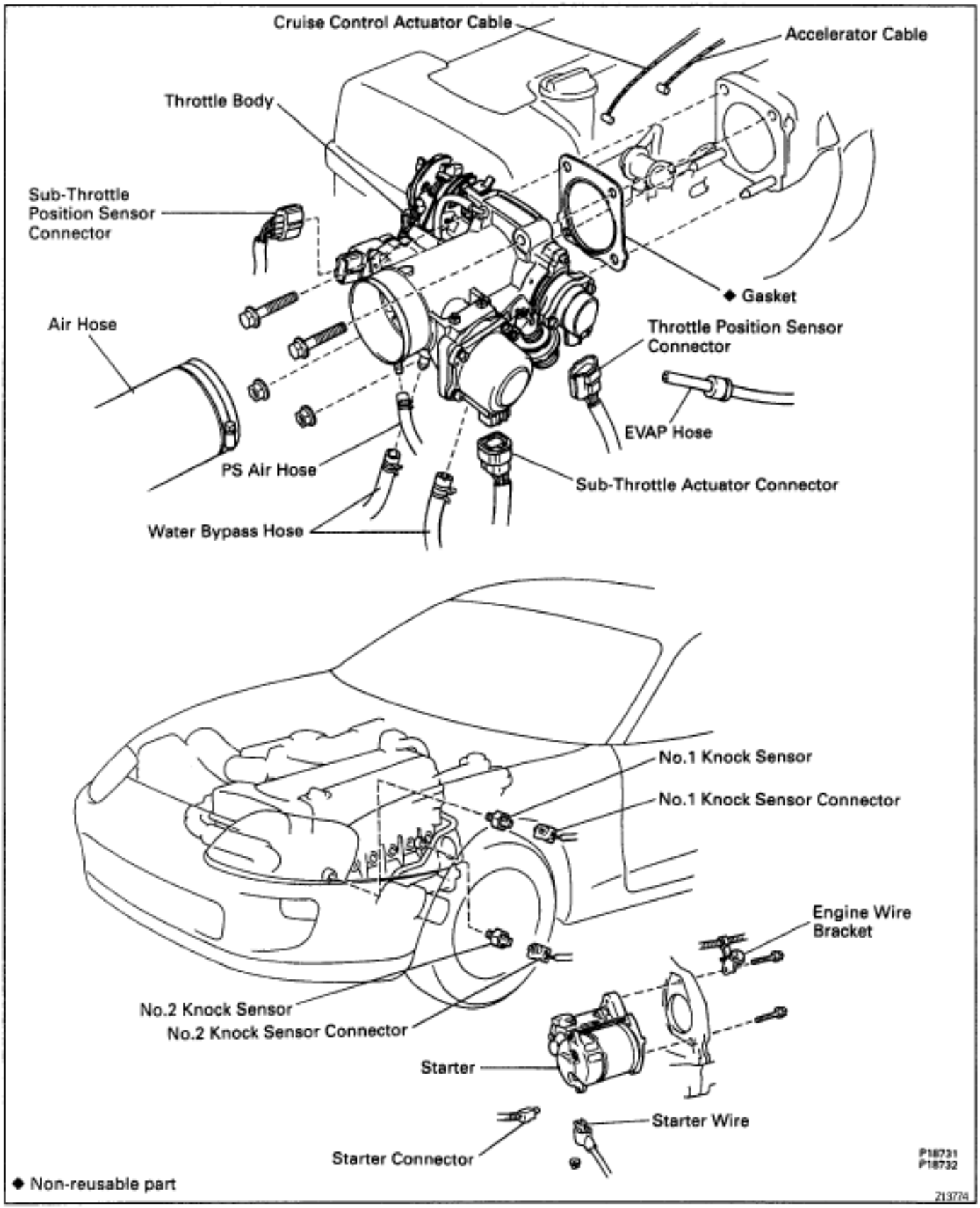

KNOCK SENSORS INSPECTION

1. REMOVE THROTTLE BODY
(See throttle body removal)

2. REMOVE STARTER
(See starter removal in Starting System)

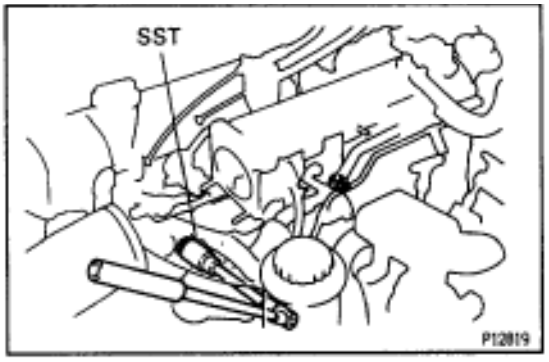

3. REMOVE KNOCK SENSORS

(a) Disconnect the knock sensor connector.

(b) Using SST, remove the knock sensor.
SST 09816–30010

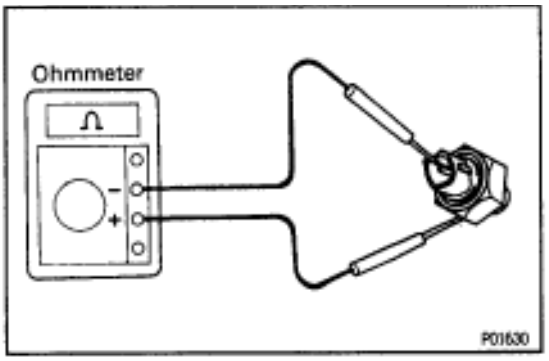

4. INSPECT KNOCK SENSORS

Using an ohmmeter, check that there is no continuity between the terminal and body.
If there is continuity, replace the sensor.

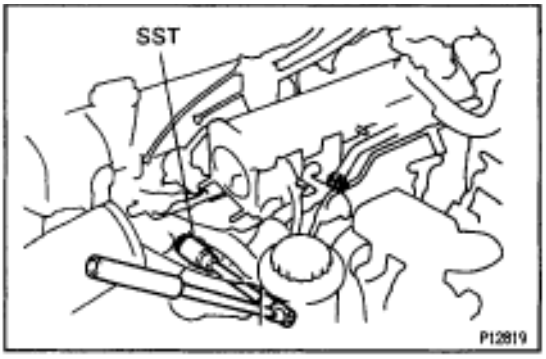

5. REINSTALL KNOCK SENSORS

(a) Using SST, install the knock sensor.
SST 09816–30010
Torque: 44 N·m (450 kgf·cm, 33 ft·lbf)

(b) Connect the knock sensor connector.

6. REINSTALL STARTER
(See starter installation in Starting System)

7. REINSTALL THROTTLE BODY
(See throttle body installation)

OXYGEN SENSOR
Main Heated Oxygen Sensor
COMPONENTS FOR REMOVAL AND INSTALLATION

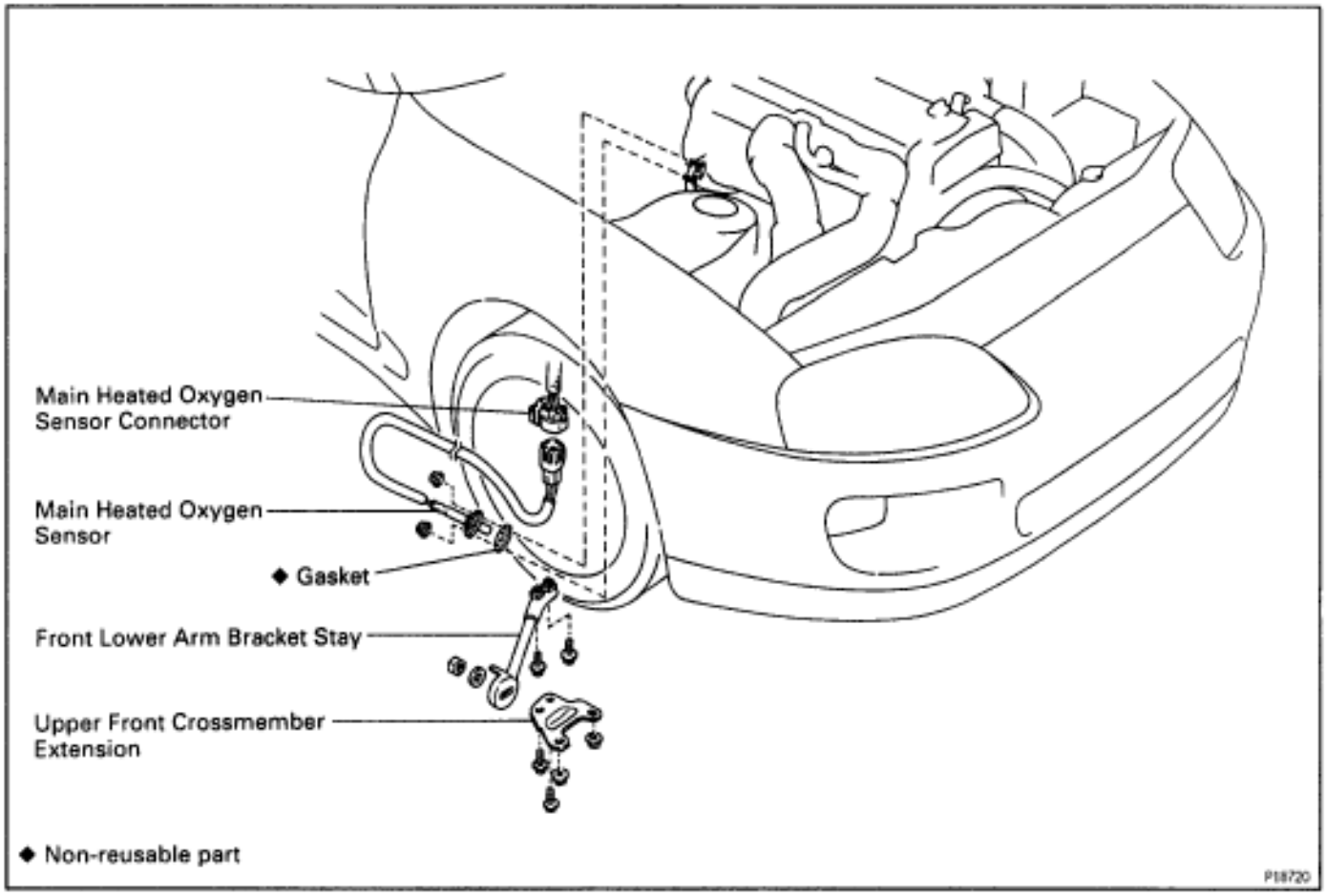

OXYGEN SENSOR INSPECTION

1. WARM UP ENGINE

Allow the engine to warm up to normal operating temperature.

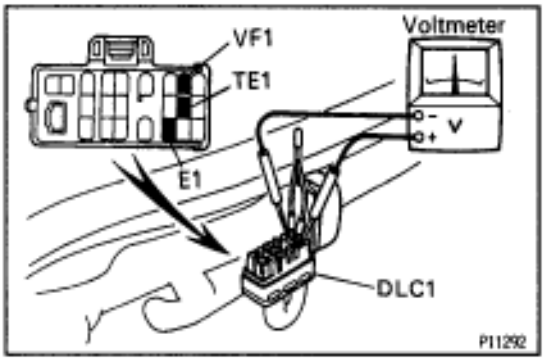

2. INSPECT FEEDBACK VOLTAGE

Connect the positive (+) tester probe of a voltmeter to terminal VF1 of the DLC1, and negative (–) tester probe to terminal E1. Do the test as described on the next page.

HINT: Use SST when connecting between terminals TE1 and E1 of the DLC1.

SST 09843–18020

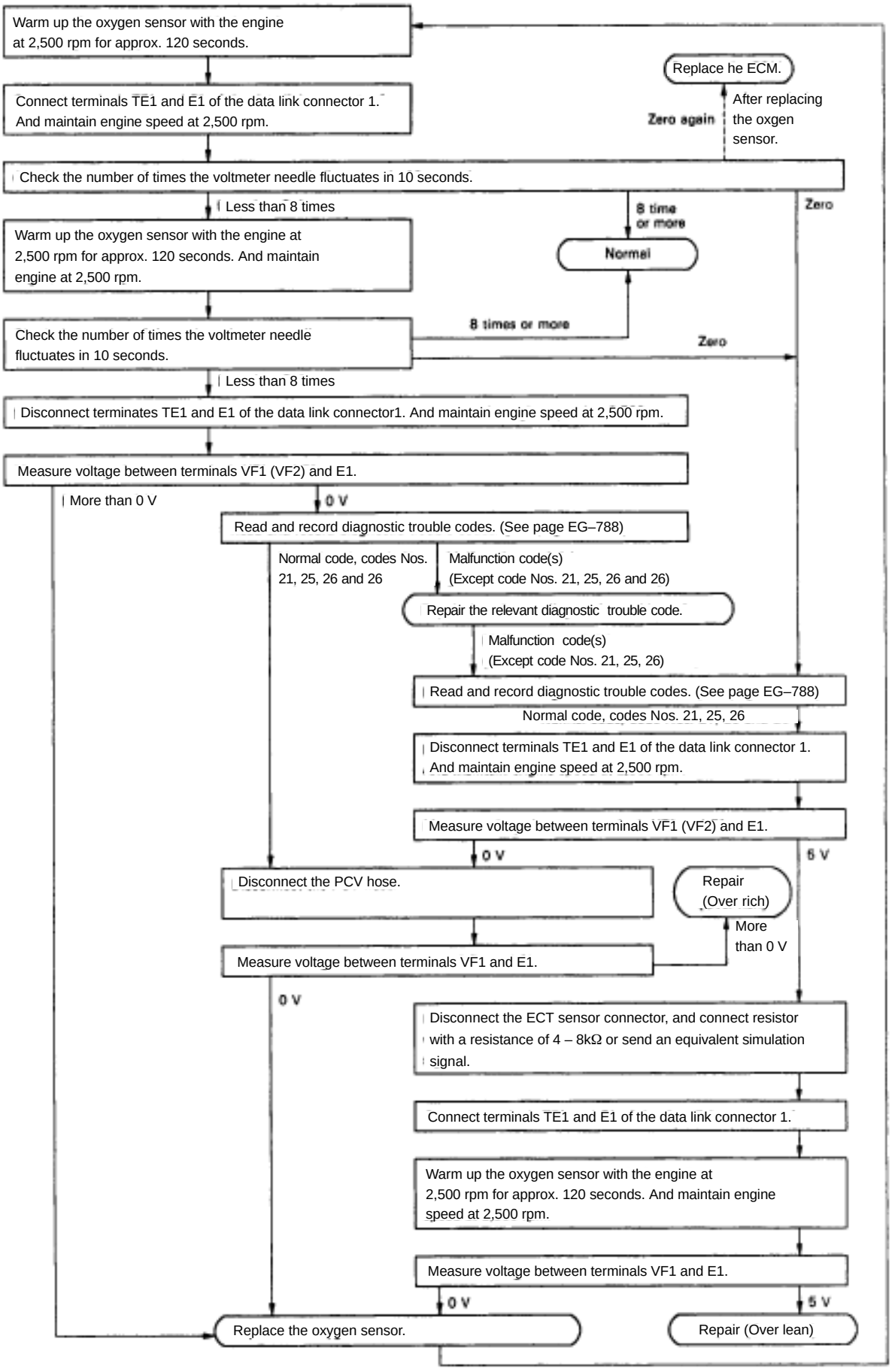
Warm up the oxygen sensor with the engine at 2,500 rpm for approx. 120 seconds.
Connect terminals TE1 and E1 of the data link connector 1. And maintain engine speed at 2,500 rpm.
Check the number of times the voltmeter needle fluctuates in 10 seconds.
Less than 8 times
8 time or more
Zero
Normal
Replace he ECM.
After replacing the oxgen sensor.
Zero again
Warm up the oxygen sensor with the engine at 2,500 rpm for approx. 120 seconds. And maintain engine at 2,500 rpm.
Check the number of times the voltmeter needle fluctuates in 10 seconds.
8 times or more
Zero
Less than 8 times
Disconnect terminates TE1 and E1 of the data link connector1. And maintain engine speed at 2,500 rpm.
Measure voltage between terminals VF1 (VF2) and E1.
More than 0 V
0 V
Read and record diagnostic trouble codes. (See page EG–788)
Normal code, codes Nos. 21, 25, 26 and 26
Malfunction code(s) (Except code Nos. 21, 25, 26 and 26)
Repair the relevant diagnostic trouble code.
Malfunction code(s) (Except code Nos. 21, 25, 26)
Read and record diagnostic trouble codes. (See page EG–788)
Normal code, codes Nos. 21, 25, 26
Disconnect terminals TE1 and E1 of the data link connector 1. And maintain engine speed at 2,500 rpm.
Measure voltage between terminals VF1 (VF2) and E1.
0 V
5 V
Disconnect the PCV hose.
Repair (Over rich)
More than 0 V
Measure voltage between terminals VF1 and E1.
0 V
Disconnect the ECT sensor connector, and connect resistor with a resistance of 4 – 8kΩ or send an equivalent simulation signal.
Connect terminals TE1 and E1 of the data link connector 1.
Warm up the oxygen sensor with the engine at 2,500 rpm for approx. 120 seconds. And maintain engine speed at 2,500 rpm.
Measure voltage between terminals VF1 and E1.
0 V
5 V
Replace the oxygen sensor.
Repair (Over lean)

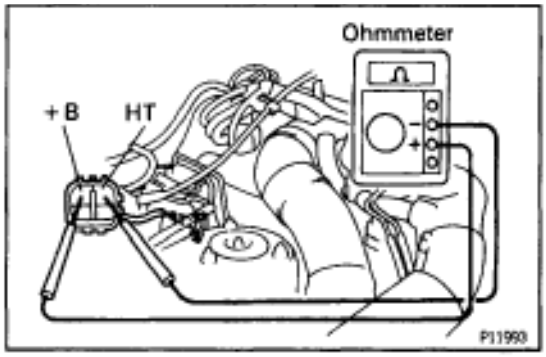

3. INSPECT HEATER RESISTANCE OF MAIN HEATED OXYGEN SENSOR

(a) Disconnect the oxygen sensor connector.

(b) Using an ohmmeter, measure the resistance between the terminals +B and HT.

Resistance:

At 20˚C (68˚F) 11–16 Ω

If the resistance is not as specified, replace the sensor.

Torque: 20 N·m (200 kgf·cm, 14 ft·lbf)

(c) Reconnect the oxygen sensor connector.

Sub Heated Oxygen Sensor
COMPONENTS FOR REMOVAL AND INSTALLATION

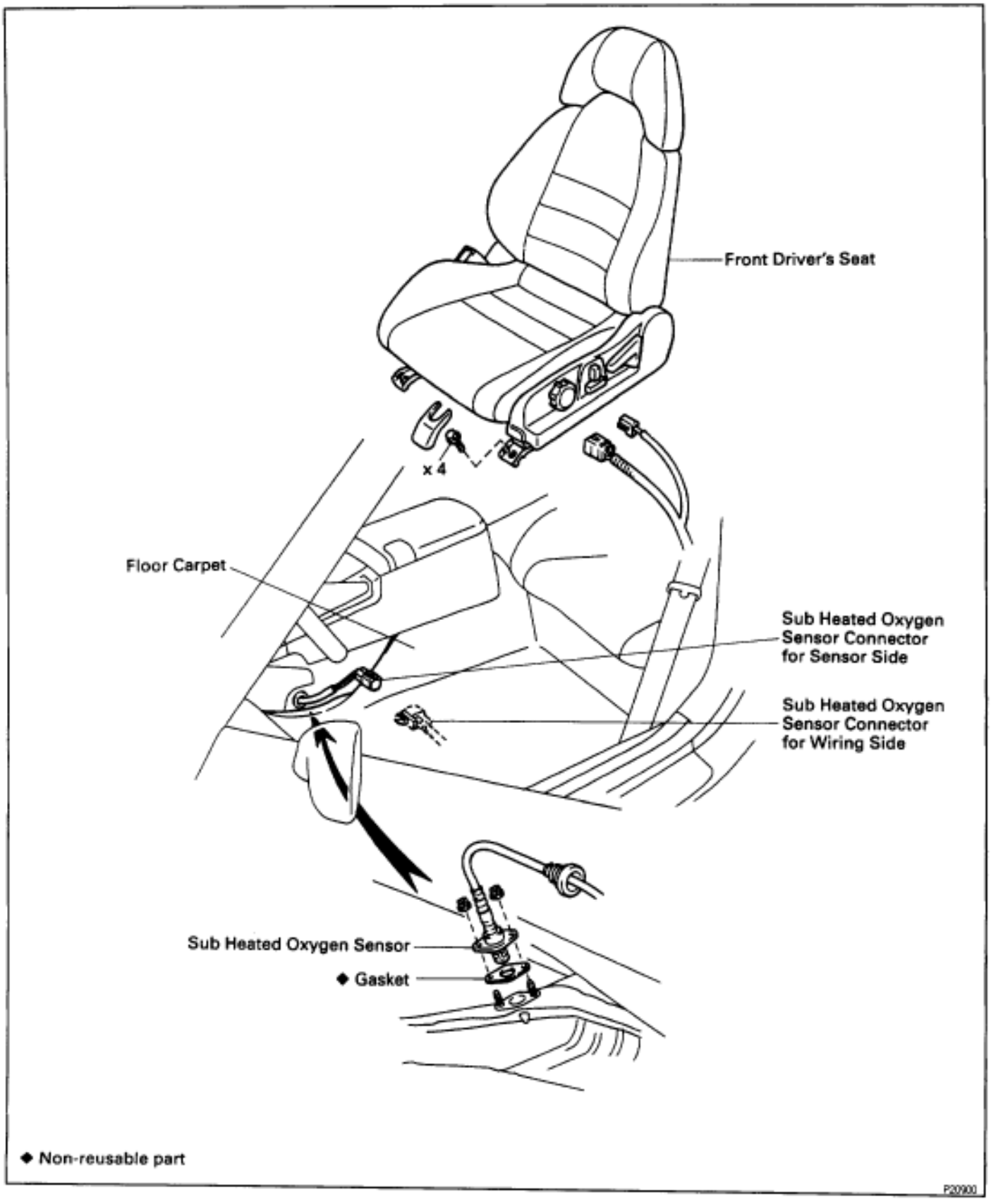

OXYGEN SENSOR INSPECTION

1. INSPECT OPERATION OF SUB HEATED OXYGEN SENSOR

(See circuit inspection in Engine Troubleshooting)

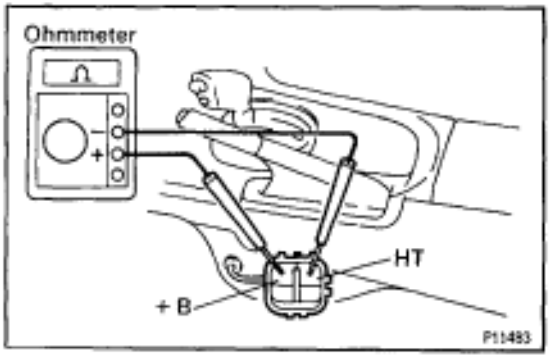

2. INSPECT HEATER RESISTANCE OF SUB HEATED OXYGEN SENSOR

(a) Remove the driver's seat.
(b) Take out the console box side of the floor carpet.
(c) Disconnect the oxygen sensor connector.
(d) Using an ohmmeter, measure the resistance between the terminals +B and HT.

Resistance:

At 20˚C (68˚F) 11–16 Ω

If the resistance is not as specified, replace the sensor.

Torque: 20 N·m (200 kgf·cm, 14 ft·lbf)

(e) Reconnect the oxygen sensor connector.
(f) Reinstall the floor carpet.
(g) Reinstall the driver's seat.

FUEL PUMP ECU
COMPONENTS FOR REMOVAL AND INSTALLATION

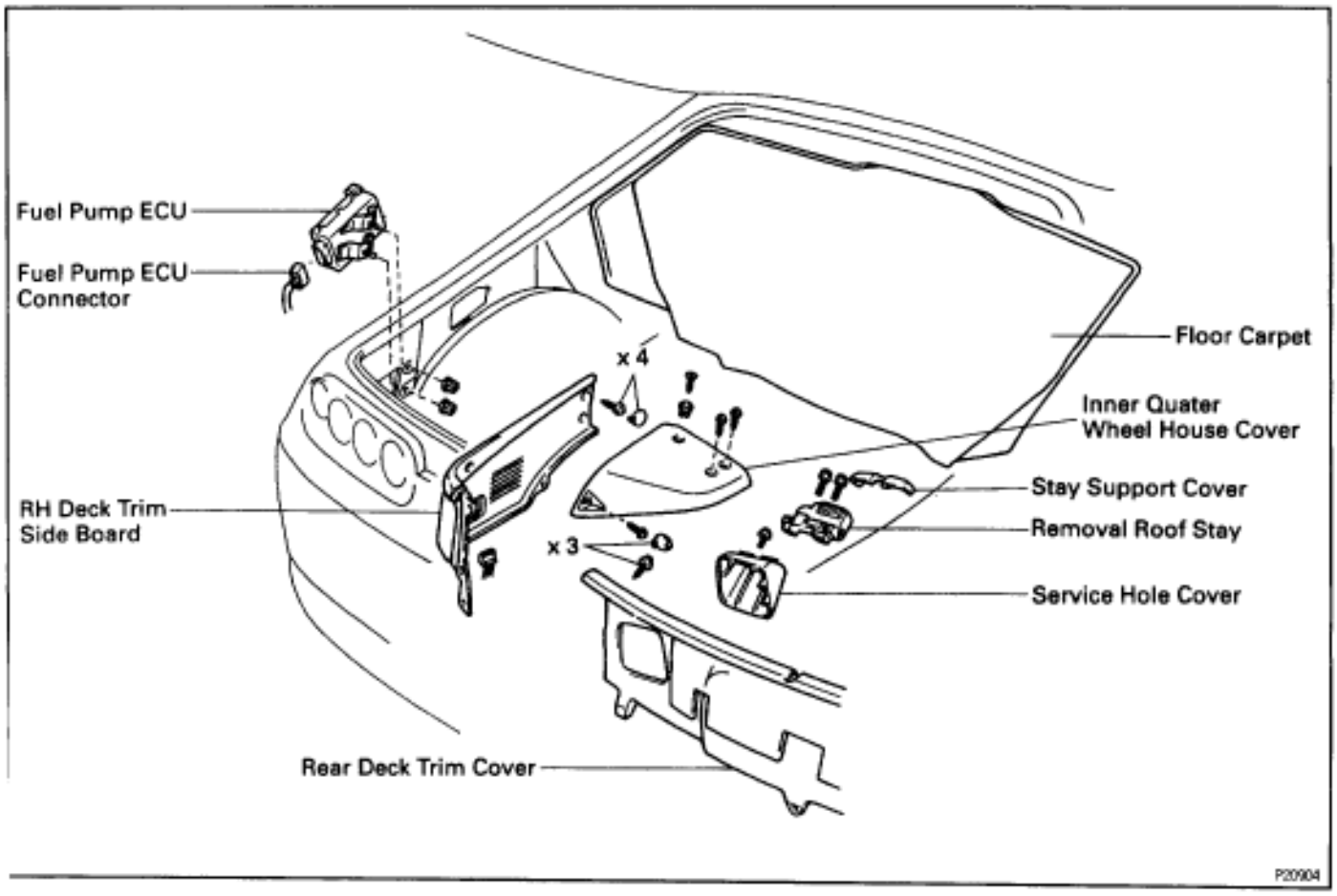

FUEL PUMP ECU INSPECTION

1. **REMOVE FUEL PUMP ECU**
2. **INSPECT FUEL PUMP ECU**
   (See circuit inspection in Engine Troubleshooting)
3. **REINSTALL FUEL PUMP ECU**

ENGINE CONTROL MODULE (ECM) COMPONENTS FOR REMOVAL AND INSTALLATION

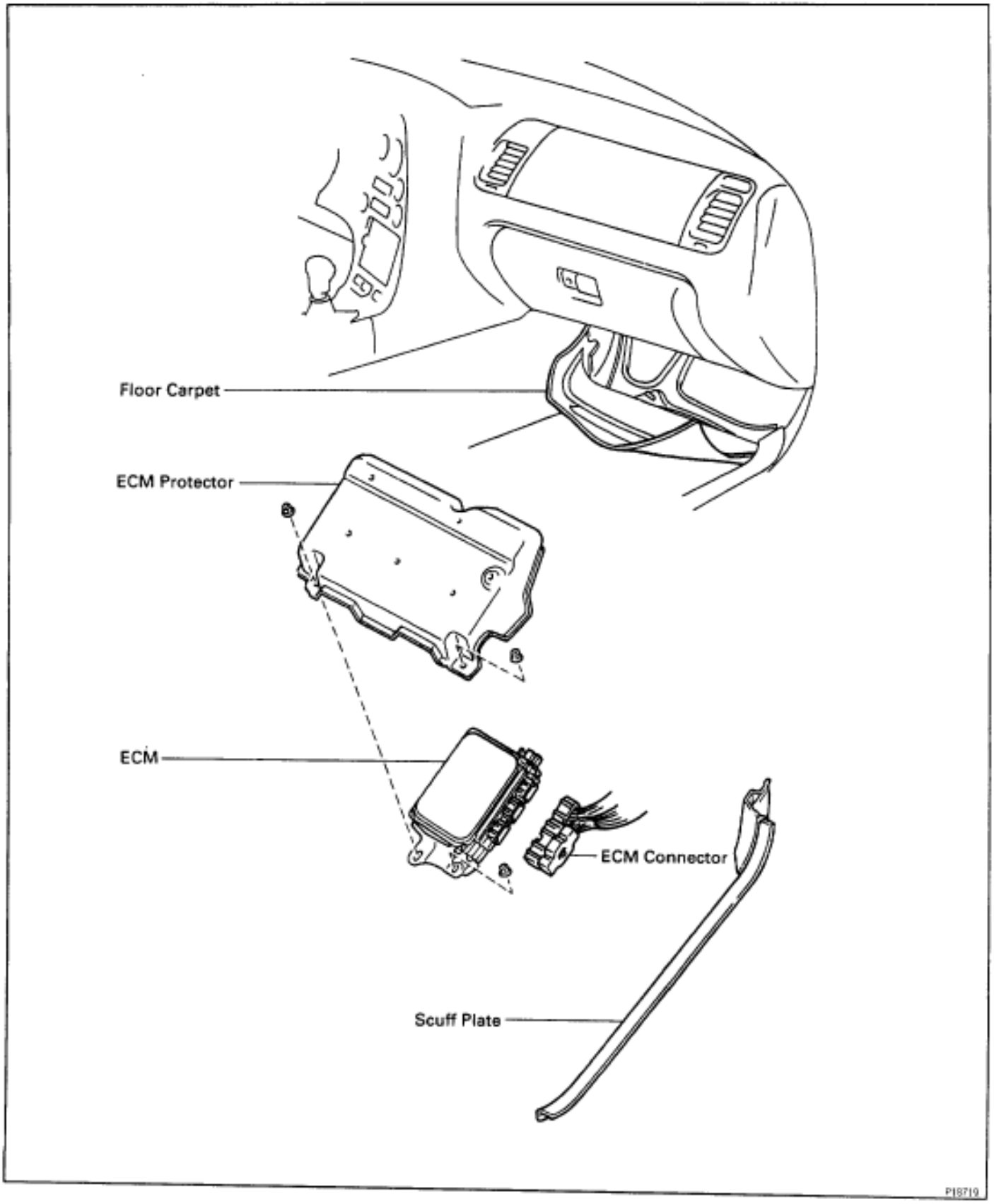

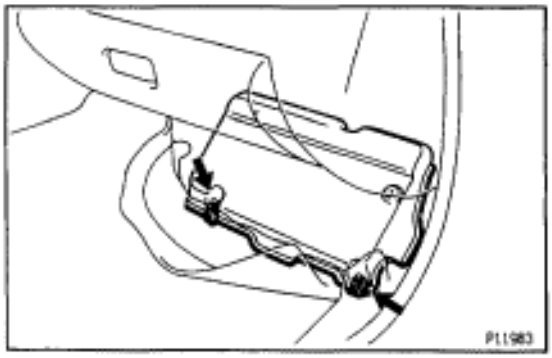

ECM INSPECTION

1. DISCONNECT NEGATIVE (–) TERMINAL CABLE FROM BATTERY

2. REMOVE SCUFF PLATE

3. REMOVE ECM PROTECTOR

(a) Take out the front side of the floor carpet.

(b) Remove the 2 nuts and ECM protector.

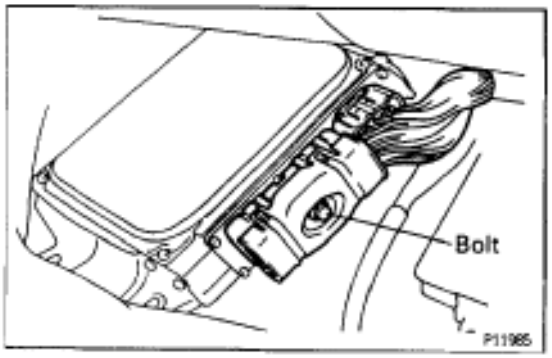

4. REMOVE ECM

(a) Remove the nut, and disconnect the ECM from the floor panel.

(b) Fully loosen the bolt and disconnect the 2 ECM connectors, and remove the ECM.

5. INSPECT ECM

(See standard value of ECM terminals in Engine Troubleshooting)

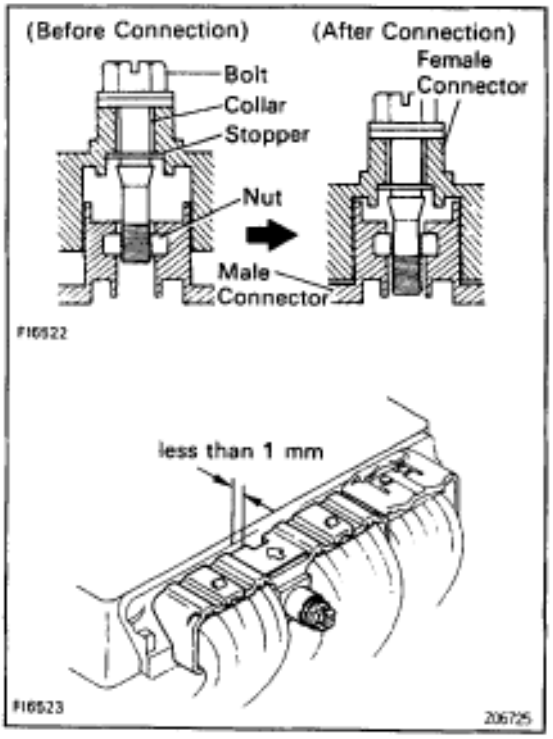

6. REINSTALL ECM

(a) Connect the 2 ECM connectors.

- Match the male connector correctly with the female connector, then press them together.
- Tighten the bolt.
  Make sure the connector is completely connected by tightening the bolt until there is a clearance of less than 1 mm (0.04 in.) between the bottom of the male connector and the end of the female connector.

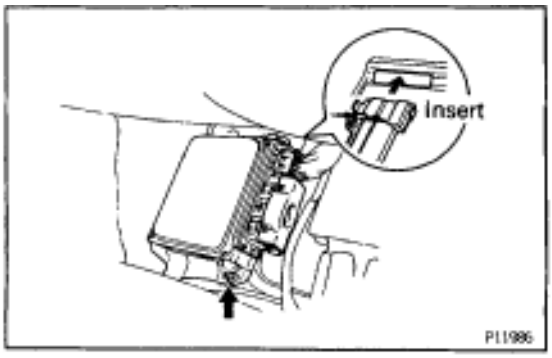

(b) Install the ECM with the nut.

7. REINSTALL ECM PROTECTOR

8. REINSTALL SCUFF PLATE

9. RECONNECT NEGATIVE (–) TERMINAL CABLE TO BATTERY

FUEL CUT RPM
FUEL CUT RPM INSPECTION

1. WARM UP ENGINE

Allow the engine to warm up to normal operating temperature.

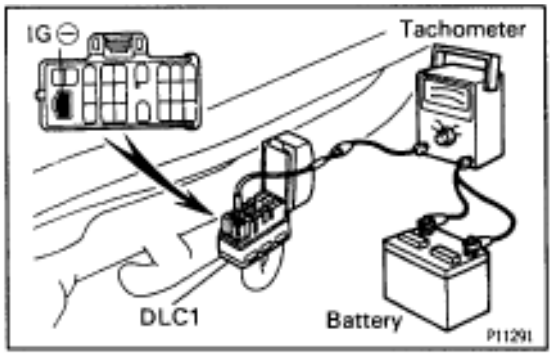

2. CONNECT TACHOMETER TO ENGINE

Connect the tester probe of a tachometer to terminal IG⊖ of the DLC1.

NOTICE:

- **Never allow the tachometer terminal to touch ground as it could result in damage to the igniter and/or ignition coil.**
- **As some tachometers are not compatible with this ignition system, we recommend that you confirm the compatibility of your unit before use.**

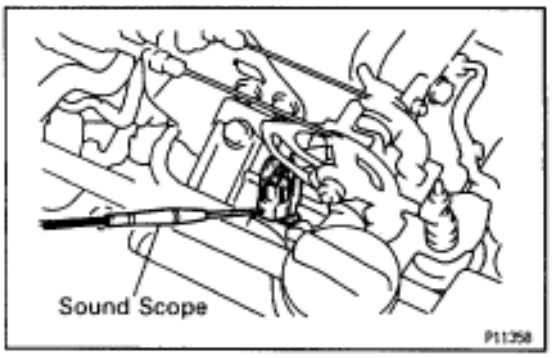

3. INSPECT FUEL CUTOFF OPERATION

(a) Increase the engine speed to at least 3,000 rpm.

(b) Check for injector operating noise.

(c) Check that when the throttle lever is released, injector operation noise stops momentarily and then resumes.

HINT: Measure with the A/C OFF.

Fuel return speed:

1,400 rpm
(Vehicle speed less than 25 km/h (16mph), with brake OFF)

4. DISCONNECT TACHOMETER

SERVICE SPECIFICATIONS
SERVICE DATA

Fuel pressure regulator	Fuel pressure	at no vacuum	226–275 kPa (2.3–2.8 kgf/cm^2, 33–40 psi)
Fuel pump	Resistance	at 20°C (68°F)	0.1–3.0 Ω
Injector	Resistance Injection volume Difference between each cylinder Fuel leakage		Approx. 1.95 Ω 124–144 cm^3 (7.6–8.8 cu in.) per 15 sec. 10 cm^3 (0.6 cu in.) or less One drop or less per minute
MAF meter	Resistance (THA–E2)	at –20°C (–4°F) at 0°C (32°F) at 20°C (68°F) at 40°C (104°F) at 60°C (140°F)	10–20 kΩ 4–7 kΩ 2–3 kΩ 0.9–1.3 kΩ 0.4–0.7 k Ω
Throttle body	Throttle body fully closed angle Dashpot setting speed Throttle opener setting speed		10° 2,300 ± 400 rpm 1,500 ± 200 rpm
Throttle position sensor	Clearance between stop screw and lever 0 mm (0 in.) 0.40 mm (0.016 in.) 0.60 mm (0.024 in.) Throttle valve fully open –	 VTA–E2 IDL–E2 IDL–E2 VTA–E2 VC–E2	 0.34–6.3 kΩ 0.5 kΩ or less Infinity 2.4–11.2 kΩ 3.1–7.2 kΩ
Sub–throttle position sensor	Clearance between stop screw and lever 0 mm (0 in.) 0.30 mm (0.012 in.) 0.50 mm (0.020 in.) Throttle valve fully open –	 VTA–E2 IDL–E2 IDL–E2 VTA–E2 VC–E2	 0.3–6.3 kΩ 0.5 kΩ or less Infinity 2.0–10.8 kΩ 3.5–6.5 kΩ
Sub–throttle actuator	Resistance	ACM–A and A–, BCM–B and B–	0.82–0.98 Ω
IAC valve	Resistance	B1 (or B2)–Others	18–24 Ω
Solenoid resistor	Resistance	+B–Others	Approx. 6 Ω
VSV for Fuel pressure control	Resistance	at 20°C (68°F)	33–39 Ω
VSV for intake air control valve	Resistance	at 20°C (68°F)	38.5–44.5 Ω
VSV for exhaust gas control valve	Resistance	at 20°C (68°F)	38.5–44.5 Ω
VSV for waste gate valve	Resistance	at 20°C (68°F)	22–26 Ω
VSV for exhaust bypass valve	Resistance	at 20°C (68°F)	22–26 Ω

VSV for EVAP	Resistance	at 20˚C (68˚F)	30–34 Ω
VSV for EGR	Resistance	at 20˚C (68˚F)	30–34 Ω
ECT sensor	Resistance	at –20˚C (–4˚F)	10–20 kΩ
		at 0˚C (32˚F)	4–7 kΩ
		at 20˚C (68˚F)	2–3 kΩ
		at 40˚C (104˚F)	0.9–1.3 kΩ
		at 60˚C (140˚F)	0.4–0.7 kΩ
		at 80˚C (176˚F)	0.2–0.4 kΩ
EGR gas temperature sensor	Resistance	at 50˚C (122˚F)	64–97 kΩ
		at 100˚C (212˚F)	11–16 kΩ
		at 150˚C (302˚F)	2–4 kΩ
Main heated oxygen sensor	Heater coil resistance	at 20˚C (68˚F)	11–16 Ω
Sub heated oxygen sensor	Heater coil resistance	at 20˚C (68˚F)	11–16 Ω
Fuel cut rpm	Fuel return rpm		1,100 rpm

TORQUE SPECIFICATIONS

Part tightened		N·m	kgf·cm	ft·lbf
Fuel line for	union bolt	29	300	22
	for flare nut	30	310	22
Fuel pressure regulator x Delivery pipe		8.8	90	78 in.·lbf
Delivery pipe x Intake manifold		21	210	15
Injector holder x Delivery pipe		7.8	80	69 in.·lbf
Fuel inlet pipe x Delivery pipe		41	420	30
Fuel return pipe x Fuel pressure regulator		27	280	20
Air intake chamber x Intake manifold		27	280	20
Manifold stay x Air intake chamber		39	400	29
Manifold stay x Cylinder head		39	400	29
EGR pipe x Cylinder head		27	270	20
EGR pipe x EGR valve		64	650	47
Control cable bracket x Air intake chamber		19	195	14
Air intake chamber stay x Intake manifold		19	195	14
Air intake chamber stay x Control cable bracket		19	195	14
Fuel pressure pulsation damper x Fuel pipe support		41	420	30
	for SST	35	350	25
Fuel tank band x Body		39	400	29
MAF meter x Air cleaner case		6.9	70	61 in.·lbf
Throttle body x Air intake chamber		21	210	15
IAC valve x Air intake chamber		21	210	15
EGR gas temperature sensor x EGR valve		20	200	14
Knock sensor x Cylinder block		44	450	33
Main heated oxygen sensor x Exhaust manifold		20	200	14
Sub heated oxygen sensor x Center exhaust pipe		20	200	14
Upper front crossmember extension x Front suspension	Bolt	29	300	22
	Nut	33	340	25
Front lower arm bracket stay x Front suspension	Bolt	44	450	33
	Nut	59	600	43

2JZ–GE ENGINE TROUBLESHOOTING

HOW TO PROCEED WITH TROUBLESHOOTING

Troubleshoot in accordance with the procedure on the following pages.

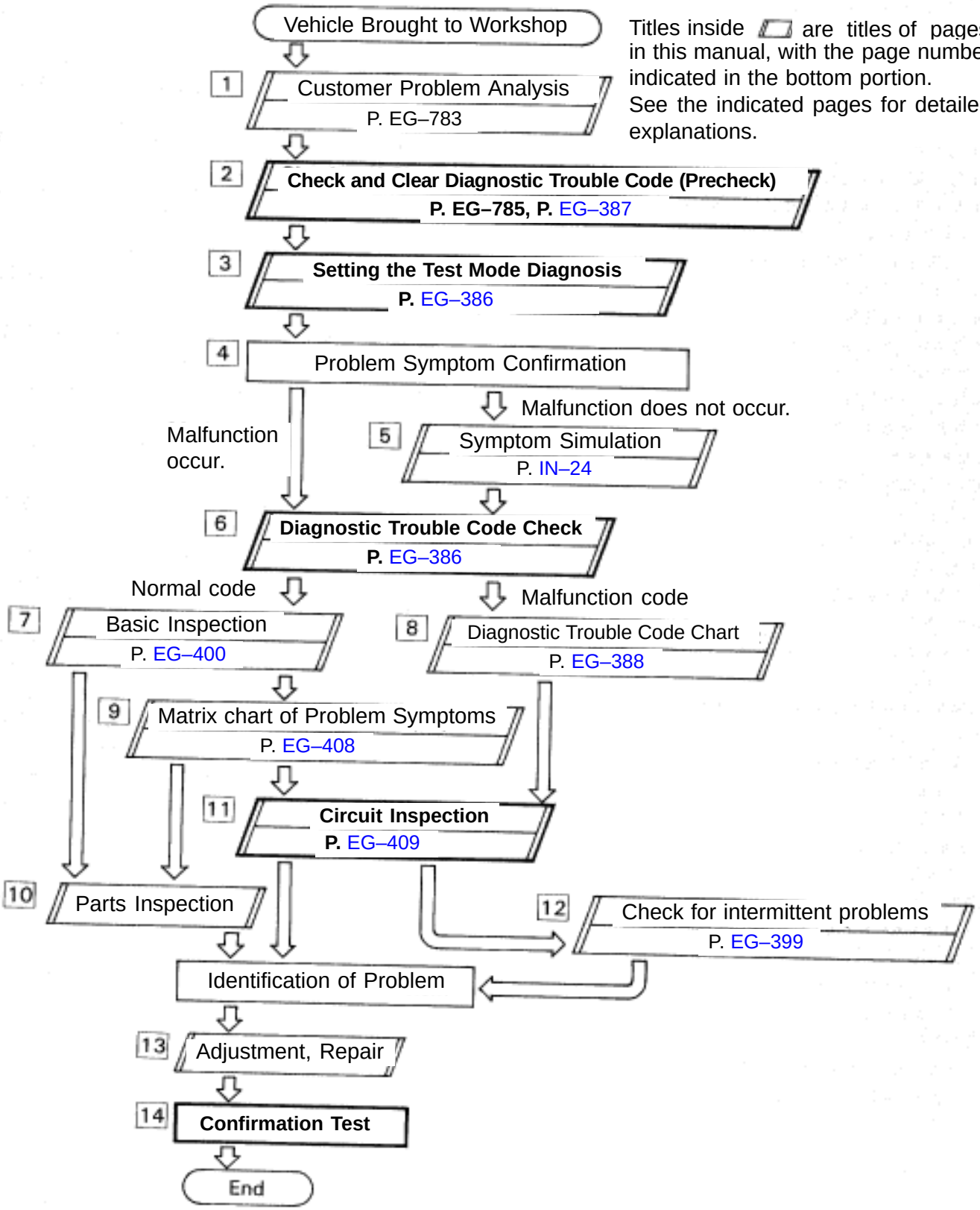

Titles inside ▱ are titles of pages in this manual, with the page number indicated in the bottom portion. See the indicated pages for detailed explanations.

Step [2], [3], [6], [11], [14]: Diagnostic steps permitting the use of the TOYOTA hand–held tester or TOYOTA break–out–box.

CUSTOMER PROBLEM ANALYSIS CHECK SHEET

ENGINE CONTROL System Check Sheet

Inspector's Name :

Customer's Name		Registration No.	
		Registration Year	/ /
		Frame No.	
Date Vehicle Brought In		Odometer Reading	km Miles

Date Problem Occurred		
Frequency Problem Occurs		◻ Constant ◻ Sometimes (times per day/month) ◻ Once only ◻ Other ( )
Conditions When Problem Occurres	Weather	◻ Fine ◻ Cloudy ◻ Rainy ◻ Snowy ◻ Various/Other ( )
	Outdoor Temperature	◻ Hot ◻ Warm ◻ Cool ◻ Cold (Approx. °F(°C))
	Place	◻ Highway ◻ Suburbs ◻ Inner City ◻ Hill (◻ Up, ◻ Down) ◻ Rough road ◻ Other ( )
	Engine Temp.	◻ Cold ◻ Warming up ◻ After warming up ◻ Any temp. ◻ Other ( )
	Engine Operation	◻ Starting ◻ Just after starting ◻ Idling ◻ Racing without load ◻ Driving (◻ Constant speed ◻ Acceleration ◻ Deceleration ◻ Other ( ))

Problem Symptoms	◻ Engine does not Start	◻ Engine does not crank ◻ No initial combustion ◻ No complete combustion
	◻ Difficult to Start	◻ Engine cranks slowly ◻ Other ( )
	◻ Poor Idling	◻ Incorrect first idle ◻ Idling rpm is abnormal [◻ High ◻ Low (rpm)] ◻ Rough idling ◻ Other ( )
	◻ Poor Driveability	◻ Hesitation ◻ Back fire ◻ Muffler explosion (after fire) ◻ Surging ◻ Knocking ◻ Other ( )
	◻ Engine Stall	◻ Engine stall soon after starting ◻ After accelerator pedal depressed ◻ After accelerator pedal released ◻ During A/C operation ◻ When N to D shift ◻ Other ( )
	◻ Others	

Condition of Malfunction Indicator Lamp		◻ Remains on ◻ Sometimes lights up ◻ Does not light up
Diagnostic Trouble Code Inspection	Normal Mode (Precheck)	◻ Normal code ◻ Malfunction code [code]
	Test Mode	◻ Normal code ◻ Malfunction code [code]



DIAGNOSIS SYSTEM

DESCRIPTION

The ECM contains a built–in self–diagnosis system by which troubles with the engine signal network are detected and a Malfunction Indicator Lamp on the instrument panel lights up.

By analyzing various signals as shown in a later table (See page EG–388) the Engine Control Module (ECM) detects system malfunctions relating to the sensors or actuators.

In the normal mode, the self–diagnosis system monitors 18 (California specification vehicles) or 17 (except for California and Canadian specification) items, indicated by code No. as shown in EG–388. A malfunction indicator lamp informs the driver that a malfunction has been detected. The lamp goes off automatically when the malfunction has been repaired, but the diagnostic trouble code(s) remains stored in the ECM memory (except for code Nos. 16 and 53). The ECM stores the code(s) until it is cleared by removing the EFI No. 1 fuse with the ignition switch OFF.

The diagnostic trouble code can be read by the number of blinks of the malfunction indicator lamp when TE1 and E1 terminals on the data link connector 1 or 2 are connected. When 2 or more codes are indicated, the lowest number (code) will appear first.

In the test mode, 12 (California specification vehicles) or 11 (except for California and Canadian specification vehicles) items, indicated by code No. as shown in EG–388 are monitored. If a malfunction is detected in any one of the systems indicated by code Nos. 13, 21, 22, 24, 25, 26, 27, 28, 35, 41, 71 and 78 (California specification vehicles) or 13, 21, 22, 24, 25, 28, 35, 41, 71 and 78 (except for California and Canadian specification vehicles) the ECM lights the malfunction indicator lamp to warn the technician that a malfunction has been detected. In this case, TE2 and E1 terminals on the data link connector 2 should be connected as shown later. (See page EG–386).

In the test mode, even if the malfunction is corrected, the malfunction code is stored in the ECM memory even when the ignition switch OFF (except code Nos. 43 and 51). This also applies in the normal mode. The diagnostic trouble mode (normal or test) and the output of the malfunction indicator lamp can be selected by connecting the TE1, TE2 and E1 terminals on the data link connector 2, as shown later.

A test mode function has been added to the functions of the self–diagnosis system of the normal mode for the purpose of detecting malfunctions such as poor contact, which are difficult to detect in the normal mode. This function fills up the self–diagnosis system. The test mode can be implemented by the technician following the appropriate procedures of check terminal connection and operation described later. (See page EG–386)

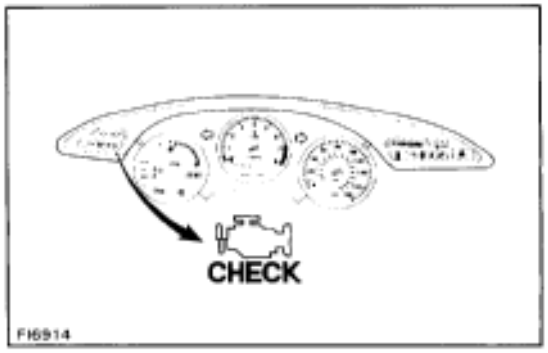

Diagnosis Inspection (Normal Mode)

MALFUNCTION INDICATOR LAMP CHECK

1. The Malfunction Indicator Lamp will come on when the ignition switch is turned ON and the engine is not running.
   HINT: If the malfunction indicator lamp does not light up, proceed to troubleshooting of the telltale light RH
   (See page BE–48).
2. When the engine is started, the malfunction indicator lamp should go off.
   If the light remains on, the diagnosis system has detected a malfunction or abnormality in the system.

DIAGNOSTIC TROUBLE CODE CHECK

1. Turn ignition switch ON.
2. Using SST, connect terminals between TE1 and E1 of data link connector 1 or 2.
   SST 09843–18020

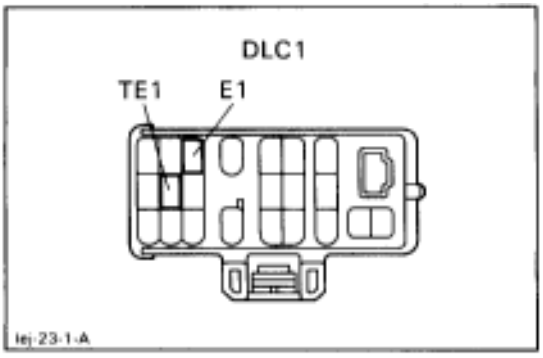

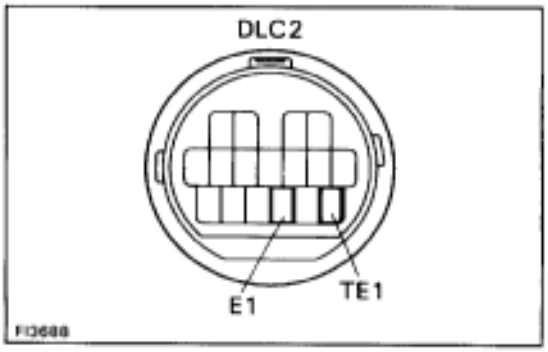

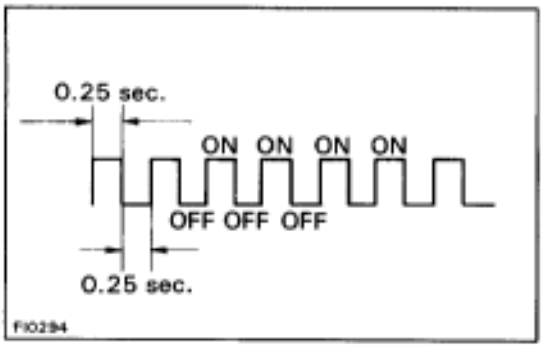

3. Read the diagnostic trouble code from malfunction indicator lamp.
   HINT: If a diagnostic trouble code is not output, check the TE1 terminal circuit (See page EG–484).

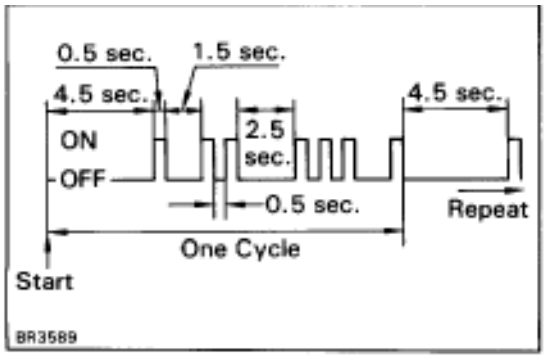

   As an example, the blinking patterns for codes; normal, 12 and 31 are as shown on the illustration.
4. Check the details of the malfunction using the diagnostic trouble code table on page EG–388.
5. After completing the check, disconnect terminals TE1 and E1, and turn off the display.
   HINT: In the event of 2 or more malfunction codes, indication will begin from the smaller numbered code and continue in order to the larger.

Diagnosis Inspection (Test Mode)

Compared to the normal mode, the test mode has an increased sensing ability to detect malfunctions.

It can also detect malfunctions in the starter signal circuit, the IDL contact signal of the throttle position sensor, air conditioning signal and park/neutral position switch signal.

Furthermore, the same diagnostic items which are detected in the normal mode can also be detected in the test mode.

DIAGNOSTIC TROUBLE CODE CHECK

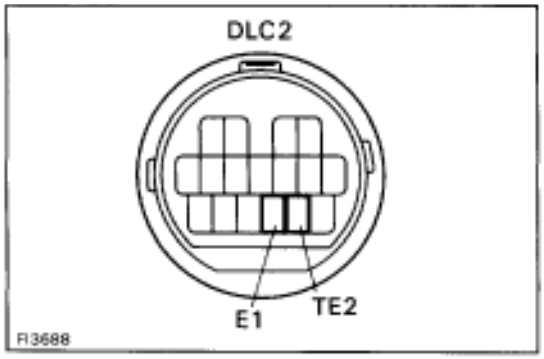

1. Initial conditions.
   (a) Battery voltage 11 V or more
   (b) Throttle valve fully closed
   (c) Transmission in neutral position
   (d) Air conditioning switched OFF
2. Turn ignition switch OFF
3. Using SST, connect terminals TE2 and E1 of the data link connector 2.
   SST 09843–18020

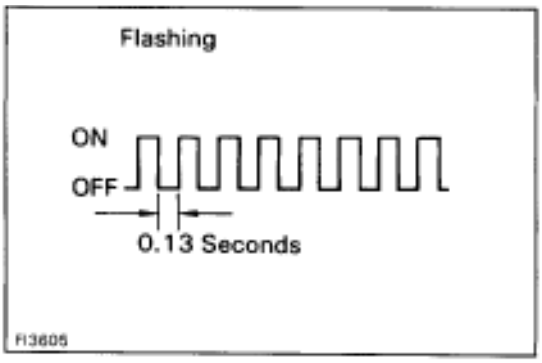

4. Turn ignition switch ON.
   HINT:
   - To confirm that the test mode is operating, check that the malfunction indicator lamp flashes when the ignition switch is turned to ON.
   - If the malfunction indicator lamp does not flash, proceed to troubleshooting of the TE2 terminal circuit on page EG–484.
5. Start the engine.
6. Simulate the conditions of the malfunction described by the customer.

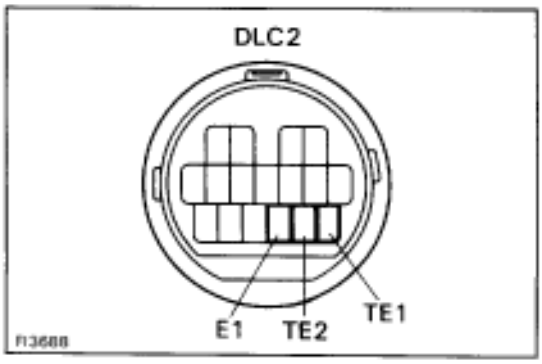

7. After the road test, using SST, connect terminals TE1 and E1 of the data link connector 2.
   SST 09843–18020
8. Read the diagnostic trouble code on malfunction indicator lamp on the telltale light RH (See page EG–385).
9. After completing the check, disconnect terminals TE1, TE2 and E1, and turn off the display.
   HINT:
   - The test mode will not start if terminals TE2 and E1 are connected after the ignition switch is turned ON.
   - When the engine is not cranked, diagnostic trouble codes ”43” (Starter signal) output, but this is not abnormal.
   - When the automatic transmission shift lever is in the ”D”, ”2”, ”L” or ”R” shift position, or when the air conditioning is on or when the accelerator pedal is depressed, code ”51” (Switch condition signal) is output, but this is not abnormal.

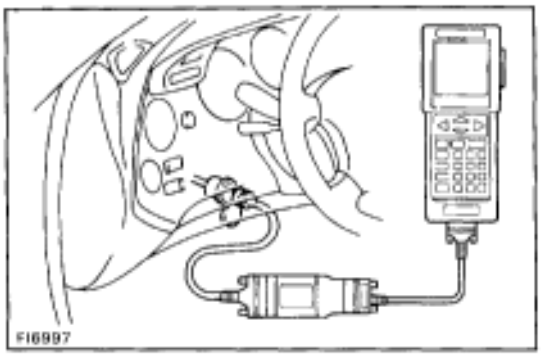

DIAGNOSTIC TROUBLE CODE CHECK USING TOYOTA HAND–HELD TESTER

1. Hook up the TOYOTA hand–held tester to the DLC2.
2. Read the diagnostic trouble codes by following the prompts on the tester screen.
   Please refer to the TOYOTA hand–held tester operation's manual for further details.

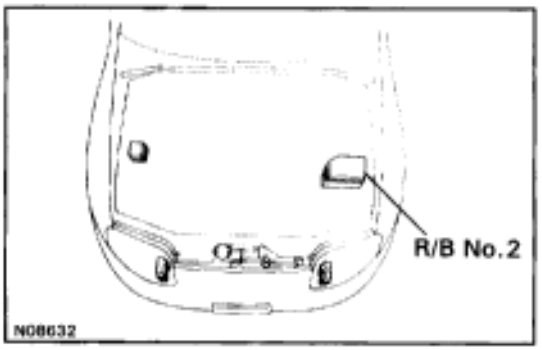

DIAGNOSTIC TROUBLE CODE CLEARANCE

1. After repair of the trouble areas, the diagnostic trouble code retained in the ECM memory must be cleared out by removing the EFI No.1 fuse (30A) from R/B No.2 for 10 seconds or more, with the ignition switch OFF.
   HINT:
   - Cancellation can also be done by removing the negative (–) terminal cable from the battery, but in this case, other memory systems (clock, etc.) will also be cancelled out.
   - If it is necessary to work on engine components requiring removal of the negative (–) terminal cable from the battery, a check must first be made to see if a diagnostic trouble code has been recorded.
2. After cancellation, road test the vehicle to check that a normal code is now read on the malfunction indicator lamp.
   If the same diagnostic trouble code appears, it indicates that the trouble area has not been repaired thoroughly.

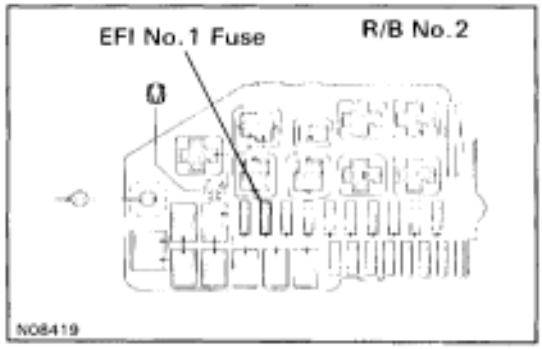

ECM DATA MONITOR USING TOYOTA HAND–HELD TESTER

1. Hook up the TOYOTA hand–held tester to the DLC2.
2. Monitor the ECM data by following the prompts on the tester screen.

HINT: TOYOTA hand–held tester has a "Snapshot" function which records the monitored data.
Please refer to TOYOTA hand–held tester operator's manual for further details.

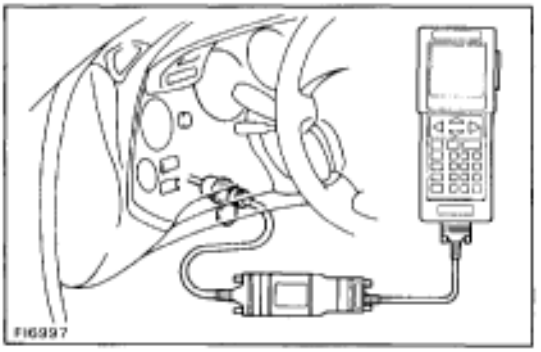

ECM TERMINAL VALUES MEASUREMENT USING TOYOTA BREAK–OUT–BOX AND TOYOTA HAND–HELD TESTER

1. Hook up the TOYOTA break–out–box and TOYOTA handheld tester to the vehicle.
2. Read the ECM input/output values by following the prompts on the tester screen.

HINT: TOYOTA hand–held tester has a "Snapshot" function. This records the measured values and is effective in the diagnosis of intermittent problems.
Please refer to TOYOTA hand–held tester/TOYOTA break–out box operator's manual for further details.

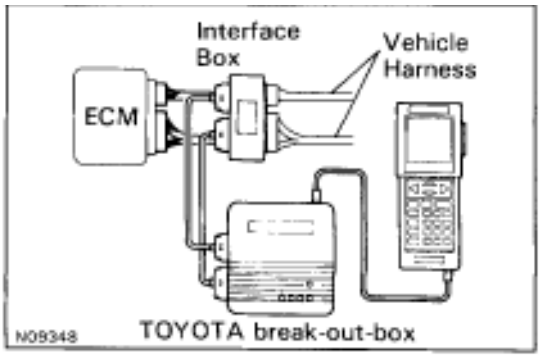

DIAGNOSTIC TROUBLE CODE CHART

HINT: Parameters listed in the chart may not be exactly the same as your reading due to type of the instruments or other factors.

DTC No.	Number of MIL Blinks	Circuit	Diagnostic Trouble Code Detecting Condition
–	 BE3931	Normal	No code is recorded.
12	 BE3931	G, NE Signal (No.1)	No NE or G1 and G2 signal to ECM for 2 sec. or more after cranking
			Open in "G ⊕" circuit
13	 BE3931	G, NE Signal (No.2)	No NE signal to ECM for 0.1 sec. or more at 1,000 rpm or more
			NE signal does not pulse 12 times to ECM during the interval between G1 and G2 pulses
14	 BE3931	Ignition Signal	No IGF signal to ECM for 6 consecutive IGT signals
16	 BE3931	A/T Control Signal	Fault in communications between the engine CPU and A/T CPU in the ECM
21	 BE3932	(Main heated *3) Oxygen Sensor Signal (Fr)	(1)*3 Open or short in heater circuit of main heated oxygen sensor (Fr) for 0.5 sec. or more
			(2) (Main heated*3) oxygen sensor (Fr) signal voltage is reduced to between 0.35 V and 0.70 V for 90 sec. under conditions (a) ~ (d): (2 trip detection logic)*4 (a) Engine coolant temp.: Between 80°C (176°F) and 95°C (203°F) (b) Engine speed: 1,500 rpm or more (c) Load driving (example A/T in in Overdrive, (5th for M/T), A/C ON, Flat road, 80 km/H (50 mph)) (d) (Main heated*3) oxygen sensor (Fr) signal voltage: Alternating above and below 0.45 V

*3, 4: See page EG–396, 397.

If a malfunction code is displayed during the diagnostic trouble code check in test mode, check the circuit for that code listed in the table below (Proceed to the page given for that circuit).

Trouble Area	Malfunction Indicator Lamp*1		Memory*2	See page
	Normal Mode	Test Mode		
———	–	–	———	———
• Open or short in NE, G circuit • Distributor • Open or short in STA circuit • ECM	ON	N.A.	○	EG–409
• Open or short in NE circuit • Distributor • ECM	ON	N.A.	○	EG–412
• Open or short in NE circuit • Distributor • ECM	N.A.	ON		
• Open or short in IGT or IGT circuit from igniter to ECM • Igniter • ECM	ON	N.A.	○	EG–413
• ECM	ON	N.A.	×	EG–418
• Open or short in heater circuit of main heated oxygen sensor (Fr) • Main heated oxygen sensor (Fr) heater • ECM	ON	N.A.	○	EG–419
• (Main heated*3) oxygen sensor (Fr) circuit • (Main heated*3) oxygen sensor (Fr)	ON	ON		

*1, 2, 3: See page EG–396

DTC No.	Number of MIL Blinks	Circuit	Diagnostic Trouble Code Detecting Condition
22	 BE3932	Engine Coolant Temp. Sensor Circuit	Open or short in engine coolant temp. sensor circuit for 0.5 sec. or more
24	 BE3932	Intake Air Temp. Sensor Signal	Open or short in intake air temp. sensor circuit for 0.5 sec. or more
25	 BE3932	Air–Fuel Ratio Lean Malfunction	(1) (Main heated*3) oxygen sensor voltage is 0.45 V or less (lean) for 90 sec. under conditions (a) and (b): (2 trip detection logic)*4 (a) Engine speed: 1,500 rpm or more (b) Engine coolant temp.: 70˚C (158˚F) or more
			(2)*3 Difference of air–fuel ratio feedback compensation value between front (no.1 ~ 3 cylinders) and rear (No.4 ~ 6 cylinders) is more tan 15 percentage for 20 sec. or more under conditions (a) and (b): (2 trip detection logic)*4 (a) Engine speed: 2,000 rpm or more (b) Engine coolant temp.: Between 60˚C (140˚F) and 95˚C (203˚F)
			(3)*3 Engine speed varies by more than 15 rpm over the preceding crank angle period during a period o 20 sec. or more under conditions (a) and (b): (2 trip detection logic)*4 (a) Engine speed: Idling (b) Engine coolant temp.: Between 60˚C (140˚F) and 95˚C (203˚F)

*3, 4: See page EG–396 397.

Trouble Area	Malfunction Indicator Lamp*1		Memory*2	See page
	Normal Mode	Test Mode		
• Open or short in engine coolant temp. sensor circuit • Engine coolant temp. sensor • ECM	ON	ON	○	EG–424
• Open or short in intake air temp. sensor circuit • Intake air temp. sensor • ECM	ON	ON	○	EG–426
• Open or short in (main heated*3) oxygen sensor circuit • (Main heated*3) oxygen sensor • Ignition system • ECM	ON	ON	○	EG–428
• Open or short in injector circuit • Fuel line pressure (injector leak, blockage) • Mechanical system malfunction (skipping teeth of timing belt) • Ignition system • Compression pressure (foreign object caught in valve) • Volume air flow meter (air intake) • ECM				
• Open or short in injector circuit • Fuel line pressure (injector leak, blockage) • Mechanical system malfunction (skipping teeth of timing belt) • Ignition system • Compression pressure (foreign object caught in valve) • Volume air flow meter (air intake) • ECM				

*1, 2, 3: See page EG–396.

DTC No.	Number of MIL Blinks	Circuit	Diagnostic Trouble Code Detecting Condition
26	 BE3932	Air–Fuel Ratio Rich Malfunction	(1) Difference of air–fuel ratio feedback compensation value between front (No.1 ~ 3 cylinders) and rear (No.4 ~ 6 cylinders) is more than 15 percentage for 20 sec. or more under conditions(a) and (b): (2 trip detection logic)*4 (a) Engine speed: 2,000 rpm or more (b) Engine coolant temp.: Between 60˚C (140˚F) and 95˚C (203˚F)
			(2) Engine speed varies by more than 15 rpm over the preceding crank angle period during a period o 20 sec. or more under conditions (a) and (b): (2 trip detection logic)*4 (a) Engine speed: 2,000 rpm or more (b) Engine coolant temp.: Between 60˚C (140˚F) and 95˚C (203˚F)
27*3	 BE3932	Sub Heated Oxygen Sensor Signal	(1) Open or short in heater circuit of sub heated oxygen sensor for 0.5 sec. or more
			(2) Main heated oxygen sensor signal is 0.45 V or more and sub oxygen sensor signal is 0.45 V or less under conditions (a) ~ (c): (2 trip detection logic)*4 (a) Engine coolant temp.: 80˚C (176˚F) or more (b) Engine speed: 1,500 rpm or more (c) Accel. pedal: Fully depressed for 2 sec. or more
28	 BE3932	(Main heated*3) Oxygen Sensor Signal (Rr)	(1)*3 Open or short in heater circuit of main heated oxygen sensor (Rr) for 0.5 sec. or more
			(2) (Main heated*3) oxygen sensor (Rr) signal voltage is reduced to between 0.35 V and 0.70 V for 90 sec. under conditions (a) ~ (d) (2 trip detection logic)*4 (b) Engine coolant temp.: Between 80˚C (176˚F) and 95˚C (203˚F) (b) Engine speed: 1,500 rpm or more. (c) Load driving (Example A/T in Overdrive (5th for M/T), A/C ON, Flat road, 80 km/h (50 mph)) (d) (Main heated*3) oxygen sensor (Rr) signal voltage: Alternating above and below 0.45 V

*3, 4: See page EG–396, 397

Trouble Area	Malfunction Indicator Lamp*1		Memory*2	See page
	Normal Mode	Test Mode		
• Open or short in injector circuit • Fuel line pressure (injector leak, blockage) • Mechanical system malfunction (skipping teeth of timing belt) • Ignition system • Compression pressure (foreign object caught in valve) • Volume air flow meter (air intake) • ECM	ON	ON	○	EG–428
• Open or short in injector circuit • Fuel line pressure (injector leak, blockage) • Mechanical system malfunction (skipping teeth of timing belt) • Ignition system • Compression pressure (foreign object caught in valve) • Volume air flow meter (air intake) • ECM				
• Open or short in heater circuit of sub heated oxygen sensor • Sub heated oxygen sensor • ECM	ON	N.A.	○	EG–434
• Open or short in sub heated oxygen sensor circuit • Sub heated oxygen sensor • ECM	ON	ON		
• Open or short in heater circuit of main heated oxygen sensor (Rr) • Main heated oxygen sensor (Rr) heater • ECM	ON	N.A.	○	EG–419
• (Main heated*3) oxygen sensor (Rr) circuit • (Main heated*3) oxygen sensor (Rr)	ON	ON		

*1, 2, 3: See page EG–396.

DTC No.	Number of MIL Blinks	Circuit	Diagnostic Trouble Code Detecting Condition
31	 BE3933	Volume Air Flow Meter Signal	All conditions below are detected: (a) No volume air flow meter signal to ECM for 2 sec. when engine speed is above 300 rpm (b) Engine stall
35	 BE3933	Barometric Pressure Sensor Signal	Open or short in BARO sensor circuit for 0.5 sec. or more
41	 BE3934	Throttle Position Sensor Signal	Open or short in throttle position sensor circuit for 0.5 sec. or more
42	 BE3934	No.1 Vehicle Speed Sensor Signal (for A/T)	All conditions below are detected continuously for 8 sec. or more: (a) No.1 vehicle speed signal: 0 km/h (mph) (b) Engine speed: 3,000 rpm or more (c) Park/neutral position switch: OFF (d) Stop Light switch: OFF
		No.1 Vehicle Speed Sensor Signal (for A/T)	All conditions below are detected continuously for 8 sec. or more: (a) No.1 vehicle speed signal: 0 km/h (mph) (b) Engine speed: 2,000 rpm and 5,000 rpm (c) Engine coolant temp.: 80˚C (176˚F) or more (d) Load driving
43	 BE3934	Starter Signal	No starter signal to ECM
52	 BE3935	Knock Sensor Signal (front side)	No. No.1 knock sensor signal to ECM for 4 crank revolutions with engine speed between 1,600 rpm and 5,200 rpm
53	 BE3935	Knock Control Signal	Engine control computer (for knock control) malfunction at engine speed between 650 rpm and 5,200 rpm
55	 BE3935	Knock Sensor Signal (rear side)	No No.2 knock sensor signal to ECM for 4 crank revolutions with engine speed between 1,600 rpm and 5,200 rpm

Trouble Area	Malfunction Indicator Lamp*1		Memory*2	See page
	Normal Mode	Test Mode		
• Open or short in volume air flow meter circuit • Volume air flow meter • ECM	ON	N.A.	○	EG–438
• ECM	ON	ON	○	EG–441
• Open or short in throttle position sensor circuit • Throttle position sensor • ECM	ON	ON	○	EG–442
• No.1 vehicle speed sensor • Telltale light RH • Open or short in No.1 vehicle speed sensor circuit • ECM	OFF	OFF	○	EG–445
• Open or short in starter signal circuit • Open or short in ignition switch or starter relay circuit • ECM	N.A.	OFF	X	EG–448
• Open or short in No.1 knock sensor circuit • No.1 knock sensor (looseness) • ECM	ON	N.A.	○	EG–450
• ECM	ON	N.A.	X	EG–450
• Open or short in No.2 knock sensor circuit • No.2 knock sensor (looseness) • ECM	ON	N.A.	○	EG–450

*1, 2: See page EG–396.

DTC No.	Number of MIL Blinks	Circuit	Diagnostic Trouble Code Detecting Condition
71	 8E3937	EGR System Malfunction	EGR gas temp. is 70˚C (158˚F) or less for 1 — 4 min. under conditions (a) and (b): (2 trip detection logic)*4 (a) Engine Coolant temp.: 63˚C (145˚F) or more (b) EGR operation possible (Example A/T in 3rd speed (5th for M/T), A/C ON, 96 km/h (60 mph), Flat road)
78	 8E3937	Fuel Pump Control Signal	(1) Open or short in fuel pump circuit for 1 sec. or more with engine speed 1,000 rpm or less (2 trip detection logic)*4
			(2) Open in input circuit of fuel pump ECU (FPC) with engine speed 1,000 rpm or less (2 trip detection logic)*4
			(3) Open or short in diagnostic signal line (DI) of fuel pump ECU with engine speed 1,000 rpm or less (2 trip detection logic)*4
51	 8E3935	Switch Condition Signal	(1) 3 sec. or more after engine starts, with closed throttle position switch OFF (IDL1) (2) Park/neutral position switch: OFF (Shift position in “R”, “D”, “2”, or “L” position) (3) A/C switch ON

*1: ”ON” displayed in the diagnostic mode column indicates that the Malfunction Indicator Lamp is lit up when a malfunction is detected. ”OFF” indicates that the ”CHECK” does not light up during malfunction diagnosis, even if a malfunction is detected. ”N.A.” indicates that the item is not included in malfunction diagnosis.

*2: ”◯” in the memory column indicates that a diagnostic trouble code is recorded in the ECM memory when a malfunction occurs. ”x” indicates that a diagnostic trouble code is not recorded in the ECM memory even if a malfunction occurs. Accordingly, output of diagnostic results in normal or test mode is done with the IG switch ON.

*3: Only for California specification vehicles.

Trouble Area	Malfunction Indicator Lamp*1		Memory*2	See page
	Normal Mode	Test Mode		
• Open in EGR gas temp. sensor circuit • Short in VSV circuit for EGR • EGR hose disconnected, valve stuck • Clogged EGR gas passage • ECM	ON	ON	◯	EG–453
• Open or short in fuel pump ECU circuit • Fuel pump ECU • Fuel pump • ECM power source circuit • ECM	OFF	ON	◯	EG–457
• A/C switch circuit • Throttle position sensor IDL circuit • Park/neutral position switch circuit • Accelerator pedal and cable • ECM	N.A.	OFF	X	EG–460

*4: This indicates items for which ”2 trip detection logic” is used. With this logic, when a logic malfunction is first detected, the malfunction is temporarily stored in the ECM memory. If the same case is detected again during the second drive test, this second detection causes the Malfunction Indicator Lamp to light up. The 2 trip repeats the same mode a 2nd time. (However, the IG switch must be turned OFF between the 1st trip and 2nd trip).
In the Test Mode, the Malfunction Indicator Lamp lights up the 1st trip a malfunction is detected.

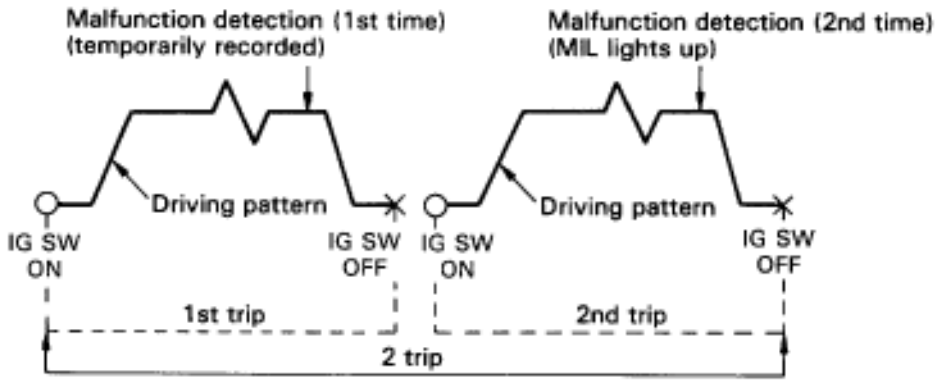

FAIL–SAFE CHART

If any of the following codes is detected, the ECM enters fail–safe mode.

DTC No.	Fail–Safe Operation	Fail–Safe Deactivation Conditions
14	Fuel cut	1 IGF detected in 3 consecutive ignitions
16	Torque control prohibited	Returned to normal condition
22	THW is fixed at 80°C (176°F)	Returned to normal condition
24	THA is fixed at 20°C (68°F)	Returned to normal condition
31	• Ignition timing fixed at 10°BTDC • Injection time fixed: (Starting....9 msec. (IDL ON....3.6 msec. (IDL OFF....6.7 msec.	KS input 15 times/sec. or more
35	Atmospheric pressure is fixed at 101.3 kPa (760 mmHg, 29.92 in.Hg)	Returned to normal condition
41	VTA1 is fixed at 0°	The following must each be repeated at least 2 Times consecutively: • 0.25 V ⊕ VTA ⊕ 0.95 V • IDL: ON
52	Max. timing retardation	IG switch OFF
53	Max. timing retardation	Returned to normal condition
55	Max. timing retardation	IG switch OFF

Back–Up Function

If there is trouble with the program in the ECM and the ignition signals (IGT) are not output from the microcomputer, the ECM controls fuel injection and ignition timing at predetermined levels as a back–up function to make it possible to continue to operate the vehicle.

Furthermore, the injection duration is calculated from the starting signal (STA) and the throttle position signal (IDL). Also, the ignition timing is fixed at the initial ignition timing, 10°BTDC, without relation to the engine speed.

HINT: if the engine is controlled by the back–up function, the malfunction indicator lamp lights up to warn the driver of the malfunction but the diagnostic trouble code is not output.

CHECK FOR INTERMITTENT PROBLEMS

As described in the preceding paragraph, abnormality detection ability in the test mode is increased compared to that in the normal mode, so that when intermittent problems occur in the ECM signal circuits (G1, G2, NE, THW, THA, VTA1) shown in the table below, the appropriate diagnostic trouble code is output.

Accordingly, when the diagnostic trouble codes shown in the table opposite (13, 22, 24, 41) are output during the diagnostic trouble code check, and inspection of the appropriate circuits reveals no abnormality, check for intermittent problems as described below.

By checking for intermittent problems, the place where intermittent problems are occurring due to poor contacts can be isolated.

DTC	Circuit
13	G, NE signal circuit (No.2)
22	Engine coolant temp. sensor circuit
24	Intake air temp. sensor circuit
41	Throttle position sensor circuit

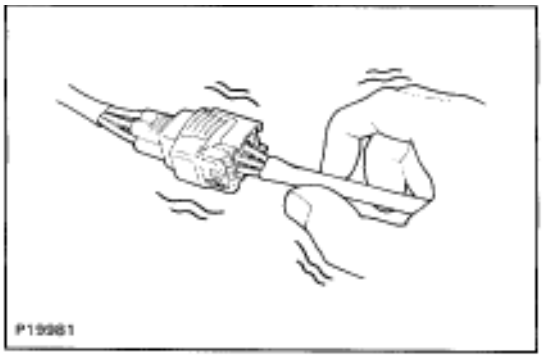

CLEAR DIAGNOSTIC TROUBLE CODES

See page EG–387**.**

SET TEST MODE

1. With the ignition switch OFF, using SST, connect the terminals TE2 and E1 of the data link connector 2.
   SST 09843–18020
2. Start the engine and check to see the malfunction indicator lamp goes off.

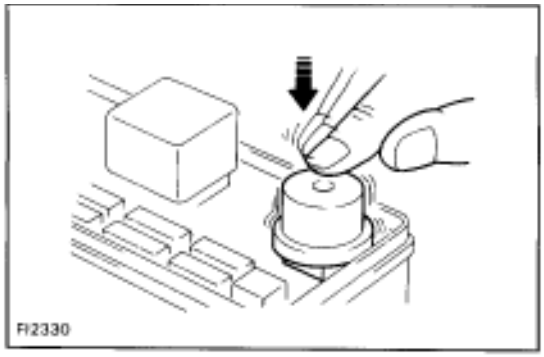

PERFORM A SIMULATION TEST

Using the symptom simulation (See page IN–24), apply vibration to and pull lightly on the wire harness, connector or terminals in the circuit indicated by the malfunction code.
In this test, if the malfunction indicator lamp lights up, it indicates that the place where the wire harness, connector or terminals being pulled or vibrated has a faulty contact. Check that point for loose connections, dirt on the terminals, poor fit or other problems and repair as necessary.

HINT: After cancelling out the diagnostic trouble code in memory and set the test mode, if the malfunction indicator lamp does not go off after the engine is started, check thoroughly for faulty contacts, etc., then try the check again. If the malfunction indicator lamp still does not go off, check and replace ECM.

BASIC INSPECTION

In many cases, by carrying out the basic engine check shown in the following flow chart, the location causing the problem can be found quickly and efficiently. Therefore, use of this check is essential in engine troubleshooting.

If there is a problem, and a normal code is displayed, proceed to the matrix chart of problem symptoms on page EG–408. Make sure that every likely cause of the problem is checked.

1 **Is battery positive voltage 11 V or more when engine is stopped?**

YES

NO → **Charge or replace battery.**

2 **Is engine cranked?**

YES

NO → **Proceed to matrix chart of problem symptoms on page EG–408.**

3 **Does engine start?**

YES

NO → **Go to step 7.**

4 **Check air filter.**

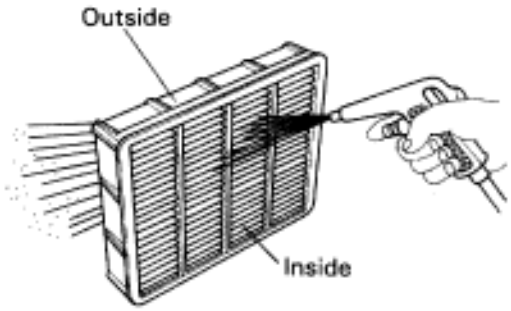

P Remove air filter.

C Visually check that the air filter is not excessive dirty or oily.

Hint If necessary, clean the air filter with compressed air. First blow from inside thoroughly, then blow from outside of the air filter.

OK

NG → **Repair or replace.**

5 Check idle speed.

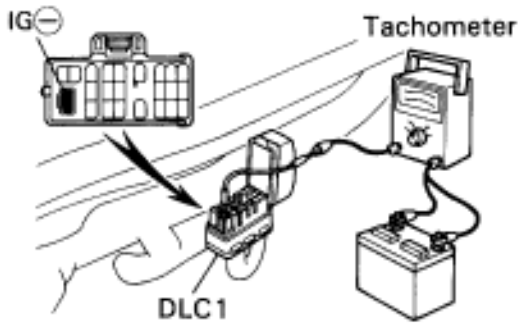

P11291

P
(1) Shift transmission into “N” position.
(2) Warm up engine to normal operating tempera–ture.
(3) Switch OFF all accessories.
(4) Switch OFF air conditioning.
(5) Connect tachometer test probe to terminal IG⊖ of data link connector 1.

C Check idle speed.

OK **Idle speed: 700 ± 50 rpm**

Caution

- **NEVER allow tachometer test probe to touch ground as it could result in damage to igniter and/or ignition coil.**
- **As some tachometers are not compatible with this ignition system, we recommend that you confirm compatibility of your unit become use.**

OK

NG **Proceed to matrix chart of problem symptoms on page EG–408.**

6 Check ignition timing.

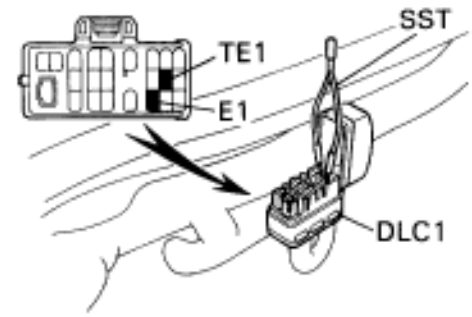

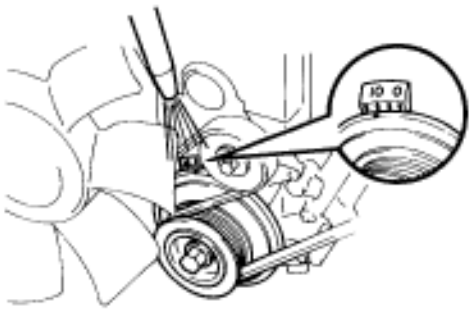
P11288
P02530

P
(1) Shift transmission into “N” position.
(2) Warm up engine to normal operating tempera–ture.
(3) Keep the engine speed at idle.
(4) Using SST, connect terminals TE1 and E1 of data link connector 1.
SST 09843–18020
(5) Connect a timing light probe to No.1 high–ten-sion cord.

C Check ignitiion timing.

OK **Ignition timing: 10 ± 2° BTDC @ idle**

OK

NG **Proceed to page EG–18 and continue to trouble-shoot.**

Proceed to matrix chart of problem symptoms on page EG–408.

7 Check fuel pressure.

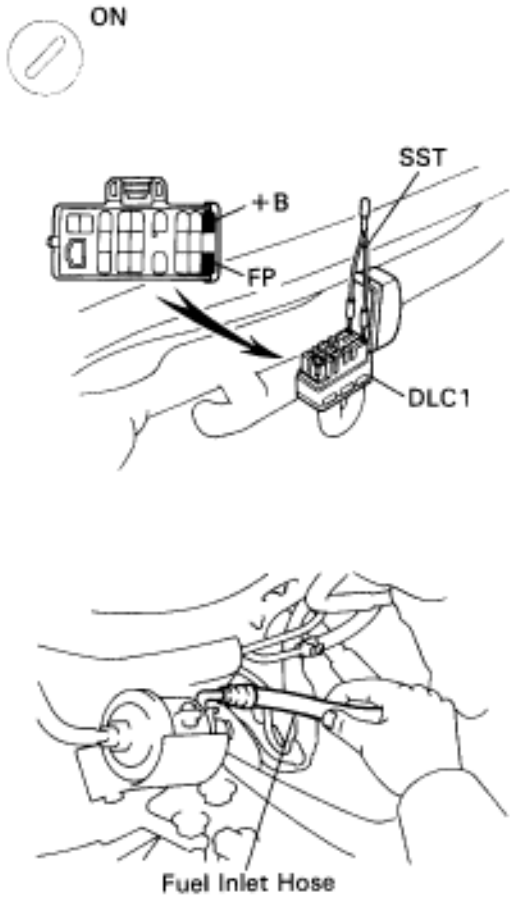

P (1) Be sure that there is enough fuel in the tank.
(2) Turn ignitiion switch ON.
(3) Using SST, connect terminals FP and +B of data link connector 1.
SST 09834–18020

C Check that there is pressure in the hose from the fuel filter.

Hint If there is fule pressure, you will hear the sound of fuel flowing.

Caution
Never make a mistake with the terminal connection position as this will cause a malfunction.

OK

NG **Proceed to page EG–193 and continue to troubleshoot.**

8 Check for spark.

C Disconnect the high–tension cord from the distributor and hold the end about 12.5 mm (1/2”) from the ground. See if spark occurs while the engine is being cranked.

Hint To prevent excess fuel being injected from the injectors during this test, don’t crank the engine for more than 1 — 2 seconds at a time.

OK

NG **Proceed to page IG–4 and continue to troubleshoot.**

Proceed to matrix chart of problem symptoms on page EG–408.

PARTS LOCATION

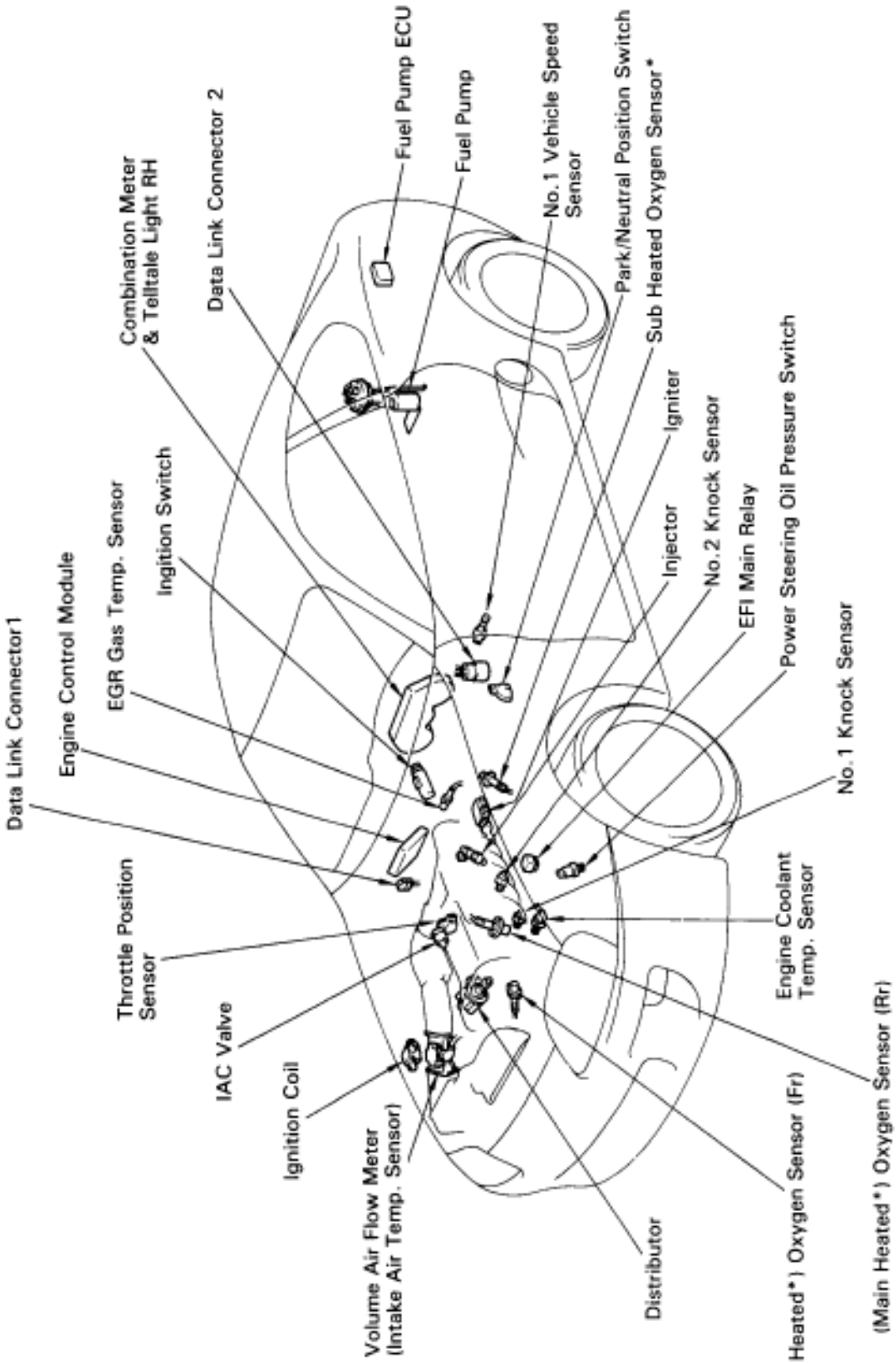

*: Only for California specification vehicles

STANDARD VALUE OF ECM TERMINALS

Connectors of the engine control module are waterproof and are the bolt type.

For waterproof type connectors, in order to measure the voltage of ECM terminals and the resistance of connected parts, connect the inspection sub wire harness between the ECM and vehicle wire harness, then do the inspection.

The inspection method of inserting a tester probe from the other side of connector significantly reduces the waterproof performance.

Disconnect the connector by fully loosening the bolt.

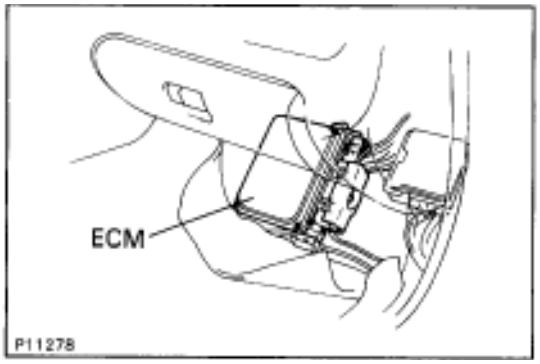

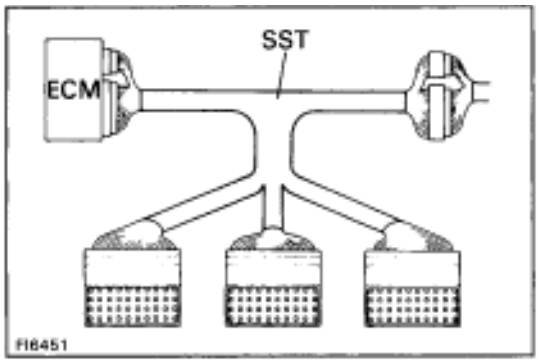

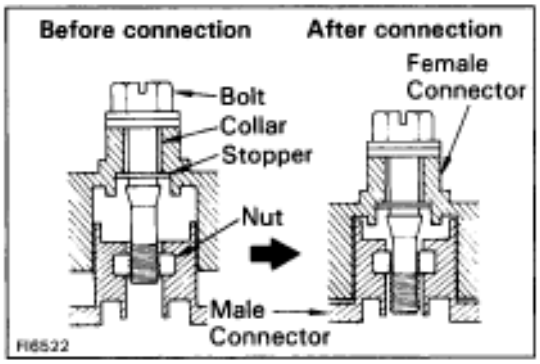

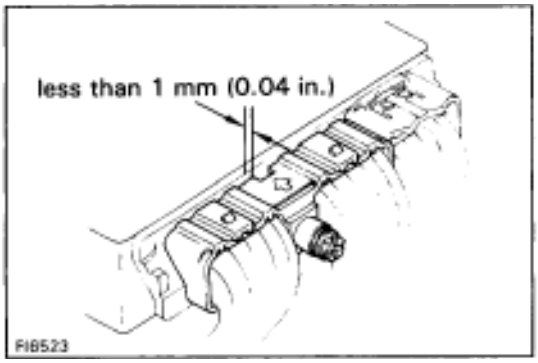

PREPARATION

1. Turn the ignition switch OFF.
2. Turn up the passenger side floor carpet.
   (See page EG–253)
3. Remove the ECM protector.
4. Disconnect the connector from the ECM.
   After completely loosening the bolt, the 2 parts of the connector can be separated.
   NOTICE:
   - **Do not pull the wire harness when disconnecting the connector.**
   - **When disconnecting the connector, the ECM's back–up power source is cut off, so the malfunction codes, etc. recorded in the ECM memory are cancelled.**
   - **Never insert a tester probe or male terminal used for inspection purposes into the female terminal of the vehicle wire harness. Otherwise, the female terminal may be widened, which can result in faulty connection.**
5. Connect SST (check harness "A") between the ECM and connector of the vehicle wire harness.
   SST 09990–01000
   HINT: The arrangement of the check connector terminals are the same as those of the ECM.
   See page EG–405.
6. Disconnect the SST.
   SST 09990–01000
7. Reconnect the connector to the ECM.
   (a) Match the male connector correctly with the female connector, then press them together.
   (b) Tighten the bolt.
   Make sure the connector is completely connected by tightening the bolt until there is a clearance of less than 1 mm (0.04 in.) between the bottom of the male connector and the end of the female connector.
8. Install the ECM protector and floor carpet.

STANDARD VALUE OF ECM TERMINALS

ECM Terminals

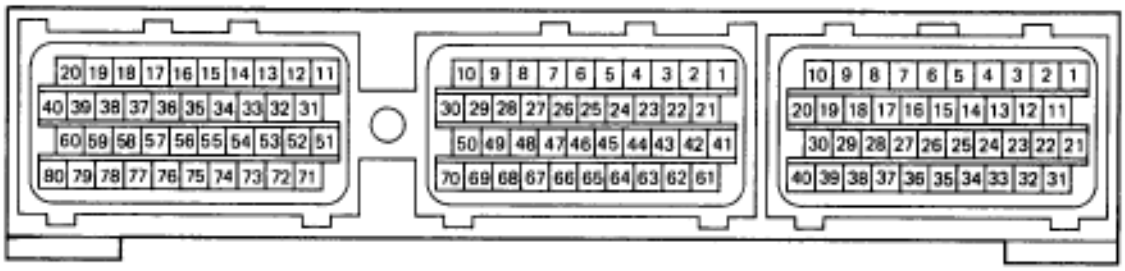

Symbols (Terminals No.)	STD Voltage (V)	Condition
BATT (A33) – E1 (B69)	9 ~ 14	Always
IGSW (A1) +B (A31) – E1 (B69)	9 ~ 14	IG switch ON
VCC (B41) – E2 (B65)	4.5 ~ 5.5	IG switch ON
IDL1 (B64) – E2 (B65)	0 ~ 3.0	IG switch ON and apply vacuum to the throttle opener Throttle valve fully closed
	9 ~ 14	IG switch ON Throttle valve fully opened
VTA1 (B43) – E2 (B65)	0.3 ~ 0.8	IG switch ON Throttle valve fully closed
	3.2 ~ 4.9	IG switch ON Throttle valve fully opened
KS (B66) – E1 (B69)	Pulse generation (See page EG–439)	Idling
THA (B45) – E2 (B65)	0.5 ~ 3.4	Idling, Intake air temp. 0˚C (32˚F) to 80˚C (176˚F)
THW (B44) – E2 (B65)	0.2 ~ 1.0	Idling, Engine coolant temp. 60˚C (140˚F) to 120˚C (248˚F)
STA (B77) – E1 (B69)	6.0 or more	Cranking
#10 (B20), #20 (B19) #30 (B18), #40 (B17) – E01 (B80) #50 (B16), #60 (B15)	9 ~ 14	IG switch ON
	Pulse generation (See page EG–472)	Idling
IGT (B57) – E1 (B69)	Pulse generation (See page EG–415)	Idling
IGF (B58) – E1 (B69)	Below 2.0	IG switch ON
	Pulse generation (See page EG–415)	Idling
G1 (B26), G2 (B25) – G⊖ (B7)	Pulse generation (See page EG–410)	Idling
NE (B27) – G⊖ (B7)	Pulse generation (See page EG–410)	Idling
M-REL (A24) – E1 (B69)	9 ~ 14	IG switch ON
FPC (A22) – E1 (B69)	Below 1.5	IG switch ON
	Pulse generation (4.5 ~ 5.5)	Idling
DI (A21) – E1 (B69)	7.0 or more	Idling

Symbols (Terminals No.)	STD Voltage (V)	Condition
ACIS (B39)–E01 (B80)	9 ~ 14	IG switch ON
EVAP (B74)–E01 (B80)	9 ~ 14	IG switch ON
EGR (B75)–E01 (B80)	Below 2.0	Idling
	9 ~ 14	Engine speed at 3,500 rpm
ISC1 (B35), ISC2 (B34) ISC3 (B33), ISC4 (B32) –E01 (B80)	Pulse generation (See page EG–475)	Idling, when A/C switch ON or OFF
VF1 (B29), VF2 (B28)–E1 (B69)	1.8 ~ 3.2	Maintain engine speed at 2,500 rpm for 2 minutes after warming up then return to Idling
OX1 (B48), OX2 (B47)–E1 (B69) OX3 (A30)*	Pulse generation (See page EG–423)	Maintain engine speed at 2,500 rpm for 2 minutes after warming up
HT1 (B73)*, HT2 (B72)*–E01 (B80) HT3 (A36)*	Below 3.0	Idling
	9 ~ 14	IG switch ON
KNK1 (B50), KNK2 (B49)–E1 (B69)	Pulse generation (See page EG–452)	Idling
NSW (B76)–E1 (B69)	9 ~ 14	IG switch ON Other shift position in ”P”, ”N” position
	0 ~ 3.0	IG switch ON Shift position in ”P”, ”N” position
SP1 (A2)–E1 (B69)	Pulse generation (See page EG–445)	IG switch ON Rotate driving wheel slowly
TE1 (A20)–E1 (B69)	9 ~ 14	IG switch ON
TE2 (A19)–E1 (B69)	9 ~ 14	IG switch ON
W (A6)–E1 (B69)	9 ~ 14	Idling
	0 ~ 3.0	IG switch ON
OD1 (A12)–E1 (B69)	9 ~ 14	IG switch ON
A/C (A34)–E1 (B69)	7.5 ~ 14	A/C switch OFF
	0 ~ 1.5	A/C switch ON (At idling)
ACMG (A23)–E1 (B69)	0 ~ 3.0	A/C switch ON (At idling)
	9 ~ 14	A/C switch OFF
FPU (B36)*–E01 (B80)	9 ~ 14	IG switch ON
	Below 2.0	Restarting at high engine coolant temp.
ELS (A15)–E1 (B69)	7.5 ~ 14	Defogger switch and taillight switch ON
	0 ~ 1.5	Defogger switch and taillight switch OFF

*: Only for California specification vehicles

REFERENCE VALUE OF ECM DATA

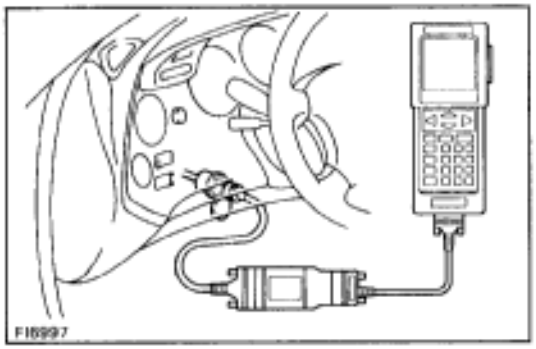

HINT: ECM data can be monitored by TOYOTA hand–held tester.

1. Hook up the TOYOTA hand–held tester to DLC2.
2. Monitor ECM data by following the prompts on the tester screen.

Please refer to the TOYOTA hand–held tester operator's manual for further details.

REFERENCE VALUE

Item	Inspection condition	Reference value
INJECTOR	Engine cold to hot Engine idling at normal operating temp.*1	Gradually decreases Approx. 2.0 msec.
IGNITION	Increase engine speed	Gradually increases
IAC STEP #	Engine idling at normal operating temp.*1 A/C switch ON A/T shifting in "D" position Ignition switch ON (Engine off)	20 ~ 25 steps Step increases Step increases Approx. 125 steps
ENGINE SPEED	RPM kept stable (Comparison with tachometer)	No great changes
VAF	Engine idling at normal operating temp.*1 Increase engine speed	Approx. 35 ms Gradually decreases
ECT	Engine at normal operating temp.	75–95˚C (185–203˚F)*2
THROTTLE	Closed throttle position Wide open throttle From closed throttle position to wide open throttle	Below 5˚ Above 70˚ Gradually increases
VEHICLE SPD	During driving (Comparison with speedometer)	No large differences
TARGET A/FL*5	Engine idling at normal operating temp.	2.50 ± 1.25 V*3
TARGET A/FR*6	Engine idling at normal operating temp.	2.50 ± 1.25 V*3
A/F FB LEFT*5	RPM stable at 2500 rpm with normal operating temp.	ON
A/F FB RIGHT*6	RPM stable at 2500 rpm with normal operating temp.	ON
KNOCK FB	Depress throttle pedal suddenly during idling	ON
STA SIGNAL	During cranking	ON
CTP SIGNAL	Closed throttle position	ON
A/C SIGNAL	A/C switch ON	ON
PNP SIGNAL*4	When shifting from "P" or "N" position into a position other than "P" or "N"	GEAR
O X L*5	RPM stable at 2500 rpm with normal operating temp.	RICH LEAN is repeated
O X R*6	RPM stable at 2500 rpm with normal operating temp.	RICH LEAN is repeated

*1: If the engine coolant temp. sensor circuit is open or shorted, the ECM assumes an engine coolant temp. value of 80˚C (176˚F).
*2: When feedback control is forbidden, 0 V is displayed.
*3: A/T only
*4: Oxygen sensor (Front)
*5: Oxygen sensor (Rear)

MATRIX CHART OF PROBLEM SYMPTOMS

When the malfunction code is not confirmed in the diagnostic trouble code check and the problem still can not be confirmed in the basic inspection, proceed to this matrix chart and troubleshoot according to the numbered order given below.

Symptom	Suspect area	See page	Volume air flow meter circuit	Starter signal circuit	EGR system	Switch condition signal circuit	Park/neutral position switch circuit	ECM power source circuit	Back up power source circuit	Injector circuit	IAC valve circuit	Fuel pump control circuit	VSV circuit for fuel pressure control	A/C signal circuit (Compressor circuit)	Starter and Starter relay	Ignition signal circuit (Spark test)	Spark plug	Ignition coil	Distributor	Compression	A/T faulty	Theft deterrent ECU	Engine control module (ECM)
			EG–438	EG–438	EG–453	EG–460	EG–463	EG–465	EG–470	EG–472	EG–475	EG–457	EG–481	AC–62	ST–3, 12	IG–4	IG–5	IG–7	IG–7	EG–9	AT2–81	BE–123	IN–35
Does not start	Engine does not crank						2								1							3	
	No initial combustion							1		5		3				2	4						
	No complete combustion									6		1				5	4	2	3				
Difficult to start	Engine cranks normally			1						8	2	3					6	4	5	7			
	Cold engine			1						4	2	3					7	5	6				
	Hot engine			1						5	2	4	3				8	6	7				
Poor Idling	Incorrect first idle					1					2												
	High engine idle speed					1	5	4	6		2			3									
	Low engine idle speed	7				3	4		8	6	1	5		2									
	Rough idling	3			5	1			12	4	2	8				6	11	9	10	7			
	Hunting	3				1		4			2	5											
Poor Driveability	Hesitation/Poor acceleration	2				1				3		4				5	8	6	7		9		
	Muffler explosion (after fire)					1				5							4	2	3				
	Surging					1				5		2					4		3				
Engine Stall	Soon after starting	2									3	1											
	After accelerator pedal depressed	2				1																	
	After accelerator pedal released									1	2												3
	During A/C operation										1			2									3
	When shifting N to D						1				2												

CIRCUIT INSPECTION

DTC 12 G NE Signal Circuit (No.1)

CIRCUIT DESCRIPTION

The distributor in the Engine Control System contains 3 pick–up coils (G1, G2 and NE).
The G1, G2 signals inform the ECM of the standard crankshaft angle.
The NE signals inform the ECM of the crankshaft angle and the engine speed.

DTC No.	Diagnostic Trouble Code Detecting Condition	Trouble Area
12	No ”NE” or ”G1” and ”G2” signal to ECM for 2 sec. or more after cranking	• Open or short in NE, G circuit • Distributor • Open or short in STA circuit • ECM
	Open in ”G ±“ circuit	

WIRING DIAGRAM

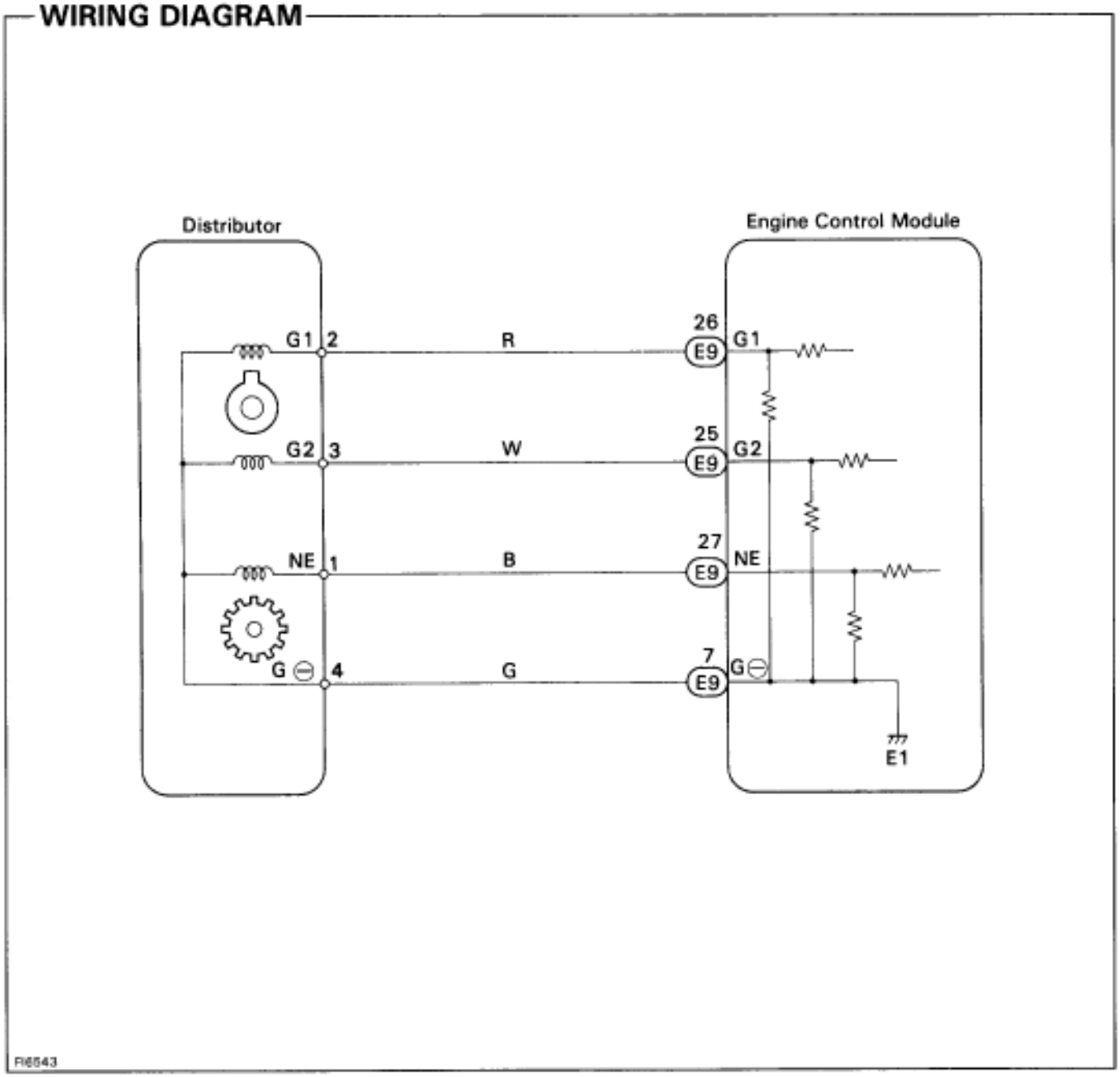

INSPECTION PROCEDURE

1 **Check resistance of each pickup coils in distributor.**

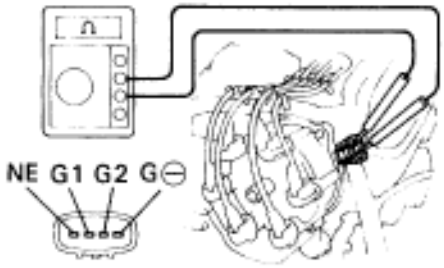

FI6631

P Disconnect distributor connector.

C Measure resistance between each terminal shown in the table below.

OK

		Resistance
G1 pickup coil (G1–G ±)	Cold	125 ~ 200 Ω
	Hot	160 ~ 235 Ω
G2 pickup coil (G2–G ±)	Cold	125 ~ 200 Ω
	Hot	160 ~ 235 Ω
NE pickup coil (NE–G ±)	Cold	155 ~ 250 Ω
	Hot	190 ~ 290 Ω

"Cold" is from — 10˚C (14˚F) to 50˚C (122˚F) and "Hot" is from 50˚C (122˚F) to 100˚C (212˚F).

Reference **INSPECTION USING OSCILLOSCOPE**

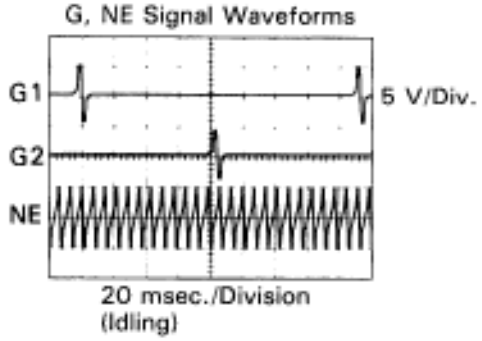

FI6519

- During cranking or idling, check waveforms between terminals G1, G2, NE and G ± of engine control module

HINT: The correct waveforms are as shown.

OK

NG → **Replace Distributor**

2 **Check for open and short in harness and connector between engine control module and distributor (See page IN–30).**

OK

NG → **Repair or replace harness or connector**

3 **Check air gap.**

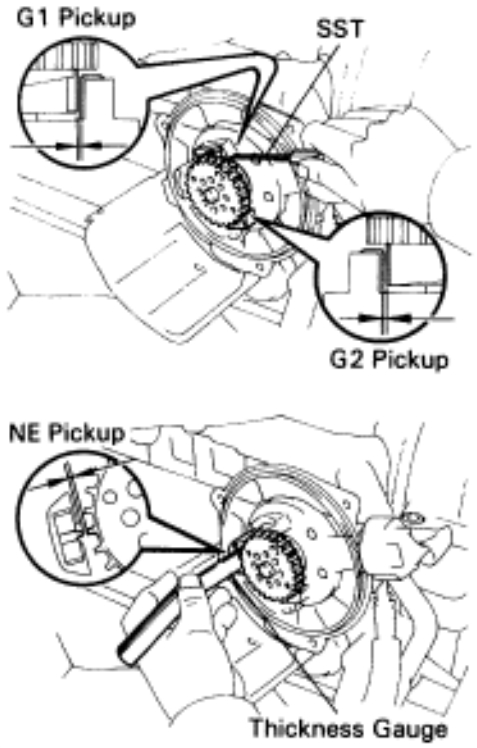

P Remove distributor cap & rotor.

C Using SST (G1 and G2 pickups) and a thickness gauge (NE pickup), measure the air gap between the signal rotor and pickup coil projection**.**

SST 09240–00020 for G1 and G2 pickups

OK **Air gap: 0.2 — 0.5 mm (0.008 — 0.020 in.)**

NG → **Replace distributor housing assembly**

OK

Check and replace engine control module.

DTC 13 G NE Signal Circuit (No.2)

CIRCUIT DESCRIPTION

See G, NE signal circuit (No. 1) on page EG–409.

DTC No.	Diagnostic Trouble Code Detecting Condition	Trouble Area
13	No NE signal to ECM for 0.1 sec. or more at 1,000 rpm or more	• Open or short in NE circuit • Distributor • ECM
	NE signal does not pulse 12 times to ECM during the interval between G1 and G2 pulses	

DIAGNOSIS

This code indicates that a intermittent problems of the G, NE signal from the distributor to the ECM has occurred, but that it has returned to normal. Note that although this problem may not necessarily appear at the time of inspection, it cannot be ignored because this diagnostic trouble code is output, indicating that there is or was a malfunction in the G, NE signal circuit; this ”malfunction” is usually a loose connector.
The distributor connector and the NE terminal of the ECM connector must therefore be checked for the following:

1. Loose connectors
2. Dirty connector terminals
3. Loose connector terminals

DTC 14 Ignition Signal Circuit

CIRCUIT DESCRIPTION

The ECM determines the ignition timing, turns on Tr_1 at a predetermined angle (˚CA) before the desired ignition timing and outputs an ignition signal (IGT) ”1” to the igniter.
Since the width of the IGT signal is constant, the dwell angle control circuit in the igniter determines the time the control circuit starts primary current flow to the ignition coil based on the engine rpm and ignition timing one revolution ago, that is, the time the Tr_2 turns on.
When it reaches the ignition timing, the ECM turns Tr_1 off and outputs the IGT signal ”O”.
This turns Tr_2 off, interrupting the primary current flow and generating a high voltage in the secondary coil which causes the spark plug to spark. Also, by the counter electromotive force generated when the primary current is interrupted, the igniter sends an ignition confirmation signal (IGF) to the ECM.
The ECM stops fuel injection as a fail safe function when the IGF signal is not input to the ECM.

DTC No.	Diagnostic Trouble Code Detecting Condition	Trouble Area
14	No IGF signal to ECM for 6 consecutive IGT signals	• Open or short in IGF OR IGT circuit from igniter to ECM • Igniter • ECM

WIRING DIAGRAM

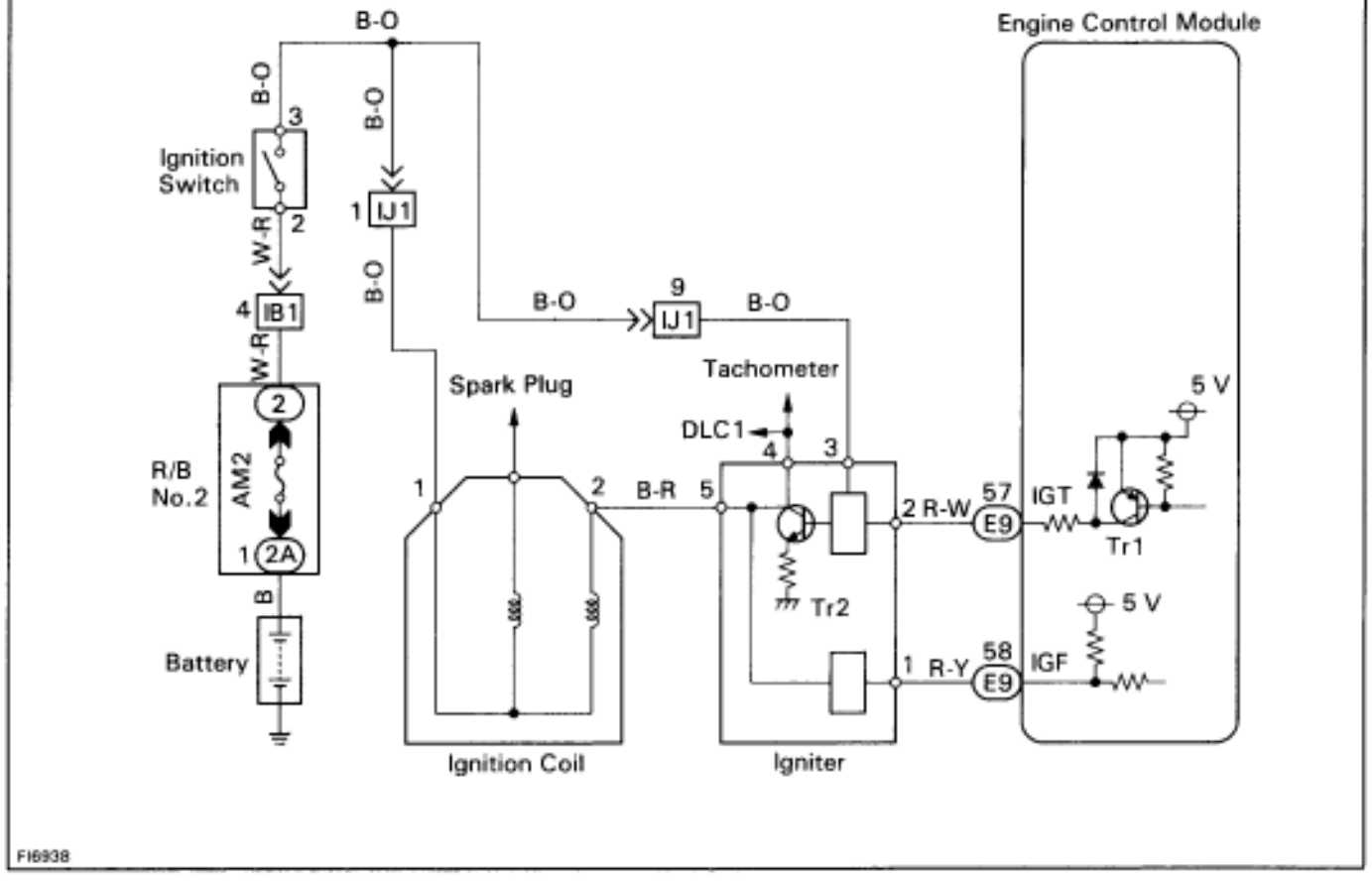

INSPECTION PROCEDURE

1 **Check for spark.**

C Disconnect the high–tension cord from the distributor, hold its end about 12.5 mm (1/2”) from the ground, see if spark occurs while the engine is being cranked.

OK **Spark should be generated.**

Notice
To prevent excess fuel being injected from the injectors during this check. Don’t crank the engine for more than 1 — 2 seconds at a time.

OK

NG > **Go to step 4.**

2 **Check for open and short in harness and connector in IGF signal circuit between engine control module and igniter (see page IN–30).**

OK

NG > **Repair or replace harness or connector.**

3 **Disconnect igniter connector and check voltage between terminal IGF of engine control module connector and body ground.**

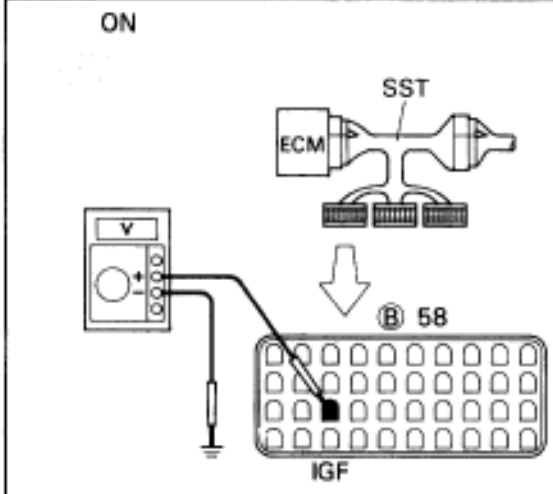

P (1) Disconnect igniter connector.
(2) Connect SST (check harness “A”).
See page EG–404)
SST 09990–01000
(3) Turn ignition switch ON.

C Measure voltage between terminal IGF of engine control module connector and body ground.

OK **Voltage: 4.5 ~ 5.5 V**

NG

OK > **Replace igniter.**

Check and replace engine control module.

4 **Check voltage between terminal IGT of engine control module connector and body ground.**

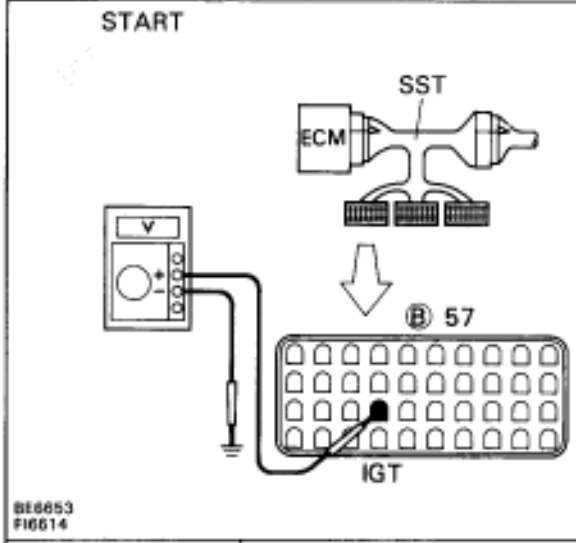

P Connect SST (check harness “A”).
See page EG–404)
SST 09990–01000

C Measure voltage between terminal IGF of engine control module connector and body ground when engine is cranked.

OK **Voltage: 0.5 — 1.0 V**
(Neither 0 V nor 5 V)

Reference **INSPECTION USING OSCILLOSCOPE**

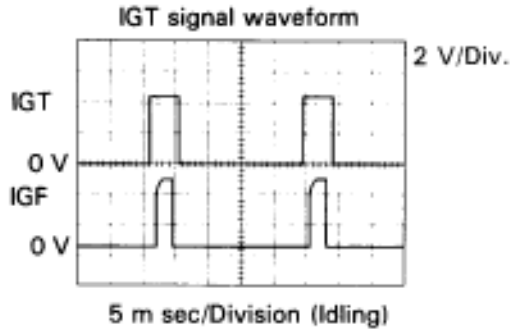

- During cranking or idling, check waveforms between terminal IGT and E1 of engine control module.

HINT: The correct rectangular waveforms are as shown.

OK

NG Go to step 8.

5 **Check voltage between terminal 3 of igniter connector and body ground.**

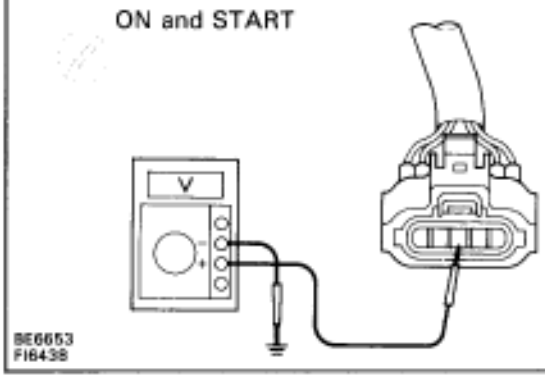

P Disconnect igniter connector.

C Measure voltage between terminal 3 of igniter connector and body ground, when ignition switch is turned to “ON” and “START” position.

OK **Voltage: 9 — 14 V**

OK

NG **Check and repair igniter power source circuit.**

6 **Check for open and short in harness and connector between ignitioin switch and ignition coil, ignition coil and igniter (See page IN–30).**

OK

NG → **Repair or replace harness or connector.**

7 **Check ignition coil.**

Primary Coil

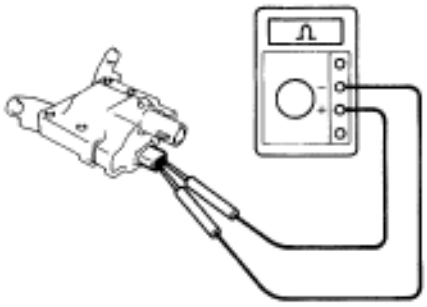

Secondary Coil

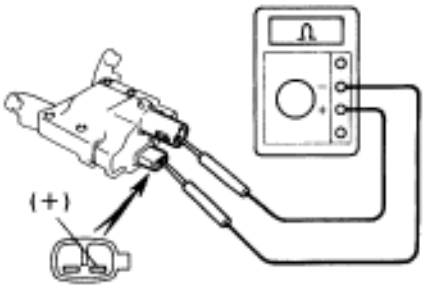

P11567
P11573

P Disconnect ignition coil connector.

C
(1) Check primary coil.
Measure resistance between terminals of ignition coil connector.
(2) Check secondary coil.
Measure resistance between terminal ⊕ of ignition coil connector and high–tension terminal.

OK

		Resistance
(a) Primary Coil	Cold	0.36 – 0.55 Ω
	Hot	0.45 – 0.65 Ω
(b) Secondary Coil	Cold	9.0 – 11.1 kΩ
	Hot	11.4 – 18.1 kΩ

"Cold" is from — 10˚C (14˚F) to 50˚C (122˚F) and "Hot" is from 50˚C (122˚F) to 100˚C (212˚F).

OK

NG → **Replace ignition coil.**

Replace igniter.

8 **Disconnect igniter connector and check voltage between terminal IGT of engine control module connector and body ground.**

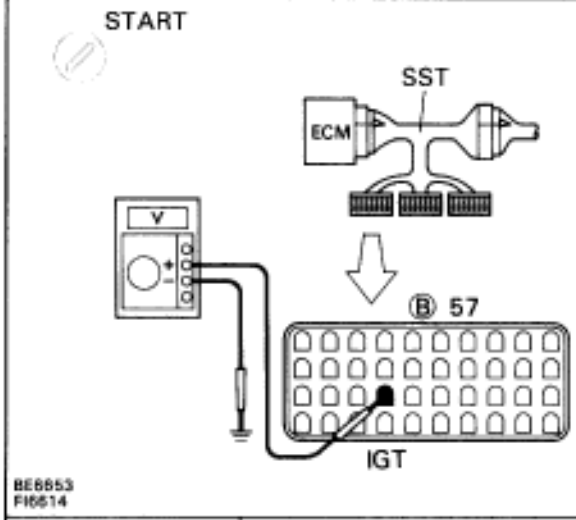

P Disconnect igniter connector.

C Measure voltage between terminal IGT of engine control module connector and body ground when engine is cranked.

OK **Voltage: 0.5 — 1.0 V (Neither 0 V nor 5 V)**

Reference **INSPECTION USING OSCILLOSCOPE**

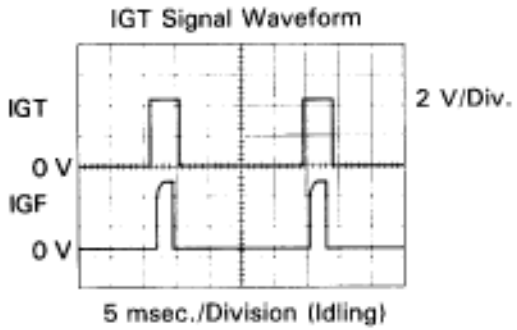

- During cranking or idling, check waveforms between terminal IGT and E1 of engine control module.

HINT: The correct rectangular waveforms are as shown.

NG → OK → **Replace igniter.**

9 **Check for open and short in harness and connector in IGT signal circuit between engine control module and igniter (See page IN–30).**

NG → **Repair or replace harness or connector.**

OK → **Check and replace engine control module.**

DTC 16 A T Control Signal Malfunction

CIRCUIT DESCRIPTION

The signal from the A/T CPU retards the ignition timing of the engine during A/T gear shifting, thus momentarily reducing torque output of the engine for smooth clutch operation inside the transmission and reduced shift shock.

DTC No.	Diagnostic Trouble Code Detecting Condition	Trouble Area
16	Fault in communications between the engine CPU and A/T CPU in the ECM	• ECM

If the ECM detects the diagnostic trouble code ”16” in memory, it prohibits the torque control of the A/T which performs smooth gear shifting.

INSPECTION PROCEDURE

1 **Are there any otheer codes (besides Code 16) being output?**

YES **Go to relevant diagnostic trouble code chart.**

NO

Repair engine control module.

DTC 21 28 (Main Heated*1) Oxygen Sensor Circuit

CIRCUIT DESCRIPTION

To obtain a high purification rate for the Co, Hc and NOx components of the exhaust gas, a three–way catalytic converter is used, but for most efficient use of the three–way catalytic converter, the air–fuel ratio must be precisely controlled so that it is always close to the stoichiometric air–fuel ratio.

The oxygen sensor has the characteristic whereby its output voltage changes suddenly in the vicinity of the stoichiometric air–fuel ratio. This characteristic is used to detect the oxygen concentration in the exhaust gas and provide feedback to the computer for control of the air fuel ratio.

When the air–fuel ratio becomes LEAN, the oxygen concentration in the exhaust increases and the oxygen sensor informs the ECM of the LEAN condition (small electromotive force: 0 V).

When the air–fuel ratio is RICHER than the stoichiometric air–fuel ratio the oxygen concentration in the exhaust gas is reduced and the oxygen sensor informs the ECM of the RICH condition (large electromotive force: V).

The ECM judges by the electromotive force from the oxygen sensor whether the air–fuel ratio is RICH or LEAn and controls the injection duration accordingly. However, if malfunction of the oxygen sensor causes an output of abnormal electromotive force, the ECM is unable to perform accurate air–fuel ratio control.

The main heated oxygen sensors include a heater which heats the Zirconia element. The heater is controlled by the ECM. When the intake air volume is low t(the temperature of the exhaust has is low) current flows to the heater to heat the sensor for accurate oxygen concentration detection.) *1

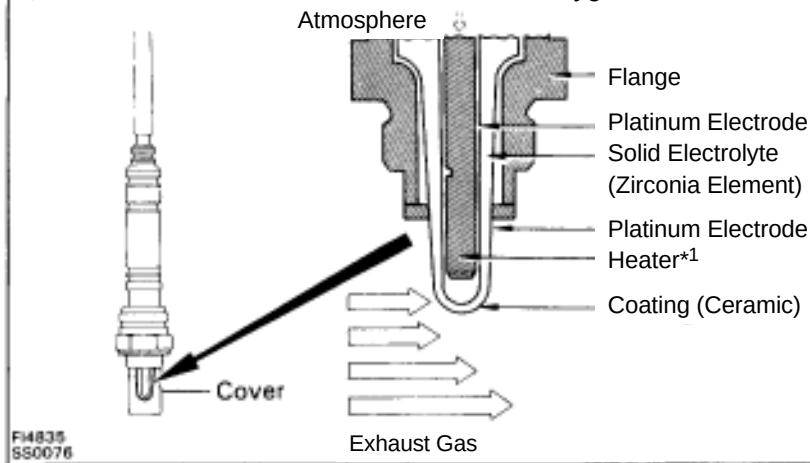

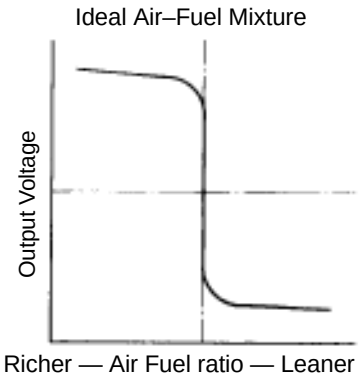

DTC No.	Diagnostic Trouble Code Detecting Condition	Trouble Area
21 • 28	(1)*1 Open or snort in heater circuit of main heated oxygen sensor for 0.5 sec. or more.	• Open or short in heater circuit of main heated oxygen sensor • Main heated oxygen sensor heater • ECM
	(2) (Main heated*1) oxygen sensor signal voltage is reduced to between 0.35 V and 0.70 V for 60 sec. under conditions (a) ~ (d): (2) trip detection logic)*2 (a) Engine coolant temp.: Between 80˚C (176˚F and 95˚C (203˚F) (b) Engine speed: 1,500 rpm or more (c) Load driving (Example A/T in Overdrive (5th for M/T), A/C ON, Flat road, 80 km/h (50 mph)) (d) (Main heated*1) oxygen sensor signal voltage: Alternating above and below 0.45 V	• (Main heated*1) oxygen sensor circuit • (Main heated*1) oxygen sensor

HINT: Diagnostic trouble code “21” is for the (main heated*1) oxygen sensor (Fr) circuit.
Diagnostic trouble code “28” is for the (main heated*1) oxygen sensor (Rr) circuit.

*1: Main heated oxygen sensor ONLY for California specification vehicles.

*2: See page EG–397.

CIRCUIT DESCRIPTION (Cont'd)

DIAGNOSTIC TROUBLE CODE DETECTION DRIVING PATTERN

Purpose of the driving pattern.

(a) To simulate diagnostic trouble code detecting condition after diagnostic trouble code is recorded.

(b) To check that the malfunction is corrected when the repair is completed confirming that diagnostic trouble code is no longer detected.

Malfunction: (Main heated() Oxygen Sensor Detection

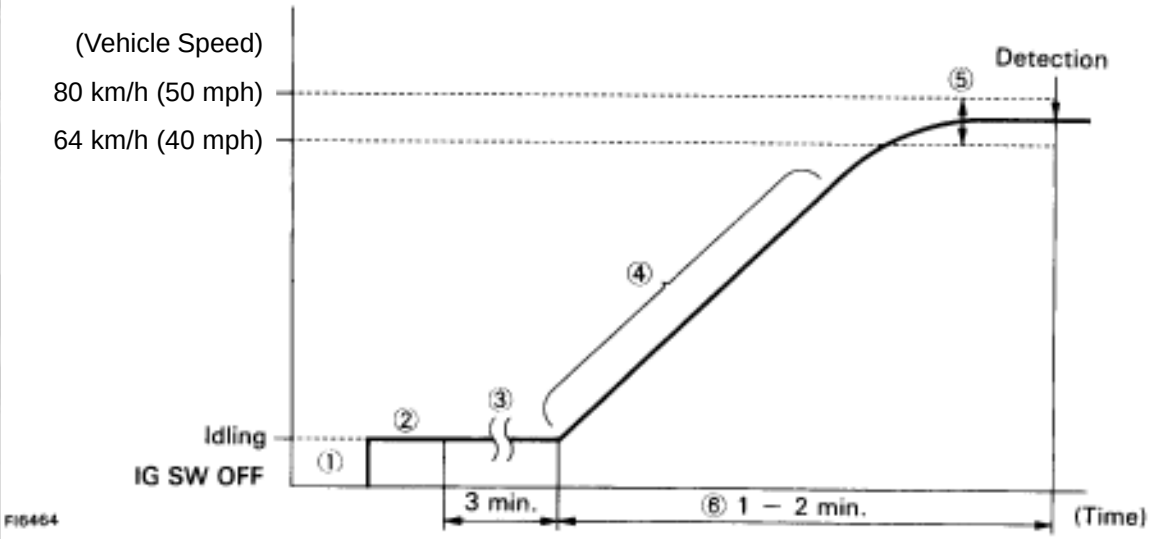

It is vital that this test routine is adhered to detect the malfunction:

(1) Disconnect the EFI No.1 fuse (30 A) for 10 sec. or more, with IG switch OFF. Initiate test mode (Connect terminal TE2 and E1 of data link connector 2 with IG switch OFF).
(2) Start the engine and warm up with all ACC switched OFF.
(3) Idle the engine for 3 min.
(4) Accelerate gradually within the range 1,300 ~ 1,700 rpm (dentered around 1,500 rpm) with the A/C switched ON and D position for A/T (5th for M/T).

HINT:
- Ensure engine rpm does NOT fall below 1200 rpm.
- Gradually depress the accelerator pedal at a suitable rate to comply with the test requirements on the above graph.
- Never allow engine rpm to drop at any time during the test.

(5) Maintain the vehicle speed at 64 — 80 km/h (40 — 50 mph).
(6) Keep the vehicle running for — 2 min. after starting acceleration.

HINT: If a malfunction exists, the Malfunction Indicator Lamp will light up after approx. 60 sec. from the start of acceleration.

NOTICE: If the conditions in this test are not strictly followed, detection of the malfunction will not be possible.

*: Main heated oxygen sensor only for California specification vehicles

WIRING DIAGRAM

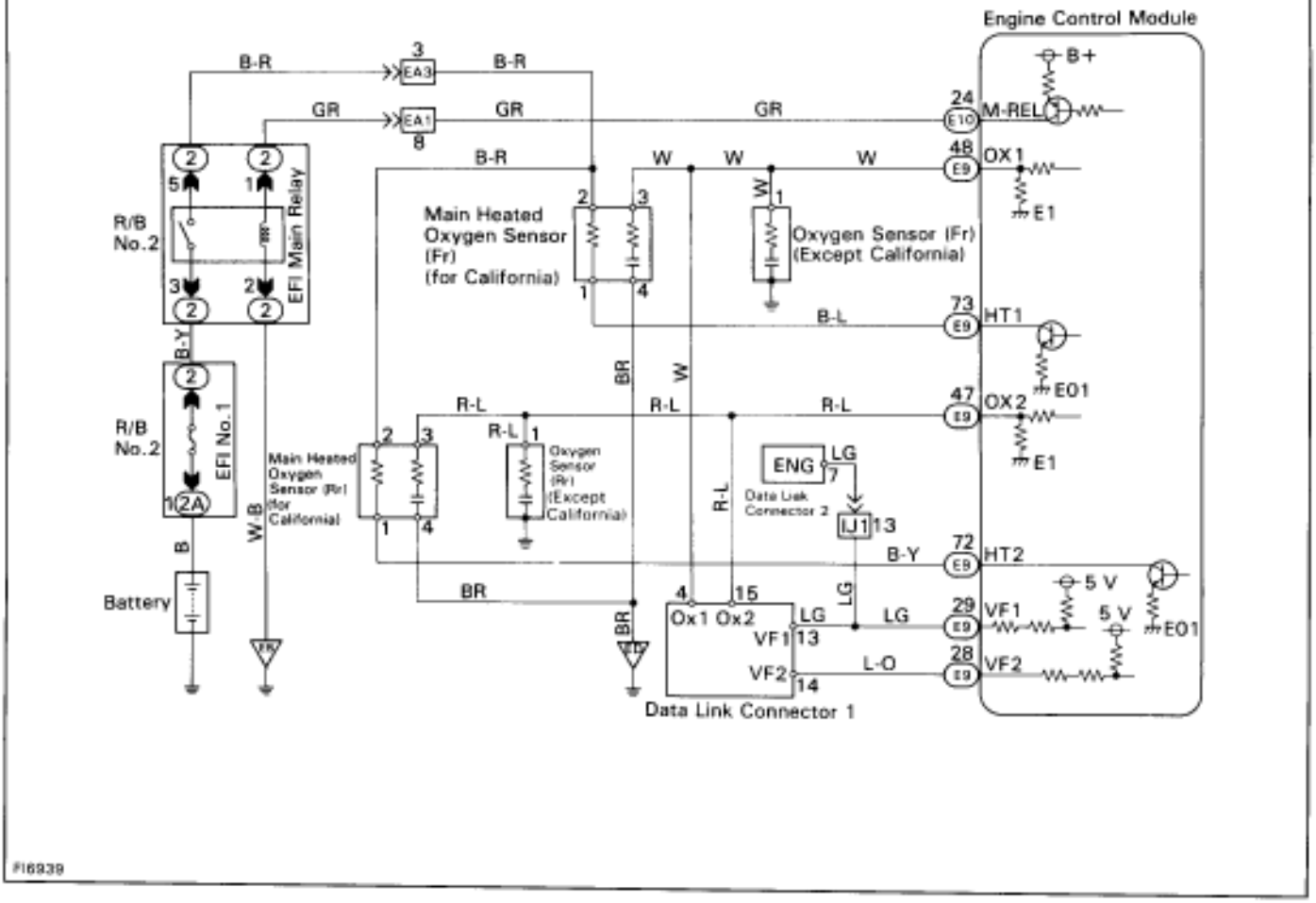

INSPECTION PROCEDURE (Except California specification vehicles)

HINT: If diagnostic trouble code ”21” is output, replace oxygen sensor (Fr).
If diagnostic trouble code ”28” is output, replace oxygen sensor (Rr).

1 **Are there any other codes (besides code 21 or 28) being output?**

YES → **Go to relevant diagnostic trouble code chart.**

NO

Replace oxygen sensor.

INSPECTION PROCEDURE (Only for California specification vehicles)

HINT: If diagnostic trouble code ”21” is output, check the main heated oxygen sensor (Fr) circuit.
If diagnostic trouble code ”28” is output, check the main heated oxygen sensor (Rr) circuit.

1 Check voltage between terminals HT1, HT2 of engine control module connector and body ground.

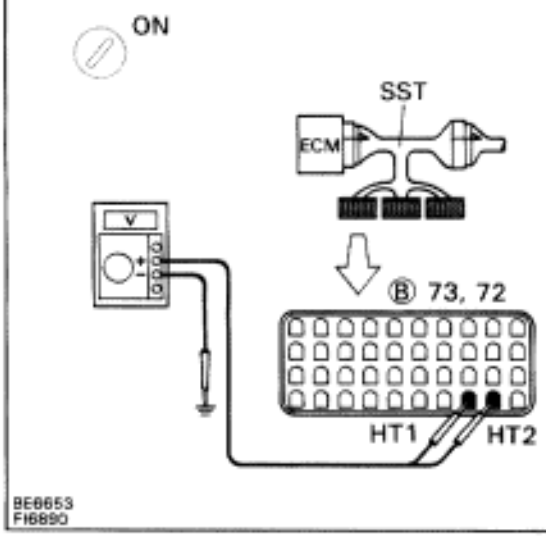

P Connect SST (check harness “A”).
See page EG–404)
SST 09990–01000

C Measure voltage between terminals HT1, HT2 of engine control module connector and body ground.

OK **Voltage: 9 — 14 V**

NG

OK 〉 **Go to step 3 .**

2 Check main heated oxygen sensor heater.

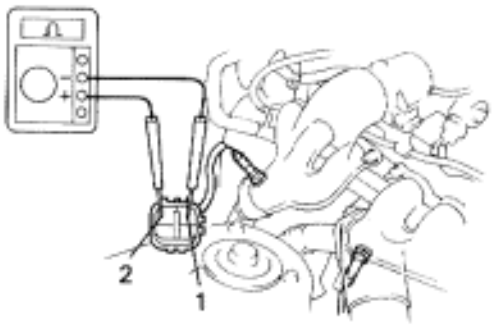

P Disconnect main heated oxygen sensor connector.

C Measure resistance between terminals 1 and 2 of main heated oxygen sensor connector.

OK **Resistance: 11 — 16 Ω at 20˚C (68˚F)**

OK

NG 〉 **Replace main heated oxygen sensor.**

Check and repair harness or connector between main relay and main heated oxygen sensor, main heated oxygen sensor and engine control module.

3 Check voltage between terminals HT1, HT2 of engine control module connector and body ground.

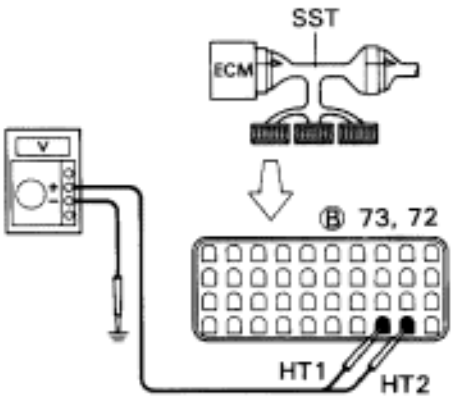

P Warm up engine to normal operating temperature.

C Measure voltage between terminals HT1, HT2 of engine control module connector and body ground. when engine is idling and racing at 4,000 rpm.

OK

	Voltage
Idling	0 V
Racing at 4,000 rpm	9 – 14 V

Hint In the 4,000 rpm racing check, continue engine racing at 4,000 rpm for approx. 20 seconds or more.

NG → **Check and replace engine control module.**

OK → **Replace main heated oxygen sensor.***

*: It is probable the oxygen sensor has deteriorated. Usually, this cannot be confirmed by visual inspection.

Reference — INSPECTION USING OSCILLOSCOPE

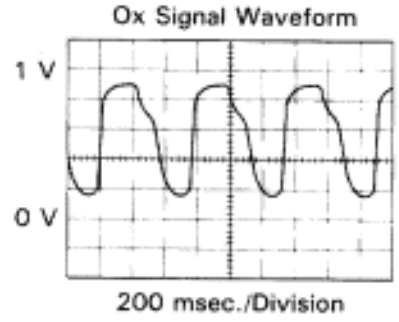

- With the engine racing (4,000 rpm) measure wave–form between terminals OX1, OX2 and E1 of engine control module.

HINT: The correct waveform is as shown, oscillating be tween approx. 0.1 V nd 0.9 V

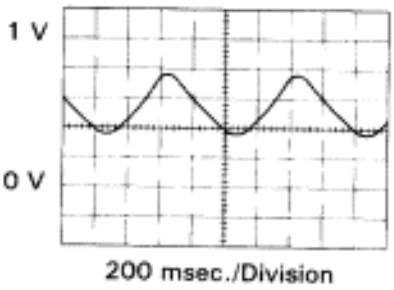

If the oxygen sensor has deteriorated, the ampli–tude of the voltage will be reduced as shown on the left.

FI6514
FI6515

DTC 22 Engine Coolant Temp. Sensor Circuit

CIRCUIT DESCRIPTION

The engine coolant temperature sensor senses the coolant temperature. A thermistor built in the sensor changes its resistance value according to the coolant temperature. The lower the coolant temperature, the greater the thermistor resistance value, and the higher the coolant temperature, the lower thermistor resistance value (See Fig. 1.).

The engine coolant temperature sensor is connected to the ECM (See wiring diagram). The 5 V power source voltage in the ECM is applied to the engine coolant temperature sensor from the terminal THW via a resistor R. That is, the resistor R an the engine coolant temperature sensor are connected in series. When the resistance value of the engine coolant temperature sensor changes in accordance with the changes in the coolant temperature the potential at the terminal THW also changes. Based on this signal, the ECM increases the fuel injection volume to improve driveability during cold engine operation. If the ECM detects the diagnostic trouble code 22, it operates the fail safe function in which the engine coolant temperature is assumed to be 80˚C (176˚F).

(fig-1)

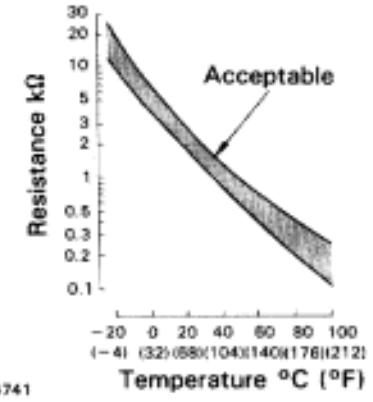

Reference

Engine Coolant Temp. °C (°F)	Resis–tance (kΩ)	Voltage (V)
−20 (−4)	16.2	4.3
0 (32)	5.9	3.4
20 (68)	2.5	2.4
40 (104)	1.1	1.4
60 (140)	0.6	0.9
80 (176)	0.3	0.5
100 (212)	0.2	0.3

DTC No.	Diagnostic Trouble Code Detecting Condition	Trouble Area
22	Open or short in engine coolant temp. sensor circuit for 0.5 sec. or more	• Open or short in engine coolant temp. sensor circuit • Engine coolant temp. sensor • ECM

WIRING DIAGRAM

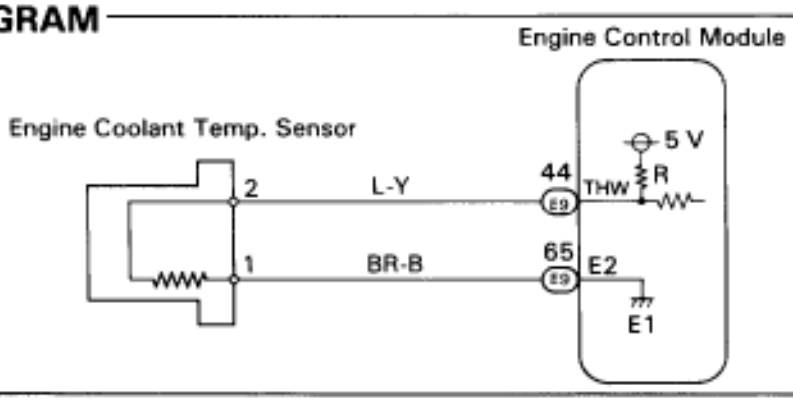

INSPECTION PROCEDURE

HINT: If diagnostic trouble codes ”22” (engine coolant temperature sensor circuit), ”24” (intake air temperature sensor circuit) and ”41” (throttle position sensor circuit) are output simultaneously, E2 (sensor ground) may be open.

1 **Check voltage between terminals THW and E2 of engine control module connector.**

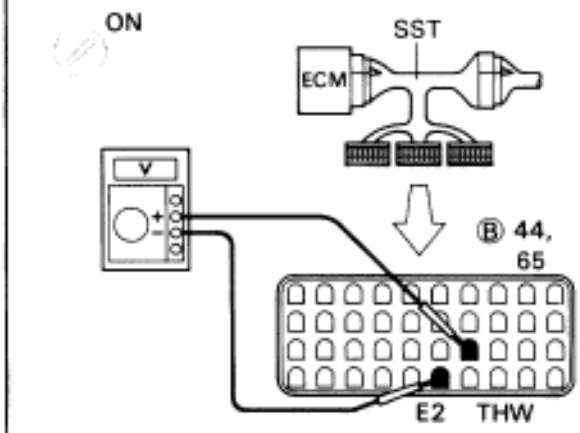

P (1) Connect SST (check harness “A”). (See page EG–404)
(2) Turn ignition switch ON.

C Measure voltage between terminals THW and E2 of engine control module connector.

OK

Engine Coolant Temp. °C (°F)	Voltage
20 (68) (Engine is cool)	0.5 – 3.4 V
80 (176) (Engine is hot)	0.2 – 1.0 V

NG

OK → **Check for intermittent problems. (See page EG–399)**

2 **Check engine coolant temp. sensor.**

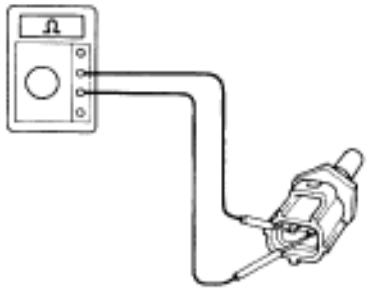

P Disconnect the engine coolant temp. sensor connector.

C Measure voltage between terminals.

OK **Resistance is within Acceptable Zone on chart.**

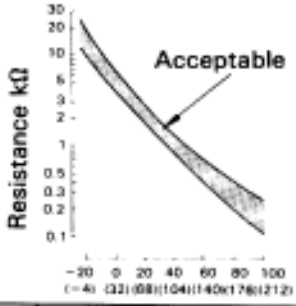

Engine Coolant Temp. °C (°F)	Resistance
20 (68)	2 – 3 kΩ
80 (176)	0.2 – 0.4 kΩ

OK

NG → **Replace engine coolant temp. sensor.**

3 **Check for open and short in harness and connector between engine control module and engine coolant temp. sensor (see page IN–30).**

OK

NG → **Repair or replace harness or connector.**

Check and replace engine control module.

DTC 24 Intake Air Temp. Sensor Circuit

CIRCUIT DESCRIPTION

The intake air temp. sensor is built into the volume air flow meter and senses the intake air temperature.
The structure of the sensor and connection to the ECM is the same as in the engine coolant temp. sensor shown on page EG–424.
If the ECM detects the diagnostic trouble code ”24”, it operates the fail safe function in which the intake air temperature is assumed to be 20˚C (68˚F).

DTC No.	Diagnostic Trouble Code Detecting Condition	Trouble Area
24	Open or short in intake air temp. sensor circuit for 0.5 sec. or more	• Open or short in intake air temp. sensor circuit • Intake air temp. sensor • ECM

WIRING DIAGRAM

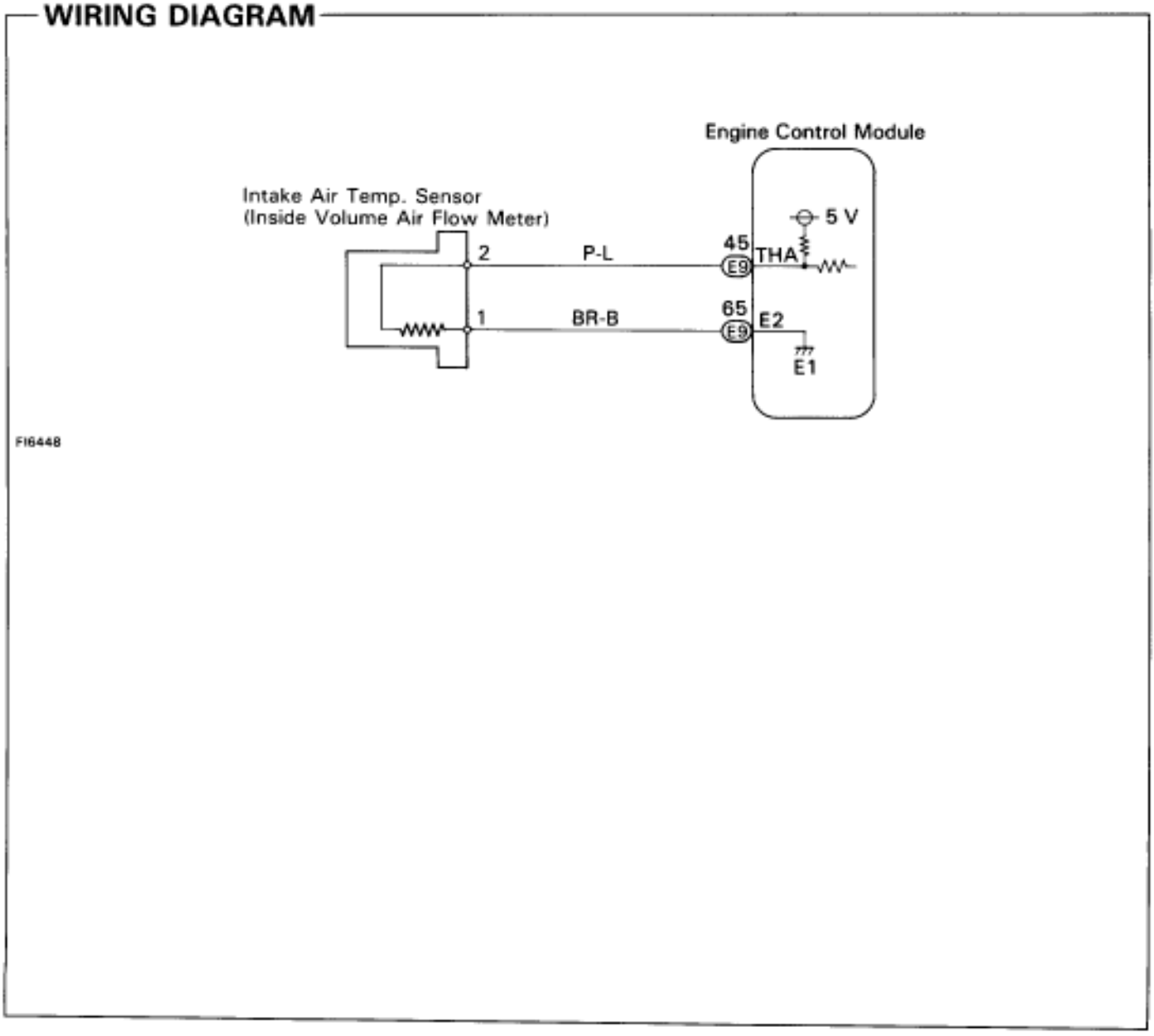

INSPECTION PROCEDURE

HINT: If diagnostic trouble codes ”22” (engine coolant temperature sensor circuit), ”24” (intake air temperature sensor circuit) and ”41” (throttle position sensor circuit) are output simultaneously, E2 (sensor ground) may be open.

1 **Check voltage between terminals THA and E2 of engine control module connector.**

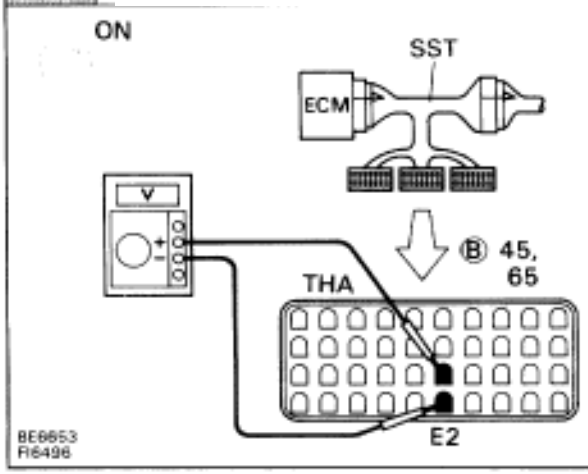

P (1) Connect SST (check harness “A”). (See page EG–404)
SST 09990–01000
(2) Turn ignition switch ON.

C Measure voltage between terminals THW and E2 of engine control module connector.

OK

Intake air temp. °C (°F)	Voltage
20 (68)	0.5 – 3.4 V
60 (140)	0.2 – 1.0 V

NG

OK → **Check for intermittent problems. (See page EG–399)**

2 **Check intake air temp. sensor.**

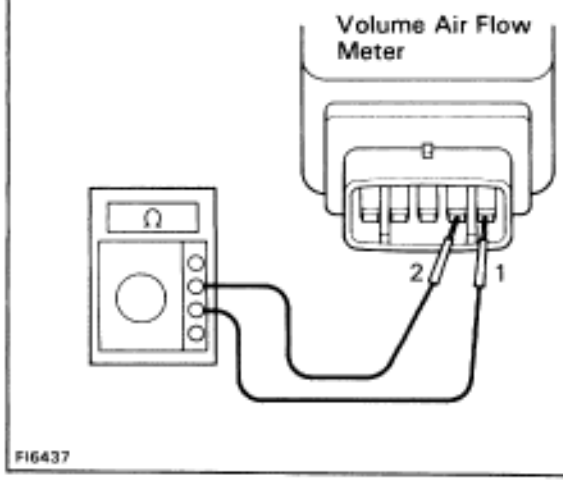

P Disconnect the volume air flow meter connector.

C Measure voltage between terminals 1 and 2 of volume air flow meter connector.

OK **Resistance is within Acceptable Zone on chart.**

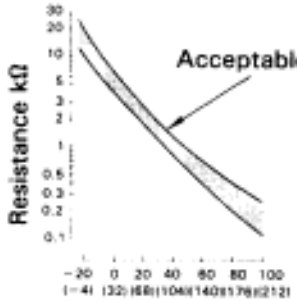

Intake air temp. °C (°F)	Resistance
20 (68)	2 – 3 kΩ
60 (14)	0.4 – 0.7 kΩ

OK

NG → **Replace intake air temp. sensor (Replace volume air flow meter).**

3 **Check for open and short in harness and connector between engine control module and intake air temp. sensor (See page IN–30).**

OK

NG → **Repair or replace harness or connector.**

Check and replace engine control module.

DTC 25 26 Air–Fuel Ratio Lean Rich Malfunction

CIRCUIT DESCRIPTION

See page EG–419 for the circuit description

DTC No.	Diagnostic Trouble Code Detecting Condition	Trouble Area
25	(1) (Main heated*1) oxygen sensor voltage is 0.45 V or less (lean) for 90 sec. under codi–tions (a) and (b): (2 trip detection logic)*2 (a) Engine coolant temp.: 70˚C (158˚F) or more (b) Engine speed: 1,500 rpm or more	• Open or short in (main heated*1) oxygen sensor circuit • (Main heated*1) oxygen sensor • Ignition system • ECM
	(2)*1 Difference of air–fuel ratio feedback compensation value between front (No. 1 ~ 3 cylinders) and rear (No. 4 ~ 6 cylinders) is more than 15 percentage for 20 sec. or more under conditions (a) and (b): (2 trip detection logic)*2 (a) Engine speed: 2,000 rpm or more (b) Engine coolant temp.: Between 60˚C (140˚F) and 95˚C (203˚F)	• Open and short in injector circuit • Fuel line pressure (injector leak, blockage) • Mechanical system malfunction (skipping teeth of timing belt) • Ignition system • Compression pressure (foreign object caught in valve) • Volume air flow meter (air intake) • ECM
	(3)*1 Engine speed varies by more than 15 rpm over the preceding crank angle period during a period of 20 sec. or more under conditions (a) and (b): (2 trip detection logic)*2 (a) Engine speed: Idling (b) Engine coolant temp.: Between 60˚C (140˚F) and 95˚C (203˚F)	• Open and short in injector circuit • Fuel line pressure (injector leak, blockage) • Mechanical system malfunction (skipping teeth of timing belt) • Ignition system • Compression pressure (foreign object caught in valve) • Volume air flow meter (air intake) • ECM
26	(1)*1 Difference of air–fuel ratio feedback compensation value between front (No. 1 ~ 3 cylinders) and rear (No. 4 ~ 6 cylinders) is more than 15 percentage for 20 sec. or more under conditions (a) and (b): (2 trip detection logic)*2 (a) Engine speed: 2,000 rpm or more (b) Engine coolant temp.: Between 60˚C (140˚F) and 95˚C (203˚F)	• Open and short in injector circuit • Fuel line pressure (injector leak, blockage) • Mechanical system malfunction (skipping teeth of timing belt) • Ignition system • Compression pressure (foreign object caught in valve) • Volume air flow meter (air intake) • ECM
	(2) Engine speed varies by more than 15 rpm over the preceding crank angle period during a period of 20 sec. or more under conditions (a) and (b): (2 trip detection logic)*2 (a) Engine speed: Idling (b) Engine coolant temp.: Between 60˚C (140˚F) and 95˚C (203˚F)	• Open and short in injector circuit • Fuel line pressure (injector leak, blockage) • Mechanical system malfunction (skipping teeth of timing belt) • Ignition system • Compression pressure (foreign object caught in valve) • Volume air flow meter (air intake) • ECM

*1: Only for California specification vehicles

*2: See page EG–397.

CIRCUIT DESCRIPTION (Cont'd)

DIAGNOSTIC TROUBLE CODE DETECTION DRIVING PATTERN

Purpose of the driving pattern.

(a) To simulate diagnostic trouble code detecting condition after diagnostic trouble code is recorded.

(b) To check that the malfunction is corrected when the repair is completed confirming that diagnostic trouble code is no longer detected.

Malfunction: Open or Short in (Main Heated*) Oxygen Sensor

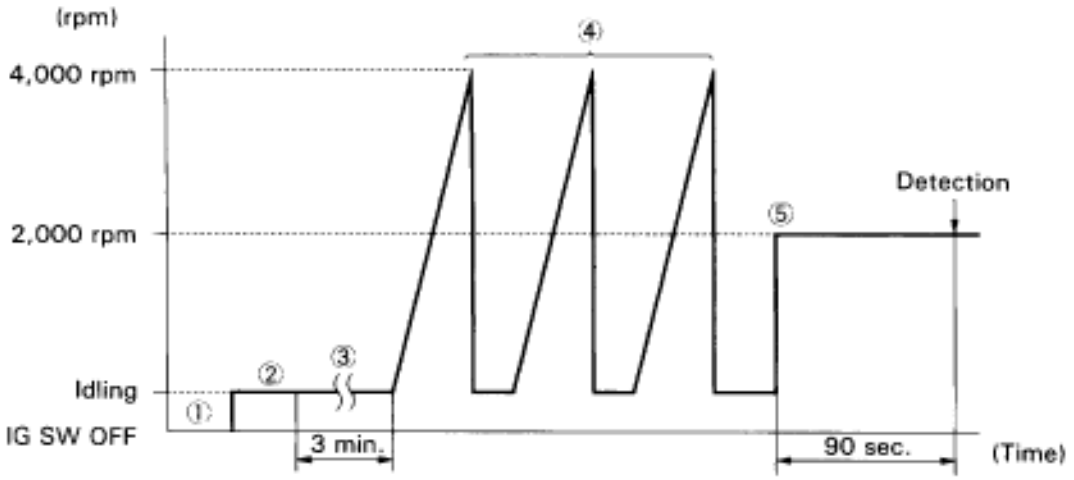

FI6485

HINT: Before this test, check the feedback voltage for oxygen sensor.

(1) Disconnect the EFI No.1 fuse (30 A) for 10 sec. or more, with IG switch OFF. Initiate test mode (Connect terminal TE2 and E1 of data link connector 2 with IG switch OFF).
(2) Start the engine and warm up.
(3) Idle the engine for 3 min.
(4) Race the engine at 2,000 rpm for 90 sec.

HINT: If a malfunction exists, the malfunction indicator lamp will light up during step (4).

NOTICE: If the conditions in this test are not strictly followed, detection of the malfunction will not be possible.

*: Only for California specification vehicles

CIRCUIT DESCRIPTION (Cont'd)

DIAGNOSTIC TROUBLE CODE DETECTION DRIVING PATTERN

Purpose of the driving pattern.

(a) To simulate diagnostic trouble code detecting condition after diagnostic trouble code is recorded.

(b) To check that the malfunction is corrected when the repair is completed confirming that diagnostic trouble code is no longer detected.

Malfunction: Open or Short in Injector circuit, Injector Leak or Blockage.

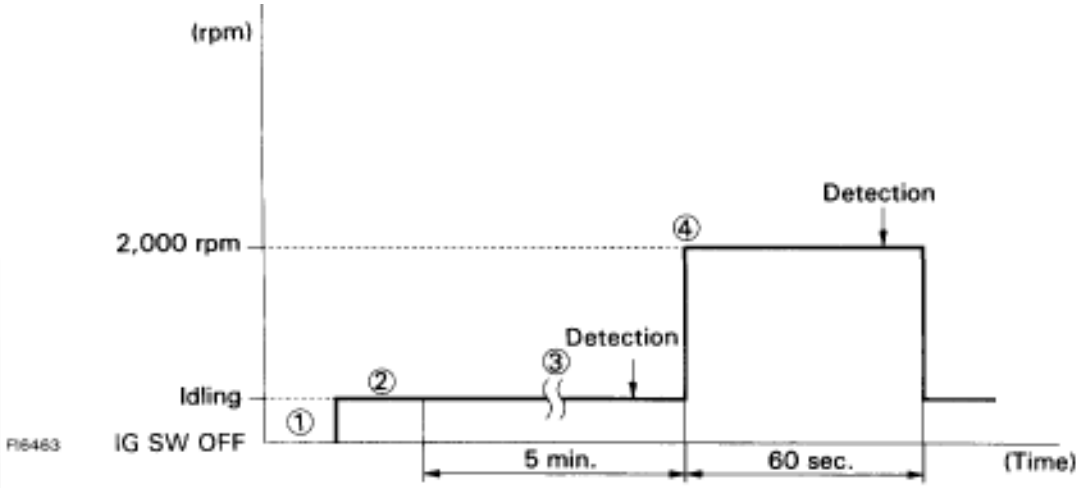

(1) Disconnect the EFI No.1 fuse (30A) for 10 sec. or more, with IG switch OFF.
Initiate test mode (Connect terminal TE2 and E1 of data link connector 2 with IG switch OFF).

(2) Start the engine and warm up with all ACC switched OFF.

(3) Idle the engine for 5 min.
(After the engine is started, do not depress the accelerator pedal.)

(4) If the malfunction is not detected during idling, racing the engine without any load at approx. 2,000 rpm for 60 sec.

HINT: If a malfunction exists, the malfunction indicator lamp will light up during the 5 min. idling period or within 60 sec. of starting racing.

NOTICE: If the conditions in this test are not strictly followed, detection of the malfunction will not be possible.

WIRING DIAGRAM

See page **EG–421** for the WIRING DIAGRAM.

*: Only for California specification vehicles

INSPECTION PROCEDURE

1 Check voltage between terminals VF1, VF2 and E1 of data link connector 1.

Front Side

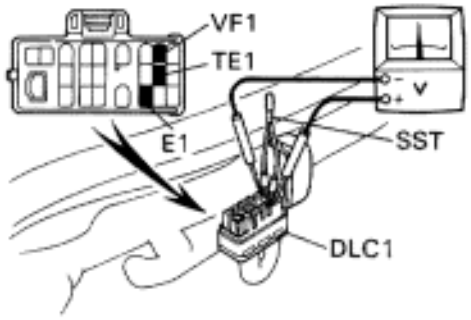

Rear Side

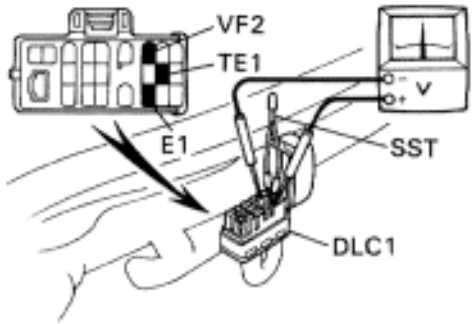

P11292
P11293

P
(1) Warm up engine to normal operating temperature.
(2) Using SST, connect terminal TE1 and E1 of data link connector 1.
SST 09843–18020
(3) Connect positive probe to terminal VF1, VF2 and negative probe to terminal E1 of data link connector 1.

C
(1) Warm up the oxygen sensor by racing engine at 2,500 rpm for about 2 minutes.
(2) Then, still maintaining engine at 2,500 rpm, count how many times voltmeter fluctuates needle between 0 and 5 V.

Result

Result	
Needle fluctuates 8 times or more for every ten seconds	OK
Continue at 0 V	NG Type I
Continue at 5 V	NG Type II

NG Type I

NG Type II → Go to step 7.

2 Check voltage between terminals OX1, OX2 and E1 of data link connector 1.

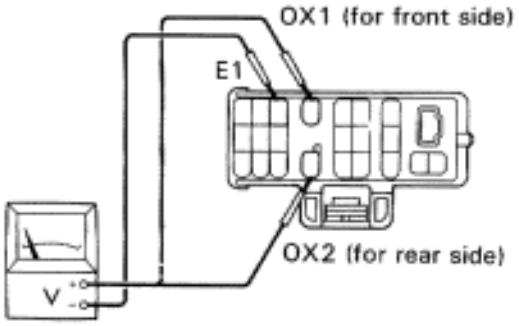

FI8595

P Warm up engine to normal operating temperature

C Measure voltage between terminals OX1, OX2 and E1 of data link connector 1 when engine is suddenly raced to full throttle.

OK **The voltage should be 0.5 V or higher at least once.**

Hint Inspection should not take longer 1 second.

NG

OK → Go to step 7.

3 **Check for open and short in harness and connector between engine control module and (main heated*) oxygen sensor, engine control module and data link connector 1 (see page IN–30).**

OK

NG → **Repair or replace harness or connector.**

4 **Check each item found to be a possible cause of problem.**

Check each circuit found to be a possible cause of trouble according to the results of the check in 1 or 2. The numbers in the table below show the order in which the checks should be done.

(Main heated*) oxygen sensor signal from either side continues at 0 V	(Main heated*) oxygen sensor signal from both sides continues at 0 V	Possible Cause	See page
1		Faulty sensor installation	–
3		Injector circuit	EG–47
2	3	Misfire	IG–4
4		Valve timing	EG–33
	1	Air leakage	EG–190
	2	Fuel system	EG–457
	6	Characteristics deviation in volume air flow meter	EG–438
	4	Characteristics deviation in engine coolant temp. sensor	EG–424
	5	Characteristics deviation in intake air temp. sensor	EG–426

OK

NG → **Repair or replace.**

5 **Check compression (See page EG–9).**

OK

NG → **Repair or replace.**

6 **Does malfunction disappear when a good (main heated*) oxygen sensor is installed?**

NG

YES → **Replace (main heated*) oxygen sensor.**

Check and replace engine control module.

*: Only for California specification vehicles

7 **Check each item found to be a possible cause of problem.**

Check each circuit found to be a possible cause of trouble according to the results of the check in 1. The numbers in the table below show the order in which the checks should be done.

(Main heated*) oxygen sensor signal from either side continues at 5.0 V	(Main heated*) oxygen sensor signal from both sides continues at 5.0 V	(Main heated*) oxygen sensor signals from both sides are normal	Possible Cause	See page
1		7	Injector circuit	EG–4
		3	Misfire	IG–4
2		4	Valve timing	EG–33
		1	Air leakage	EG–19
	1	2	Fuel system	EG–457
	4	8	Characteristics deviation in volume air flow meter	EG–438
	2	5	Characteristics deviation engine coolant temp. sensor	EG–424
	3	6	Characteristics deviation in intake air temp. sensor	EG–426

OK → NG → **Repair or replace.**

8 **Check compression (See page EG–9).**

OK → NG → **Repair or replace.**

9 **Does malfunction disappear when a good (main heated*) oxygen sensor is installed?**

NG → YES → **Replace (main heated*) oxygen sensor.**

Check and replace engine control module.

*: Only for California specification vehicles

DTC 27 Sub Heated Oxygen Sensor Circuit (Only for California spec.)

CIRCUIT DESCRIPTION

The sub heated oxygen sensor is installed on the exhaust pipe. Its construction and operation is the same as the main heated oxygen sensor on page EG–419.

DTC No.	Diagnostic Trouble Code Detecting Condition	Trouble Area
27	(1) Open or short in heater circuit of sub heated oxygen sensor for 0.5 sec. or more	• Open or short in heater circuit of sub heated oxygen sensor • Sub heated oxygen sensor heater • ECM
	(2) Main heated oxygen sensor signal is 0.45 V or more and sub heated oxygen sensor signal is 0.45 V or less under conditions (a) ~ (c): (2 trip detection logic)* (a) Engine coolant temp.: 80°C (176°F) or more (b) Engine speed: 1,500 rpm or more (c) Accel. pedal: Fully depressed for 2 sec. or more	• Open or short in sub heated oxygen sensor circuit • Sub heated oxygen sensor • ECM

*: See page EG–397.

CIRCUIT DESCRIPTION (Cont'd)

DIAGNOSTIC TROUBLE CODE DETECTION DRIVING PATTERN

Purpose of the driving pattern.

(a) To simulate diagnostic trouble code detecting condition after diagnostic trouble code is recorded.

(b) To check that the malfunction is corrected when the repair is completed confirming that diagnostic trouble code is no longer detected.

Malfunction: Open or Short in Sub Heated Oxygen Sensor

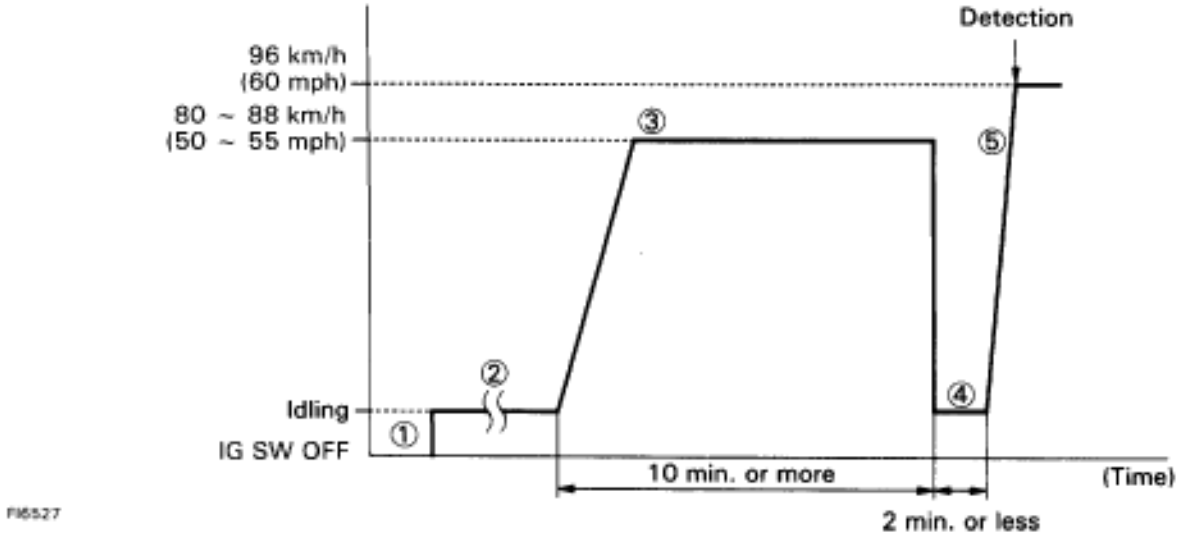

(1) Disconnect the EFI No.1 fuse (30A) for 10 sec. or more, with IG switch OFF. Initiate test mode (Connect terminal TE2 and E1 of data link connector 2 with IG switch OFF).
(2) Start the engine and warm up with all ACC switch OFF.
(3) Deive the vehicle at 80 ~ 88 km/h (50 ~ 55 mph) for 10 min. or more.
(4) Stop at a safe place and idle the engine for 2 min. or less.
(5) Accelerate to 96 km/h (60 mph) with the throttle valve fully open.

HINT: If a malfunction exists, the malfunction indicator lamp will light up during step (5).

NOTICE: If the conditions in this test are not strictly followed, detection of the malfunction will not be possible.

WIRING DIAGRAM

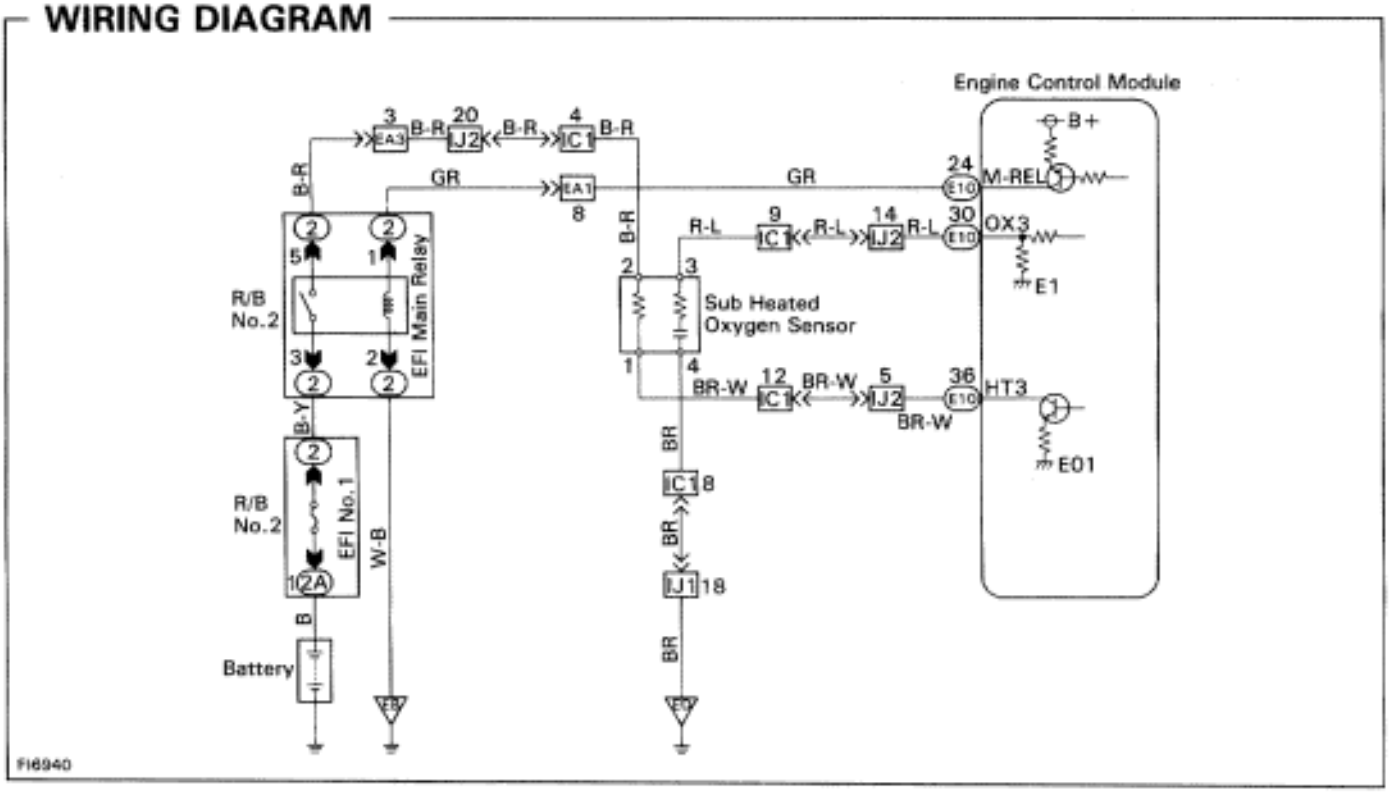

INSPECTION PROCEDURE

HINT: When other codes are output in addition to 27 at the same time, check the circuits for other codes first.

1 **Check voltage between terminal HT3 of engine control module connector and body ground.**

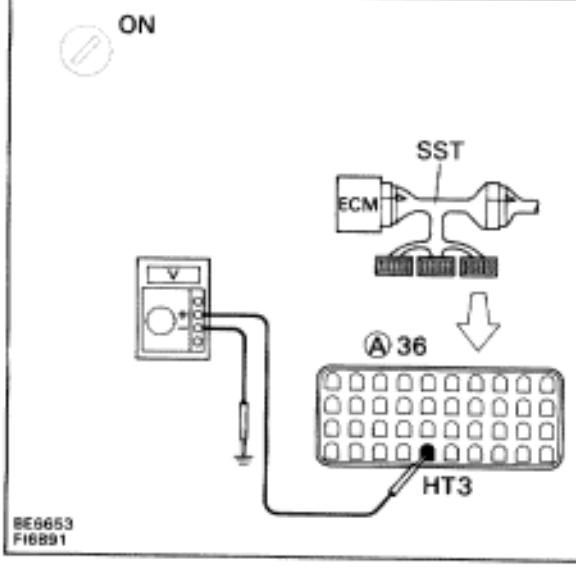

P (1) Connect SST (check harness “A”).
(See page EG–404)
SST 09990–01000
(2) Turn ignition switch ON.

C Measure voltage between terminal HT3 of engine control module connector and body ground.

OK **Voltage: 9 — 14 V**

NG

OK → Go to step **4**.

2 **Check sub heated oxygen sensor heater.**

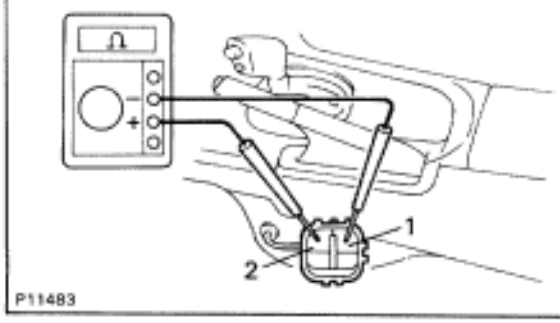

P Disconnect sub heated oxygen sensor connector. (See page EG–250)

C Measure resistance between terminals 1 and 2 of sub heated oxygen sensor connector.

OK **Resistance: 11 — 16 Ω at 20˚C (68˚F)**

OK

NG → **Replace sub heated oxygen sensor.**

3 **Check for open and short in harness and connector between EFI main relay and engine control module (See page IN–30).**

OK

NG → **Repair or replace harness or connector.**

Check and replace engine control module.

4 **Check voltage between terminal HT3 of engine control module connector and body ground.**

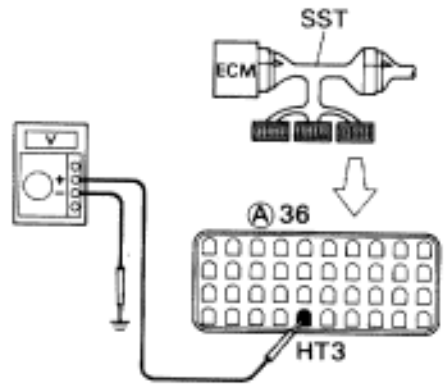

P Warm up engine to normal operating temperature.

C Measure voltage between terminal HT3 of engine control module connector and body ground, when engine is idling and racing at 3,500 rpm.

OK

	Voltage
Idling	0 V
Racing at 3,500 rpm	9 — 14 V

NG

OK → **Replace sub heated oxygen sensor.**

Check and replace engine control module.

*: **It is probable the oxygen sensor has deteriorated.**
Usually, this cannot be confirmed by visual inspection.

DTC 31 Volume Air Flow Meter Circuit

CIRCUIT DESCRIPTION

As shown in the figure at right, when a pillar (Vortex generating body is placed in the path of a uniform flow, vortices called Karman–Vortex are generated downstream of the object. Using this principle, a vortex generator is placed inside the volume air flow meter. By measuring the frequency of the vortices generated, the ECM can determine the volume of air flowing through the volume air flow meter. The vortices are detected by their exerting pressure on thin metal foil mirror) surfaces and a light emitting element and light receptor (LED and photo transistor) positioned opposite the mirror which optically senses the vibrations in the mirror. The ECM uses these signals mainly for calculation of the basic injection volume and the basic ignition advance angle.

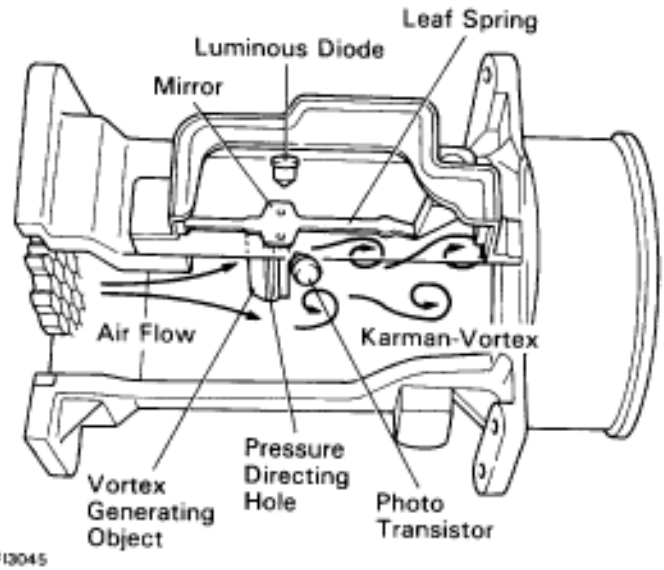



Karman-Vortex

FI4504

DTC No.	Diagnostic Trouble Code Detecting Condition	Trouble Area
31	All conditions below are detected: (a) No volume air flow meter signal to ECM for 2 sec. when engine speed is above 300 rpm (b) Engine stall	• Open or short in volume air flow meter circuit • Volume air flow meter • ECM

if the ECM detects diagnostic trouble code “31”, it operates the fail safe function, keeping the ignition timing and fuel injection volume constant and making it possible to drive the vehicle.

WIRING DIAGRAM

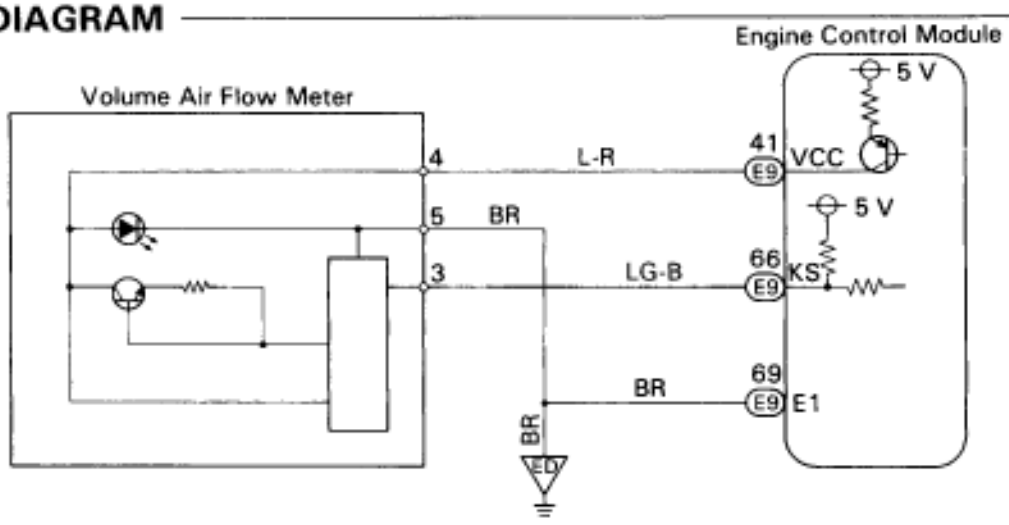

FI6880

INSPECTION PROCEDURE

1 **Check voltage between terminals KS and E1 of engine control module connector.**

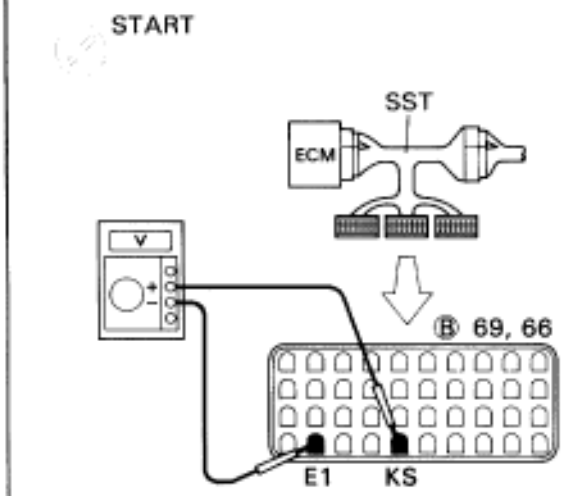

P Connect SST (check harness "A").
(See page EG–404)
SST 09990–01000

C Measure voltage between terminals KS and E1 of engine control module connector while engine is cranked.

OK **Voltage: 2.0 — 4.0 V**
(Neither 0 V nor 5 V)

Reference **INSPECTION USING OSCILLOSCOPE**

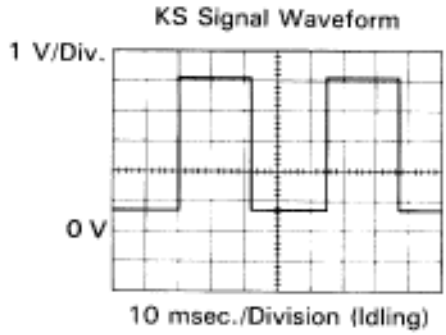

- During cranking or idling, measure waveform between terminals KS and E1 of engine control module.

HINT: The correct waveform is as shown.

NG

OK → **When diagnostic trouble code 31 is displayed, check and replace engine control module.**

2 **Check for open and short in harness and connector between engine control module and volume air flow meter (See page IN–30).**

OK

NG → **Repair or replace harness or connector.**

3 **Disconnect volume air flow meter connector and check voltage between terminals KS and E1 of engine control module connector.**

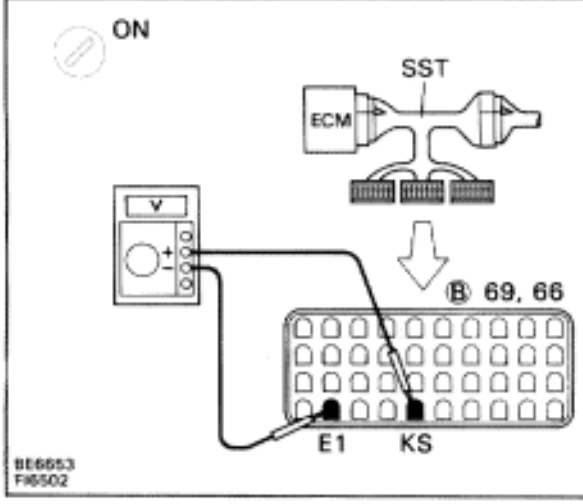

P (1) Disconnect the volume air flow meter connector.
(2) Turn ignition switch ON.

C Measure voltage between terminals KS and E1 of engine control module connector.

OK **Voltage: 4.5 — 5.5 V**

OK

NG → **Check and replace engine control module.**

4 **Disconnect volume air flow meter connector and check voltage between terminals VCC and E1 of engine control module connector.**

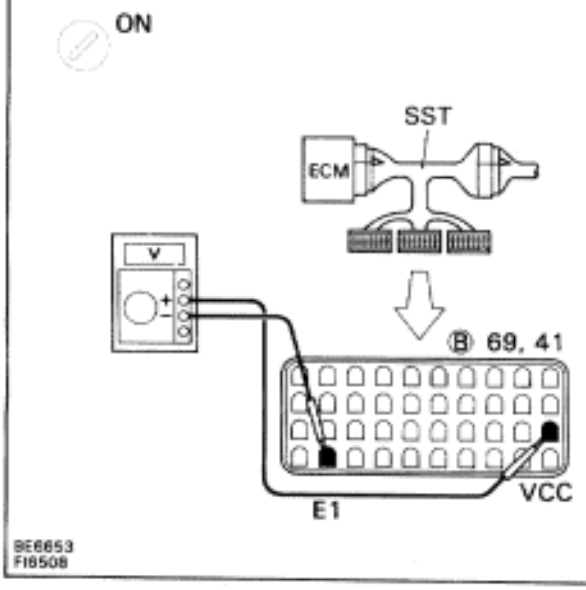

P (1) Disconnect the volume air flow meter connector.
(2) Turn ignition switch ON.

C Measure voltage between terminals VCC and E1 of engine control module connector.

OK **Voltage: 4.5 — 5.5 V**

NG

OK → **Replace volume air flow meter.**

Check and replace engine control module.

DTC 35 Barometric Pressure Sensor Circuit

CIRCUIT DESCRIPTION

The BARO sensor is built into the ECM. This is a semiconductor pressure sensor with properties which cause its electrical resistance to change when stress is applied to the sensor's crystal (silicon) (piezoelectric effect). This sensor is used to detect the atmospheric (absolute) pressure and outputs corresponding electrical signals. Fluctuations in the air pressure cause changes in the intake air density, which can cause deviations in the air–fuel ratio. The signals from BARO sensor are used to make corrections for these fluctuations. If the ECM detects diagnostic trouble code "35", the fail safe function operates and the atmospheric pressure is set at a constant 101.3 kPa (760 mmHg, 29.92 in.Hg).

DTC No.	Diagnostic Trouble Code Detecting Condition	Trouble Area
35	Open or short in BARO sensor circuit for 0.5 sec. or more	• ECM

INSPECTION PROCEDURE

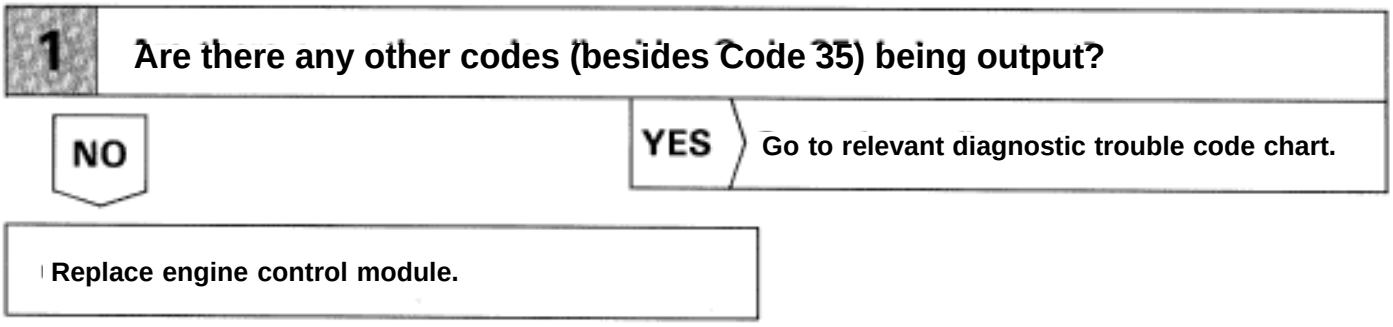

DTC 41 Throttle Position Sensor Circuit

CIRCUIT DESCRIPTION

The throttle position sensor is mounted in the throttle body and detects the throttle valve opening angle. When the throttle valve is fully closed, the IDL contacts in the throttle position sensor are on, so the voltage at the terminal IDL of the ECM becomes 0 V. At this time, a voltage of approximately 0.7 V is applied to the terminal VTA of the ECM. When the throttle valve is opened, the IDL contacts go off and thus the power source voltage of approximately 12 V in the ECM is applied to the terminal IDL of the ECM. The voltage applied to the terminal VTA of the ECM increases in the proportion to the opening angle of the throttle valve and becomes approximately 3.2 – 4.9 V when the throttle valve is fully opened. The ECM judges the vehicles driving conditions from these signals input from the terminals VTA and IDL, and uses them as one of the conditions for deciding the air–fuel ratio correction, power increase correction and fuel–cut control etc.

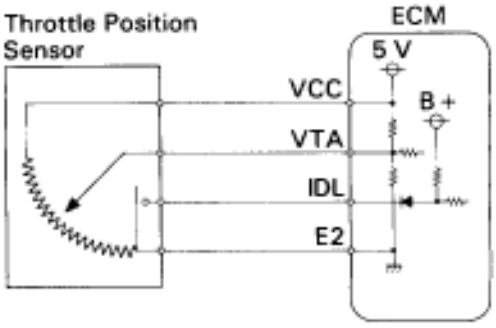

DTC No.	Diagnostic Trouble Code Detecting Condition	Trouble Area
41	Open or short in throttle position sensor circuit for 0.5 sec. or more	• Open or short in throttle position sensor circuit • Throttle position sensor • ECM

HINT:
- When the connector for the throttle position sensor is disconnected, diagnostic trouble code 41 is not displayed. Diagnostic trouble code 41 is displayed only when there is an open or short in the VTA signal circuit of the throttle position sensor.

WIRING DIAGRAM

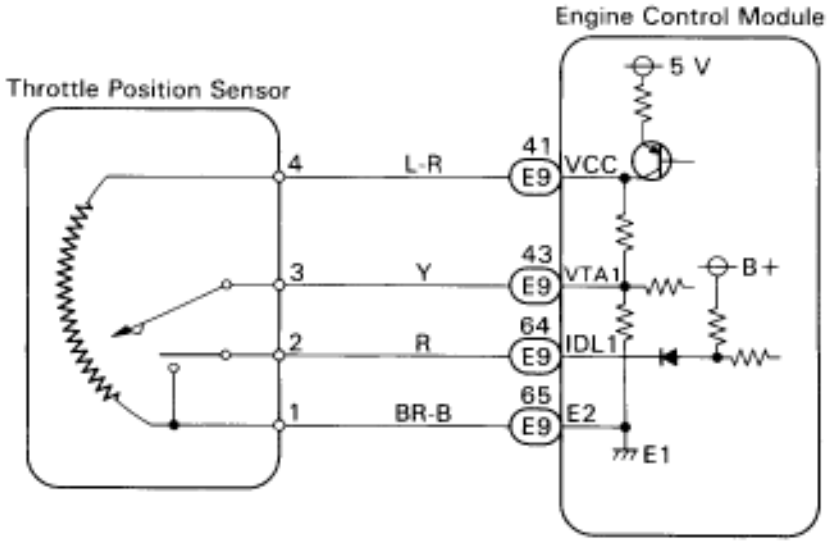

INSPECTION PROCEDURE

HINT:

- If diagnostic trouble code ”22” (engine coolant temperature sensor circuit), ”24” (intake air temperature sensor circuit) and ”41” (throttle position sensor circuit) are output simultaneously, E2 (sensor ground) may be open.

1 **Check voltage between VTA1, IDL1 and E2 of engine control module connector.**

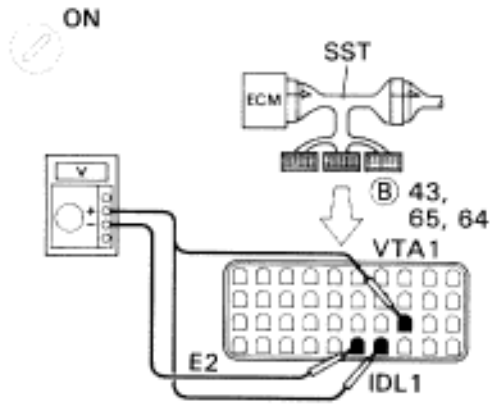

P (1) Connect SST (check harness “A”).
(See page EG–404)
SST 09990–01000
(2) Turn ignition switch ON.
(3) Disconnect the vacuum hose from the throttle body, then apply vacuum to the throttle opener. (See page EG–219)

C Measure voltage between terminals VTA1, IDL1 and E2 of engine control module connector when the throttle valve is opened gradually from the closed condition.

OK

Terminal / Throttle Valve	VTA1 – E2	IDL1 – E2
Fully Closed	0.3 – 0.8 V	0 – 3.0 V
Fully Open	3.2 – 4.9 V	9 – 14 V

Hint The voltage should increase steadily in proportion to the throttle valve opening angle.

NG

OK **Check for intermittent problems. (See page EG–399)**

2 Check throttle position sensor

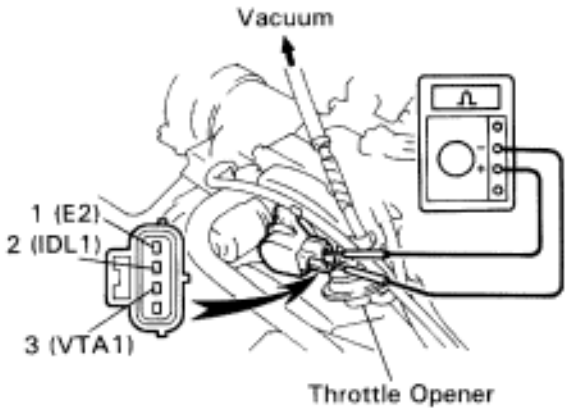

P (1) Disconnect throttle position sensor connector.
(2) Disconnect the vacuum hose from the throttle body, then apply vacuum to the throttle opener. (See page EG–219)

C Measure resistance between terminals 3 (VTA1), 2 (IDL1) and 1 (E2) of throttle position sensor connector when the throttle valve is opened gradually from the closed condition.

OK

Terminal / Throttle Valve	3 (VTA1) – 1 (E2)	2 (IDL1) – 1 (E2)
Fully Closed	0.3 – 6.3 kΩ	Less than 0.5 kΩ
Fully Open	2.4 – 11.2 kΩ	1 MΩ or higher

Hint Resistance between terminals 3 (VTA1) and 1 (E2) should increase gradually in accordance with the throttle valve opening angle.

OK

NG **Adjust or replace throttle position sensor. (see page EG–223)**

3 Check for open and short in harness and connector between engine control module and throttle position sensor (See page IN30).

OK

NG **Repair or replace harness or connector.**

Check and replace engine control module.

DTC 42 No.1 Vehicle Speed Sensor Signal Circuit

CIRCUIT DESCRIPTION

The No.1 vehicle speed sensor outputs a 4–pulse signal for every revolution of the rotor shaft, which is rotated by the transmission output shaft via the driven gear. After this signal is converted into a more precise rectangular waveform by the waveform shaping circuit inside the odometer and trip meter, it is then transmitted to the engine control module. The ECM determines the vehicle speed based on the frequency of these pulse signals.

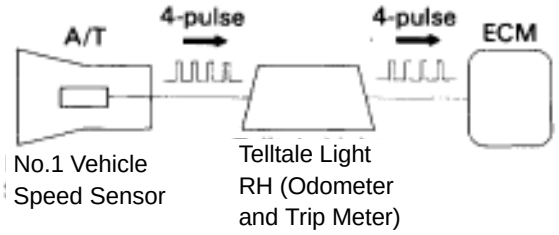

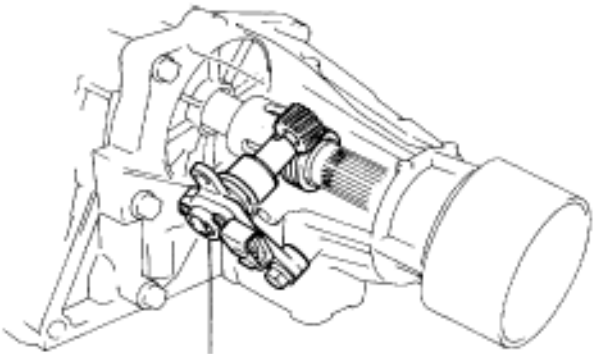
No.1 Vehicle Speed Sensor

FI6643 FI6644

DTC No.	Diagnostic Trouble Code Detecting Condition	Trouble Area
42	For A/T All conditions below are detected continuously for 8 sec. or more: (a) No.1 vehicle speed signal: 0 km/h (mph) (b) Engine speed: 3,000 rpm or more (c) Park/neutral position switch: OFF (d) Stop light switch: OFF	• No.1 Vehicle speed sensor • Telltale light RH (Odometer and trip meter) • Open or short in No.1 vehicle speed sensor circuit • ECM
	For A/T All conditions below are detected continuously for 8 sec. or more: (a) No.1 vehicle speed signal: 0 km/h (mph) (b) Engine speed: Between 2,000 rpm and 5,000 rpm (c) Engine coolant temp.: 80˚C (176˚F) or more (d) Load driving	

HINT: In test mode, diagnostic trouble code 42 is output when vehicle speed is 5 km/h (3 mph) or below.

Reference

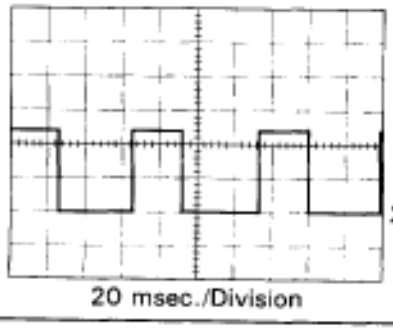

- Waveform between terminals SP1 and E1 when vehicle speed is approx. 20 km/h (12mph).

HINT: As the vehicle speed increases, the number of signals from SP1 increases.

WIRING DIAGRAM

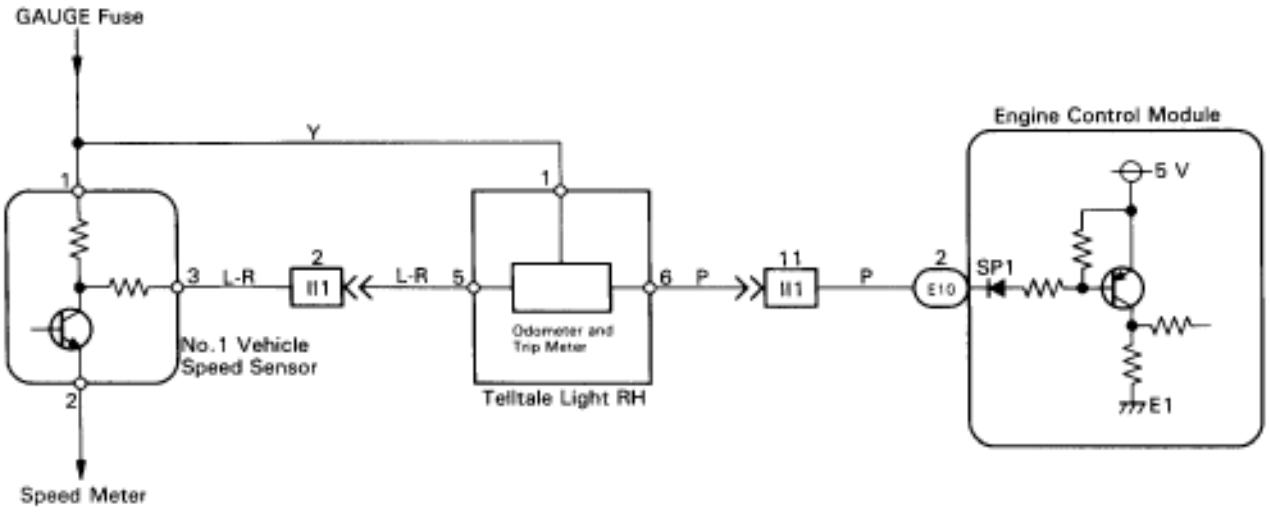

FI6931

INSPECTION PROCEDURE

1 **Check voltage bertween terminal SP1 of engine control module connector and body ground.**

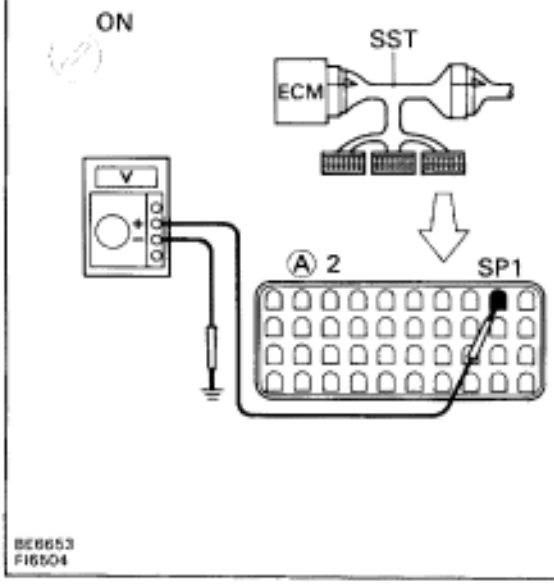

P
(1) Shift the shift lever to N position.
(2) Jack up one of the rear wheel.
(3) Connect SST (check harness “A”).
(See page EG–404)
SST 09990–01000
(4) Disconnect power steering ECU connector and cruise control ECU connector.
(5) Turn ignition switch ON.

C
Measure voltage between terminal SP1 of engine control module connector and body ground when the wheel is turned slowly.

OK
Voltage is generated intermittently.

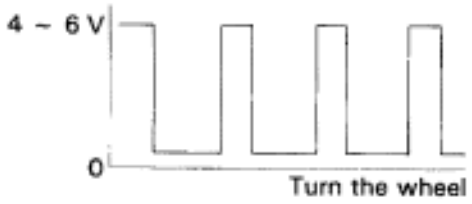

NG

OK → **Check and replace engine control module.**

2 **Check operation of odometer and trip meter (telltale light RH (See page BE–48)).**

NG

OK → **Repair or replace harness or connector between ECM and telltale light RH.**

3 **Check operation of No.1 vehicle speed sensor (See page BE–46).**

NG

OK → **Repair or replace harness or connector between telltale light RH and No.1 vehicle speed sensor.**

Replace No.1 vehicle speed sensor.

DTC 43 Starter Signal Circuit

CIRCUIT DESCRIPTION

When the engine is being cranked, the intake air flow is slow, so fuel vaporization is poor. A rich mixture is therefore necessary in order to achieve good startability. While the engine is being cranked, the battery positive voltage is applied to terminal STA of the ECM. The starter signal is mainly used to increase the fuel injection volume for the starting injection control and after–start injection control.

DTC No.	Diagnostic Trouble Code Detecting Condition	Trouble Area
43	No starter signal to ECM	• Open or short in starter signal circuit • Open or short in ignition switch or starter relay circuit • ECM

WIRING DIAGRAM

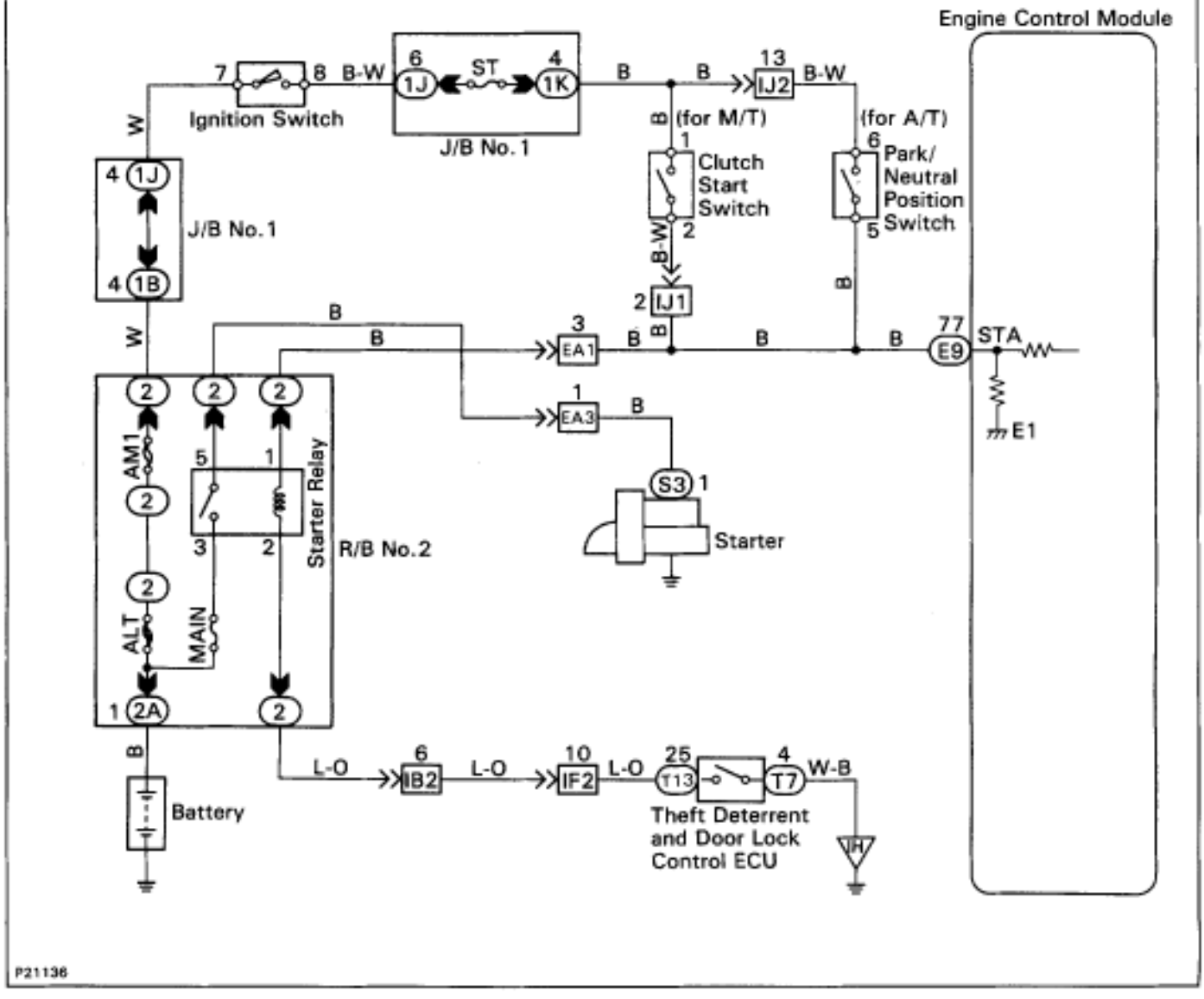

INSPECTION PROCEDURE

HINT: This diagnostic chart is based on the premise that the engine is being cranked under normal conditions.
If the engine does not crank, proceed to the matrix chart of problem symptoms on page EG–408.

1 Check output condition of diagnostic trouble code 43.



FI6914

P Setting the test mode.
(1) Turn ignition switch OFF.
(2) Connect terminals TE2 and E1 of DLC2.
(3) Turn ignition switch ON.
(Don't start the engine)
(4) Connect terminals TE1 and E1 of DLC2.

C Check if code "43" is output by the malfunction indicator lamp.

OK **Code "43" is output.**

C Start the engine.
Check if code "43" disappears.

OK **Code "43" is not output.**

NG

OK → **Proceed to next circuit inspection shown on matrix chart (See page EG–408).**

2 Check for open in harness and connector between engine control module and starter relay (See page IN–30).

OK

NG → **Repair or replace harness or connector.**

Check and replace engine control module.

DTC 52 53 55 Knock Sensor Circuit

CIRCUIT DESCRIPTION

Knock sensors are fitted one each to the front and rear of the left side of the cylinder block to detect engine knocking. This sensor contains a piezoelectric element which generates a voltage when it becomes deformed, which occurs when the cylinder block vibrates due to knocking. If engine knocking occurs, ignition timing is retarded to suppress it.

DTC No.	Diagnostic Trouble Code Detecting Condition	Trouble Area
52	No No.1 knock sensor signal to ECM for 4 crank revolutions with engine speed between 1,600 rpm and 5,200 rpm	• Open or short in No.1 knock sensor circuit • No.1 knock sensor (looseness) • ECM
53	Engine control computer (for knock control) malfunction at engine speed between 650 rpm and 5,200 rpm	• ECM
55	No No.2 knock sensor signal to ECM for 4 crank revolutions with engine speed between 1,600 rpm and 5,200 rpm	• Open or short in No.2 knock sensor circuit • No.2 knock sensor (looseness) • ECM

If the ECM detects the above diagnosis conditions, it operates the fail safe function in which the corrective retard angle value is set to the maximum value.

DIAGNOSTIC TROUBLE CODE DETECTION DRIVING PATTERN

Purpose of the driving pattern.

(a) To simulate diagnostic trouble code detecting condition after diagnostic trouble code is recorded.
(b) To check that the malfunction is corrected when the repair is completed by confirming that diagnostic trouble code is no longer detected.

Malfunction: Open or Short in Knock Sensor

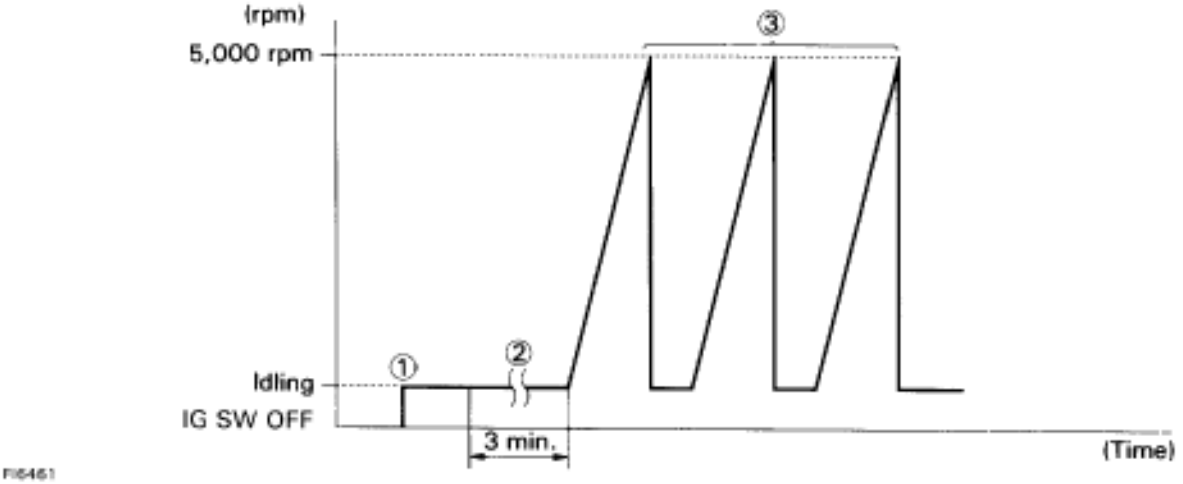

(1) Start the engine and warm up.
(2) Idle the engine for 3 min.
(3) With the A/C ON, race the engine quickly to 5,000 rpm 3 times.
(Rapidly depress the accelerator pedal and suddenly release it.)

HINT: If a malfunction exists, the malfunction indicator lamp will light up when sudden racing is performed.

NOTICE: If the conditions in this test are not strictly followed, detection of the malfunction will not be possible.

WIRING DIAGRAM

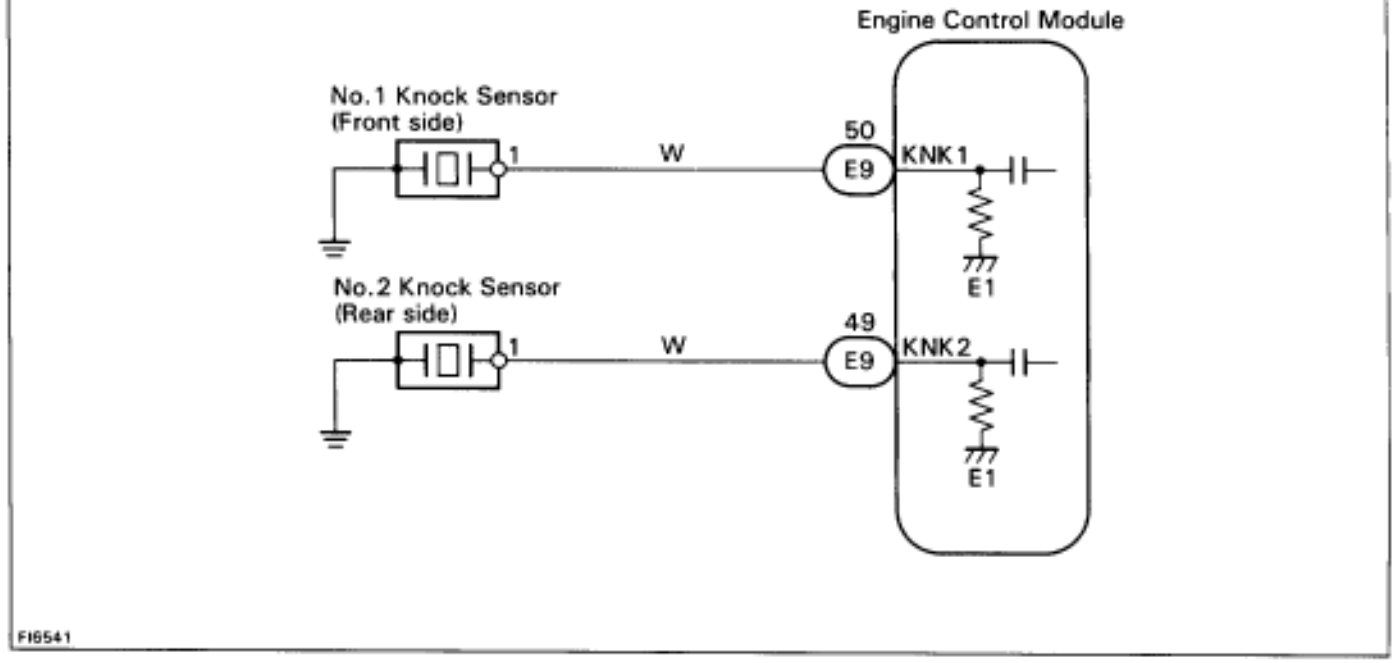

INSPECTION PROCEDURE

HINT: If diagnostic trouble code 52 is displayed, check No.1 knock sensor (for front side) circuit.
If diagnostic trouble code 55 is displayed, check No.2 knock sensor (for rear side) circuit.
If diagnostic trouble code 53 is displayed, replace engine control module.

1 **Check continuity between terminals KNK1, KNK2 of engine control module connector and body ground.**

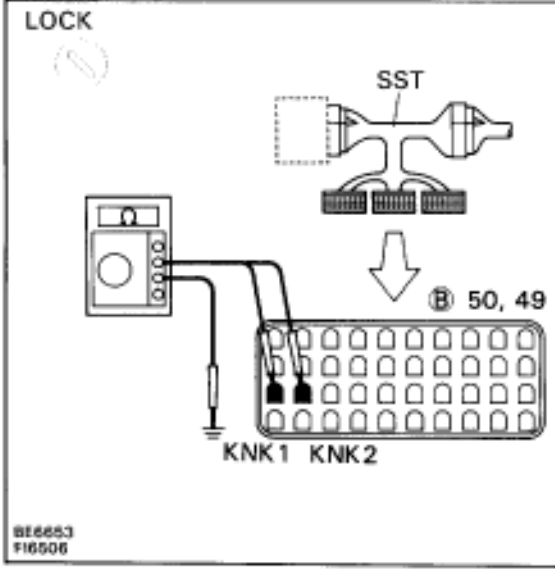

P (1) Connect SST (check harness “A”).
(See page EG–404)
SST 09990–01000
(2) Disconnect the engine control modulecon–nectors.

C Measure resistance between terminals KNK1, KNK2 of engine control module connector and body ground.

OK **Resistance: 1 MΩ or higher**

NG

OK 〉 Go to step **3** .

2 **Check knock sensor.**

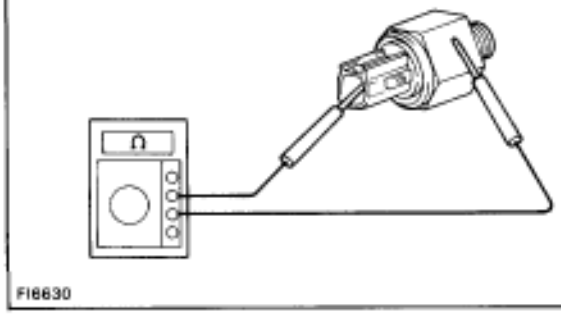

P Disconnect knock sensor connector.

C Measure resistance between the knock sensor terminal and body.

OK **Resistance: 1 MΩ or higher**

OK

NG → **Replace knock sensor. (See page EG–245)**

3 **Check for open and short in harness and connector between engine control module and knock sensor (See page IN–30).**

OK

NG → **Repair or replace harness of connector.**

4 **Does malfunction disappear when a good knock sensor is installed?**

NO

YES → **Replace knock sensor. (See page EG–245)**

Check and replace engine control module.

Reference **INSPECTION USING OSCILLOSCOPE**

KNK Signal Waveform

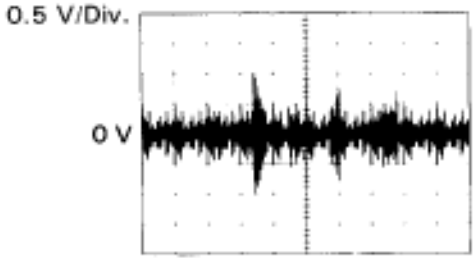

5 msec./Division

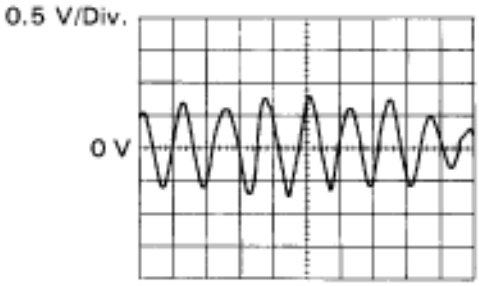

100 Ωsec./Division

FI6510
FI6642

- With the engine racing (4,000 rpm) measure wave–form between terminals KNK1, KNK2 of engine control module and body ground.

HINT: The correct waveform is as shown.

- Spread the time on the horizontal axis, and confirm that the period of the wave is 123 Ωsec. (Normal mode vibration frequency of knock sen–sor: 8.1 KHz).

HINT: If normal mode vibration frequency is not 8.1 KHz, the sensor is malfunctioning.

DTC 71 EGR System Malfunction

CIRCUIT DESCRIPTION

The EGR system is designed to recirculate the exhaust gas, controlled according to the driving conditions, back into the intake air–fuel mixture. It helps to slow down combustion in the cylinder and thus lower the combustion temperature which, in turn, reduces the amount of NOx emission. The amount of EGR is regulated by the EGR vacuum modulator according to the load.

If even one of the following conditions is fulfilled, the VSV is turned ON by a signal from the ECM. This results in atmospheric air acting on the EGR valve, closing the EGR valve and shutting off the exhaust gas (EGR cut–OFF).

- Engine coolant temp. below 50˚C (122˚F)
- During deceleration (Throttle valve closed)
- Light engine load (amount of intake air very small).
- Engine speed over 5,200 rpm
- Traction control is operating

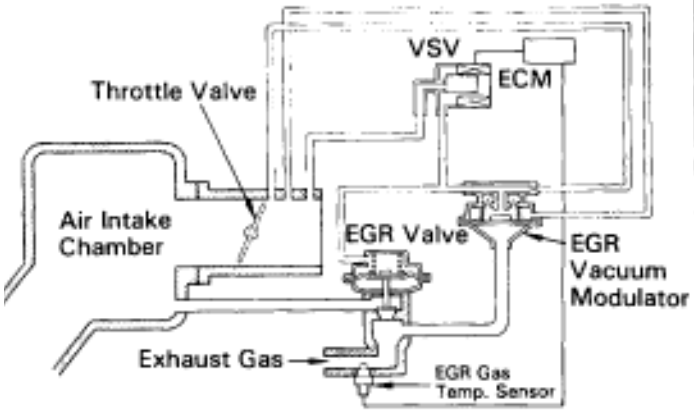

FI6895

DTC No.	Diagnostic Trouble Code Detecting Condition	Trouble Area
71	EGR gas temp. is 70˚C (158˚F) or less for 1 ~ 4 min. under conditions (a) and (b): (2) trip detection logic)* (a) Engine coolant temp.: 63˚C (145˚F) or more (b) EGR operation possible (Example A/T in 3rd speed (5th for M/T), A/C ON, 96 km/h (60 mph), Flat road)	• Open in EGR gas temp. sensor circuit • Short in VSV circuit for EGR • EGR hose disconnected, valve stuck • Clogged EGR gas passage • ECM

(See page EG–397).

DIAGNOSTIC TROUBLE CODE DETECTION DRIVING PATTERN

Purpose of the driving pattern.

(a) To simulate diagnostic trouble code detecting condition after diagnostic trouble code is recorded.

(b) To check that the malfunction is corrected when the repair is completed by confirming that diagnostic trouble code is no longer detected.

CIRCUIT DESCRIPTION (Cont'd)

Malfunction: Open in EGR Gas Temp. Sensor Circuit

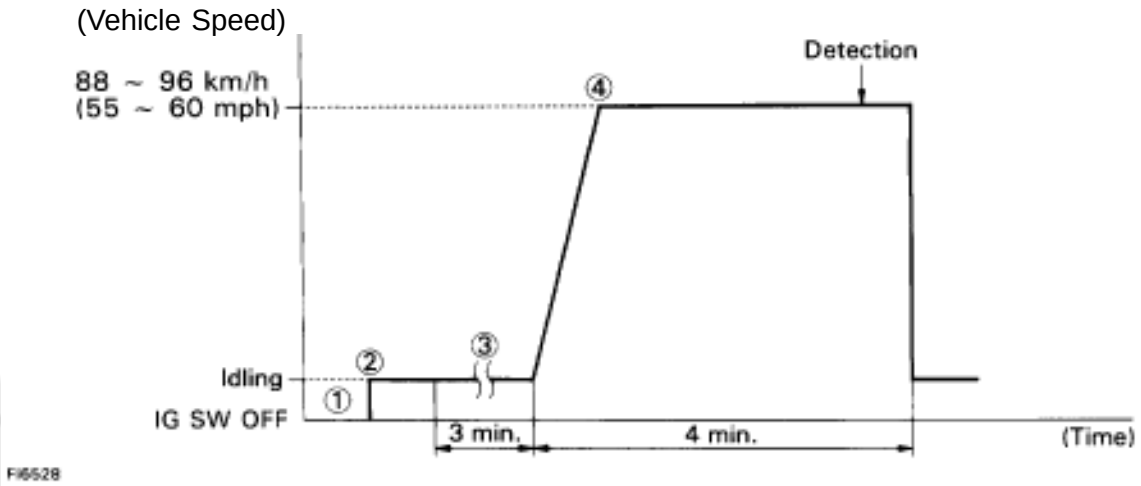

(1) Disconnect the EFI No.1 fuse (30A) for 10 sec. or more, with IG switch OFF. Initiate test mode (Connect terminal TE2 and E1 of data link connector 2 with IG switch OFF).
(2) Start engine and warm up.
(3) Idle the engine for 3 min.
(4) With the A/C ON and transmission in 5th position (A/T in 3rd speed) drive at 88 ~ 96 km/h (55 ~ 60 mph) for 4 min. or less.

HINT: If a malfunction exists, the malfunction indicator lamp will light up during step (4).

NOTICE: If the conditions in this test are not strictly followed, detection of the malfunction will not be possible.

WIRING DIAGRAM

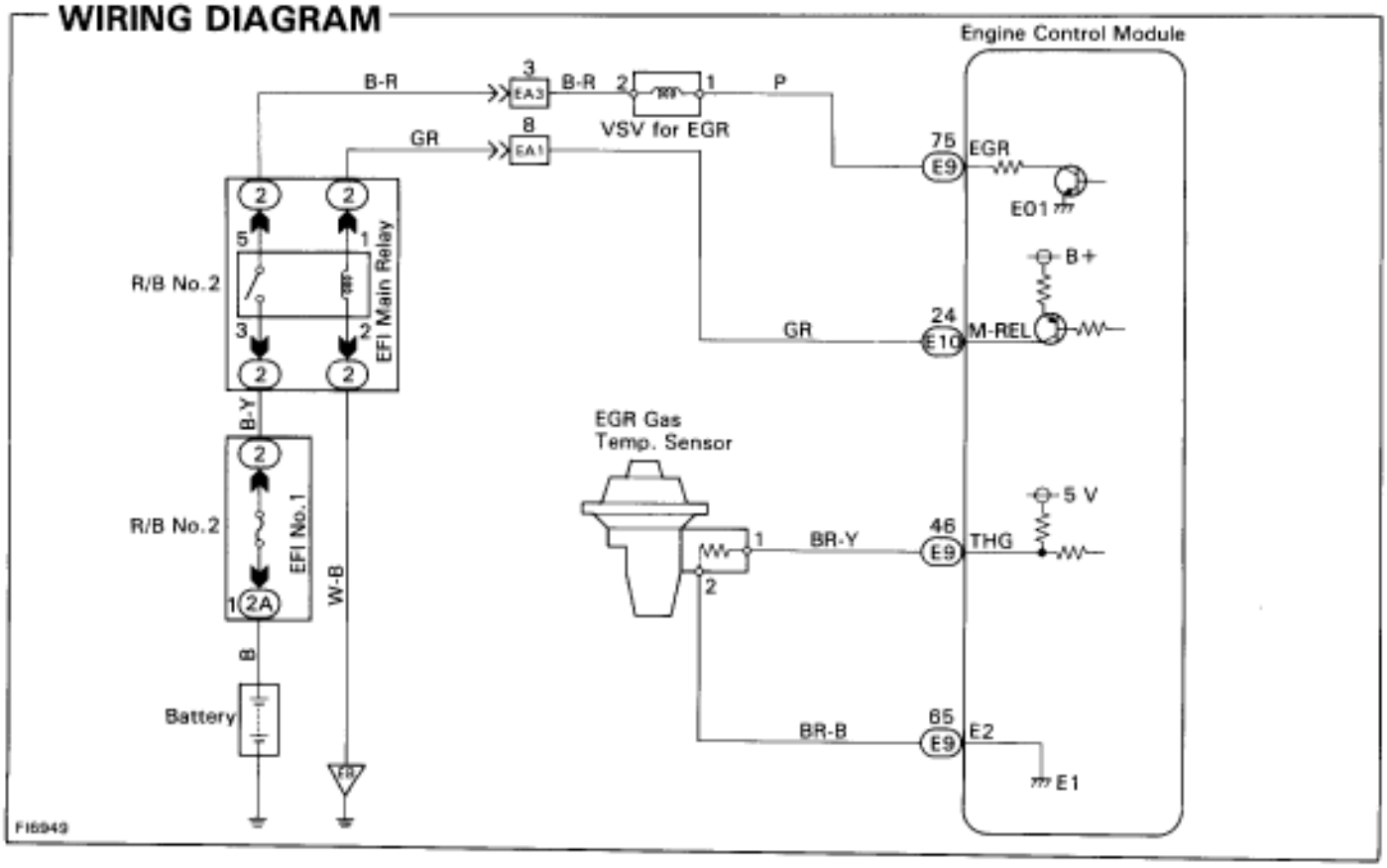

INSPECTION PROCEDURE

1 **Check voltage between terminal EGR of engine control module connector and body ground.**

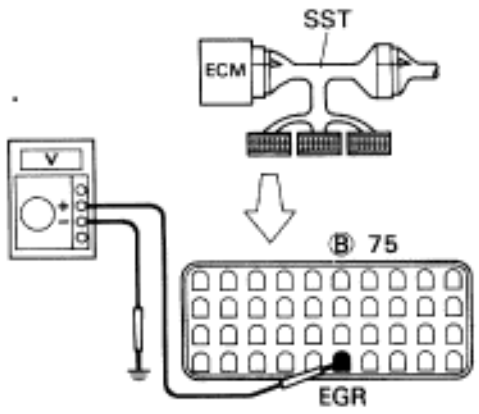

P (1) Connect SST (check harness “A”). (See page EG–404)
SST 09990–0100
(2) Warm up engine to normal operating temperature.

C Measure voltage between terminal EGR of engine control module connector and body ground.

OK **Voltage: 9 — 14 V**

NG

OK > **Go to step 4.**

2 **Check resistance between terminals of VSV for EGR.**

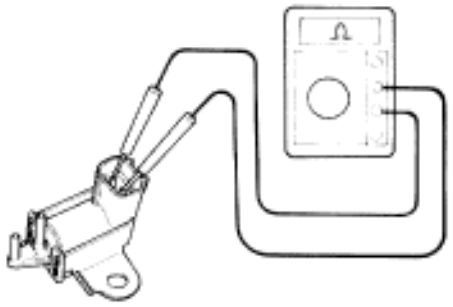

P Remove VSV for EGR. (See page EG–240)

C Measure resistance between terminals of VSV for EGR.

OK **Resistance: 38.5 — 44.5 Ω at 20˚C (68˚F)**

OK

NG > **Replace VSV for EGR.**

3 **Check for open and short in harness and connector between EFI main relay and VSV for EGR, VSV for EGR and engine control module. (See page IN–30)**

OK

NG > **Repair or replace harness of connector.**

Check and replace engine control module.

4 Check EGR system (See page Eg–168).

OK

NG → Repair EGR system.

5 Check resistance of EGR gas temp. sensor.

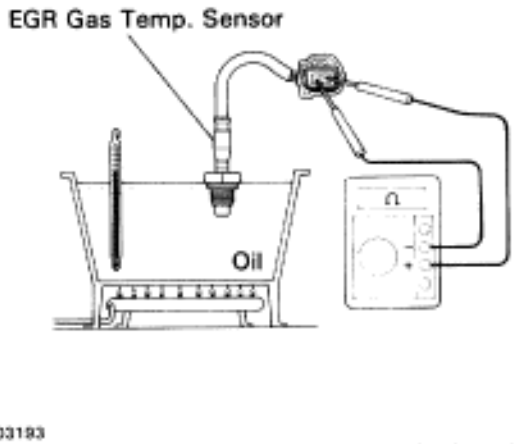

P Remove EGR gas temp. sensor.

C Measure resistance between terminals of EGR gas temp. sensor connector.

OK **Resistance: 64 — 97 kΩ at 50°C (122°F)**
11 — 16 kΩ at 100°C (1212°F)
2 — 4 kΩ at 150°C (302°F)

OK

NG → Replace EGR gas temp. sensor.

6 Check for open in harness and connector between EGR gas temp. sensor and engine control module. (See page IN–30)

OK

NG → Repair or replace harness or connector.

Check and replace engine control module.

DTC 78 Fuel Pump Control Circuit

CIRCUIT DESCRIPTION

The fuel pump speed is controlled at 2 steps (high speed, low speed) by the condition of the engine (starting, light load, heavy load), when the engine starts (STA ON), the engine control module sends a Hi signal (battery positive voltage) to the fuel pump ECU (FPC terminal).
The fuel pump ECU then outputs Hi voltage (battery positive voltage) to the fuel pump so that the fuel pump operates at high speed.
After the engine starts, during idling or light loads, the engine control module outputs a Low signal (about 9 V) to the fuel pump ECU, the fuel pump ECU outputs Lo battery voltage (about 9 V) to the fuel pump and causes the fuel pump to operate at low speed.
If the intake air volume increases (high engine load), the engine control module sends a Hi signal to the fuel pump ECU and causes the fuel pump to operate at high speed.

DTC No.	Diagnostic Trouble Code Detecting Condition	Trouble Area
78	(1) Open or short in fuel pump circuit for 1 sec. Or more with engine speed 1,000 rpm or less (2 trip detection logic)*	• Open or short in fuel pump ECU circuit • Fuel pump ECU • Engine control module power source circuit • Fuel pump • Engine control module
	2) Open in input circuit of fuel pump ECU (FPC) with engine speed 1,000 rpm or less (2 trip detection logic)*	
	(3) Open or short in diagnostic signal line (DI) of fuel pump ECU with engine speed 1,000 rpm or less (2 trip detection logic)*	

*: See page EG–397.

WIRING DIAGRAM

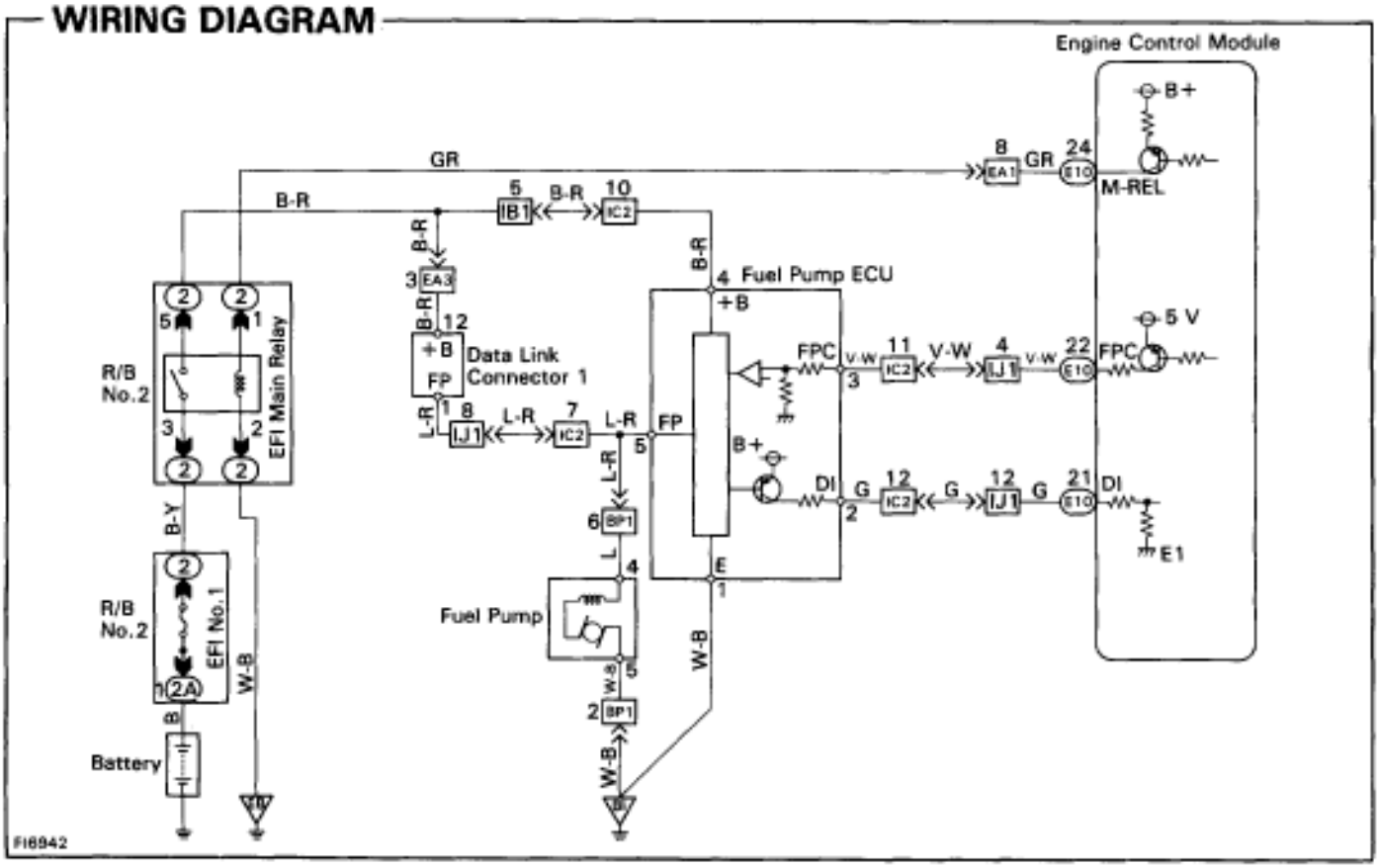

INSPECTION PROCEDURE

1 Check fuel pump operation.

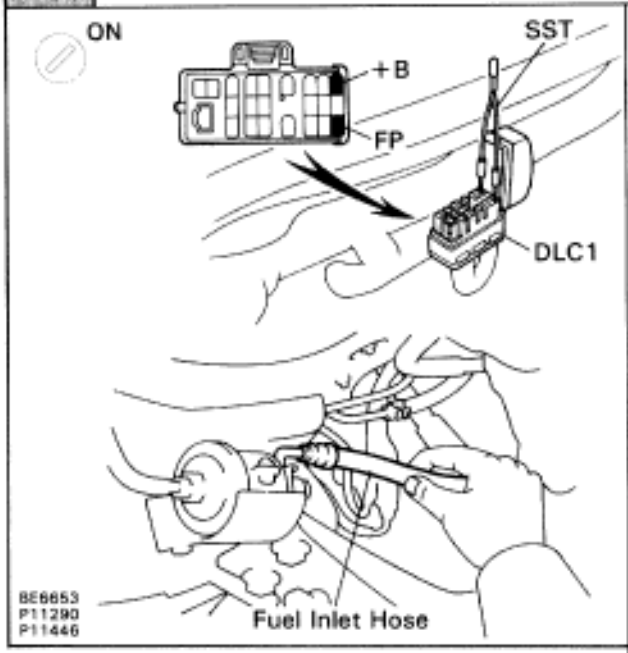

P (1) Turn ignition switch ON.
(2) Using SST, connect terminals +B and FP of data link connector1.
SST 09843–18020

C Check that there is pressure in the hose from the fuel filter.

OK **Fuel pressure can be felt.**

OK

NG → Go to step 3.

2 Check for open and short in harness and connector between terminals +B ↔ +B, FP ↔ FP of the data link connector 1 and fuel pump ECU (See page IN–30).

NG

OK → Go to step 5.

Repair or replace harness or connector.

3 Check voltage of terminal +B of data link connector 1.

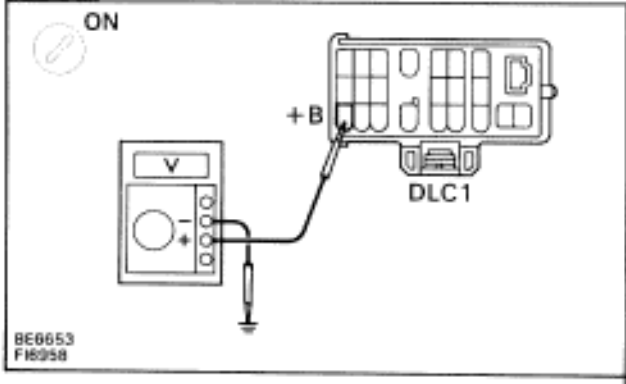

P Turn ignition switch ON.

C Measure voltage between terminal +B of data link connector 1 and body ground.

OK **Fuel pressure can be felt.**

OK

NG → **Check for ECM power source circuit (See page EG–465), and check for open in harness and connector between terminal +B of data link connector 1 and main relay.**

4 **Check for open and short in harness and connector between terminal FP of data link connector 1, fuel pump and body ground (see page IN–30).**

NG → Repair or replace harness or connector.

OK → Repair or replace fuel pump.

5 **Check voltage between terminals 3 (FPC) and 1 (E) of fuel pump ECU connector.**

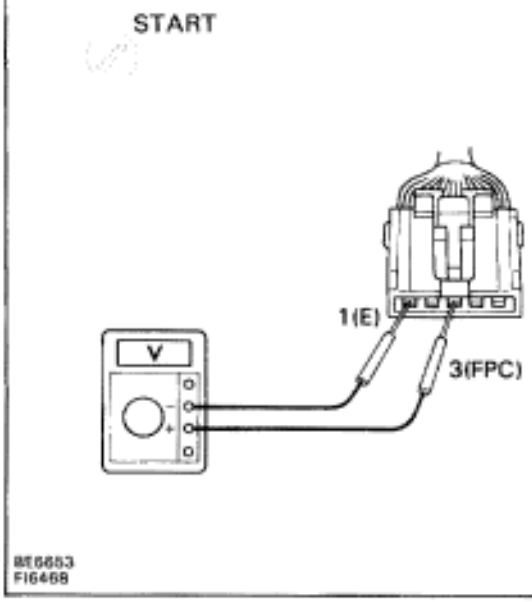

P (1) Remove the LH quarter trim panel. (See page EG–252)
(2) Disconnect fuel pump ECU connector.

C Measure voltage between terminals 3 (FPC) an 1 (E) of fuel pump ECU connector when ignition switch is turned to START.

OK **Voltage: 4.5 — 5.5 V**

NG → Replace fuel pump ECU.

OK → Replace fuel pump ECU.

6 **Check for open in harness and connector between terminal FPC of engine control module and terminal 3 (FPC) of fuel pump ECU, terminal 1 (E) of fuel pump ECU and body ground (See page IN–30).**

OK → Check and replace engine control module.

NG → Repair or replace harness or connector.

7 **Check for open and short in harness and connector between terminal DI of engine control module and terminal 2 (DI) of fuel pump ECU (See page IN–30).**

OK → Check and replace engine control module.

NG → Repair or replace harness or connector.

DTC 51 Switch Condition Signal Circuit

CIRCUIT DESCRIPTION

Park/Neutral Position Switch

The ECM uses the signals from the park/neutral position switch to determine whether the transmission is in park or neutral, or in some other position.

Air Conditioning Switch Signal

The ECM uses the output from the air conditioning switch to determine whether or not the air conditioning is operating so that it can increase the idling speed of the engine if necessary.

Throttle Position Sensor IDL Signal

The IDL contacts are mounted in the throttle position sensor, and detects the idle condition.

DTC No.	Diagnostic Trouble Code Detecting Condition	Trouble Area
51	(1) 3 sec. or more after engine starts with closed throttle position switch OFF (IDL1) (2) Park/neutral position switch: OFF (Shift position in "R", "D", "2" or "L" position.) (3) A/C switch ON	• Throttle position sensor IDL circuit • Accelerator pedal and cable • Park/neutral position switch • A/C switch circuit • ECM

HINT: In this circuit, diagnoses can only be made in the test mode.

WIRING DIAGRAM

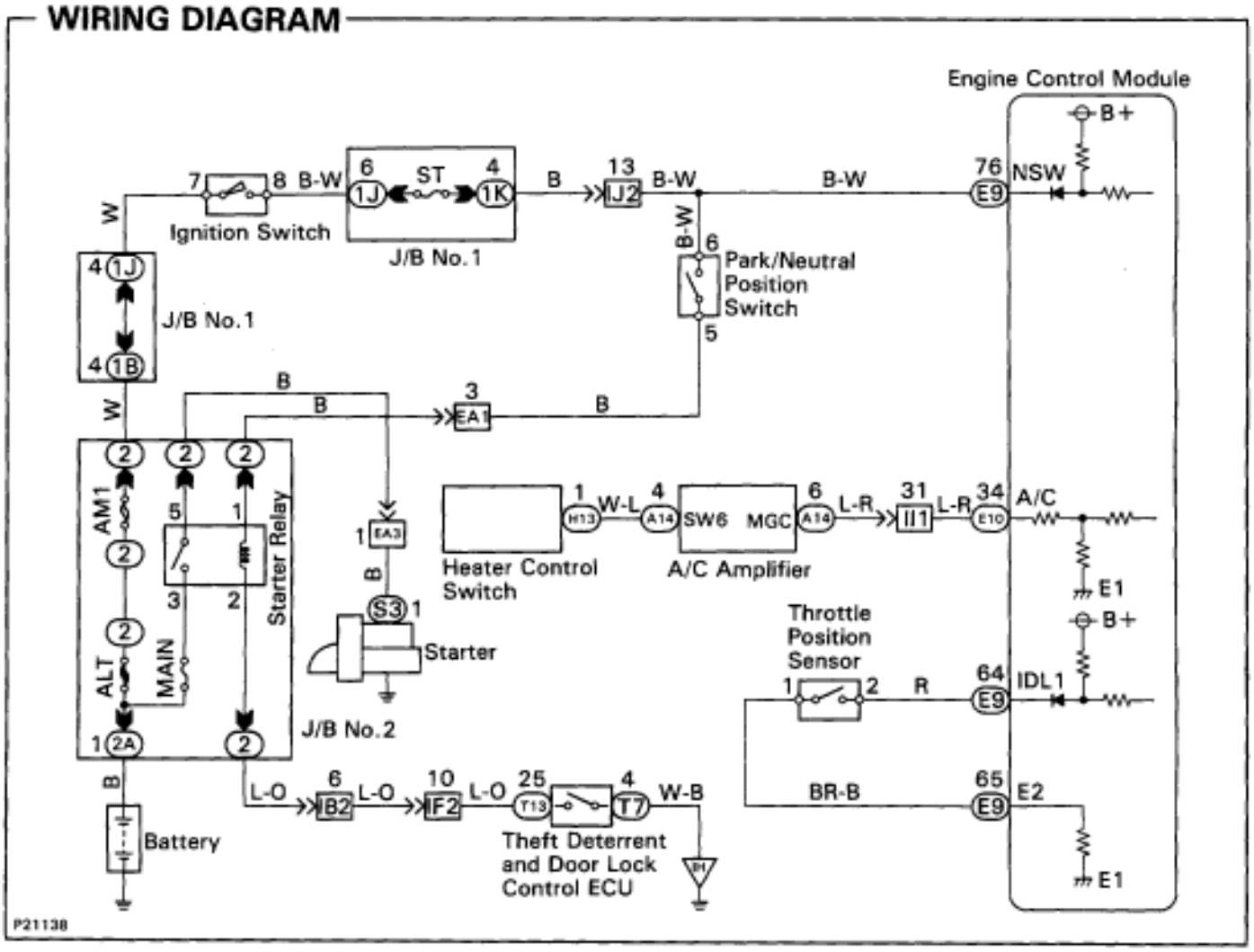

INSPECTION PROCEDURE

1 **Check output condition of diagnostic trouble code 51.**

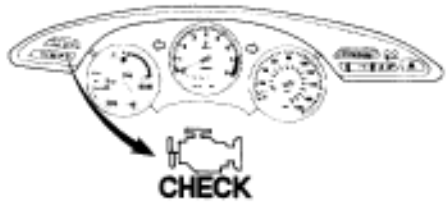

FI6814

P Setting the test mode.
(1) Turn ignition switch OFF.
(2) Connect terminals TE2 and E1 of DLC2.
(3) Turn ignition switch ON.
(For checking terminal IDL, disconnect the vacuum hose from the throttle body, then apply vacuum to the throttle opener (See page EG–219)).
(For checking terminal A/C, start the engine.)
(4) Connect terminals TE1 and E1 of DLC1 or DLC2.

C Check if code "51" is output by the malfunction indicator lamp.

OK

	Condition	Code
Park/Nuetral Position Switch (PNP)	P or N position	Normal*
	R,D, 2 or L position	51*
Throttle Position Sensor (IDL1)	Accelerator pedal released	Normal*
	Accelerator pedal depressed	51*
A/C Switch (A/C)	A/C SW ON	51
	A/C SW OFF	Normal

*: Before the STA signal is input (ST is not ON), diagnostic trouble code 43 is also output.

Hint Diagnostic trouble code 42 is output with vehicle speed 5 km/h (3 mph) or below.

OK

NG **IDL1...Go to step [2].**
PNP....Go to page EG–463.
A/C....Go to step [3].

Proceed to next circuit inspection shown on matrix chart (See page EG–408).

2 Check throttle position sensor.

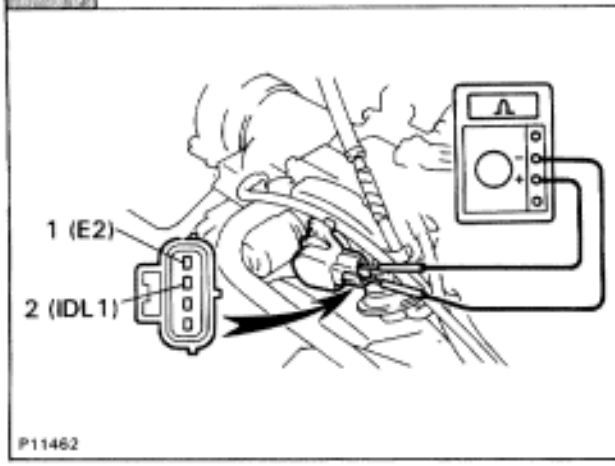

P
(1) Disconnect throttle position sensor connector.
(2) Disconnect the vacuum hose from the throttle body. than apply vacuum to the throttle opener (See page EG–219).

C
Measure resistance between terminals 2 (IDL1) and 1 (E2) of throttle position sensor connector.

OK

Throttle Valve	Resistance
Fully closed	Less than 0.5 kΩ
Opened	1 MΩ or higher

OK

NG → **Adjust or replace throttle position sensor. (See page EG–223)**

Check and repair harmless or connector between engine control module and throttle position sensor.

3 Check voltage between terminal A/C of engine control module connector and body ground.

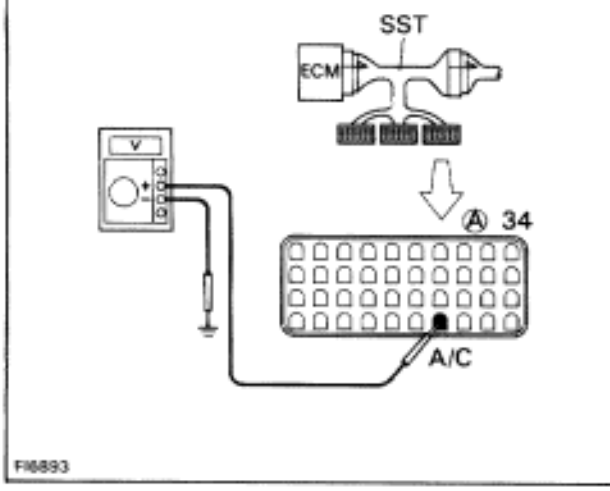

P
(1) Connect SST (check harness “A”). (See page EG–404)
SST 09990–01000
(2) Start the engine.

C
Measure voltage between terminal A/C of engine control module and body ground.

OK

A/C Switch	Voltage
OFF	7.5 – 14 V
ON	0 – 1.5 V

OK

NG → **Check A/C compressor circuit. (See page AC–62)**

Check and replace engine control module.

Park Neutral Position Switch Circuit

CIRCUIT DESCRIPTION

The park/neutral position switch goes on when the shift lever is in the N or P shift position. When it goes on the terminal NSW of the ECM is grounded to body ground via the starter relay and theft deterrent ECU, thus the terminal NSW voltage becomes 0 V. When the shift lever is in the D, 2, L or R position, the park/neutral position switch goes off, so the voltage of ECM terminal NSW becomes positive battery voltage, the voltage of the ECM internal power source.

If the shift lever is moved from the N position to the D position, this signal is used for air–fuel ratio correction and for idle speed control (estimated control), etc.

When the park/neutral position switch is off, code ”51” is output in the test mode diagnosis. (This is not abnormal.)

WIRING DIAGRAM

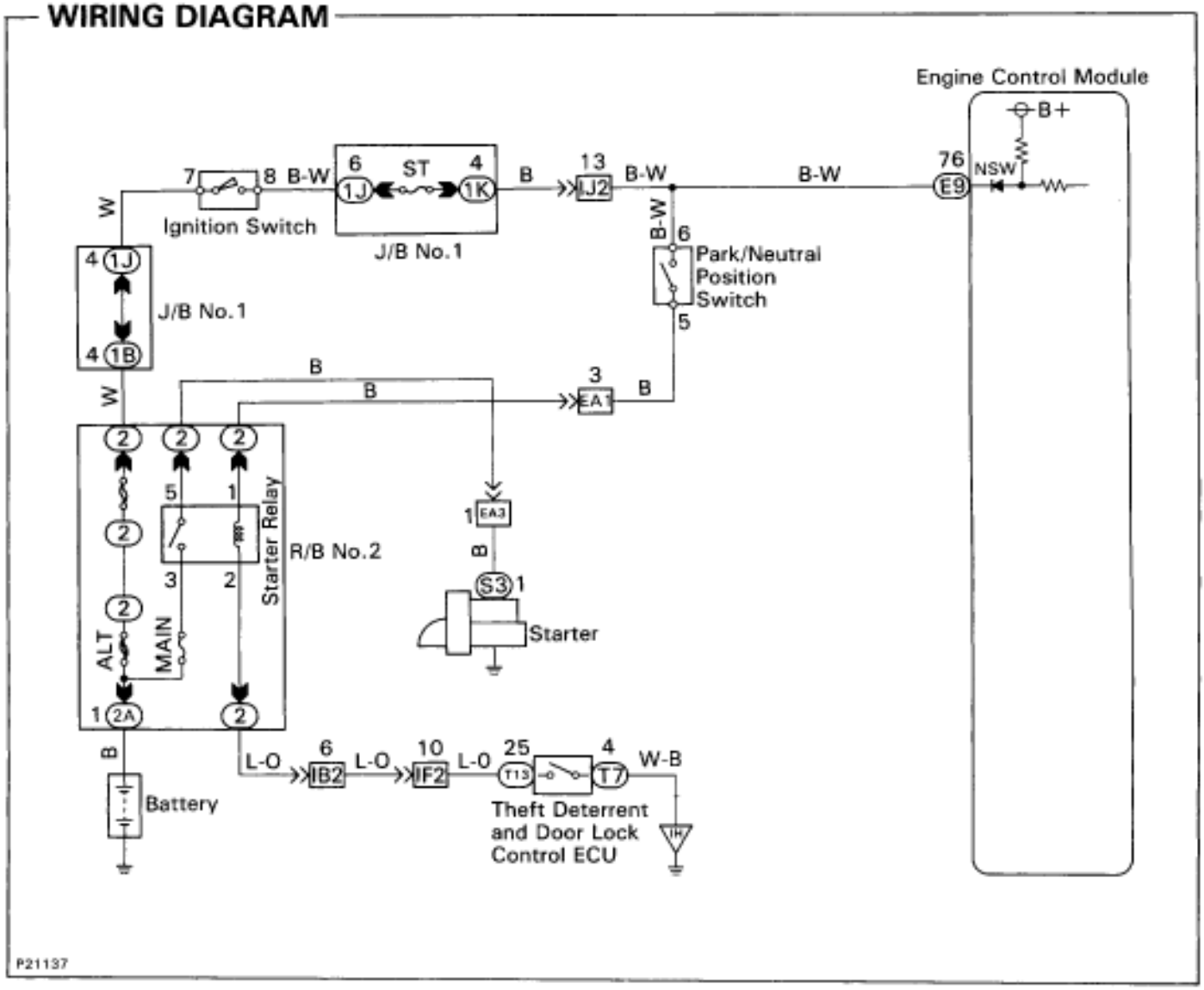

INSPECTION PROCEDURE

HINT: This diagnostic chart is based on the premise that the engine is being cranked under normal conditions. If the engine does not crank, proceed to the matrix chart of problem symptoms on page EG–408.

1 Check output condition of diagnostic trouble code 51

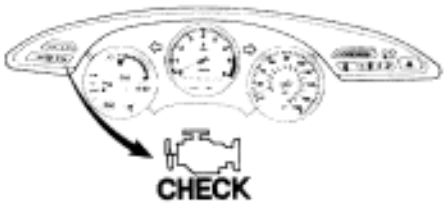

FI6914

P

(1) Connect terminals TE2 and E1 of DLC2.
(2) Turn ignition switch ON.
(3) Crank the engine.
(4) Connect terminals TE1 and E1 of DLC2.

C

Check if diagnostic trouble code "51" is output when the shift lever is in the P and D shift positions.

Result

Shift Position	Result		
	OK	NG Type I	NG Type II
""P"	Normal Code	Code 51	Normal Code
""D"	Code 51	Code 51	Normal Code

OK

NG Type I → **Go to step 2.**

NG Type II → **Go to step 3.**

Proceed to next circuit inspection shown on matrix chart (See page Eg–408).

2 Check for open in harness and connector between engine control module and park/neutral position switch (See page IN–30).

NG

OK → **Check and replace engine control module.**

Repair or replace harness or connector.

3 Check park/neutral position switch (See page AT1–81).

OK

NG → **Replace park/neutral position switch.**

Check and replace engine control module.

ECM Power Source Circuit

CIRCUIT DESCRIPTION

When the ignition switch is turned on, battery voltage is applied to the terminals IGSW of the ECM, and the main relay control circuit in the ECM sends a signal to the terminal M–REL of the ECM, switching on the main relay. This signal causes current to flow to the coil, closing the contacts of the main relay and supplying power to the terminal +B of the ECM.

If the ignition switch is turned off, the ECM continues to switch on the main relay for a maximum of 2 seconds for the initial setting of the IAC valve.

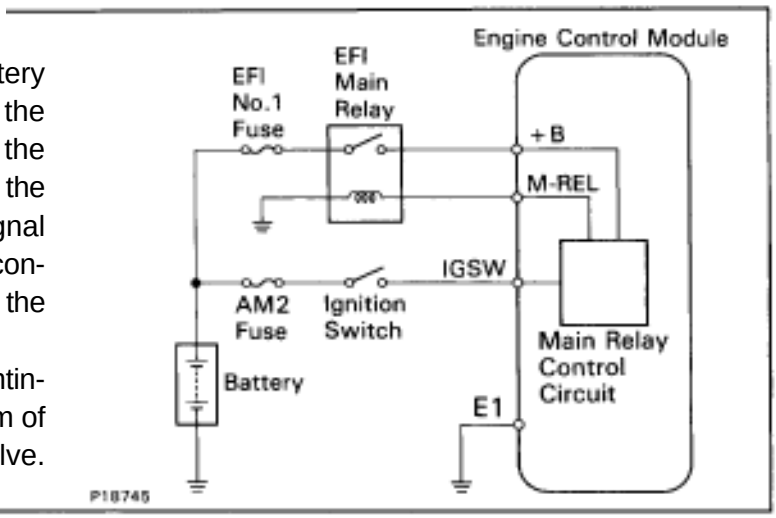

WIRING DIAGRAM

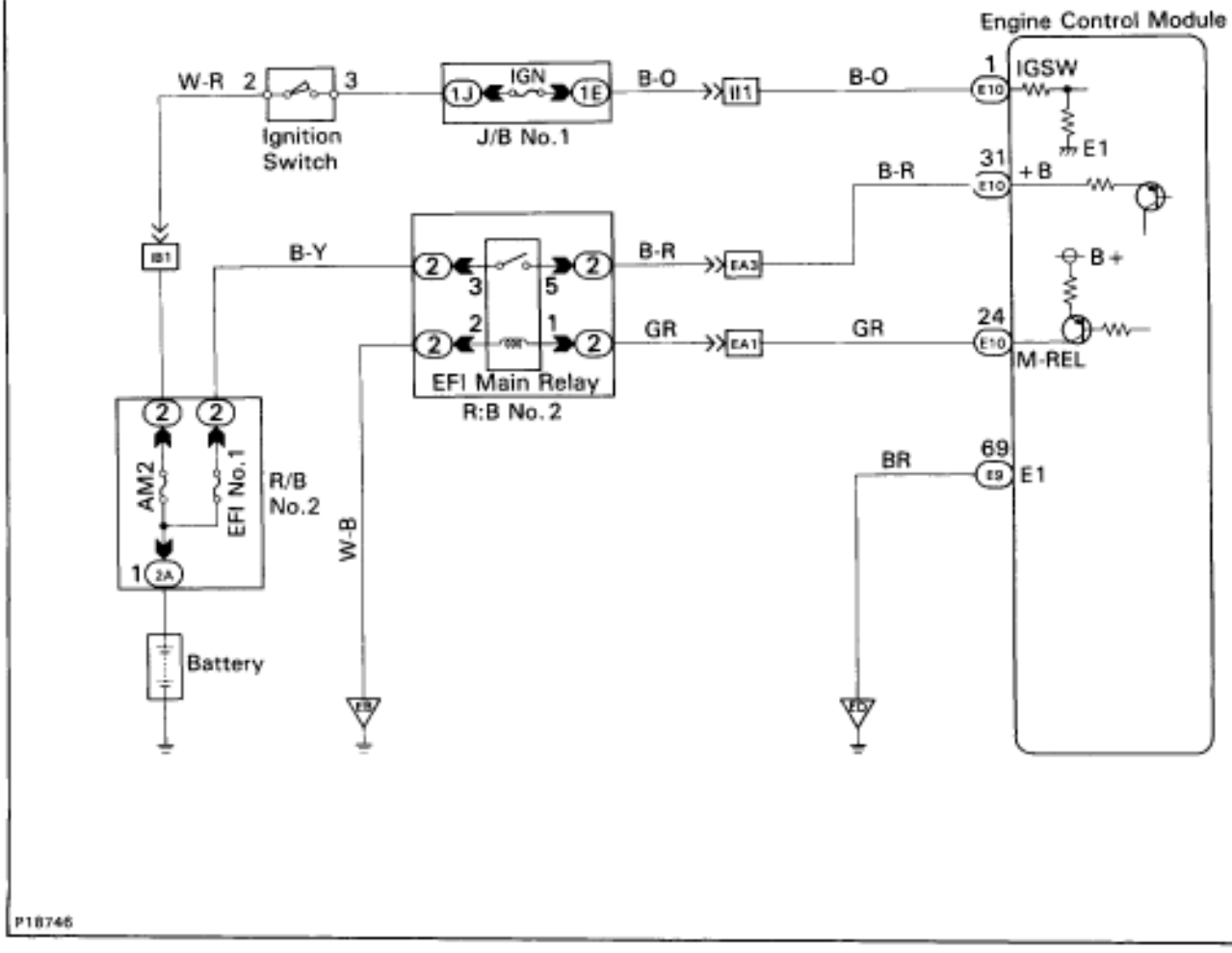

INSPECTION PROCEDURE

1 Check voltage between terminal +B and E1 of engine control module connector.

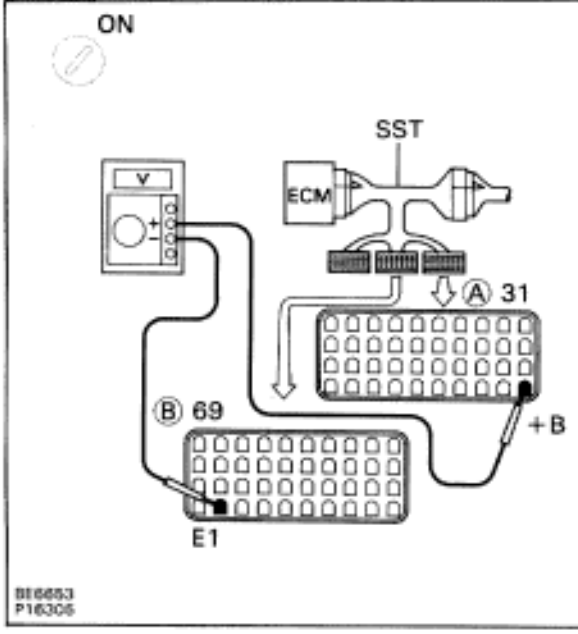

P (1) Connect SST (check harness “A”).
(See page Eg–404)
SST 09990–01000
(2) Turn ignition switch ON.

C Measure voltage between terminal +B and E1 of engine control module connector.

OK **Voltage: 9 — 14 V**

NG

OK → **Proceed to next circuit inspection shown on matrix chart (See page EG–408).**

2 Check for open in harness and connector between terminal E1 of engine control module and body ground (See page IN–30).

OK

NG → **Repair or replace harness or connector.**

3 Check voltage between terminal IGSV Check and replace engine control module connector and body ground.

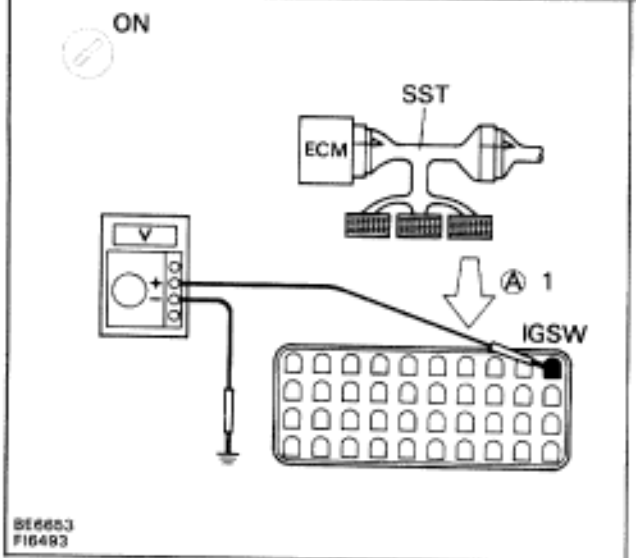

P Turn ignition switch ON.

C Measure voltage between terminal IGSW of engine control module connector and body ground.

OK **Voltage: 9 — 14 V**

NG

OK → Go to step 6.

4 Check IGN fuse.

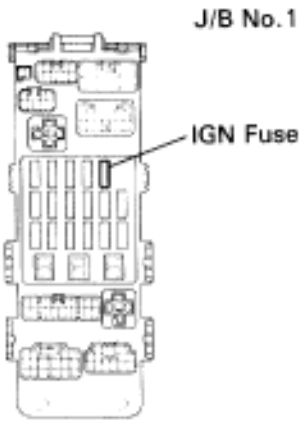

N08417

P Remove IGN fuse from J/B No.1.

C Check continuity of IGN fuse.

OK **Continuity**

OK

NG **Check for short in the harness and all the components connected to IGN fuse (See Electrical Wiring Diagram).**

5 Check ignition switch.

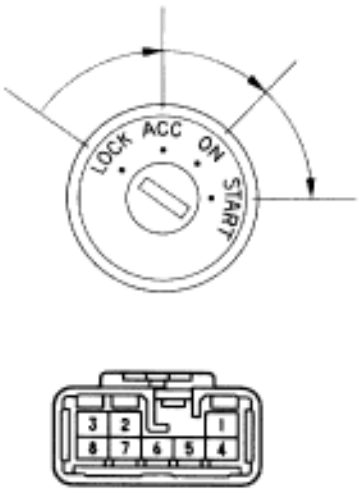

BE3582
g-8-2

P (1) Remove finish lower panel and finish lower panel LH.
(2) Remove heater to register duct No.2.

C Check continuity between terminals.

OK

○—○ continuity

Terminal / Switch position	1	2	3	4	5	7	8
LOCK							
ACC					○—○		
ON		○—○		○	○—○	○	
START	○	○—○	○	○		○—○	○

OK

NG **Replace ignition switch.**

Check and repair harness and connector between battery and ignition switch, ignition switch and engine control module.

6 **Check voltage between terminal M–REL of engine control module connector and body ground.**

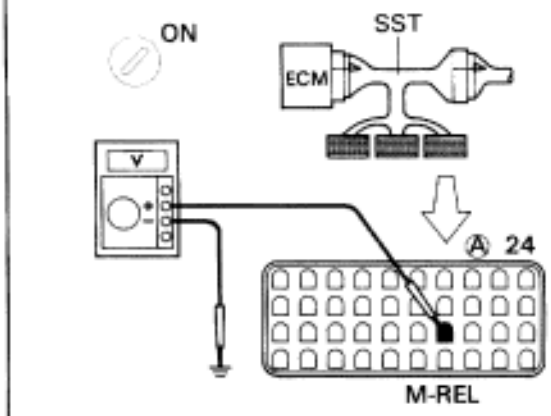

P Turn ignition switch ON.

C Measure voltage between terminal M–REL of engine control module connector and body ground.

OK **Voltage: 9 — 14 V**

OK

NG **Check and replace engine control module.**

7 **Check EFI No.1 Fuse.**

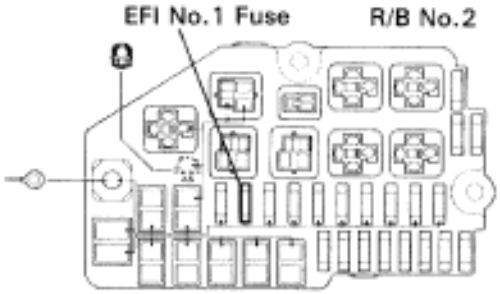

P Remove EFI No.1 fuse from R/B No.2.

C Check continuity of EFI No.1 fuse.

OK **Continuity**

OK

NG **Check for short in the harness and all the components connected to EFI No.1 fuse (See Electrical Wiring Diagram).**

8 Check EFI main relay.

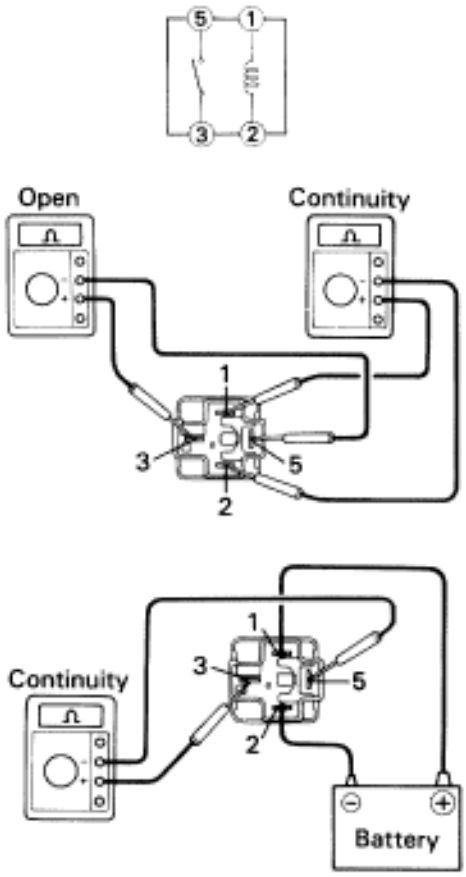

P Remove EFI main relay from R/B No.2.

C Check continuity between terminals of EFI main relay shown below.

OK

Terminals 3 and 5	Open
Terminals 1 and 2	Continuity (Reference value 72 Ω)

C (1) Apply battery voltage between terminals 1 and 2.
(2) Check continuity between terminals 3 and 5.

OK

Terminals 3 and 5	Continuity

OK

NG **Replace EFI main relay.**

9 Check for open and short in harness and connector between terminal M–REL of engine control module and body ground(See page IN–30).

OK

NG **Repair or replace harness or connector.**

Check and repair harness or connector between EFI No.1 fuse and battery.

Back Up Power Source Circuit

CIRCUIT DESCRIPTION

Battery positive voltage is supplied to terminal BATT of the ECM even when the ignition switch is off for use by the diagnostic trouble code memory and air–fuel ratio adaptive control value memory, etc.

WIRING DIAGRAM

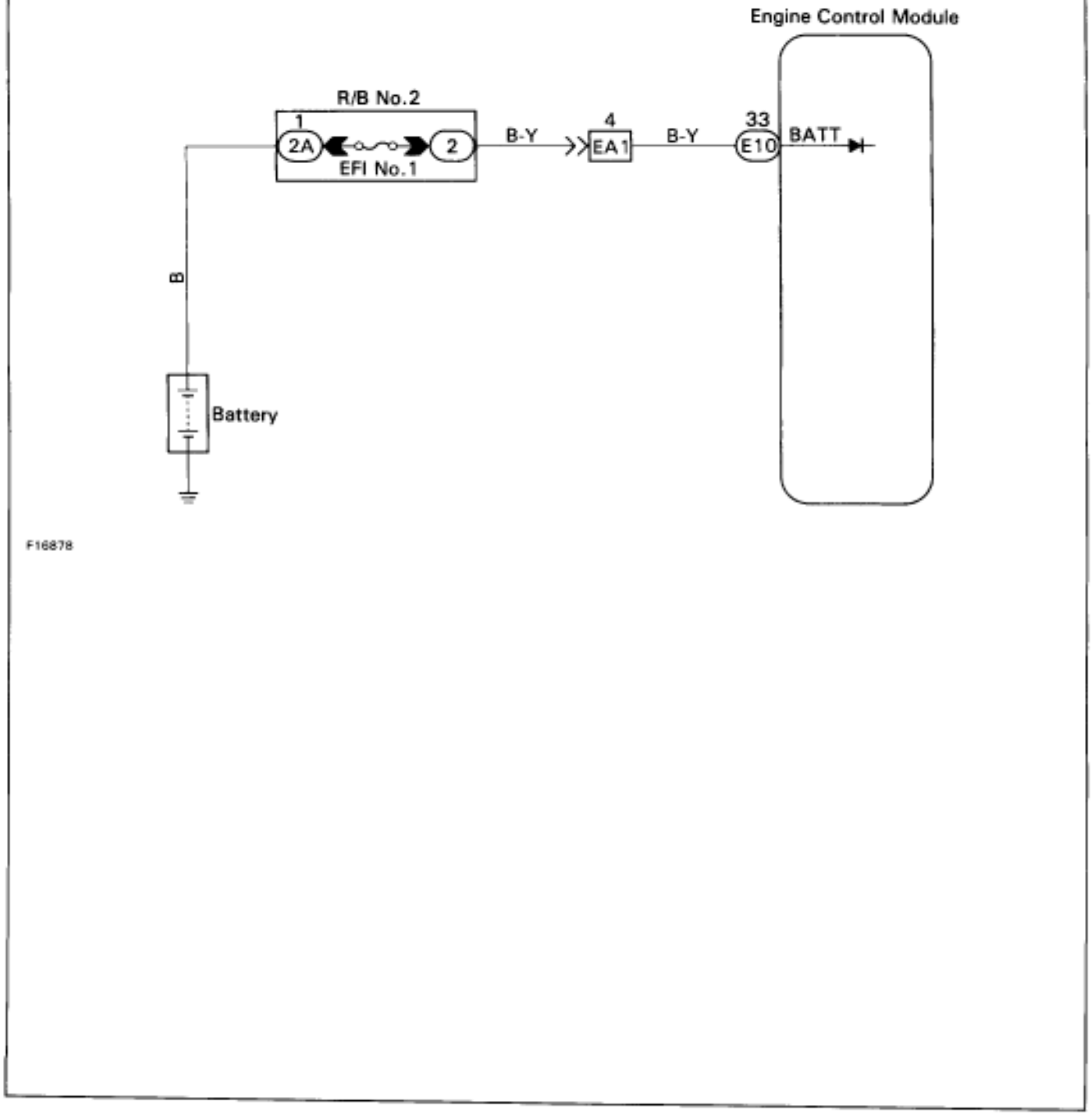

INSPECTION PROCEDURE

1 Check EFI No.1 Fuse.

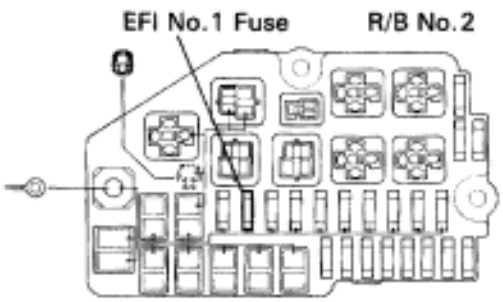

P Remove EFI No.1 fuse from R/B No.2.

C Check continuity of EFI No.1 fuse.

OK **Continuity**

OK

NG **Check for short in the harness and all the components connected to EFI No.1 fuse (See Electrical Wiring Diagram).**

2 Check voltage between terminal BATT of engine control module connector and body ground.

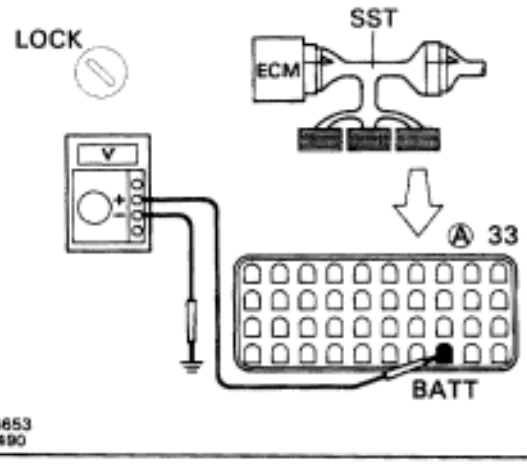

P Connect SST (check harness “A”).
(See page EG–404)
SST 09990–01000

C Measure voltage between terminal BATT of engine control module connector and body ground.

OK **Voltage: 9 — 14 V**

OK

NG **Check and repair harness or connector between engine control module and EFI No.1 fuse, EFI No.1 fuse and battery.**

3 Are the diagnostic trouble codes still in the memory when the ignition switch is turned OFF?

YES

NO **Check and replace engine control module.**

Proceed to next circuit inspection shown on matrix chart (See page EG–408).

Injector Circuit

CIRCUIT DESCRIPTION

The injectors are located in the intake manifold. They inject fuel into the cylinders based on the signals from the engine control module.

Reference **INSPECTION USING OSCILLOSCOPE**

- With the engine idling measure waveform between terminals #10 ~ 60 and E01 of engine control module.

HINT: The correct waveform is as shown.

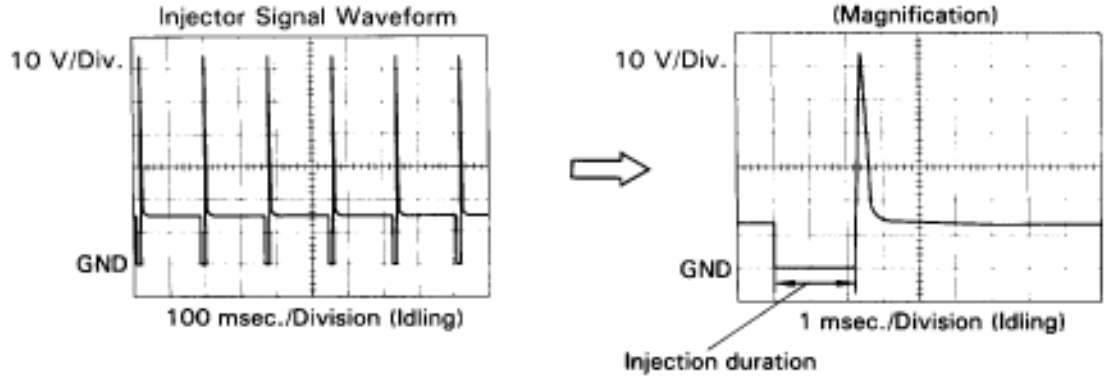

FI6588 FI6538

WIRING DIAGRAM

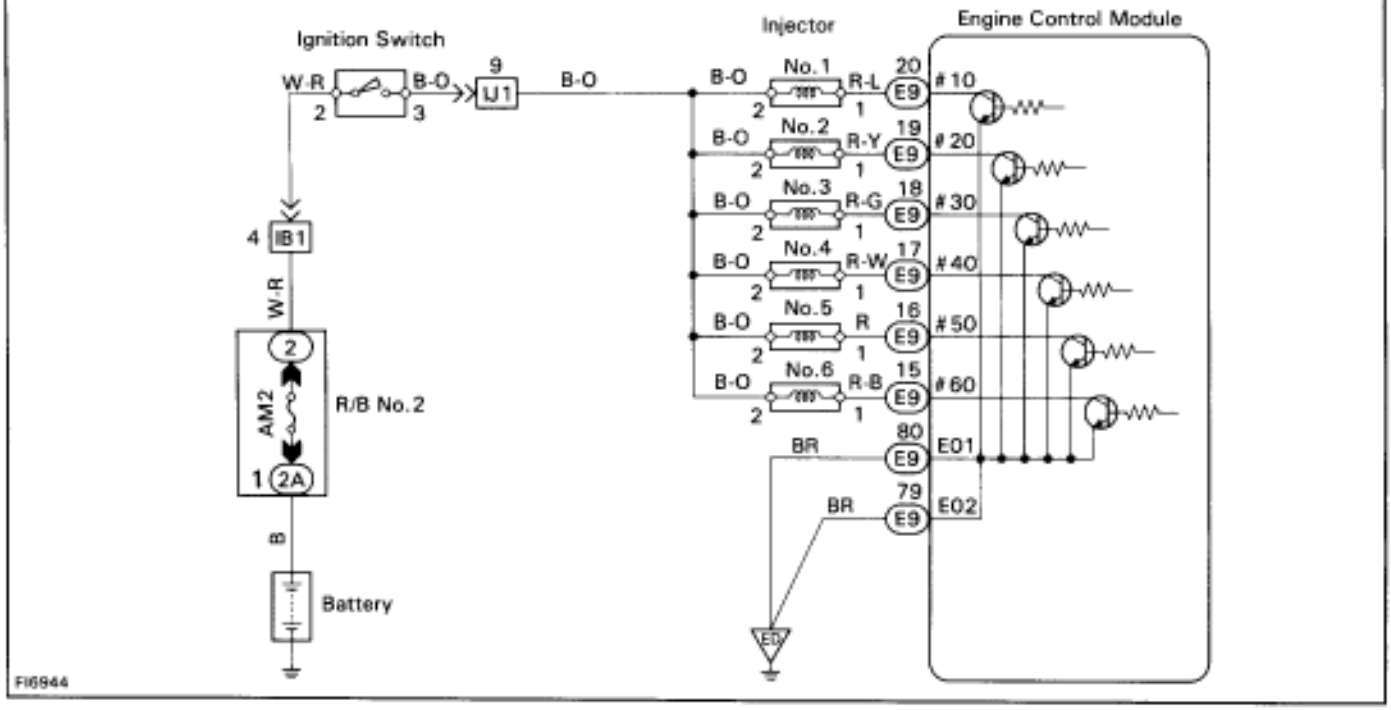

FI6944

INSPECTION PROCEDURE

1 **Check voltage between terminals # 10 ~ 60 of engine control module and body ground.**

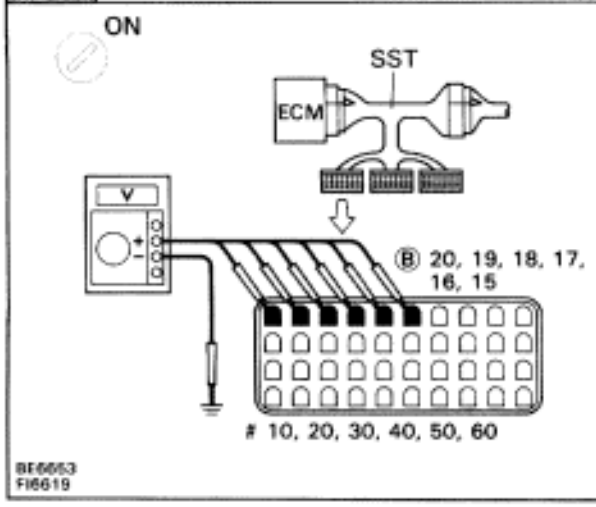

P (1) Connect SST check harness “A”).
(See page EG–404)
SST 09990–01000
(2) Turn ignition switch ON.

C Measure voltage between terminals #10 ~ 60 of engine control module and body ground.

OK **Voltage: 9 — 14 V**

NG

OK → **Go to step 3.**

2 **Check AM2 Fuse.**

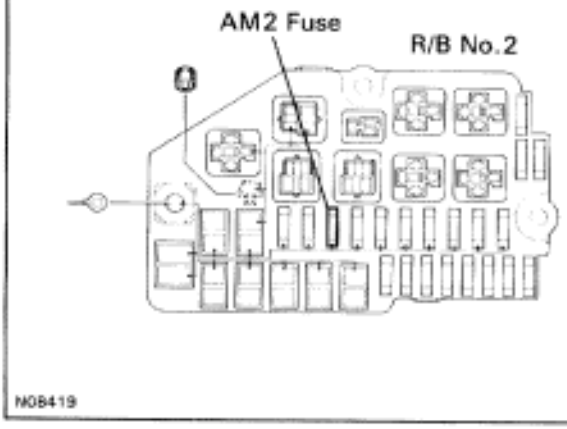

P Remove AM2 fuse from R/B No.2.

C Check continuity of AM2 fuse.

OK **Continuity**

OK

NG → **Check for short in the harness and all the components connected to AM2 fuse.**

Check and repair harness or connector between engine control module and battery.

3 **Check for open in harness and connector between terminal E)1, EO2 of ECM connector and body ground (See page IN–30).**

OK

NG → **Repair or replace harness or connector.**

4 **Check injectors.**

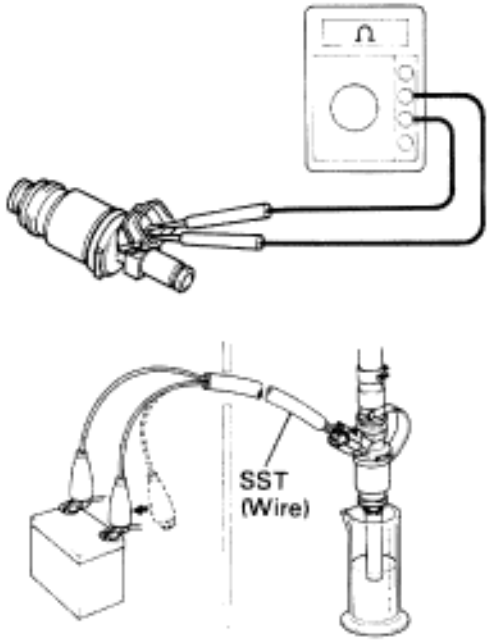

P Disconnect injector connector. (See page EG–202)

C Measure resistance of injector.

OK **Resistance: 13.4 — 14.2 Ω at 20°C (68°F)**

C Check injector volume of injector.
(See page EG–207)

OK
- **Injection volume**
  70 — 88 cc/15 sec.
  (4.3 — 5.4 cu in./15 sec.)
  Difference between each injector:
  Less than 9 cc (0.5 cu in.)
- **Leakage**
  Fuel drop: One drip or less per minute

OK

NG → **Replace injector.**

Check and replace engine control module.

IAC Valve Circuit

CIRCUIT DESCRIPTION

The IAC valve is situated on the intake chamber. Intake air bypassing the throttle valve is directed to the IAC valve through a passage.
A step motor is built into the IAC valve. It consists of 4 coils, a magnetic rotor, valve shaft and valve.
When current flows to the coils due to signals from the ECM, the rotor turns and moves the valve shaft forward or backward, changing the clearance between the valve and the valve seat.
In this way the intake air volume bypassing the throttle valve is regulated, controlling the engine speed.
There are 125 possible positions to which the valve can be opened.

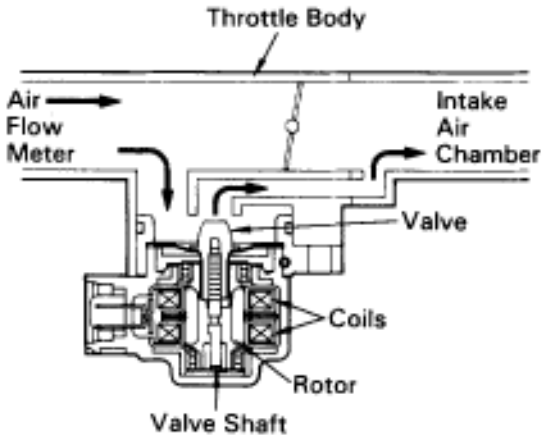

FI6611

Reference **INSPECTION USING OSCILLOSCOPE**

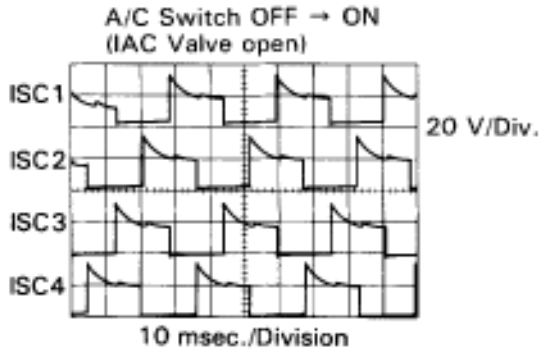

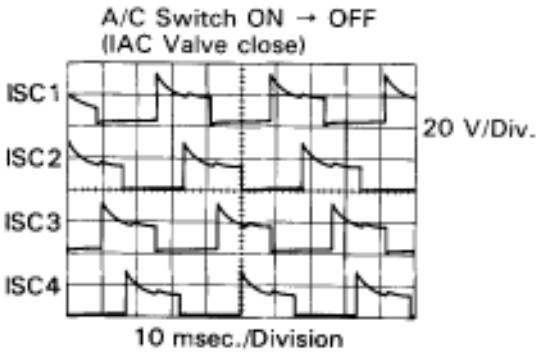

FI6536
FI6537

- With the engine idling measure wave forms between terminals ISC1, ISC2, ISC3, ISC4 and E01 of engine control module when A/C switch ON or OFF.

HINT:
The correct waveforms are as shown.

WIRING DIAGRAM

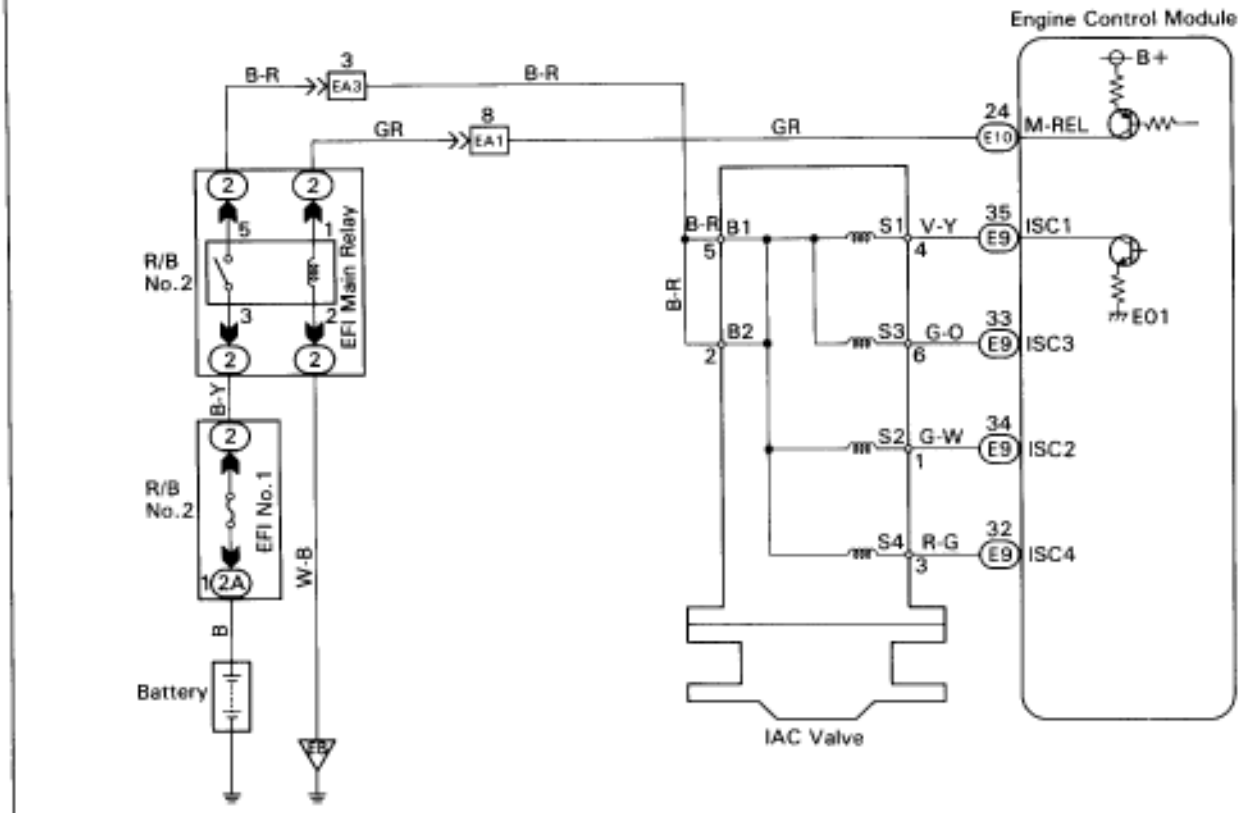

INSPECTION PROCEDURE

1 Check IAC valve.



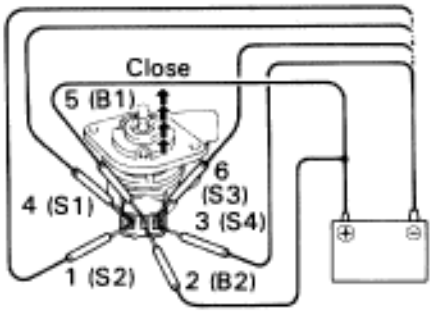

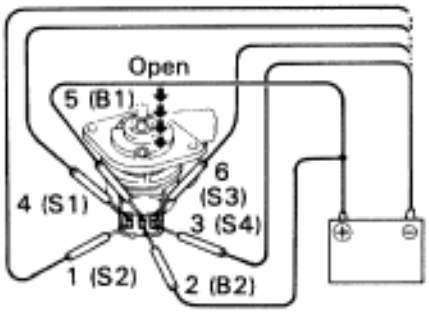

FI1694
P10701
P10700

P Disconnect IAC valve connector.

C Measure resistance between terminals shown below.

OK

Terminal	Resistance
5 (B1) – 4 (S1)	10 Ω – 30 Ω
5 (B1) – 6 (S3)	10 Ω – 30 Ω
2 (B2) – 1 (S2)	10 Ω – 30 Ω
2 (B2) – 3 (S4)	10 Ω – 30 Ω

P Remove IAC valve.

C
(1) Connect the battery positive lead to terminals 5 (B1) and 2 (B2), and the negative lead to terminals 4(S1)—1(S2)—6(S3)—3(S4) in that order.
(2) Connect the battery positive lead to terminals 5 (B1) and 2 (B2), and the negative lead to terminals 3(S4)—6(S3)—1(S2)—4(S1) in that order.

OK
(1) The valve moves in the closing direction.
(1) The valve moves in the opening direction.

OK →

NG → **Replace IAC valve.**

2 Check for open and short in harness and connector between EFI main relay and IAC valve, IAC valve and engine control module(See page IN–30).

OK →

NG → **Repair or replace harness or connector.**

Proceed to next circuit inspection shown on matrix chart (See page EG–408).

VSV Circuit for ACIS

CIRCUIT DESCRIPTION

The circuit opens and closes the IACV (Intake Air Control Valve) in response to the engine load in order to increase the intake efficiency (ACIS: Acoustic Control Induction System).
When the engine speed is 4,500 rpm or less and throttle valve opening angle is 30˚ or more, or engine speed is 4,500 rpm or more and throttle valve opening angle is 30˚ or less, the engine control module turns the VSV ON and closes the IACV. At all other times, the VSV is OFF, so the IACV is open.

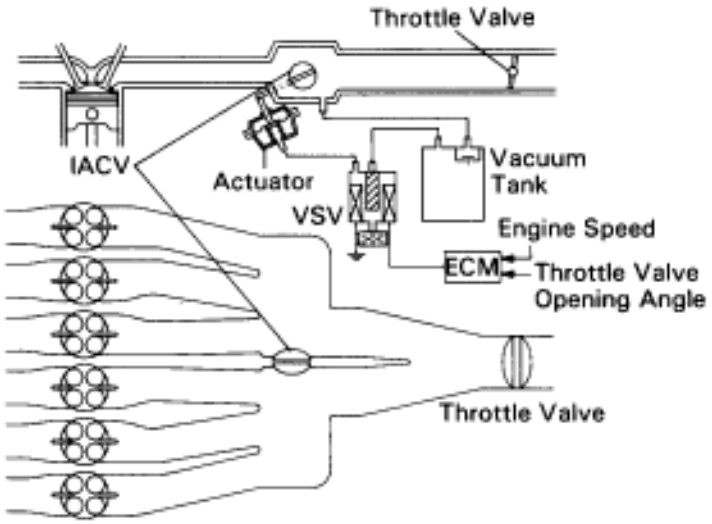

VSV	IACV
ON	closed
OFF	open

WIRING DIAGRAM

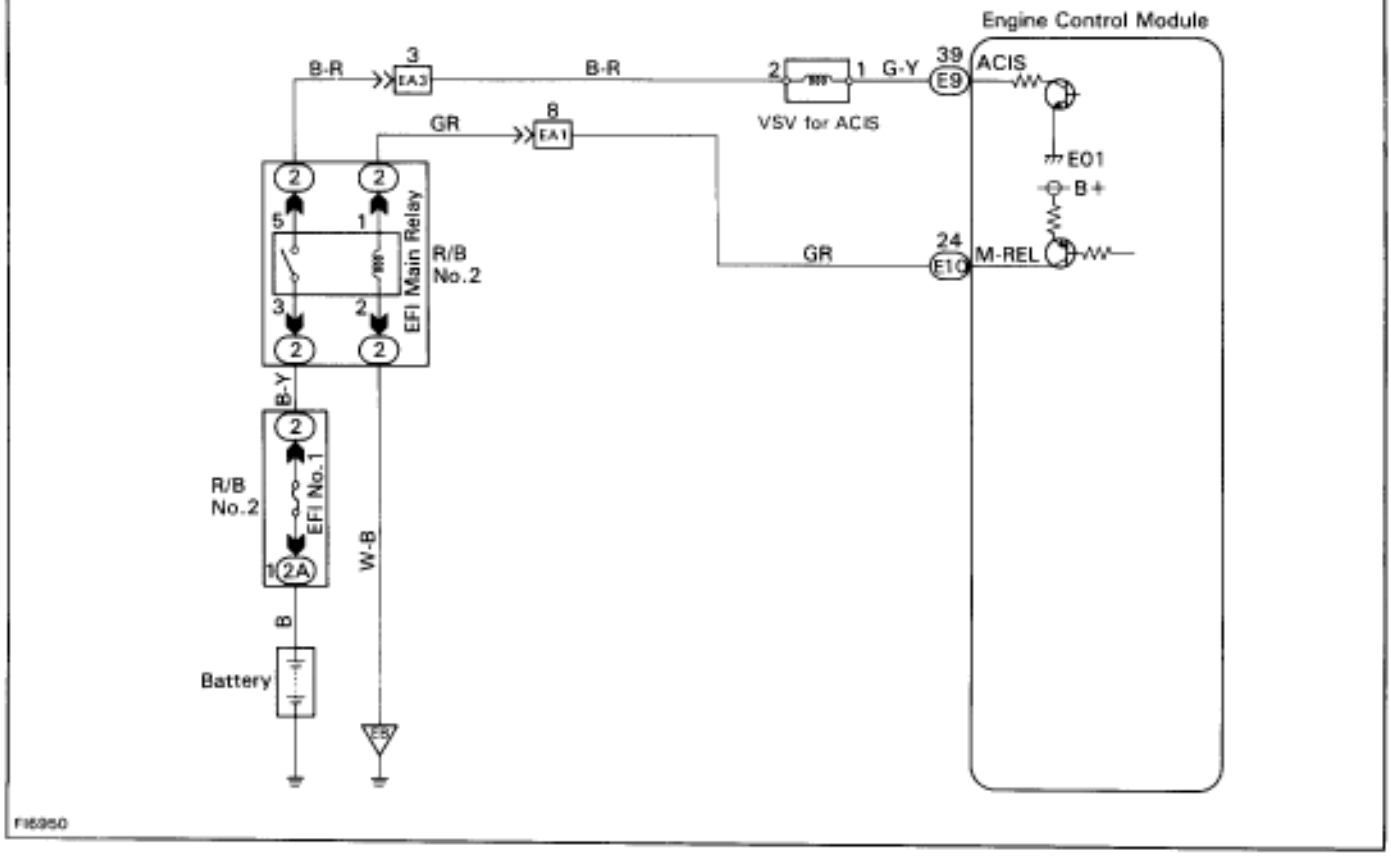

INSPECTION PROCEDURE

1 Check VSV for ACIS.

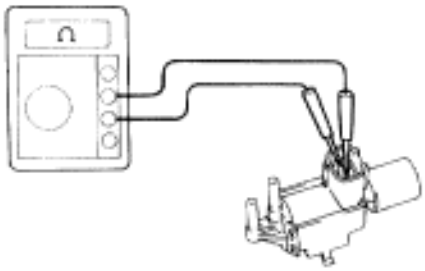

P (1) Remove VSV.
(2) Disconnect VSV connector.

C (1) Measure resistance between terminals.
(2) Measure resistance between each terminal and the body.

OK **(1) Resistance: 38.5 — 44.5 Ω at 20˚C (68˚F)**
(2) Resistance: 1 MΩ or higher

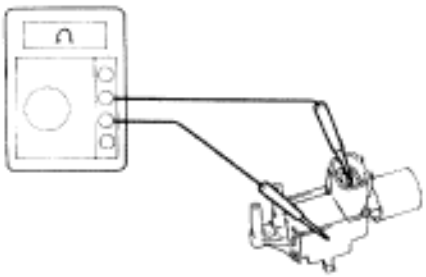

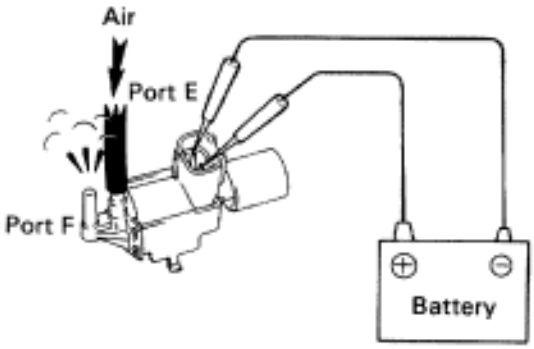

C Check operation of VSV when battery positive voltage is applied and released to the VSV terminals.

OK **Battery positive voltage is applied:**
Air from port E is flowing out through port F.

Battery positive voltage is not applied:
Air from port E is flowing out through the air filter.

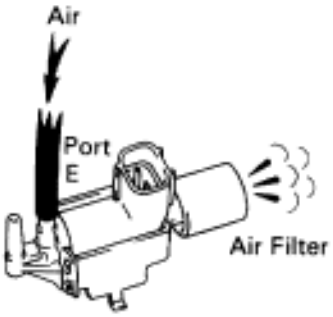

FI6645
FI6646
P02690
P02689

OK

NG **Replace VSV for ACIS.**

2 **Check voltage between terminal ACIS of engine control module connector and body ground.**

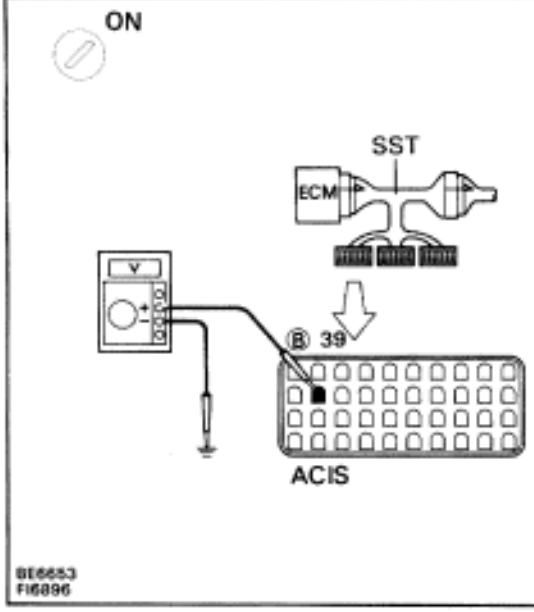

P (1) Connect SST (check harness “A”).
(See page EG–404)
SST 09990–01000
(2) Turn ignition switch ON.

C Measure voltage between terminal ACIS of engine control module connector and body ground.

OK **Voltage: 9 — 14 V**

NG

OK → **Check for vacuum tank. (See page EG–230)**

3 **Check for open and short in harness and connector between EFI main relay and engine control module (See page IN–30).**

OK

NG → **Repair or replace harness or connector.**

Check and replace engine control module.

VSV Circuit for Fuel Pressure Control (Only for California spec.)

CIRCUIT DESCRIPTION

The ECM turns on a VSV (Vacuum Switching Valve) to draw air into the diaphragm chamber of the pressure regulator if it detects that the temperature of the engine coolant is too high during engine starting.
The air drawn into the chamber increases the fuel pressure to prevent fuel vapor lock at high engine temperature in order to help the engine start when it is warm.
'Fuel pressure control ends approx. 120 sec. after then engine is started.

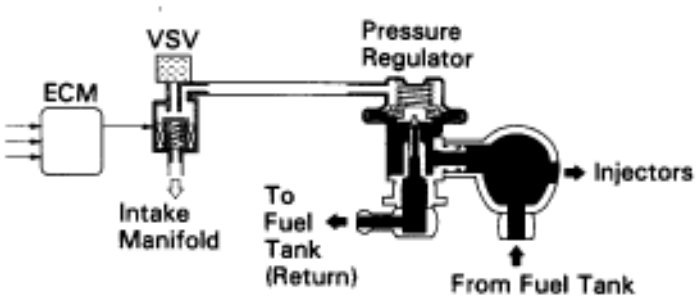

FI6897

WIRING DIAGRAM

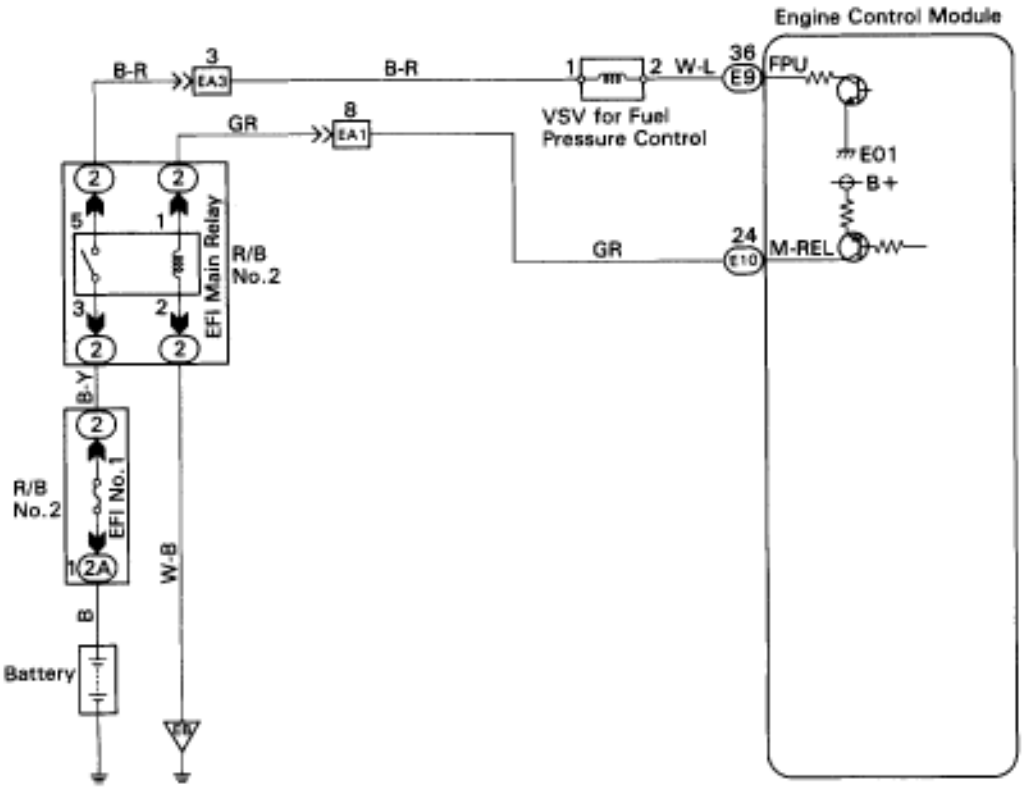

FI6950

INSPECTION PROCEDURE

1 Check VSV for fuel pressure control.

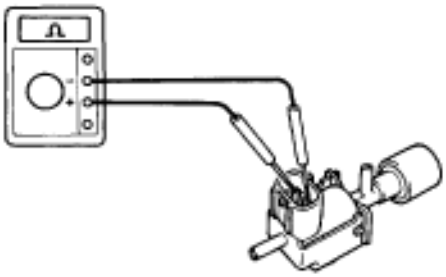

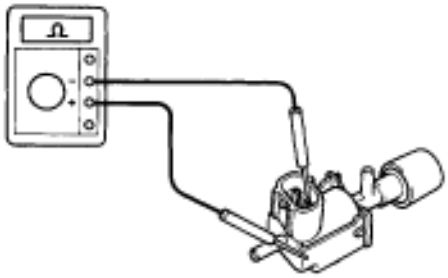

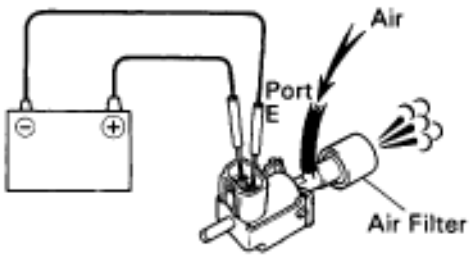

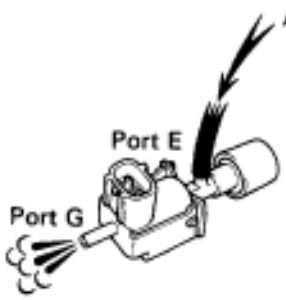

P10486
P10487
P10488
P10485

P
(1) Remove VSV.
(2) Disconnect VSV connector.

C
(1) Measure resistance between terminals.
(2) Measure resistance between each terminal and the body.

OK
(1) Resistance: 33 — 39 Ω at 20˚C (68˚F)
(2) Resistance: 1 MΩ or higher

C
Check operation of VSV when battery positive voltage is applied and released to the VSV terminals.

OK
Battery positive voltage is applied:
Air from port E is flowing out through the air filter.

Battery positive voltage is not applied:
Air from port E is flowing out through port G.

OK

NG **Replace VSV for fuel pressure control.**

2 **Check voltage between terminal FPU of engine control module connector and body ground.**

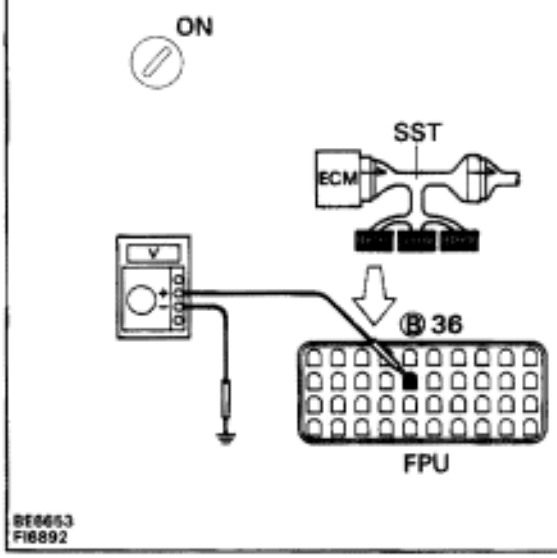

P (1) Connect SST (check harness “A”).
(See page EG–404)
SST 09990–01000
(2) Turn ignition switch ON.

C Measure voltage between terminal FPU of engine control module connector and body ground.

OK **Voltage: 9 — 14 V**

NG

OK → **Proceed to next circuit inspection shown on matrix chart (See page EG–408).**

3 **Check for open and short in harness and connector between engine control module and VSV, VSV and EFI main relay (See page IN–30).**

OK

NG → **Repair or replace harness or connector.**

Check and replace engine control module.

TE1 TE2 Terminal Circuit

CIRCUIT DESCRIPTION

Terminal TE1 is located in data link connectors 1 and 2. Terminal TE2 is located ONLY in data link connector 2.

The data link connector 1 is located in the engine compartment and the data link connector 2 is located in the cabin. When these terminals are connected with the E1 terminal, diagnostic trouble codes in normal mode or test mode can be read from the malfunction indicator lamp on the telltale light RH.

WIRING DIAGRAM

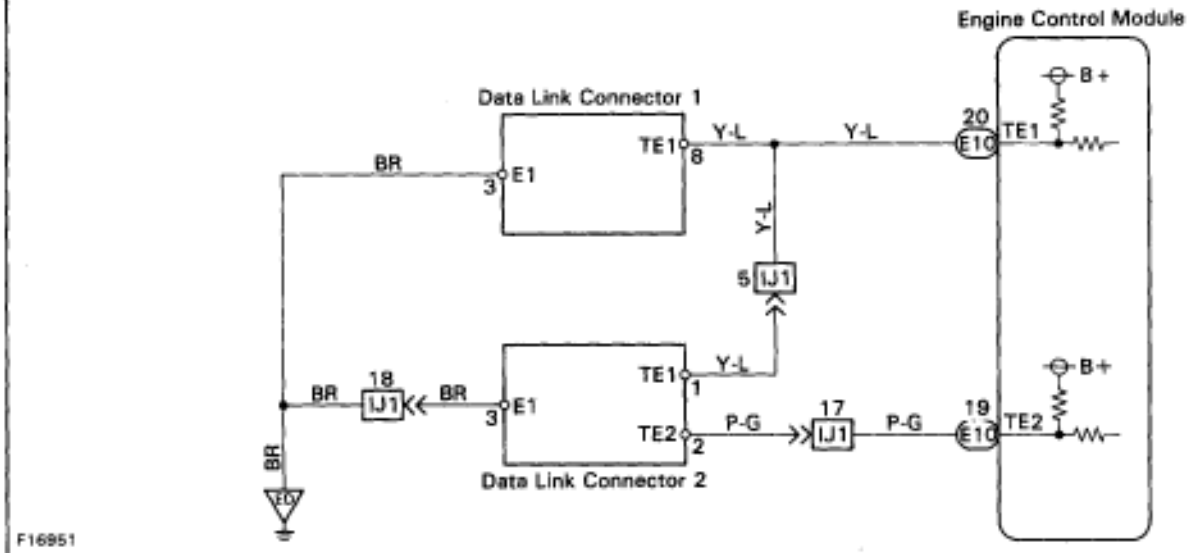

INSPECTION PROCEDURE

HINT: If terminals TE1 and TE2 are connected with terminal E1, diagnostic trouble code is not output or test mode is not activated.
Even though terminal TE1 is not connected with terminal E1, the malfunction indicator lamp blinks.
For the above phenomenon, the likely cause is an open or short in the wire harness, or malfunction inside the ECM.

1 Check voltage between terminals TE1, TE2 and E1 of data link connectors 1 and 2.

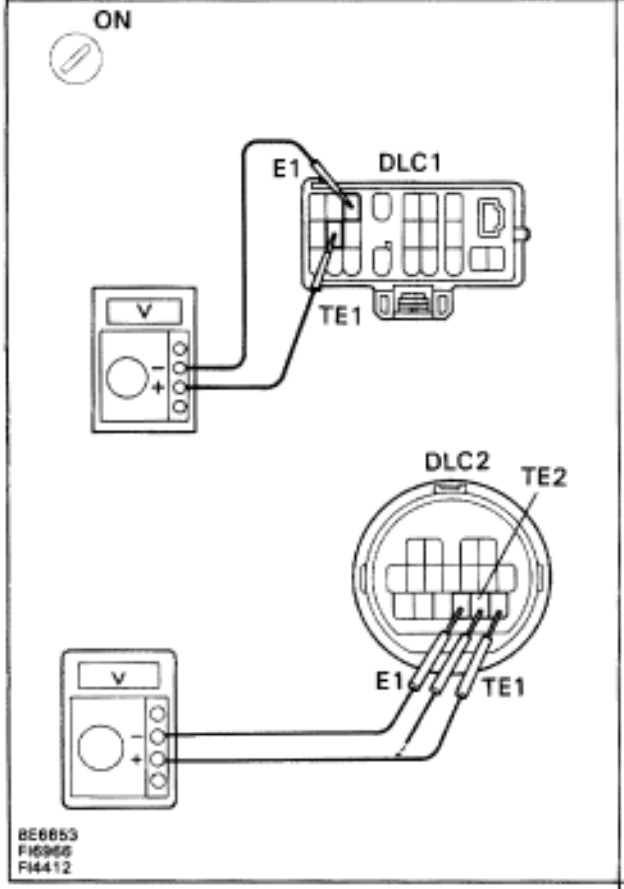

P Turn ignition switch ON.

C (1) For DLC1, measure voltage between terminal TE1 and E1.
(2) For DLC2, measure voltage between terminals TE1, TE2 nd E1.

OK **Voltage: 9 — 14 V**

NG

OK → **Check and replace engine control module.**

2 Check continuity between terminal E1 of data link connectors1, 2 and body ground.

OK

NG → **Repair or replace harness or connector.**

3 Check for open and short in harness and connector between engine control module and data link connectors1, 2 (See page IN–30).

OK

NG → **Repair or replace harness or connector.**

Check and replace engine control module.

2JZ–GTE ENGINE TROUBLESHOOTING

HOW TO PROCEED WITH TROUBLESHOOTING

Troubleshoot in accordance with the procedure on the following pages.

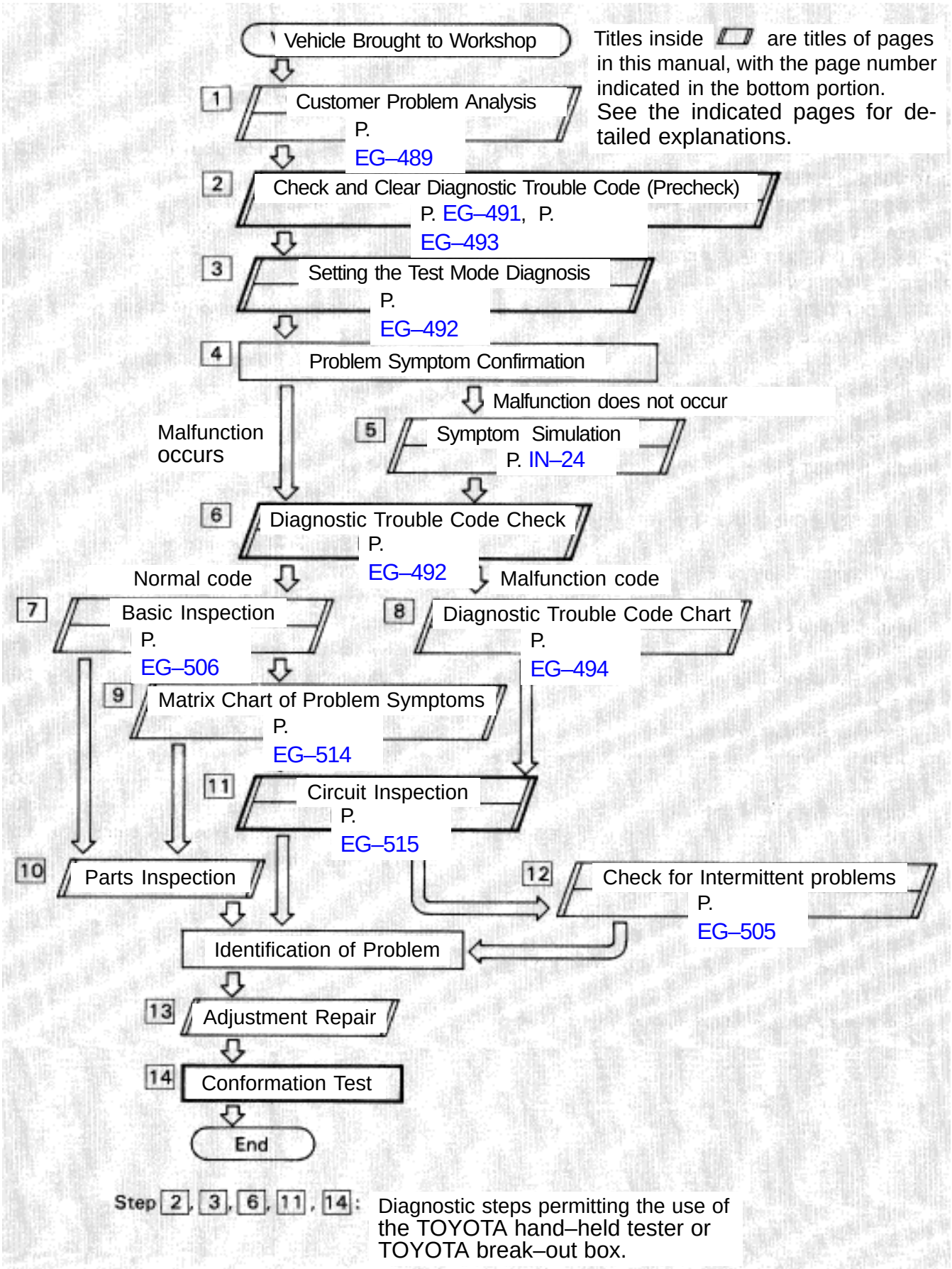

CUSTOMER PROBLEM ANALYSIS CHECK SHEET

ENGINE CONTROL System Check Sheet

Inspector's Name

Customer's Name		Registration No.	
		Registration Year	/ /
		Frame No.	
Date Vehicle Brought In		Odometer Reading	km Miles

Date Problem Occurred		
Frequency Problem Occurs		□ Constant □ Sometimes (times per day/month) □ Once only □ Other ( )
Conditions When Problem Occurres	Weather	□ Fine □ Cloudy □ Rainy □ Snowy □ Various/Other ( )
	Outdoor Temperature	□ Hot □ Warm □ Cool □ Cold (Approx. °F(°C))
	Place	□ Highway □ Suburbs □ Inner City □ Hill (□ Up, □ Down) □ Rough road □ Other ( )
	Engine Temp.	□ Cold □ Warming up □ After warming up □ Any temp. □ Other ( )
	Engine Operation	□ Starting □ Just after starting □ Idling □ Racing without load □ Driving (□ Constant speed □ Acceleration □ Deceleration □ Other ( ))

Problem Symptoms	□ Engine does not Start	□ Engine does not crank □ No initial combustion □ No complete combustion
	□ Difficult to Start	□ Engine cranks slowly □ Other ( )
	□ Poor Idling	□ Incorrect first idle □ Idling rpm is abnormal [□ High □ Low (rpm)] □ Rough idling □ Other ( )
	□ Poor Driveability	□ Hesitation □ Back fire □ Muffler explosion (after fire) □ Surging □ Knocking □ Other ( )
	□ Engine Stall	□ Engine stall soon after starting □ After accelerator pedal depressed □ After accelerator pedal released □ During A/C operation □ When N to D shift □ Other ( )
	□ Others	

Condition of Malfunction Indicator Lamp		□ Remains on □ Sometimes lights up □ Does not light up
Diagnostic Trouble Code Inspection	Normal Mode (Precheck)	□ Normal code □ Malfunction code [code]
	Test Mode	□ Normal code □ Malfunction code [code]



DIAGNOSIS SYSTEM DESCRIPTION

The ECM contains a built–in self–diagnosis system by which troubles with the engine signal network are detected and a Malfunction Indicator Lamp on the instrument panel lights up.

By analyzing various signals as shown in a later table (See page EG–494) the Engine Control Module (ECM) detects system malfunctions relating to the sensors or actuators.

In the normal mode, the self–diagnosis system monitors 19 items, indicated by code No. as shown in EG–494. A malfunction indicator lamp informs the driver that a malfunction has been detected. The lamp goes off automatically when the malfunction has been repaired, but the diagnostic trouble code(s) remains stored in the ECM memory (except for code Nos. 16 and 53). The ECM stores the code(s) until it is cleared by removing the EFI No. 1 fuse with the ignition switch OFF.

The diagnostic trouble code can be read by the number of blinks of the malfunction indicator lamp when TE1 and E1 terminals on the data link connector 1 or 2 are connected. When 2 or more codes are indicated, the lowest number (code) will appear first.

In the test mode, 13 items, indicated by code No. as shown in EG–494 are monitored. If a malfunction is detected in any one of the systems indicated by code Nos. 13, 21, 22, 24, 25, 26, 27, 35, 41, 47, 71 and 78 the ECM lights the malfunction indicator lamp to warn the technician that a malfunction has been detected. In this case, TE2 and E1 terminals on the data link connector 2 should be connected as shown later. (See page EG–492).

In the test mode, even if the malfunction is corrected, the malfunction code is stored in the ECM memory even when the ignition switch OFF (except code Nos. 43 and 51). The also applies in the normal mode. The diagnostic trouble mode (normal or test) and the output of the malfunction indicator lamp can be selected by connecting the TE1, TE2 and E1 terminals on the data link connector 2, as shown later.

A test mode function has been added to the functions of the self–diagnosis system of the normal mode for the purpose of detecting malfunctions such as poor contact, which are difficult to detect in the normal mode. This function fills up the self–diagnosis system. The test mode can be implemented by the technician following the appropriate procedures of check terminal connection and operation described later. (See page EG–492)

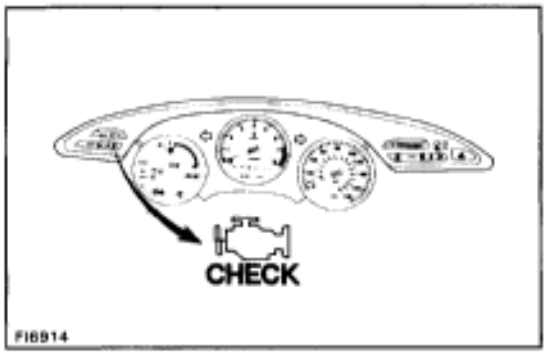

Diagnosis Inspection (Normal Mode)

MALFUNCTION INDICATOR LAMP CHECK

1. The Malfunction Indicator Lamp will come on when the ignition switch is turned ON and the engine is not running.
   HINT: If the malfunction indicator lamp does not light up, proceed to troubleshooting of the telltale light RH (See page BE–48).

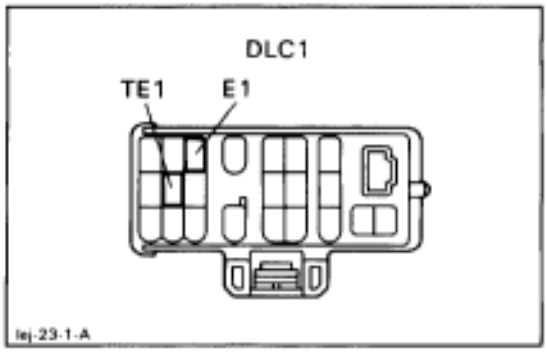

2. When the engine is started, the malfunction indicator lamp should go off.
   If the light remains on, the diagnosis system has detected a malfunction or abnormality in the system.

DIAGNOSTIC TROUBLE CODE CHECK

1. Turn ignition switch ON.
2. Using SST, connect terminals between TE1 and E1 of data link connector 1 or 2.
   SST 09843–18020

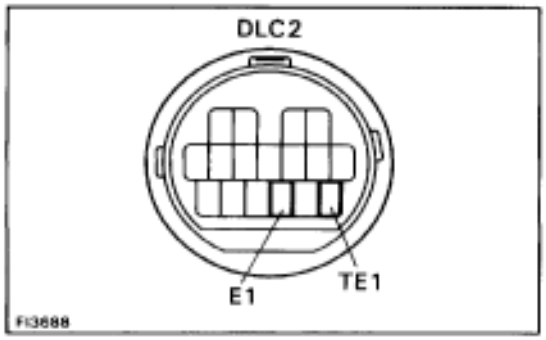

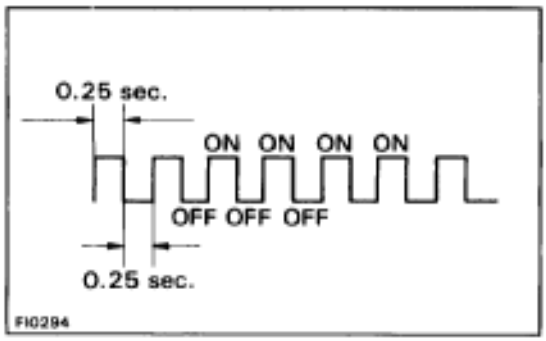

3. Read the diagnostic trouble code from malfunction indicator lamp.
   HINT: If a diagnostic trouble code is not output, check the TE1 terminal circuit (See page EG–598).

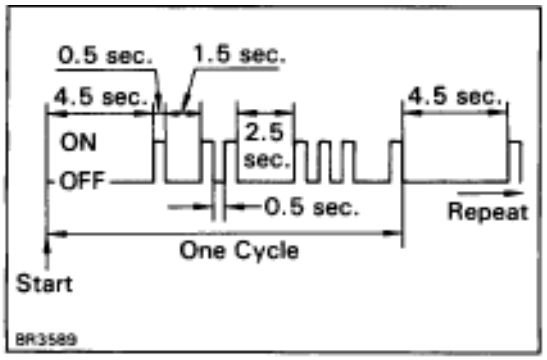

   As an example, the blinking patterns for codes; normal, 12 and 31 are as shown on the illustration.
4. Check the details of the malfunction using the diagnostic trouble code table on page EG–494.
5. After completing the check, disconnect terminals TE1 and E1, and turn off the display.
   HINT: In the event of 2 or more malfunction codes, indication will begin from the smaller numbered code and continue in order to the larger.

Diagnosis Inspection (Test Mode)

Compared to the normal mode, the test mode has an increased sensing ability to detect malfunctions.

It can also detect malfunctions in the starter signal circuit, the IDL contact signal of the throttle position sensor, air conditioning signal and park/neutral position switch signal.

Furthermore, the same diagnostic items which are detected in the normal mode can also be detected in the test mode.

DIAGNOSTIC TROUBLE CODE CHECK

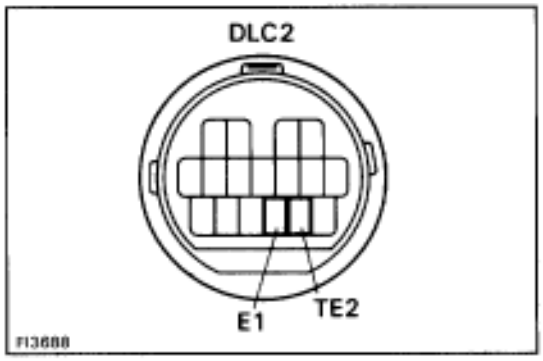

1. Initial conditions.
   (a) Battery voltage 11 V or more
   (b) Throttle valve fully closed
   (c) Transmission in neutral position
   (d) Air conditioning switched OFF
2. Turn ignition switch OFF
3. Using SST, connect terminals TE2 and E1 of the data link connector 2.
   SST 09843–18020

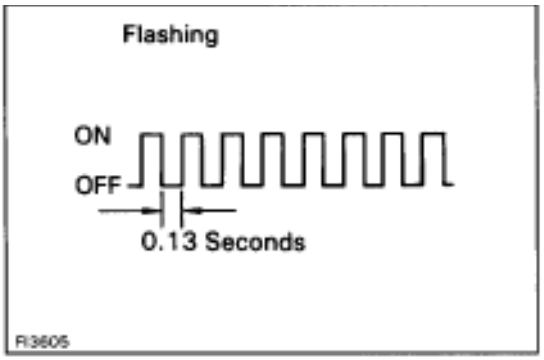

4. Turn ignition switch ON.
   HINT:
   - To confirm that the test mode is operating, check that the malfunction indicator lamp flashes when the ignition switch is turned to ON.
   - If the malfunction indicator lamp does not flash, proceed to troubleshooting of the TE2 terminal circuit on page EG–598.
5. Start the engine.
6. Simulate the conditions of the malfunction described by the customer.
7. After the road test, using SST, connect terminals TE1 and E1 of the data link connector 2.
   SST 09843–18020

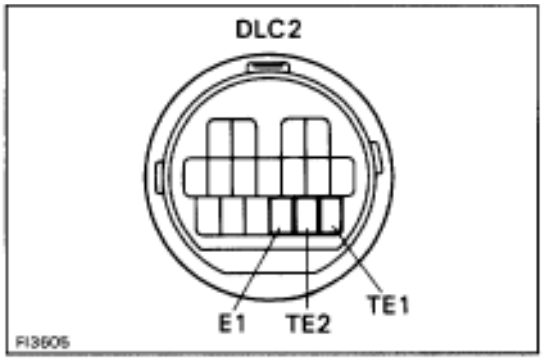

8. Read the diagnostic trouble code on malfunction indicator lamp on the telltale light RH (See page EG–491).
9. After completing the check, disconnect terminals TE1, TE2 and E1, and turn off the display.
   HINT:
   - The test mode will not start if terminals TE2 and E1 are connected after the ignition switch is turned ON.
   - When the engine is not cranked, diagnostic trouble codes ”43” (Starter signal) output, but this is not abnormal.
   - When the automatic transmission shift lever is in the ”D”, ”2”, ”L” or ”R” shift position, or when the air conditioning is on or when the accelerator pedal is depressed, code ”51” (Switch condition signal) is output, but this is not abnormal.

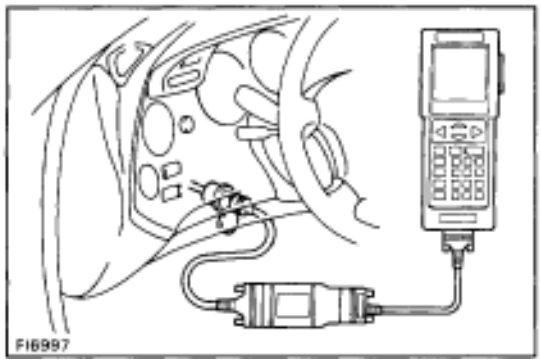

DIAGNOSTIC TROUBLE CODE CHECK USING TOYOTA HAND–HELD TESTER

1. Hook up the TOYOTA hand–held tester to the DLC2.
2. Read the diagnostic trouble codes by following the prompts on the tester screen.

Please refer to the TOYOTA hand–held tester operation's manual for further details.

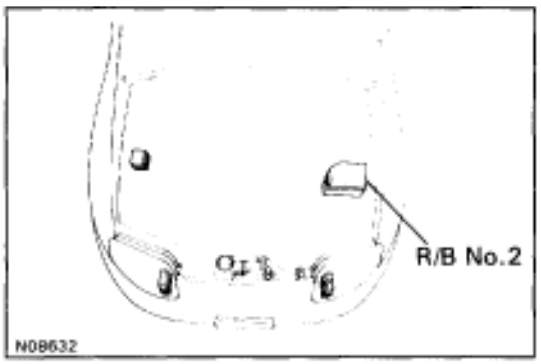

DIAGNOSTIC TROUBLE CODE CLEARANCE

1. After repair of the trouble areas, the diagnostic trouble code retained in the ECM memory must be cleared out by removing the EFI No.1 fuse (30A) from R/B No.2 for 10 seconds or more, with the ignition switch OFF.
   HINT:
   - Cancellation can also be done by removing the negative (–) terminal cable from the battery, but in this case, other memory systems (clock, etc.) will also be cancelled out.
   - If it is necessary to work on engine components requiring removal of the negative (–) terminal cable from the battery, a check must first be made to see if a diagnostic trouble code has been recorded.
2. After cancellation, road test the vehicle to check that a normal code is now read on the malfunction indicator lamp.
   If the same diagnostic trouble code appears, it indicates that the trouble area has not been repaired thoroughly.

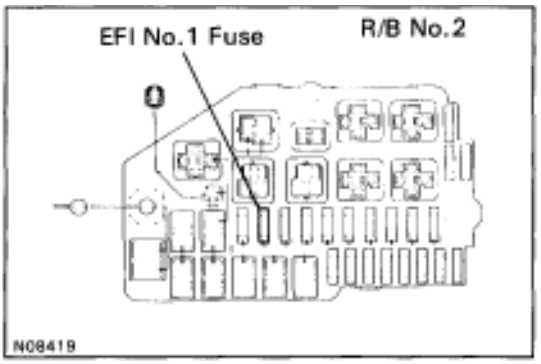

ECM DATA MONITOR USING TOYOTA HAND–HELD TESTER

1. Hook up the TOYOTA hand–held tester to the DLC2.
2. Monitor the ECM data by following the prompts on the tester screen.

HINT: TOYOTA hand–held tester has a "Snapshot" function which records the monitored data.
Please refer to TOYOTA hand–held tester operator's manual for further details.

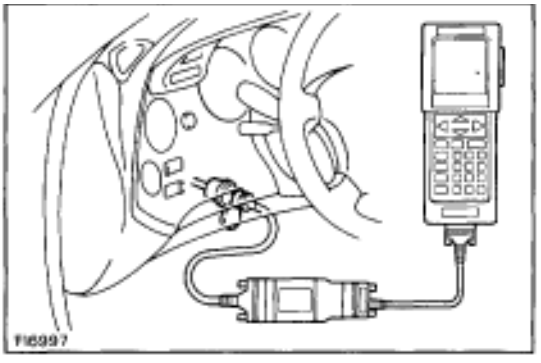

ECM TERMINAL VALUES MEASUREMENT USING TOYOTA BREAK–OUT–BOX AND TOYOTA HAND–HELD TESTER

1. Hook up the TOYOTA break–out–box and TOYOTA handheld tester to the vehicle.
2. Read the ECM input/output values by following the prompts on the tester screen.

HINT: TOYOTA hand–held tester has a "Snapshot" function. This records the measured values and is effective in the diagnosis of intermittent problems.
Please refer to TOYOTA hand–held tester/TOYOTA break–out–box operator's manual for further details.

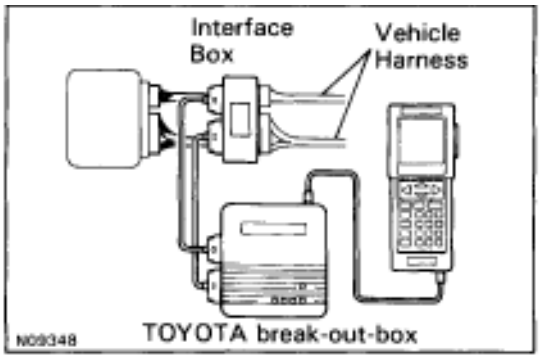

DIAGNOSTIC TROUBLE CODE CHART

HINT: Parameters listed in the chart may not be exactly the same as your reading due to type of the instruments or other factors.

DTC No.	Number of MIL Blinks	Circuit	Diagnostic Trouble Code Detecting Condition
–	 8E3931	Normal	No code is recorded
12	 8E3931	G, NE Signal (No.1)	No “NE” or “G1” and “G2” signal to ECM for 2 sec. or more after cranking
13	 8E3931	G, NE Signal (No.2)	No NE signal to ECM for 0.1 sec. or more at 1,000 rpm or more
			NE signal does not pulse 12 times to ECM during the interval between G1 and G2 pulses
			Deviation in G (G1, G2) and NE signal continues for 3 sec. during idling (throttle fully closed) after engine warmed up
14	 8E3931	Ignition Signal	No IGF signal to ECM for 4~7 consecutive IGT signals with engine speed less than 3,000 rpm
16	 8E3931	A/T Control Signal	Fault in communications between the engine CPU and A/T CPU in the ECM

If a malfunction code is displayed during the diagnostic trouble code check in test mode, check the circuit for that code listed in the table below (Proceed to the page given for that circuit).

Trouble Area	Malfunction Indicator Lamp*1		Memory*2	See page
	Normal Mode	Test Mode		
–	–	–	–	–
• Open or short in crankshaft position sensor, camshaft position sensor No.1, No.2 circuit • Crankshaft position sensor • Camshaft position sensor No.1, No.2 • Starter • ECM	ON	N.A.	◯	EG–515
• Open or short in crankshaft position sensor circuit • Crankshaft position sensor • ECM	ON	N.A.		
• Open or short in crankshaft position sensor circuit • Mechanical system malfunction (skipping teeth of timing belt, belt stretched) • Crankshaft position sensor • ECM	N.A.	ON	◯	EG–518
• Mechanical system malfunction (skipping teeth of timing belt, belt stretched) • Camshaft position sensor No.1, No.2 • ECM	ON	N.A.		
• Open or short in IGF circuit from igniter to ECM • Igniter • ECM	ON	N.A.	◯	EG–519
• ECM	ON	N.A.	X	EG–524

*1, 2: See page EG–502.

DTC No.	Number of MIL Blinks	Circuit	Diagnostic Trouble Code Detecting Condition
21	 BE3932	Main Heated Oxygen Sensor Signal	(1) Open or short in heater circuit of main heated oxygen sensor (Fr) for 0.5 sec. or more
			(2) Main heated oxygen sensor (Fr) signal voltage is reduced to between 0.35 V and 0.70 V for 90 sec. under conditions (a) ~ (d): (2 trip dectection logic)*3 (a) Engine coolant temp.: Between 80˚C (176˚F) and 95˚C (203˚F) (b) Engine speed: 1,500 rpm or more (c) Load driving (Example A/T in Overdrive, (5th for M/T), A/C ON, Flat road, 80 km/h (50 mph) (d) Main heated oxygen sensor signal voltage: Alternating above and below 0.45 V
22	 BE3932	Engine Coolant Temp. Sensor Circuit	Open or short in engine coolant temp. sensor circuit for 0.5 sec. or more
24	 BE3932	Intake Air Temp. Sensor Signal	Open or short in intake air temp. sensor circuit for 0.5 sec. or more
25	 BE3932	Air–Fuel Ratio Lean Malfunction	(1) Main heated oxygen sensor voltage is 0.45 V or less (lean) for 90 sec. under conditions (a) and (b): (2 trip dectection logic)*3 (a) Engine speed: 1,500 rpm or more (b) Engine coolant temp.: 70˚C or more
			(2) Engine speed varies by more than 20 rpm over the preceding crank angle period during a period of 20 sec. or more under conditions (a) and (b): (2 trip dectection logic)*4 (a) Engine speed: Below 950 rpm (b) Engine coolant temp.: 80˚C (176˚F) or more

*3: See page EG–503.

Trouble Area	Malfunction Indicator Lamp*1		Memory*2	See page
	Normal Mode	Test Mode		
• Open or short in heater circuit of main heated oxygen sensor • Main heated oxygen sensor heater • ECM	ON	N.A.	◯	EG–525
• Main heated oxygen sensor circuit • Main heated oxygen sensor	ON	ON		
• Open or short in engine coolant temp. sensor circuit • Engine coolant temp. sensor • ECM	ON	ON	◯	EG–530
• Open or short in intake air temp. sensor circuit • Intake air temp. sensor • ECM	ON	ON	◯	EG–532
• Open or short in Main heated oxygen sensor circuit • Main heated oxygen sensor • Ignition system • ECM	ON	ON	◯	EG–534
• Open or short in injector circuit • Fuel line pressure (injector leak, blockage) • Mechanical system malfunction (skipping teeth of timing belt) • Ignition system • Compression pressure (foreign object caught in valve) • Mass air flow meter (air intake) • ECM				

*1, 2: See page EG–502

DTC No.	Number of MIL Blinks	Circuit	Diagnostic Trouble Code Detecting Condition
26	 BE3932	Air–Fuel Ratio Rich Malfunction	Engine speed varies by more than 20 rpm over the preceding crank angle period during a period of 25 sec. or more under conditions (a) and (b): (2 trip dectection logic)*3 (a) Engine speed: Below 950 rpm (b) Engine coolant temp.: 80˚C (176˚F) or more
27	 BE3932	Sub Heated Oxygen Sensor Signal	(1) Open or short in heater circuit of sub heated oxygen sensor for 0.5 sec. or more
			(2) Main heated oxygen sensor signal is 0.45 V or more and sub heated oxygen sensor signal is 0.45 V or less under conditions (a) ~ (c): (2 trip dectection logic)*3 (a) Engine coolant temp.: 80˚C (176˚F) or more (b) Engine speed: 1,5000 rpm or more (c) Accel. pedal: Fully depressed for 2 sec. or more
31	 BE3933	Mass Air Flow Meter Circuit	Open or short in mass air flow meter circuit for 3 sec. or more with engine speed less than 3,000 rpm
34	 BE3933	Turbo Pressure Malfunction	All conditions below are detected continuously for 2 sec. or more: (a) Mainfold absolute pressure: 200 kPa (2.0 kgf/cm^2, 29 psi) or more (b) Thottle valve opening angle: 20˚ or more (c) Engine speed: 2,4000 rpm or more
35	 BE3933	Turbo Pressure Sensor Circuit	Open or short in turbo pressure sensor circuit for 0.5 sec. or more
35	 BE3933	Barometric Pressure Sensor Circuit	Open or short in BARO sensor circuit for 0.5 sec. or more

*3: See page EG–503.

Trouble Area	Malfunction Indicator Lamp*1		Memory*2	See page
	Normal Mode	Test Mode		
• Open or short in injector circuit • Fuel line pressure (injector leak, blockage) • Mechanical system malfunction (skipping teeth of timing belt) • Ignition system • Compression pressure (foreign object caught in valve) • Mass air flow meter (air intake) • ECM	ON	ON	◯	EG–534
• Open or short in heater circuit of sub heated oxygen sensor. • Sub heated oxygen sensor • ECM	ON	N.A.	◯	EG–540
• Open or short in sub heated oxygen sensor circuit • Sub heated oxygen sensor • ECM	ON	ON		
• Open or short in mass air flow meter circuit • Mass air flow meter • ECM	ON	N.A.	◯	EG–544
• Actuator (for waste gate valve) • Short in VSV for waste gate valve circuit • ECM	ON	N.A.	◯	EG–546
• Open or short in turbo pressure sensor circuit • Turbo pressure sensor • ECM	ON	ON	◯	EG–549
• ECM	ON	ON	◯	EG–549

*1, 2: See page EG–502.

DTC No.	Number of MIL Blinks	Circuit	Diagnostic Trouble Code Detecting Condition
41	 BE3934	Throttle Position Sensor Signal	Open or short in throttle position sensor circuit for 0.5 sec. or more
42	 BE3934	No. 1 Vehicle Speed Sensor Signal (for A/T)	All conditions below are detected continuously for 8 sec. or more: (a) No. 1 vehicle speed signal: 0 km/h (mph) (b) Engine speed: 3,000 or more (c) Park/neutral position switch: OFF (d) Stop light switch: OFF
		No. 1 Vehicle Speed Sensor Signal (for M/T)	All conditions below are detected continuously for 8 sec. or more: (a) No. 1 vehicle speed signal: 0 km/h (mph) (b) Engine speed: Between 1,500 rpm and 4,000 rpm (c) Engine coolant temp.: 80°C (176°F) or more (d) Load driving
43	 BE3934	Starter Signal	No starter signal to ECM
47	 BE3934	Sub–Throttle Position Sensor Signal	Open or short in sub–throttle position sensor circuit for 0.5 sec. or more
52	 BE3935	Knock Sensor Signal (front side)	No No.1 knock sensor signal to ECM for 4 crank revolutions with engine speed between 2,050 rpm and 5,950 rpm
53	 BE3935	Knock Control Signal	Engine control computer (for knock control) malfunction at engine speed between 650 rpm and 5,200 rpm
55	 BE3935	Knock Sensor Signal (rear side)	No No.2 knock sensor signal to ECM for 4 crank revolutions with engine speed between 2,050 rpm and 5,950 rpm

Trouble Area	Malfunction Indicator Lamp*1		Memory*2	See page
	Normal Mode	Test Mode		
• Open or short in throttle position sensor circuit • Throttle position sensor • ECM	ON	ON	○	EG–552
• No.1 vehicle speed sensor • Telltale light RH • Open or short in No.1 vehicle speed sensor circuit • ECM	OFF	OFF	○	EG–556
• Open or short in starter signal circuit • Open or short in ignition switch or starter relay circuit • ECM	N.A	OFF	X	EG–559
• Open or short sub–throttle position sensor circuit • Sub–throttle position sensor • ECM	OFF	ON	○	EG–552
• Open or short in No.1 knock sensor circuit • No.1 Knock sensor (loosensess) • ECM	ON	N.A	○	EG–561
• ECM	ON	N.A	X	EG–561
• Open or short in No.2 knock sensor circuit • No.2 Knock sensor (looseness) • ECM	ON	N.A	○	EG–561

*1, 2: See page EG–502.

DTC No.	Number of MIL Blinks	Circuit	Diagnostic Trouble Code Detecting Condition
71	 BE3937	EGR System Malfunction	EGR gas temp. and intake air temp. are 60˚C (140˚F) or less for A/T, 55˚C (131˚F) or less for 1 ~ 4 min. under conditions (a) and (b): (2 trip dectection logic)*3 (a) Engine coolant temp.: 60˚C (140˚F) or more (b) EGR operation possible (Example A/T in 3rd speed (5th for M/T), A/C ON, 96 km/h (60 mph), Flat road)
78	 BE3937	Fuel Pump Control Signal	(1) Open or short in fuel pump circuit for 1 sec. or more with engine speed 1,000 rpm or less (2 trip dectection logic)*3
			(2) Open in input circuit for 1 sec. or more with engine speed 1,000 rpm or less (2 trip dectection logic)*3
			(3) Open or short in diagnostic signal line (DI) fuel pump ECU with engine speed 1,000 rpm or less (2 trip dectection logic)*3
51	 BE3935	Switch Condition Signal	(1) 3 sec. or more after engine starts, with closed throttle position switch OFF (IDL1) (2) Park/neutral position switch: OFF (Shift position in ''R'', ''D'', ''2'', or ''L'' position) (3) A/C switch ON

*1: ”ON” displayed in the diagnostic mode column indicates that the Malfunction Indicator Lamp is lit up when a malfunction is defected. ”OFF” indicates that the ”CHECK” does not light up during malfunction diagnosis, even if a malfunction is detected. ”N.A.” indicates that the item is not included in malfunction diagnosis.

*2: ”○” in the memory column indicates that a diagnostic trouble code is recorded in the ECM memory when a malfunction occurs. ”X” indicates that a diagnostic trouble code is not recorded in the ECM memory even if a malfunction occurs. Accordingly, output of diagnostic results in normal or test mode is done with the IG switch ON.

Trouble Area	Malfunction Indicator Lamp*1		Memory*2	See page
	Normal Mode	Test Mode		
• Open in EGR gas temp. sensor circuit • Short in VSV circuit for EGR • EGR hose disconnected, valve stuck • Clogged EGR gas passage • ECM	ON	ON	○	EG–564
• Open or short in fuel pump ECU circuit • Fuel pump ECU • Fuel pump • ECM power source circuit • ECM	OFF	ON	○	EG–568
• A/C switch circuit • Throttle position sensor IDL circuit • Park/neutral position switch circuit • Accelerator pedal and cable • ECM	N.A.	OFF	X	EG–571

*3: This indicates items for which ”2 trip detection logic” is used. With this logic, when a logic malfunction is first detected, the malfunction is temporarily stored in the ECM memory. If the same case is detected again during the second drive test, this second detection causes the Malfunction Indicator Lamp to light up. The 2 trip repeats the same mode a 2nd time. (However, the IG switch must be turned OFF between the 1st trip and 2nd trip).
In the Test Mode, the Malfunction Indicator Lamp lights up the 1st trip a malfunction is detected.

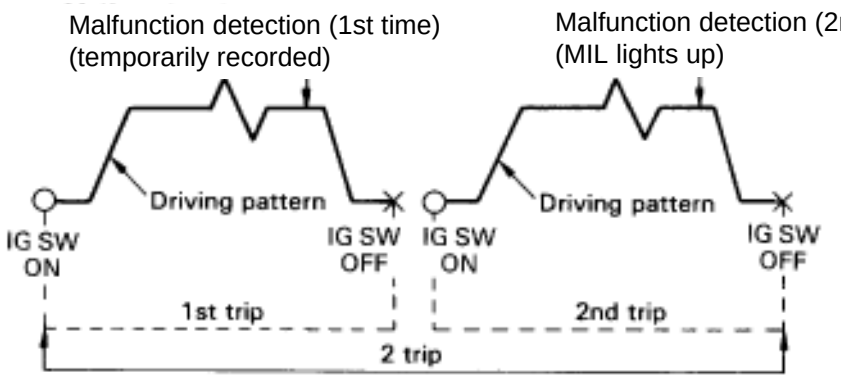

FAIL–SAFE CHART

If any of the following codes is detected, the ECM enters fail–safe mode.

DTC No.	Fail–Safe Operation		Fail–Safe Deactivation Conditions
14	Fuel cut		6 IGF signals detected in 6 consecutive ignitions
16	Torque control prohibited		Returned to normal condition
22	THW is fixed at 80˚C (176˚F)		Returned to normal condition
24	THA is fixed at 20˚C (68˚F)		Returned to normal condition
31	Volume of air flowing is measured by turbo pressure Sensor to determine injection volume and ignition Timing		Returned to normal condition
34	Fuel cut		Returned to normal condition
35	Turbo Pressure Sensor	Fuel cut	Returned to normal condition
	BARO Sensor	Atmospheric pressure is fixed at 101.3 kPa (760 mmHg, 29.92 in·Hg)	Returned to normal condition
41	VTA1 is fixed at closed throttle position		The following must each be repeated at least 2 times consecutively: • 0.1 V × VTA1 × 0.95 V • IDL: ON
47	VTA2 is fixed at wide open throttle Position		The following must be repeated at least 2 times consecutively • 0.1 V × VTA2 × 0.95 V
52	Max. timing retardation		IG switch OFF
53	Max. timing retardation		Returned to normal condition
55	Max. timing retardation		IG switch OFF

Back–Up Function

If there is trouble with the program in the ECM and the ignition signals (IGT) are not output from the microcomputer, the ECM controls fuel injection and ignition timing at predetermined levels as a back–up function to make it possible to continue to operate the vehicle.

Furthermore, the injection duration is calculated from the starting signal (STA) and the throttle position signal (IDL). Also, the ignition timing is fixed at the initial ignition timing, 10˚BTDC, without relation to the engine speed.

HINT: If the engine is controlled by the back–up function, the malfunction indicator lamp lights up to warn the driver of the malfunction but the diagnostic trouble code is not output.

CHECK FOR INTERMITTENT PROBLEMS

As described in the preceding paragraph, abnormality detection ability in the test mode is increased compared to that in the normal mode, so that when intermittent problems occur in the ECM signal circuits (G1, G2, NE, THW, THA, VTA1, VTA2) shown in the table below, the appropriate diagnostic trouble code is output.

Accordingly, when the diagnostic trouble codes shown in the table opposite (13, 22, 24, 41, 47) are output during the diagnostic trouble code check, and inspection of the appropriate circuits reveals no abnormality, check for intermittent problems as described below.

By checking for intermittent problems, the place where intermittent problems are occurring due to poor contacts can be isolated.

DTC	Circuit
13	G, NE signal circuit (No.2)
22	Engine coolant temp. sensor circuit
24	Intake air temp. sensor circuit
41	Throttle position sensor circuit
47	Sub–throttle position sensor circuit

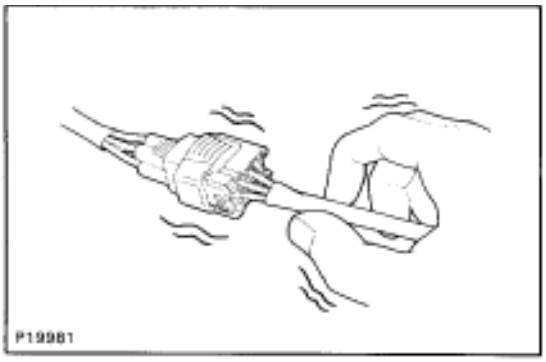

CLEAR DIAGNOSTIC TROUBLE CODES

See page EG–493**.**

SET TEST MODE

1. With the ignition switch OFF, using SST, connect the terminals TE2 and E1 of the data link connector 2.
   SST 09843–18020
2. Start the engine and check to see the malfunction indicator lamp goes off.

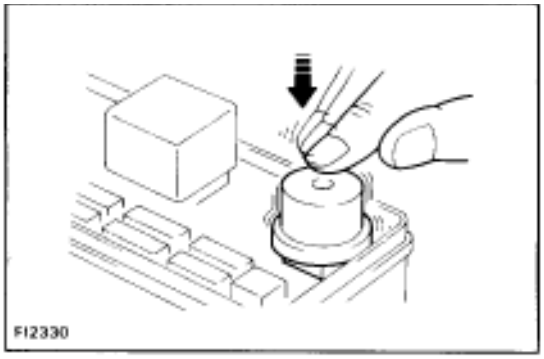

PERFORM A SIMULATION TEST

Using the symptom simulation (See page IN–24), apply vibration to and pull lightly on the wire harness, connector or terminals in the circuit indicated by the malfunction code.

In this test, if the malfunction indicator lamp lights up, it indicates that the place where the wire harness, connector or terminals being pulled or vibrated has faulty contact. Check that point for loose connections, dirt on the terminals, poor fit or other problems and repair as necessary.

HINT: After cancelling out the diagnostic trouble code in memory and set the test mode, if the malfunction indicator lamp does not go off after the engine is started, check thoroughly for faulty contacts, etc., then try the check again, if the malfunction indicator lamp still does not go off, check and replace ECM.

BASIC INSPECTION

In many cases, by carrying out the basic engine check shown in the following flow chart, the location causing the problem can be found quickly and efficiently. Therefore, use of this check is essential in engine troubleshooting.

If there is a problem, and a normal code is displayed, proceed to the matrix chart of problem symptoms on page EG–514. Make sure that every likely cause of the problem is checked.

1 **Is battery positive voltage 11 V or more when engine is stopped?**

YES

NO → **Charge or replace battery.**

2 **Is engine cranked?**

YES

NO → **Proceed to matrix chart of problem symptom on page EG–514.**

3 **Does engine start?**

YES

NO → **Go to step 7.**

4 **Check air filter.**

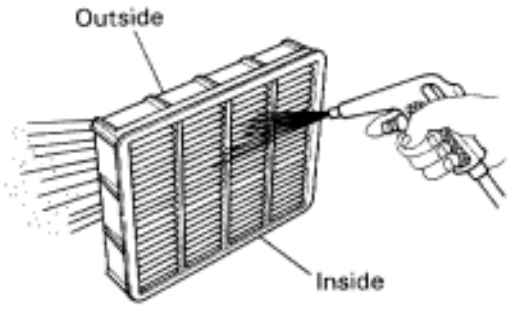

P Remove air filter.

C Visually check that the air filter is not excessively dirty or oily.

Hint If necessary, clean the air filter with compressed air. First blow from inside thoroughly, then blow from outside of the air filter.

OK

NG → **Repair or replace.**

5 Check idle speed.

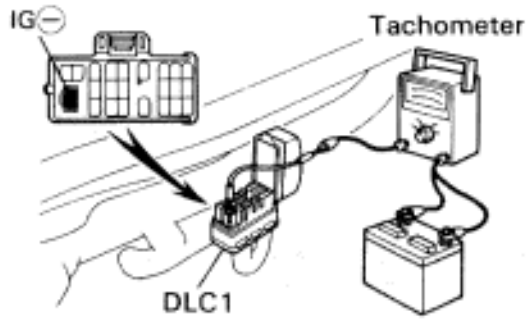

P11291

P (1) Shift transmission into “N” position.
(2) Warm up engine to normal operating tempera–ture.
(3) Switch OFF all accessories.
(4) Switch OFF air conditioning.
(5) Connect tachometer test probe to terminal IG ⊖ of data link connector 1.

C Check Idle speed.

OK **Idle speed: 650 ± 50 rpm**

Caution

- **Never allow tachometer test probe to touch ground as it could result in damage to igniter and/or ignition coil.**
- **As some tachometers are not compatible with this ignition system, we recommended that you confirm the compatibility of your unit before use.**

OK

NG **Proceed to matrix chart of problem symptoms on page EG–514.**

6 Check ignition timing.

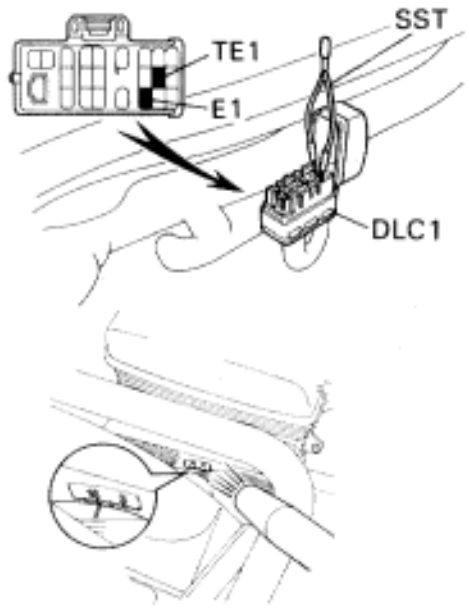

P11288
P11833

P (1) Shift transmission into “N” position.
(2) Warm up engine to normal operating tempera–ture.
(3) Keep the engine speed at idle.
(4) Using SST, connect terminals TE1 and E1 of data link connector 1.
SST 09843–18020
(5) Connect a timing light clip to the check wire.
(See page EG–20)

C Check ignition timing.

OK **Ignition timing: 10 ± 2° BTDC @ idle**

OK

NG **Proceed to page EG–518 and continue to troubleshoot.**

Proceed to matrix chart of problem symptoms on page EG–514.

7 Check fuel pressure.

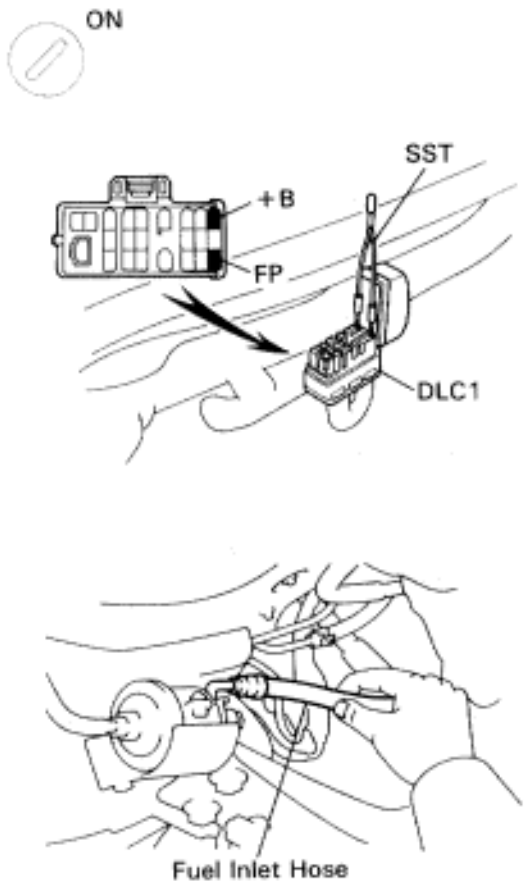

P
(1) Be sure that there is enough fuel in the tank.
(2) Turn ignition switch ON.
(3) Using SST, connect terminals FP and +B of data link connector 1.
SST 09843–18020

C
Check that there is pressure in the hose from the fuel filter.

Hint
If there is fuel pressure, you will hear the sound of fuel flowing.

Caution
Never make a mistake with the terminal connection position as this will cause a malfunction.

OK

NG **Proceed to page EG–264 and continue to troubleshoot.**

8 Check for spark.

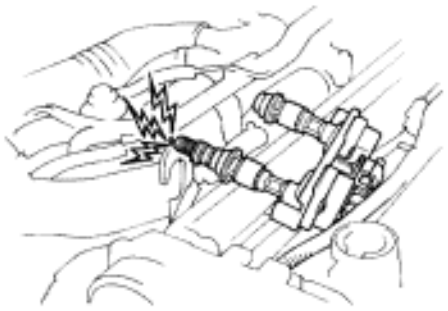

P
(1) Remove ignition coil (See page IG–26)
(2) Remove spark plug.
(3) Install the spark plug to the ignition coil, and connect the ignition coil connector.
(4) Ground the spark plug.

C
Check if spark occurs while engine is being cranked.

Hint
To prevent excess fuel being injected from the injectors during this test, don't crank the engine for more than 1 — 2 seconds at a time.

OK

NG **Proceed to page IG–21 and continue to troubleshoot.**

Proceed to matrix chart of problem symptoms on page EG–514.

PARTS LOCATION

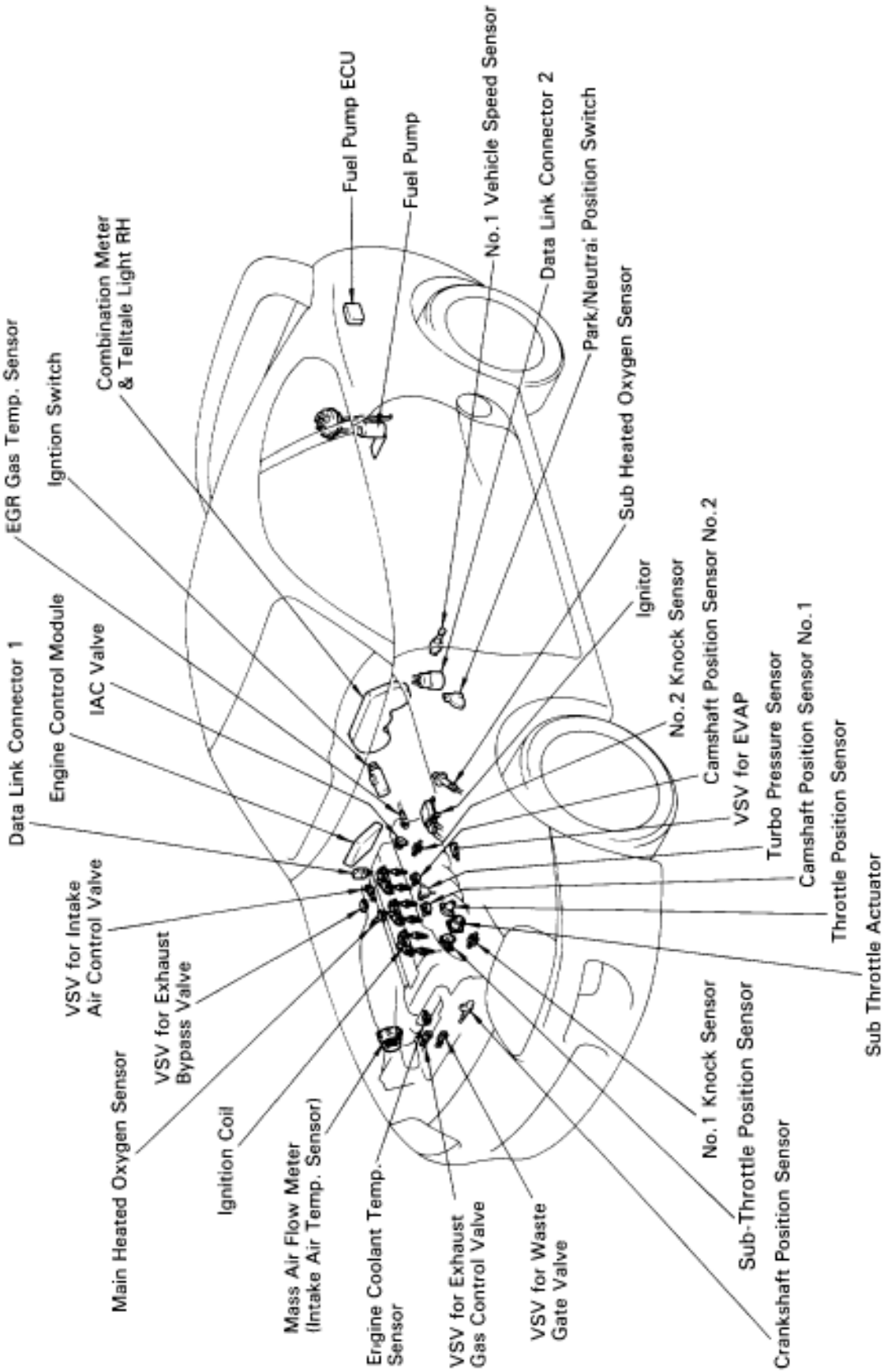

STANDARD VALUE OF ECM TERMINALS

Connectors of the engine control module are waterproof and are the bolt type.

For waterproof type connectors, in order to measure the voltage of ECM terminals and the resistance of connected parts, connect the inspection sub wire harness between the ECM and vehicle wire harness, then do the inspection.

The inspection method of inserting a tester probe from the other side of connector significantly reduces the waterproof performance.

Disconnect the connector by fully loosening the bolt.

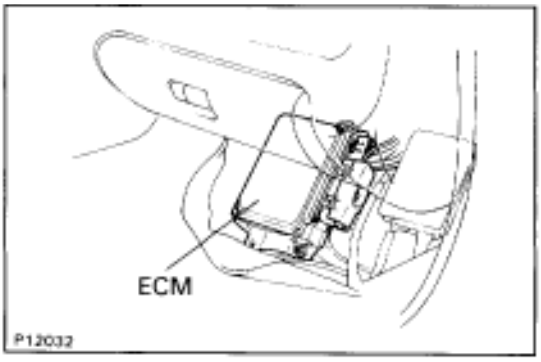

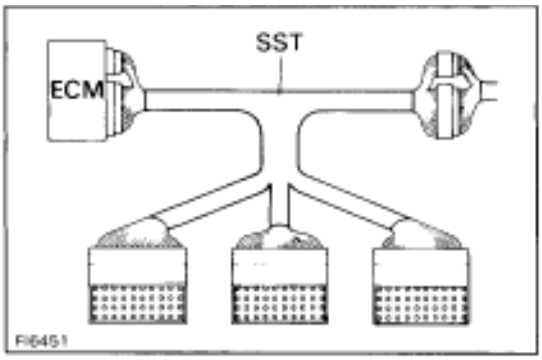

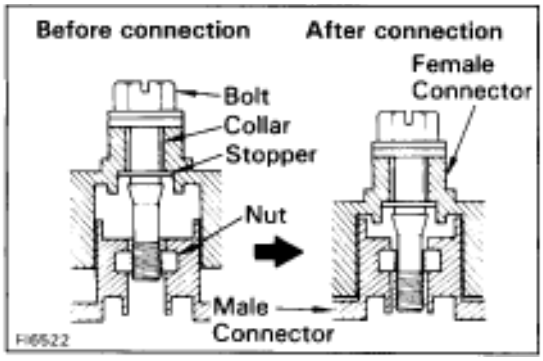

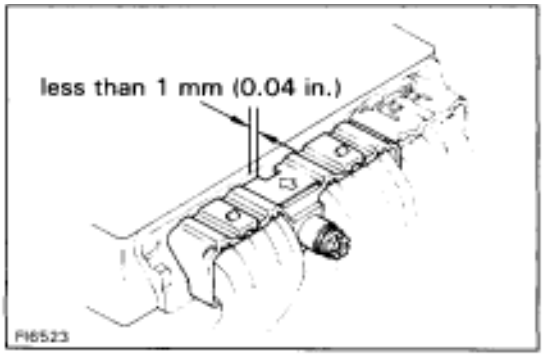

PREPARATION

1. Turn the ignition switch OFF.
2. Turn up the passenger side floor carpet.
   (See page EG–324)
3. Remove the ECM protector.
4. Disconnect the connector from the ECM.

   After completely loosening the bolt, the 2 parts of the connector can be separated.

   NOTICE:
   - **Do not pull the wire harness when disconnecting the connector.**
   - **When disconnecting the connector, the ECM's back–up power source is cut off, so the malfunction codes, etc. recorded in the ECM memory are cancelled.**
   - **Never insert a tester probe or male terminal used for inspection purposes into the female terminal of the vehicle wire harness. Otherwise, the female terminal may be widened, which can result in faulty connection.**
5. Connect SST (check harness "A") between the ECM and connector of the vehicle wire harness.
   SST 09990–01000

   HINT: The arrangement of the check connector terminals are the same as those of the ECM.

   See page EG–511.
6. Disconnect the SST.
   SST 09990–01000
7. Reconnect the connector to the ECM.

(a) Match the male connector correctly with the female connector, then press them together.

(b) Tighten the bolt.

Make sure the connector is completely connected by tightening the bolt until there is a clearance of less than 1 mm (0.04 in.) between the bottom of the male connector and the end of the female connector.

8. Install the ECM protector and floor carpet.

STANDARD VALUE OF ECM TERMINALS

ECM Terminals

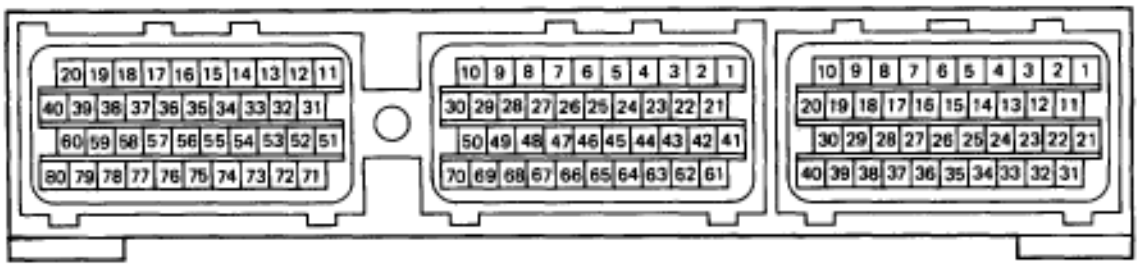

Symbols (Terminals No.)	STD Voltage (V)	Condition
BATT (A33) – E1 (B69)	9 ~ 14	Always
IGSW (A1) + B (A31) – E1 (B69)	9 ~ 14	IG switch ON
VCC (B41) – E2 (B65)	4.5 ~ 5.5	IG switch ON
IDL1 (B64) – E2 (B65)	0 ~ 3.0	IG switch ON and apply vacuum to the throttle opener Throttle valve fully closed
	9 ~ 14	IG switch ON Throttle valve fully open
IDL2 (B63) – E2 (B65)	0 ~ 3.0	IG switch ON Sub–throttle valve fully closed
	9 ~ 14	IG switch ON Sub–throttle valve fully open
VTA1 (B43) VTA2 (B42) – E2 (B65)	0.3 ~ 0.8	IG switch ON Main or sub–throttle valve fully closed
	3.2 ~ 4.9	IG switch ON Main or sub–throttle valve fully open
THA (B45) – E2 (B65)	0.5 ~ 3.4	Idling, Intake air temp. 0°C (32°F) to 80°C (176°F)
THW (B44) – E2 (B65)	0.2 ~ 1.0	Idling, Engine coolant temp. 60°C (140°F) to 120°C (248°F)
STA (B77) – E1 (B69)	6.0 or more	Cranking
#10 (B20), #20 (B19) #30 (B18), #40 (B17) #50 (B16), #60 (B15) – E01 (B80)	9 ~ 14	IG switch ON
	Pulse generation (See page EG–583)	Idling
IGT1 (B57), IGT2 (B56) IGT3 (B55), IGT4 (B54) IGT5 (B53), IGT6 (B52) – E1 (B69)	9 ~ 14	IG switch ON
	Pulse generation (See page EG–521)	Idling
IGF (B58) – E1 (B69)	4.5 ~ 5.5	IG switch ON
	Pulse generation (See page EG–521)	Idling
G1 (B26) – G1 ⊖ (B6) G2 (B25) – G2 ⊖ (B5) NE (B27) – NE ⊖ (B7)	Pulse generation (See page EG–517)	Idling
M-REL (A24) – E1 (B69)	9 ~ 14	IG switch ON
FPC (A22) – E1 (B69)	Below 1.5	IG switch ON
	Pulse generation (4.5 ~ 5.5)	Idling
DI (A21) – E1 (B69)	7.0 or more	Idling
EVAP (B74) – E01 (B80)	9 ~ 14	IG switch ON

Symbols (Terminals No.)	STD Voltage (V)	Condition
EGR (B75)–E01 (B80)	Below 2.0	Idling
	9 ~ 14	Engine speed at 3,500 rpm
VG (B66)–E21 (B28)	0.7 ~ 1.7	Idling
ISC1 (B35), ISC2 (B34) ISC3 (B33), ISC4 (B32) — E01 (B80)	Pulse generation (See page EG–586)	Idling when A/C switch ON or OFF
VF1 (B29)–E1 (B69)	1.8 ~ 3.2	Maintain engine speed at 2,500 rpm for 2 minutes after warming up then return to Idling
OX1 (B48), OX2 (B47)–E1 (B69)	Pulse generation (See page EG–529)	Maintain engine speed at 2,500 rpm for 2 minutes after warming up
HT1 (B71), HT2 (B72)–E01 (B80)	Below 3.0	Idling
	9 ~ 14	IG switch ON
KNK1 (B50), KNK2 (B49)–E1 (B69)	Pulse generation (See page EG–563)	Idling
NSW (B76)–E1 (B69)	9 ~ 14	IG switch ON Other shift position in ”P”, ”N” position
	0 ~ 3.0	IG switch ON Shift position in ”P”, ”N” position
SP1 (A2)–E1 (B69)	Pulse generation (See page EG–556)	IG switch ON Rotate driving wheel slowly
TE1 (A20)–E1 (B69)	9 ~ 14	IG switch ON
TE2 (A19)–E1 (B69)	9 ~ 14	IG switch ON
W (A6)–E1 (B69)	9 ~ 14	Idling
	0 ~ 3.0	IG switch ON
OD1 (A12)–E1 (B69)	9 ~ 14	IG switch ON
A/C (A34)–E1 (B69)	7.5 ~14	A/C switch OFF
	0 ~ 1.5	A/C switch ON (At idling)
ACMG (A23)–E1 (B69)	0 ~ 3.0	A/C switch ON (At idling)
	9 ~ 14	A/C switch OFF
FPU (B73)–E01 (B80)	9 ~ 14	IG switch ON
	Below 2.0	Restarting at high engine coolant temp.
ELS (A15)–E1 (B69)	7.5 ~ 14	Defogger switch and taillight switch ON
	0 ~ 1.5	Defogger’s switch and taillight switch OFF
VSV1 (B40)–E1 (B69)	Below 3.0	Immediately after racing
	9 ~ 14	Idling
VSV2 (B39)–E1 (B69)	Below 3.0	For 2 sec. after IG switch ON to OFF
	9 ~ 14	Idling
VSV3 (B38)–E1 (B69)	9 ~ 14	Idling
PMC (B60)–E1 (B69)	Below 3.0	Idling (for M/T) Idling and shift position ”P”, ”N” position (for AT)
	9 ~ 14	Idling and other shift position ”P”, ”N” position (for A/T))
PM1 (B62)–E2 (A65)	2.3 ~ 3.0	IG switch ON
	1.8 ~ 2.4	IG switch ON and apply vacuum 26.7 kPa (200 mmHg, 7.9 in Hg)

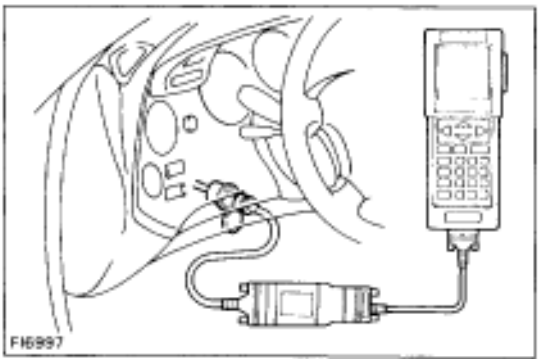

REFERENCE VALUE OF ECM DATA

HINT: ECM data can be monitored by TOYOTA hand–held tester.

1. Hook up the TOYOTA hand–held tester to DLC2.
2. Monitor ECM data by following the prompts on the tester screen.

Please refer to the TOYOTA hand–held tester operator's manual for further details.

REFERENCE VALUE

Item	Inspection condition	Reference value
INJECTOR	Engine cold to hot Engine idling at normal operating temp.*1	Gradually decreases Approx. 1.8 msec.
IGNITION	Increase engine speed	Gradually increases
IAC STEP #	Engine idling at normal operating temp..*1 A/C switch ON A/T shifting in "D" position Ignition switch ON (Engine off)	20 ~ 30 steps Step increases Step increases Approx. 125 steps'
ENGINE SPEED	RPM kept stable (Comparison with tachometer)	No great changes
MAF	Engine idling at normal operating temp..*1 Increase engine speed	Approx. 3.8 g/s Gradually increases
ECT	Engine at normal operating temp.	75–95°C (185–203°F).*2
THROTTLE	Closed throttle position Wide open throttle From closed throttle position to wide open throttle	Below 5° Above 70° Gradually increases
VEHICLE SPD	During driving (Comparison with speedometer)	No large differences
TARGET A/FL	Engine idling at normal operating temp.	2.50 ± 1.25 V*3
A/F FB LEFT	RPM stable at 2,500 rpm with normal operating temp.	ON
KNOCK FB	Depress throttle pedal suddenly during idling	ON
STA SIGNAL	During cranking	ON
CTP SIGNAL	Closed throttle position	ON
A/C SIGNAL	A/C switch ON	ON
PNP SIGNAL.*4	When shifting from "P" or "N" position into a position other than "P" or "N"	GEAR
OxL	RPM stable at 2,500 rpm with normal operating temp.	RICH LEAN is repeated

*1: All accessories and A/C switched OFF

*2: If the engine coolant temp. sensor circuit is open or shorted, the ECM assumes an engine coolant temp. value of 80°C (176°F).

*3: When feedback control is forbidden, 0 V is displayed.

*4: A/T only

MATRIX CHART OF PROBLEM SYMPTOMS

When the malfunction code is not confirmed in the diagnostic trouble code check and the problem still can not be confirmed in the basic inspection, proceed to this matrix chart and troubleshoot according to the numbered order given below.

Symptom	Suspect area	See page	Mass air flow meter circuit	Starter signal circuit	EGR system	Switch condition signal circuit	Park/neutral position switch circuit	ECM power source circuit	Back up power source circuit	Injector circuit	IAC valve circuit	Fuel pump control circuit	VSV circuit for fuel Pressure Control	Turbo control circuit	A/C signal circuit (Compressor circuit)	Starter and Starter relay	Ignition signal circuit (Spark test)	Spark plug	Ignition coil	Compression	A/T faulty	Theft deterrent ECU	Engine control module (ECM)
			EG–544	EG–559	EG–564	EG–571	EG–574	EG–576	EG–581	EG–583	EG–586	EG–568	EG–595	EG–589	AC–62	ST–3,	IG–21	IG–22	IG–23	EG–9	AT2–101	BE–123	IN–35
Does not start	Engine does not crank						2									1						3	
	No initial combustion							1		5		3					2	4					
	No complete combustion									5		1					4	3	2				
Difficult to start	Engine cranks normally			1						7	2	3						5	4	6			
	Cold engine			1						4	2	3						6	5				
	Hot engine			1						5	2	4	3					7	6				
Poor Idling	Incorrect first idle					1					2												
	High engine idle speed					1	5	4	6		2				3								
	Low engine idle speed		7			3	4		8	6	1	5			2								
	Rough idling		3		5	1			11	4	2	8					6	10	9	7			
	Hunting		3			1		4			2	5											
Poor Driveability	Hesitation/Poor acceleration		2			1				3		4		8			5	7	6		9		
	Muffler explosion (after fire)					1				4								3	2				
	Surging					1				4		2						3					
Engine Stall	Soon after starting		2								3	1											
	After accelerator pedal depressed		2			1																	
	After accelerator pedal released									1	2												3
	During A/C operation										1				2								3
	When shifting N to D						1				2												

CIRCUIT INSPECTION

DTC 12 G NE Signal Circuit (No.1)

CIRCUIT DESCRIPTION

Camshaft position sensors (G1 and G2 signals) are mounted on the intake side of the cylinder head and the crankshaft position sensor (NE signal) is mounted on the oil pump body. These sensors consist of a timing rotor and pick up coil.

The G1, G2 timing rotors have 1 tooth each on their outer circumference and are mounted on the intake camshaft.

When the intake camshaft rotates, the protrusion on the timing rotors and the air gap on the pick up coil change, causing fluctions in the magnetic field and generating an electromotive force in the pick up coil.

The NE timing rotor has 12 teeth and is mounted on the crankshaft. The NE signal sensor generates 12 NE signals per engine revolution. The ECM detects the standard crankshaft angle based on the G1, G2 signals, and the actual crankshaft angle and the engine speed by the NE signals.

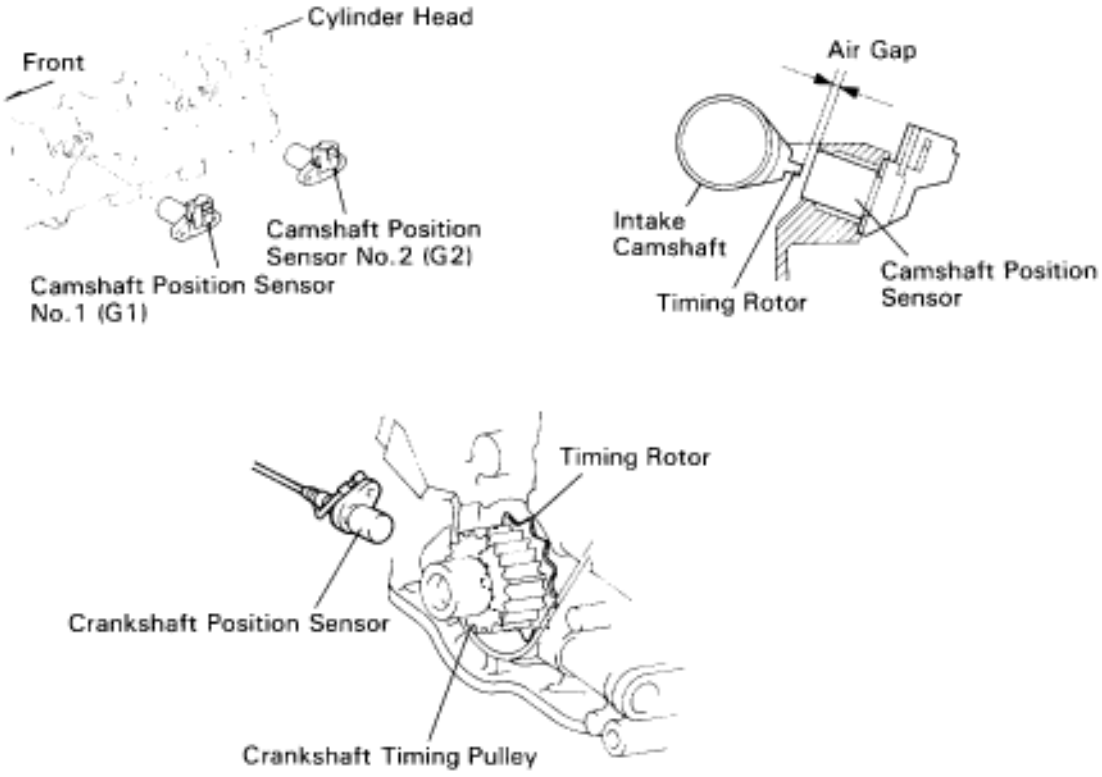

FI6920 FI6921 FI6922

DTC No.	Diagnostic Trouble Code Detecting Condition	Trouble Area
12	No “NE” or “G1” and “G2” signal to ECM for 2 sec. or more after cranking	• Open or short in crankshaft position sensor, camshaft position sensor No.1, No.2 circuit • Crankshaft position sensor • Camshaft position sensor No.1, No.2 • Starter • ECM

WIRING DIAGRAM

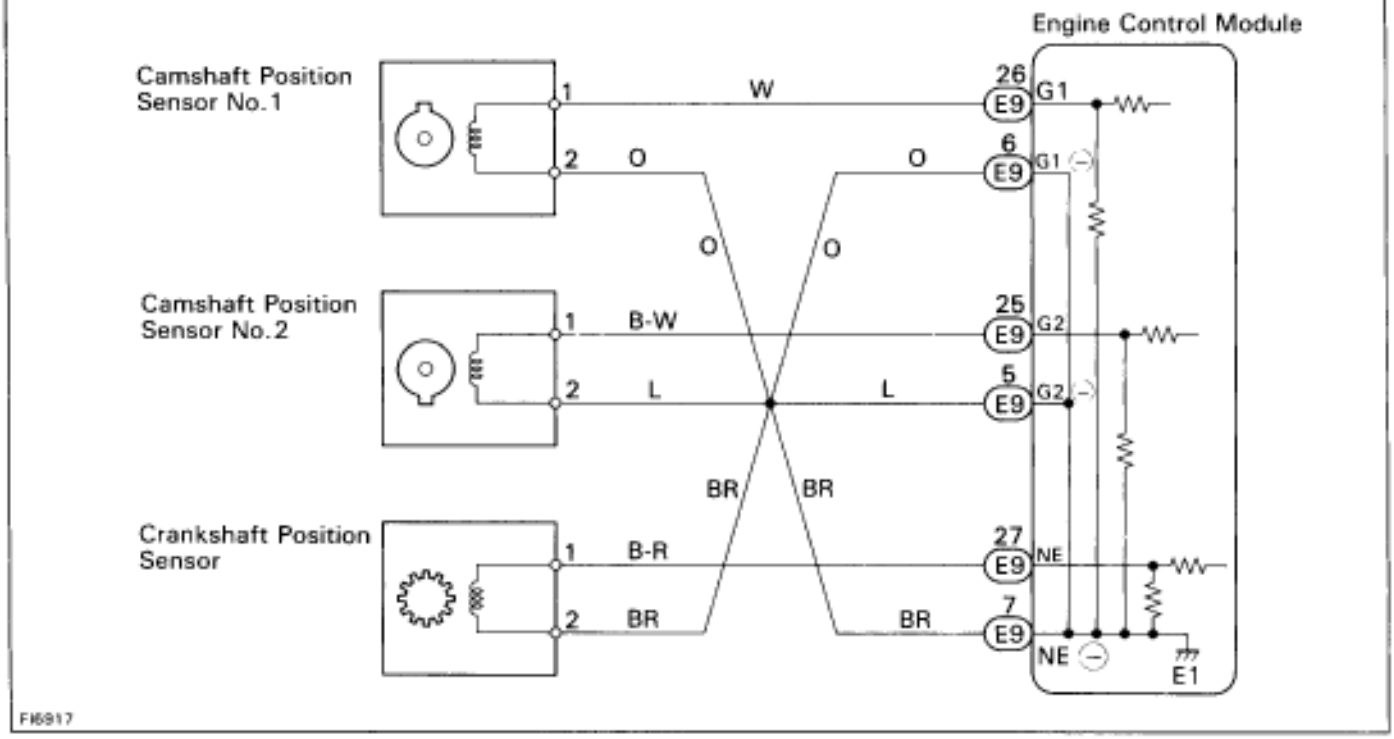

INSPECTION PROCEDURE

1 Check crankshaft position sensor, camshaft position sensors No.1, No.2.

For Crankshaft Position Sensor

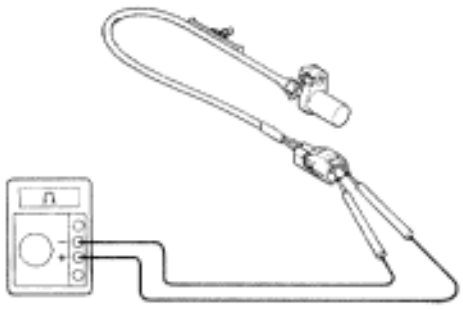

For Camshaft Position Sensor No.1, No.2



P12341
P12177

P For crankshaft position sensor, remove crankshaft position sensor (See page IG–30).

For camshaft position sensor No.1, No.2, disconnect camshaft position sensor No.1 No.2 connectors.

C Measure resistance of crankshaft position sensor, camshaft position sensor No.1 and No.2.

OK

		Resistance	
Camshaft Position Sensor	Cold	835 ~ 1,400 Ω	ND
		985 ~ 1,600 Ω	Aisan
	Hot	1,060 ~ 1,645 Ω	ND
		1,265 ~ 1,890 Ω	Aisan
Camshaft Position Sensor No.1 and No.2	Cold	835 ~ 1,400 Ω	ND
		985 ~ 1,600 Ω	Aisan
	Hot	1,060 ~ 1,645 Ω	ND
		1,265 ~ 1,890 Ω	Aisan

"Cold" is from — 10˚C (14˚F) to 50˚C (122˚F) and "Hot" is from 50˚C (122˚F) to 100˚C (212˚F).

Reference **INSPECTION USING OSCILLOSCOPE**

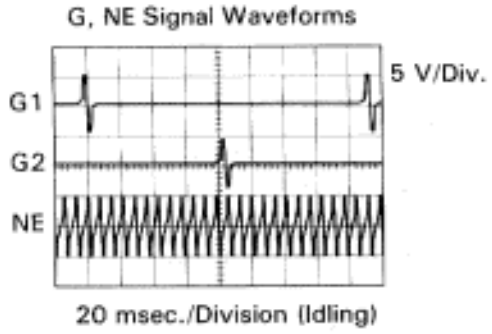

- During cranking or idling, check waveforms between terminals G1, G2 and G1 ×, G2 ×, NE and NE × of engine control module.

HINT: The correct waveforms are as shown.

OK

NG → **Replace crankshaft position sensor, camshaft position sensor No.1, No.2.**

2 **Check for open and short in harness and connector between engine control module and each sensor (See page IN–30).**

OK

NG → **Repair or replace harness or connector.**

3 **Inspect sensor installation and teeth of timing rotor.**

OK

NG → **Tighten the sensor. Replace timing rotor (Intake camshaft, crankshaft timing pulley).**

Check and replace engine control module.

DTC 13 G NE Signal Circuit (No.2)

CIRCUIT DESCRIPTION

Refer to G, NE signal circuit (No.1) on page EG–515

DTC No.	Diagnostic Trouble Code Detecting Condition	Trouble Area
13	No NE signal to ECM for 0.1 sec. or more at 1,000 rpm or more	• Open or short in crankshaft position sensor circuit • Crankshaft position sensor • ECM
	NE signal does not pulse 12 times to ECM during the interval between G1 and G2 pulses	• Open or short in crankshaft position sensor circuit • Mechanical system malfunction (skipping teeth of timing belt, belt stretched) • Crankshaft position sensor • ECM
	Deviation in G (G1, G2) and NE signal Continues for 3 sec. during idling throttle fully closed after engine warmed up	• Mechanical system malfunction (skipping teeth of timing belt, belt stretched) • Camshaft position sensor No. 1, No.2 • ECM

INSPECTION PROCEDURE

1 Inspect sensor installation. Check if any teeth of NE signal plate are broken.

- OK
- NG → Tighten sensor. Replace timing rotor.

2 Check valve timing (Check for loose and jumping teeth of timing belt (See page EG–33)).

- OK
- NG → Adjust valve timing (repair or replace timing belt).

Check for intermittent problems. (See page EG–505)

DTC 14 Ignition Signal Circuit

CIRCUIT DESCRIPTION

The ECM determines the ignition timing, turns on Tr_1 at a predetermined angle (˚CA) before the desired ignition timing and outputs an ignition signal (IGT) ”1” to the igniter.
Since the width of the IGT signal is constant, the dwell angle control circuit in the igniter determines the time the control circuit starts primary current flow to the ignition coil based on the engine rpm and ignition timing one revolution ago, that is, the time the Tr_2 turns on.
When it reaches the ignition timing, the ECM turns Tr_1 off and outputs the IGT signal ”O”.
This turns Tr_2 off, interrupting the primary current flow and generating a high voltage in the secondary coil which causes the spark plug to spark. Also, by the counter electromotive force generated when the primary current is interrupted, the igniter sends an ignition confirmation signal (IGF) to the ECM.
The ECM stops fuel injection as a fail safe function when the IGF signal is not input to the ECM.

DTC No.	Diagnostic Trouble Code Detecting Condition	Trouble Area
14	No IGF signal to ECM for 4 ~ 7 consecutive IGT signals with engine speed less than 3,000 rpm	• Open or short in IGF circuit from igniter to ECM • Igniter • ECM

WIRING DIAGRAM

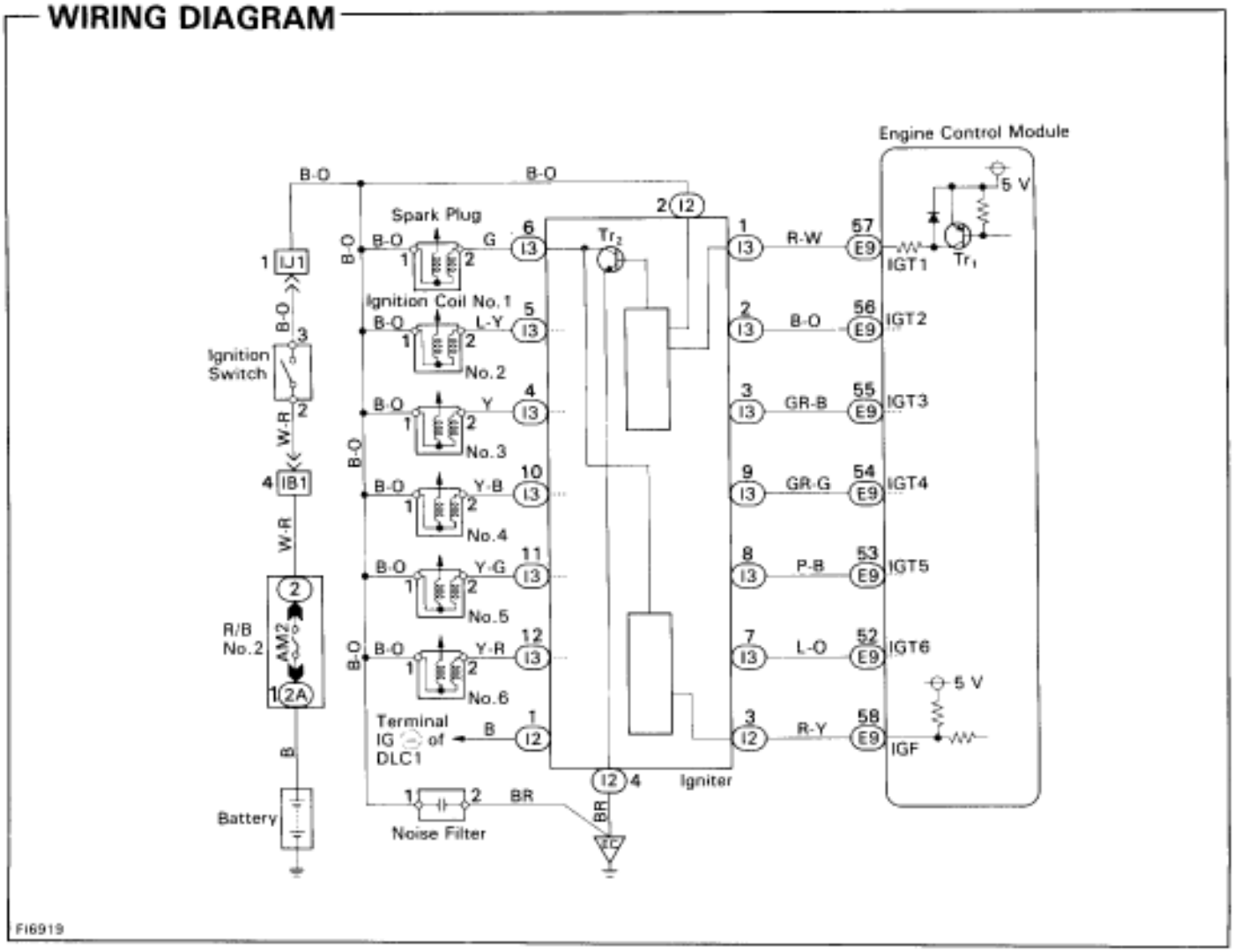

INSPECTION PROCEDURE

1 Check for spark.

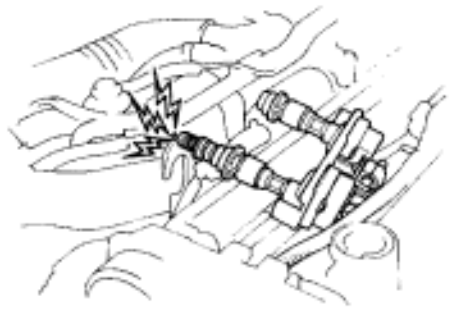

P
(1) Remove ignition coil. (See page IG–26)
(2) Remove spark plug.
(3) Install the spark plug to the ignition coil, and connect the ignition coil connector.
(4) Ground the spark plug.

C
Check if spark occurs while engine is being cranked.

Hint
To prevent excess fuel being injected from injectors during this test, don't crank the engine for more than 1—2 seconds at a time.

OK

NG → Go to step 4.

2 Check for open and short in harness and connector in IGF signal circuit between engine control module and igniter (See page IN–30).

OK

NG → **Repair or replace harness or connector.**

3 Disconnect igniter connector and check voltage between terminal IGF of engine control module connector and body ground.

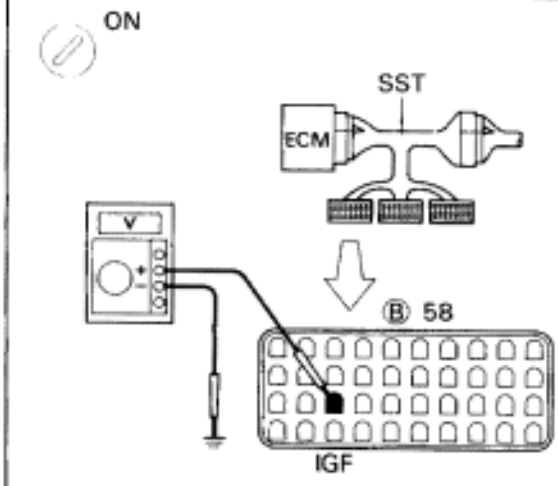

P
(1) Disconnect igniter connector.
(2) Connect SST (check harness "A"). (See page EG–510)
SST 09990–01000
(3) Turn ignition switch ON.

C
Measure voltage between terminal IGF of engine control module connector and body ground.

OK
Voltage: 4.5 — 5.5 V

NG

OK → **Replace igniter.**

Check and replace engine control module.

4 Check voltage between terminal IGT (1 ~ 6) of engine control module connector and body ground.

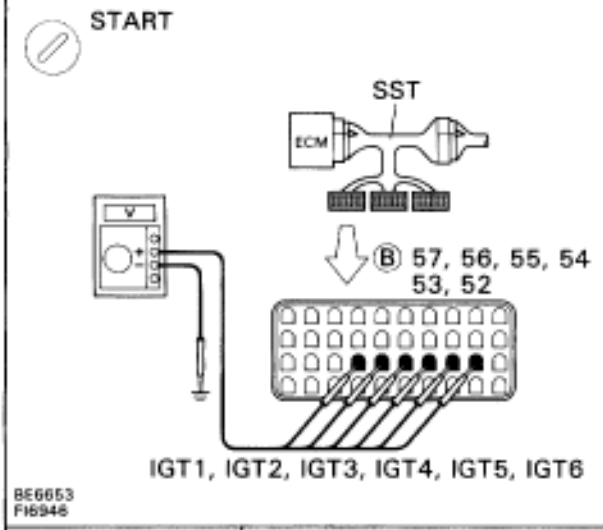

P Connect SST (check harness “A”).
(See page EG–510)
SST 09990–01000

C Measure voltage between terminal IGT (1 ~ 6) of engine control module connector and body ground when engine is cranked.

OK **Voltage: 0.5 — 1.0 V**
(Neither 0 V nor 5 V)

Reference **INSPECTION USING OSCILLOSCOPE**

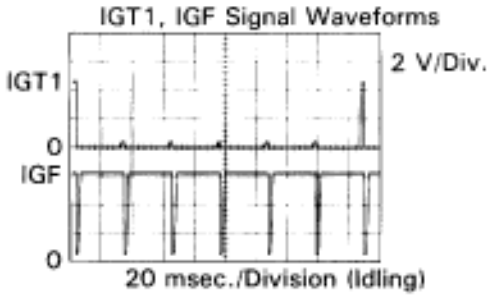

- During idling, check waveforms between terminals IGT1, IGF and E1 of engine control module.

HINT: The correct rectangular waveforms are as shown, IGT2, IGT3, IGT4, IGT5 and IGT6 signal waveforms are same as IGT1 signal waveform.

OK

NG Go to step 8.

5 Check voltage between terminal 2 of igniter connector (I2) and body ground.

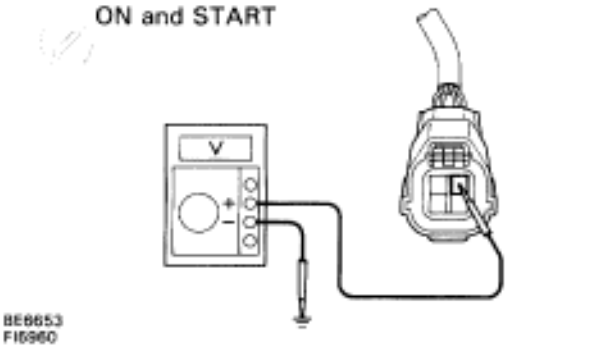

P Disconnect igniter connector.

C Measure voltage between terminal 2 of igniter connector (I2) and body ground, when ignition switch is turned to “ON” and and “START” position.

OK **Voltage: 9 — 14 V**

OK

NG **Check and repair igniter power source circuit.**

6 **Check for open and short in harness and connector between ignition switch and ignition coil, ignition coil and igniter (See page IN–30).**

OK

NG → **Repair or replace harness or connector.**

7 **Check ignition coil.**

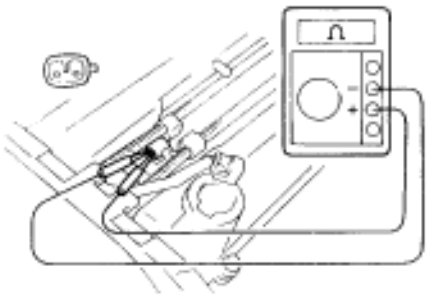

P Disconnect ignition coil connector.
(See page IG–23)

C Measure resistance between terminals of ignition coil connector.

OK

	Resistance
Cold	0.54 – 0.84 Ω
Hot	0.68 – 0.98 Ω

"Cold" is from — 10°C (14°F) to 50°C (122°F) and "Hot" is from 50°C (122°F) to 100°C (212°F).

OK

NG → **Replace ignition coil.**

Replace igniter.

8 **Disconnect igniter connector and check voltage between terminal IGT (1 ~ 6) of engine control module connector and body ground.**

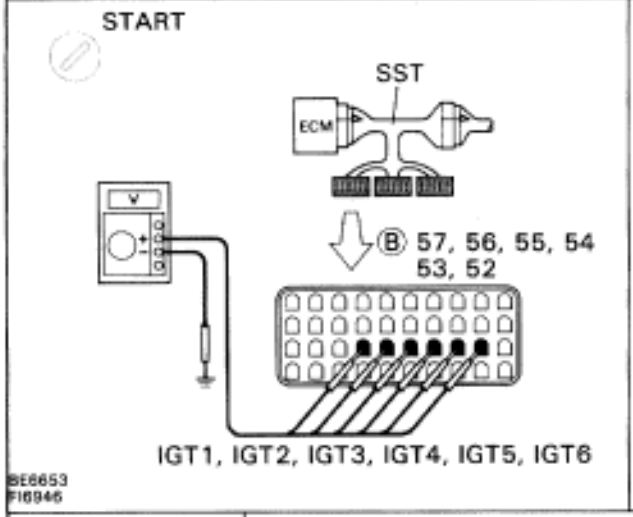

P Disconnect igniter connector.

C Measure voltage between terminal IGT (1 ~ 6) of engine control module connector and body ground when engine is cranked.

OK **Voltage: 0.5 — 1.0 V (Neither 0 V nor 5 V)**

Reference **INSPECTION USING OSCILLOSCOPE**

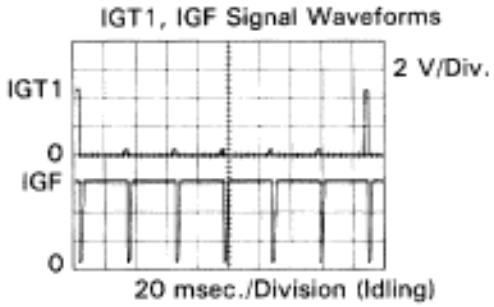

- During idling, check waveforms between terminals IGF1, IGF and E1 of engine control module.

HINT: The correct rectangular waveforms are as shown, IGT2, IGT3, IGT4, IGT5 and IGT6 signal waveforms are same as IGT1 signal waveform.

NG

OK → **Replace igniter.**

9 **Check for open and short in harness and connector in IGT (1 ~ 6) signal circuit between engine control module and igniter (See page IN–30).**

OK

NG → **Repair or replace harness or connector.**

Check and replace engine control module.

DTC 16 A T Control Signal Malfunction

CIRCUIT DESCRIPTION

The signal from the A/T CPU retards the ignition timing of the engine during A/T gear shifting, thus momentarily reducing torque output of the engine for smooth clutch operation inside the transmission and reduced shift shock.

DTC No.	Diagnostic Trouble Code Detecting Condition	Trouble Area
16	Fault in communications between the engine CPU and A/T CPU in the ECM	• ECM

If the ECM detects the diagnostic trouble code ”16” in memory, it prohibits the torque control of the A/T which performs smooth gear shifting.

INSPECTION PROCEDURE

1 **Are there any other codes (besides Code 16) being output?**

YES → **Go to relevant diagnostic trouble code chart.**

NO →

Replace engine control module.

DTC 21 Main Heated Oxygen Sensor Circuit

CIRCUIT DESCRIPTION

To obtain a high purification rate for the CO, HC and NOx components of the exhaust gas, a three–way catalytic converter is used, but for most efficient use of the three–way catalytic converter, the air–fuel ratio must be precisely controlled so that it is always close to the stoichiometric air–fuel ratio.
The oxygen sensor has the characteristic whereby its output voltage changes suddenly in the vicinity of the stoichiometric air–fuel ratio. This characteristic is used to detect the oxygen concentration in the exhaust gas and provide feedback to the computer for control of the air–fuel ratio.
When the air–fuel ratio becomes LEAN, the oxygen concentration in the exhaust increases and the oxygen sensor informs the ECM of the LEAN condition (small electromotive force: 0 V).
When the air–fuel ratio is RICHER than the stoichiometric air–fuel ratio the oxygen concentration in the exhaust gas is reduced and the oxygen sensor informs the ECM of the RICH condition (large electromotive force: 1 V).
The ECm judges by the electromotive force from the oxygen sensor whether the air–fuel ratio if RICH or LEAN and controls the injection duration accordingly. However, if malfunction of the oxygen sensor causes an output of abnormal electromotive force, the ECM is unable to perform accurate air–fuel ratio control.
The main heated oxygen sensor include a heater which heats the Zirconia element. The heater is controlled by the ECM. When the intake air volume is low (the temperature of the exhaust has is low) current flows to the heater to heat the sensor for accurate oxygen concentration detection.)

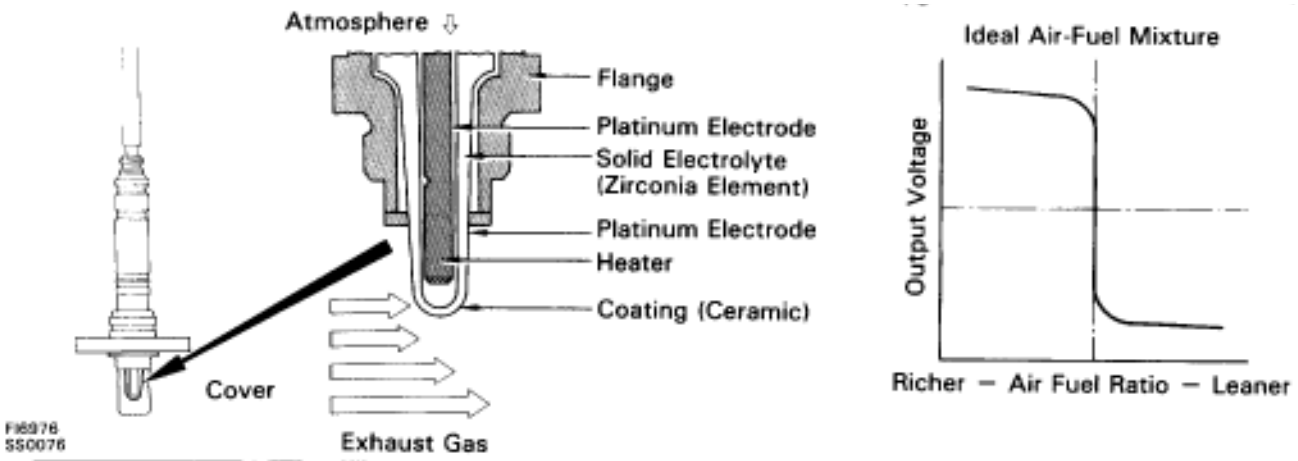

DTC No.	Diagnostic Trouble Code Detecting Condition	Trouble Area
21	(1) Open or short in heater circuit of main heated oxygen sensor for 0.5 sec. or more.	• Open or short in heater circuit of main heated oxygen sensor • Main heated oxygen sensor heater • ECM
	(2) Main heated oxygen sensor signal voltage is reduced to be 0.35 V and 0.70V for 60 sec. under condition (a) ~ (d): (2 trip detection logic)*1 (a) Engine coolant temp.: Between 80°C (176°F) and 95°C (203°F) (b) Engine speed: 1,500 rpm or more (c) Load driving (Example A/T in overdrive (5th for M/T), A/C ON, Flat road, 80 km/h (50 mph)) (d) Main heated oxygen sensor signal voltage: Alternating above and below 0.45V	• Main heated oxygen sensor circuit • Main heated oxygen sensor

*1: See page EG–503.

CIRCUIT DESCRIPTION (Cont'd)

DIAGNOSTIC TROUBLE CODE DETECTION DRIVING PATTERN

Purpose of the driving pattern.

(a) To simulate diagnostic trouble code detecting condition after diagnostic trouble code is recorded.

(b) To check that the malfunction is corrected when the repair is completed confirming that diagnostic trouble code is no longer detected.

Malfunction: Main Heated Oxygen Sensor Deterioration

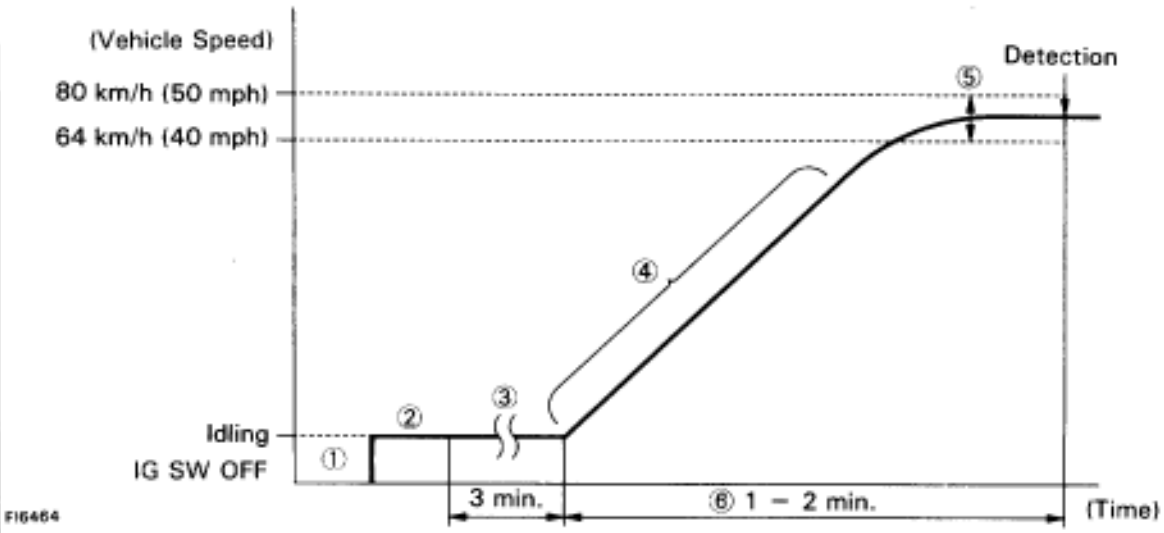

It is vital that this test routine is adhered to detect the malfunction:

(1) Disconnect the EFI No.1 fuse (30 A) for 10 sec. or more, with IG switch OFF. Initiate test mode (Connect terminal TE2 and E1 of data link connector 2 with IG switch OFF).

(2) Start the engine and warm up with all ACC switch OFF.

(3) Idle the engine for 3 min.

(4) Accelerate gradually within the range 1,300 ~ 1,7700 rpm (centered around 1,500 rpm) with the A/C switch ON and D position for A/T (5th for M/T).

HINT:
- Ensure engine rpm does NOT fall below 1200 rpm.
- Gradually depress the accelerator pedal at a suitable rate to comply with the test re–quirements on the above graph.
- Never allow engine rpm to drop at any time during the test.

(5) Maintain the vehicle speed at 64 — 80 km/h (40 — 50 mph).

(6) Keep the vehicle running for — 2 min. after starting acceleration.

HINT: If a malfunction exists, the Malfunction Indicator Lamp will light up after approx. 60 sec. from the start of acceleration.

NOTICE: If the conditions in this test are not strictly followed, detection of the malfunc–tion will not be possible.

WIRING DIAGRAM

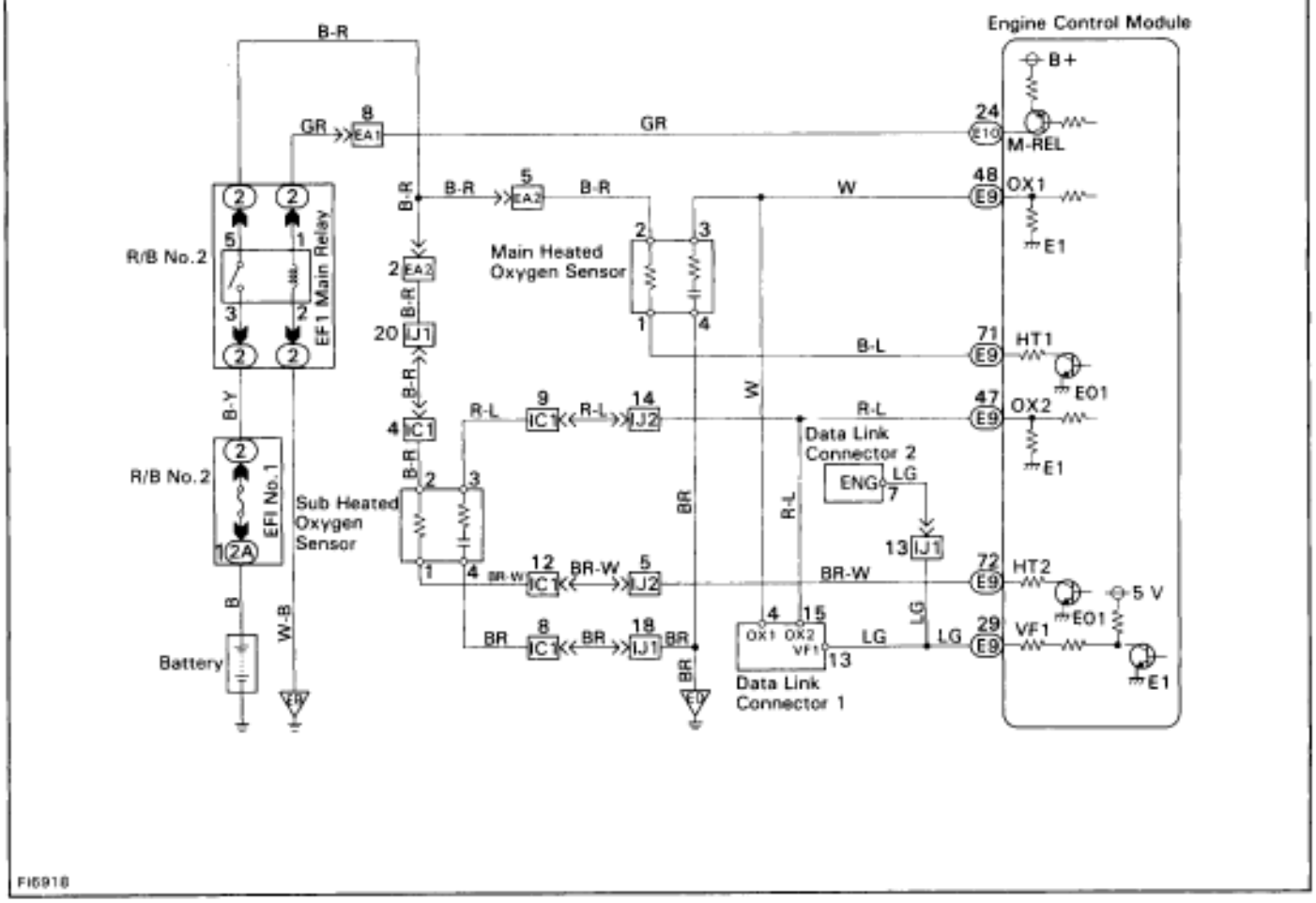

INSPECTION PROCEDURE

1 **Check voltage between terminals HT1 of engine control module connector and body ground.**

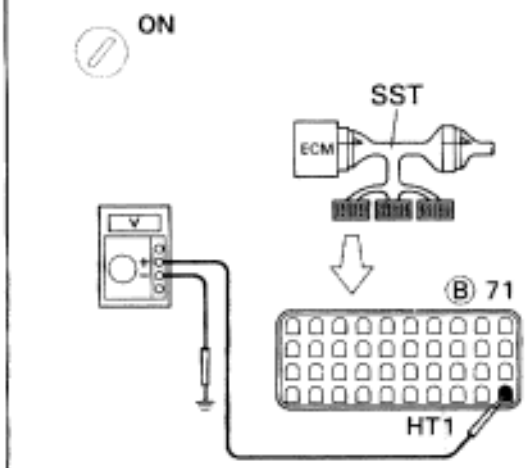

P Connect SST (check harness “A”).
(See page EG–510)
SST 09990–01000

C Measure voltage between terminals HT1 of engine control module connector and body ground.

OK **Voltage: 9 — 14 V**

NG

OK Go to step **3**.

2 Check main heated oxygen sensor heater.

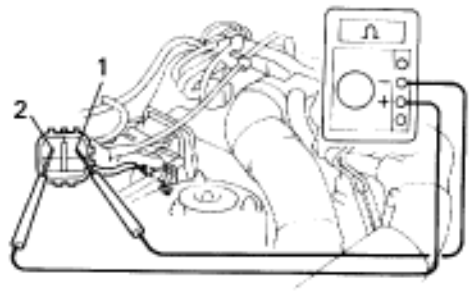

P11993

P Disconnect main heated oxygen sensor connector.

C Measure resistance between terminals 1 and 2 of main heated oxygen sensor connector.

OK **Resistance: 11 — 16 at 20˚C (68˚F)**

OK

NG ⟩ **Replace main heated oxygen sensor.**

Check and repair harness or connector between main relay and main heated oxygen sensor, main heated oxygen sensor and engine control module.

3 Check voltage between terminals HT1 of engine control module connector and body ground.

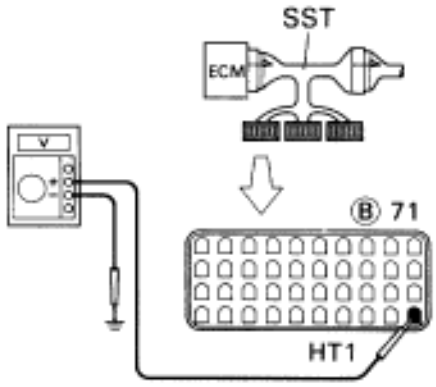

FI6945

P Warm up engine to normal operating temperature.

C Measure voltage between terminals HT1 of engine control module connector and body ground, when engine is idling and racing at 4,000 rpm.

OK

	Voltage
Idling	0 V
Racing at 4,000 rpm	9 – 14 V

Hint In the 4,000 rpm racing check, continue engine racing at 4,000 rpm for approx. 20 seconds or more.

NG

OK ⟩ **Replace main heated oxygen sensor.***

Check and replace engine control module.

*: It is probable the oxygen sensor has deteri–orated. Usually, this cannot be confirmed by visual inspection.

Reference **INSPECTION USING OSCILLOSCOPE**

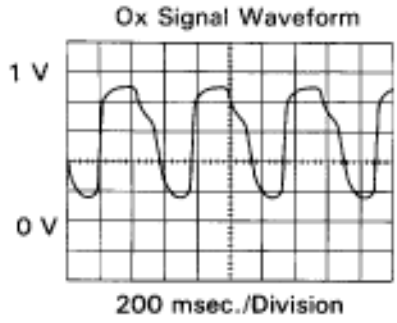

- With the engine racing (4,000 rpm) measure waveform between terminals OX1 and E1 of engine control module.

HINT: The correct waveform is as shown oscillating between approx. 0.1 V and 0.9 V

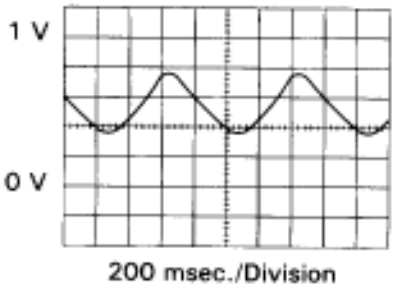

If the oxygen sensor has deteriorated, the amplitude of the voltage will be reduced as shown on the left.

FI6514
FI6515

DTC 22 Engine Coolant Temp. Sensor Circuit

CIRCUIT DESCRIPTION

The engine coolant temperature sensor senses the coolant temperature. A thermistor built in the sensor changes its resistance value according to the coolant temperature. The lower the coolant temperature, the greater the thermistor resistance value, and the higher the coolant temperature, the lower the thermistor resistance value (See Fig. 1).

The engine coolant temperature sensor is connected to the ECM (See wiring diagram). The 5 V power source voltage in the ECM is applied to the engine coolant temperature sensor from the terminal THW via a resistor R. That is, the resistor R and the engine coolant temperature sensor are connected in series. When the resistance value of th engine coolant temperature sensor changes in accordance with changes in the coolant temperature, the potential at the terminal THW also changes. Based on this signal, the ECM increases the fuel injection volume to improve driveability during cold engine operation. If the ECM records the diagnostic trouble code 22, it operates the fail safe function in which the engine coolant temperature is assumed to be 80˚C (176˚F).

(Fig. 1)

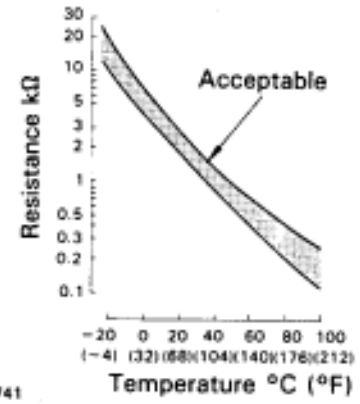

Reference

Engine Coolant Temp. °C (°F)	Resistance (kΩ)	Voltage (V)
−20 (−4)	15.0	4.2
0 (32)	5.7	3.4
20 (68)	2.5	2.4
40 (104)	1.2	1.5
60 (140)	0.6	0.9
80 (176)	0.3	0.5
100 (212)	0.2	0.3

DTC No.	Diagnostic Trouble Code Detecting Condition	Trouble Area
22	Open or short in engine coolant temp. sensor circuit for 0.5 sec. or more	• Open or short in engine coolant temp. sensor circuit • Engine coolant temp. sensor • ECM

WIRING DIAGRAM

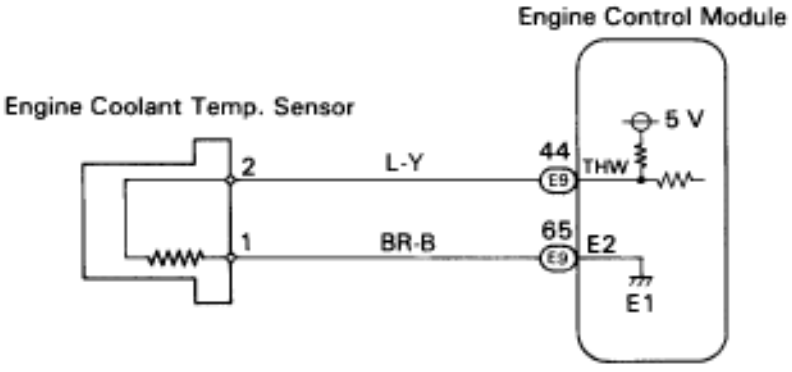

INSPECTION PROCEDURE

HINT: If diagnostic trouble codes ”22” (engine coolant temperature sensor circuit), ”24” (intake air temperature sensor circuit) and ”41” (throttle position sensor circuit) are output simultaneously, E2 (sensor ground) may be open.

1 Check voltage between terminals THW and E2 of engine control module connector.

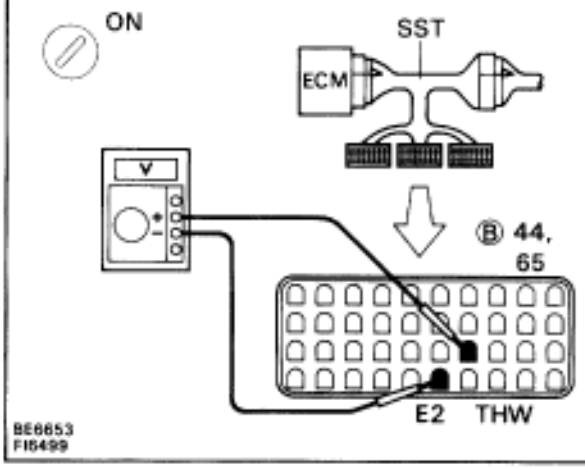

P (1) Connect SST (check harness “A”). (See page EG–510)
(2) Turn ignition switch ON

C Measure voltage between terminals THW and E2 of engine control module connector.

OK

Engine Coolant Temp. °C (°F)	Voltage
20 (68) (Engine is cool)	0.5 ~ 3.4 V
80 (176) (Engine is hot)	0.2 ~ 1.0 V

NG

OK → **Check for intermittent problems. (See page EG–505)**

2 Check engine coolant temp. sensor.

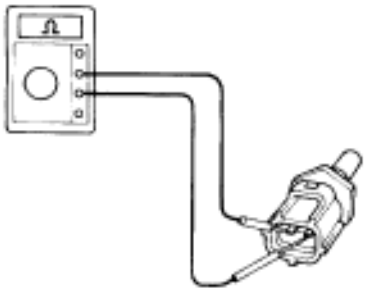

P Disconnect the engine coolant temp. sensor connector.

C Measure resistance between terminals.

OK **Resistance is within Acceptale Zone on chart.**

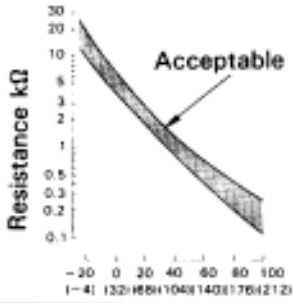

Engine Coolant Temp. °C (°F)	Resistance
20 (68)	2 – 3 kΩ
80 (176)	0.2 – 0.4 kΩ

OK

NG → **Replace engine coolant temp. sensor.**

3 Check for open and short in harness and connector between engine control module and engine coolant temp. sensor (See page IN–30).

OK

NG → **Repair or replace harness or connector.**

Check and replace engine control module.

DTC 24 Intake Air Temp. Sensor Circuit

CIRCUIT DESCRIPTION

The intake air temp. sensor is built into the mass air flow meter and senses the intake air temperature. The structure of the sensor and connection to the ECM is the same as in the engine coolant temp. sensor shown on page EG–530.
If the ECM detects the diagnostic trouble code ”24”, it operates the fail safe function in which the intake air temperature is assumed to be 20˚C (68˚F).

DTC No.	Diagnostic Trouble Code Detecting Condition	Trouble Area
24	Open or short in intake air temp. sensor circuit for 0.5 sec. or more	• Open or short in intake air temp. sensor • Circuit • Intake air temp. sensor • ECM

WIRING DIAGRAM

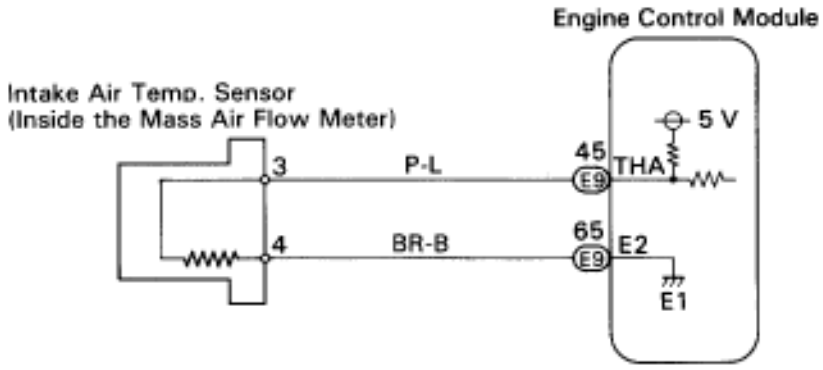

INSPECTION PROCEDURE

HINT: If diagnostic trouble codes ”22” (engine coolant temperature sensor circuit), ”24” (intake air temperature sensor circuit) and ”41” (throttle position sensor circuit) are output simultaneously, E2 (sensor ground) may be open.

1 Check voltage between terminals THA and E2 of engine control module connector.

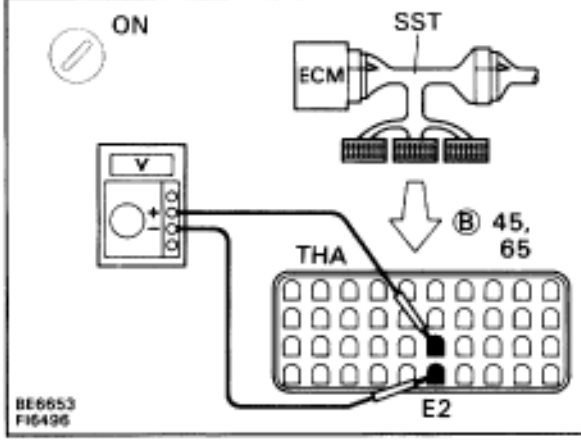

P (1) Connect SST (check harness “A”).
(See page EG–510)
SST 09990–01000
(2) Turn ignition switch ON

C Measure voltage between terminals THW and E2 of engine control module connector.

OK

Intake air temp. °C (°F)	Voltage
20 (68)	0.5 – 3.4 V
60 (140)	0.2 – 1.0 V

NG

OK → **Check for intermittent problems. (See page EG–505)**

2 Check intake air temp. sensor.

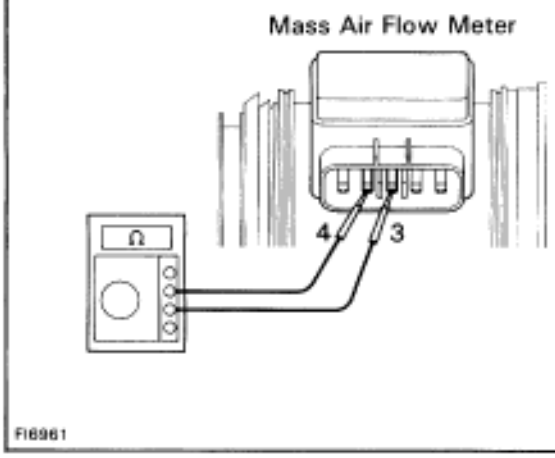

P Disconnect the mass air flow meter connector.

C Measure resistance between terminals 3 and 4 of mass air flow meter connector.

OK **Resistance is within Acceptable Zone on chart.**

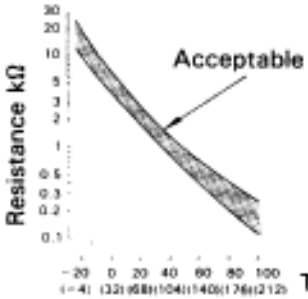

Intake air temp. °C (°F)	Resistance
20 (68)	2 – 3 kΩ
60 (14)	0.4 – 0.7 kΩ

OK

NG → **Replace intake air temp. sensor (Replace mass air flow meter).**

3 Check for open and short in harness and connector between engine control module and intake air temp. sensor (See page IN–30)

OK

NG → **Repair or replace harness or connector.**

Check and replace engine control module.

DTC 25 26 Air–Fuel Ratio Lean Rich Malfunction

CIRCUIT DESCRIPTION

See EG–525 for the circuit description.

DTC No.	Diagnostic Trouble Code Detecting Condition	Trouble Area
25	(1) Main heated oxygen sensor voltage is 0.45 V or less (lean) for 90 sec. under conditions (a) and (b): (2 trip detection logic)*2 (a) Engine coolant temp.: 70˚C (158˚F) or more (b) Engine speed: 1,500 rpm or more	• Open or short in main heated oxygen sensor circuit • Main heated oxygen sensor • Ignition system • ECM
	(2) Engine speed varies by more than 20 rpm over the preceding crank angle period during a period of 25 sec. or more under conditions (a) and (b): (2 trip detection logic).* (a) Engine speed: Below 950 rpm (b) Engine coolant temp.: 80˚C (176˚F) or more	• Open and short in injector circuit • Fuel line pressure (injector leak, blockage) • Mechanical system malfunction (skipping teeth of timing belt) • Ignition system • Compression pressure (foreign object caught in valve) • Mass air flow meter (air intake) • ECM
26	Engine speed varies by more than 20 rpm over The preceding crank angle period during a Period of 25 sec. or more under conditions (a) And (b): (2 trip detection logic).* (a) Engine speed: Below 950 rpm (b) Engine coolant temp.: 80˚C (176˚F) or more	• Open and short in injector circuit • Fuel line pressure (injector leak, blockage) • Mechanical system malfunction (skipping teeth of timing belt) • Ignition system • Compression pressure (foreign object caught in valve) • Mass air flow meter (air intake) • ECM

*: See page EG–503.

CIRCUIT DESCRIPTION (Cont'd)

DIAGNOSTIC TROUBLE CODE DETECTION DRIVING PATTERN

Purpose of the driving pattern.

(a) To simulate diagnostic trouble code detecting condition after diagnostic trouble code is recorded.

(b) To check that the malfunction is corrected when the repair is completed confirming that diagnostic trouble code is no longer detected.

Malfunction: Open or Short in Main Heated Oxygen Sensor

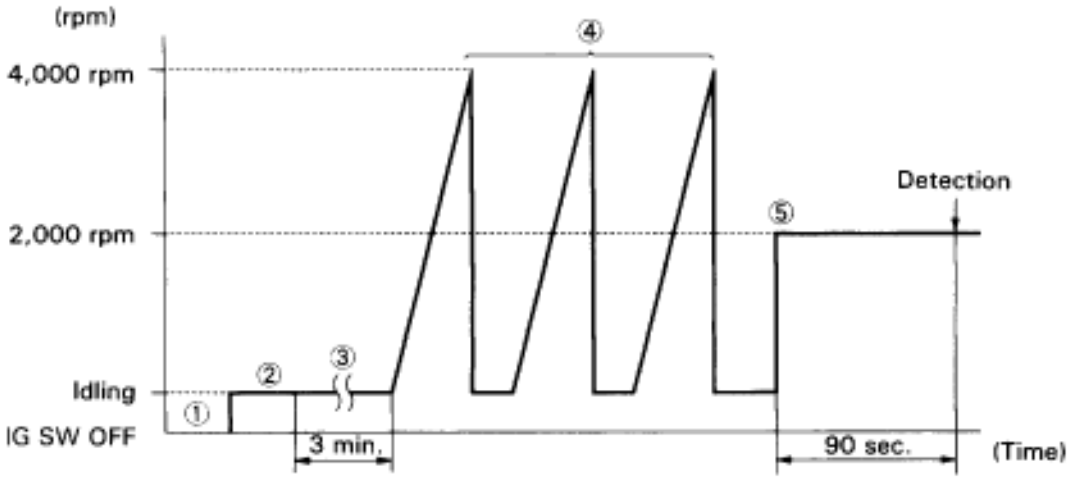

FI8465

HINT: Before this test, check the feedback voltage for oxygen sensor.

(1) Disconnect the EFI No.1 fuse (30A) for 10 sec. or more, with IG switch OFF. Initiate test mode (Connect terminal TE2 and E1 of data link connector 2 with IG switch OFF).
(2) Start the engine and warm up.
(3) Idle the engine for 3 min.
(4) Race the engine quickly to 4,000 rpm 3 times using the accelerator pedal.
(5) Race the engine at 2,000 rpm for 90 sec.

HINT: If a malfunction exists, the malfunction indicator lamp will light up during step (4).

NOTICE: If the conditions in this test are not strictly followed, detection of the malfunction will not be possible.

CIRCUIT DESCRIPTION (Cont'd)

DIAGNOSTIC TROUBLE CODE DETECTION DRIVING PATTERN

Purpose of the driving pattern.

(a) To simulate diagnostic trouble code detecting condition after diagnostic trouble code is recorded.

(b) To check that the malfunction is corrected when the repair is completed confirming that diagnostic trouble code is no longer detected.

Malfunction: Open or Short in Injector circuit, Injector Leak or Blockage

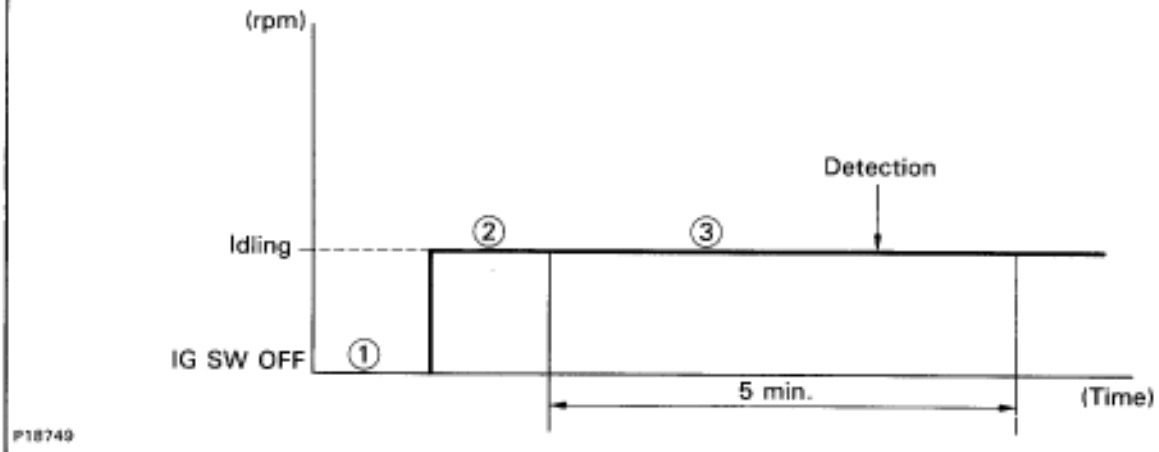

(1) Disconnect the EFI No.1 fuse (30A) for 10 sec. or more, with IG switch OFF.
Initiate test mode (Connect terminal TE2 and E1 of data link connector 2 with IG switch OFF).

(2) Start the engine and warm up with all ACC switched OFF.

(3) Idle the engine for 5 min.
(After the entine is started, do not depress the accelertor pedal.)

HINT: If a malfunction exists, the malfunction indicator lamp will light up during the 5 min. idling period.

NOTICE: If the conditions in this test are not strictly followed, detection of the malfunction will not be possible.

WIRING DIAGRAM

See page EG–527 for the WIRING DIAGRAM

INSPECTION PROCEDURE

1 Check voltage between terminals VF1 and E1 of data link connector .

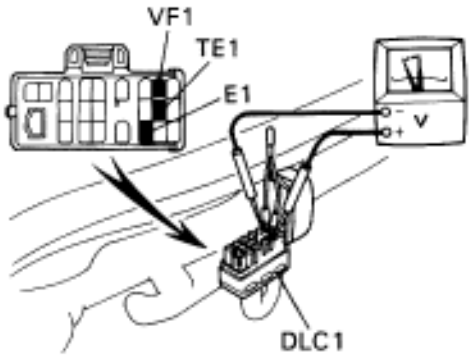

P11364

P (1) Warm up engine to normal operating tempera–ture.
(2) Connect terminals TE1 and E1 of data link connector 1.
(3) Connect positive probe to terminal VF1 and negative probe to terminal E1 of data link connector 1.

C (1) warm up the oxygen sensor by racing engine at 2,500 rpm for about 2 minutes.
(2) Then, still maintaining engine at 2,500 rpm, count how many times voltmeter fluctuates need between 0 and 5 V.

Result

Result	
Needle fluctuates 8 times or more for every ten seconds	OK
Continue at 0 V	NG Type I
Continue at 5 V	NG Type II

NG Type I

NG Type II → Go to step 7.

2 Check voltage between terminals OX1 and E1 data link connector 1.

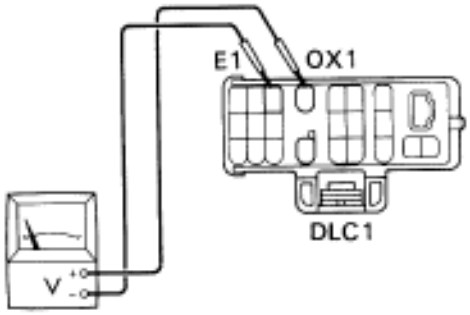

FI6652

P Warm up engine to normal operating temperature.

C Measure voltage between terminals OX1 and E1 of data link connector 1 when engine is suddenly raced to full throttle.

OK **The voltage should be 0.5 V or higher at least once.**

Hint Inspection should not take linger than 1 second.

NG

OK → Go to step 7.

3 **Check for open and short in harness and connector between engine control module and main heated oxygen sensor, engine control module and data link connector 1 (See page IN–30).**

OK → NG: **Repair or replace harness or connector.**

4 **Check each item found to be a possible cause of problem.**

Check each circuit found to be a possible cause of trouble according to the results of the check in 1 or 2 . The numbers int he table below show the order in which the checks should be done.

Main heater oxygen sensor signal continues at 0 V	Possible Cause	See page
1	Faulty sensor installation	–
2	Air leakage	EG–261
3	Misfire	IG–21
4	Fuel system	EG–568
5	Injector circuit	EG–583
6	Characteristics deviation in engine coolant temp. sensor	EG–530
7	Characteristics deviation in intake air temp. sensor	EG–532
8	Characteristics deviation in mass air flow meter	EG–544
9	Valve timing	EG–33

OK → NG: **Repair or replace.**

5 **Check compression (See page EG–9).**

OK → NG: **Repair or replace.**

6 **Does malfunction disappear when a good main heated oxygen sensor is installed?**

NG → YES: **Replace main heated oxygen sensor.**

Check and replace engine control module.

7 **Check each item found to be a possible cause of problem.**

Check each circuit found to be a possible cause of trouble according to the results of the check in 1 . The numbers int he table below show the order in which the checks should be done.

Main heater oxygen sensor signal continues at 5.0 V	Main heater oxygen sensor signal is normal	Possible Cause	See page
2	7	Injector circuit	EG–583
	3	Misfire	IG–21
6	4	Valve timing	EG–33
	1	Air leakage	EG–261
1	2	Fuel system	EG–568
5	8	Characteristics deviation in mass air flow meter	EG–544
3	5	Characteristics deviation in engine coolant temp. sensor	EG–530
4	6	Characteristics deviation in intake air temp. sensor	EG–532

OK

NG → **Repair or replace.**

8 **Check compression (See page EG–9).**

OK

NG → **Repair or replace.**

9 **Does malfunction disappear when a good main heated oxygen sensor is installed?**

NG

YES → **Repair main heated oxygen sensor.**

Check and replace engine control module.

DTC 27 Sub Heated Oxygen Sensor Circuit

CIRCUIT DESCRIPTION

The sub heated oxygen sensor is installed on the exhaust pipe. Its construction and operation is the same as the main heated oxygen sensor on page EG–525.

DTC No.	Diagnostic Trouble Code Detecting Condition	Trouble Area
27	(1) Open or short in heater circuit of sub heated oxygen sensor for 0.5 sec. or more	• Open or short in heater circuit of sub heated oxygen sensor • Sub heated oxygen sensor heater • ECM
	(2) Main heated oxygen sensor signal is 0.45 V or more and sub heated oxygen sensor signal is 0.45 V or less under conditions (a) ~ (c): (2 trip detection logic).* (a) Engine coolant temp.: 80°C (176°F) or more (b) Engine speed: 1,500 rpm or more (c) Accel. pedal: Fully depressed for 2 sec. or more	• Open or short in sub heated oxygen sensor circuit • Sub heated oxygen sensor • ECM

*: See page EG–503.

CIRCUIT DESCRIPTION (Cont'd)

DIAGNOSTIC TROUBLE CODE DETECTION DRIVING PATTERN

Purpose of the driving pattern.
(a) To simulate diagnostic trouble code detecting condition after diagnostic trouble code is recorded.
(b) To check that the malfunction is corrected when the repair is completed confirming that diagnostic trouble code is no longer detected.

Malfunction: Open or Short in Sub Heated Oxygen Sensor

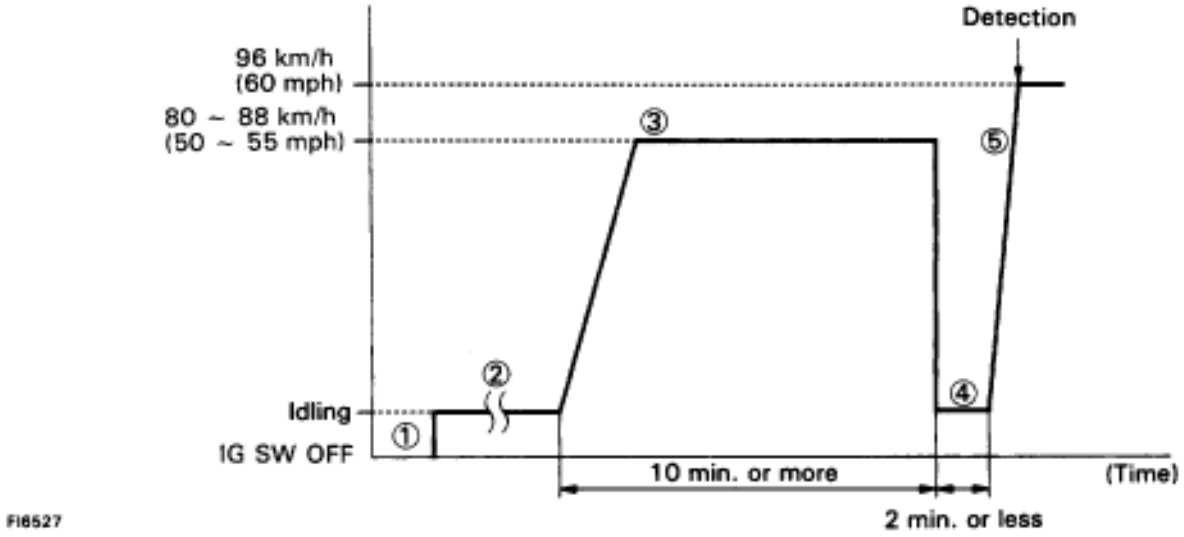

(1) Disconnect the EFI No.1 fuse (30A) for 10 sec. or more, with IG switch OFF. Initiate test mode (Connect terminal TE2 and E1 of data link connector 2 with IG switch OFF).
(2) Start the engine and warm up with all ACC switched OFF.
(3) Drive the vehicle at 80 ~ 88 km/h (50 ~ 55 mph) for 10 min. or more.
(4) Stop at a safe place and idle the engine for 2 min. or less.
(5) Accelerate to 96 km/h (60 mph) with the throttle valve fully open.

HINT: If a malfunction exists, the malfunction indicator lamp will light up during step (5).

NOTICE: If the conditions in this test are not strictly followed, detection of the malfunction will not be possible.

WIRING DIAGRAM

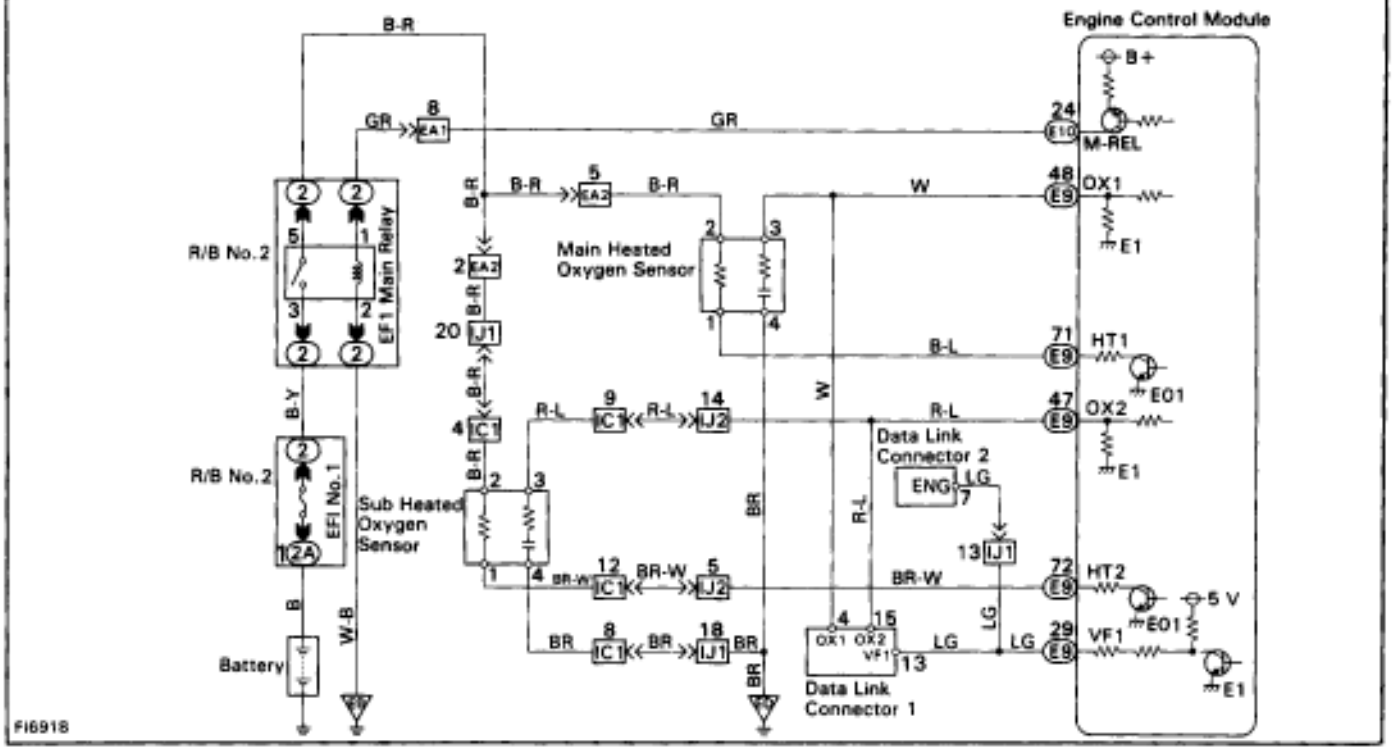

INSPECTION PROCEDURE

HINT: When other codes are output in addition to 27 at the same time, check the circuits for other codes first.

1 **Check voltage between terminal HT2 of engine control module connector and body ground.**

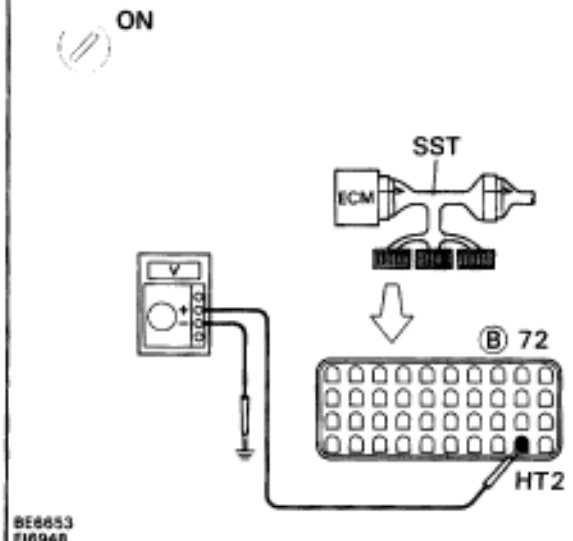

P (1) Connect SST (check harness “A”).
(See page EG–510)
SST 09990–01000
(2) Turn ignition switch ON.

C Measure voltage between terminal HT2 of engine control module connector and body ground.

OK **Voltage: 9 — 14 V**

NG

OK → Go to step 4.

2 Check sub heated oxyten sensor heater.

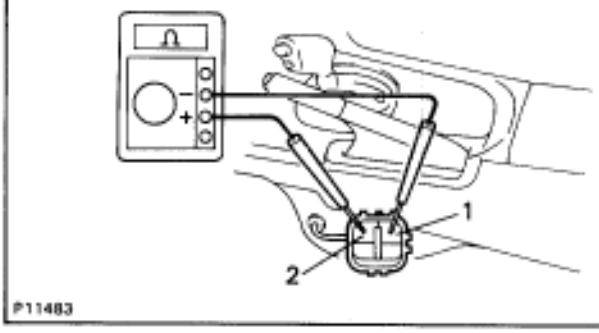

P Disconnect sub heated oxygen sensor connector. (See page EG–321)

C Measure resistance between terminals 1 and 2 of sub heated oxygen sensor connector.

OK **Resistance: 11 — 16 at 20˚C (68˚F)**

OK

NG **Replace sub heated oxygen sensor.**

3 Check for open and short in harness and connector between EFI main replay and engine control module (See page IN–30).

OK

NG **Repair or replace harness or connector.**

Check and replace engine control module.

4 Check voltage between terminal HT2 of engine control module connector and body ground.

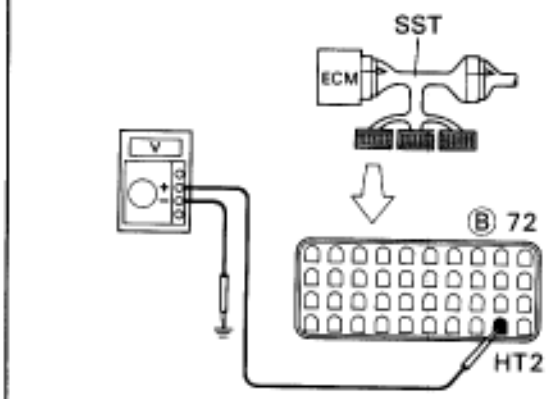

P Warm up engine to normal operating temperature.

C Measure voltage between terminal HT2 of engine control module connector and body ground, when engine is idling and racing at 3,500 rpm.

OK

	Voltage
Idling	0 V
Racing at 3,500 rpm	9 — 14 V

NG

OK **Replace sub heated oxygen sensor.***

Check and replace engine control module.

*: It is probable the oxygen sensor has deteri–orated.
Usually, this cannot be confirmed by visual inspection.

DTC 31 Mass Air Flow Meter Circuit

CIRCUIT DESCRIPTION

The mass air flow meter is an air flow meter which uses a platinum hot wire. The hot wire air flow meter works on the principle that when the electrically heated platinum hot wire is positioned inside the intake air bypass, the intake air volume can be calculated according to the change in the hot wire temperature. This change in temperature is measured by the thermistor at the rear of the hot wire. And feedback from the circuit maintains the hot wire at a set temperature by controlling the current flowing through the hot wire. This current flow is then measured as the output voltage of the air flow meter. The circuit is constructed so that the platinum hot wire and the thermistor provide a bridge circuit, with the power transistor controlled so that the potential of (A) or (B) remains equal to maintain the set temperature.

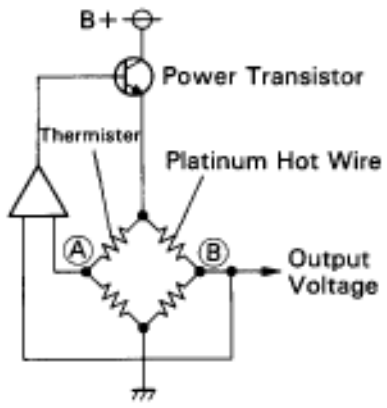

FI6929

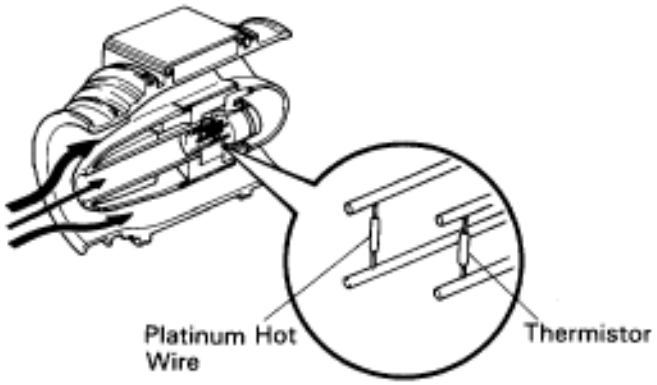

FI6972

DTC No.	Diagnostic Trouble Code Detecting Condition	Trouble Area
31	Open or short in mass air flow meter circuit for 3 sec. or more with engine speed less than 3,000 rpm	• Open or short in mass air flow master circuit • Mass air flow meter • ECM

If the ECM detects diagnostic trouble code “31”, it operates the fail safe function whereby the turbo pressure sensor is used, making it possible to continue to drive the vehicle.

WIRING DIAGRAM

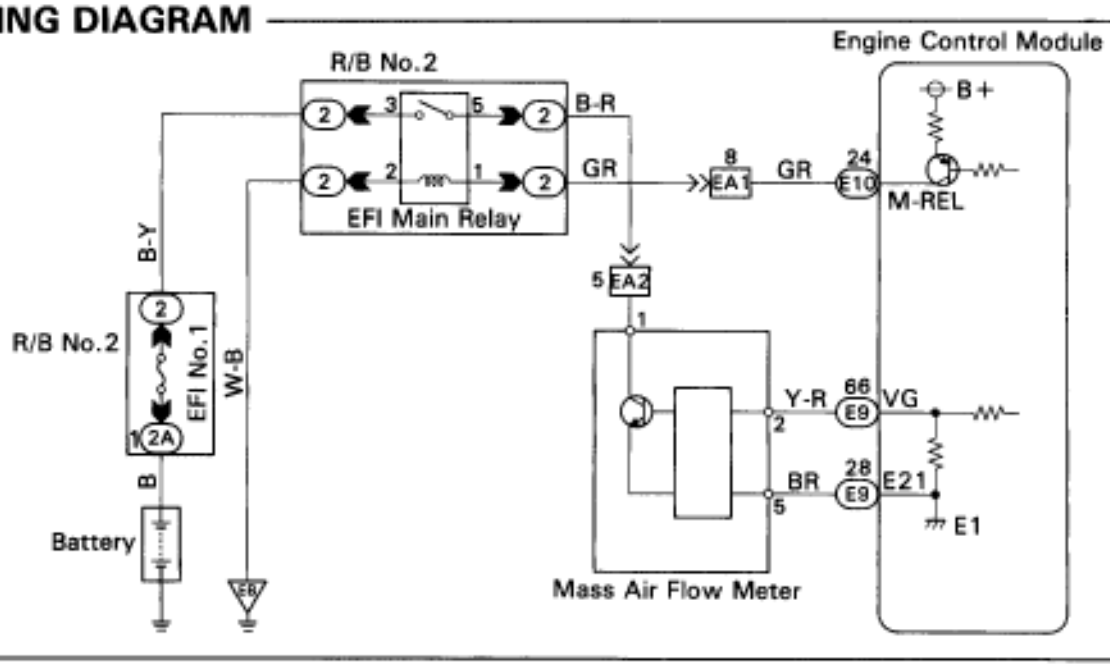

F16930

INSPECTION PROCEDURE

1 Check voltage between terminals VG and E21 of engine control module connector.

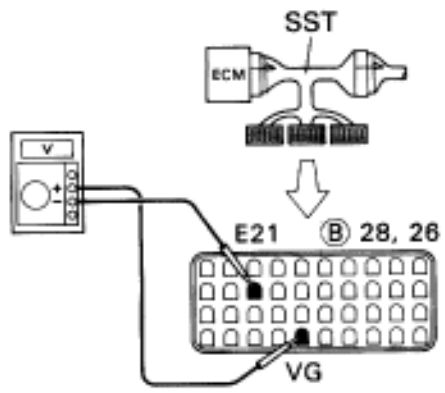

P (1) Connect SST (check harness “A”).
(See page EG–510)
SST 09990–01000
(2) Start engine.

C Measure voltage between terminals VG and E21 of engine control module connector while engine rpm at idling.

OK **Voltage: 0.7 — 1.7 V**

NG

OK → **Check and replace engine control module**

2 Check voltage between terminal 1 of mass air flow meter connector and body ground.

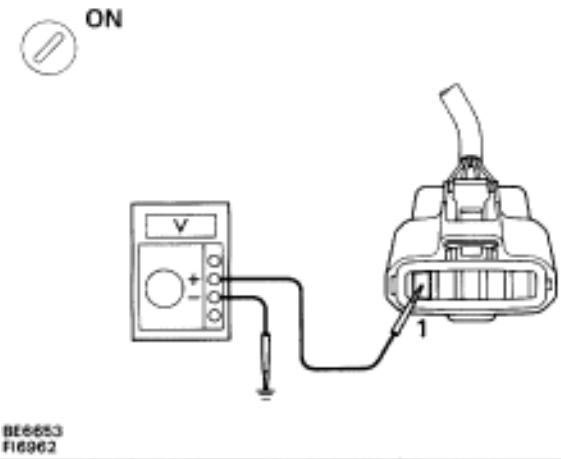

P (1) Disconnect the mass air flow meter connector.
(2) Turn ignition switch ON.

C Measure voltage between terminal 1 of mass air flow meter connector and body ground.

OK **Voltage: 9 — 14 V**

OK

NG → **Check and repair mass air flow meter power source circuit.**

3 Check for open and short in harness and connector between engine control module and mass air flow meter (See page IN–30).

OK

NG → **Repair or replace harness or connector.**

Replace mass air flow meter.

DTC 34 Turbo Pressure Malfunction

CIRCUIT DESCRIPTION

To control maximum turbocharging pressure the turbocharger system includes a waste gate valve controlled by an actuator. The actuator is controlled by the manifold pressure which is duty controlled by the VSV based on signals from the ECM.
If the ECM detects the below diagnosis conditions, it operates the fail safe function in which the ECM stops fuel injection.

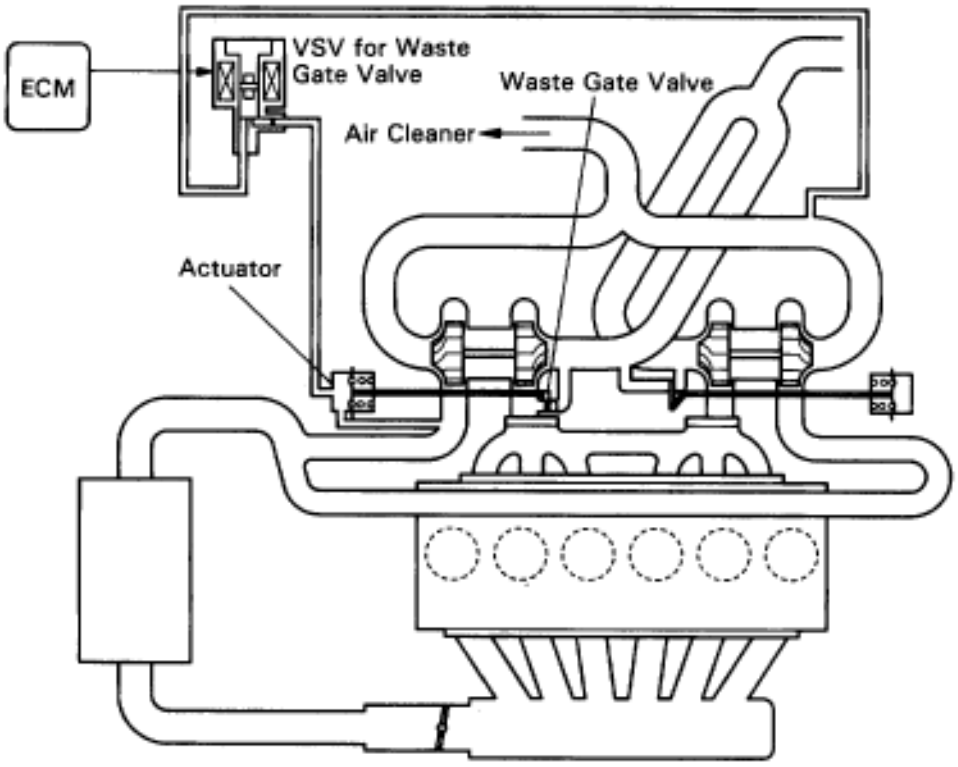

FI6974

DTC No.	Diagnostic Trouble Code Detecting Condition	Trouble Area
34	All conditions below are detected continuously for 2 sec. or more: (a) Manifold absolute pressure: 200 kPa (2.0 kgf/cm^2, 29 psi) or more (b) Throttle valve opening angle: 20° or more (c) Engine speed: 2,400 rpm or more	• Actuator (for waste gate valve) • Short in VSV for waste gate valve circuit • ECM

WIRING DIAGRAM

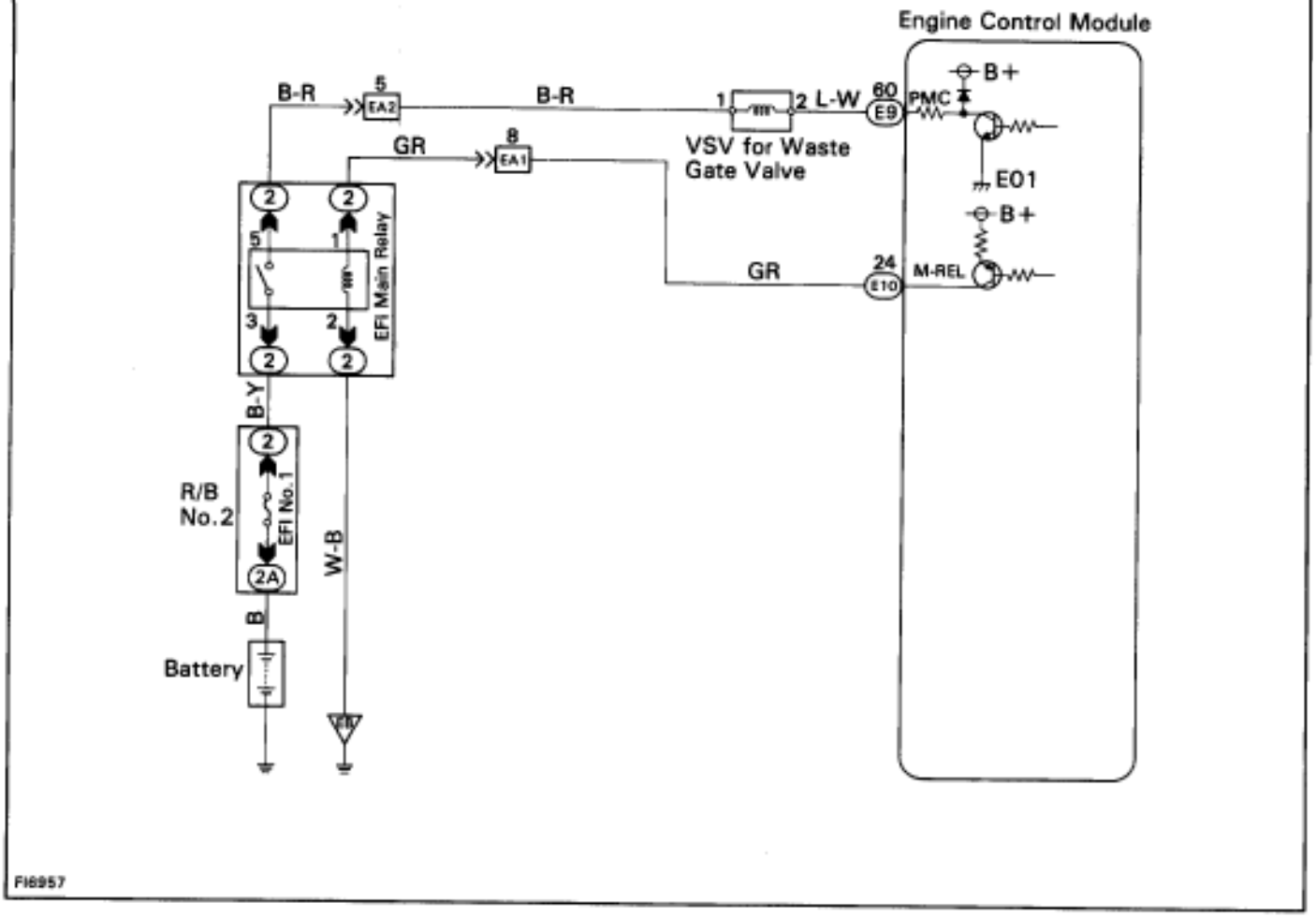

INSPECTION PROCEDURE

1 Check operation of actuator.

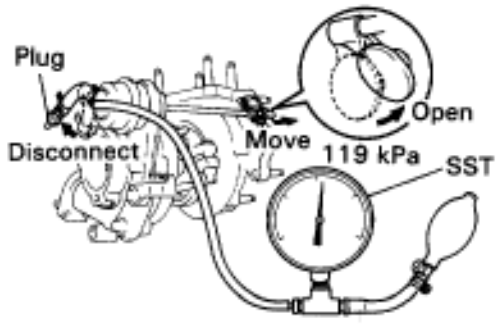

P
(1) Check actuator hose connection.
(2) Disconnect actuator hose.
(3) Using SST, apply pressure to the actuator.
SST 09992–00241

C
Waste gate valve operate smoothly.

OK
Operation pressure:
119 kpa (1.2 kgf/cm^2, 17.3 psi) or less

OK

NG
Replace actuator.

2 Check operation of VSV for waste gate valve.

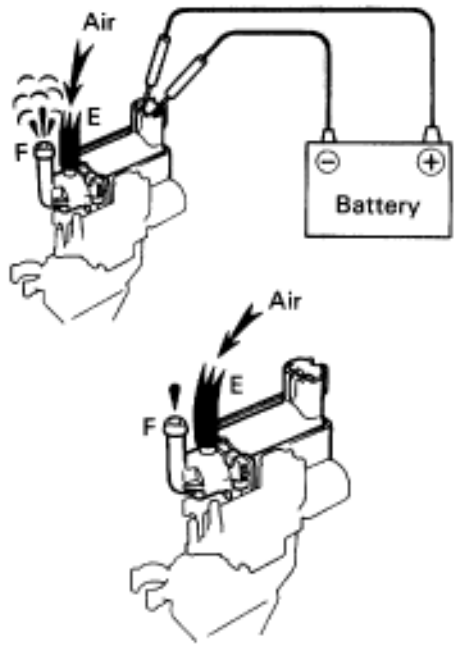

P (1) Remove VSV.
(2) Disconnect VSV connector.

C Check operation of VSV for waste gate valve when battery positive voltage is applied and released to the VSV terminals.

OK **Battery positivie voltage is applied:**
Air from port E is flowing out through port F.
Battery positive voltage is applied:
Closed air passage from E to F.

OK

NG **Replace VSV for waste gate valve.**

3 Check voltage terminals PMC of engine control module connector and body ground.

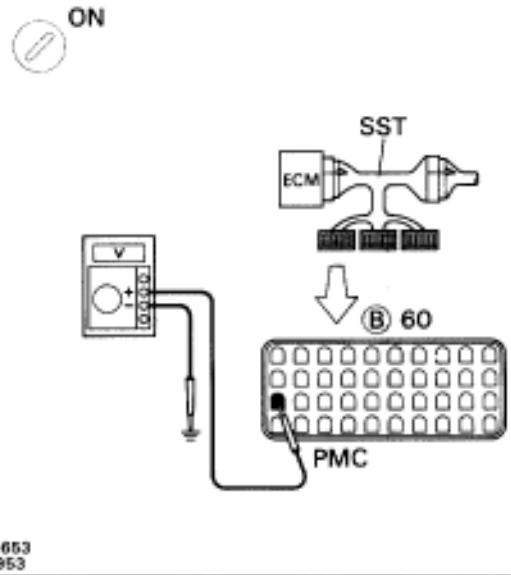

P (1) Connect SST (check harness “A”).
(See page EG–510)
SST 09990–01000
(2) Turn ignition switch ON.

C Measure voltage between terminals PMC of engine control module and ground.

OK **Voltage: 9 — 14 V**

OK

NG **Check and repair harness and connector between VSV for waste gate valve and engine control module.**

Check and replace enginie control module.

DTC 35 Turbo Pressure Sensor Circuit Barometric Pressure (BARO) Sensor Circuit

CIRCUIT DESCRIPTION

HINT DTC 35 is used to indicate malfunctions in the turbo pressure sensor circuit or BARO sensor circuit.

1. TURBO PRESSURE SENSOR

This sensor detects the air intake chamber pressure and converts the pressure reading into a voltage which is used to control the turbo pressure by the ECM.
If the ECM detects the below diagnosis conditions, it operates the fail safe function in which the ECM stops fuel injection at engine speed 2,400 rpm or more and throttle opening angle 20° or more.

DTC No.	Circuit	Diagnostic Trouble Code Detecting Condition	Trouble Area
35	Turbo Pressure Sensor	Open or short in turbo pressure sensor circuit for 0.5 sec. or more	• Open or short in turbo pressure sensor circuit • Turbo pressure sensor • ECM

2. BARO SENSOR

This sensor is built into the ECM. It is used to detect the atmospheric (absolute) pressure and outputs corresponding electrical signals. Fluctuations in the air pressure cause changes in the intake air density which can cause deviations in the air–fuel ratio. The signals from BARO sensor are used to make corrections for the fluctuations. If the ECM detects the below diagnosis conditions, it operates the fail safe function in which the atmospheric pressure is assumed to be 101.3 kPa (1.03 kgf/cm^2, 14.7 psi).

DTC No.	Circuit	Diagnostic Trouble Code Detecting Condition	Trouble Area
35	BARO Sensor	Open or short in BARO sensor circuit for 0.5 sec. or more	• ECM

WIRING DIAGRAM

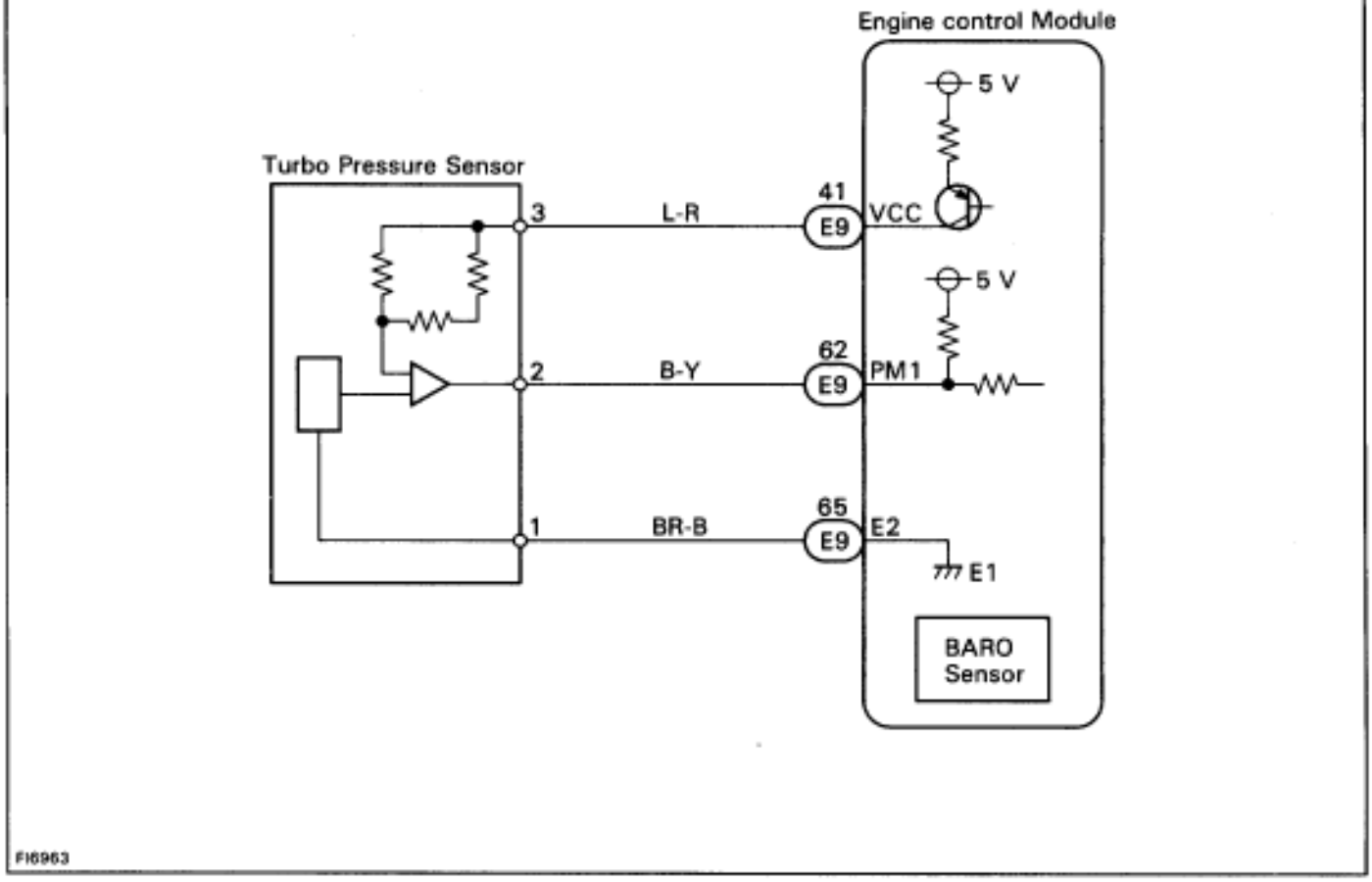

INSPECTION PROCEDURE

HINT: DTC 35 indicates trouble in the BARO sensor circuit or turbo pressure sensor circuit. Because all functions of the BARO sensor circuit are built into the ECM, it is not possible to check this circuit. However, if no problem is found in the turbo pressure sensor circuit, it can be concluded that the problem is in the BARO sensor circuit.

1 Check voltage between terminals VCC and E1 of engine control module connector.

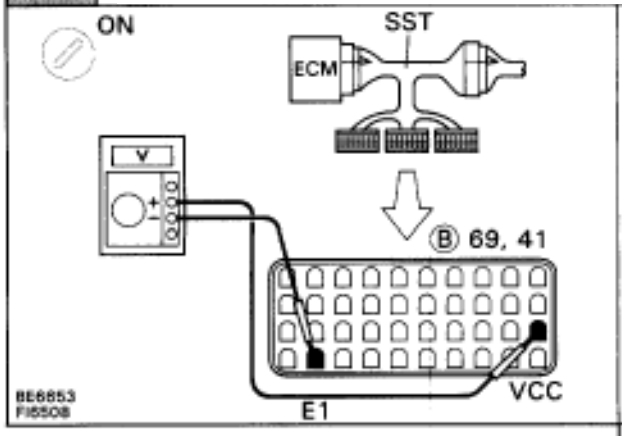

P (1) Connect SST (check harness “A”).
(See page EG–510)
SST 09990–01000
(2) Turn ignition switch ON.

C Measure voltage between terminals VCC and E1 of engine control module.

OK **Voltage: 4.5 — 5.5 V**

OK

NG **Check and replace engine control module.**

2 **Check voltage between terminals PM1 and E2 of engine control module.**

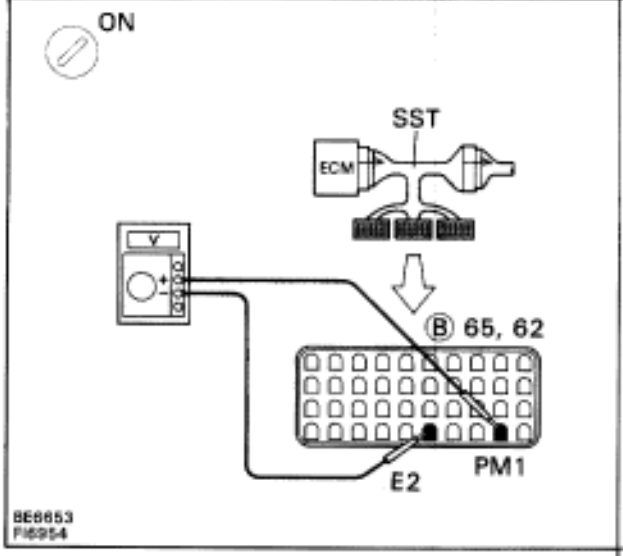

P Turn ignition switch ON.

C Measure voltage between terminals PM1 and E2 of engine control module.

OK **Voltage: 2.3 — 3.0 V**

NG

OK → **Check and replace engine control module.**

3 **Check for open and short in harness and connector between engine control module and turbo pressure sensor (See page IN–30).**

OK

NG → **Repair or replace harness or connector.**

Replace turbo pressure sensor.

DTC 41 47 Throttle Position Sensor(s) Circuit

CIRCUIT DESCRIPTION

The throttle position sensor is mounted in the throttle body and detects the the throttle valve opening angle. When the throttle valve is fully closed, the IDL contacts in the throttle position sensor are on, so the voltage at the terminal IDL of the ECM becomes 0 V. At this time, a voltage of approximately 0.7 V is applied to the terminal VTA of the ECM. When the throttle valve is opened, the IDL contacts go off and thus the power source voltage of approximately 12 V in the ECM is applied to the terminal IDL of the ECM. The voltage applied to the terminal VTA of the ECM increases in the proportion to the opening angle of the throttle valve and becomes approximately 3.2 – 4.9 V when the throttle valve is fully opened. The ECM judges the vehicle driving conditions from these signals input from the terminals VTA and IDL, and uses them as one of the conditions for deciding the air–fuel ratio correction, power increase corrections and fuel–cut control etc. The sub–throttle position sensor is built and operates in the same way as the main throttle position sensor. This sensor is used for traction control. The sub–throttle valve is opened and closed by the sub–throttle actuator according to signals from the TRAC ECU to control the engine output.

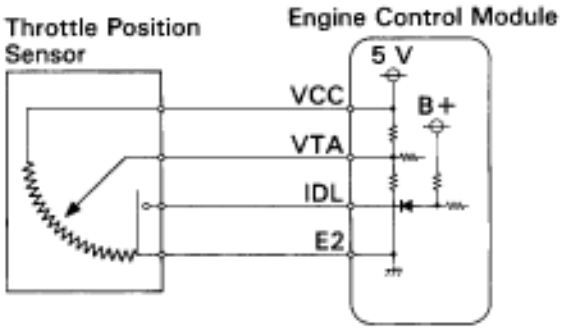

FI6480

DTC No.	Diagnostic Trobule Code Detecting Condition	Trouble Area
41	Open or short in throttle position sensor circuit for 0.5 sec. or more	• Open or short in throttle position sensor circuit • Throttle position sensor • ECM
47	Open or short in sub–throttle position sensor circuit for 0.5 sec. or more	• Open or short in sub–throttle position sensor circuit • Sub–throttle position sensor • ECM

HINT:

Diagnostic trouble code 41 is for the throttle position sensor circuit.
Diagnostic trouble code 47 is for the sub–throttle position sensor circuit.

- When the connector for the throttle position sensor(s) is disconnected, diagnostic trouble code 41 or 47 is not displayed. Diagnostic trouble code 41 or 47 is displayed only when there is an open or short in the VTA signal circuit of the throttle position sensor(s).
- Signals from the throttle position sensor(s) are also input to the TRAC ECU, so when a malfunc–tion occurs on the TRAC side, code 41 or 47 may be displayed.

WIRING DIAGRAM

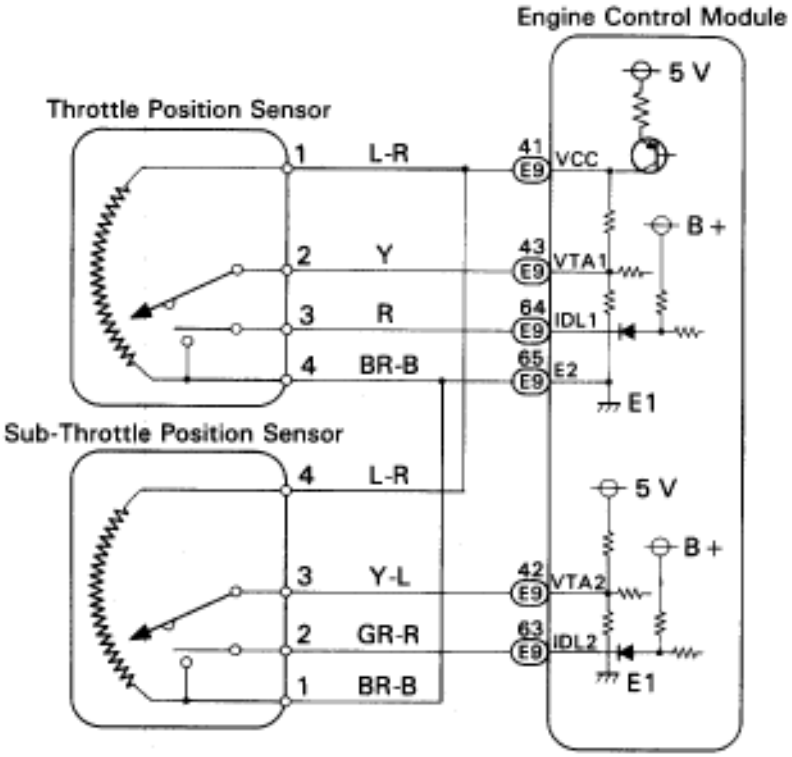

FI6879

INSPECTION PROCEDURE

HINT:

- If diagnostic trouble code 41 is displayed, check throttle position sensor circuit. If diagnostic trouble code 47 is displayed, check sub–throttle position sensor circuit.
- If diagnostic trouble code ”22” (engine coolant temperature sensor circuit), ”24” (intake air temperature sensor circuit) and ”41” (throttle position sensor circuit) are output simultaneously. E2 (sensor ground) may be open.

Check voltage between terminals VTA1, 2, IDL1, 2 and E2 of engine control module connector.

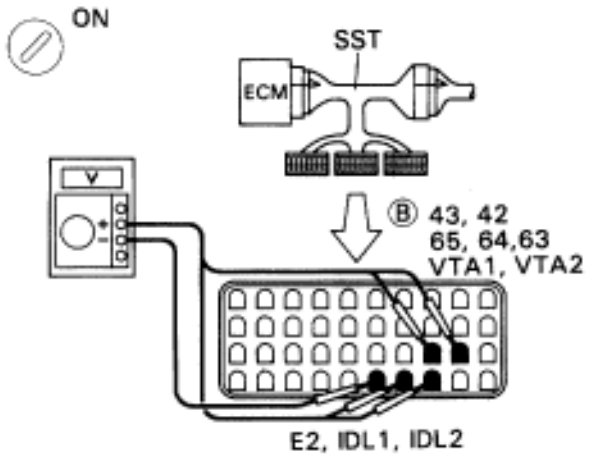

P (1) Connect SST (check harness “A”).
(See page EG–510)
SST 09990–01000
(2) Turn ignition switch ON.
(3) For throttle position sensor, disconnect the vacuum hose from the throttle body, then apply vacuum to the throttle opener.
(See page EG–292)
(4) For sub–throttle position sensor, remove intake air duct and disconnect sub–throttle valve step motor connector.

C Measure voltage between terminals VTA1, 2, IDL1, 2 and E2 of engine control module connector when the (sub–) throttle valve is opened gradually from the closed condition.

OK

Terminal / Throttle Valve	VTA1 – E2 VTA2 – E2	IDL1 – E2 IDL2 – E2
Fully Closed	0.3 – 0.8 V	0 – 3.0 V
Fully Open	3.2 – 4.9 V	9 – 14 V

Hint The voltage should increase steadily in proportion to the throttle valve opening angle.

NG

OK → **Check for intermittent problems.**
(See page EG–505)

2 Check throttle position sensor(s).

For Throttle Position Sensor

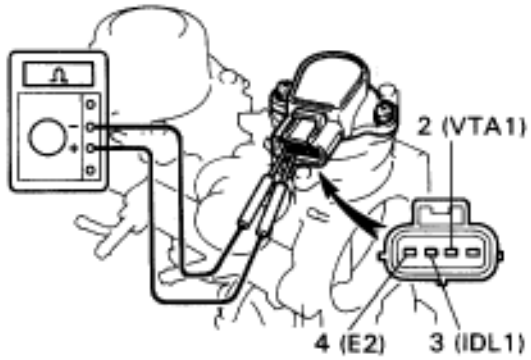

For Sub–Throttle Position Sensor

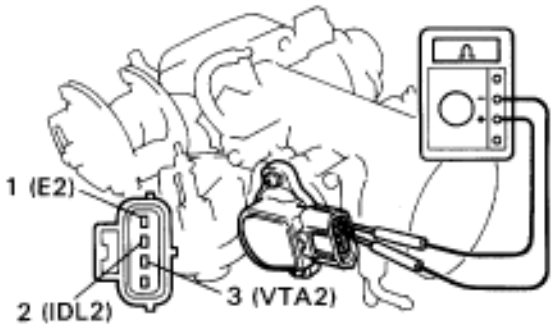

P11452
P12008

P (1) Remove throttle body. (See page EG–291)
(2) For throttle position sensor, apply vacuum to throttle opener. (See page EG–292)

C Measure resistance of each terminal as below table when the throttle valve is opened gradually from the closed condition.

OK

Terminal \ Throttle Valve		Fully Closed	Fully Opened
Throttle Position Sensor	2 (VTA1) – 4 (E2)	0.3 ~ 6.3 kΩ	2.4 ~ 11.2 kΩ
	3 (IDL1) – 4 (E2)	Less than 0.5 kΩ	1 MΩ or higher
Sub throttle Position Sensor	3 (VTA2) – 1 (E2)	0.3 ~ 6.3 kΩ	2.0 ~ 10.8 kΩ
	2 (IDL2) – 1 (E2)	Less than 0.5 kΩ	1 MΩ or higher

Hint Resistance between terminals 2,3 (VTA1,2) and 4,1 (E2) should increase gradually in accordance with the throttle valve opening angle.

OK

NG **Adjust or replace throttle position sensor(s). (See page EG–292)**

3 Check for open and short in harness and connector between engine control module and throttle position sensors(s) (See page IN–30).

OK

NG **Repair or replace harness or connector.**

Check and replace engine control module.

DTC 42 No. 1 Vehicle Speed Sensor Signal Circuit

CIRCUIT DESCRIPTION

The No.1 vehicle speed sensor outputs a 4–pulse signal for every revolution of the rotor shaft, which is rotated by the transmission output shaft via the driven gear. After this signal is converted into a more precise rectangular waveform by the waveform shaping circuit inside the odometer and trip meter, it is then transmitted to the engine control module. The ECM determines the vehicle speed based on the frequency of these pulse signals.

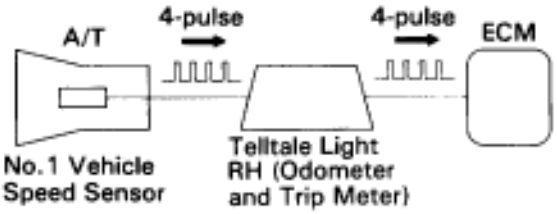

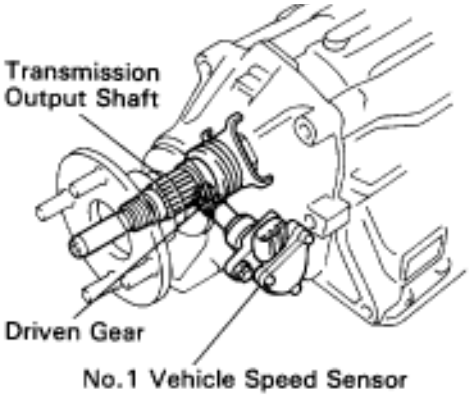

FI8643 Q04361

DTC No.	Diagnostic Trouble Code Detecting Condition	Trouble Area
42	For A/T All conditions below are detected Continuously for 8 sec. or more: (a) No.1 vehicle speed signal: 0 km/h (mph) (b) Engine speed: 3,000 rpm or more (c) Park/neutral position switch: OFF (d) Stop light switch: OFF	• No.1 vehicle speed sensor • Telltale light RH (Odometer and trip meter) • Open or short in No.1 vehicle speed sensor circuit • ECM
	For A/T All conditions below are detected Continuously for 8 sec. or more: (a) No.1 vehicle speed signal: 0 km/h (mph) (b) Engine speed: Between 1,500 rpm and 4,000 rpm (c) Engine coolant temp.: 80˚C (176˚F) or more (d) Load driving	

HINT: In test mode, diagnostic trouble code 42 is output when vehicle speed is 5 km/h (3 mph) or below.

Reference

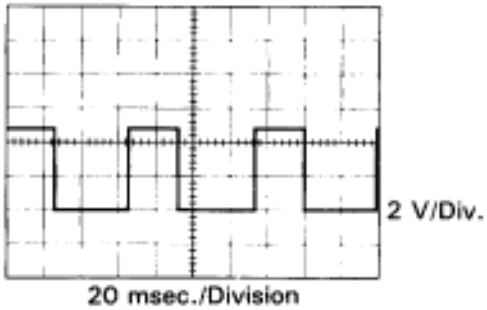

V01496

- Waveform between terminals SP1 and E1 when vehicle speed is approx. 20 km/h (12mph).

HINT: As the vehicle speed increases, the number of signals from SP1 increases.

WIRING DIAGRAM

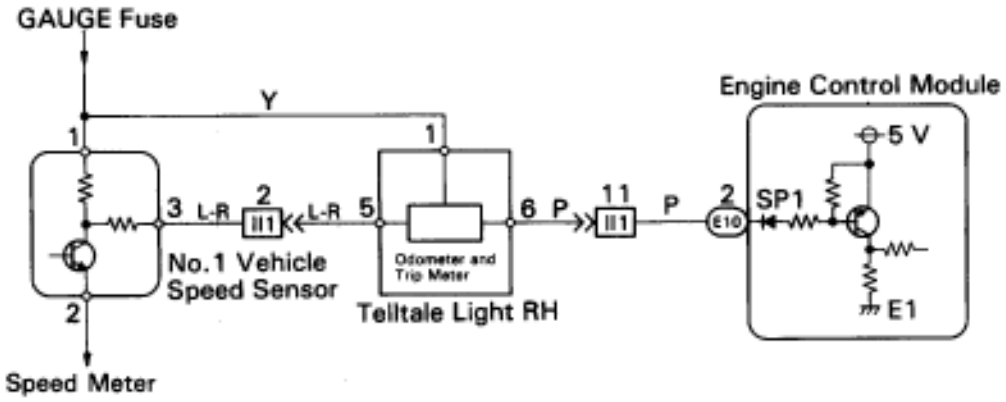

INSPECTION PROCEDURE

1 **Check voltage between terminal SP1 of engine control module connector and body ground.**

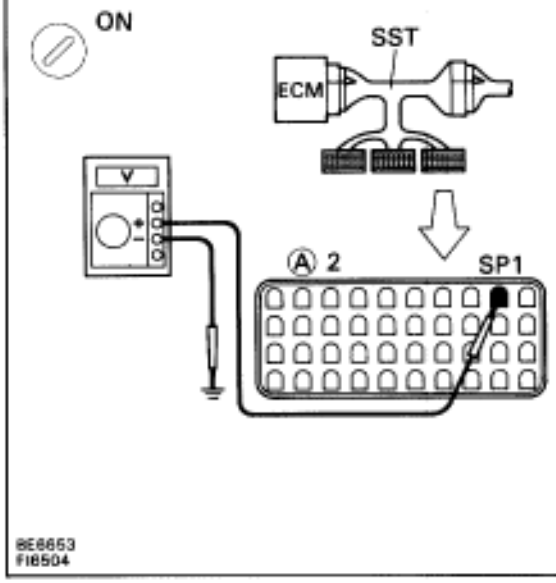

P
(1) Shift the shift lever to N position.
(2) Jack up one of the rear wheels.
(3) Connect SST (check harness “A”). (See page EG–510)
(4) Disconnect power steering ECU connector and cruise control ECU connector.
(5) Turn ignition switch ON.

C
Measure voltage between terminal SP1 of engine control module connector and body ground when the wheel is turned slowly.

OK
Voltage is generated intermittently.

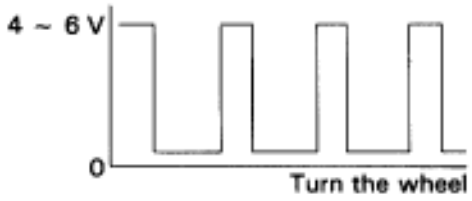

NG

OK → **Check and replace engine control module.**

2 **Check operation of odometer and trip meter (telltale light RH (See page Be–48)).**

NG

OK → **Repair or replace harness or connector between ECM and telltale light RH.**

3 **Check operation of No.1 vehicle speed sensor (See page BE–46).**

NG

OK → **Repair or replace harness or connector between telltale light RH and No.1 vehicle speed sensor.**

Replace No.1 vehicle speed sensor.

DTC 43 Starter Signal Circuit

CIRCUIT DESCRIPTION

When the engine is being cranked, the intake air flow is slow, so fuel vaporization is poor. A rich mixture is therefore necessary in order to achieve good startability. While the engine is being cranked, the battery positive voltage is applied to terminal STA of the ECM. The starter signal is mainly used to increase the fuel injection volume for the starting injection control and after–start injection control.

DTC No.	Diagnostic Trouble Code Detecting Condition	Trouble Area
43	No starter signal to ECM	• Open or short in starter signal circuit • Open or short in ignition switch or starter relay circuit • ECM

WIRING DIAGRAM

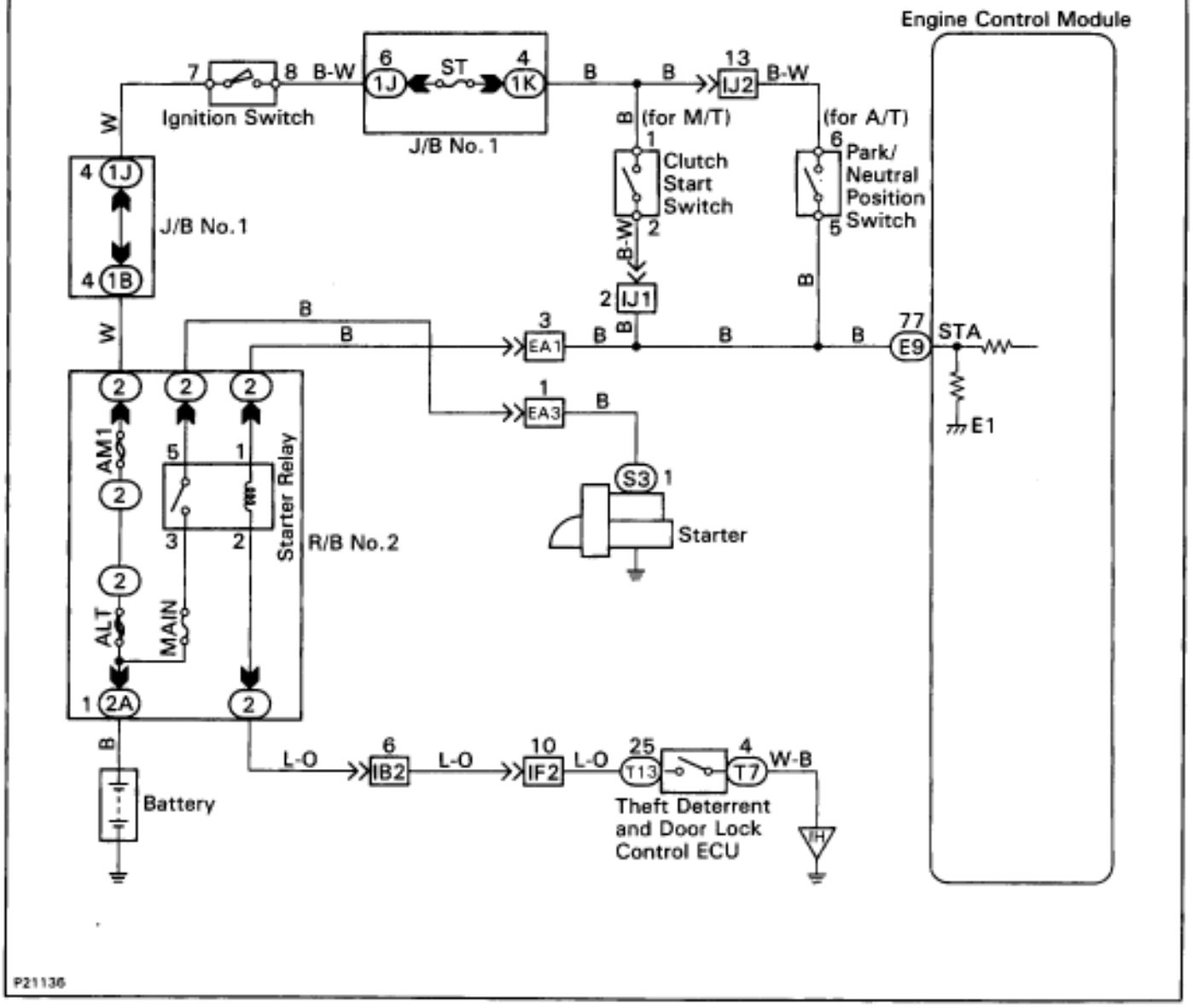

INSPECTION PROCEDURE

HINT: This diagnostic chart is based on the premise that the engine is being cranked under normal conditions. If the engine does not crank, proceed to the matrix chart of problem symptoms on page EG–514.

Check output condition of diagnostic trouble code 43.

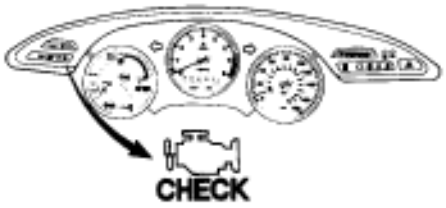

FI6914

P Setting the test mode.
(1) Turn ignition switch OFF.
(2) Connect terminals TE2 and E1 of DLC2.
(3) Turn ignition switch ON.
(Don't start the engine)
(4) Connect terminal TE1 and E1 of DLC2.

C Check if code "43" is output by the malfunction indicator lamp.

OK **Code "43" is output.**

C Start the engine.
Check if code "43" disappears.

OK **Code "43" is not output.**

NG

OK → **Proceed to next circuit inspection shown on matrix chart (See page Eg–514.)**

Check for open in harness and connector between engine control module and starter relay (See page IN–30).

OK

NG → **Repair or replace harness or connector.**

Check and replace engine control module.

DTC 52 53 55 Knock Sensor Circuit

CIRCUIT DESCRIPTION

Knock sensors are fitted one each to the front and rear of the left side of the cylinder block to detect engine knocking. This sensor contains a piezoelectric element which generates a voltage when it becomes deformed, which occurs when the cylinder block vibrates due to knocking. If engine knocking occurs, ignition timing is retarding to suppress it.

DTC No.	Diagnostic Trouble Code Detecting Condition	Trouble Area
52	No No.1 knock sensor signal to ECM for 4 crank revolutions with engine speed between 2,050 rpm and 5,950 rpm	• Open or short in No.1 knock sensor circuit • No.1 knock sensor (Looseness) • ECM
53	Engine control computer (for knock control) malfunction at engine speed between 650 rpm and 5,200 rpm	• ECM
55	No No.2 knock sensor signal to ECM for 4 crank revolutions with engine speed between 2,050 rpm and 5,950 rpm	• Open or short No.2 knock sensor circuit • No.2 knock sensor (looseness) • ECM

If the ECM detects the above diagnosis conditions, it operates the fail safe function in which the corrective retard angle value is set to the maximum value.

DIAGNOSTIC TROUBLE CODE DETECTION DRIVING PATTERN

Purpose of the driving pattern.

(a) To simulate diagnostic trouble code detecting condition after diagnostic trouble code is recorded.

(b) To check that the malfunction is corrected when the repair is completed by confirming that diagnostic trouble code is no longer detected.

Malfunction: Open or short in Knock Sensor

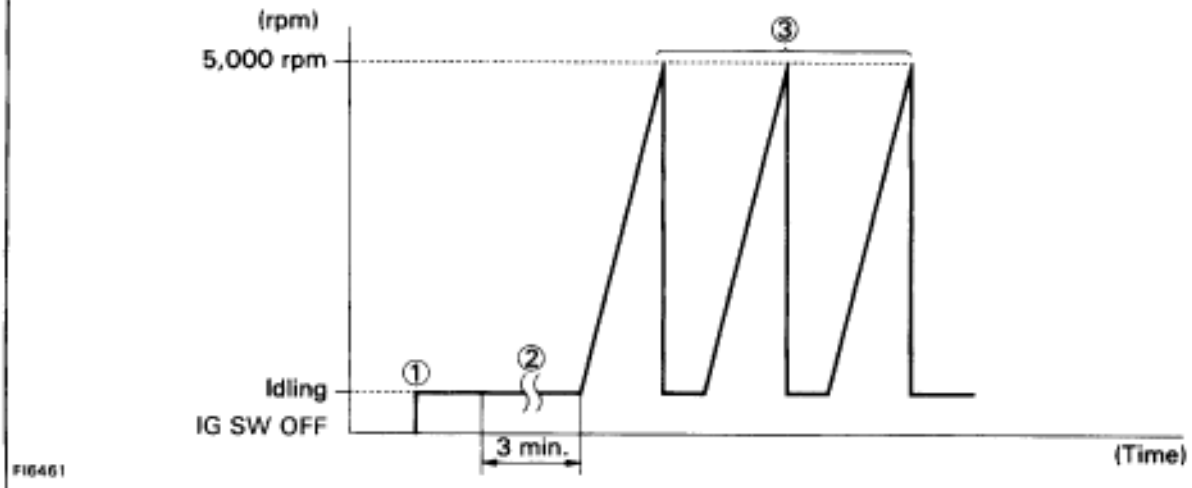

(1) Start the engine and warm up.
(2) Idle the engine for 3 min.
(3) With the A/C ON, race the engine quickly to 5,000 rpm 3 times.
(Rapidly depress the accelerator pedal and suddenly release it.)

HINT: If a malfunction exists, the malfunction indicator lamp will light up when sudden racing is performed.

NOTICE: If the conditions in this test are not strictly followed, detection of the malfunction will not be possible.

WIRING DIAGRAM

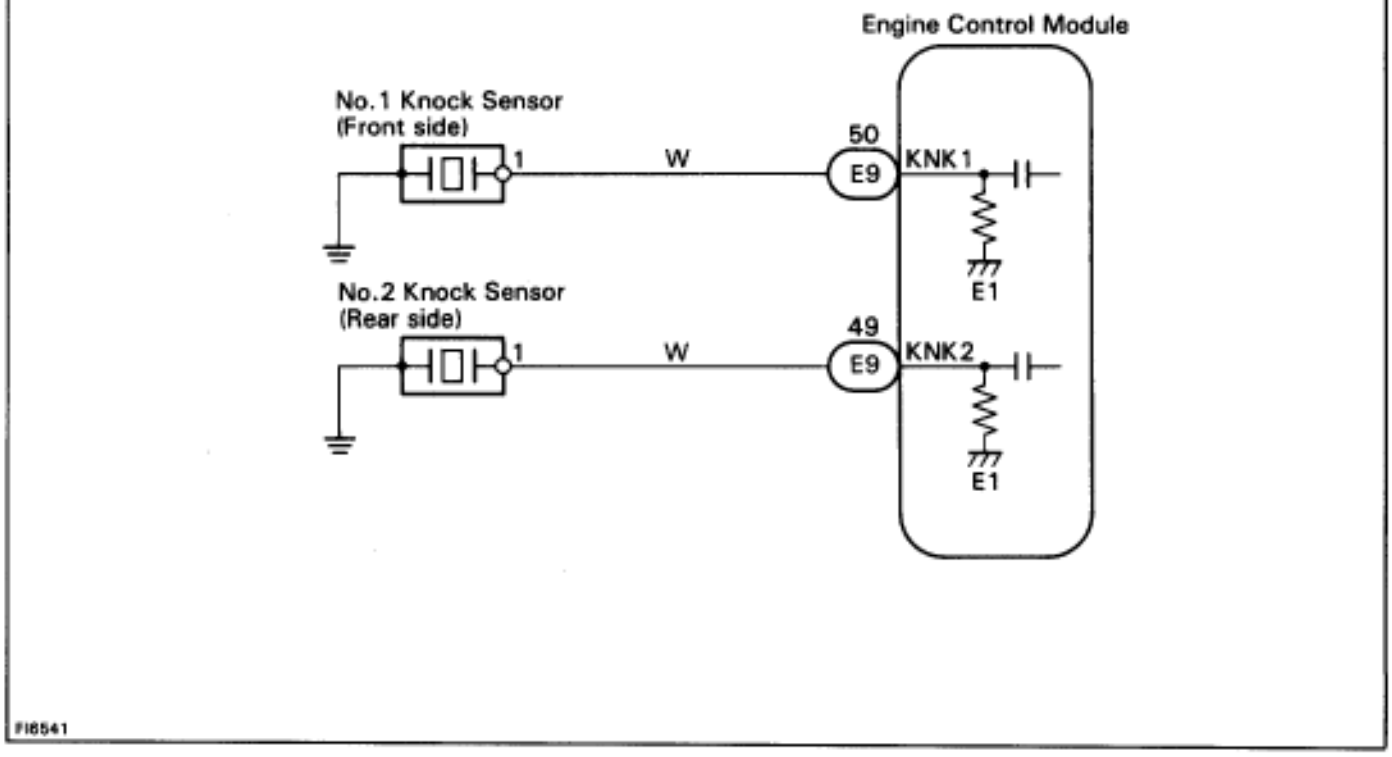

INSPECTION PROCEDURE

HINT: If diagnostic trouble code 52 is displayed, check No.1 knock sensor (for front side) circuit.
If diagnostic trouble code 55 is displayed, check No.2 knock sensor (for rear side) circuit.
If diagnostic trouble code 53 is displayed, replace engine control module.

1 **Check continuity between terminals KNK1, KNK2 of engine control module connector and body ground.**

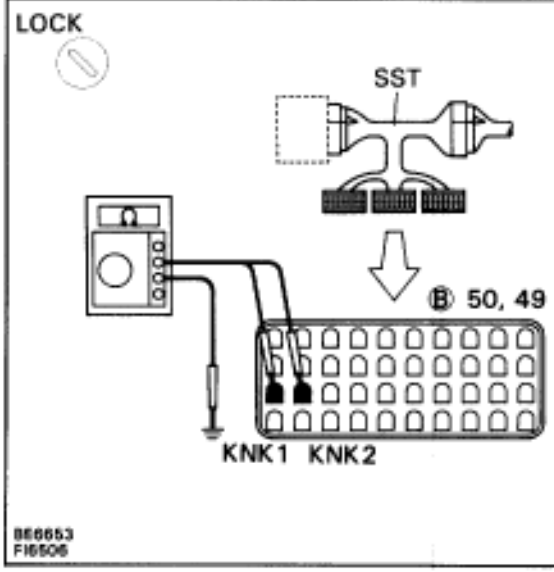

P (1) Connect SST (check harness “A”).
(See page EG–510)
SST 09990–01000
(2) Disconnect the engine control module connectors.

C Measure resistance between terminals KNK1, KNK2 of engine control module connector and body ground.

OK **Resistance: 1 M or higher**

NG

OK → Go to step 3

2 **Check knock sensor.**

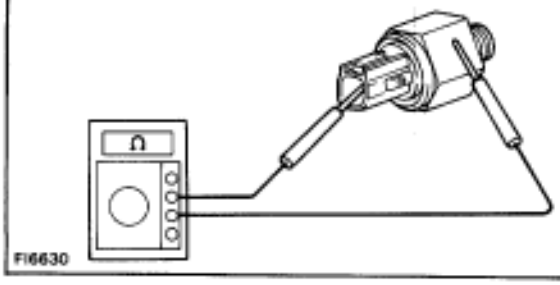

P Disconnect knock sensor connector.

C Measure resistance between the knock sensor terminal and body.

OK **Resistance: 1 M or higher**

OK

NG → **Replace knock sensor (See page EG–316)**

3 **Check for open and short in harness and connector between engine control module and knock sensor (See page IN–30).**

OK

NG → **Repair or replace harness or connector.**

4 **Does malfunction disappear when a good knock sensor is installed?**

NO

YES → **Replace knock sensor. (See page EG–316)**

Check and replace engine control module.

Reference **INSPECTION USING OSCILLOSCOPE**

KNK Signal Waveform

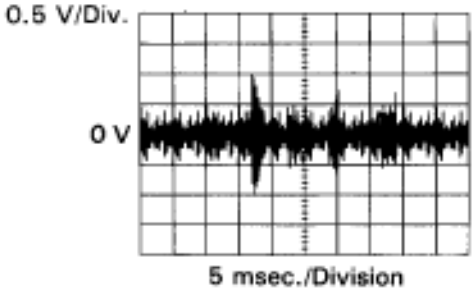

- With the engine racing (4,000 rpm) measure waveform between terminals KNK1, KNK2 of engine cotrol module and body ground.

HINT: The correct waveform is as shown.

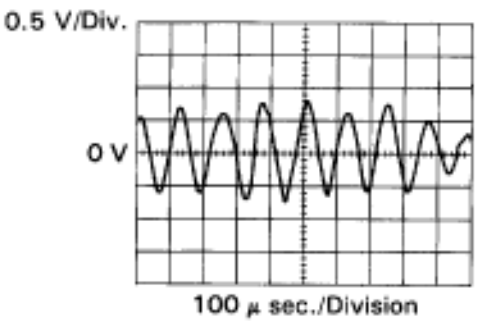

- Spread the time on the horizontal axis, and con firm that the period of the wave is 123 Ωsec. (Normal mode vibration frequency of knock sensor: 8.1 KHz).

HINT: If normal mode vibration frequency is not 8.1 KHz, the sensor is malfunctioning.

FI6510
FI6642

DTC 71 EGR System Malfunction

CIRCUIT DESCRIPTION

The EGR system is designed to recirculate the exhaust gas, controlled according to the driving conditions back into the intake air–fuel mixture. It helps to slow down combustion in the cylinder and thus lower the combustion temperature which, in turn, reduces the amount of NO_X emission. The amount of EGR is regulated by the EGR vacuum modulator according to the engine load.

If even one of the following conditions is fulfilled, the VSV is turned ON by a signal from the ECM. This resists in atmospheric air acting on the EGR valve, closing the EGR valve and shutting off the exhaust gas (EGR cut–OFF).

- Engine coolant temp. below 50˚C (122˚F)
- During deceleration (throttle valve closed)
- Light engine load (amount of intake air very small)
- Engine speed over 4,800 rpm
- Manifold absolute pressure more than 120 kPa (1.2 kgf/cm^2, 17.4 psi)

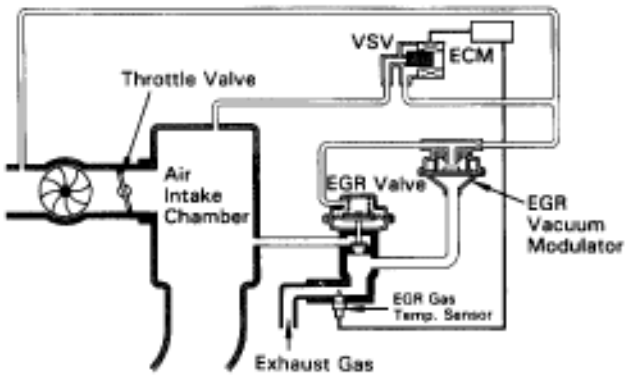

DTC No.	Diagnostic Trouble Code Detecting Condition	Trouble Area
71	EGR gas temp. and intake air temp. are 60˚C(140˚F) or less for A/T, 55˚C (131˚F) or less for M/T for 1 ~ 4 min. under conditions (a) and (b): (2 trip detection logic)* (a) Engine coolant temp.: 60˚C (140˚F) or more (b) EGR operation possible (Example A/T in 3rd speed (5th for M/T), A/C ON, 96 km/h (60 mph), Flat road)	• Open EGR gas temp. sensor circuit • Short in VSV circuit for EGR • EGR hose disconnected, valve stuck • Clogged EGR gas passage • ECM

*: **See page EG–503.**

DIAGNOSTIC TROUBLE CODE DETECTION DRIVING PATTERN

Purpose of the driving pattern.

(a) To simulate diagnostic trouble code detecting condition after diagnostic trouble code is recorded.

(b) To check that the malfunction is corrected when the repair is completed by confirming that diagnostic trouble code is no longer detected.

CIRCUIT DESCRIPTION (Cont'd)

Malfunction: Open in EGR Gas Temp. Sensor Circuit

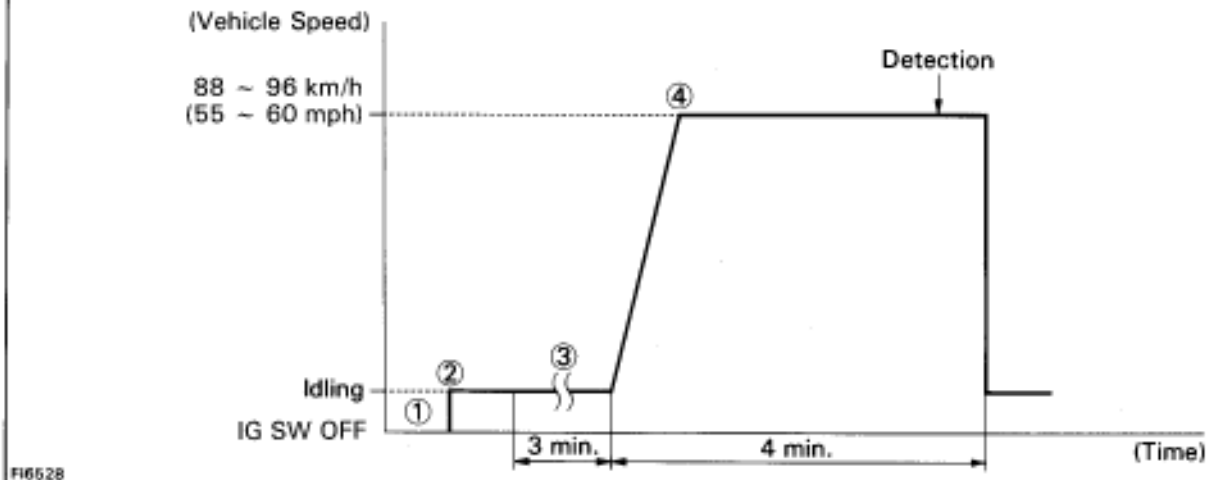

(1) Disconnect the EFI No.1 fuse (30A) for 10 sec. or more, with IG switch OFF. Initiate test mode (Connect terminal TE2 and E1 of data link connector 2 with IG switch OFF).
(2) Start the engine and warm up.
(3) Idle the engine for 3 min.
(4) With the A/C ON and transmission in 5th position (A/T in 3rd speed) drive at 88 96 km/h (55 60 mph) for 4 min or less.

HINT: If a malfunction exists, the malfunction indicator lamp will light up during step (4).

NOTICE: If the conditions in this test are not strictly followed, detection of the malfunction will not be possible.

WIRING DIAGRAM

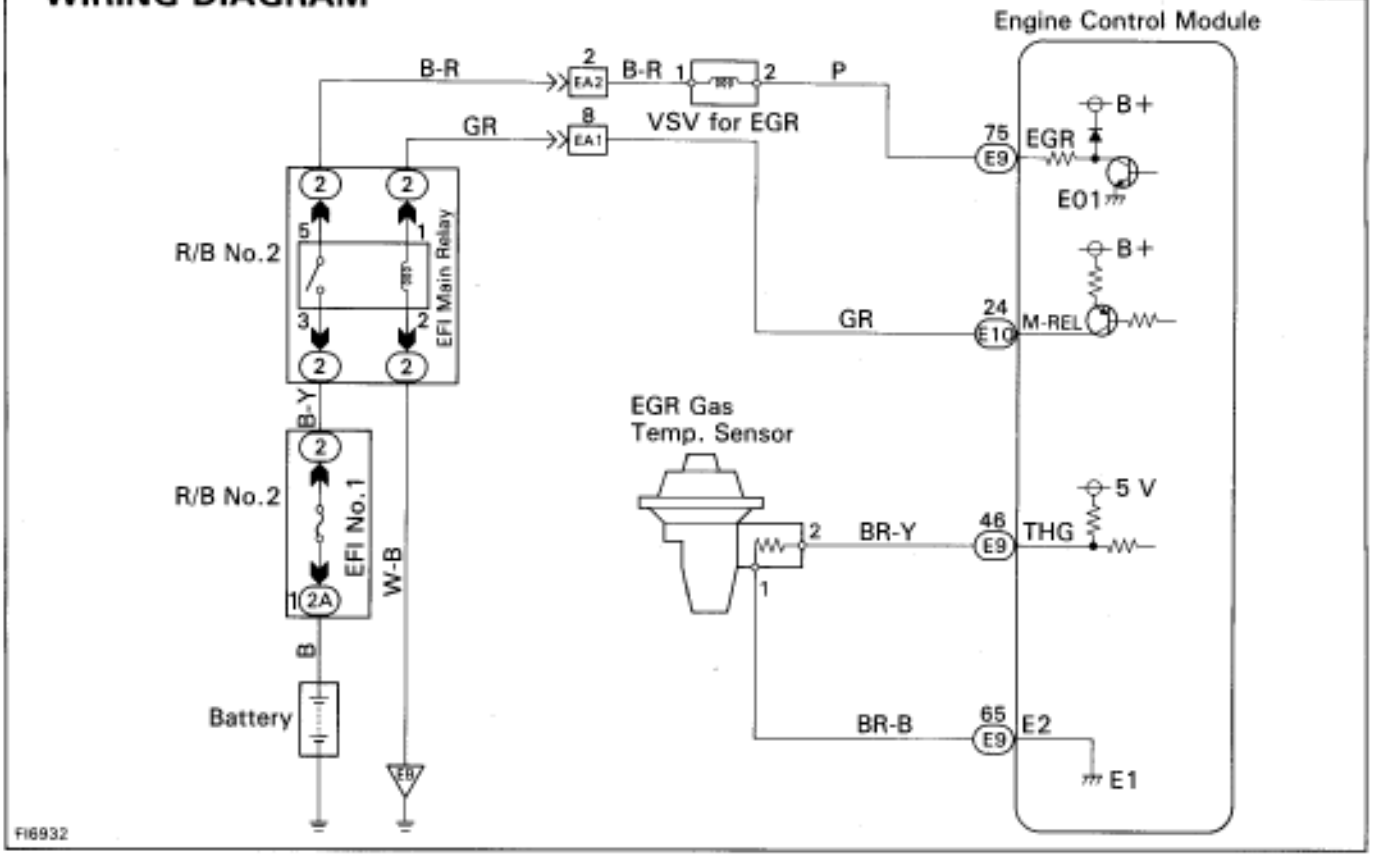

INSPECTION PROCEDURE

1 **Check voltage between terminal EGR of engine control module connector and body ground.**

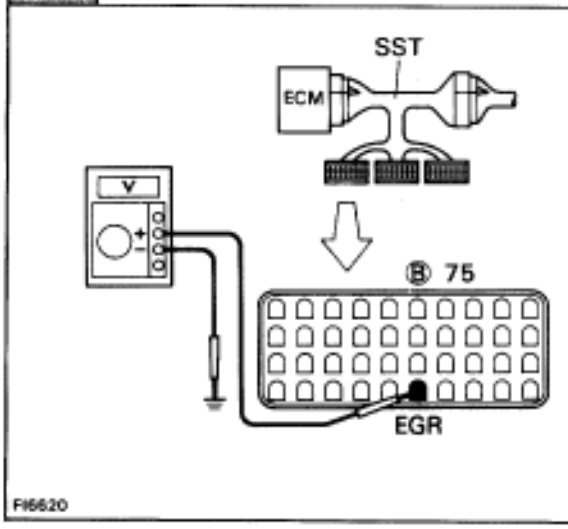

P (1) Connect SST (check harness “A”).
(See page EG–510)
SST 09990–01000
(2) Warm up engine to normal operating temperature.

C Measure voltage between terminal EGR of engine control module connector and body ground.

OK **Voltage: 9 — 14 V**

NG

OK → **Go to step 4.**

2 **Check resistance between terminals of VSV for EGR.**

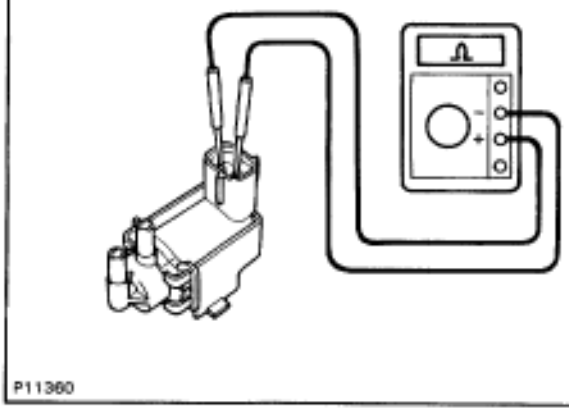

P Remove VSV for EGR. (See page EG–310)

C Measure resistance between terminals of VSV for EGR.

OK **Resistance: 30 — 34 Ω at 20°C (68°F)**

OK

NG → **Replace VSV for EGR.**

3 **Check for open and short in harness and connector between EFI main relay and VSV for EGR, VSV for EGR and engine control module (See page IN–30).**

OK

NG → **Repair or replace harness or connector.**

Check and replace engine control module.

4 **Check EGR system (See page EG–180).**

OK → NG: **Repair EGR system.**

5 **Check resistance of EGR gas temp. sensor.**

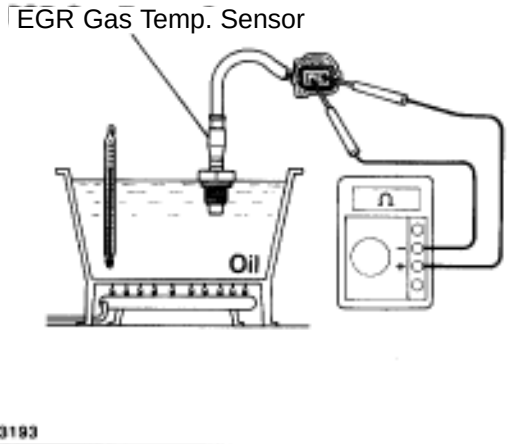

P Remove EGR gas temp. sensor.

C Measure resistance between terminals of EGR gas temp. sensor connector.

OK **Resistance: 64 — 973 k at 50°C (122°F)**
11 — 163 k at 100°C (212°F)
2 — 3 k at 150°C (302°F)

OK → NG: **Replace EGR gas temp. sensor.**

6 **Check for open in harness and connector between EGR gas temp. sensor and engine control module. (See page IN–30).**

OK → NG: **Repair or replace harness or connector.**

Check and replace engine control module.

DTC 78 Fuel Pump Control Circuit

CIRCUIT DESCRIPTION

The fuel pump speed is controlled at 2 steps (high speed, low speed) by the condition of the engine (starting, light load, heavy load), when the engine starts (STA ON), the engine control module sends a Hi signal (battery positive voltage) to the fuel pump ECU (FPC terminal).
The fuel pump ECU then outputs Hi voltage (battery positive voltage) to the fuel pump so that the fuel pump operates at high speed.
After the engine starts, during idling or light loads, the engine control module outputs a Low signal (about 9 V) to the fuel pump ECU, the fuel pump ECU outputs Low battery voltage (about 9 V) to the fuel pump and causes the fuel pump to operate at low speed.
If the intake air volume increases (high engine load), the engine control module sends a Hi signal to the fuel pump ECU and causes the fuel pump to operate at high speed.

DTC No.	Diagnostic Trouble Code Detecting Condition	Trouble Area
78	(1) Open or short in fuel pump circuit for 1 sec. Or more with engine speed 1,000 rpm or less (2 trip detection logic)*	• Open or short in fuel pump ECU circuit • Fuel pump ECU • Engine control module power source circuit • Fuel pump • Engine control module
	(2) Open in input circuit of fuel pump ECU (FPC) with engine speed 1,000 rpm or less (2 trip detection logic)*	
	(3) Open or short in diagnostic signal line (DI) of fuel pump ECU with engine speed 1,000 rpm or less (2 trip detection logic)*	

*: See page EG–503.

WIRING DIAGRAM

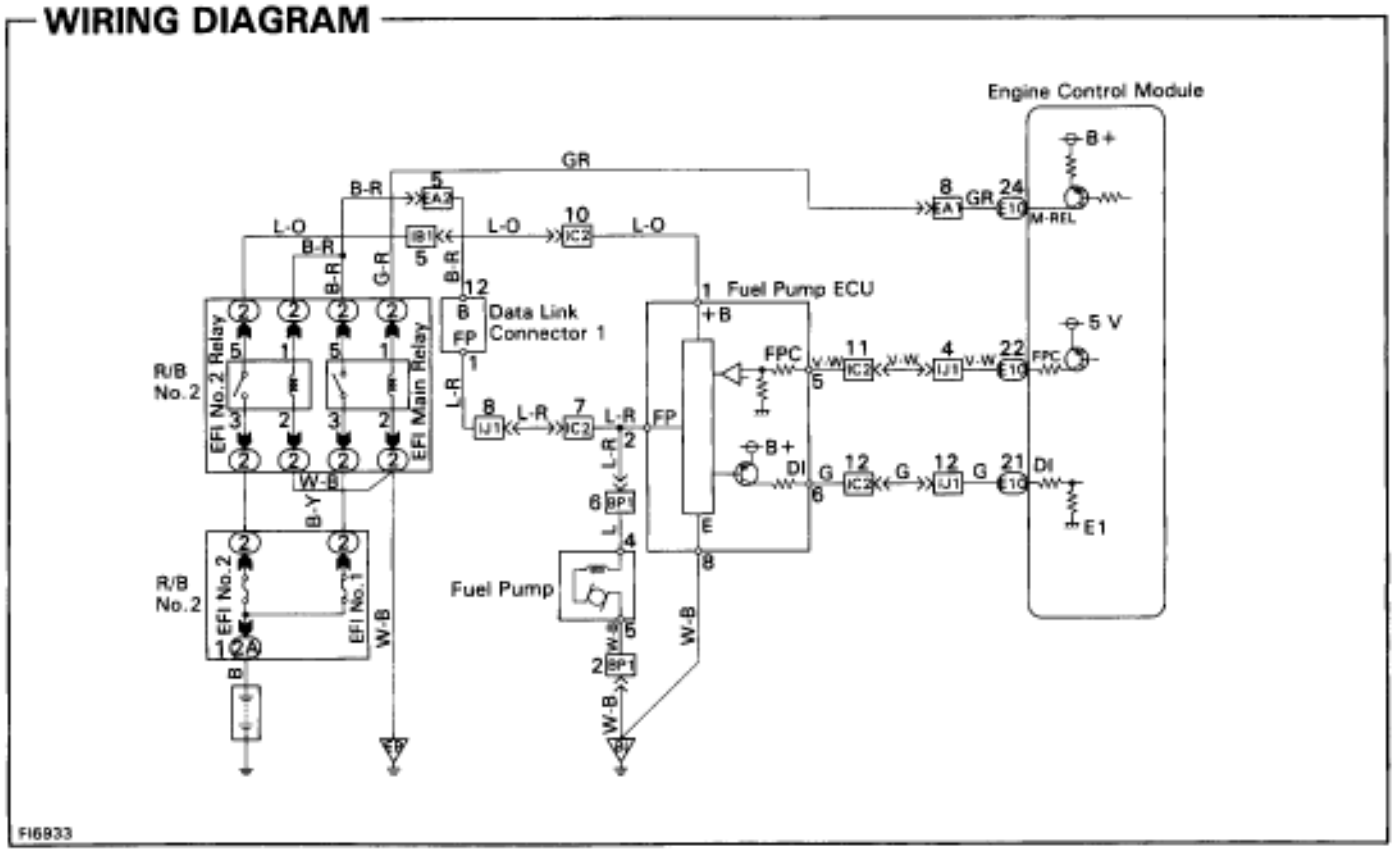

INSPECTION PROCEDURE

1 **Check fuel pump operation.**

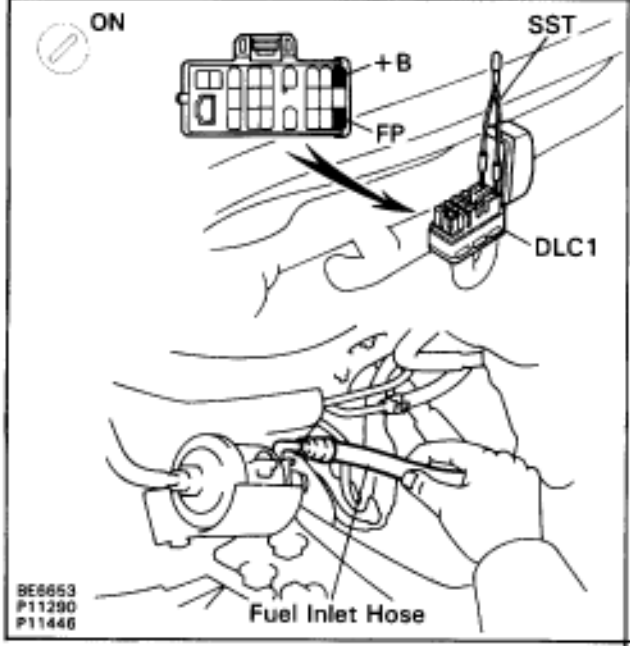

P (1) Turn ignition switch ON.
(2) Using SST, connect terminals +B and FP of data link connector 1.
SST 09843–18020

C Check that there is pressure in the hose from the fuel filter.

OK **Fuel pressure can be felt.**

OK

NG → Go to step **3**.

2 **Check for open and short in harness and connector between terminals +B ↔ +B, FP ↔ FP of the data link connector 1 and fuel pump ECU (See page IN–30).**

NG

OK → Go to step **5**.

Repair or replace harness or connector.

3 **Check voltage of terminal +B of data link connector 1.**

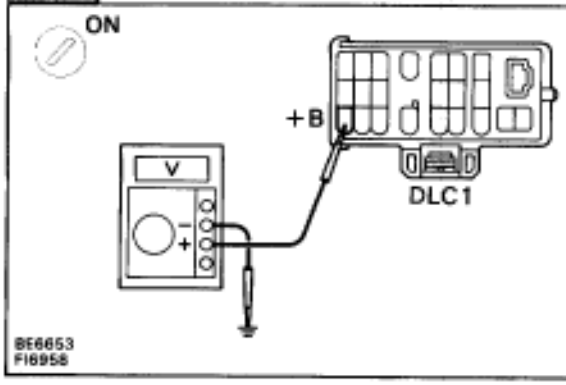

P Turn ignition switch ON.

C Measure voltage between terminal +B of data link connector 1 and body ground.

OK **Voltage: 9 — 14 V**

OK

NG → **Check for ECM power source circuit (See page EG–576), and check for open in harness and connector between terminal +B of data link connector 1 and main relay.**

4 **Check for open and short in harness and connector between terminal FP of data link connector 1, fuel pump and body ground)See page IN–30).**

NG → **Repair or replace harness or connector.**

OK → **Repair or replace fuel pump.**

5 **Check voltage between terminals 5 (FPC) and 8 (E) of fuel pump ECU connector.**

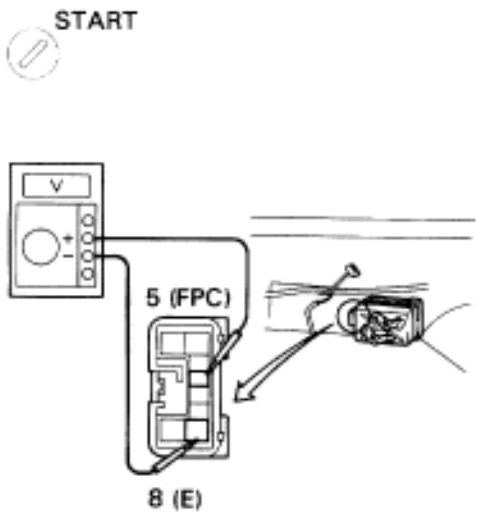

P (1) Remove the LH quarter trim panel.
(See page EG–323)
(2) Disconnect fuel pump ECU connector.

C Measure voltage between terminals 5 (FPC) and 8 (E) of fuel pump ECU connector when igintion switch is turned to START.

OK **Voltage: 4.5 — 5.5 V**

NG → **Replace fuel pump ECU.**

OK → **Replace fuel pump ECU.**

6 **Check for open in harness and connector between terminal FPC of engine control module and terminal 5 (FPC) of fuel pump ECU, terminal 8 (E) of fuel pump ECU and body ground (See page IN–30).**

NG → **Repair or replace harness or connector.**

OK → **Repair or replace harness or connector.**

7 **Check for open and short in harness and connector between terminal DI of engine control module and terminal 6 (DI) of fuel pump ECU (See page IN–30).**

NG → **Repair or replace harness or connector.**

OK → **Check and replace engine control module.**

DTC 51 Switch Condition Signal Circuit

CIRCUIT DESCRIPTION

Park/Neutral Position Switch

The ECM uses the signals from the park/neutral position switch to determine whether the transmission is in park or neutral, or in some other position.

Air Conditioning Switch Signal

The ECM uses the output from the air conditioning switch to determine whether or not the air conditioning is operating so that it can increase the idling speed of the engine if necessary.

Throttle Position Sensor IDL Signal

The IDL contacts are mounted in the throttle position sensor, and detects the idle condition.

DTC No.	Diagnostic Trouble Code Detecting Condition	Trouble Area
51	(1) 3 sec. or more after engine starts with closed throttle position switch OFF (IDL1) (2) Park/neutral position switch: OFF (Shift position in "R", "D", "2" or "1" position.) (3) A/C switch ON	• Throttle position sensor IDL circuit • Accelerator pedal and cable • Park/neutral position switch • A/C switch circuit • ECM

HINT: In this circuit, diagnosis can only be made in the test mode.

WIRING DIAGRAM

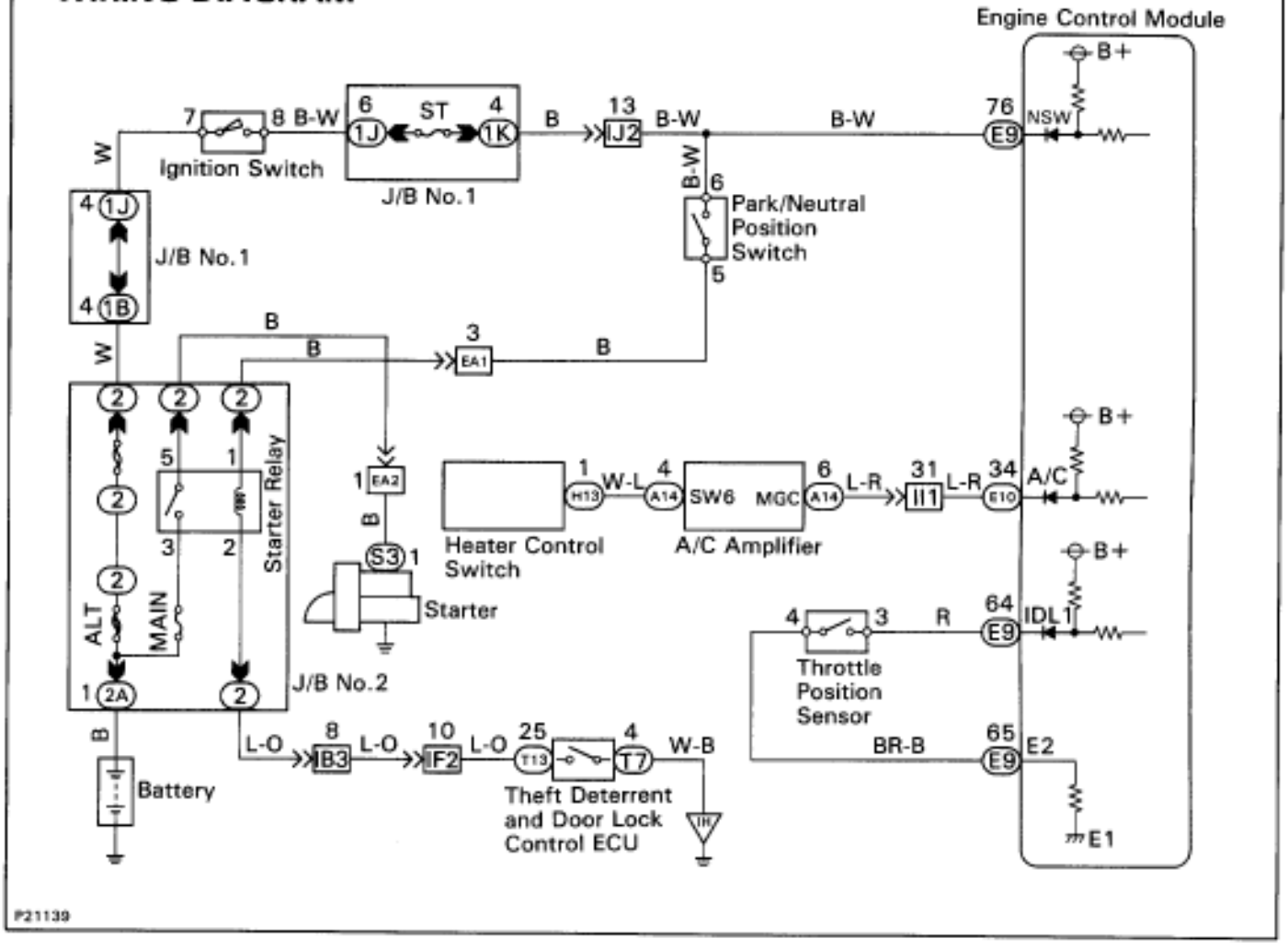

INSPECTION PROCEDURE

1 Check output condition of diagnostic trouble code 51.



FI6914

P Setting the test mode.
(1) Turn ignition switch OFF.
(2) Connect terminals TE2 and E1 of DLC2.
(3) Turn ignition switch ON.
(For checking terminal IDL, disconnect the vacuum hose from the throttle body, then apply vacuum to the throttle opener (See page EG–292)).
((For checking terminal A/C, start the engine.)
(4) connect terminals TE1 and E1 of DLC2.

C Check if code “51” is output by the malfunction indicator lamp.

OK

	Condition	Code
Park/Neutral Position Switch (PNP)	P or N position	Normal *
	R, D, 2 or L position	51 *
Throttle Position Sensor (IDL1)	Accelerator pedal released	Normal *
	Accelerator pedal depressed	51 *
A/C Switch (A/C)	A/C SW ON	51
	A/C SW OFF	Normal

*: Before the STA signal is input (ST is not ON), diagnostic trouble code 43 is also output.

Hint Diagnostic trouble code 42 is output with vehicle speed 5 km/h (3 mph) or below.

OK

NG **IDL1...Go to step [2].**
PNP....Go to page Eg–574.
A/C....Go to step [3].

Proceed to next circuit inspection shown on matrix chart (See page Eg–514).

2 Check throttle position sensor.

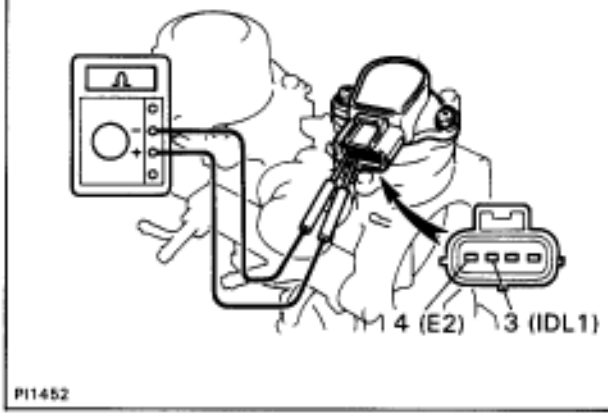

P (1) Remove throttle body.
(See page EG 291)
(2) Apply vacuum to throttle opener.
(See page EG–292)

C Measure resistance between terminals 3 (IDL1) and 4 (E2) of throttle position sensor connector.

OK

Throttle Valve	Resistance
Fully closed	Less than 0.5 kΩ
Opened	1 MΩ or higher

OK

NG **Adjust or replace throttle position sensor. (See page EG–292)**

Check and repair harness or connector between engine control module and throttle position sensor.

3 Check voltage between terminal A/C of engine control module connector and body ground.

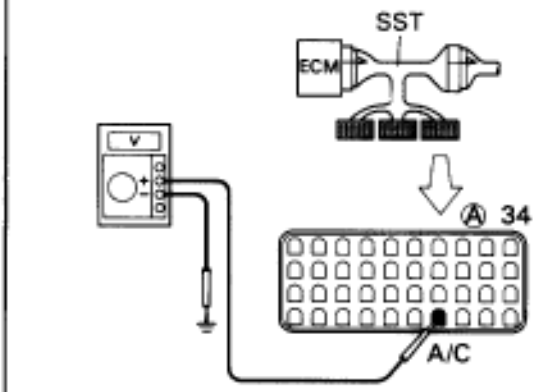

P (1) Connect SST (check harness “A”).
(See page EG–510)
SST 09990–01000
(2) Start the engine.

C Measure voltage between terminal A/C of engine control module and body ground.

OK

A/C Switch	Voltage
OFF	7.5 – 14 V
ON	0 – 1.5 V

OK

NG **Check A/C compressor circuit. (See page EG–62)**

Check and replace engine control module.

Park Neutral Position Switch Circuit

CIRCUIT DESCRIPTION

The park/neutral position switch goes on when the shift lever is in the N or P shift position. When it goes on the terminal NSW of the ECM is grounded to body ground via the starter relay and theft deterrent ECU, thus the terminal NSW voltage becomes 0 V. When the shift lever is in the D, 2, L or R position, the park/neutral position switch goes off, so the voltage of ECM terminal NSW becomes positive battery voltage, the voltage of the ECM internal power source.

If the shift lever is moved from the N position to the D position, this signal is used for air–fuel ratio correction and for idle speed control (estimated control), etc.

When the park/neutral position switch is off, code ”51” is output in the test mode diagnosis. (This is not abnormal.)

WIRING DIAGRAM

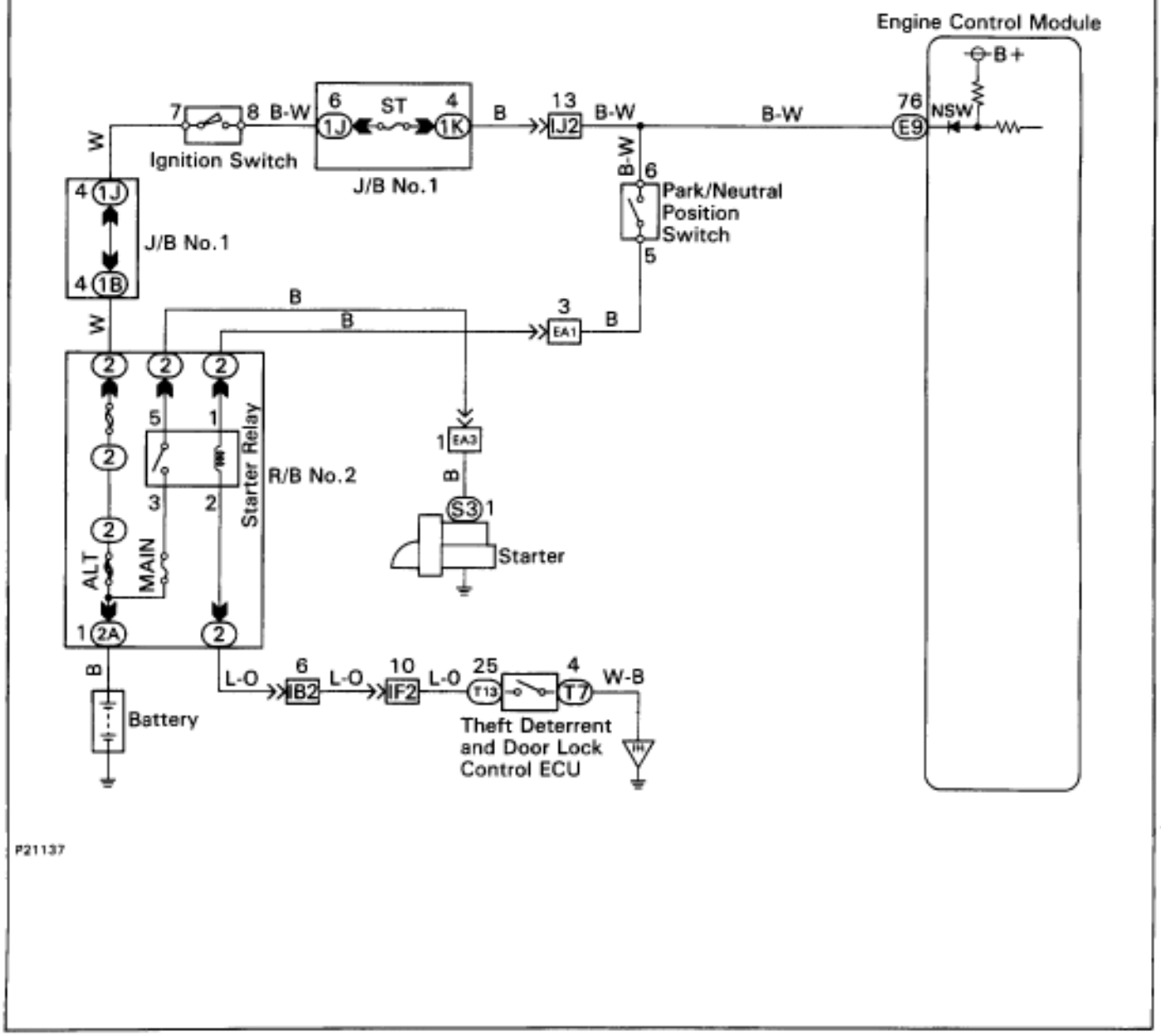

INSPECTION PROCEDURE

HINT: This diagnosis chart is based on the premise that the engine is being cranked under normal conditions. If the engine does not crank, proceed to the matrix chart of problem symptoms on page EG–514.

1 **Check output condition of diagnostic trouble code 51.**

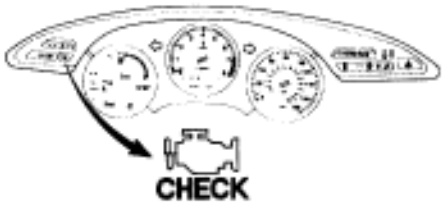

FI6914

P
(1) Connect terminals TE2 and E1 of DLC2.
(2) Turn ignition switch ON.
(3) Crank the engine.
(4) Connect terminals TE1 and E1 of DLC2.

C
Check if diagnostic trouble code "51" is output when the shift lever is in the P and D shift positions.

Result

Shift Position	Result		
	OK	NG Type I	NG Type II
"P"	Normal Code	Code 51	Normal Code
"D"	Code 51	Code 51	Normal Code

OK

NG Type I → Go to step 2.

NG Type II → Go to step 3.

Proceed to next circuit inspection shown on matrix chart (See page EG–514).

2 **Check for open in harness and connector between engine control module and park/neutral position switch (See page IN–30).**

NG

OK → **Check and replace engine control module.**

Repair or replace harness or connector.

3 **Check park/neutral position switch (See page AT2–101).**

OK

NG → **Replace park/neutral position switch.**

Check and replace engine control module.

ECM Power Source Circuit

CIRCUIT DESCRIPTION

When the ignition switch is turned on, battery voltage is applied to the terminal IGSW of the ECM, and the main relay control circuit in the ECM sends a signal to the terminal M–REL of the ECM, switching on the main relay. This signal causes current to flow to the coil, closing the contacts of the main relay and supplying power to the terminal + B of the ECM.
If the ignition switch is turned off, the ECM continues to switch on the main relay for a maximum of 2 seconds for the initial setting of the IAC valve.

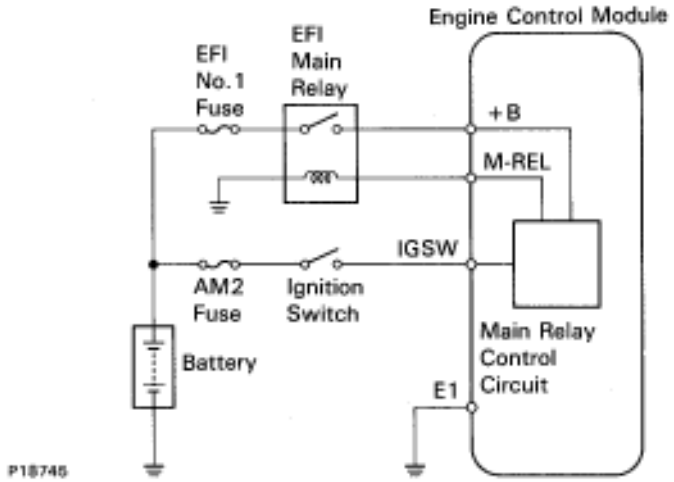

WIRING DIAGRAM

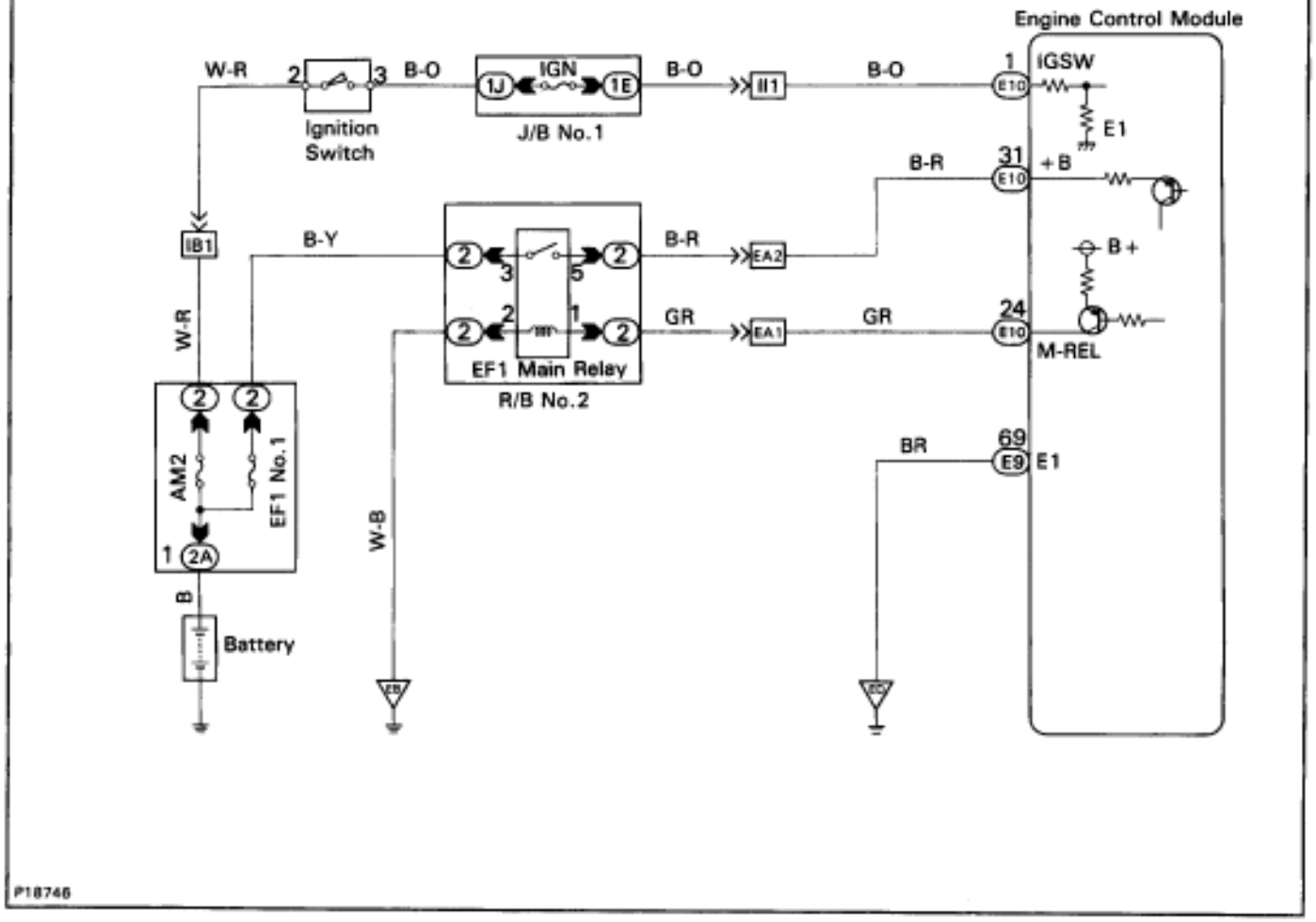

INSPECTION PROCEDURE

1 Check voltage between terminal +B and E1 of engine control module connector.

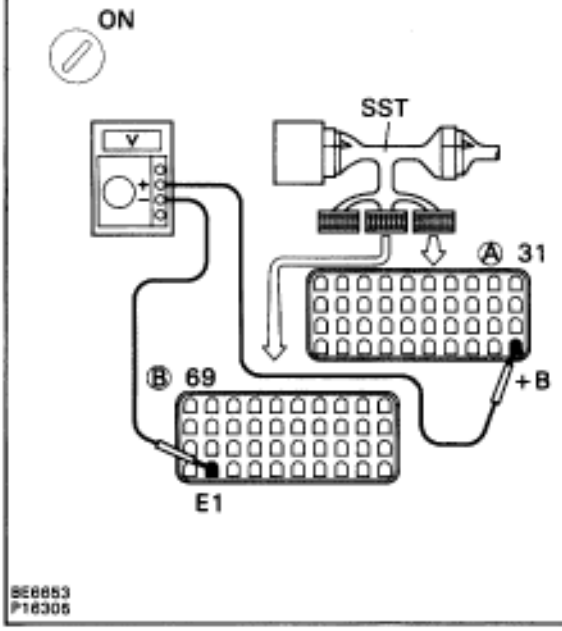

P (1) Connect SST (check harness “A”).
(See page EG–510)
SST 09990–01000
(2) Turn ignition switch ON.

C Measure voltage between terminal +B and E1 of engine control module connector.

OK **Voltage: 9 — 14 V**

NG

OK → **Proceed to next circuit inspection shown on matrix chart (See page EG–514).**

2 Check for open in harness and connector between terminal E1 of engine control module and body ground (See page IN–30).

OK

NG → **Repair or replace harness or connector.**

3 Check voltage between terminal IGSW of engine control module connector and body ground.

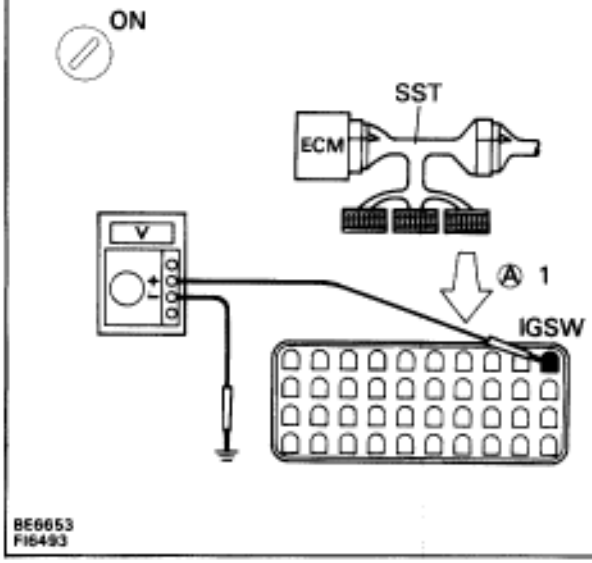

P Turn ignition switch ON.

C Measure voltage between terminal IGSW of engine control module connector and body ground.

OK **Voltage: 9 — 14 V**

NG

OK → **Go to step 6.**

4 Check IGN fuse.

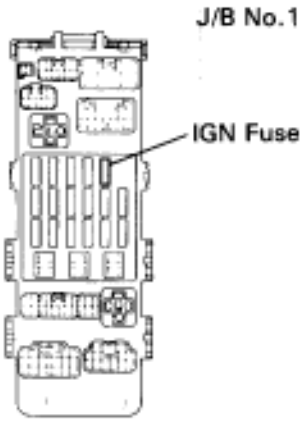

NO8417

P Remove IGN fuse from J/B No.1.

C Check continuity of IGN fuse.

OK **Continuity**

OK

NG **Check for short in the harness and all the components connected to IGN fuse (See Electrical Wiring Diagram).**

5 Check ignition switch.

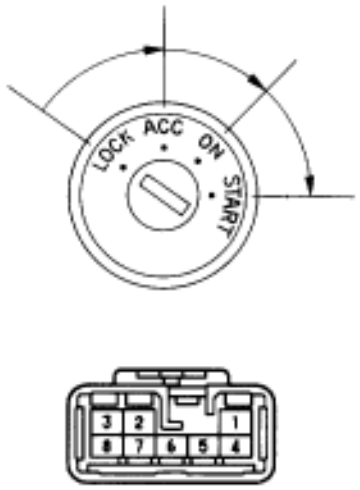

8E3582
g-8-2

P (1) Remove finish lower panel and finish lower panel LH.
(2) Remove heater to register duct No.2.

C Check continuity between terminals.

OK ○—○ continuity

Terminal / Switch position	1	2	3	4	5	7	8
LOCK							
ACC					○	○	
ON		○	○	○	○	○	
START	○	○	○	○		○	○

OK

NG **Replace ignition switch.**

Check and repair harness and connector between battery and ignition switch, ignition switch and engine control module.

6 Check voltage between terminal M–REL of engine control module connector and body ground

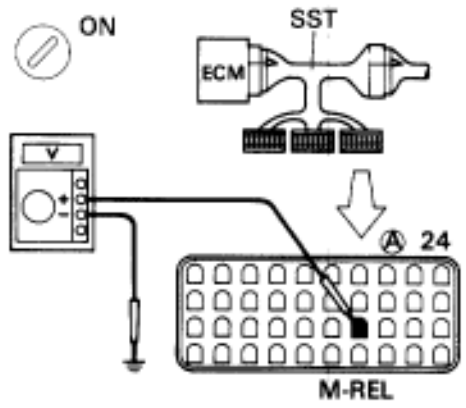

P Turn ignition switch ON.

C Measure voltage between terminal M–REL of engine control module connector and body ground.

OK **Voltage: 9 — 14 V**

OK

NG > **Check and replace engine control module.**

7 Check EFI No.1 Fuse.

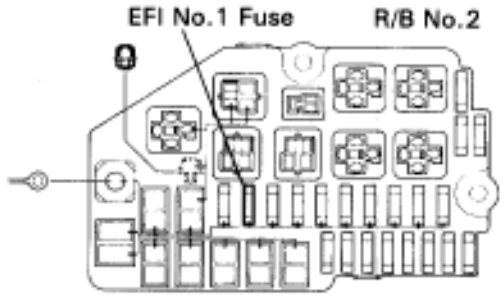

P Remove EFI No.1 fuse from R/B No.2.

C Check continuity of EFI No.1 fuse.

OK **Continuity**

OK

NG > **Check for short in the harness and all the components connected to EFI No.1 fuse (See Electrical Wiring Diagram).**

8 Check EFI main relay.

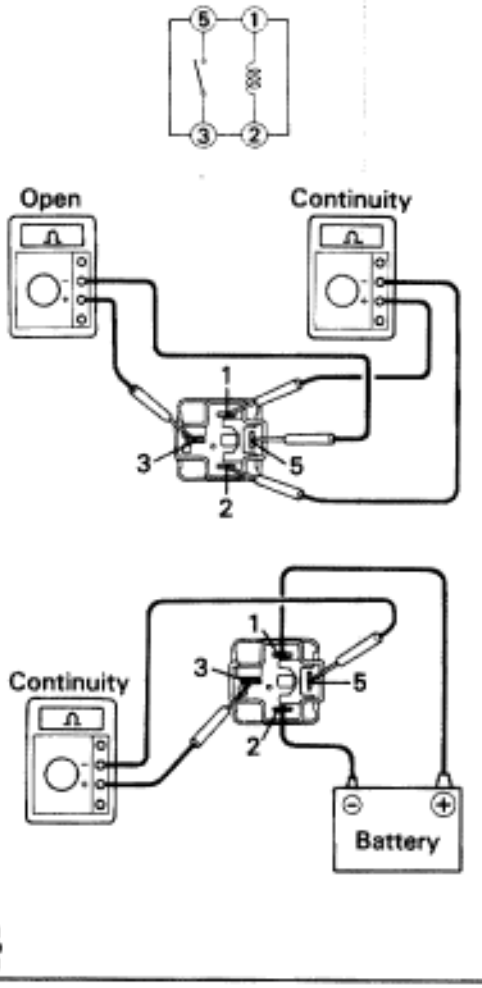

P Remove EFI main relay from R/B No.2.

C Check continuity between terminals of EFI main relay shown below.

OK

Terminals 3 and 5	Open
Terminals 1 and 2	Continuity (Reference value 72 Ω)

C (1) Apply battery positive voltage between terminals 1 and 2.
(2) Check continuity between terminals 3 and 5.

OK

Terminals 3 and 6	Continuity

OK → NG: **Replace EFI main relay.**

9 Check for open and short in harness and connector between terminals M–REL of engine control module and body ground (See page IN–30).

OK → NG: **Repair or replace harness or connector.**

Check and repair harness or connector between EFI No.1 fuse and battery.

Back Up Power Source Circuit

CIRCUIT DESCRIPTION

Battery positive voltage is supplied to terminal BATT of the ECM even when the ignition switch is off for use by the diagnostic trouble code memory and air–fuel ratio adaptive control value memory, etc.

WIRING DIAGRAM

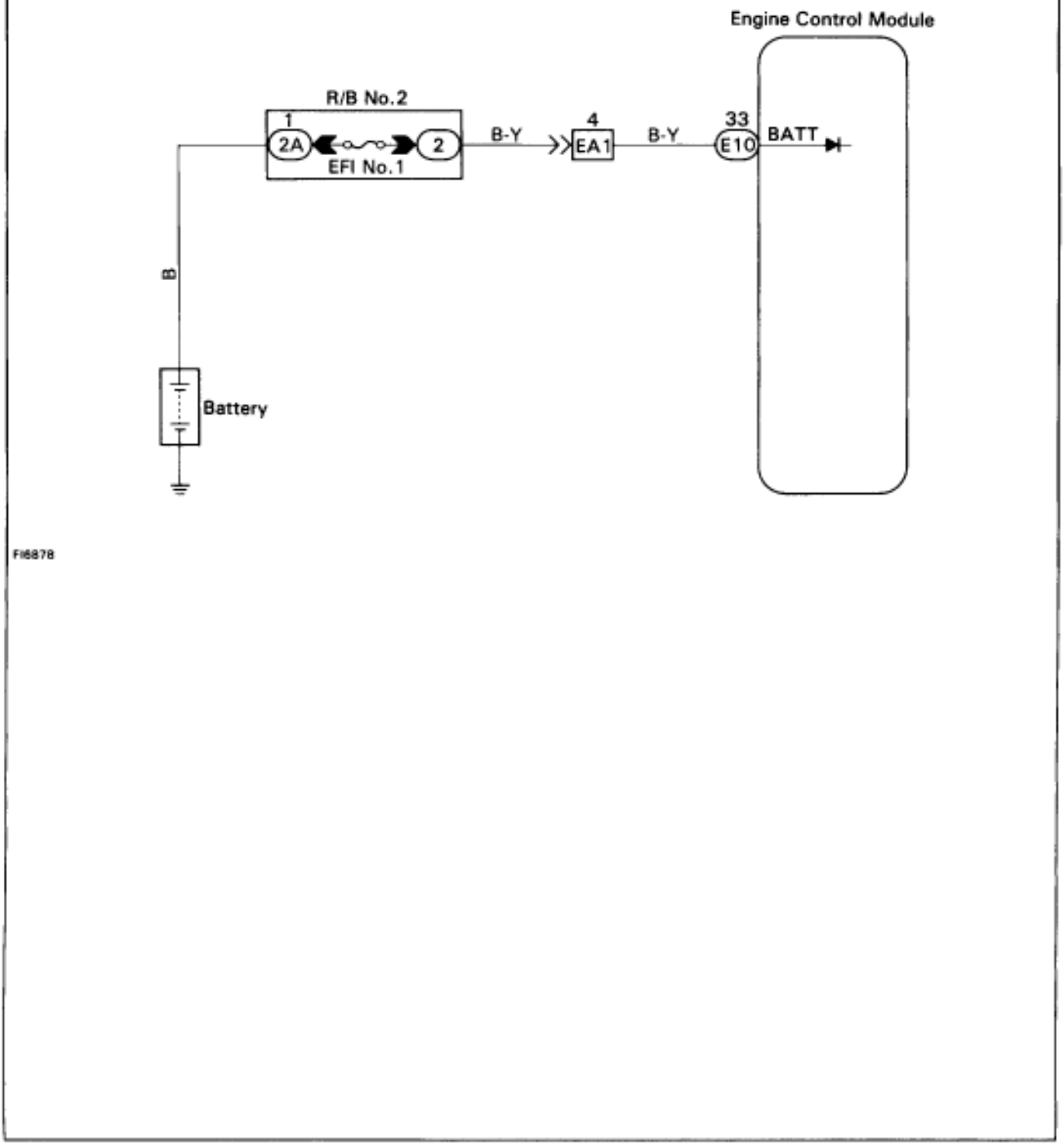

INSPECTION PROCEDURE

1 Check EFI No.1 Fuse.

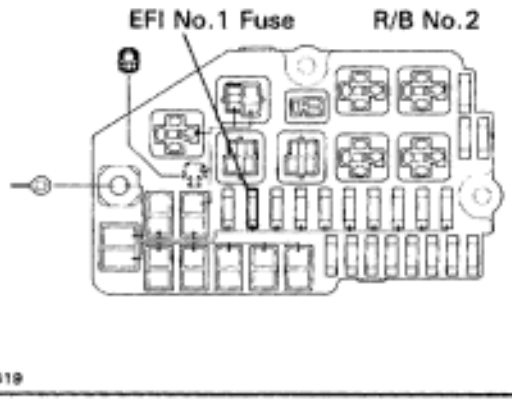

P Remove EFI No.1 fuse from R/B No.2.

C Check continuity of EFI No.1 fuse.

OK **Continuity**

OK

NG **Check for short in the harness and all the components connected to EFI No.1 fuse (See attached wiring diagram).**

2 Check voltage between terminal BATT of engine control module connector and body ground.

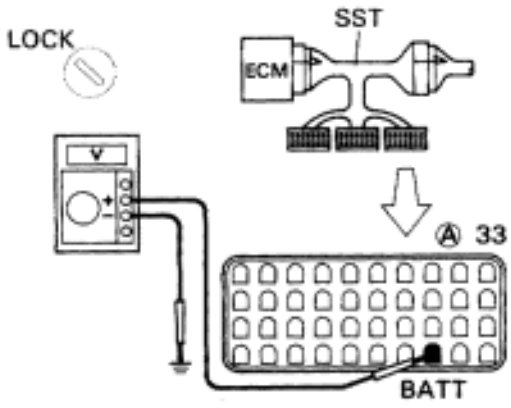

P Connect SST (check harness “A”).
See page EG–510)
SST 09990–01000

C Measure voltage between terminal BATT of engine control module connector and body ground.

OK **Voltage: 9 — 14 V**

OK

NG **Check and repair harness or connector between engine control module and EFI No.1 fuse, EFI No.1 fuse and battery.**

3 Are the diagnostic trouble codes still in the memory when the ignition switch is turned OFF?

YES

NO **Check and replace engine control module.**

Proceed to next circuit inspection shown on matrix chart (See page EG–514).

Injector Circuit

CIRCUIT DESCRIPTION

The injectors are located in the intake manifold. They inject fuel into the cylinders based on the signals from the engine control module.

Reference **INSPECTION USING OSCILLOSCOPE**

- With engine idling measure waveform between terminals # 10 ~ 60 and E01 of engine control module.

HINT: The correct waveform is as shown.

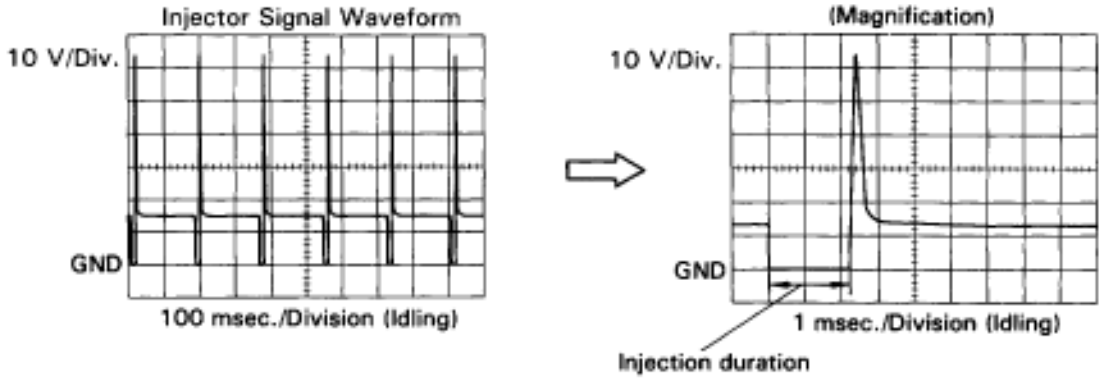

FI6588 FI6538

WIRING DIAGRAM

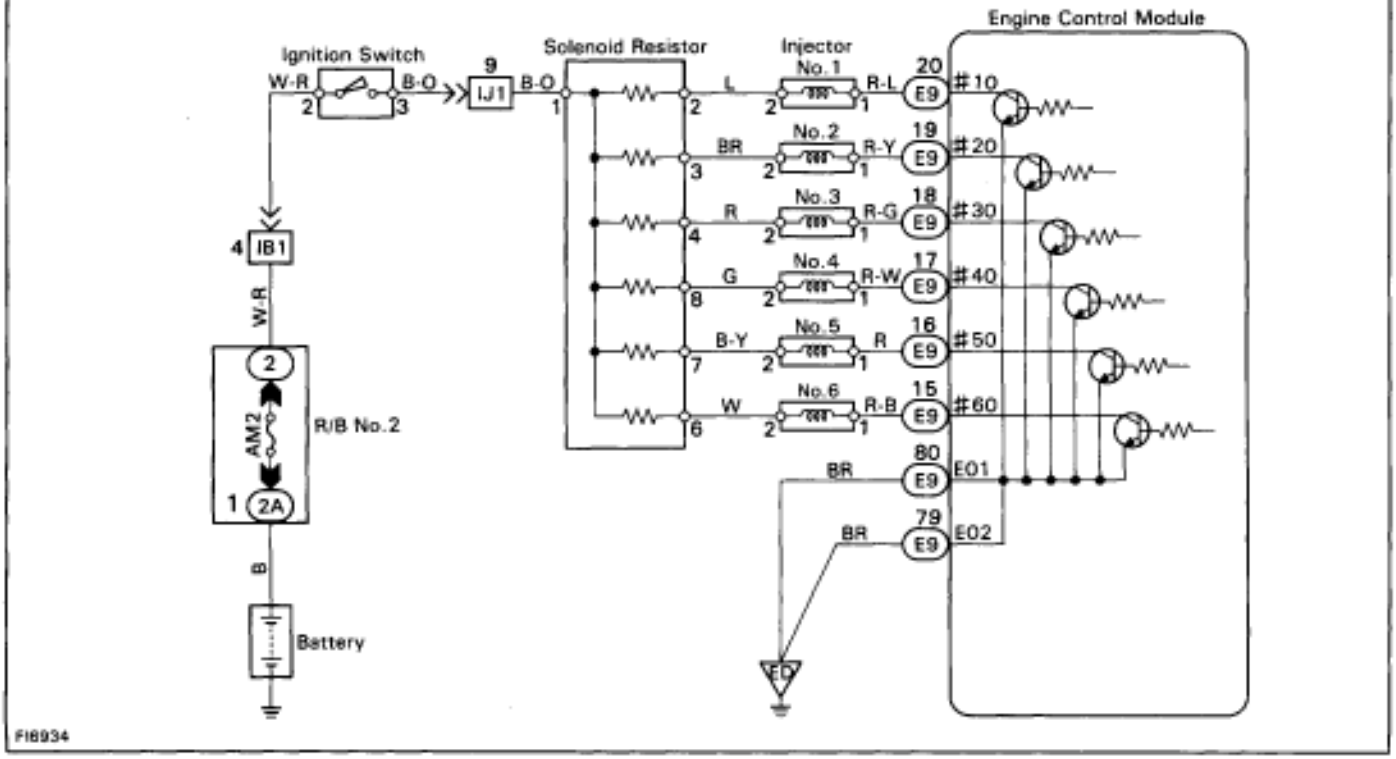

FI8934

INSPECTION PROCEDURE

1 **Check voltage between terminals # 10 ~ 60 of engine control module and body ground.**

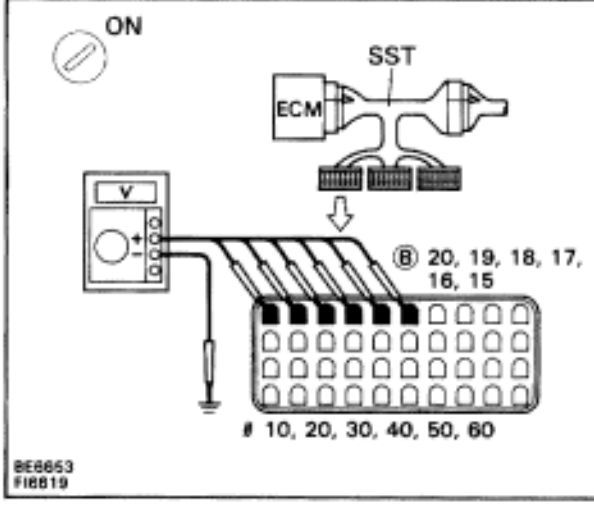

P (1) Connect SST (check harness “A”).
See page EG–510)
SST 09990–01000
(2) Turn ignition switch ON.

C Measure voltage between terminals # 10 ~ 60 of engine control module and body ground.

OK **Voltage: 9 — 14 V**

NG

OK → Go to step 4.

2 **Check AM2 fuse.**

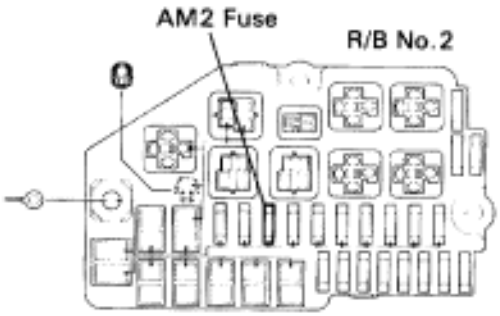

P Remove AM2 fuse from R/B No.2.

C Check continuity of AM2 fuse.

OK **Continuity**

OK

NG → **Check for short in the harness and all the components connected to AM2 fuse.**

3 **Check resistance between terminals 1 and 2 ~ 4, 6 ~ 8 of solenoid resistor connector.**

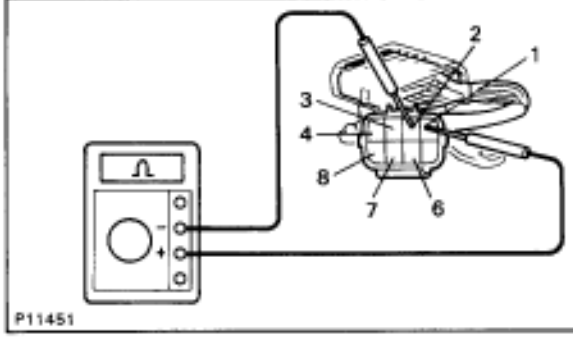

P Disconnect solenoid resistor connector.

C Measure resistance between terminals 1 and 2 ~ 4, 6 ~ 8 of solenoid resistor connector.

OK **Resistance: Approx. 6 at 20˚C (68˚F)**

OK

NG **Replace solenoid resistor.**

Check and repair harness and connector between engine control module and battery.

4 **Check for open in harness and connector between terminal E01, E02 of ECM connector and body ground (See page IN–30).**

OK

NG **Repair or replace harness or connector.**

5 **Check injectors.**

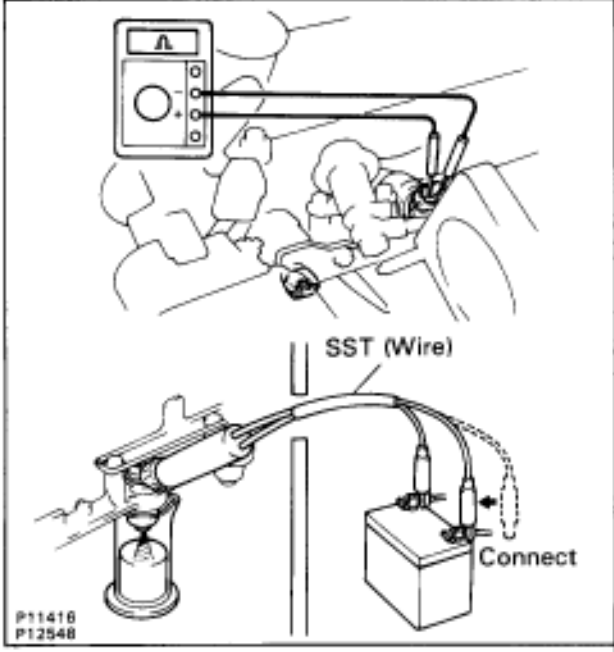

P Disconnect injector connector.
See page EG–273)

C Measure resistance of injector.

OK **Resistance: Approx. 1.95 at 20˚C (68˚F)**

C Check injection volume of injector.
(See page EG–279)

OK
- **Injection volume**
  124 ~ cm^3/15 sec.
  (7.6 — 8.8 cu in./15 sec.)
  Difference between each injector:
  Less than 10 cm^3 (0.6 cu in.)
- **Leakage**
  Fuel drop: One drop or less per minute

OK

NG **Replace injector.**

Check and replace engine control module.

IAC Valve Circuit

CIRCUIT DESCRIPTION

The IAC valve is situated on the intake air chamber Intake air bypassing the throttle valve is directed to the IAC valve through a passage.
A step motor is built into the IAC valve. It consists of 4 coils, a magnetic rotor, valve shaft and a valve.
When the current flows to the coils due to signals from the ECM, the rotor turns and moves the valve shaft forward or backward, changing the clearance between the valve and the valve seat.
In this way the intake air volume bypassing the throttle valve is regulated, controlling the engine speed.
There are 125 possible positions to which the valve can be opened.

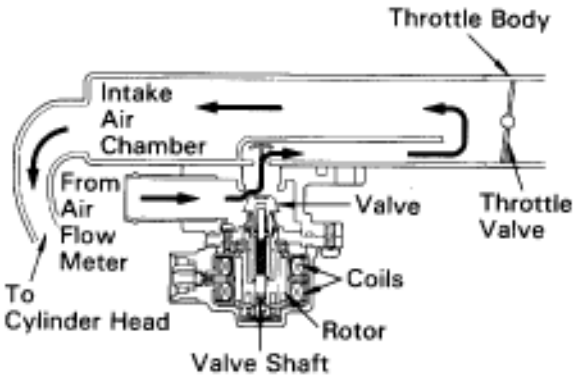

FI6973

Reference

INSPECTION USING OSCILLOSCOPE

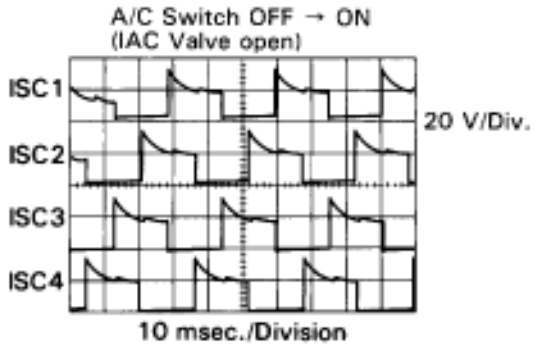

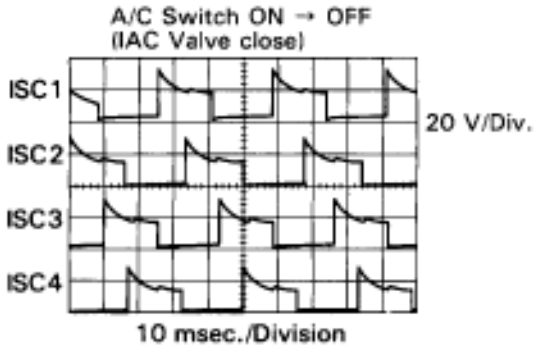

- With the engine idling measure wave forms between terminals ISC1, ISC2, ISC3, ISC4 and E01 of engine control module when A/C switch ON or OFF.

HINT:

The correct waveforms are as shown.

FI6535
FI6537

WIRING DIAGRAM

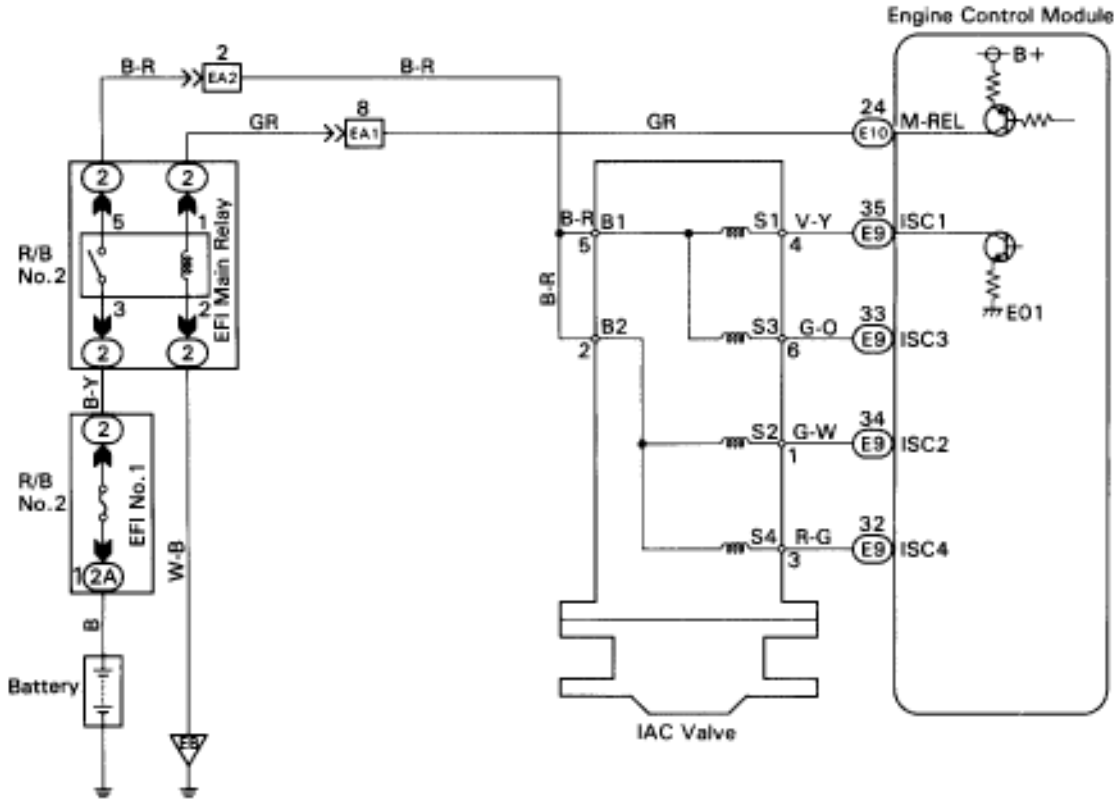

INSPECTION PROCEDURE

1 Check IAC valve.

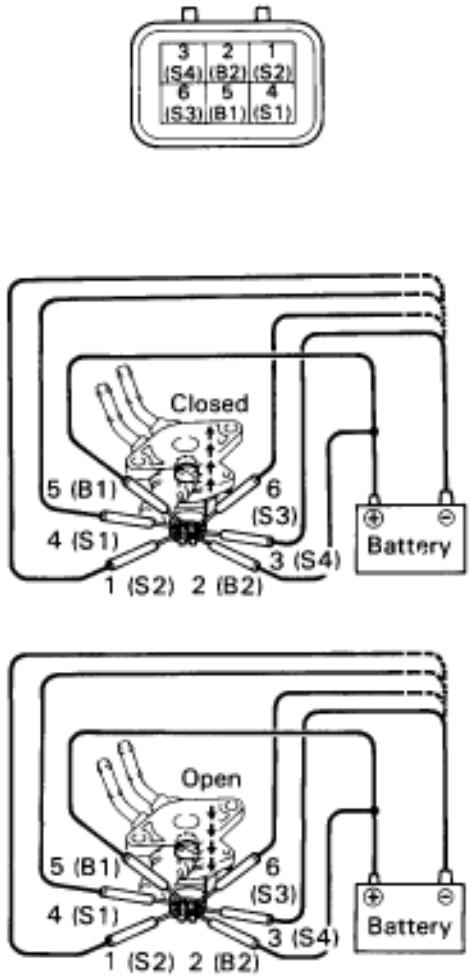

P Disconnect IAC valve connector.

C Measure resistance between terminals shown below.

OK

Terminal	Resistance
5 (B1) – 4 (S1)	10 Ω – 30 Ω
5 (B1) – 6 (S3)	10 Ω – 30 Ω
2 (B2) – 1 (S2)	10 Ω – 30 Ω
2 (B2) – 3 (S4)	10 Ω – 30 Ω

P Remove IAC Valve.

C (1) Connect the battery positive lead to terminals 5 (B1) and 2 (B2), and the negative lead to terminals 4(S1)—1(S2)—6(S3)—3(S4) in that order.
(2) Connect the battery positive lead to terminals 5 (B1) and 2 (B2) and the negative lead to terminals 3(S4)—6(S3)—1(S2)—4(S1) in that order.

OK **(1) The valve moves in the closing direction**
(2) The valve moves in the opening direction.

OK

NG **Replace IAC valve.**

2 Check for open and short in harness and connector between EFI main relay and IAC valve, IAC valve and engine control module (See page IN–30).

OK

NG **Repair or replace harness or connector.**

Proceed to next circuit inspection shown on matrix chart (See page EG–514).

Turbo Control Circuit

CIRCUIT DESCRIPTION

[HINT] This turbocharger system has 3 control valves (Exhaust Bypass Valve, Exhaust Gas Control Valve, Intake Air control Valve). Each valve is controlled by turbo pressure which is controlled by VSV based on signals from ECM.

1. **EXHAUST BYPASS VALVE**

   This valve controls the opening or closing of the exhaust bypass passage to ensure a smooth transition from 1 turbo operation to 2 turbo operation.

2. **EXHAUST GAS CONTROL VALVE**

   This valve controls the opening or closing of the No.2 exhaust passage in order to operate No.2 turbocharger.

3. **INTAKE AIR CONTROL VALVE**

   This valve controls the opening or closing of the No.2 intake air passage in order to pass the charged air from No.2 turbocharger.

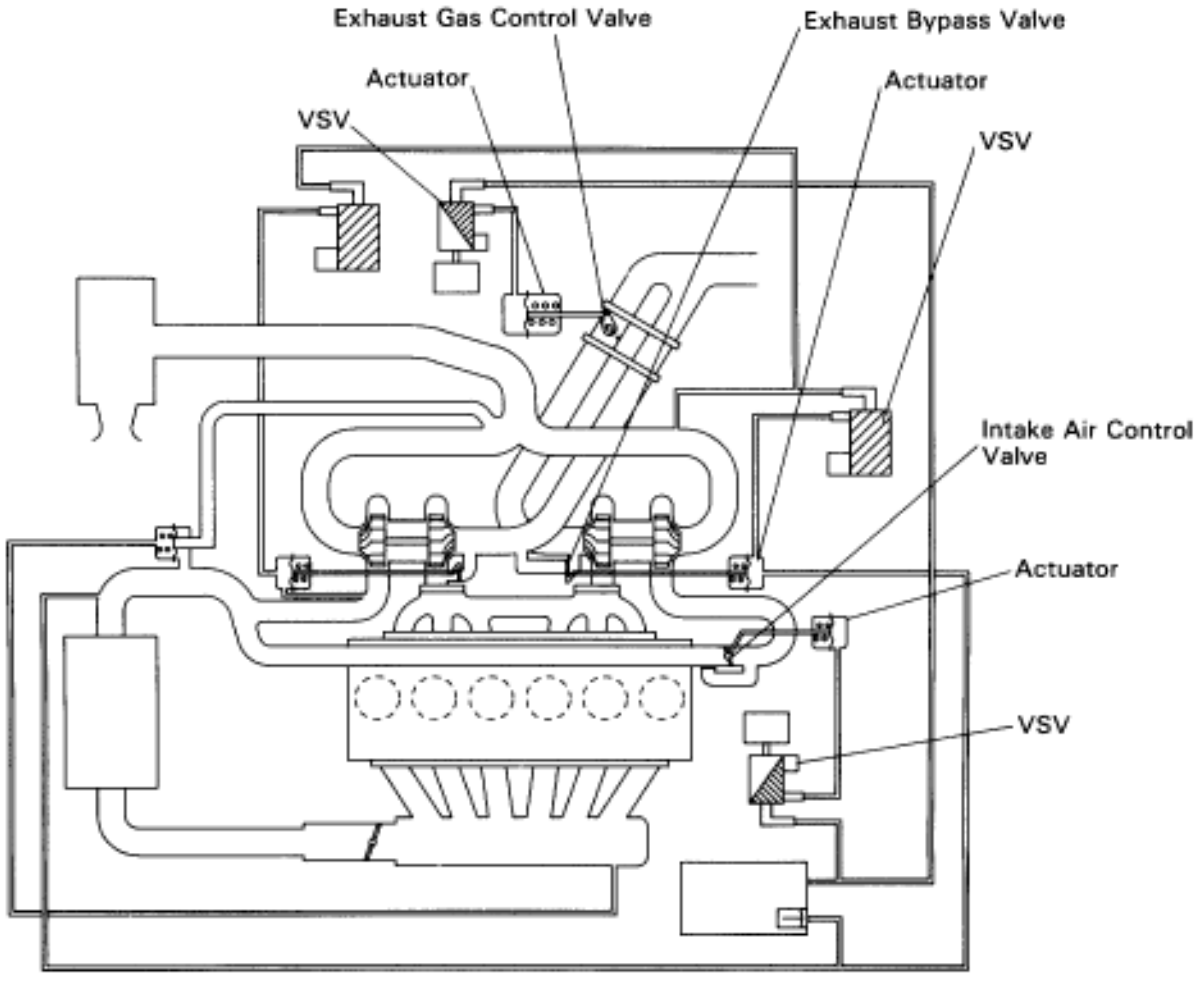

FI6965

WIRING DIAGRAM

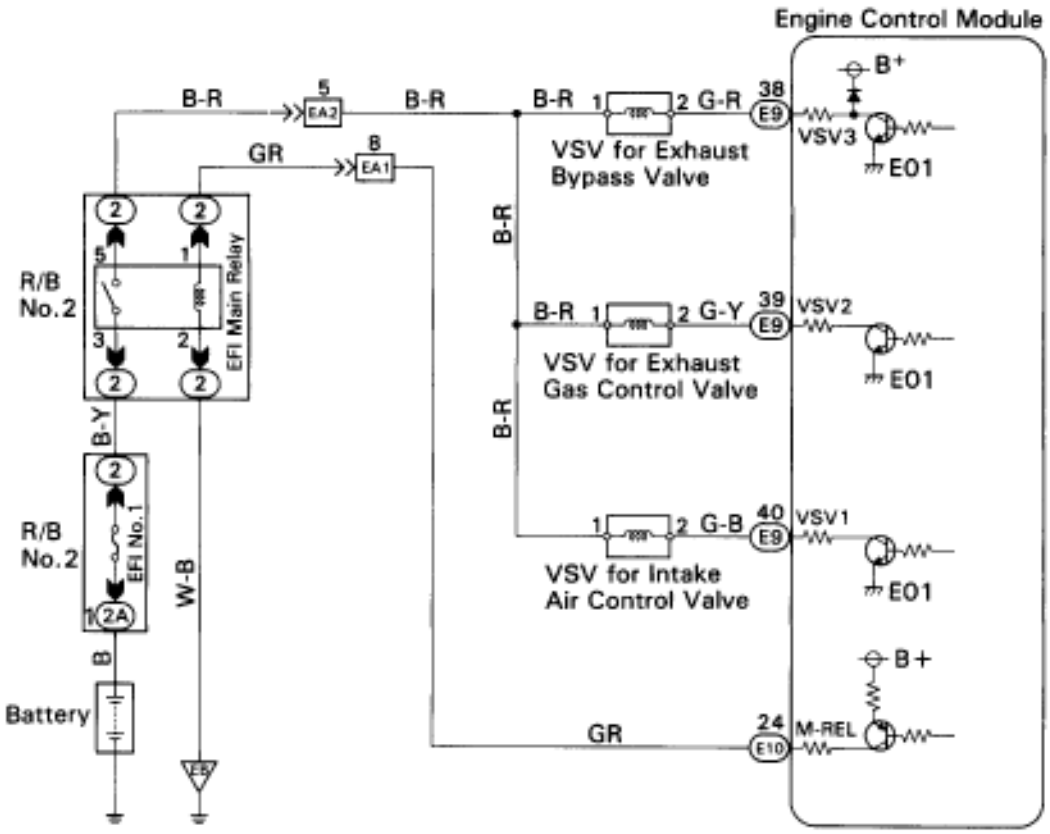

FI6957

INSPECTION PROCEDURE

1 Check VSV for Exhaust Bypass Valve

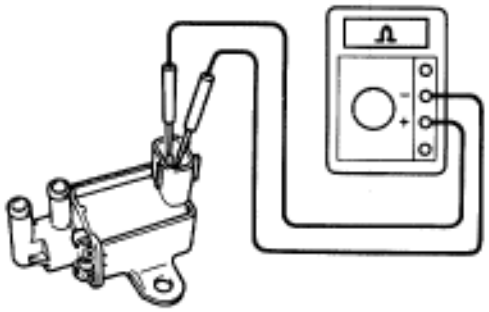

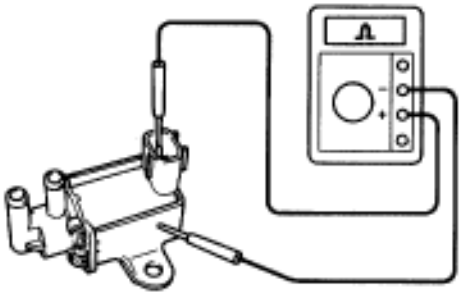

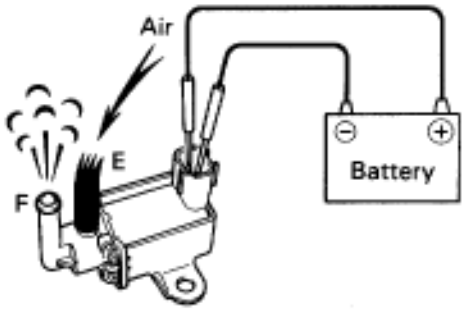

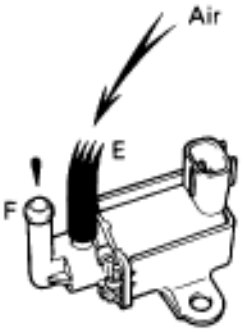

P11374
P11375
P11377
P11376

P
(1) Remove VSV.
(2) Disconnect VSV connector.

C
(1) Measure resistance between terminals.
(2) Measure resistance between each terminal and the body.

OK
(1) Resistance: 22 —26 at 20˚C (68˚F)
(2) Resistance: 1 M or higher

C
Check operation of VSV when battery positive voltage is applied and released to the VSV terminals.

OK
Battery positive voltage is applied:
Air from port E is flowing out through port F.

Battery positive voltage is not applied:
Closed air passage from port E to F.

OK

NG → **Replace VSV for exhaust bypass valve.**

2 Check VSV for Exhaust Gas Control Valve

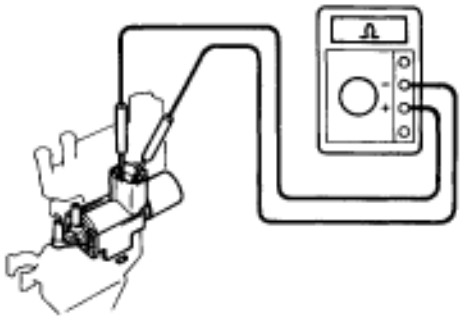

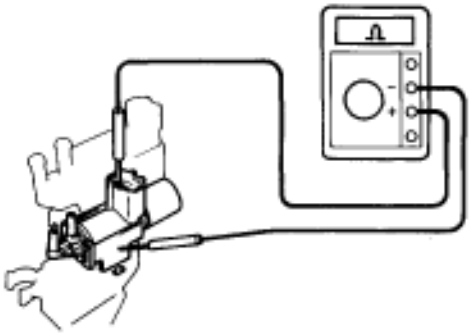

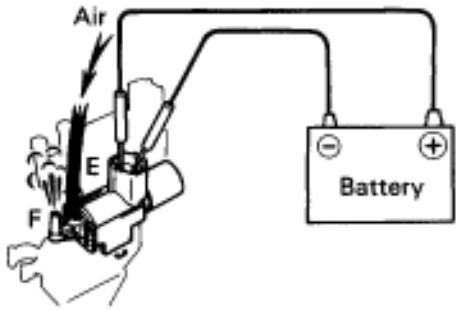

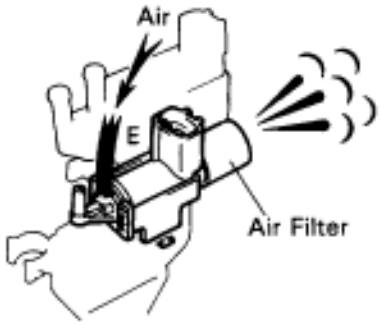

P11382
P11383
P11384
P11415

P (1) Remove VSV.
(2) Disconnect VSV connector.

C (1) Measure resistance between terminals.
(2) Measure resistance between each terminal and the body.

OK **(1) Resistance: 38 — 44 at 20°C (68°F)**
(2) Resistance: 1 M or higher

C Check operation of VSV when battery positive voltage is applied and released to the VSV terminals.

OK **Battery positive voltage is applied:**
Air from port E is flowing out through port F.

Battery positive voltage is not applied:
Air from port E is flowing out through the air filter.

OK

NG **Replace VSV for exhaust gas control valve.**

3 Check VSV for Intake Air Control Valve

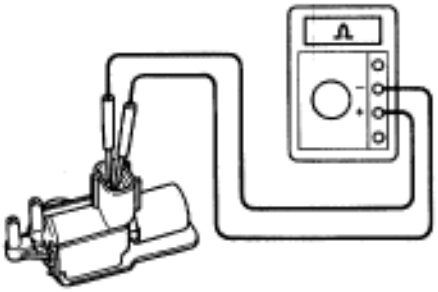

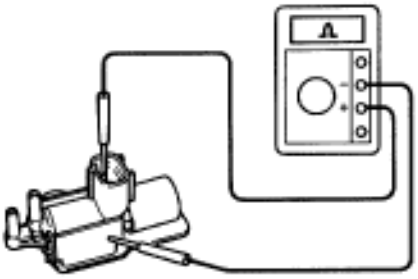

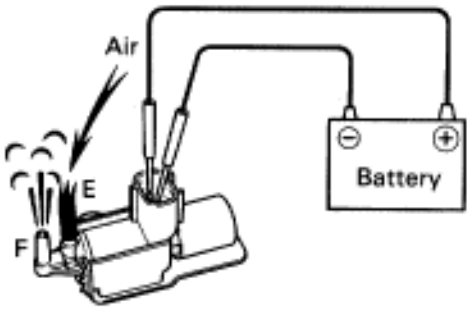

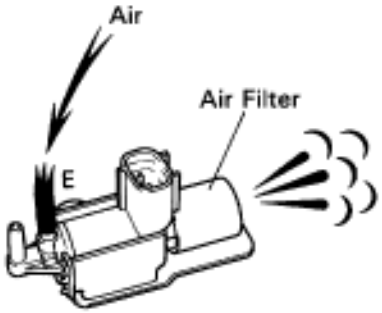

P11371
P11372
P11373
P11414

P
(1) Remove VSV.
(2) Disconnect VSV connector.

C
(1) Measure resistance between terminals.
(2) Measure resistance between each terminal and the body.

OK
(1) Resistance: 38.5 — 44.5 at 20°C (68°F)
(2) Resistance: 1 M or higher

C
Check operation of VSV when battery positive voltage is applied and released to the VSV terminals.

OK
Battery positive voltage is applied:
Air from port E is flowing out through port F.

Battery positive voltage is not applied:
Air from port E is flowing out through the air filter.

OK

NG → **Replace VSV for intake gas control valve.**

4 **Check voltage between terminal VSV1, VSV2, VSV3 of engine control module connector and body ground.**

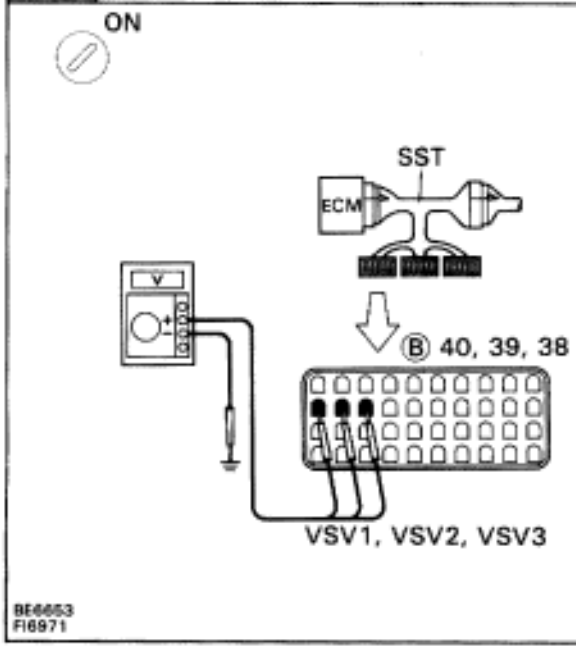

P (1) Connect SST (check harness “A”).
(See page EG–510)
(2) Turn ignition switch ON.

C Measure voltage between terminal VSV1, VSV2, VSV3 of engine control module connector and body ground.

OK **Voltage: 9 — 14 V**

NG

OK → **Check actuator. (See page EG–144, 158)**

5 **Check for open and short in harness and connector between EFI main replay and engine control module (See page IN–30).**

OK

NG → **Repair or replace harness or connector.**

Check and replace engine control module.

VSV Circuit for Fuel Pressure Control

CIRCUIT DESCRIPTION

The ECM turns on a VSV (Vacuum Switching Valve) to draw air into the diaphragm chamber of the pressure regulator if it detects that the temperature of the engine coolant is too high during engine starting.
The air drawn into the chamber increases the fuel pressure to prevent fuel vapor lock at high engine temperature in order to help the engine start when it is warm.
Fuel pressure control ends approx. 120 sec. after the engine is started.

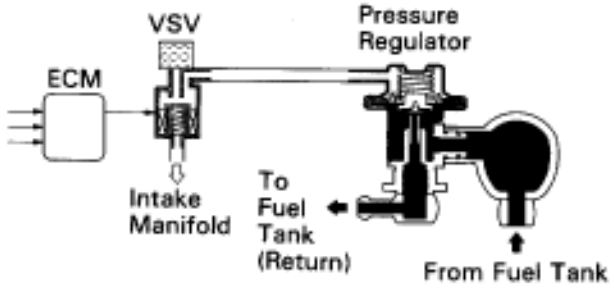

FI6969

WIRING DIAGRAM

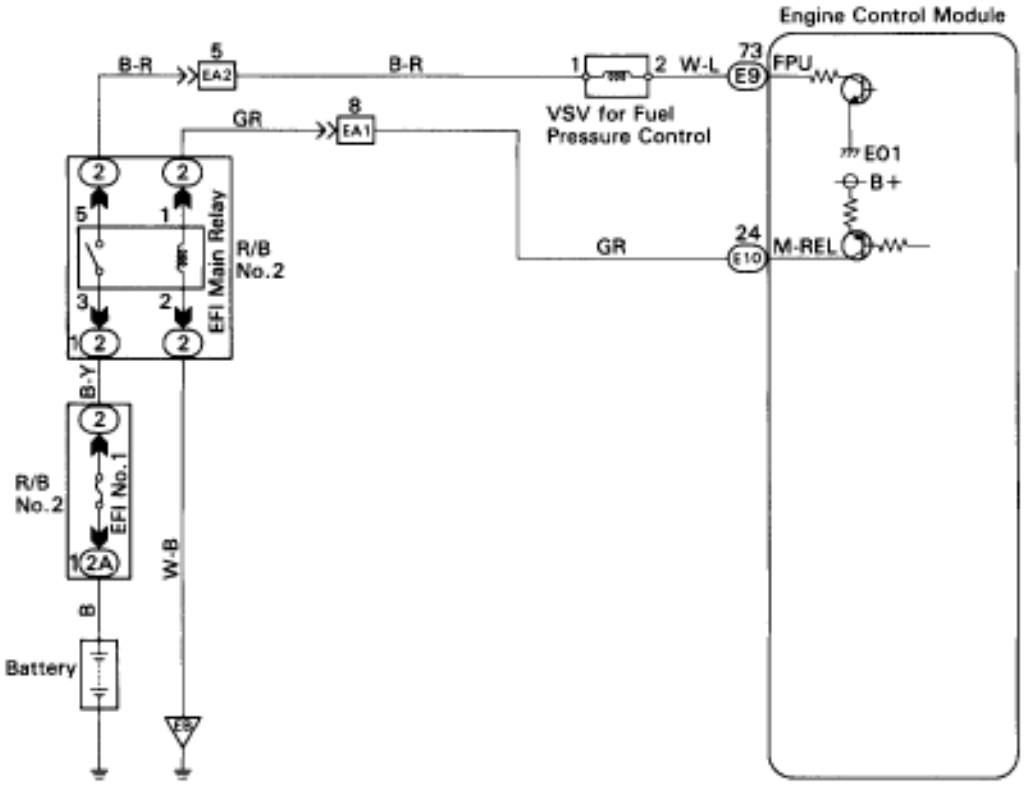

FI6938

INSPECTION PROCEDURE

1 Check VSV for fuel pressure control.

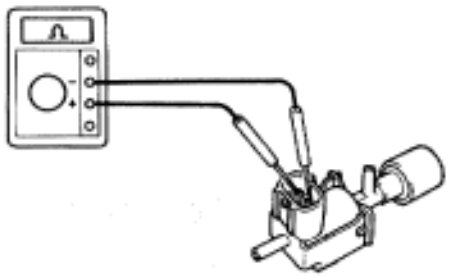

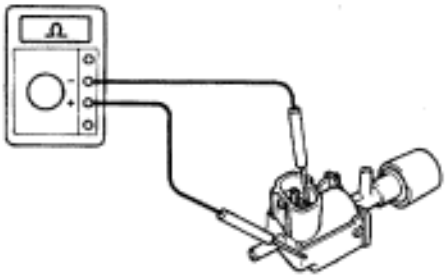

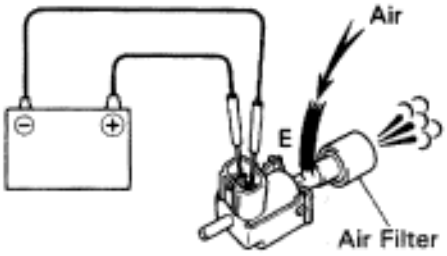

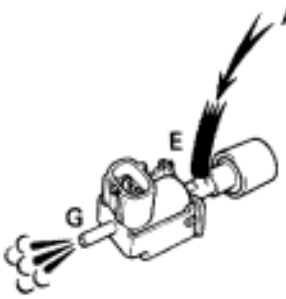

P11340
P11341
P11343
P11342

P
(1) Remove VSV.
(2) Disconnect VSV connector.

C
(1) Measure resistance between terminals.
(2) Measure resistance between each terminal and the body.

OK
(1) Resistance: 33 — 39 at 20°C (68°F)
(2) Resistance: 1 M or higher

C
Check operation of VSV when battery positive voltage is applied and released to the VSV terminals.

OK
Battery positive voltage is applied:
Air from port E is flowing out through the air filter.

Battery positive voltage is not applied:
Air from port E is flowing out through port G.

OK

NG → **Replace VSV for fuel pressure control.**

2 **Check voltage between terminal FPU of engine control module connector and body ground.**

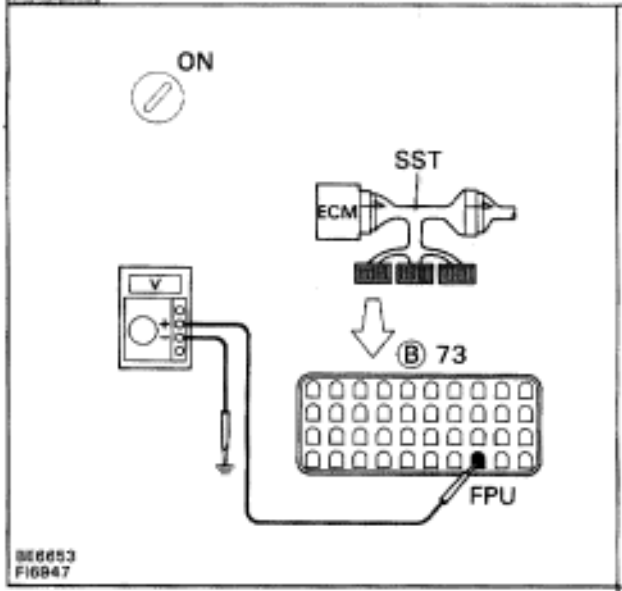

P (1) Connect SST (check harness “A”).
(See page EG–510)
SST 09990–01000
(2) Turn ignition switch ON.

C Measure voltage between terminal FPU of engine control module connector and body ground.

OK **Voltage: 9 — 14 V**

NG

OK → **Proceed to next circuit inspection shown on matrix chart (See page Eg–514).**

3 **Check for open and short in harness and connector between engine control module and VSV, VSV and EFI main relay (See page IN–30).**

OK

NG → **Repair or replace harness or connector.**

Check and replace engine control module.

TE1 TE2 Terminal Circuit

CIRCUIT DESCRIPTION

Terminal TE1 is located in data link connectors 1 and 2. Terminal TE2 is located ONLY in data link connector 2.

The data link connector 1 is located in the engine compartment and the data link connector 2 is located in the cabin. When these terminals are connected with the E1 terminal, diagnostic trouble codes in normal mode or test mode can be read from the malfunction indicator lamp on the telltale light RH.

WIRING DIAGRAM

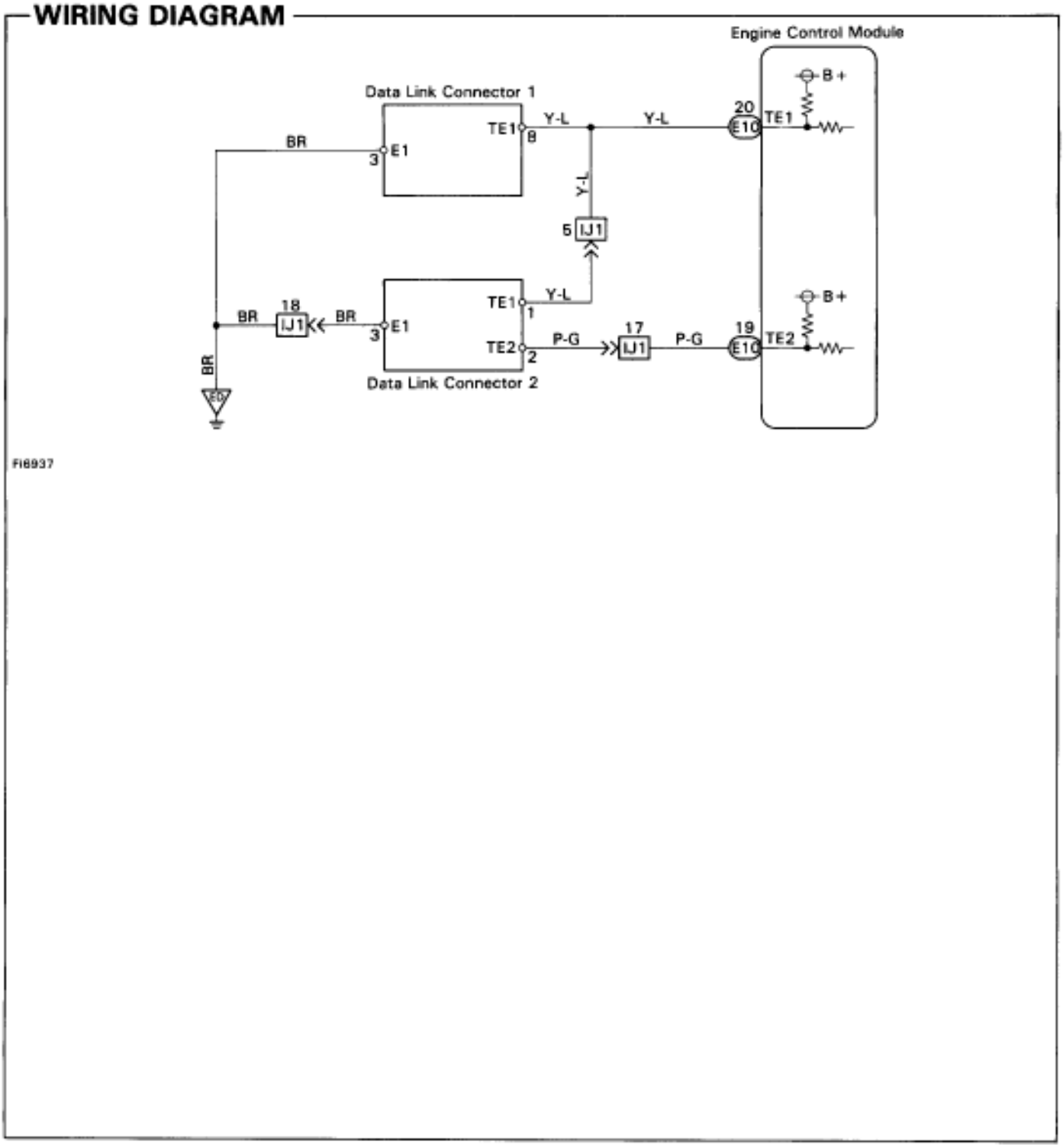

INSPECTION PROCEDURE

HINT: If terminals TE1 and TE2 are connected with terminal E1, diagnostic trouble code is not output or test mode is not activated.
Even though terminal TE1 is not connected with terminal E1, the malfunction indicator lamp blinks.
For the above phenomenon, the likely cause is an open or short in the wire harness, or malfunction inside the ECM.

1 **Check voltage between terminals TE1, TE2 and E1 of data link connectors 1 and 2.**

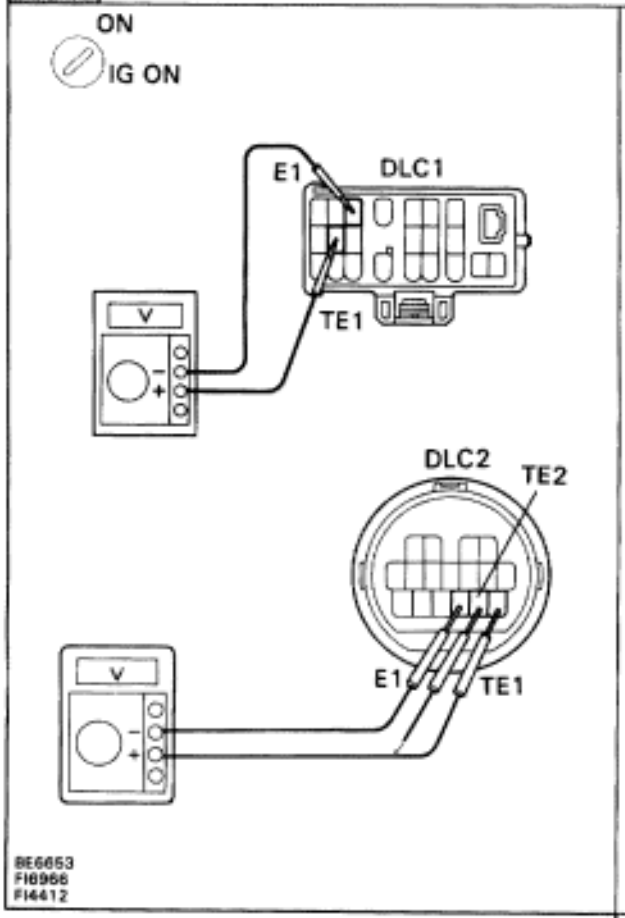

P Turn ignition switch ON.

C (1) For DLC1, measure voltage between terminal TE1 and E1.
(2) For DLC2 measure voltage between terminals TE1, TE2 and E1.

OK **Voltage: 9 — 14 V**

NG → OK: **Check and replace engine control module.**

2 **Check continuity between terminal E1 of data link connectors 1, 2 and body ground.**

OK → NG: **Repair or replace harness or connector.**

3 **Check for open and short in harness and connector between engine control module and data link connectors 1, 2 (See page IN–30).**

OK → NG: **Repair or replace harness or connector.**

Check and replace engine control module.

TURBOCHARGER SYSTEM (2JZ–GTE)

PREPARATION
SST (SPECIAL SERVICE TOOLS)

	09992–00241 Turbocharger Pressure Gauge	

EQUIPMENT

Dial indicator	Impeller wheel
Torque wrench	

COOLANT

Item		Capacity	Classification
Engine coolant (w/ Heater)	M/T	9.5 liters (10.0 US qts. 8.4 lmp. qts)	Ethylene–glycol base
	A/T	9.4 liters (9.9 US qts, 8.3 lmp. qts)	

PRECAUTION

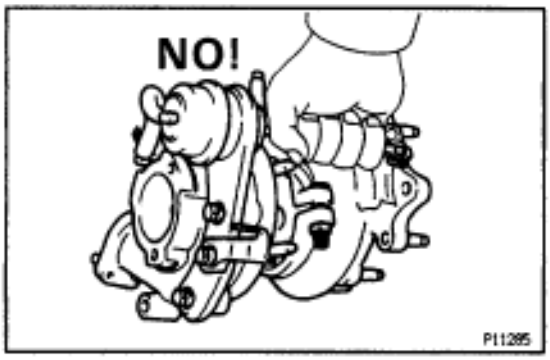

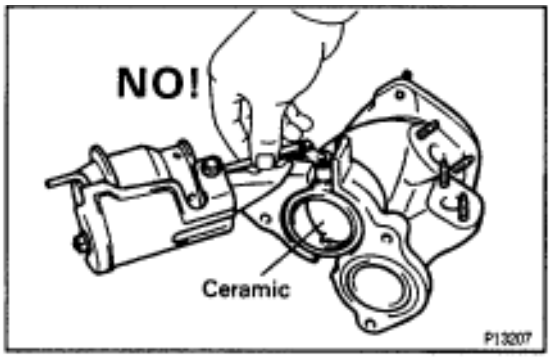

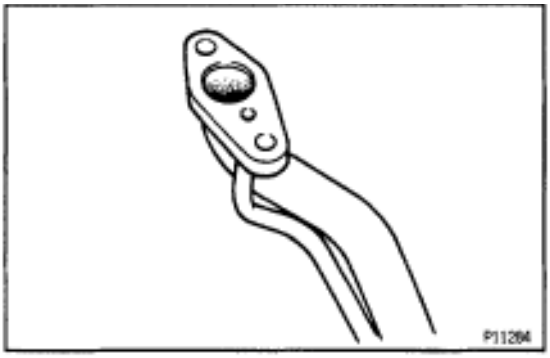

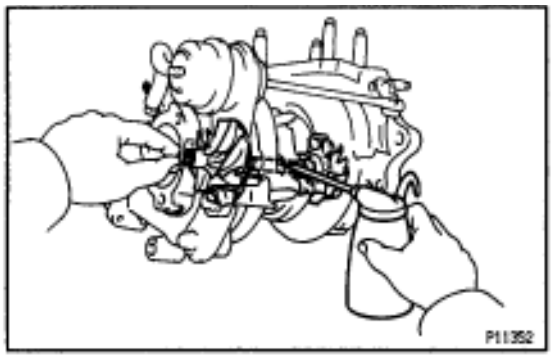

1. **Do not stop the engine immediately after pulling a trailer or after high speed or uphill driving. Idle the engine for 20–120 seconds, depending on how hard the vehicle has been driven.**
2. **Avoid sudden acceleration or racing immediately after starting a cold engine.**
3. **Do not run the engine with air cleaner removed, as this may cause foreign material to enter and damage the impeller wheel operating at high speed.**
4. **If a turbocharger is found to be defective and must be replaced, check for the cause, and repair or replace the following items as necessary:**
   - **Engine oil level and quality**
   - **Conditions under which the turbocharger was used**
   - **Oil lines leading to the turbocharger**
5. **Use caution when removing and reinstalling the turbocharger assembly. Do not drop it or knock it against anything or grasp it by easily–deformed parts, such as the actuator or rod, when moving it.**
6. **Use caution when removing and reinstalling the exhaust gas control valve assembly. Do not drop it or knock it against anything or grasp it by easily–deformed parts, such as the actuator or rod, when moving it. The control valve is ceramic.**
7. **Before removing the turbocharger, plug the intake and exhaust ports and oil inlet to prevent entry of dirt or other foreign material.**
8. **If replacing the turbocharger, check for accumulation of sludge particles in the oil pipes, and if necessary, replace the oil pipes.**
9. **Completely remove the gasket adhered to the lubrication oil pipe flange and turbocharger oil flange.**
10. **When replacing bolt or nuts, use only authorized replacement parts to prevent breakage or deformation.**
11. **If replacing the turbocharger, pour approx. 20 cm^3 (1.2 cu in.) of fresh oil into the turbocharger oil inlet and turn the impeller wheel by hand to spread oil to the bearing.**
12. **If overhauling or replacing the engine, cut the fuel supply after reassembly and crank the engine for 30 seconds to distribute oil throughout the engine. Then allow the engine to idle for 60 seconds.**

TROUBLESHOOTING

HINT: Before troubleshooting the turbocharger, first check the engine itself. (Valve clearance, engine compression, ignition timing etc.)

INSUFFICIENT ACCELERATION, LACK OF POWER OR EXCESSIVE FUEL CONSUMPTION

(Possible Cause)	Check Procedure and Correction Method)
1. TURBOCHARGING PRESSURE TOO LOW	Check turbocharging pressure. (See page EG–144) **Turbocharging pressure:** **61–75 kPa** **(062–0.76 kgf/cm^2, 8.8–10.8 psi)** If the pressure is below specifications, begin diagnosis from item 2.
2. RESTRICTED INTAKE SYSTEM	Check intake air system, and repair or replace parts as necessary. (See page EG–144)
3. LEAK IN INTAKE AIR SYSTEM	Check intake air system, and repair or replace parts as necessary. (See page EG–144)
4. RESTRICTED EXHAUST SYSTEM	Check intake air system, and repair or replace parts as necessary. (See page EG–144)
5. LEAK IN EXHAUST SYSTEM	Check intake air system, and repair or replace parts as necessary. (See page EG–144)
6. ERRATIC TURBOCHARGER OPERATION	Check rotation of turbine shaft. If it does not turn or turns with a heavy drag, replace the turbocharger assembly. Check axial and radial play of turbine shaft. (See page EG–158) Maximum axial play : 0.110 mm (0.0045 in.) Maximum radial play : 0.162 mm (0.0064 in.) If the play is greater than maximum, replace the turbocharger assembly.

ABNORMAL NOISE

(Possible Cause)	(Check Procedure and Correction Method)
1. TURBOCHARGING HEAT INSULATOR RESONANCE	Check for loose, improperly installed or deformed insulator mounting bolts, and repair or replace as necessary.
2. EXHAUST PIPE LEAKING OR VIBRATING	Check for deformed exhaust pipe, loose mounting bolts or damaged gasket, and repair or replace as necessary.
3. ERRATIC TURBOCHARGER OPERATION	Refer to item 6 of INSUFFICIENT ACCELERATION, LACK OF POWER OR EXCESSIVE FUEL CONSUMPTION.

EXCESSIVE OIL CONSUMPTION OR WHITE EXHAUST

(Possible Cause)	(Check Procedure and Correction Method)
FAULTY TURBOCHARGER SEAL	Check for oil leakage in exhaust system. • Remove the turbine elbow from the turbocharger and check for excessive carbon deposits on the turbine wheel. Excessive carbon deposits indicate a faulty turbocharger. Check for oil leakage in intake air system. • Check for axial and radial play of turbine shaft and replace the turbocharger if necessary. (See page EG–158) Maximum axial play : 0.110 mm (0.0045 in.) Maximum radial play : 0.162 mm (0.0064 in.) **NOTICE: Some oil mist in the blowby from the PCV is normal.** **Do not mistake it for an oil leak from the turbocharger.**

TURBOCHARGER
On–Vehicle Inspection

1. INSPECT INTAKE AIR SYSTEM

Check for leakage or clogging between the air cleaner and turbocharger inlet and between the turbocharger outlet and cylinder head.

- Clogged air cleaner .... Clean or replace air filter
- Hoses collapsed or deformed .... Repair or replace
- Leakage from connections .... Check each connection and repair
- Cracks in components Check and replace

2. INSPECT EXHAUST SYSTEM

Check for leakage or clogging between the cylinder head and turbocharger inlet and between the turbocharger outlet and exhaust pipe.

- Deformed components Repair or replace
- Foreign material in passages Remove
- Leakage from components Repair or replace
- Cracks in components Check and replace

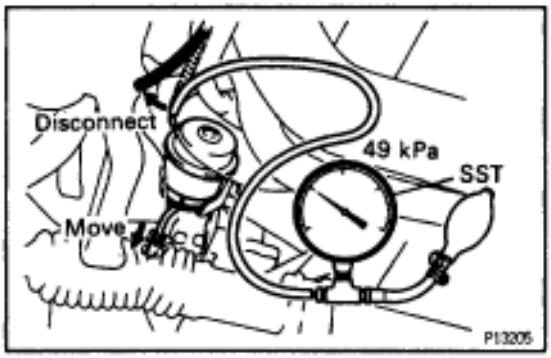

3. INSPECT EXHAUST EXHAUST GAS CONTROL VALVE OPERATION

(a) Disconnect the air hose from the actuator.

(b) Using SST, apply approx. 49 kPa (0.50 kgf/cm^2, 7.1 psi) of pressure to the actuator.
SST 09992–00241

(c) Check that the actuator push rod moves.

(d) Reconnect the air hose to the actuator.

If operation is not as specified, replace the control valve assembly.

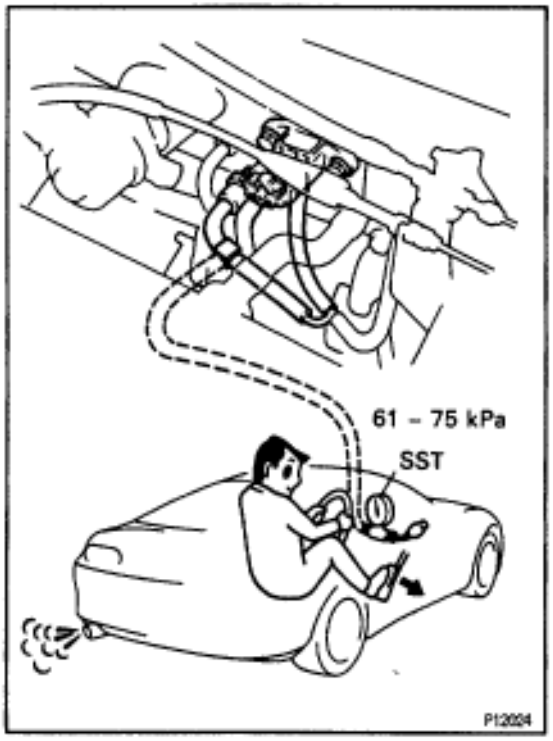

4. INSPECT TURBOCHARGING PRESSURE

(a) Using a 3–way connector, connect SST (turbocharger pressure gauge) to the hose between the gas filter and turbo pressure sensor.
SST 09992–00241

(b) While driving with the engine running at 5,600 rpm or more with the throttle valve fully open in the 1st gear/ L range, check the turbocharging pressure.

Standard pressure:

61–75 kPa (0.62–0.76 kgf/cm^2, 8.8–10.8 psi)

If the pressure is less than that specified, check the intake and exhaust systems for leakage. If there is no leakage, replace the turbocharger assembly.

If the pressure is above specification, check if the actuator hose is disconnected or cracked. If not, replace the turbocharger assembly.

VSV for Intake Air Control Valve

(See SFI System)

VSV for Waste Gate Valve

(See SFI System)

VSV for Exhaust Gas Control Valve

(See SFI System)

VSV for Exhaust Bypass Valve

(See SFI System)

Turbo Pressure Sensor

(See SFI System)

Pressure Tank
COMPONENTS FOR REMOVAL AND INSTALLATION

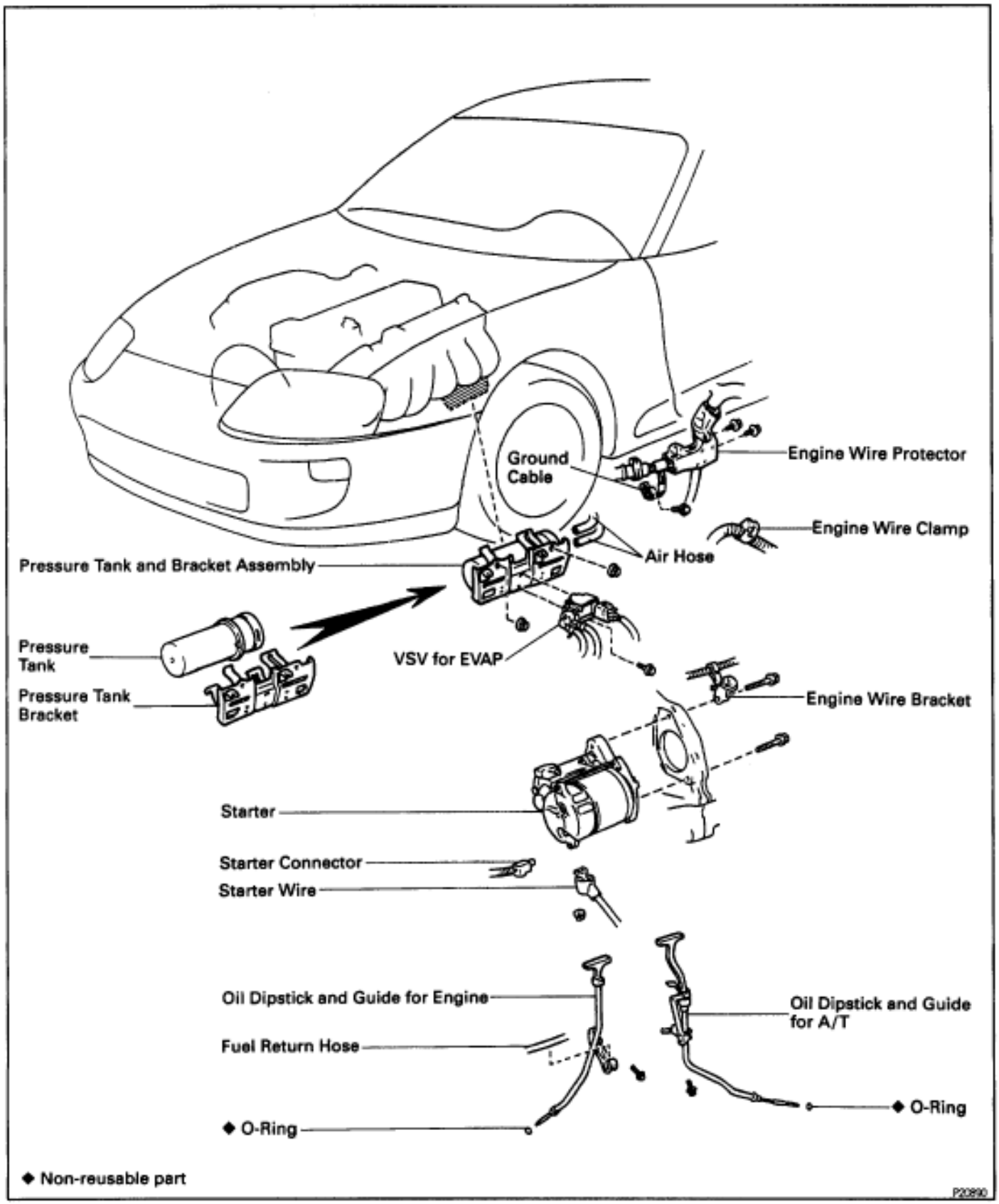

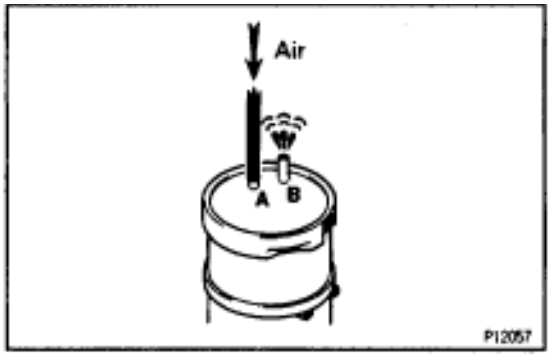

PRESSURE TANK INSPECTION

1. REMOVE PRESSURE TANK

2. INSPECT PRESSURE TANK

(a) Check that air flows from port A to B.

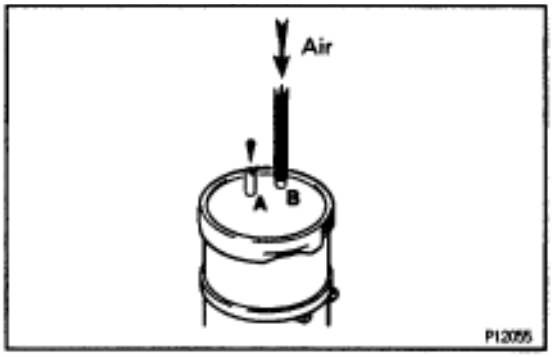

(b) Check that air does not flow from port B to A.

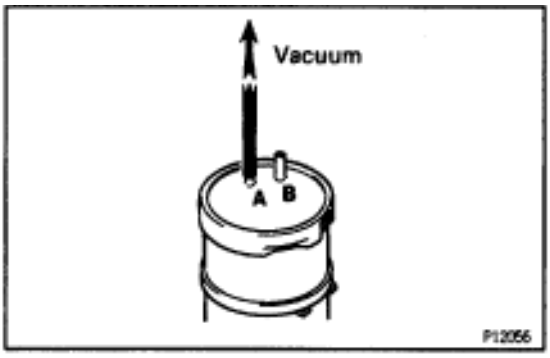

(c) Apply 60.0 kPa (450 mmHg, 17.72 in.Hg) of vacuum to port A, and check that there is no change in vacuum after 1 minute.
If operation is not as specified, replace the pressure tank.

3. REINSTALL PRESSURE TANK

Turbocharger
COMPONENTS FOR REMOVAL AND INSTALLATION

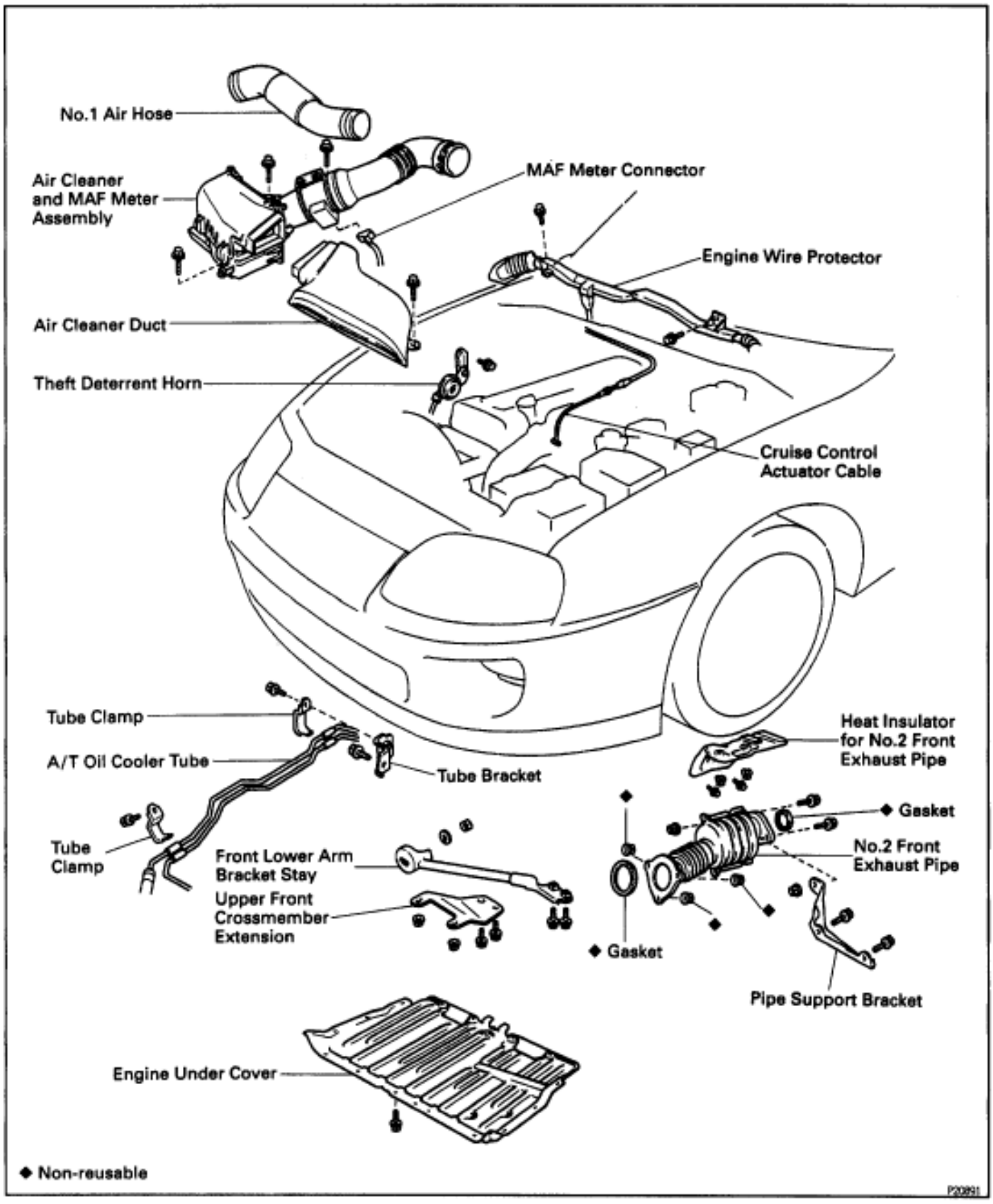

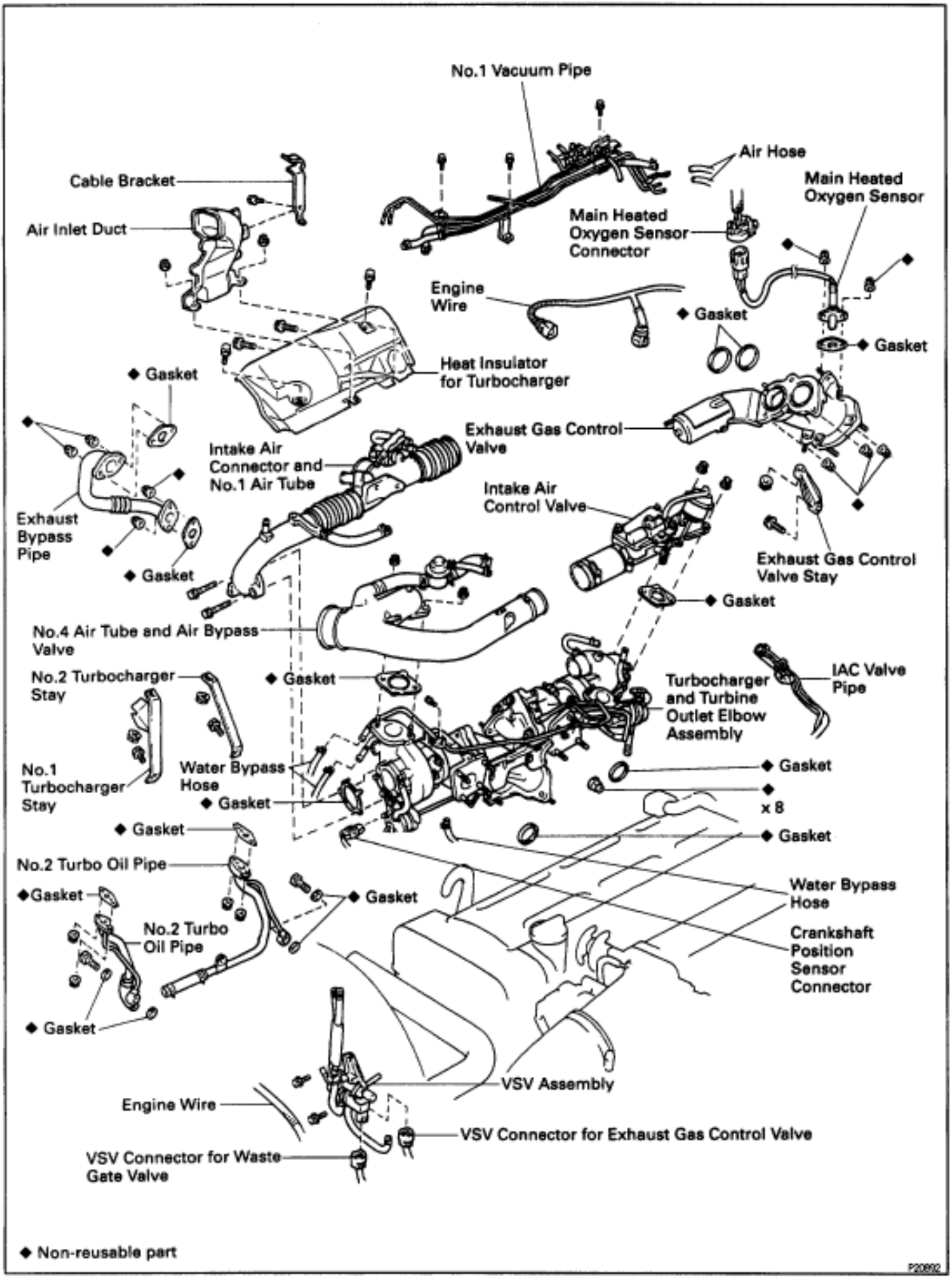
No.1 Vacuum Pipe
Air Hose
Cable Bracket
Main Heated Oxygen Sensor
Air Inlet Duct
Main Heated Oxygen Sensor Connector
Engine Wire
◆ Gasket
◆ Gasket
Heat Insulator for Turbocharger
◆ Gasket
Exhaust Gas Control Valve
Intake Air Connector and No.1 Air Tube
Intake Air Control Valve
Exhaust Bypass Pipe
Exhaust Gas Control Valve Stay
◆ Gasket
◆ Gasket
No.4 Air Tube and Air Bypass Valve
No.2 Turbocharger Stay
◆ Gasket
Turbocharger and Turbine Outlet Elbow Assembly
IAC Valve Pipe
No.1 Turbocharger Stay
Water Bypass Hose
◆ Gasket
◆ Gasket
◆ x 8
◆ Gasket
◆ Gasket
No.2 Turbo Oil Pipe
Water Bypass Hose
◆ Gasket
◆ Gasket
No.2 Turbo Oil Pipe
Crankshaft Position Sensor Connector
◆ Gasket
VSV Assembly
Engine Wire
VSV Connector for Exhaust Gas Control Valve
VSV Connector for Waste Gate Valve
◆ Non-reusable part

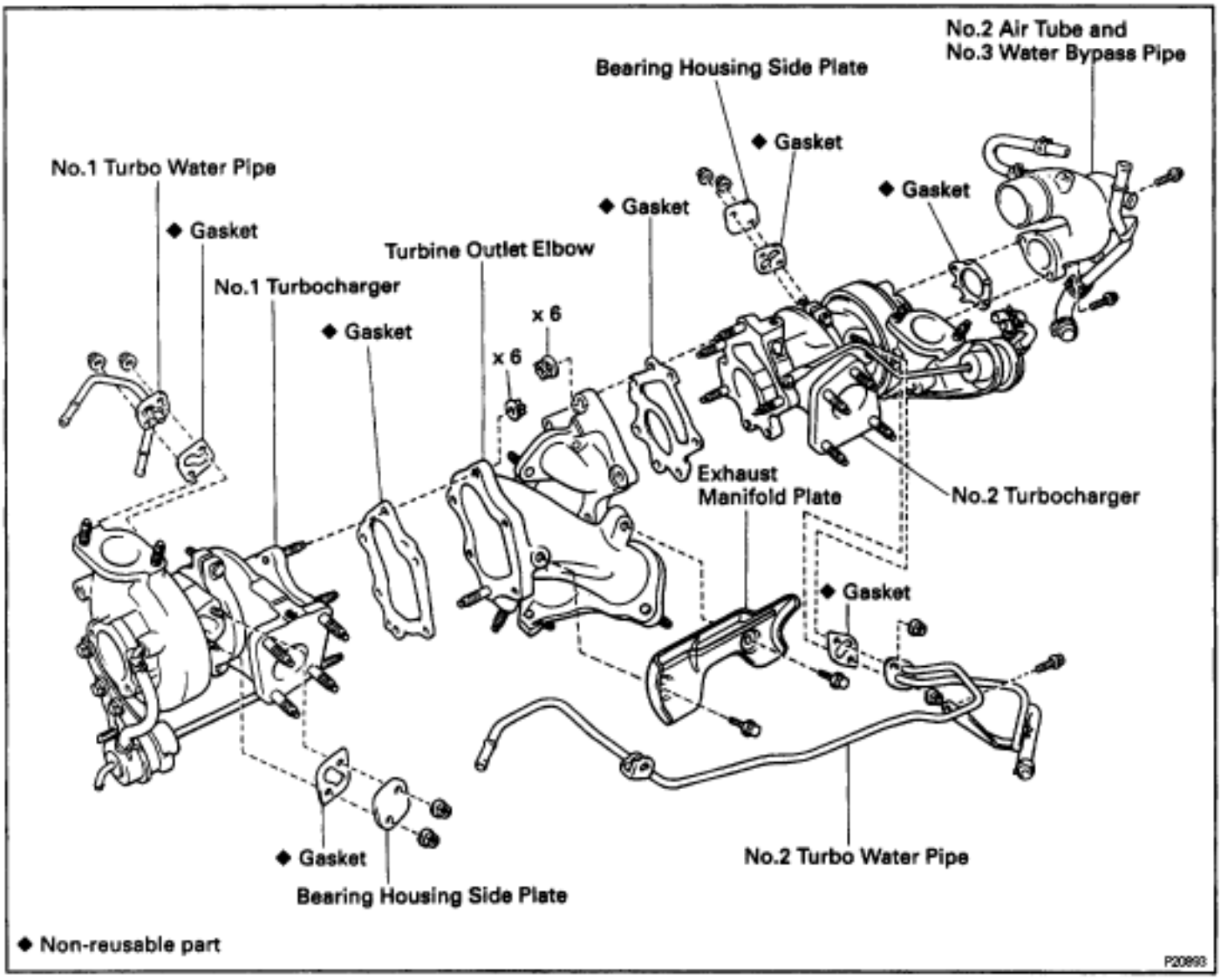

TURBOCHARGER REMOVAL

Installation is in the reverse order of removal.

1. **DRAIN ENGINE COOLANT**
2. **REMOVE ENGINE UNDER COVER**
3. **DISCONNECT CRUISE CONTROL ACTUATOR CABLE FROM THROTTLE BODY**
4. **REMOVE NO.1 AIR HOSE**
5. **REMOVE AIR CLEANER DUCT**

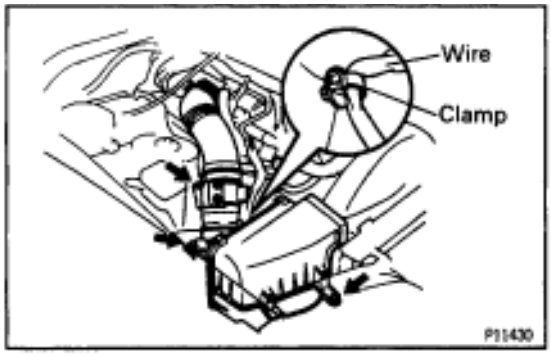

6. **REMOVE AIR CLEANER AND MAF METER ASSEMBLY**

(a) Remove the 3 bolts.

(b) Loosen the hose clamp, disconnect the air hose from the intake air connector.

(c) Disconnect the MAF meter wire from the clamp on the air cleaner case.

(d) Disconnect the MAF meter connector, and remove the air cleaner and MAF meter assembly.

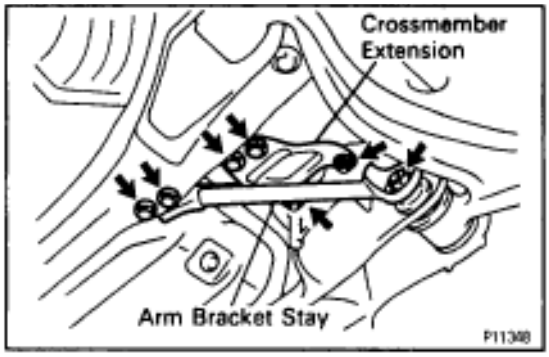

7. DISCONNECT THEFT DETERRENT HORN FROM BODY

8. REMOVE FRONT LOWER ARM BRACKET STAY

Remove the 2 bolts, nut, plate washer and arm bracket stay.

Torque:

Bolts

44 N·m (450 kgf·cm, 33 ft·lbf)

Nut

59 N·m (600 kgf·cm, 43 ft·lbf)

9. REMOVE UPPER FRONT CROSSMEMBER EXTENSION

Remove the 2 bolts, 2 nuts and crossmember extension.

Torque:

Bolts

29 N·m (300 kgf·cm, 22 ft·lbf)

Nuts

33 N·m (340 kgf·cm, 25 ft·lbf)



10. REMOVE NO.2 FRONT EXHAUST PIPE

(a) Remove the 2 bolts and nuts holding the front exhaust pipe to the No.2 front exhaust pipe.
Torque: 58 N·m (590 kgf·cm, 43 ft·lbf)

(b) Remove the 2 bolts and pipe support bracket.
Torque: 43 N·m (440 kgf·cm, 32 ft·lbf)

(c) Disconnect the front exhaust pipe from the No.2 exhaust pipe. Remove the gasket.
INSTALLATION HINT: Use a new gasket.

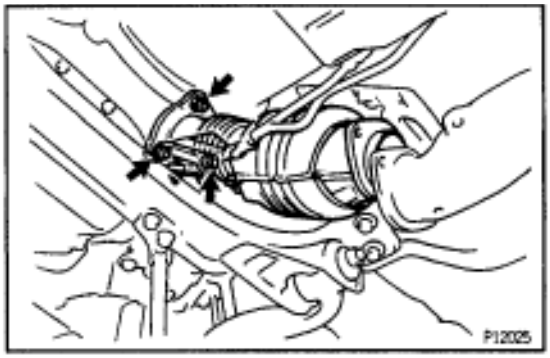

(d) Remove the 3 nuts, No.2 front exhaust pipe and gasket.
INSTALLATION HINT: Use a new gasket and 3 new nuts.
Torque: 62 N·m (630 kgf·cm, 46 ft·lbf)

11. REMOVE HEAT INSULATOR FOR NO.2 FRONT EXHAUST PIPE

Remove the 2 bolts, 2 nuts and heat insulator.

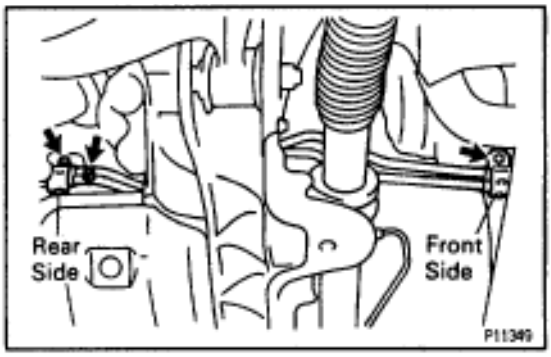

12. DISCONNECT A/T OIL COOLER TUBES FROM ENGINE

(a) Remove the bolt and tube clamp, and disconnect the oil cooler tubes from the bracket (front side) on the generator.

(b) Remove the bolt and tube clamp, and disconnect the oil cooler tubes from the bracket (rear side) on the cylinder block.

(c) Remove the bolt and tube bracket (rear side) from the cylinder block.

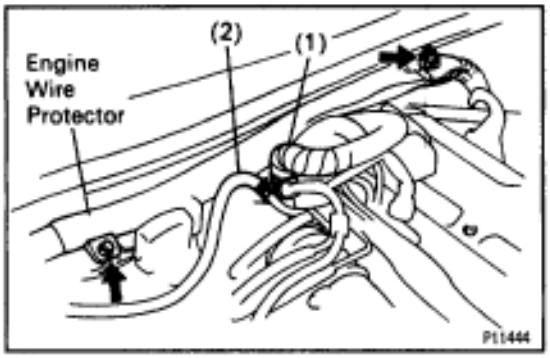

13. DISCONNECT ENGINE WIRE PROTECTOR FROM BODY

Remove the 2 bolts, and disconnect the wire protector from the body.

14. DISCONNECT HOSES

Disconnect these hoses:

(1) Heater hose from No.3 water bypass pipe
(2) EVAP hose from No.1 vacuum pipe

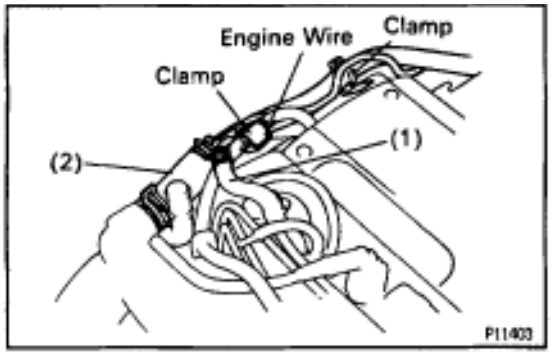

15. DISCONNECT IAC VALVE PIPE FROM NO.2 AIR TUBE

(a) Disconnect the engine wire from the clamp.
(b) Disconnect these hoses:
(1) Air hose (from No.1 vacuum pipe) from IAC valve pipe
(2) Air hose from No.2 air tube
(c) Disconnect the IAC valve pipe from the clamp.

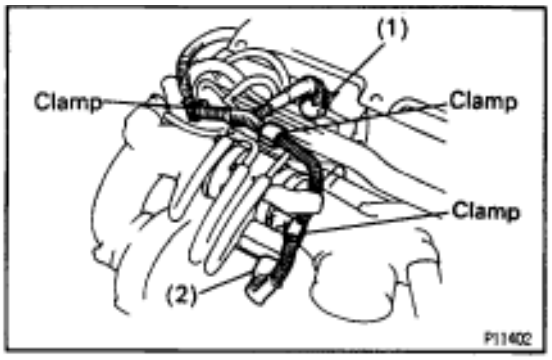

16. DISCONNECT NO.1 VACUUM PIPE FROM AIR TUBES

(a) Disconnect these connectors:
(1) VSV connector for intake air control valve
(2) VSV connector for exhaust bypass valve
(b) Disconnect the engine wire from the 3 clamps.

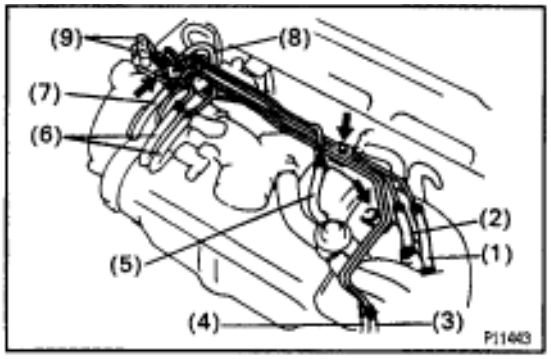

(c) Disconnect these hoses:
(1) Air hose from No.4 air tube
(2) Air hose from No.1 air tube
(3) Air hose (from VSV for waste gate valve) from vacuum pipe
(4) Air hose (from VSV for exhaust gas control valve) from vacuum pipe
(5) Vacuum hose (from air bypass valve) from No.1 air tube
(6) 2 air hoses (from VSV for exhaust bypass valve) from vacuum pipe
(7) Air hose (from No.2 air tube) from vacuum pipe
(8) Air hose from VSV for intake air control valve
(9) 2 air hoses (from pressure tank) from vacuum pipe
(d) Remove the 3 bolts, and disconnect the vacuum pipe from the air tubes.

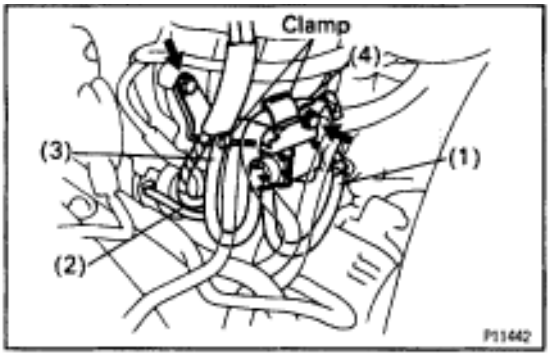

17. REMOVE VSV ASSEMBLY

(a) Disconnect these hoses:
  (1) Air hose from actuator for waste gate valve
  (2) Air hose from actuator for exhaust gas control valve
  (3) Air hose from hose clamp
  (4) Engine wire from wire clamp

(b) Remove the 2 bolts.

(c) Disconnect the 2 VSV connectors, and remove the VSV assembly.

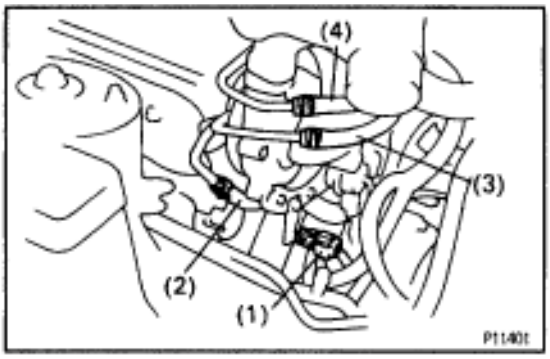

18. REMOVE AIR TUBES AND INTAKE AIR CONNECTOR

(a) Disconnect the connector and hoses:
  (1) Crankshaft position sensor connector from clamp
  (2) Water bypass hose (from water pump) from No.1 turbo water pipe
  (3) Water bypass hose (from water outlet) from No.1 turbo water pipe
  (4) Water bypass hose (from water outlet) from No.2 turbo water pipe

(b) Remove the bolt, and disconnect the No.2 turbo water pipe from the No.4 air tube.

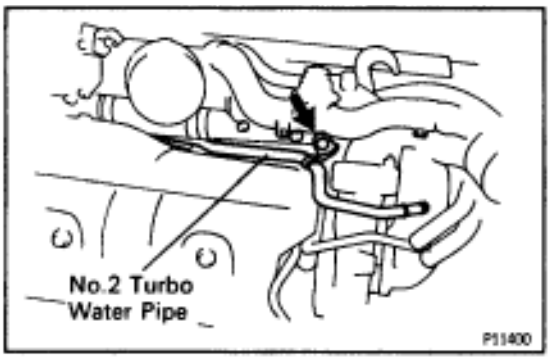

(c) Remove the 2 bolts, and disconnect the No.1 air tube from the No.1 turbocharger. Remove the gasket.
INSTALLATION HINT: Use a new gasket.
Torque: 21 N·m (210 kgf·cm, 15 ft·lbf)



(d) Remove the 2 bolts holding the No.4 air tube to the No.1 turbocharger. Remove the gasket.
INSTALLATION HINT: Use a new gasket.
Torque: 21 N·m (210 kgf·cm, 15 ft·lbf)

(e) Disconnect these hoses, and remove the No.4 air tube and air bypass valve assembly.
  (1) Air hose from No.4 air tube
  (2) Air hose from intake air connector

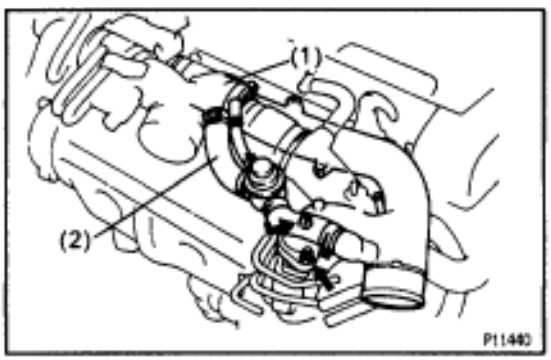

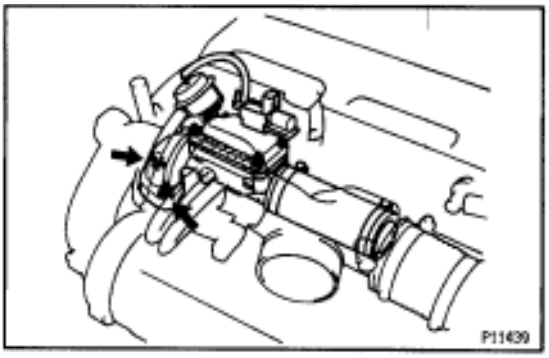

(f) Remove the 2 nuts, intake air control valve and gasket.
INSTALLATION HINT: Use a new gasket.
Torque: 21 N·m (210 kgf·cm, 15 ft·lbf)

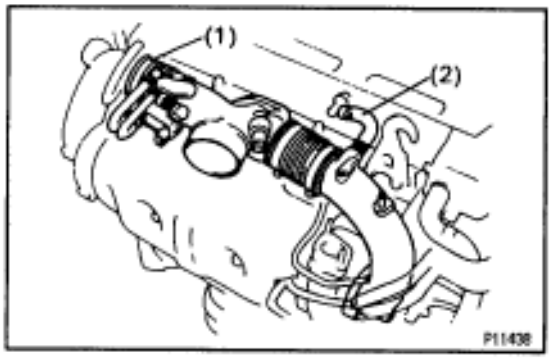

(g) Disconnect these hoses, and remove the intake air connector and No.1 air tube assembly.
(1) Air hose from No.2 air tube
(2) PCV hose from No.2 cylinder head cover

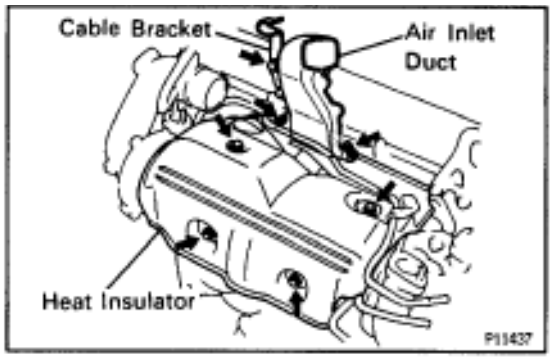

19. REMOVE AIR INLET DUCT
Remove the bolt, 2 nuts, cable bracket and air inlet duct.

20. REMOVE HEAT INSULATOR FOR TURBOCHARGER
Remove the 4 bolts and heat insulator.

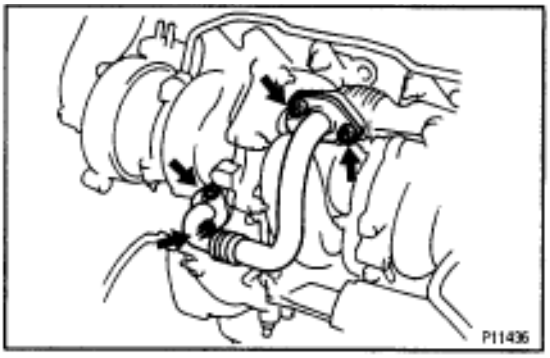

21. REMOVE EXHAUST BYPASS PIPE
Remove the 4 nuts, bypass pipe and 2 gaskets.
INSTALLATION HINT: Use 2 new gaskets and 4 new nuts.
Torque: 25 N·m (250 kgf·cm, 18 ft·lbf)



22. REMOVE EXHAUST GAS CONTROL VALVE STAY
Remove the bolt, nut and valve stay.
Torque: 43 N·m (440 kgf·cm, 32 ft·lbf)



23. REMOVE MAIN HEATED OXYGEN SENSOR

(a) Disconnect the oxygen sensor connector.

(b) Remove the 2 nuts, oxygen sensor and gasket.

INSTALLATION HINT: Use a new gasket and 2 new nuts.

Torque: 20 N·m (200 kgf·cm, 14 ft·lbf)



24. REMOVE EXHAUST GAS CONTROL VALVE

Remove the 3 nuts, control valve and 2 gaskets.

NOTICE: The control valve is ceramic. Do not drop or knock the control valve.

INSTALLATION HINT: Use 2 new gaskets and 3 new nuts.

Torque: 69 N·m (700 kgf·cm, 51 ft·lbf)

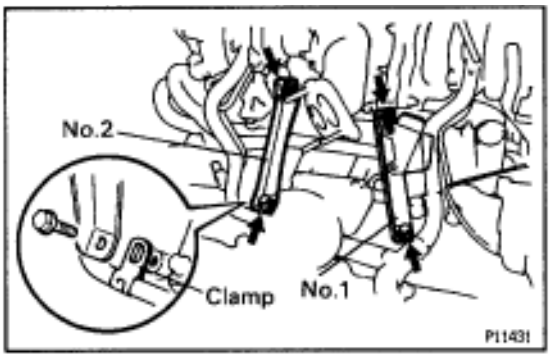

25. REMOVE NO.1 TURBOCHARGER STAY

Remove the bolt, nut and turbocharger stay.

Torque: 43 N·m (440 kgf·cm, 32 ft·lbf)

26. REMOVE NO.2 TURBOCHARGER STAY

Remove the bolt, nut and turbocharger stay.

INSTALLATION HINT: Install the turbocharger stay and No.1 turbo oil pipe clamp with the bolt and nut.

Torque: 43 N·m (440 kgf·cm, 32 ft·lbf)

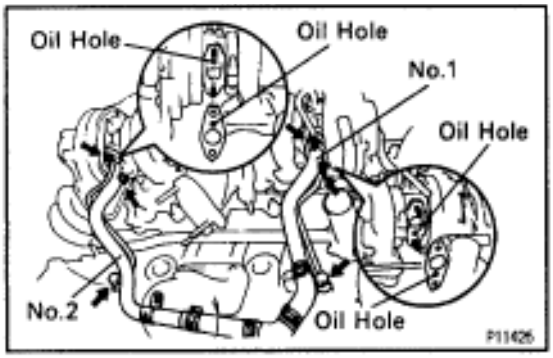

27. REMOVE NO.1 TURBO OIL PIPE

(a) Remove the union bolt holding the turbo oil pipe to the cylinder block. Remove the 2 gaskets.

INSTALLATION HINT: Use 2 new gaskets.

Torque: 39 N·m (400 kgf·cm, 29 ft·lbf)

(b) Remove the 2 nuts, and disconnect the turbo oil pipe from turbocharger. Remove the gasket.

INSTALLATION HINT:

- Use a new gasket.
- Align the oil holes of the gasket and turbocharger housing.

Torque: 21 N·m (210 kgf·cm, 15 ft·lbf)

(c) Disconnect the turbo oil hose from the turbo oil outlet on the No.1 oil pan, and remove the turbo oil pipe.

28. REMOVE NO.2 TURBO OIL PIPE

(a) Remove the union bolt holding the turbo oil pipe to the cylinder block. Remove the 2 gaskets.

INSTALLATION HINT: Use 2 new gaskets.

Torque: 39 N·m (400 kgf·cm, 29 ft·lbf)

(b) Remove the 2 nuts, and disconnect the turbo oil pipe from turbocharger. Remove the gasket.
INSTALLATION HINT:
- Use a new gasket.
- Align the oil holes of the gasket and turbocharger housing.

Torque: 21 N·m (210 kgf·cm, 15 ft·lbf)

(c) Disconnect the turbo oil hose from the turbo oil outlet on the No.1 oil pan, and remove the turbo oil pipe.

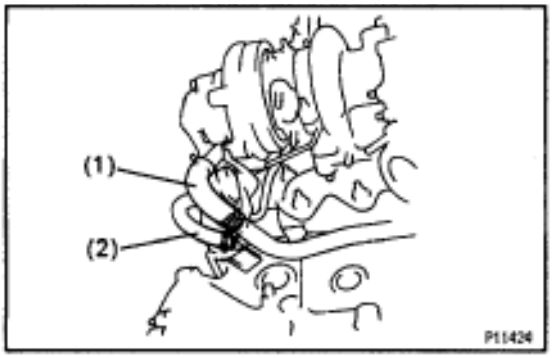

29. REMOVE TURBOCHARGERS AND TURBINE OUTLET ELBOW ASSEMBLY

(a) Disconnect these hoses:
(1) Heater hose (from No.3 water bypass pipe) from No.2 water bypass pipe
(2) Water bypass hose (from No.2 turbo water pipe) from No.2 water bypass pipe

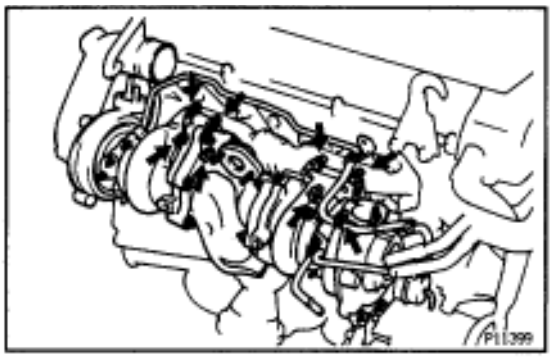

(b) Remove the 8 nuts holding the turbochargers to the exhaust manifold.
INSTALLATION HINT:
- Use 8 new nuts.
- Uniformly tighten the nuts in several passes.

Torque: 54 N·m (550 kgf·cm, 40 ft·lbf)

(c) Remove the 2 turbochargers and turbine outlet elbow assembly.

(d) Remove the 2 gaskets.
INSTALLATION HINT: Use 2 new gaskets.

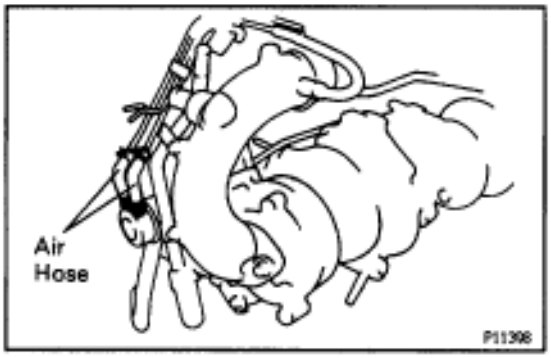

30. REMOVE NO.1 VACUUM PIPE FROM NO.2 TURBOCHARGER

Disconnect the 2 air hoses from the actuator for the exhaust bypass valve, and remove the vacuum pipe.

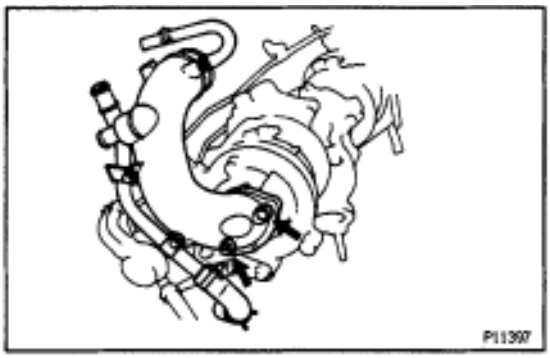

31. REMOVE NO.2 AIR TUBE AND NO.3 WATER BYPASS PIPE ASSEMBLY FROM NO.2 TURBOCHARGER

Remove the 2 bolts, the air tube, bypass pipe assembly and gasket.
INSTALLATION HINT: Use a new gasket.

Torque: 21 N·m (210 kgf·cm, 15 ft·lbf)

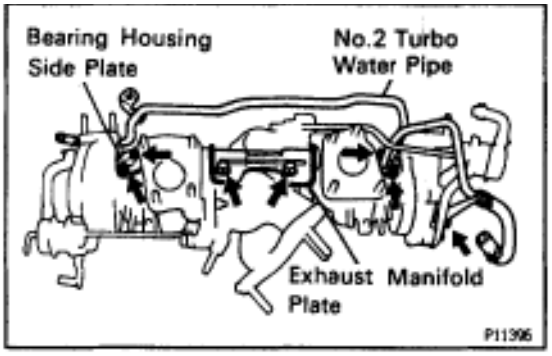

32. REMOVE EXHAUST MANIFOLD PLATE FROM TURBINE OUTLET ELBOW

Remove the 2 bolts and manifold plate.

33. REMOVE NO.2 TURBO WATER PIPE FROM NO.2 TURBOCHARGER

Remove the 2 nuts, water pipe and gasket.
INSTALLATION HINT: Use a new gasket.
Torque: 8.8 N·m (90 kgf·cm, 78 in.·lbf)

34. REMOVE BEARING HOUSING SIDE PLATE FROM NO.1 TURBOCHARGER

Remove the 2 nuts, housing plate and gasket.
INSTALLATION HINT: Use a new gasket.
Torque: 8.8 N·m (90 kgf·cm, 78 in.·lbf)

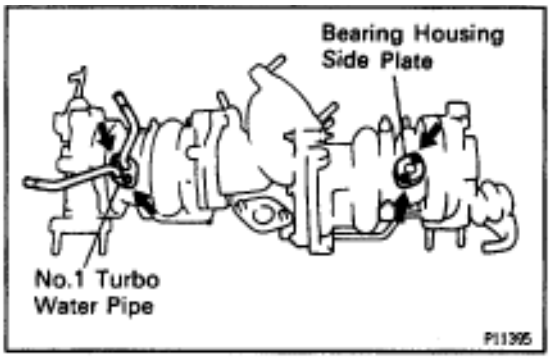

35. REMOVE NO.1 TURBO WATER PIPE FROM NO.1 TURBOCHARGER

Remove the 2 nuts, water pipe and gasket.
INSTALLATION HINT: Use a new gasket.
Torque: 8.8 N·m (90 kgf·cm, 78 in.·lbf)

36. REMOVE BEARING HOUSING SIDE PLATE FROM NO.2 TURBOCHARGER

Remove the 2 nuts, housing plate and gasket.
INSTALLATION HINT: Use a new gasket.
Torque: 8.8 N·m (90 kgf·cm, 78 in.·lbf)

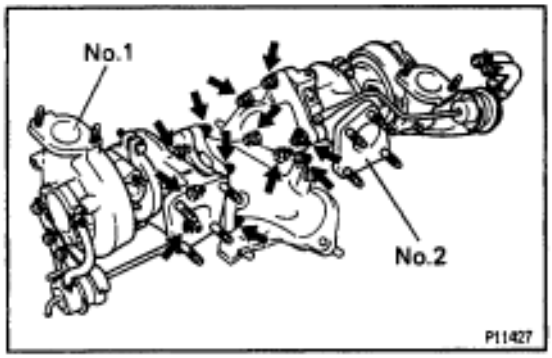

37. REMOVE NO.1 TURBOCHARGER FROM TURBINE OUTLET ELBOW

Remove the 6 nuts, turbocharger and gasket.
INSTALLATION HINT:

- Use a new gasket and 6 new nuts.
- Uniformly tighten the nuts in several passes.

Torque: 25 N·m (250 kgf·cm, 18 ft·lbf)

38. REMOVE NO.2 TURBOCHARGER FROM TURBINE OUTLET ELBOW

Remove the 6 nuts, turbocharger and gasket.
INSTALLATION HINT:

- Use a new gasket and 6 new nuts.
- Uniformly tighten the nuts in several passes.

Torque: 25 N·m (250 kgf·cm, 18 ft·lbf)

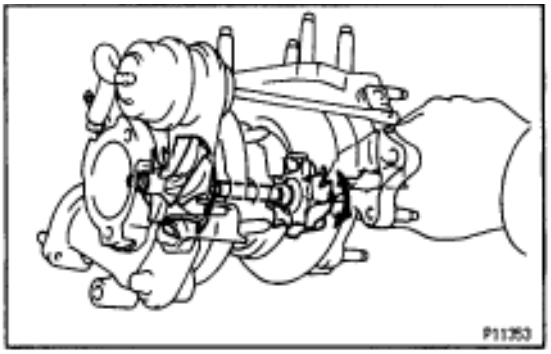

TURBOCHARGER COMPONENTS INSPECTION

Turbochargers

1. INSPECT TURBINE SHAFT ROTATION

Grasp the edge of the turbine wheel and turn it. Check that the impeller wheel turns smoothly.

If the impeller wheel does not turn or if it turns with a drag, replace the turbocharger assembly.

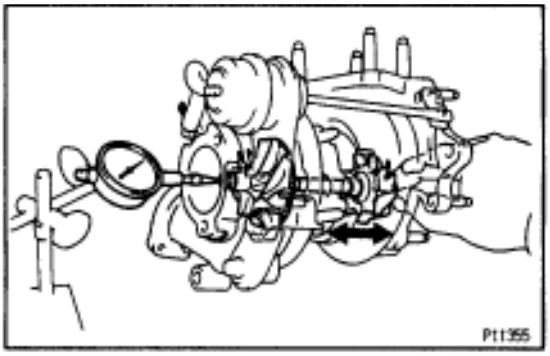

2. INSPECT AXIAL PLAY OF TURBINE SHAFT

(a) Using a dial indicator, insert the needle of the dial indicator into the air tube side.

(b) Move the turbine shaft in an axial direction, measure the axial play of the turbine shaft.

Maximum axial play:

0.110 mm (0.0045 in.)

If the axial play is greater than maximum, replace the turbocharger assembly.

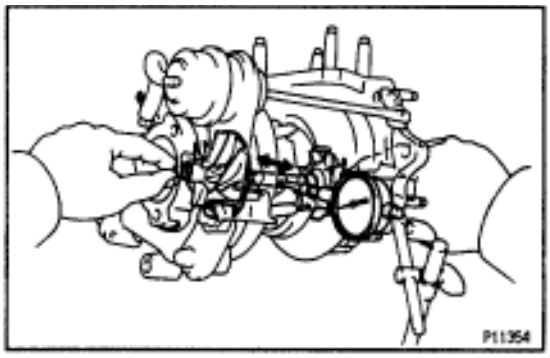

3. INSPECT RADIAL PLAY OF TURBINE SHAFT

(a) Using a dial indicator, insert the needle of the dial indicator into the oil outlet hole and set it in the center of the turbine shaft.

(b) Move the turbine shaft in a radial direction, measure the radial play of the turbine shaft.

Maximum radial play:

0.162 mm (0.0064 in.)

If the axial play is greater than maximum, replace the turbocharger assembly.

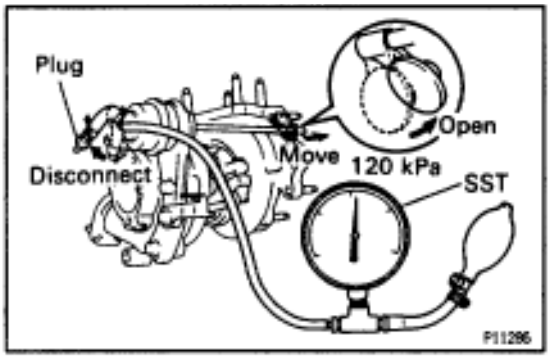

4. INSPECT WASTE GATE VALVE OPERATION

(a) Disconnect the actuator air hose from the housing, and plug the hose end.

(b) Using SST, apply approx. 120 kPa (1.22 kgf/cm^2, 17.4 psi) of pressure to the actuator.

SST 09992–00241

(c) Move the actuator push rod, and check that the waste gate valve is open.

If operation is not as specified, replace the No.1 turbocharger assembly.

NOTICE: Never apply more than 187 kPa (1.91 kgf/cm^2, 27.2 psi) of pressure to the actuator.

(d) Reconnect the actuator air hose to the housing.

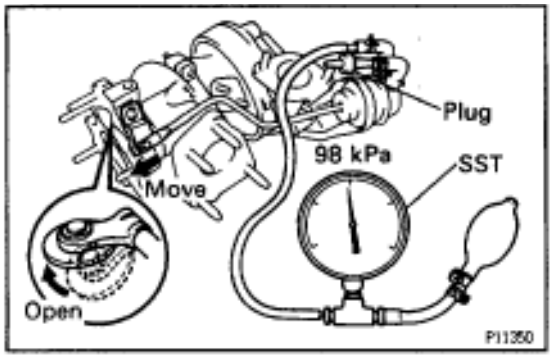

5. INSPECT EXHAUST BYPASS VALVE OPERATION

(a) Plug one side of the actuator air hose end.

(b) Using SST, apply approx. 98 kPa (1.00 kgf/cm^2, 14.2 psi) of pressure to the actuator.
SST 09992–00241

(c) Move the actuator push rod, and check that the exhaust bypass valve is open.
If operation is not as specified, replace the No.2 turbocharger assembly.
NOTICE: Never apply more than 187 kPa (1.91 kgf/cm^2, 27.2 psi) of pressure to the actuator.

(d) Remove the plug from the actuator air hose end.

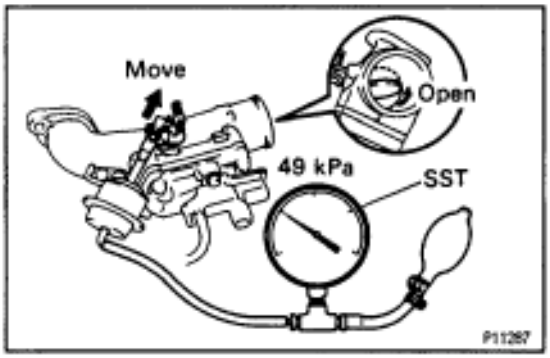

Intake Air Control Valve

INSPECT CONTROL VALVE OPERATION

(a) Using SST, apply approx. 49 kPa (0.50 kgf/cm^2, 7.1 psi) of pressure to the actuator.
SST 09992–00241

(b) Move the actuator push rod, and check that the control valve is open.
If operation is not as specified, replace the control valve assembly.

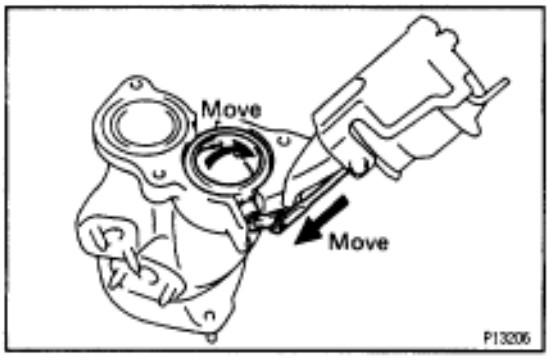

Exhaust Gas Control Valve

INSPECT CONTROL VALVE FOR DAMAGE

Move the actuator push rod and control valve, and check the control valve for damage.
If the valve is damaged, replace the control valve assembly.

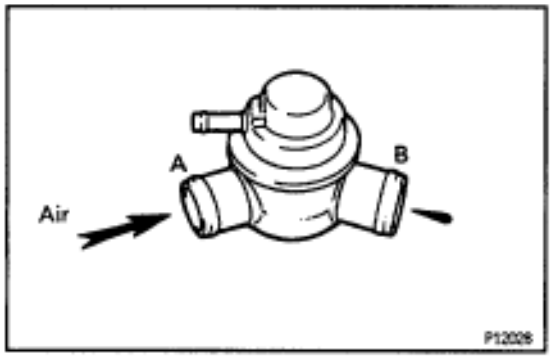

Air Bypass Valve

INSPECT AIR BYPASS VALVE OPERATION

(a) Check that air does not flow from port A to B.

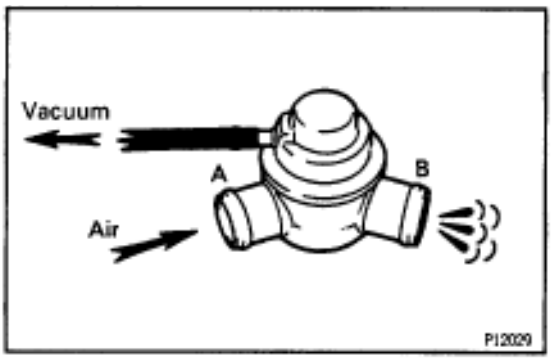

(b) Apply vacuum to the actuator.

(c) Check that air flows from port A to B.
If operation is not as specified, replace the valve.

CHARGE AIR COOLER (CAC) COMPONENTS FOR REMOVAL AND INSTALLATION

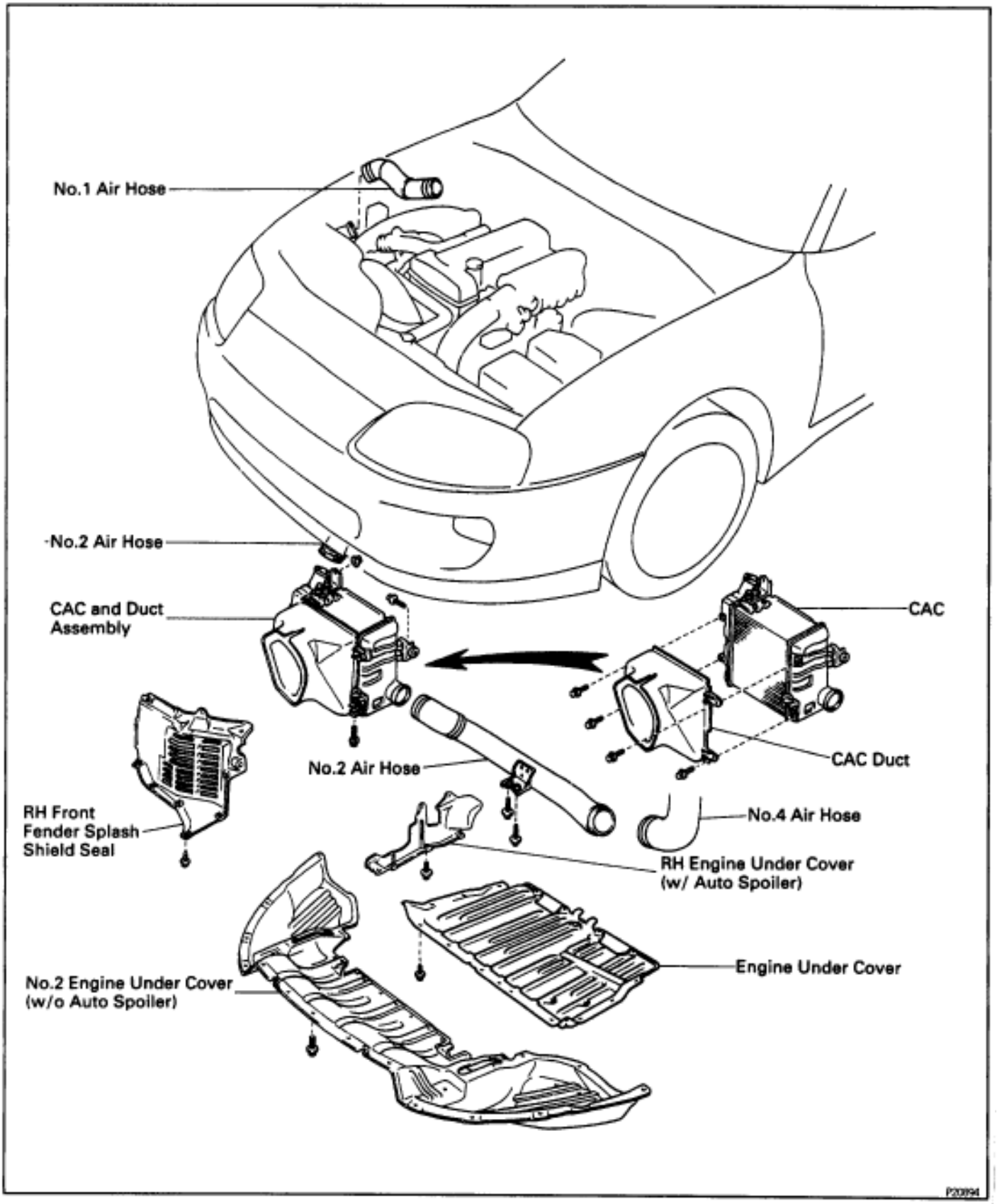

CAC REMOVAL

Installation is in the reverse order of removal.

1. **REMOVE NO.1 AIR HOSE**
2. **REMOVE ENGINE UNDER COVER**
3. **w/o Auto Spoiler:**
   REMOVE NO.2 ENGINE UNDER COVER
4. **REMOVE RH FRONT FENDER SPLASH SHIELD SEAL**
5. **w/ Auto Spoiler:**
   REMOVE RH ENGINE UNDER COVER
6. **DISCONNECT AIR HOSE FROM CAC**

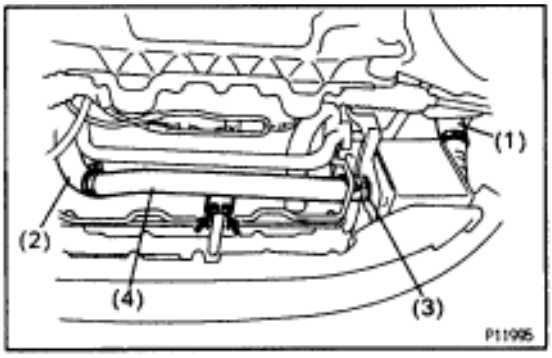

(a) Remove the 2 bolts holding the No.2 air tube (3) to the body.
(b) Disconnect these hoses:
   (1) No.2 air hose from CAC
   (2) No.4 air hose from No.2 air tube
   (3) No.3 air hose from CAC
(c) Remove the No.2 air tube (4).

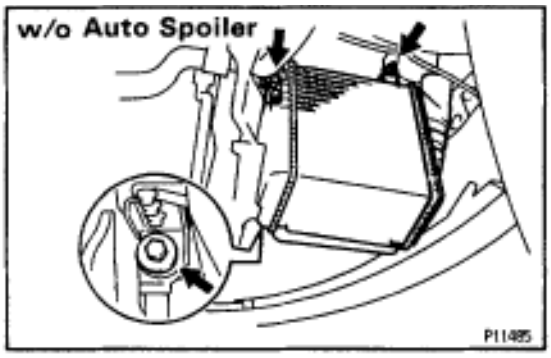

7. **REMOVE CAC AND CAC DUCT ASSEMBLY**

w/o Auto Spoiler:

Remove the nut, 2 bolts and CAC.
Torque: 13 N·m (135 kgf·cm, 10 ft·lbf)

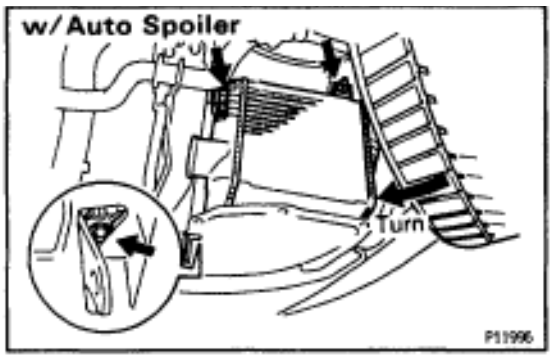

w/ Auto Spoiler:

(a) Fully turn the tire in the illustration direction.
(b) Remove the nut, 2 bolts and CAC.
Torque: 13 N·m (135 kgf·cm, 10 ft·lbf)

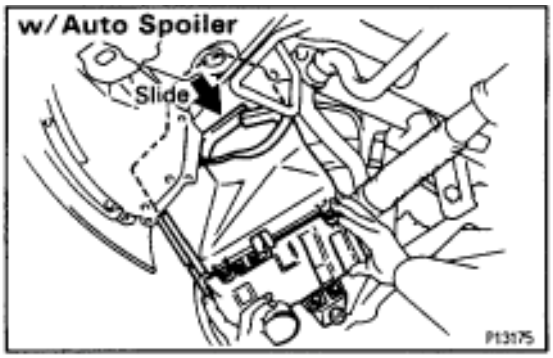

HINT: Remove the CAC between the suspension and body at the illustrated angle of the CAC.

8. **REMOVE CAC DUCT FROM CAC**

Remove the 4 bolts and CAC duct.
Torque: 4.9 N·m (50 kgf·cm, 43 in.·lbf)

SERVICE SPECIFICATIONS
SERVICE DATA

Turbocharger	Turbocharging pressure		61–75 kPa (0.62–0.76 kgf/cm^2, 8.8–10.8 psi)
	Impeller wheel axial play	Limit	0.162 mm (0.0064 in.)
	Impeller wheel radial play	Limit	0.110 mm (0.0045 in.)

TORQUE SPECIFICATIONS

Part tightened		N·m	kgf·cm	ft·lbf
Turbocharger x Turbine outlet elbow		25	250	18
Turbo water pipe x Turbocharger		8.8	90	78 in.·lbf
Side bearing housing plate x Turbocharger		8.8	90	78 in.·lbf
No.2 air tube x No.2 turbocharger		21	210	15
Turbocharger x Exhaust manifold		54	550	40
Turbo oil pipe x Turbocharger		21	210	15
Turbo oil pipe x Cylinder block		39	400	29
Turbocharger stay x Turbocharger		43	440	32
Turbocharger stay x Cylinder block		43	440	32
Exhaust gas control valve x Turbine outlet elbow		69	700	51
Main heated oxygen sensor x Exhaust gas control valve		20	200	14
Exhaust gas control valve stay x Exhaust gas control valve		43	440	32
Exhaust gas control valve stay x Cylinder block		43	440	32
Exhaust bypass pipe x Turbine outlet elbow		25	250	18
Exhaust bypass pipe x Exhaust gas control valve		25	250	18
Intake air control valve x No.2 turbocharger		21	210	15
No.4 air tube x No.1 turbocharger		21	210	15
No.1 air tube x No.1 turbocharger		21	210	15
No.2 front exhaust pipe x Exhaust gas control valve		62	630	46
Front exhaust pipe x No.2 front exhaust pipe		58	590	43
Pipe support bracket x Transmission		43	440	32
Upper front crossmember extension x Front suspension	Bolt	29	300	22
	Nut	33	340	25
Front lower arm bracket stay x Front suspension	Bolt	44	450	33
	Nut	59	600	43
CAC duct x CAC		4.9	50	43 in.·lbf
CAC x Body		13	135	10

IGNITION SYSTEM

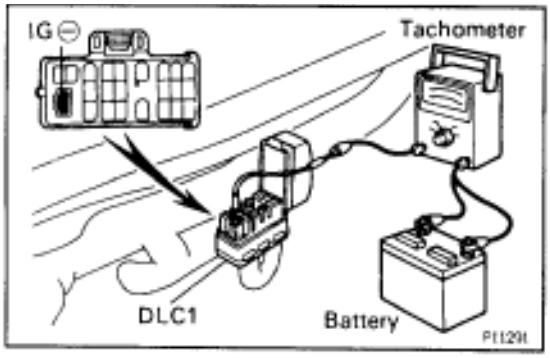

(2JZ–GE)

PRECAUTION

1. **With a tachometer connected to the system, connect the tester probe of the tachometer to terminal IG⊖ of the DLC1.**
2. **As some tachometers are not compatible with this ignition system, we recommend that you confirm the compatibility of your unit before use.**
3. **Never allow the tachometer terminals to touch ground as it could result in damage to the igniter and/or ignition coil.**
4. **Do not disconnect the battery while the engine is running.**
5. **Check that the igniter is properly grounded to the body.**

PREPARATION
SST (SPECIAL SERVICE TOOLS)

	09240–00020 Wire Gauge Set	Distributor

RECOMMENDED TOOLS

	09082–00050 TOYOTA Electrical Tester Set ◆	
	09200–00010 Engine Adjust Kit ◆	

EQUIPMENT

Megger insulation resistance meter	Spark plug
Spark plug cleaner	
Thermometer	

COOLANT

Item		Capacity	Classification
Engine coolant (W/Heater)	M/T	7.3 liters (7.7 US qts, 6.4 lmp. qts)	Ethylene–glycol base
	A/T	8.3 liters (8.8 US qts, 7.3 lmp. qts)	

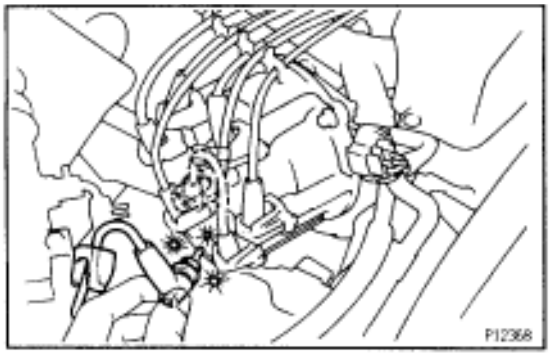

ON–VEHICLE INSPECTION
SPARK TEST

CHECK THAT SPARK OCCURS

(a) Disconnect the high–tension cord (from the ignition coil) from the distributor cap.

(b) Hold the end approx. 12.5 mm (0.50 in.) from the body ground.

(c) See if spark occurs while engine is being cranked.
HINT: To prevent gasoline from being injected from injectors during this test, crank the engine for no more than 1–2 seconds at time.
If the spark does not occur, do the test as follows:

SPARK TEST

↓ NO

CHECK CONNECTION OF IGNITION COIL, IGNITER AND DISTRIBUTOR CONNECTOR → BAD → Connect securely.

↓ OK

CHECK RESISTANCE OF HIGH–TENSION CORD (See page IG–5)
Maximum resistance: 25 kΩ per cord → BAD → Replace the cord(s).

↓ OK

CHECK POWER SUPPLY TO IGNITION COIL AND IGNITER
1. Turn ignition switch to ON.
2. Check that there is battery voltage at ignition coil positive (+) terminal.

→ BAD → Check wiring between ignition switch to ignition coil and igniter.

↓ OK

CHECK RESISTANCE OF IGNITION COIL (See page IG–7)

Resistance:	Cold	Hot
Primary	0.21 – 0.33 Ω	0.27 – 0.39 Ω
Secondary	6.4 – 11.1 kΩ	8.2 – 13.0 kΩ

→ BAD → Replace the ignition coil.

↓ OK

CHECK RESISTANCE OF SIGNAL GENERATOR (PICKUP COIL)(See page IG–8)

Resistance:	Cold	Hot
G1 and G ⊖	125 – 200 Ω	160 – 235 Ω
G2 and G ⊖	125 – 200 Ω	160 – 235 Ω
NE and G ⊖	155 – 250 Ω	190 – 290 Ω

→ BAD → Replace the distributor housing assembly.

↓ OK

CHECK AIR GAP OF DISTRIBUTOR (See page IG–8)
Air gap: 0.2 – 0.5 mm (0.008 – 0.020 in.) → BAD → Replace the distributor housing assembly.

↓ OK

CHECK IGT SIGNAL FROM ECM (See page EG–413) → BAD → Check wiring between ECM, distributor and igniter, and then try another ECM.

↓ OK

TRY ANOTHER IGNITER

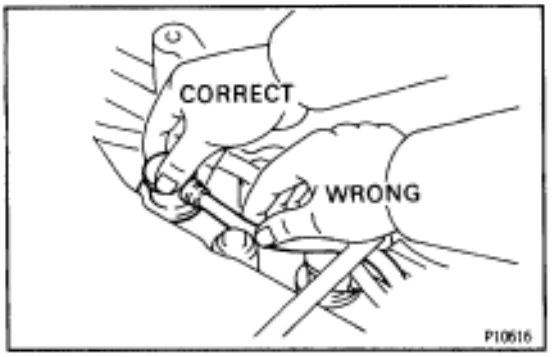

HIGH–TENSION CORDS INSPECTION

1. **REMOVE THROTTLE BODY**
   (See throttle body removal in SFI System)
2. **REMOVE NO.3 TIMING BELT COVER**
3. **REMOVE CYLINDER HEAD REAR COVER**
4. **DISCONNECT HIGH–TENSION CORDS FROM SPARK PLUGS AND IGNITION COIL**
   Disconnect the high–tension cords at the rubber boot. Do not pull on the high–tension cords.

   NOTICE: Pulling on or bending the cords may damage the conductor inside.

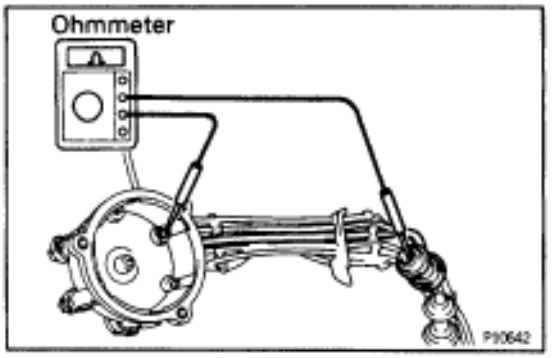

5. **REMOVE DISTRIBUTOR CAP WITHOUT DISCONNECTING HIGH–TENSION CORDS**
6. **INSPECT HIGH–TENSION CORD RESISTANCE**
   Using an ohmmeter, measure the resistance without disconnecting the distributor cap.
   Maximum resistance:
   25 kΩ per cord
   If the resistance is greater than maximum, check the terminals. If necessary, replace the high–tension cord and/or distributor cap.
7. **REINSTALL DISTRIBUTOR CAP**
8. **RECONNECT HIGH–TENSION CORDS TO SPARK PLUGS AND IGNITION COIL**
9. **REINSTALL CYLINDER HEAD REAR COVER**
10. **REINSTALL NO.3 TIMING BELT COVER**
11. **REINSTALL THROTTLE BODY**
    (See throttle body installation in SFI System)

SPARK PLUGS INSPECTION

NOTICE:

- **Never use a wire brush for cleaning.**
- **Never attempt to adjust the electrode gap on used a spark plug.**
- **Spark plugs should be replaced every 100,000 km (60,000 miles).**

1. **DISCONNECT HIGH–TENSION CORDS FROM SPARK PLUGS**

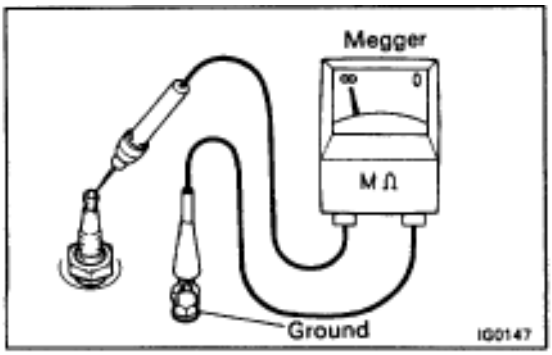

2. **INSPECT ELECTRODE**
   Using a megger (insulation resistance meter), measure the insulation resistance.
   Standard correct insulation resistance:
   10 MΩ or more
   If the resistance is less than specified, proceed to step 7.
   HINT: If a megger is not available, the following simple method of inspection provides fairly accurate results.

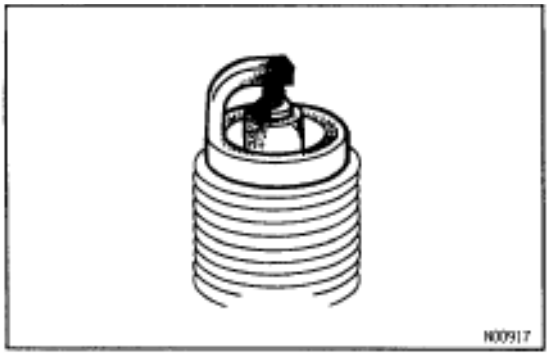

Simple Method:

(a) Quickly race the engine 5 times to 4,000 rpm.
(b) Remove the spark plug.
(c) Visually check the spark plug.
If the electrode is dry...OK
If the electrode is wet...Proceed to step 4
(d) Reinstall the spark plug.

3. REMOVE SPARK PLUGS

Using a 16 mm plug wrench, remove the 6 spark plugs.

4. VISUALLY INSPECT SPARK PLUGS

Check the spark plug for thread damage and insulator damage.

If abnormal, replace the spark plug.

Recommended spark plug:

ND
PK16R11
NGK
BKR5EP11

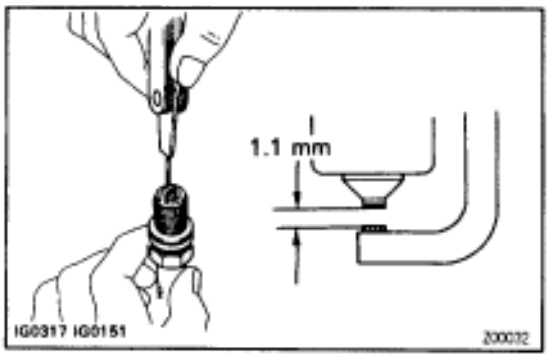

5. INSPECT ELECTRODE GAP

Maximum electrode gap for used spark plug:

1.3 mm (0.051 in.)

If the gap is greater than maximum, replace the spark plug.

Correct electrode gap for new spark plug:

1.1 mm (0.043 in.)

NOTICE: If adjusting the gap of a new spark plug, bend only the base of the ground electrode. Do not touch the tip. Never attempt to adjust the gap on the used plug.

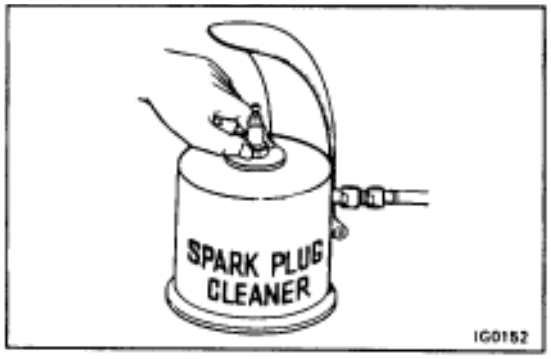

6. CLEAN SPARK PLUGS

If the electrode has traces of wet carbon, allow it to dry and then clean with a spark plug cleaner.

Air pressure:

Below 588 kPa (6 kgf·cm^2, 85 psi)

Duration:

20 seconds or less

HINT: If there are traces of oil, remove it with gasoline before using the spark plug cleaner.

7. REINSTALL SPARK PLUGS

Torque: 18 N·m (180 kgf·cm, 13 ft·lbf)

8. RECONNECT HIGH–TENSION CORDS TO SPARK PLUGS

IGNITION COIL INSPECTION

NOTICE: ”Cold” and ”Hot” in the following sentences express the temperature of the coils themselves. ”Cold” is from–10°C (14°F) to 50°C (122°F) and ”Hot” is from 50°C (122°F) to 100°C (212°F).

1. **DISCONNECT IGNITION COIL CONNECTOR**
2. **DISCONNECT HIGH–TENSION CORD FROM IGNITION COIL**
3. **INSPECT PRIMARY COIL RESISTANCE**

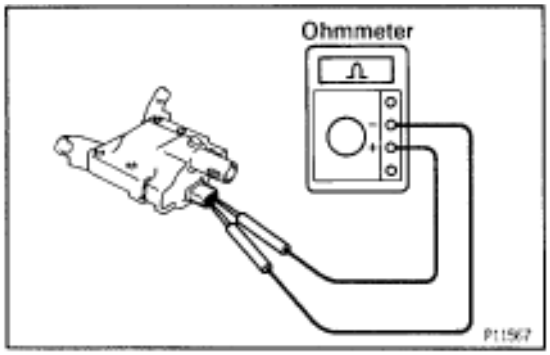

Using an ohmmeter, measure the resistance between the positive (+) and negative (–) terminals.

Primary coil resistance:

Cold:

0.36–0.55 Ω

Hot:

0.45–0.65 Ω

If the resistance is not as specified, replace the ignition coil.

4. **INSPECT SECONDARY COIL RESISTANCE**

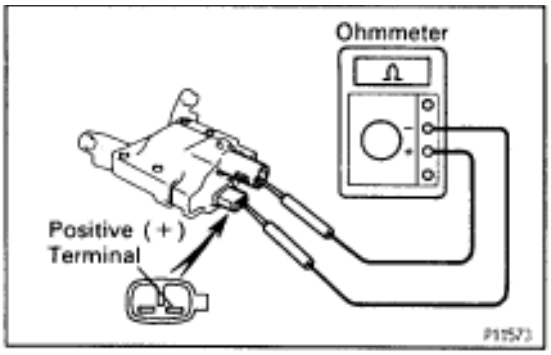

Using an ohmmeter, measure the resistance between the positive (+) and high–tension terminals.

Secondary coil resistance:

Cold:

9.0–15.4 kΩ

Hot:

11.4–18.1 kΩ

If the resistance is not as specified, replace the ignition coil.

5. **RECONNECT HIGH–TENSION CORD TO IGNITION COIL**
6. **RECONNECT IGNITION COIL CONNECTOR**

DISTRIBUTOR INSPECTION

NOTICE: ”Cold” and ”Hot” in the following sentences express the temperature of the coils themselves. ”Cold” is from–10°C (14°F) to 50°C (122°F) and ”Hot” is from 50° C (122°F) to 100°C (212°F).

1. **REMOVE DISTRIBUTOR CAP WITHOUT DISCONNECTING HIGH–TENSION CORDS**
2. **REMOVE ROTOR**

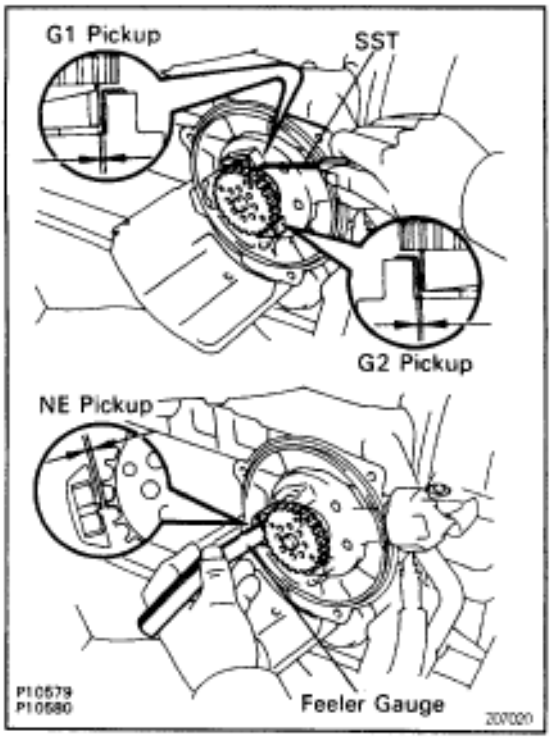

3. INSPECT AIR GAP

Using SST (G1 and G2 pickups) and a feeler gauge (NE pick-up), measure the air gap between the signal rotor and pickup coil projection.

SST 09240–00020 for G1 and G2 pickups

Air gap:

0.2–0.5 mm (0.008–0.020 in.)

If the air gap is not as specified, replace the distributor housing assembly.

4. DISCONNECT DISTRIBUTOR CONNECTOR

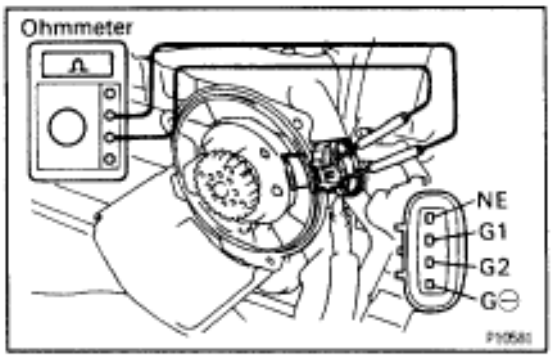

5. INSPECT SIGNAL GENERATOR (PICKUP COIL) RESISTANCE

Using an ohmmeter, measure the resistance between terminals.

Pickup coil resistance:

Cold

G1 and G⊖

125 – 200 Ω

G2 and G⊖

125 – 200 Ω

NE and G⊖

155 – 250 Ω

Hot

G1 and G⊖

160 – 235 Ω

G2 and G⊖

160 – 235 Ω

NE and G⊖

190 – 290 Ω

If the resistance is not as specified, replace the distributor housing assembly.

6. RECONNECT DISTRIBUTOR CONNECTOR

7. REINSTALL ROTOR

8. REINSTALL DISTRIBUTOR CAP

IGNITER INSPECTION

(See procedure Spark Test on page IG–4)

HIGH–TENSION CORD AND CORD CLAMP

COMPONENTS FOR REMOVAL AND INSTALLATION

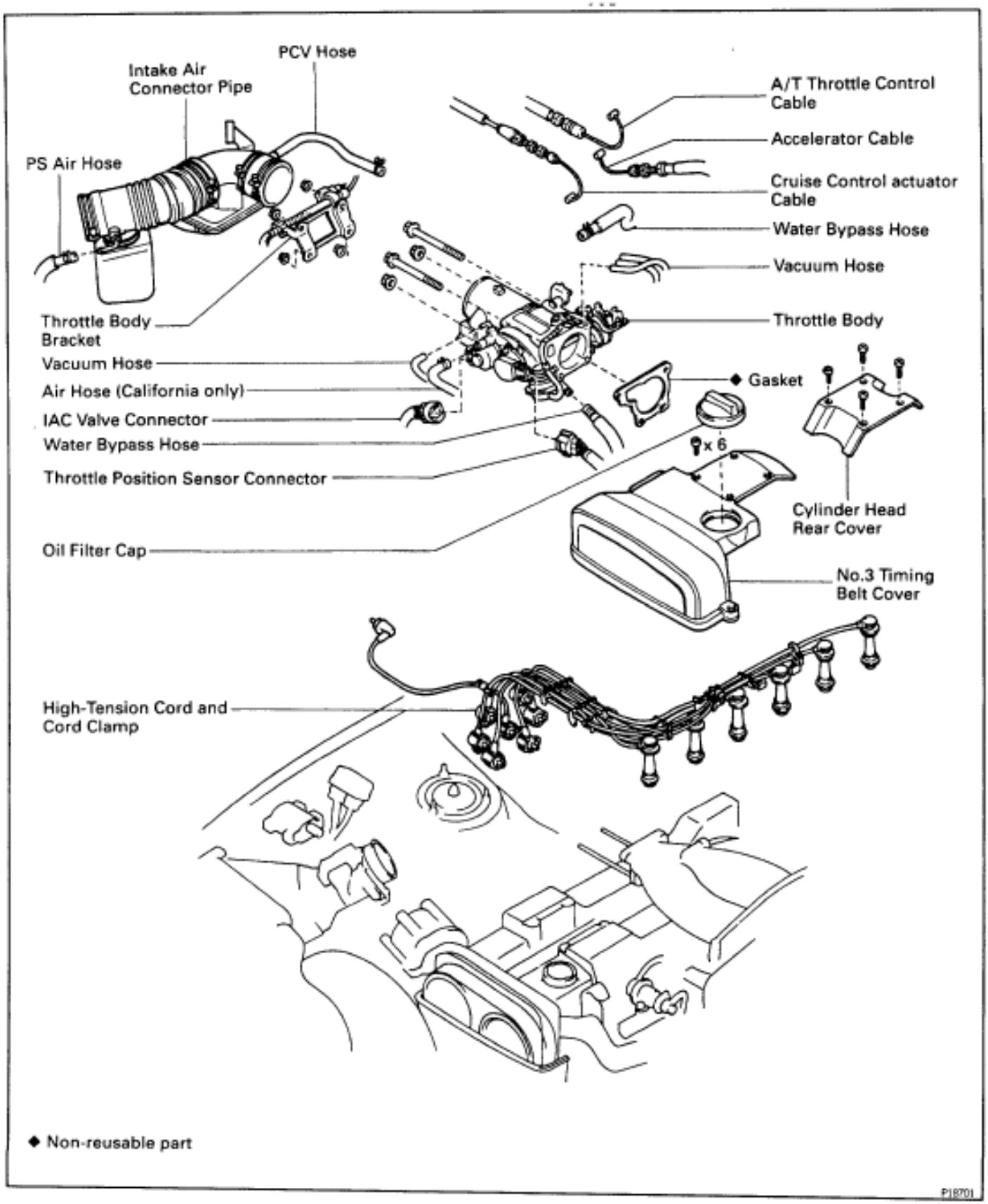

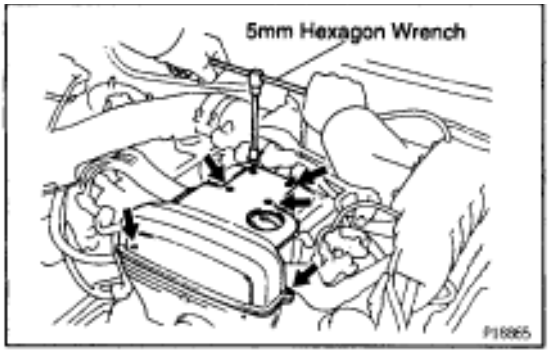

HIGH–TENSION CORDS AND CORD CLAMPS REMOVAL

1. REMOVE THROTTLE BODY
(See throttle body removal in SFI System)

2. REMOVE NO.3 TIMING BELT COVER

(a) Remove the oil filler cap.

(b) Using a 5 mm hexagon wrench, remove the 6 bolts and timing belt cover.

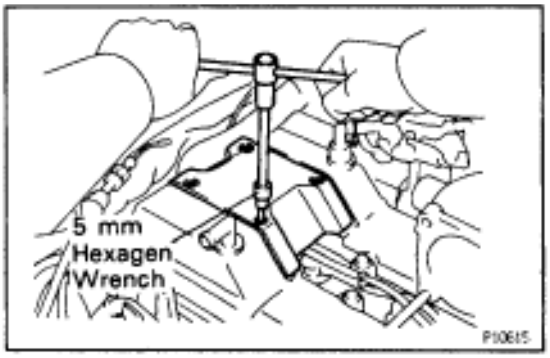

3. REMOVE CYLINDER HEAD REAR COVER

Using a 5 mm hexagon wrench, remove the 4 bolts and rear cover.

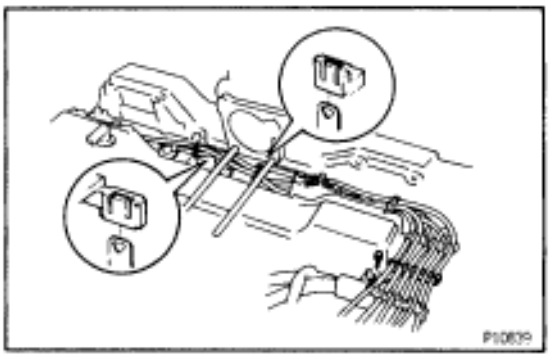

4. REMOVE HIGH–TENSION CORDS AND CORD CLAMPS ASSEMBLY

(a) Disconnect the 2 high–tension cord clamps from the claws of the No.3 cylinder head cover.

(b) Remove the bolt holding the high–tension cord clamp to No.2 cylinder head cover.

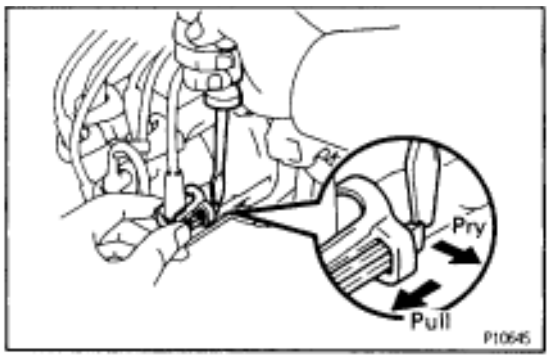

(c) Disconnect the high–tension cords from the distributor and ignition coil.

- Using a screwdriver, lift up the lock claw and disconnect the holder from the distributor (ignition coil).

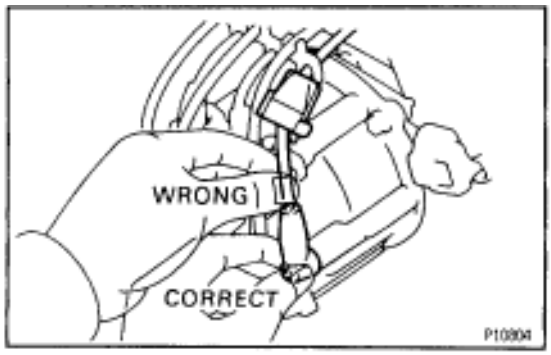

- Disconnect the high–tension cord at the grommet. Do not pull on the cord.

NOTICE: Pulling on or bending the cords may damage the conductor inside.

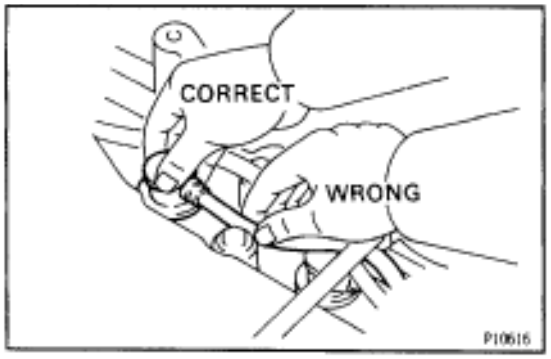

(d) Disconnect the high–tension cords from the spark plugs. Disconnect the high–tension cords at the rubber boot. Do not pull on the cords.
NOTICE: Pulling on or bending the cords may damage the conductor inside.

(e) Remove the 7 high–tension cords and 8 cord clamps assembly.

5. REMOVE CORD CLAMPS FROM HIGH–TENSION CORDS

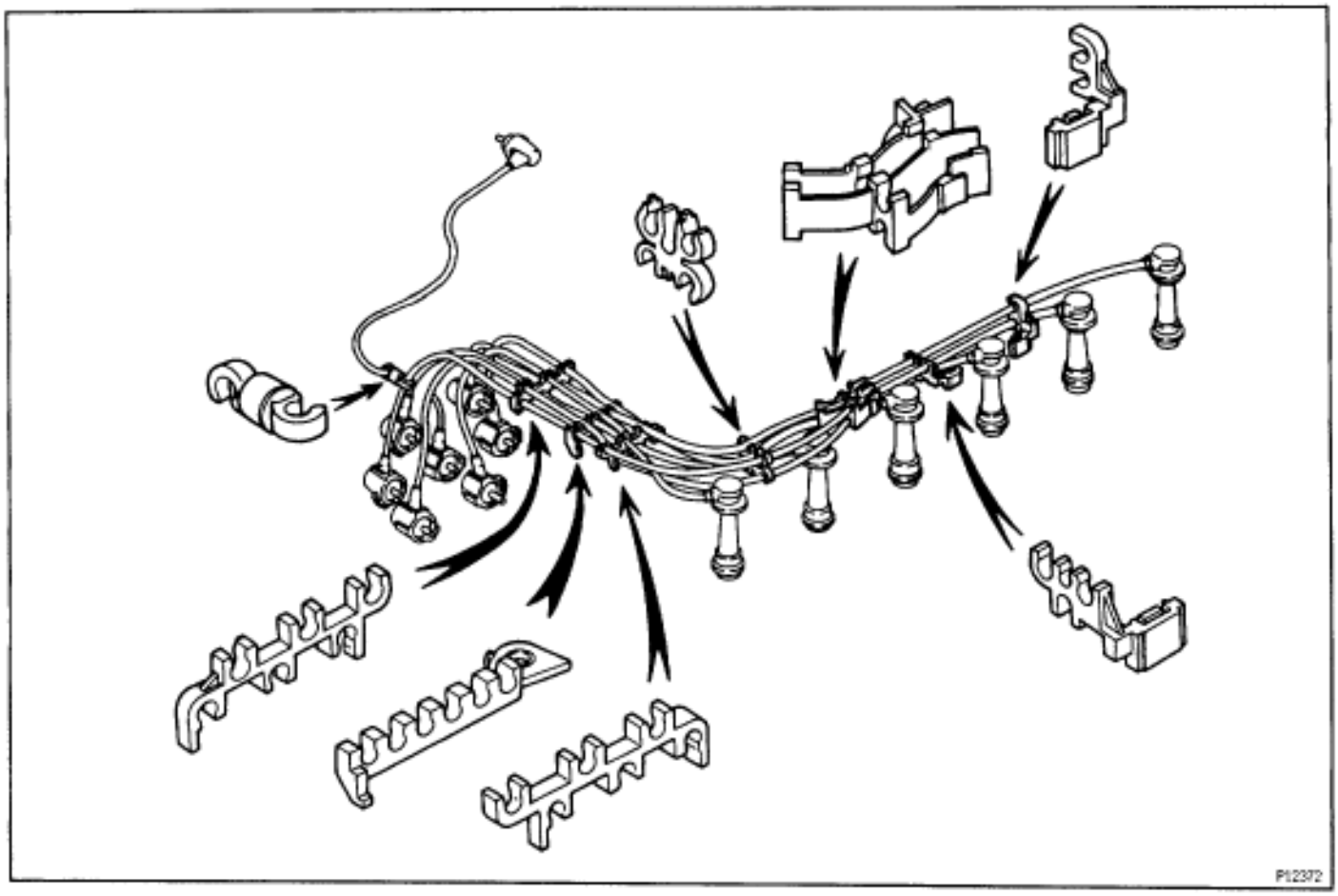

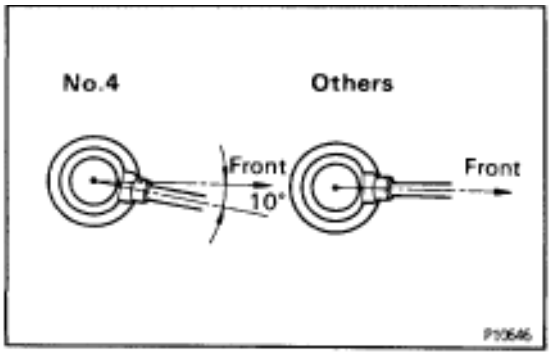

HIGH–TENSION CORDS AND CORD CLAMPS INSTALLATION

1. INSTALL HIGH–TENSION CORDS

(a) Connect the high–tension cords to the spark plugs.
- Face the cord of the high–tension cord as shown in the illustration.

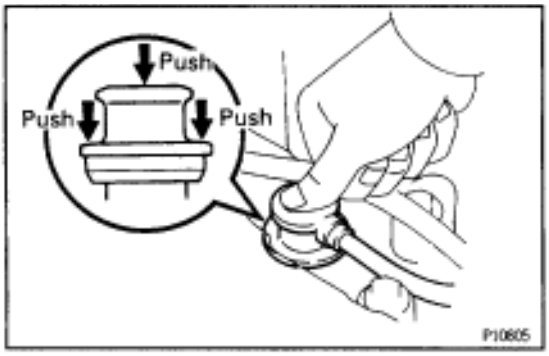

- Fit the high–tension cord by pushing the center and its outer ring.

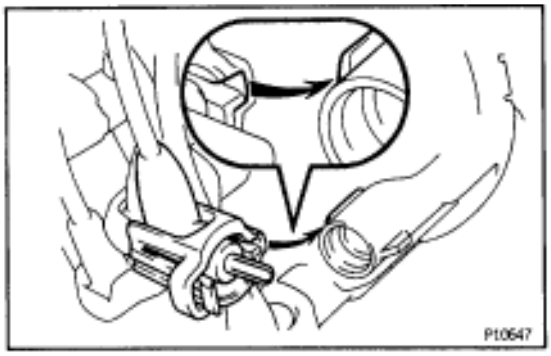

(b) Connect the high–tension cords to the distributor and ignition coil.

- Align the spline of the distributor (ignition coil) with the spline groove of the holder.

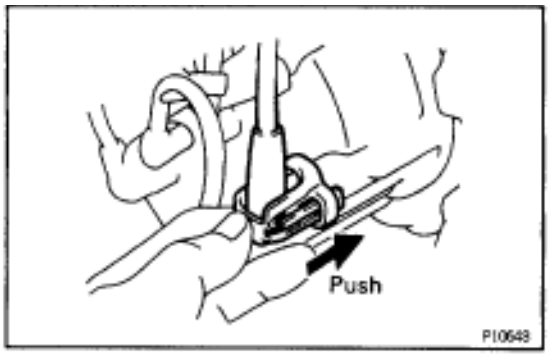

- Push in the holder together with the grommet until the claw of the holder locks securely.

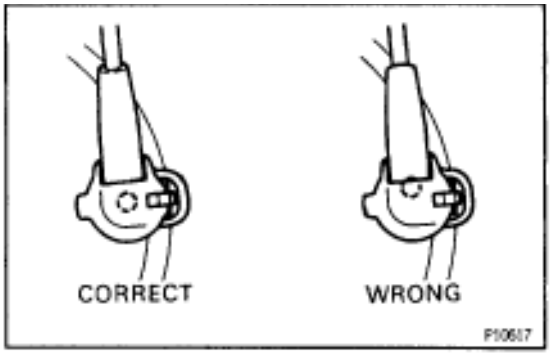

NOTICE: Check that holder is correctly installed to the grommet and distributor (ignition coil) as shown in the illustration.

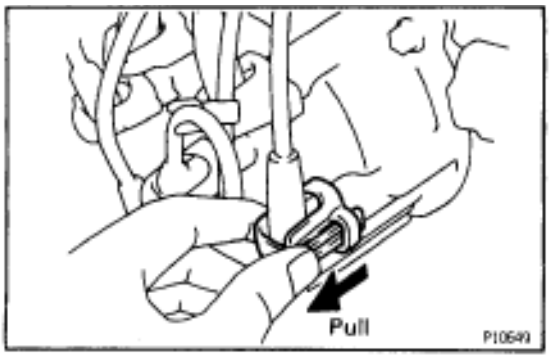

- Check that the lock claw of the holder is engaged by lightly pulling the holder.

(c) Secure the high–tension cords with the 8 cord clamps as shown in the illustration.

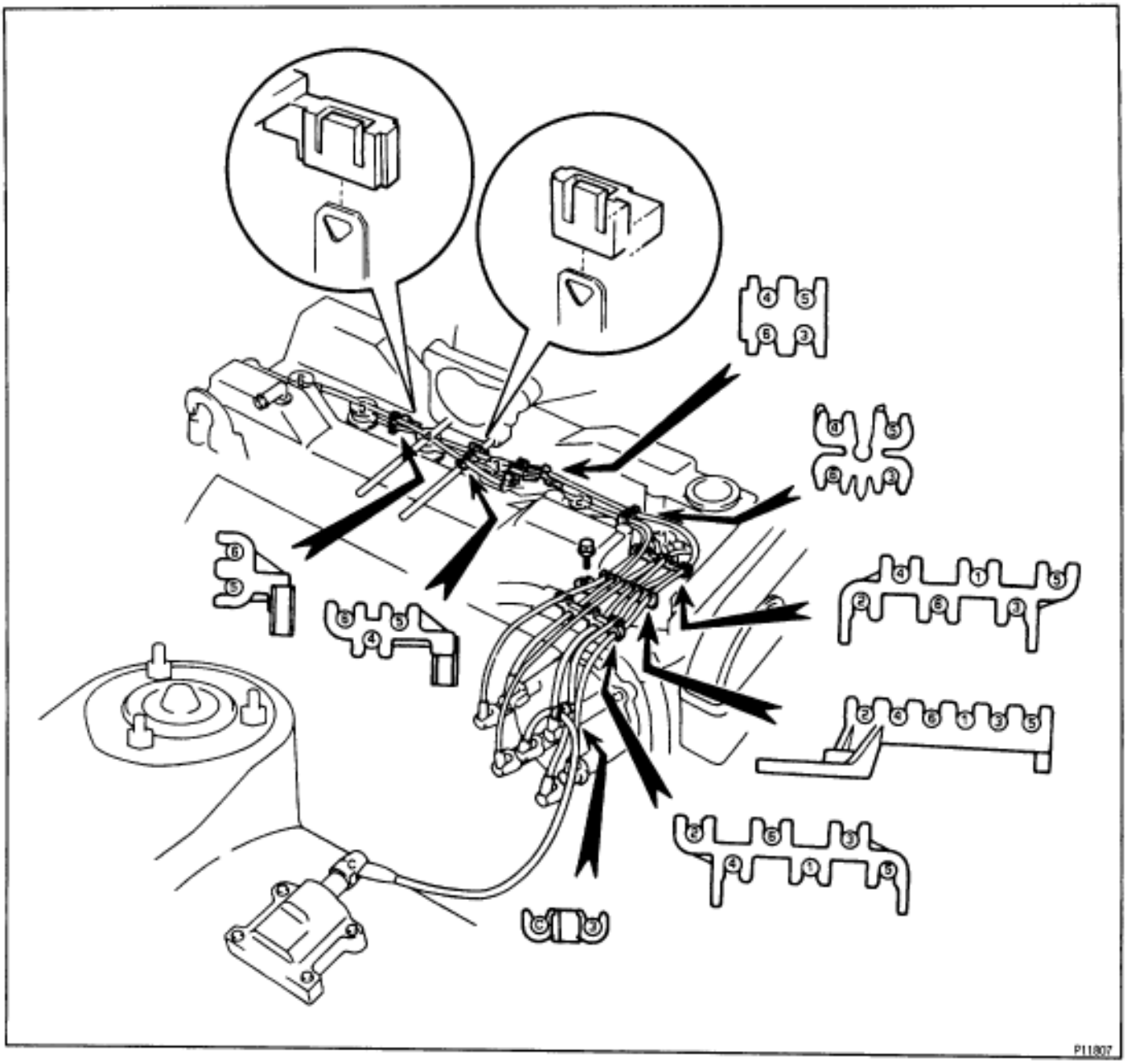

2. **INSTALL CYLINDER HEAD REAR COVER**
3. **INSTALL NO.3 TIMING BELT COVER**
4. **INSTALL THROTTLE BODY ASSEMBLY**
   (See throttle body installation in SFI System)
5. **FILL WITH ENGINE COOLANT**

DISTRIBUTOR

COMPONENTS FOR REMOVAL AND INSTALLATION

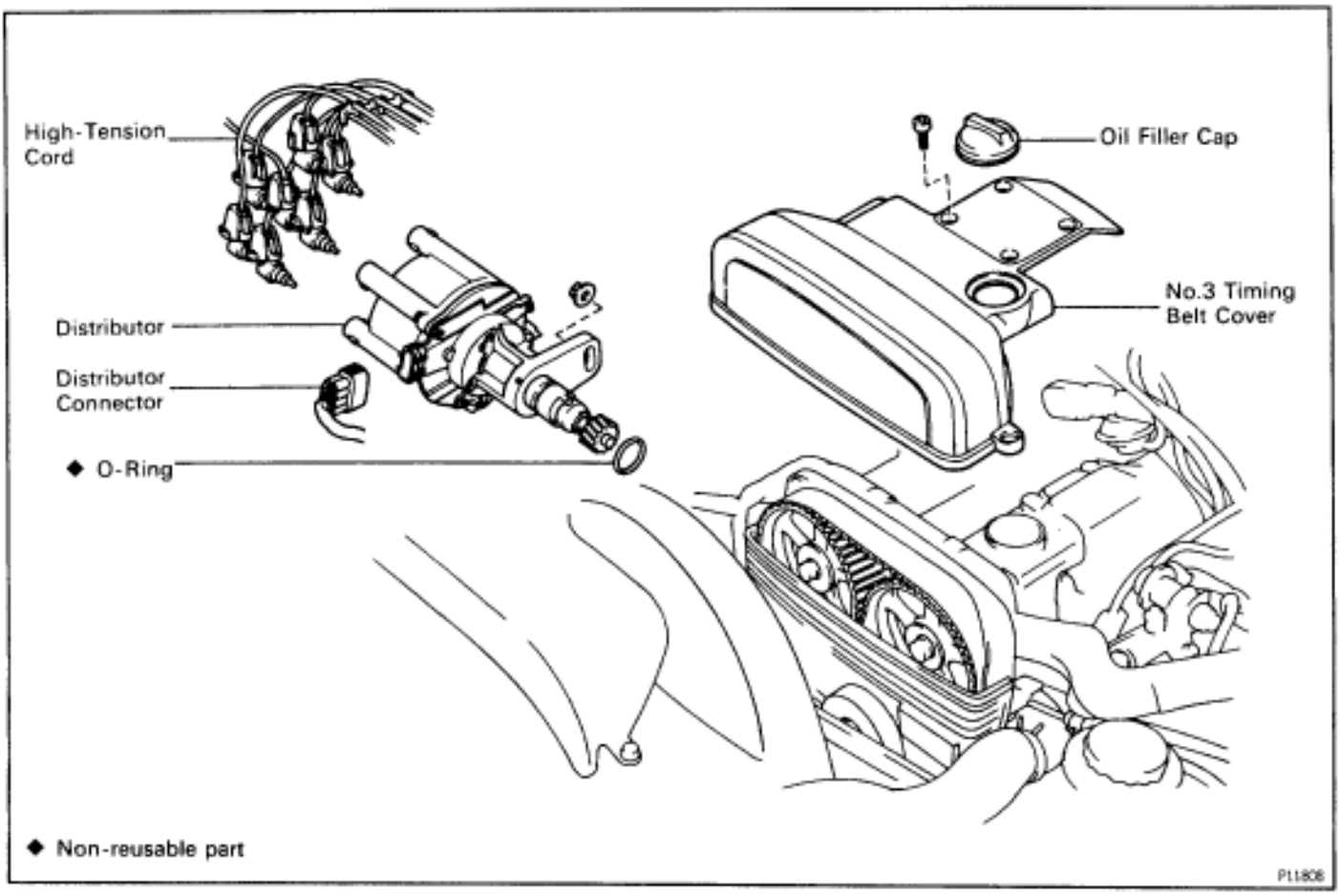

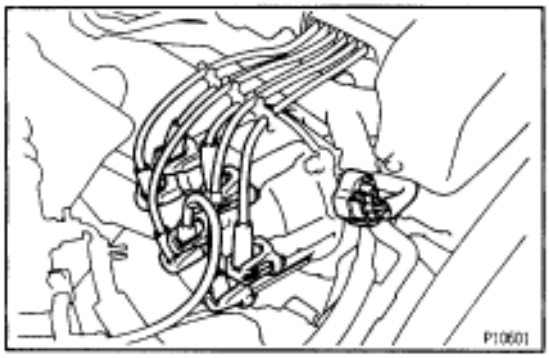

DISTRIBUTOR REMOVAL

1. DISCONNECT DISTRIBUTOR CONNECTOR

2. DISCONNECT HIGH–TENSION CORDS FROM DISTRIBUTOR

Disconnect the 7 high–tension cords from the distributor.

NOTICE: Pulling on or bending the cords may damage the conductor inside.

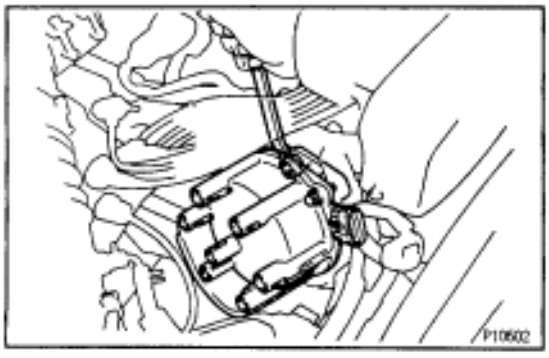

3. REMOVE DISTRIBUTOR

(a) Remove the nut.

(b) Pull out the distributor.

(c) Remove the O–ring from the distributor housing.

COMPONENTS FOR DISASSEMBLY AND ASSEMBLY

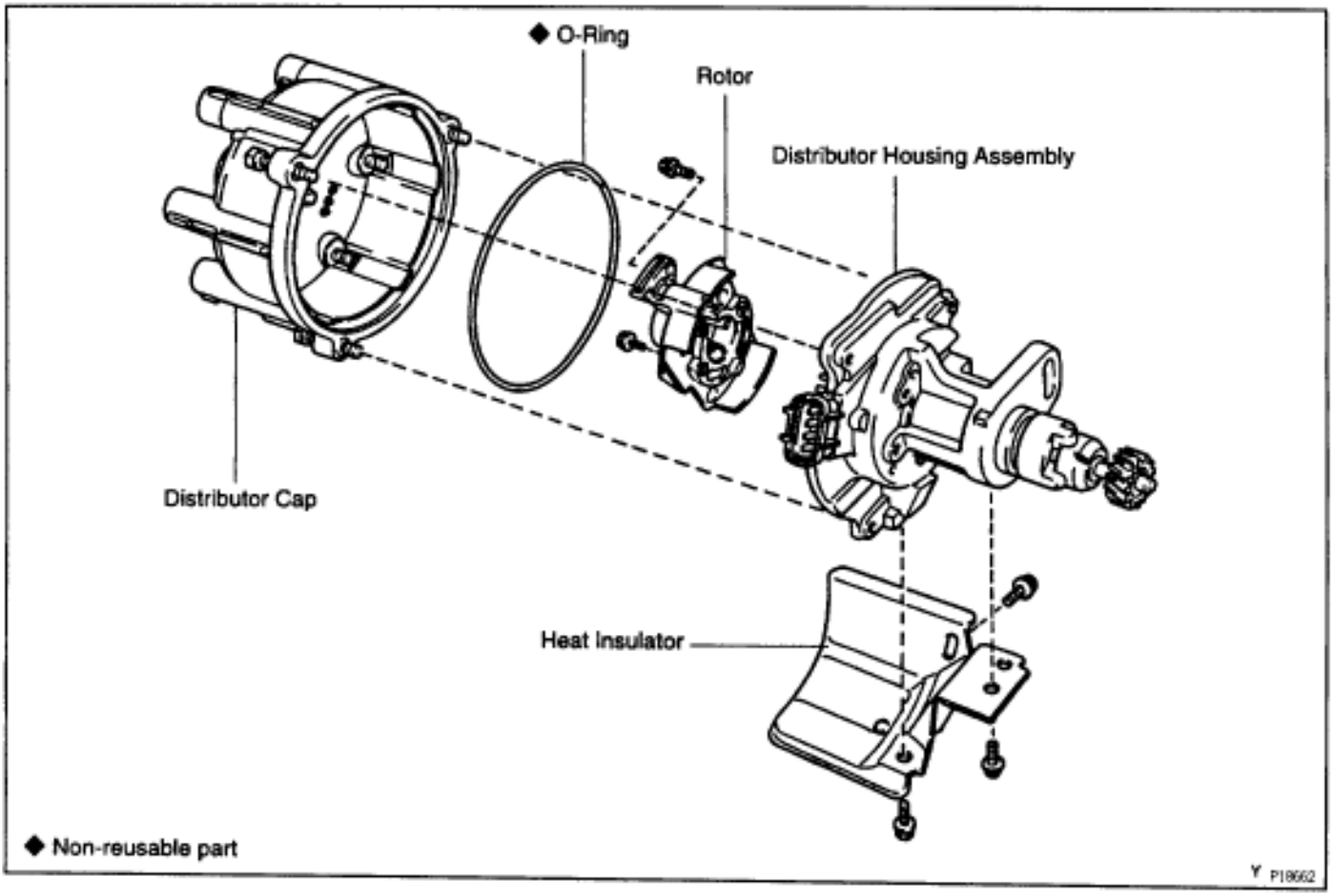

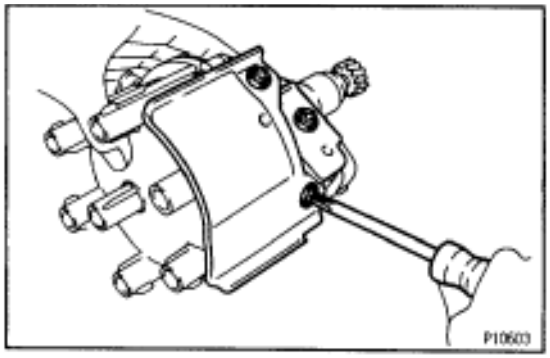

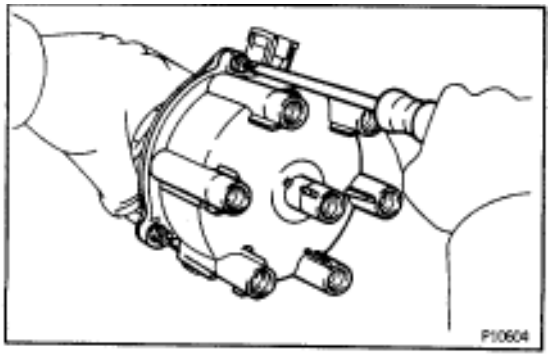

DISTRIBUTOR DISASSEMBLY

Assembly is in the reverse order of disassembly.

1. REMOVE HEAT INSULATOR

Remove the 3 screws and heat insulator.

2. REMOVE DISTRIBUTOR CAP

Loosen the 3 bolts, and remove the distributor cap and O–ring.

ASSEMBLY HINT: Use a new O–ring.

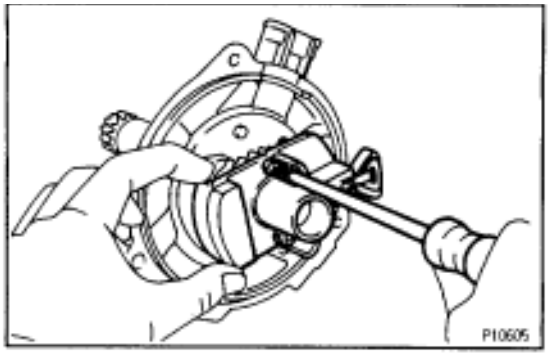

3. REMOVE ROTOR

Remove the 2 screws and rotor.

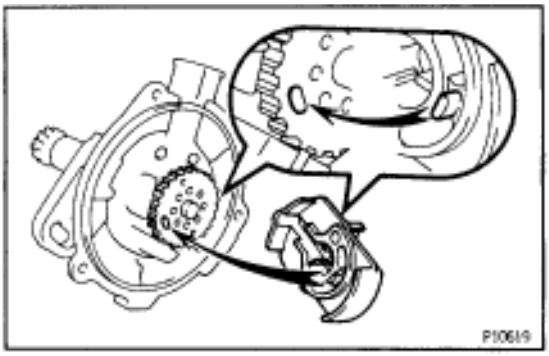

ASSEMBLY HINT: Align the hollow of the signal rotor with the protrusion of the rotor.

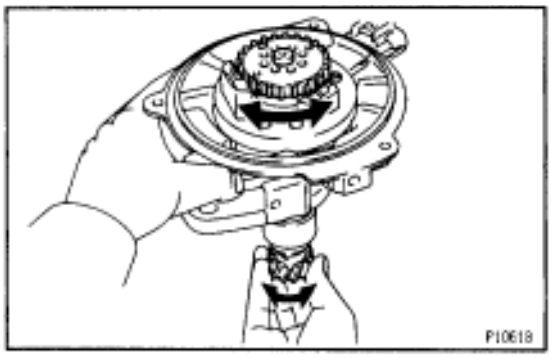

DISTRIBUTOR INSPECTION

INSPECT SHAFT

Turn the shaft and check that it is not rough or worn.

If it feels rough or worn, replace the distributor housing assembly.

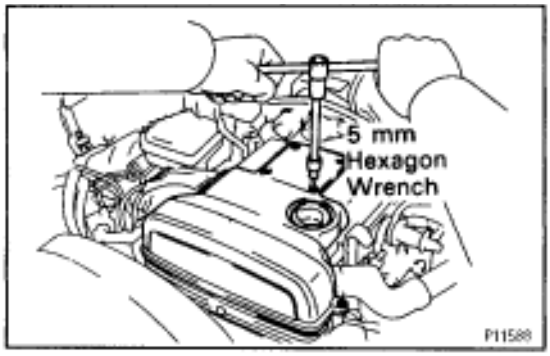

DISTRIBUTOR INSTALLATION

1. REMOVE NO.3 TIMING BELT COVER

(a) Remove the oil filler cap.

(b) Using a 5 mm hexagon wrench, remove the 6 bolts and timing belt cover.

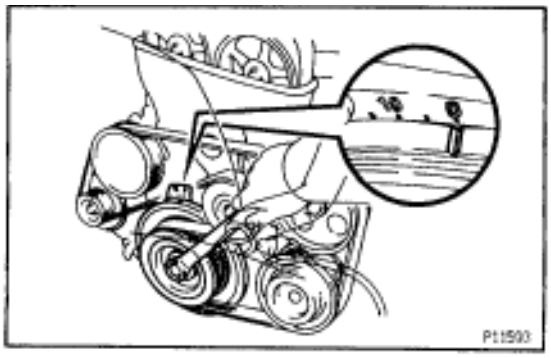

2. SET NO.1 CYLINDER TO TDC/COMPRESSION

(a) Turn the crankshaft pulley, and align its groove with timing mark ”O” of the No.1 timing belt cover.

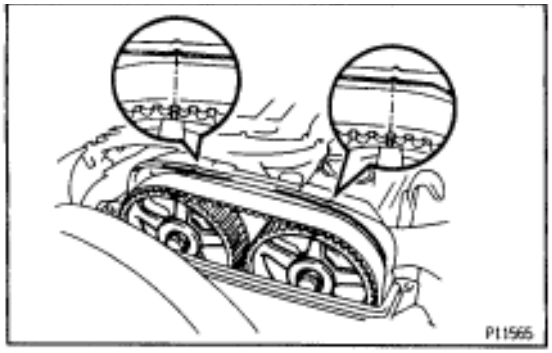

(b) Check that the timing marks of the camshaft timing pulleys and No.4 timing belt cover are aligned.
If not, turn the crankshaft 1 revolution (360˚) and align the mark as above.

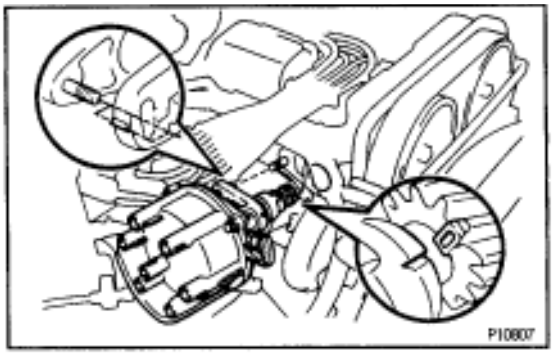

3. INSTALL DISTRIBUTOR

(a) Install a new O–ring to the distributor housing.
(b) Apply a light coat of engine oil on the O–ring.
(c) Align the marks of the drive gear and distributor housing.
(d) Insert the distributor, aligning the protrusion of the flange with that of the stud bolt on the cylinder head.
(e) Install the distributor with the nut. Lightly tighten the nut.

4. REINSTALL NO.3 TIMING BELT COVER

5. CONNECT HIGH–TENSION CORDS TO DISTRIBUTOR

Connect the 7 high–tension cords to the distributor.

Firing order:

1 – 5 – 3 – 6 – 2 – 4

6. CONNECT DISTRIBUTOR CONNECTOR

7. ADJST IGNITION TIMING

(See ignition timing inspection and adjustment)

SERVICE SPECIFICATIONS
SERVICE DATA

Firing order	–		1 – 5 – 3 – 6 – 2 – 4
High–tension cord	Resistance	Limit	25 kΩ per cord
Spark plug	Recommended spark plug	ND	PK16R11
		NGK	BKR5EP11
	Correct electrode gap for new plug		1.1 mm (0.043 in.)
	Maximum electrode gap for used plug		1.3 mm (0.051 in.)
Ignition coil	Primary coil resistance	at cold	0.36–0.55 Ω
		at hot	0.45–0.65 Ω
	Secondary coil resistance	at cold	9.0–15.4 kΩ
		at hot	11.4–18.1 kΩ
Distributor	Air gap		0.2–0.5 mm (0.008–0.020 in.)
	Pickup coil resistance	at cold G1–G⊖	125–200 Ω
		G2–G⊖	125–200 Ω
		NE–G⊖	155–250 Ω
		at hot G1–G⊖	160–235 Ω
		G2–G⊖	160–235 Ω
		NE–G⊖	190–290 Ω

TORQUE SPECIFICATIONS

Part tightened	N·m	kgf·cm	ft·lbf
Spark plug x Cylinder head	18	180	13

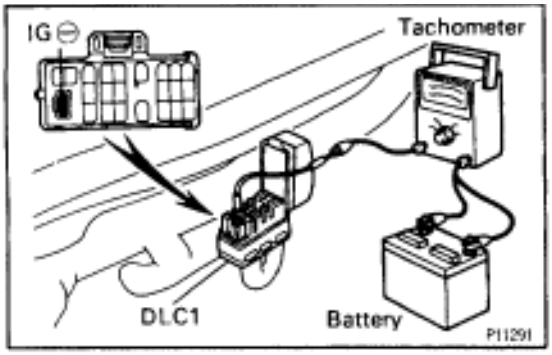

(2JZ–GTE)

PRECAUTION

1. **With a tachometer connected to the system, connect the tester probe of the tachometer to terminal IG⊖ of the DLC1.**

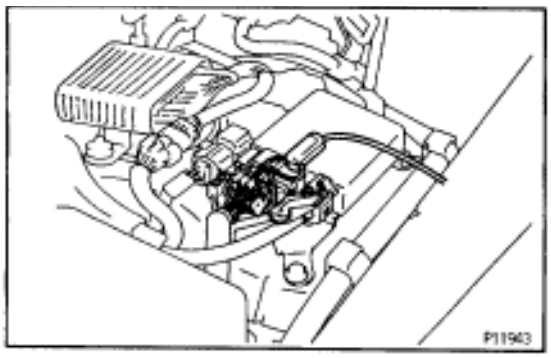

2. **With a timing light connected to the system, connect the tester probe to the green wire of the igniter**
3. **As some tachometers are not compatible with this ignition system, we recommend that you confirm the compatibility of your unit before use.**
4. **Never allow the tachometer terminals to touch ground as it could result in damage to the igniter and/or ignition coil.**
5. **Do not disconnect the battery while the engine is running.**
6. **Check that the igniter is properly grounded to the body.**

PREPARATION

SST(SPECIAL SERVICE TOOLS)

	09240–00020 Wire Gauge Set	

RECOMMENDED TOOLS

	09082–00050 TOYOTA Electrical Tester Set ◆	
	09200–00010 Engine Adjust Kit ◆	

EQUIPMENT

Megger insulation resistance meter	Spark plug
Spark plug cleaner	
Thermometer	

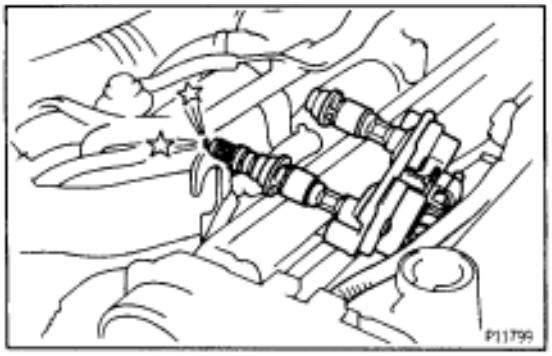

ON–VEHICLE INSPECTION

SPARK TEST

CHECK THAT SPARK OCCURS

(a) Remove the ignition coil. (See ignition coil removal)
(b) Remove the spark plug.
(c) Install the spark plug to the ignition coil, and connect the ignition coil connecter.
(d) Ground the spark plug.
(e) Check if spark occurs while engine is being cranked.
HINT: To prevent gasoline from being injected from injectors during this test, crank the engine for no more than 1–2 seconds at time.
If the spark does not occur, do the test as follows:

SPARK TEST

↓ NO

CHECK CONNECTION OF IGNITION COIL, IGNITER → BAD → Connect securely.

↓ OK

CHECK POWER SUPPLY TO IGNITION COIL AND IGNITER
1. Turn ignition switch to ON.
2. Check that there is battery voltage at ignition coil positive (+) terminal.

→ BAD → Check wiring between ignition switch to ignition coil and igniter.

↓ OK

CHECK RESISTANCE OF IGNITION COIL (See page IG–23)

Resistance:	Cold	Hot
Primary	0.54 – 0.84 Ω	0.68 – 0.98 Ω

→ BAD → Replace the ignition coil.

↓ OK

CHECK RESISTANCE OF CAMSHAFT AND CRANKSHAFT POSITION SENSOR (See page IG–24)

Resistance:	Cold	Hot
NIPPONDENSO	835 – 1,400 Ω	1,060 – 1,645 Ω
AISAN	985 – 1,600 Ω	1,265 – 1,890 Ω

→ BAD → Replace the camshaft and crankshaft position sensor.

↓ OK

CHECK IGT SIGNAL FROM ECM (See page EG–519)

→ BAD → Check wiring between ECM,and igniter, and then try another ECM.

↓ OK

TRY ANOTHER IGNITER

ADJUST IGNITION TIMING

(See ignition timing inspection and adjustment)

SPARK PLUGS INSPECTION

NOTICE:

- **Never use a wire brush for cleaning.**
- **Never attempt to adjust the electrode gap on used a spark plug.**
- **Spark plugs should be replaced every 100,000 km (60,000 miles).**

1. REMOVE IGNITION COILS ASSEMBLIES
(See ignition coils removal)

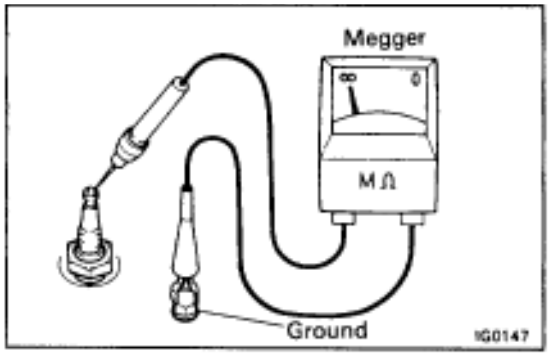

2. INSPECT ELECTRODE

Using a megger (insulation resistance meter), measure the insulation resistance.

Standard correct insulation resistance:

10 M Ω or more

If the resistance is less than specified, proceed to step 4.

HINT: If a megger is not available, the following simple method of inspection provides fairly accurate results.

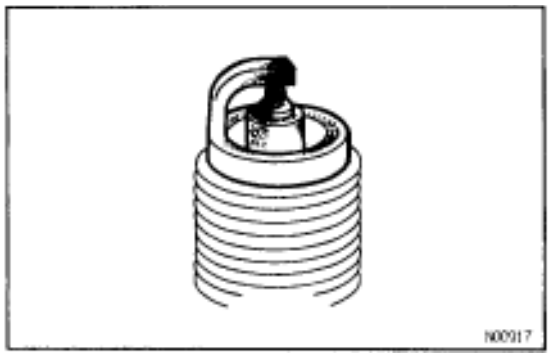

Simple Method:

(a) Quickly race the engine 5 times to 4,000 rpm.
(b) Remove the spark plug.
(c) Visually check the spark plug.
If the electrode is dry...OK
If the electrode is wet...Proceed to step 4
(d) Reinstall the spark plug.

3. REMOVE SPARK PLUGS

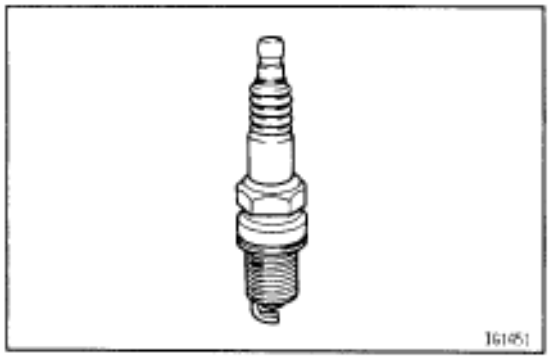

4. VISUALLY INSPECT SPARK PLUGS

Check the spark plug for thread damage and insulator damage.

If abnormal, replace the spark plug.

Recommended spark plug:

ND
PK20R11
NGK
BKR6EP11

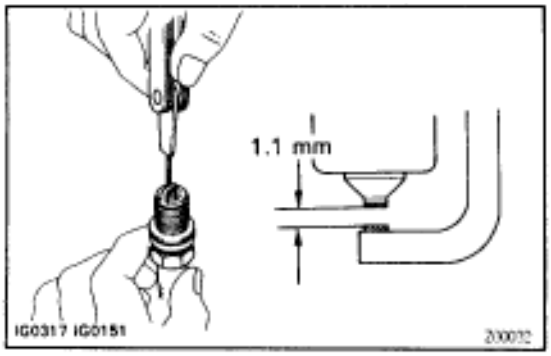

5. INSPECT ELECTRODE GAP

Maximum electrode gap for used spark plug:

1.3 mm (0.051 in.)

Correct electrode gap for new spark plug:

1.1 mm (0.043 in.)

NOTICE: If adjusting the gap of a new spark plug, bend only the base of the ground electrode. Do not touch the tip. Never attempt to adjust the gap on the used plug.

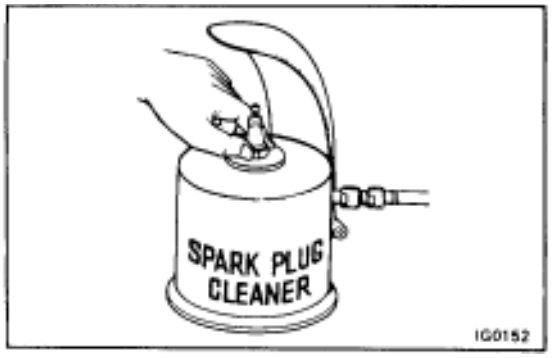

6. CLEAN SPARK PLUGS

If the electrode has traces of wet carbon, allow it to dry and then clean with a spark plug cleaner.

Air pressure:

Below 588 kPa (6 kgf/cm^2, 85 psi)

Duration:

20 seconds or less

HINT: If there are traces of oil, remove it with gasoline before using the spark plug cleaner.

7. REINSTALL SPARK PLUGS

Torque: 18 N·m (180 kgf·cm, 13 ft·lbf)

8. REINSTALL IGNITION COILS ASSEMBLIES

(See ignition coils installation)

IGNITION COIL INSPECTION

NOTICE: ”Cold” and ”Hot” in the following sentences express the temperature of the coils themselves. ”Cold” is from –10°C (14°F) to 50°C (122°F) and ”Hot” is from 50°C (122°F) to 100°C (212°F).

1. REMOVE NO.3 TIMING BELT COVER

2. DISCONNECT IGNITION COIL CONNECTORS

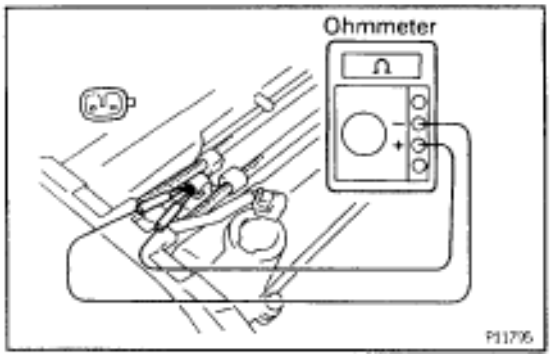

3. INSPECT PRIMARY COIL RESISTANCE

Using an ohmmeter, measure the resistance between the positive (+) and negative (–) terminals.

Primary coil resistance:

Cold

0.54 – 0.84 Ω

Hot

0.68 – 0.98 Ω

If the resistance is not as specified, replace the ignition coil.

4. RECONNECT IGNITION COIL CONNECTORS

5. REINSTALL NO.3 TIMING BELT COVER

CAMSHAFT POSITION SENSORS INSPECTION

NOTICE: ”Cold” and ”Hot” in the following sentences express the temperature of the sensors themselves. ”Cold” is from –10°C (14°F) to 50°C (122°F) and ”Hot” is from 50°C (122°F) to 100°C (212°F).

1. DISCONNECT CAMSHAFT POSITION SENSOR CONNECTORS

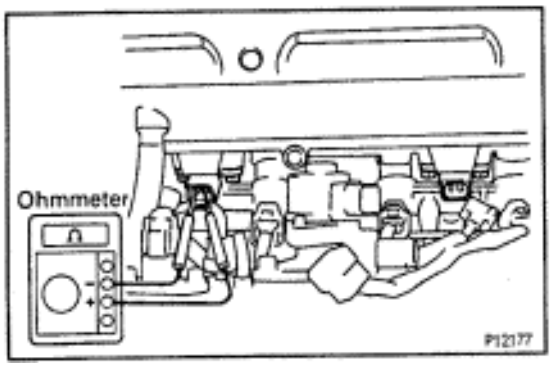

2. INSPECT CAMSHAFT POSITION SENSOR RESISTANCE

Using an ohmmeter, measure the resistance between terminals.

Resistance:

Cold

NIPPONDENSO

835–1,400 Ω

AISAN

985–1,600 Ω

Hot

NIPPONDENSO

1,060–1,645 Ω

AISAN

1,265–1,890 Ω

If the resistance is not as specified, replace the camshaft position sensor.

3. RECONNECT CAMSHAFT POSITION SENSOR CONNECTORS

CRANKSHAFT POSITION SENSOR INSPECTION

NOTICE: ”Cold” and ”Hot” in the following sentences express the temperature of the sensors themselves. ”Cold” is from –10°C (14°F) to 50°C (122°F) and ”Hot” is from 50°C (122°F) to 100°C (212°F).

1. **REMOVE NO.2 AIR TUBE FOR CAC**
2. **DISCONNECT CRANKSHAFT POSITION SENSOR CONNECTOR**
3. **INSPECT CRANKSHAFT POSITION SENSOR RESISTANCE**

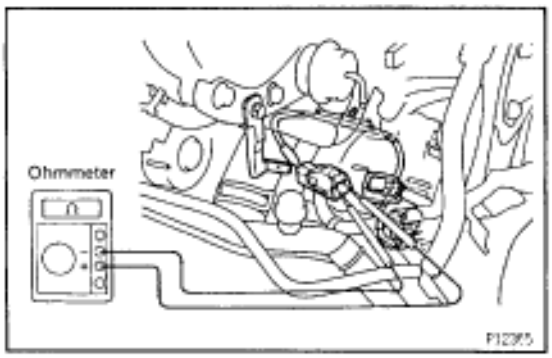

Using an ohmmeter, measure the resistance between terminals.

Resistance:

Cold

NIPPONDENSO

835–1,400 Ω

AISAN

985–1,600 Ω

Hot

NIPPONDENSO

1,060–1,645 Ω

AISAN

1,265–1,890 Ω

If the resistance is not as specified, replace the crankshaft position sensor.

4. **RECONNECT CRANKSHAFT POSITION SENSOR CONNECTOR**
5. **REINSTALL NO.2 AIR TUBE FOR CAC**

IGNITER INSPECTION

(See procedure Spark Test on page IG–22)

IGNITION COIL

COMPONENTS FOR REMOVAL AND INSTALLATION

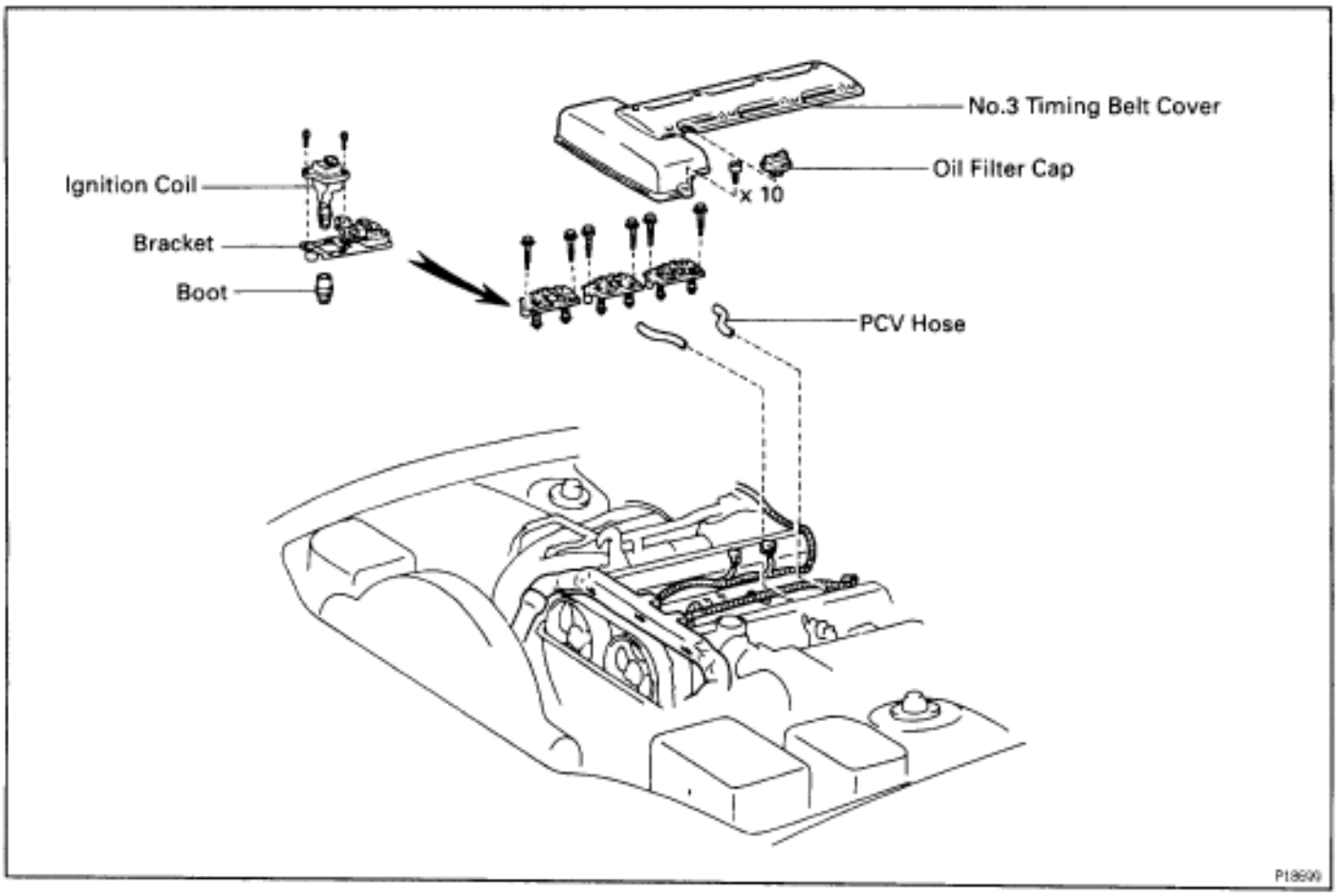

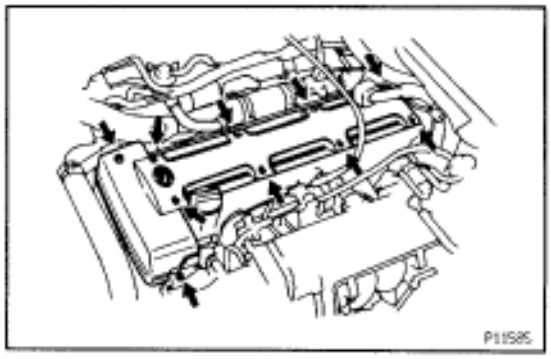

IGNITION COILS REMOVAL

Installation is in the reverse order of removal.

1. REMOVE NO.3 TIMING BELT COVER

(a) Remove the oil filler cap.

(b) Using a 5 mm hexagon wrench, remove the 10 bolts, belt cover and gasket.

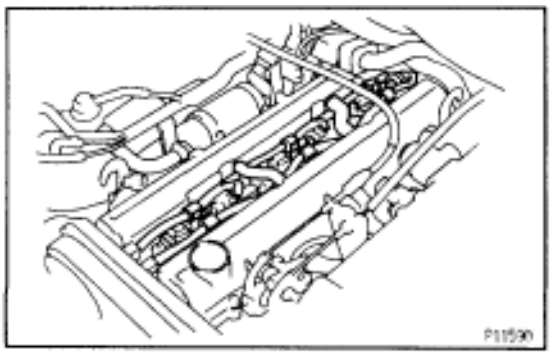

2. REMOVE PCV HOSES

Remove the 2 PCV hoses.

3. DISCONNECT IGNITION COIL CONNECTORS

(a) Disconnect the engine wire from the 6 clamps on the ignition coils.

(b) Disconnect the 6 ignition coil connectors.

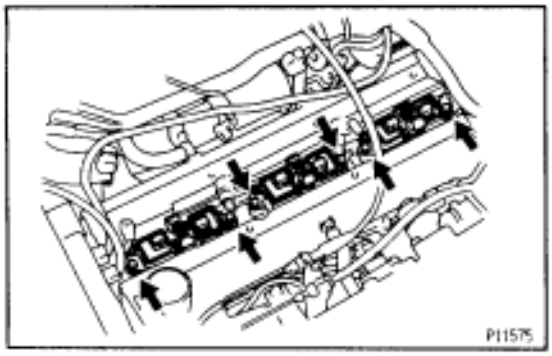

4. REMOVE BRACKET IGNITION COILS ASSEMBLIES

Remove the 2 bolts and 2 ignition coils assembly.

Torque:

Bracket to cylinder head cover

8.8 N·m (90 kgf·cm, 78 in.·lbf)

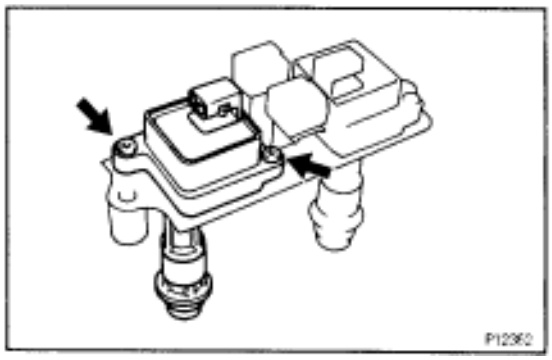

5. REMOVE IGNITION COILS FROM BRACKET

(a) Remove the rubber boot from the ignition coil.

(b) Remove the 2 screws and ignition coil.

CAMSHAFT POSITION SENSOR
COMPONENTS FOR REMOVAL AND INSTALLATION

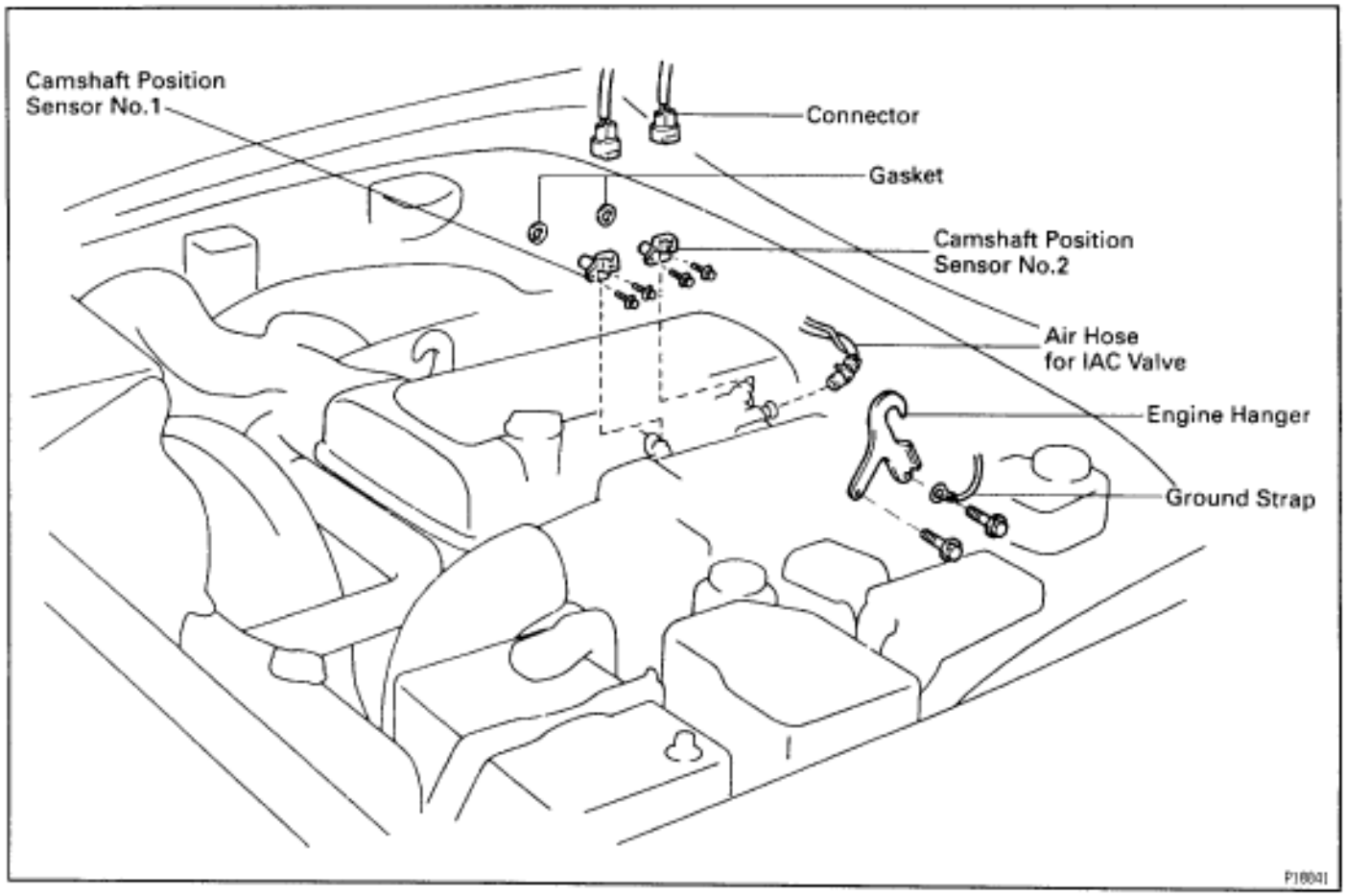

CAMSHAFT POSITION SENSOR REMOVAL

Installation is in the reverse order of removal.

1. **DISCONNECT IAC VALVE CONNECTOR**
2. **DISCONNECT AIR HOSE FROM IAC VALVE**
3. **REMOVE ENGINE HANGER**
   Remove the 2 bolts, ground strap and engine hanger.
   Torque: 39 N·m (400 kgf·cm, 29 ft·lbf)
4. **DISCONNECT CAMSHAFT POSITION SENSOR CONNECTORS**
5. **REMOVE CAMSHAFT POSITION SENSORS**
   Remove the 4 bolts, 2 camshaft position sensors and 2 gaskets.
   Torque: 6.4 N·m (65 kgf·cm, 56 in.·lbf)

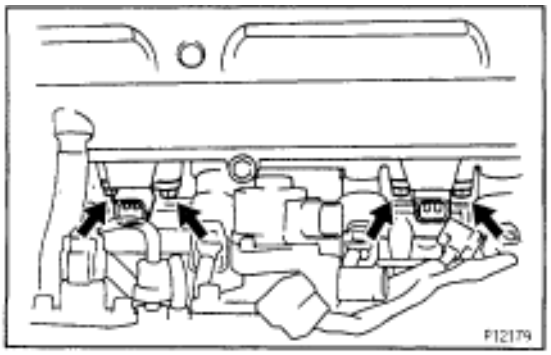

CRANKSHAFT POSITION SENSOR
COMPONENTS FOR REMOVAL AND INSTALLATION

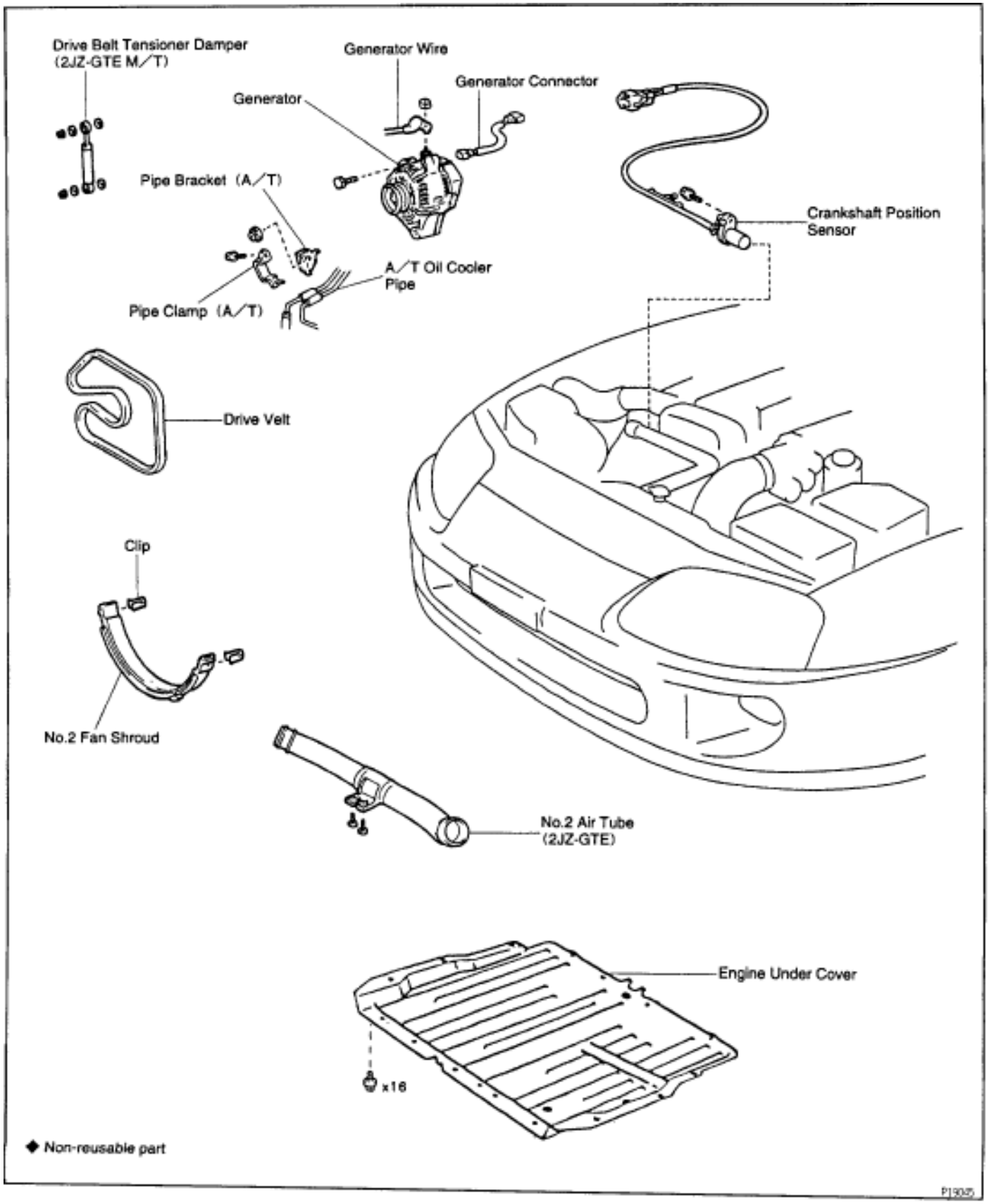

CRANKSHAFT POSITION SENSOR REMOVAL

Installation is in the reverse order of removal.

1. REMOVE GENERATOR
(See generator removal in Charging System)

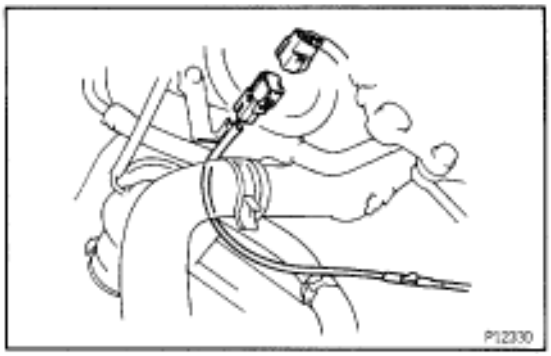

2. DISCONNECT CRANKSHAFT POSITION SENSOR CONNECTOR

(a) Disconnect the sensor connector from the bracket.
(b) Disconnect the sensor connector from the wiring connector.

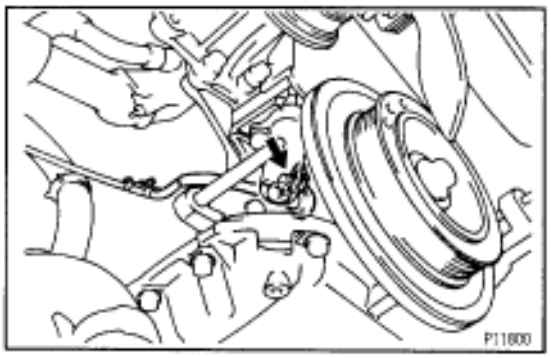

3. REMOVE CRANKSHAFT POSITION SENSOR

(a) Disconnect the wire clamp from the cylinder block.
(b) Remove the bolt and crankshaft position sensor.
Torque: 8.8 N·m (90 kgf·cm, 78 in.·lbf)

SERVICE SPECIFICATIONS

SERVICE DATA

Firing order	–		1 – 5 – 3 – 6 – 2 – 4
Spark plug	Recommended spark plug	ND	PK20R11
		NGK	BKR6EP11
	Correct electrode gap for new plug		1.1 mm (0.043 in.)
	Maximum electrode gap for used plug		1.3 mm (0.051 in.)
Ignition coil	Primary coil resistance	at cold	0.54–0.84 Ω
		at hot	0.68–0.98 Ω
Camshaft position sensor	Resistance	at cold	835–1,400 Ω for NIPPONDENSO 985–1,600 Ω for AISAN
		at hot	1,060–1,645 Ω for NIPPONDENSO 1,265–1,890 Ω for AISAN
Crankshaft position sensor	Resistance	at cold	835–1,400 Ω for NIPPONDENSO 985–1,600 Ω for AISAN
		at hot	1,060–1,645 Ω for NIPPONDENSO 1,265–1,890 Ω for AISAN

TORQUE SPECIFICATIONS

Part tightened	N·m	kgf·cm	ft·lbf
Ignition coil bracket x Cylinder head	8.8	90	78 in.·lbf
Ignition coil x Ignition coil bracket	2.5	35	3.4 in.·lbf
Camshaft position sensor x Cylinder head	8.8	90	78 in.·lbf
Engine hanger x Cylinder head	39	400	29
Crankshaft position sensor x Oil pump	8.8	90	78 in.·lbf

INTRODUCTION

HOW TO USE THIS MANUAL

INDEX

An INDEX is provided on the first page of each section to guide you to the item to be repaired. To assist you in finding your way through the manual, the Section Title and major heading are given at the top of every page.

GENERAL DESCRIPTION

At the beginning of each section, a general Description is given that pertains to all repair operations contained in that section.

Read these precautions before starting any repair task.

TROUBLESHOOTING

TROUBLESHOOTING tables are included for each system to help you diagnose the problem and find the cause. The fundamentals of how to proceed with troubleshooting are described on page IN–19. Be sure to read this before performing troubleshooting.

PREPARATION

Preparation lists the SST (Special Service Tools), recommended tools, equipment, lubricant and SSM (Special Service Materials) which should be prepared before beginning the operation and explains the purpose of each one.

REPAIR PROCEDURES

Most repair operations begin with an overview illustration. It identifies the components and shows how the parts fit together.

Example:

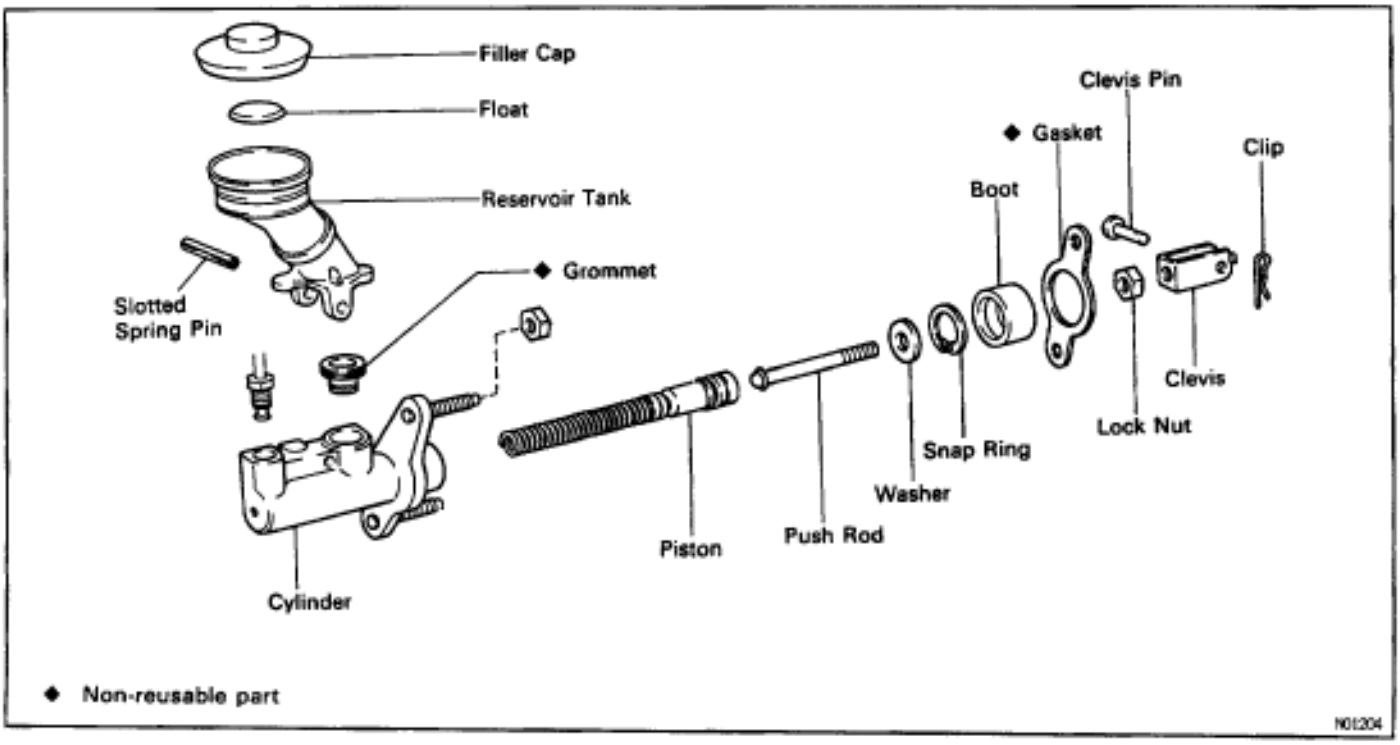

The procedures are presented in a step–by–step format:

- The illustration shows what to do and where to do it.
- The task heading tells what to do.
- The detailed text tells how to perform the task and gives other information such as specifications and warnings.

Example:

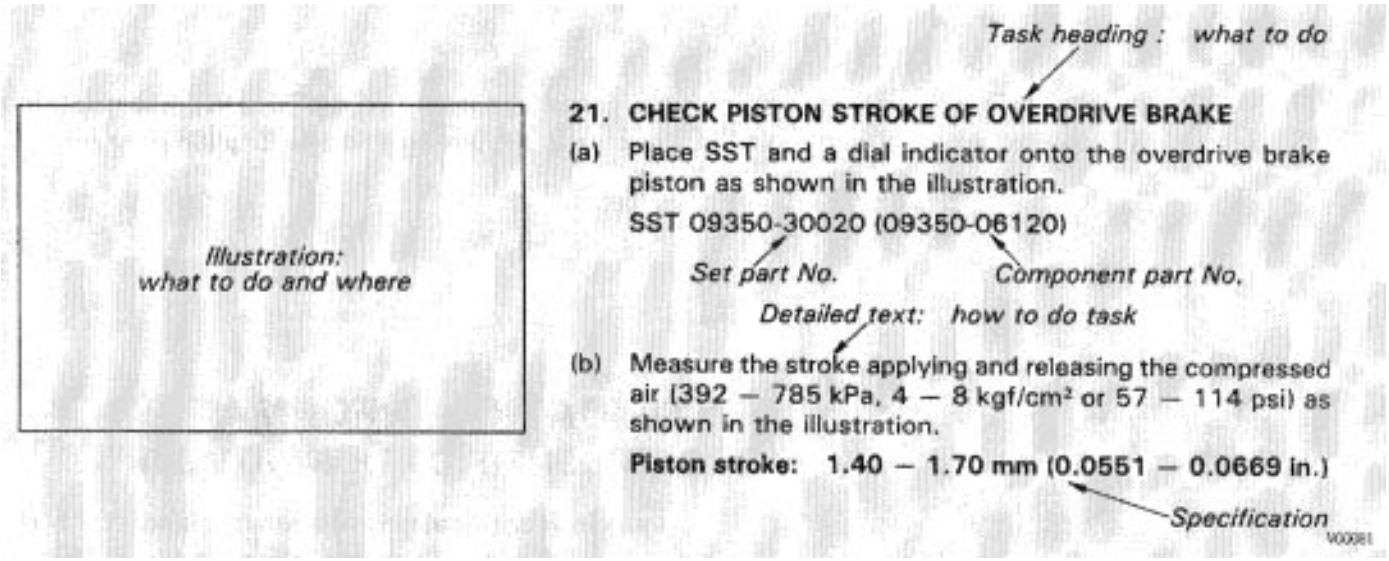

This format provides the experienced technician with a FAST TRACK to the information needed. The upper case task heading can be read at a glance when necessary, and the text below it provides detailed information. Important specifications and warnings always stand out in bold type.

REFERENCES

References have been kept to a minimum. However, when they are required you are given the page to refer to.

SPECIFICATIONS

Specifications are presented in bold type throughout the text where needed. You never have to leave the procedure to look up your specifications. They are also found at the end of each section, for quick reference.

CAUTIONS, NOTICES, HINTS:

- CAUTIONS are presented in bold type, and indicate there is a possibility of injury to you or other people.
- NOTICES are also presented in bold type, and indicate the possibility of damage to the components being repaired.
- HINTS are separated from the text but do not appear in bold. They provide additional information to help you perform the repair efficiently.

SI UNIT

The UNITS given in this manual are primarily expressed according to the SI UNIT (International System of Unit), and alternately expressed in the metric system and in the English System.

Example:

Torque: 30 N·m (310 kgf·cm, 22 ft·lbf)

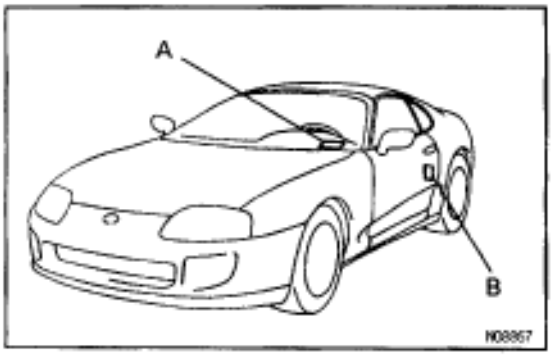

IDENTIFICATION INFORMATION

VEHICLE IDENTIFICATION NUMBER

The vehicle identification number is stamped on the vehicle identification number plate and certification label.

A. Vehicle Identification Number Plate

B. Certification Label

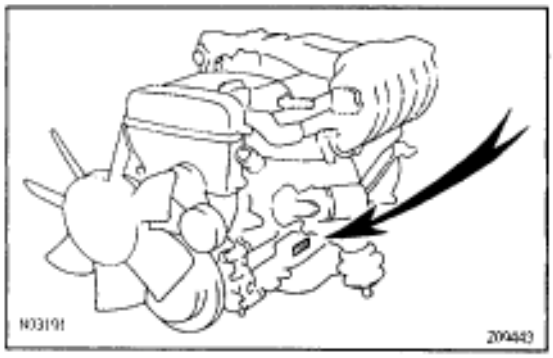

ENGINE SERIAL NUMBER

The engine serial number is stamped on the engine block as shown.

CAUTIONS, NOTICES, HINTS:

- CAUTIONS are presented in bold type, and indicate there is a possibility of injury to you or other people.
- NOTICES are also presented in bold type, and indicate the possibility of damage to the components being repaired.
- HINTS are separated from the text but do not appear in bold. They provide additional information to help you perform the repair efficiently.

SI UNIT

The UNITS given in this manual are primarily expressed according to the SI UNIT (International System of Unit), and alternately expressed in the metric system and in the English System.

Example:

Torque: 30 N·m (310 kgf·cm, 22 ft·lbf)

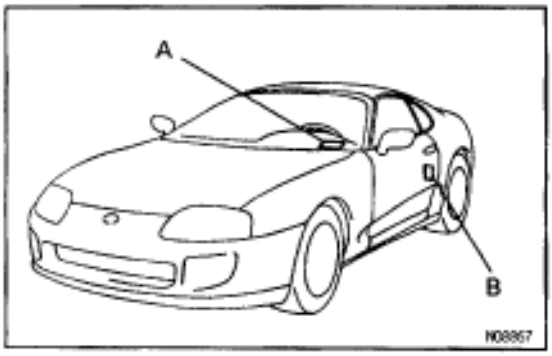

IDENTIFICATION INFORMATION

VEHICLE IDENTIFICATION NUMBER

The vehicle identification number is stamped on the vehicle identification number plate and certification label.

A. Vehicle Identification Number Plate

B. Certification Label

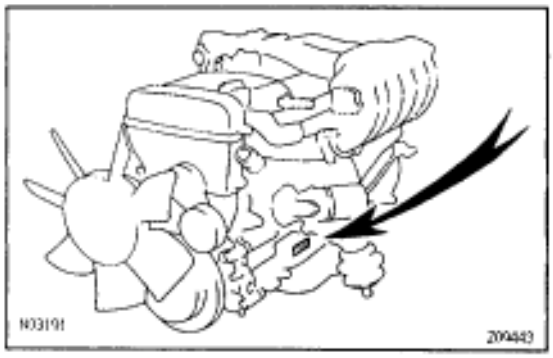

ENGINE SERIAL NUMBER

The engine serial number is stamped on the engine block as shown.

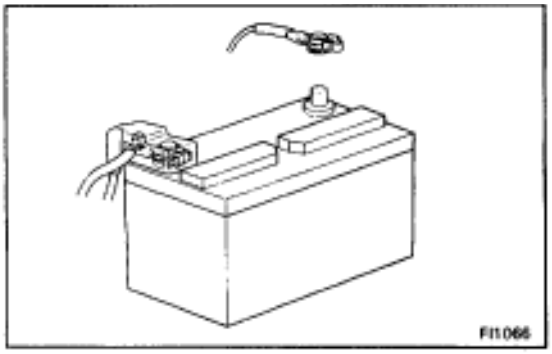

GENERAL REPAIR INSTRUCTIONS

1. Use fender, seat and floor covers to keep the vehicle clean and prevent damage.
2. During disassembly, keep parts in the appropriate order to facilitate reassembly.
3. Observe the following:
   (a) Before performing electrical work, disconnect the negative (–) terminal cable from the battery.
   (b) If it is necessary to disconnect the battery for inspection or repair, always disconnect the negative (–) terminal cable which is grounded to the vehicle body.
   (c) To prevent damage to the battery terminal, loosen the cable nut and raise the cable straight up without twisting or prying it.
   (d) Clean the battery terminals and cable ends with a clean shop rag. Do not scrape them with a file or other abrasive objects.
   (e) Install the cable ends to the battery terminals with the nut loose, and tighten the nut after installation. Do not use a hammer to tap the cable ends onto the terminals.
   (f) Be sure the cover for the positive (+) terminal is properly in place.
4. Check hose and wiring connectors to make sure that they are secure and correct.
5. Non–reusable parts
   (a) Always replace cotter pins, gaskets, O–rings and oil seals etc. with new ones.
   (b) Non–reusable parts are indicated in the component illustrations by the "♦" symbol.

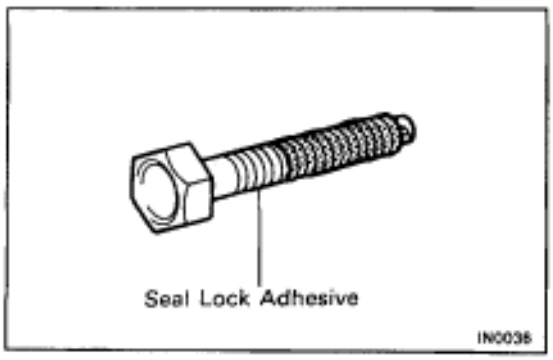

6. Precoated parts
   Precoated parts are bolts and nuts, etc. that are coated with a seal lock adhesive at the factory.
   (a) If a precoated part is retightened, loosened or caused to move in any way, it must be recoated with the specified adhesive.

(b) When reusing precoated parts, clean off the old adhesive and dry with compressed air. Then apply the specified seal lock adhesive to the bolt, nut or threads.
(c) Precoated parts are indicated in the component illustrations by the "• " symbol.

7. When necessary, use a sealer on gaskets to prevent leaks.
8. Carefully observe all specifications for bolt tightening torques. Always use a torque wrench.
9. Use of special service tools (SST) and special service materials (SSM) may be required, depending on the nature of the repair. Be sure to use SST and SSM where specified and follow the proper work procedure. A list of SST and SSM can be found in the preparation part at the front of each section in this manual.

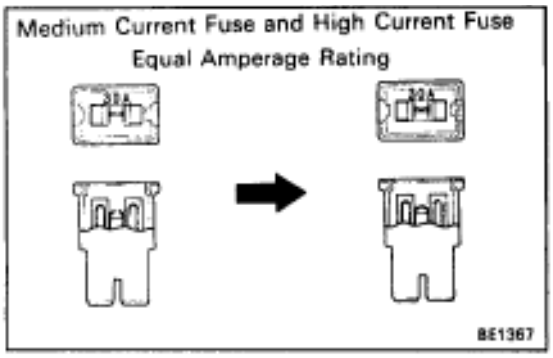

10. When replacing fuses, be sure the new fuse has the correct amperage rating. DO NOT exceed the rating or use one with a lower rating.

Illustration	Symbol	Part Name	Abbreviation
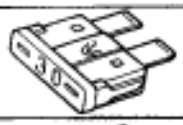 BE5594	 IN0365	FUSE	FUSE
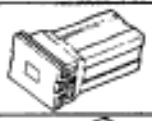 BE5595	 IN0366	MEDIUM CURRENT FUSE	M-FUSE
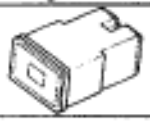 BE5596	 IN0367	HIGH CURRENT FUSE	H-FUSE
 BE5597	 IN0367	FUSIBLE LINK	FL
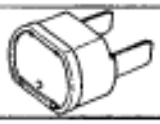 BE5598	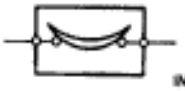 IN0368	CIRCUIT BREAKER	CB

11. Care must be taken when jacking up and supporting the vehicle. Be sure to lift and support the vehicle at the proper locations (See page IN–36).
    (a) If the vehicle is to be jacked up only at the front or rear end, be sure to block the wheels at the opposite end in order to ensure safety.
    (b) After the vehicle is jacked up, be sure to support it on stands. It is extremely dangerous to do any work on a vehicle raised on a jack alone, even for a small job that can be finished quickly.
12. Observe the following precautions to avoid damage to the following parts:
    (a) Do not open the cover or case of the ECU, ECM, PCM or TCM unless absolutely necessary. (If the IC terminals are touched, the IC may be destroyed by static electricity.)

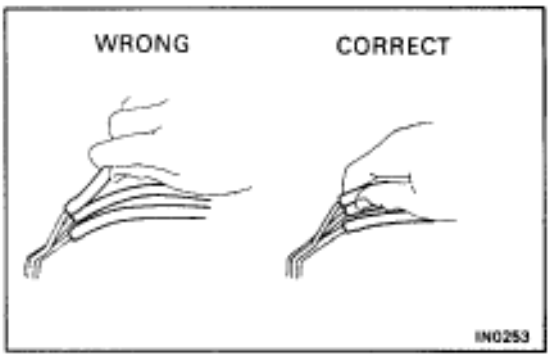

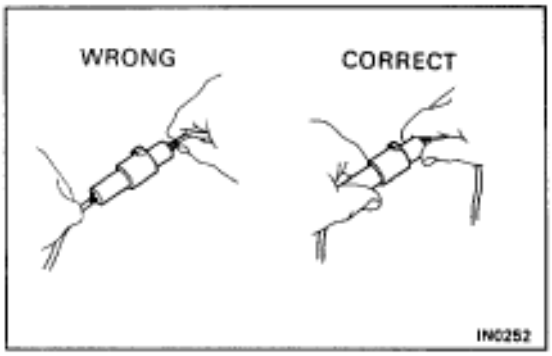

    (b) To disconnect vacuum hoses, pull on the end, not the middle of the hose.
    (c) To pull apart electrical connectors, pull on the connector itself, not the wires.
    (d) Be careful not to drop electrical components, such as sensors or relays. If they are dropped on a hard floor, they should be replaced and not reused.
    (e) When steam cleaning an engine, protect the distributor, air filter, and VCV from water.
    (f) Never use an impact wrench to remove or install temperature switches or temperature sensors.
    (g) When checking continuity at the wire connector, insert the tester probe carefully to prevent terminals from bending.
    (h) When using a vacuum gauge, never force the hose onto a connector that is too large. Use a step–down adapter instead. Once the hose has been stretched, it may leak.

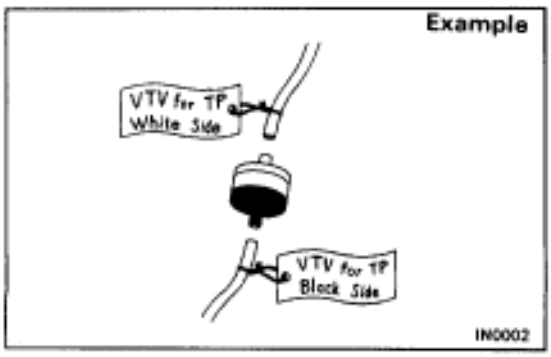

13. Tag hoses before disconnecting them:
    (a) When disconnecting vacuum hoses, use tags to identify how they should be reconnected.
    (b) After completing a job, double check that the vacuum hoses are properly connected. A label under the hood shows the proper layout.

14. Unless otherwise stated, all resistance is measured at an ambient temperature of 20˚C (68˚F). Because the resistance may be outside specifications if measured at high temperatures immediately after the vehicle has been running, measurements should be made when the engine has cooled down.

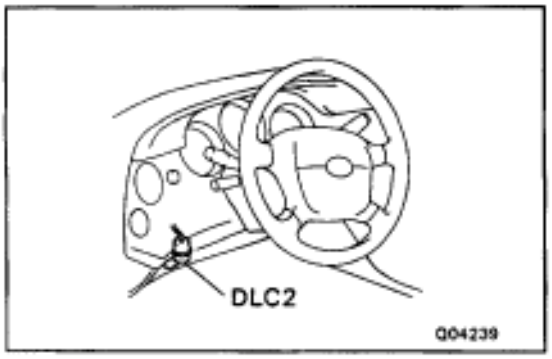

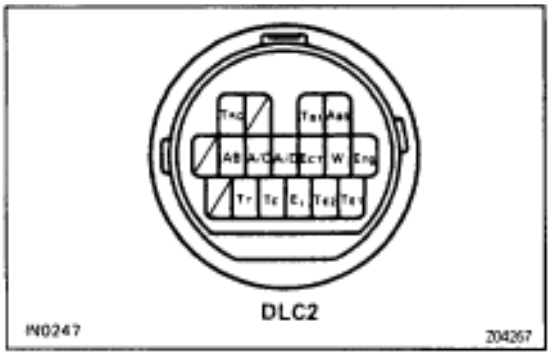

FOR VEHICLES WITH DATA LINK CONNECTOR 2 (DLC2)

The DLC2 is provided inside the cabin (located under the left side instrument panel) as a connector exclusively for diagnosis of data from the Engine, Automatic Transmission, ABS, A/C, Airbag, Traction Control and Cruise Control System to improve serviceability. The DLC1 inside the engine compartment is used for engine adjustment.

Connecting the following terminals of the DLC2 to terminal E_1 selects the diagnosis mode shown.

NOTICE: Never make a mistake with the terminal connection position as this will cause a malfunction.

Terminal	Diagnosis Mode (System)
T_{E1}	Engine and automatic transmission (Normal mode)
T_{E2} and T_{E1}	Engine and automatic transmission (Test mode)
T_C	ABS, A/C, Airbag, Traction Control and Cruise Control System
T_T	Automatic transmission

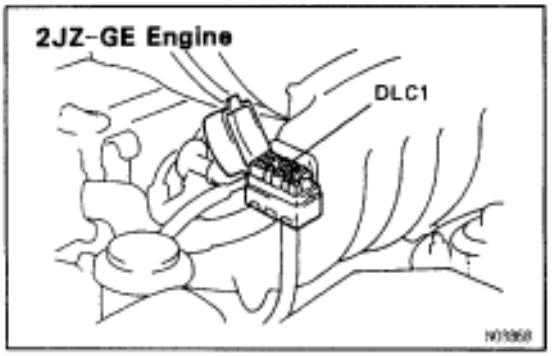

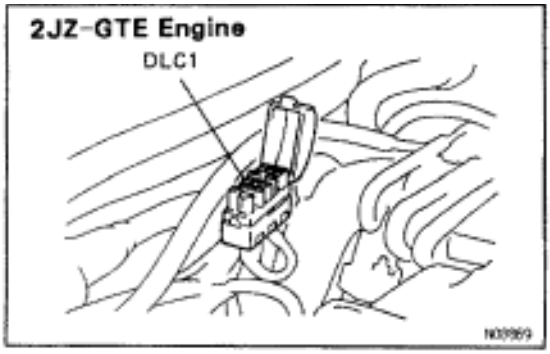

Refer to the respective system for the inspection method.

HINT: By connecting the DLC2 up to a monitor specifically designed for use with the DLC2, the diagnosis result for each system can be read easily.

PRECAUTION

FOR VEHICLES EQUIPPED WITH SRS AIRBAG

The 1995 SUPRA is equipped with an SRS (Supplemental Restraint System), such as the driver airbag, front passenger airbag and seat belt pretensioners.

Failure to carry out service operations in the correct sequence could cause the supplemental restraint system to unexpectedly deploy during servicing, possibly leading to a serious accident.

Further, if a mistake is made in servicing the supplemental restraint system, it is possible the SRS may fail to operate when required. Before servicing (including removal or installation of parts, inspection or replacement), be sure to read the following items carefully, then follow the correct procedure described in this manual.

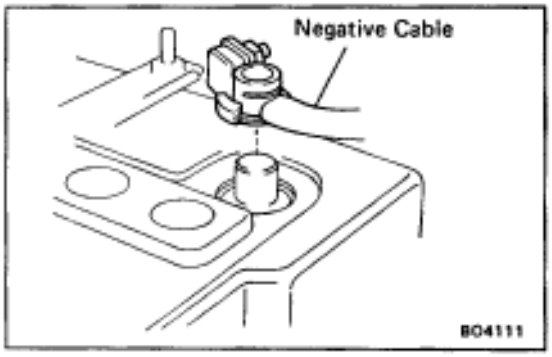

1. Malfunction symptoms of the supplemental restraint system are difficult to confirm, so the diagnostic trouble codes become the most important source of information when troubleshooting. When troubleshooting the supplemental restraint system, always inspect the diagnostic trouble codes before disconnecting the battery (See page RS–41).
2. **Work must be started after 90 seconds from the time the ignition switch is turned to the LOCK position and the negative (–) terminal cable is disconnected from the battery.**
   (The supplemental restraint system is equipped with a back–up power source so that if work is started within 90 seconds of disconnecting the negative (–) terminal cable from the battery, the SRS may deploy.)

When the negative (–) terminal cable is disconnected from the battery, memory of the clock and audio systems will be cancelled. So before starting work, make a record of the contents memorized by the audio memory system. When work is finished, reset the audio systems as before and adjust the clock.

This vehicle has power tilt and power telescopic steering, power seat, power outside rear view mirror and power shoulder belt anchorage, which are all equipped with memory function, it is not possible to make a record of the memory contents. So when the work is finished, therefore it will be necessary to explain this fact to the customer, and ask the customer to adjust the features and reset the memory.

To avoid erasing the memory of each memory system, never use a back–up power supply from outside the vehicle.

3. Even in cases of a minor collision where the SRS does not deploy, the steering wheel pad, front passenger airbag assembly and front airbag sensors should be inspected (See pages RS–10, 20, 30).
4. Never use SRS parts from another vehicle. When replacing parts, replace them with new parts.
5. Before repairs, remove the airbag sensors if shocks are likely to be applied to the sensors during repairs.
6. Never disassemble and repair the front airbag sensors, center airbag sensor assembly, steering wheel pad or front passenger airbag assembly in order to reuse it.
7. If the front airbag sensors, center airbag sensor assembly, steering wheel pad, front passenger airbag assembly or seat belt pretensioners have been dropped, or if there are cracks, dents or other defects in the case, bracket or connector, replace them with new ones.
8. Do not expose the front airbag sensors, center airbag sensor assembly, steering wheel pad, front passenger airbag assembly or seat belt pretensioners directly to hot air or flames.
9. Use a volt/ohmmeter with high impedance (10 kΩ/V minimum) for troubleshooting of the electrical circuit.
10. Information labels are attached to the periphery of the SRS components. Follow the instructions on the notices.
11. After work on the supplemental restraint system is completed, perform the SRS warning light check (See page RS–44).

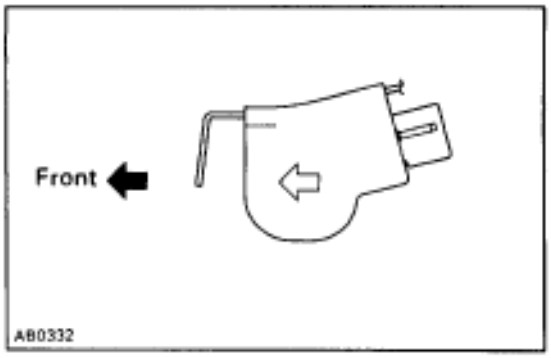

Front Airbag Sensor

1. Never reuse the front airbag sensors involved in a collision that activated the supplemental restraint system. (Replace both left and right airbag sensors.)
2. Install the front airbag sensor with the arrow on the sensor facing toward the front of the vehicle.
3. The front airbag sensor set bolts have been anti–rust treated. When the sensor is removed, always replace the set bolts with new ones.
4. The front airbag sensor is equipped with an electrical connection check mechanism. Be sure to lock this mechanism securely when connecting the connector. If the connector is not securely locked, a malfunction code will be detected by the diagnosis system (See page RS–7).

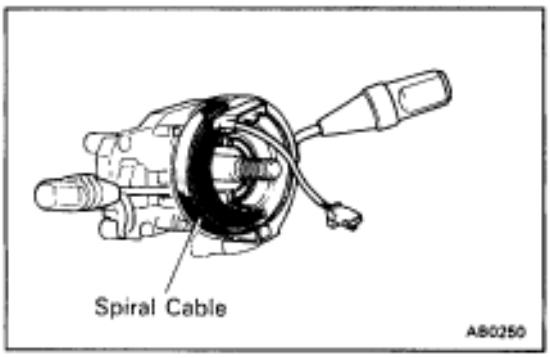

Spiral Cable (in Combination Switch)

The steering wheel must be fitted correctly to the steering column with the spiral cable at the neutral position, otherwise cable disconnection and other troubles may result. Refer to page SR–14 of this manual concerning correct steering wheel installation.

Steering Wheel Pad (with Airbag)

1. **When removing the steering wheel pad or handling a new steering wheel pad, it should be placed with the pad top surface facing up.**
   In this case, the twin–lock type connector lock lever should be in the locked state and care should be taken to place it so the connector will not be damaged. In addition do not store a steering wheel pad on top of another one. Storing the pad with its metallic surface up may lead to a serious accident if the airbag inflates for some reason.
2. **Never measure the resistance of the airbag squib. (This may cause the airbag to deploy, which is very dangerous.)**
3. Grease should not be applied to the steering wheel pad and the pad should not be cleaned with detergents of any kind.
4. Store the steering wheel pad where the ambient temperature remains below 93˚C (200˚F), without high humidity and away from electrical noise.

5. When using electric welding, first disconnect the airbag connector (yellow color and 2 pins) under the steering column near the combination switch connector before starting work.
6. **When disposing of a vehicle or the steering wheel pad alone, the airbag should be deployed using an SST before disposal (See page RS–13). Perform the operation in a safe place away from electrical noise.**

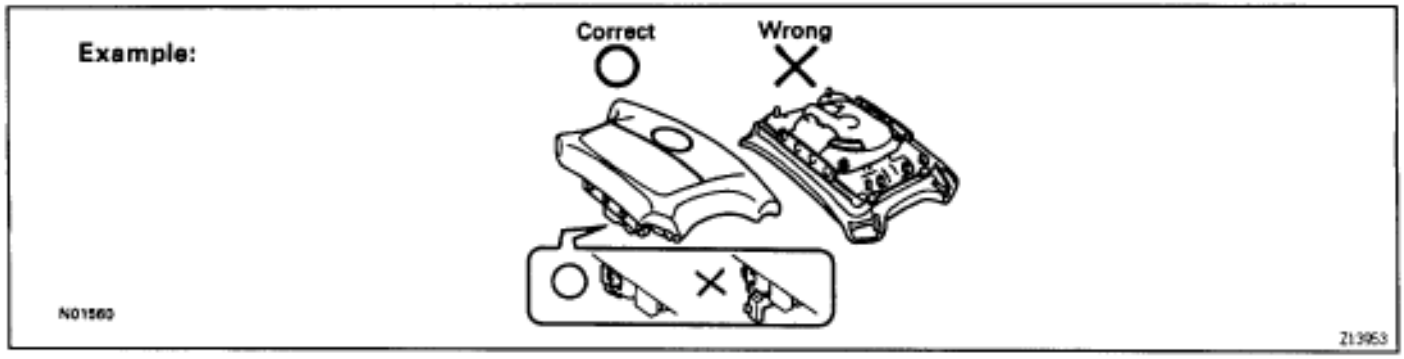

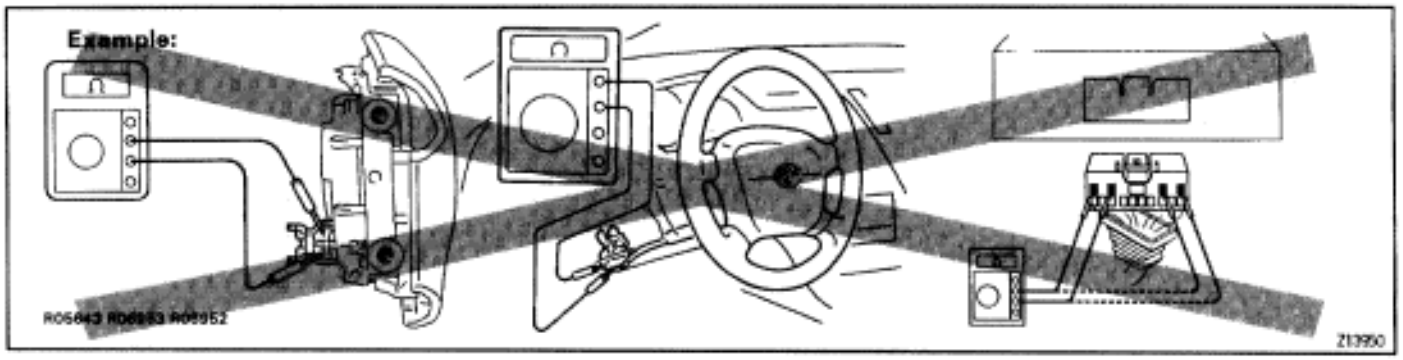

Front Passenger Airbag Assembly

1. **Always store a removed or new front passenger airbag assembly with the airbag door facing up. Storing the airbag assembly with the airbag door facing down could cause a serious accident if the airbag inflates.**
2. **Never measure the resistance of the airbag squib. (This may cause the airbag deploy, which is very dangerous.)**
3. Grease should not be applied to the front passenger airbag assembly and the airbag door should not be cleaned with detergents of any kind.
4. Store the airbag assembly where the ambient temperature remains below 93˚C (200˚F), without high humidity and away from electrical noise.

5. When using electric welding, first disconnect the airbag connector (yellow color and 2 pins) installed on the glove compartment finish plate at the left side of the glove compartment before starting work.
6. **When disposing of a vehicle or the airbag assembly alone, the airbag should be deployed using an SST before disposal (See page RS–25).**
   Perform the operation in a safe place away from electrical noise.

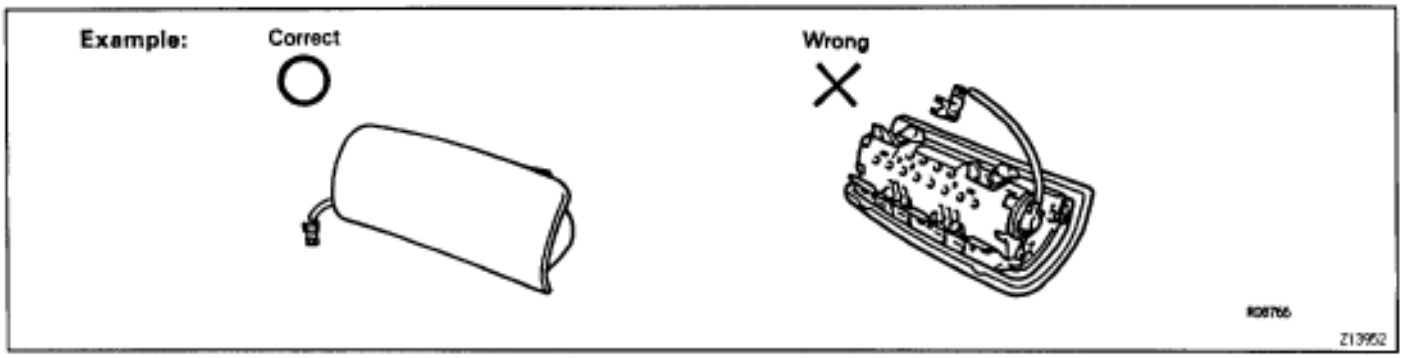

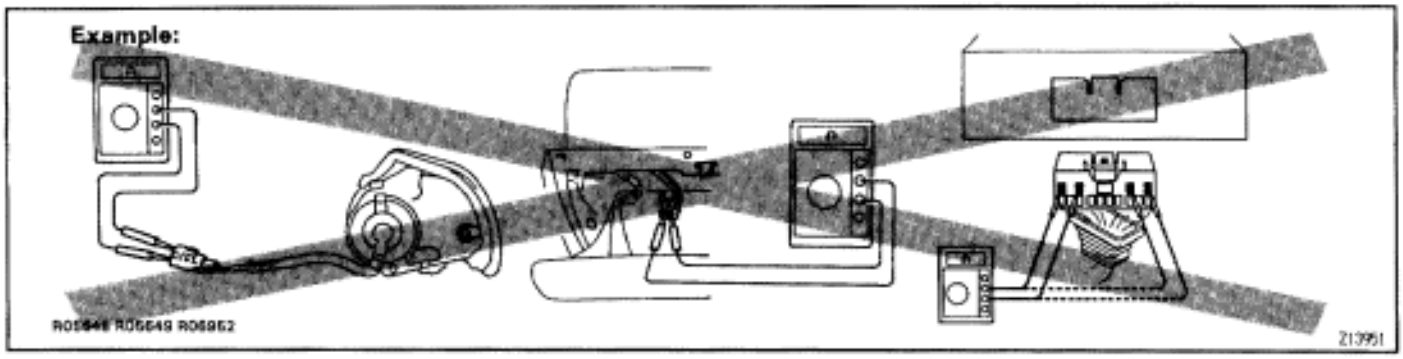

Center Airbag Sensor Assembly

1. Never reuse the center airbag sensor assembly involved in a collision when the SRS has deployed.
2. The connectors to the center airbag sensor assembly should be connected or disconnected with the sensor mounted on the floor. If the connectors are connected or disconnected while the center airbag sensor assembly is not mounted to the floor, it could cause undesired ignition of the supplemental restraint system.
3. Work must be started after 90 seconds from the time the ignition switch is turned to the LOCK position and the negative (–) terminal cable is disconnected from the battery, even if only loosening the set bolts of the center airbag sensor assembly.

Wire Harness and Connector

The SRS wire harness is integrated with the cowl wire harness assembly and floor wire harness assembly. The wires for the SRS wire harness are encased in a yellow corrugated tube. All the connectors for the system are also a standard yellow color. If the SRS wire harness becomes disconnected or the connector becomes broken due to an accident, etc., repair or replace it as shown on page RS–36.

FOR VEHICLES EQUIPPED WITH A CATALYTIC CONVERTER

CAUTION: If large amounts of unburned gasoline flow into the converter, it may overheat and create a fire hazard. To prevent this, observe the following precautions and explain them to your customer.

1. **Use only unleaded gasoline.**
2. **Avoid prolonged idling.**
   Avoid running the engine at idle speed for more than 20 minutes.
3. **Avoid spark jump test.**

(a) Perform spark jump test only when absolutely necessary. Perform this test as rapidly as possible.
(b) While testing, never race the engine.

4. **Avoid prolonged engine compression measurement.**
   Engine compression tests must be done as rapidly as possible.
5. **Do not run engine when fuel tank is nearly empty.**
   This may cause the engine to misfire and create an extra load on the converter.
6. **Avoid coasting with ignition turned off and prolonged braking.**
7. **Do not dispose of used catalyst along with parts contaminated with gasoline or oil.**

FOR VEHICLES EQUIPPED WITH TRACTION CONTROL (TRAC) SYSTEM

When using a rear wheel two–wheel drum tester such as a speedometer tester or chassis dynamometer, etc., or jacking up the rear wheels and driving the wheels, always push in the TRAC cut (”TRAC OFF”) switch and turn the TRAC system OFF.

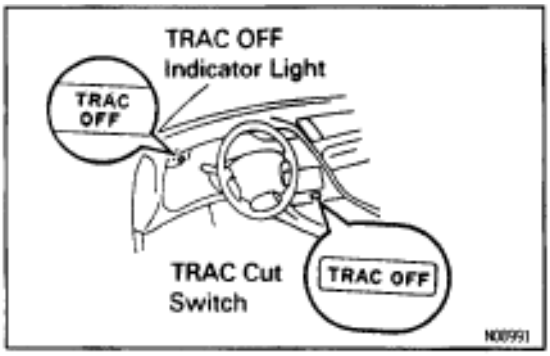

CONFIRM TRAC SYSTEM IS OFF

1. Press the TRAC cut (”TRAC OFF”) switch.
2. Check that the TRAC OFF indicator light comes on when the TRAC system is turned off by the TRAC cut switch.
   HINT: The TRAC indicator light should always operate right after the engine is restarted.

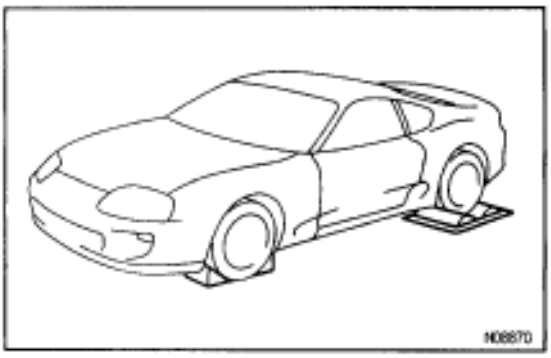

3. Begin measurements.

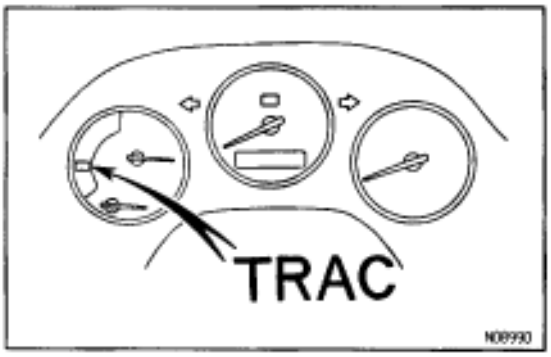

4. Press the TRAC cut switch again to change the TRAC to operative and check that the TRAC OFF indicator light goes off.
   HINT: The TRAC indicator light blinks when the TRAC system is operative.

INSPECTION AND ADJUSTMENT OF JOINT ANGLE DURING REMOVAL AND INSTALLATION OF PROPELLER SHAFT

When performing operations which involve the removal and installation of the propeller shaft, always check the joint angle. Make adjustments if necessary (See page PR–18).

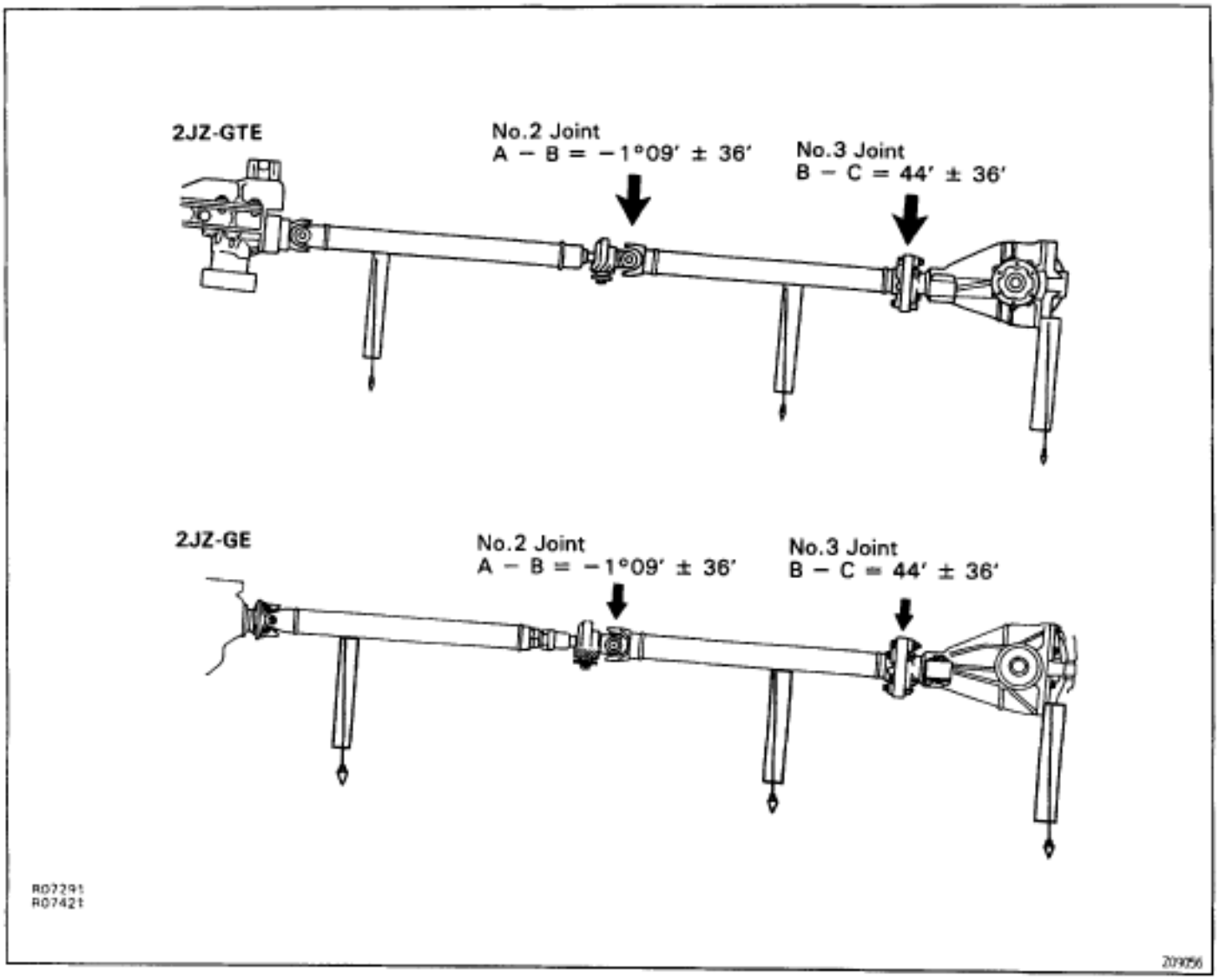

IF VEHICLE IS EQUIPPED WITH MOBILE COMMUNICATION SYSTEM

For vehicles with mobile communication systems such as two–way radios and cellular telephones, observe the following precautions.

(1) Install the antenna as far as possible away from the ECM, ECU and sensors of the vehicle's electronic system.

(2) Install the antenna feeder at least 20 cm (7.87 in.) away from the ECM, ECU and sensors of the vehicle's electronics systems. For details about ECM, ECU and sensors locations, refer to the section on the applicable component.

(3) Do not wind the antenna feeder together with the other wiring. As much as possible, also avoid running the antenna feeder parallel with other wire harnesses.

(4) Confirm that the antenna and feeder are correctly adjusted.

(5) Do not install powerful mobile communications system.

HOW TO TROUBLESHOOT ECU CONTROLLED SYSTEMS

A large number of ECU controlled systems are used in the TOYOTA SUPRA. In general, the ECU controlled system is considered to be a very intricate system requiring a high level of technical knowledge and expert skill to troubleshoot. However, the fact is that if you proceed to inspect the circuits one by one, troubleshooting of these systems is not complex. If you have adequate understanding of the system and a basic knowledge of electricity, accurate diagnosis and necessary repair can be performed to locate and fix the problem. This manual is designed through emphasis of the above standpoint to help service technicians perform accurate and effective troubleshooting, and is compiled for the following major ECU controlled systems:

Repair Manual	System		Page
Vol. 1	1.	2JZ–GE Engine	EG–381
		2JZ–GTE Engine	EG–487
Vol. 2	2.	A340E (2JZ–GE) Automatic Transmission	AT1–31
		A340E (2JZ–GTE) Automatic Transmission	AT1–31
	3.	Anti–Lock Brake	BR–51
	4.	Traction Control	BR–123
	5.	Supplemental Restraint System	RS–41
	6.	Theft Deterrent and Door Lock System	BE–142
	7.	Cruise Control	BE–163
	8.	Air Conditioning	AC–13

The troubleshooting procedure and how to make use of it are described on the following pages.

HOW TO PROCEED WITH TROUBLESHOOTING

Carry out troubleshooting in accordance with the procedure on the following page. Here, only the basic procedure is shown. Details are provided in each section, showing the most effective methods for each circuit. Confirm the troubleshooting procedures first for the relevant circuit before beginning troubleshooting of that circuit.

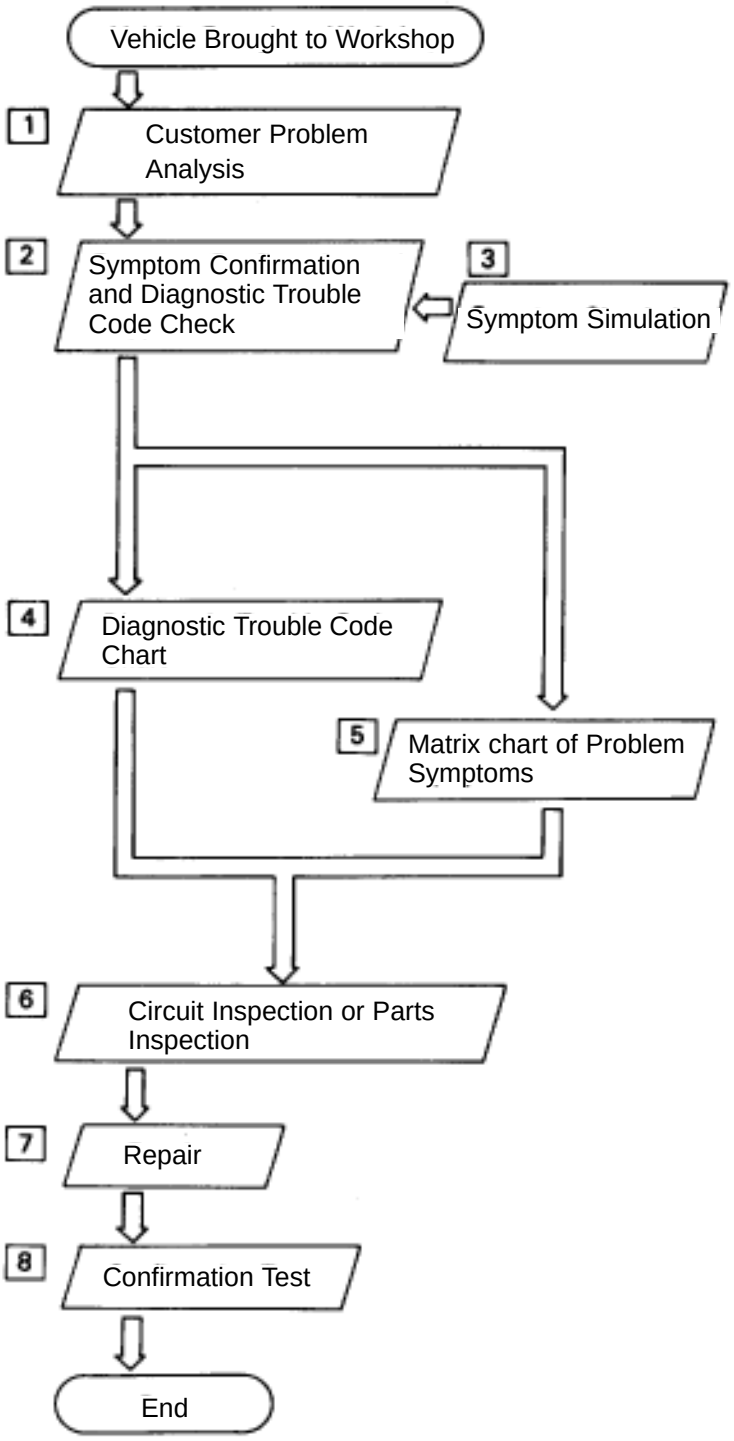

1

Ask the customer about the conditions and the environment when the problem occurred.

2 3

Confirm the symptoms and the problem conditions, and check the diagnostic trouble codes.
(When the problem symptoms do not appear during confirmation, use the symptom simulation method described later on.)

4 5 6

Check the results obtained in Step [2], then confirm the inspection procedure for the system or the part which should be checked using the diagnostic trouble code chart or the matrix chart of problem symptoms.

7

Check and repair the affected system or part in accordance with the instructions in Step [6].

8

After completing repairs, confirm that the problem has been eliminated.
(If the problem is not reproduced, perform the confirmation test under the same conditions and in the same environment as when it occurred for the first time.)

[1] CUSTOMER PROBLEM ANALYSIS

In troubleshooting, the problem symptoms must be confirmed accurately and all preconceptions must be cleared away in order to give an accurate judgment. To ascertain just what the problem symptoms are, it is extremely important to ask the customer about the problem and the conditions at the time it occurred.

Important Points in the Problem Analysis

The following 5 items are important points in the problem analysis. Past problems which are thought to be unrelated and the repair history, etc. may also help in some cases, so as much information as possible should be gathered and its relationship with the problem symptoms should be correctly ascertained for reference in troubleshooting. A customer problem analysis table is provided in the troubleshooting section for each system for your use.

Important Points in the Customer Problem Analysis

- What ..... Vehicle model, system name
- When ..... Date, time, occurrence frequency
- Where ..... Road conditions
- Under what conditions?..... Running conditions, driving conditions, weather conditions
- How did it happen? ..... Problem symptoms

(Sample) Engine control system check sheet.

CUSTOMER PROBLEM ANALYSIS CHECK SHEET

ENGINE CONTROL System Check Sheet

Inspector's Name

Customer's Name		Registration No.	
		Registration Year	/ /
		Frame No.	
Date Vehicle Brought In		Odometer Reading	km Miles

Date Problem Occurred		
Frequency Problem Occurs		□ Constant □ Sometimes (times per day/month) □ Once only □ Other ( )
Conditions When Problem Occurres	Weather	□ Fine □ Cloudy □ Rainy □ Snowy □ Various/Other ( )
	Outdoor Temperature	□ Hot □ Warm □ Cool □ Cold (Approx. °F(°C))
	Place	□ Highway □ Suburbs □ Inner City □ Hill (□ Up, □ Down) □ Rough road □ Other ( )
	Engine Temp.	□ Cold □ Warming up □ After warming up □ Any temp. □ Other ( )
	Engine Operation	□ Starting □ Just after starting □ Idling □ Racing without load □ Driving (□ Constant speed □ Acceleration □ Deceleration □ Other (
		□ Engine does not crank □ No initial combustion
		Engine cranks slowly
		t first idle □ Idling rpm is
		□ Other (

[2] SYMPTOM CONFIRMATION AND DIAGNOSTIC TROUBLE CODE CHECK

The diagnostic system in the TOYOTA SUPRA fulfills various functions. The first function is the Diagnostic Trouble Code Check in which a malfunction in the signal circuits to the ECU is stored in code in the ECU memory at the time of occurrence, to be output by the technician during troubleshooting. Another function is the Input Signal Check which checks if the signals from various switches are sent to the ECU correctly. The air conditioning system has an Actuator Check function whereby the ECU automatically operates the actuators of the damper and blowermotor, etc. to check the operation. By using these check functions, the problem areas can be narrowed down quickly and troubleshooting can be performed effectively. Diagnostic functions are incorporated in the following systems in the TOYOTA SUPRA.

System	Diagnostic Trouble Code Check	Input Signal Check (Sensor Check)	Other Diagnosis Function
Engine	O (with Test Mode)	O	
Automatic Transmission	O (with Test Mode)	O	
Anti–Lock Brake	O	O	
Traction Control (Option)	O	O	
Supplemental Restraint System	O		
Cruise Control	O	O	
Air Conditioning	O	O	Actuator Check

In diagnostic trouble code check, it is very important to determine whether the problem indicated by the diagnostic trouble code is still occurring or occurred in the past but returned to normal at present. In addition, it must be checked in the problem symptom check whether the malfunction indicated by the diagnostic trouble code is directly related to the problem symptom or not. For this reason, the diagnostic trouble codes should be checked before and after the symptom confirmation to determine the current conditions, as shown in the table below. If this is not done, it may, depending on the case, result in unnecessary troubleshooting for normally operating systems, thus making it more difficult to locate the problem, or in repairs not pertinent to the problem. Therefore, always follow the procedure in correct order and perform the diagnostic trouble code check.

DIAGNOSTIC TROUBLE CODE CHECK PROCEDURE

Diagnostic Trouble Code Check (Make a note of and then clear)	Confirmation of symptoms	Diagnostic Trouble Code Check	Problem Condition
Diagnostic Trouble Code Display ⇒	Problem symptoms exist	Same Diagnostic trouble code is displayed	Problem is still occurring in the diagnostic circuit
		Normal code is displayed	The problem is still occurring in a place other than in the diagnostic circuit. (The diagnostic trouble code displayed first is either for a past problem or it is a secondary problem.)
⇒	No problem symptoms exist		The problem occurred in the diagnostic circuit in the past.
Normal Code Display ⇒	Problem symptoms exist	Normal code is displayed	The problem is still occurring in a place other than in the diagnostic circuit.
⇒	No problem symptoms exist	Normal code is displayed	The problem occurred in a place other than in the diagnostic circuit in the past.

Taking into account the above points, a flow chart showing how to proceed with troubleshooting using the diagnostic trouble code check is shown below. This flow chart shows how to utilize the diagnostic trouble code check effectively, then by carefully checking the results, indicates how to proceed either to diagnostic trouble code troubleshooting or to troubleshooting of problem symptoms.

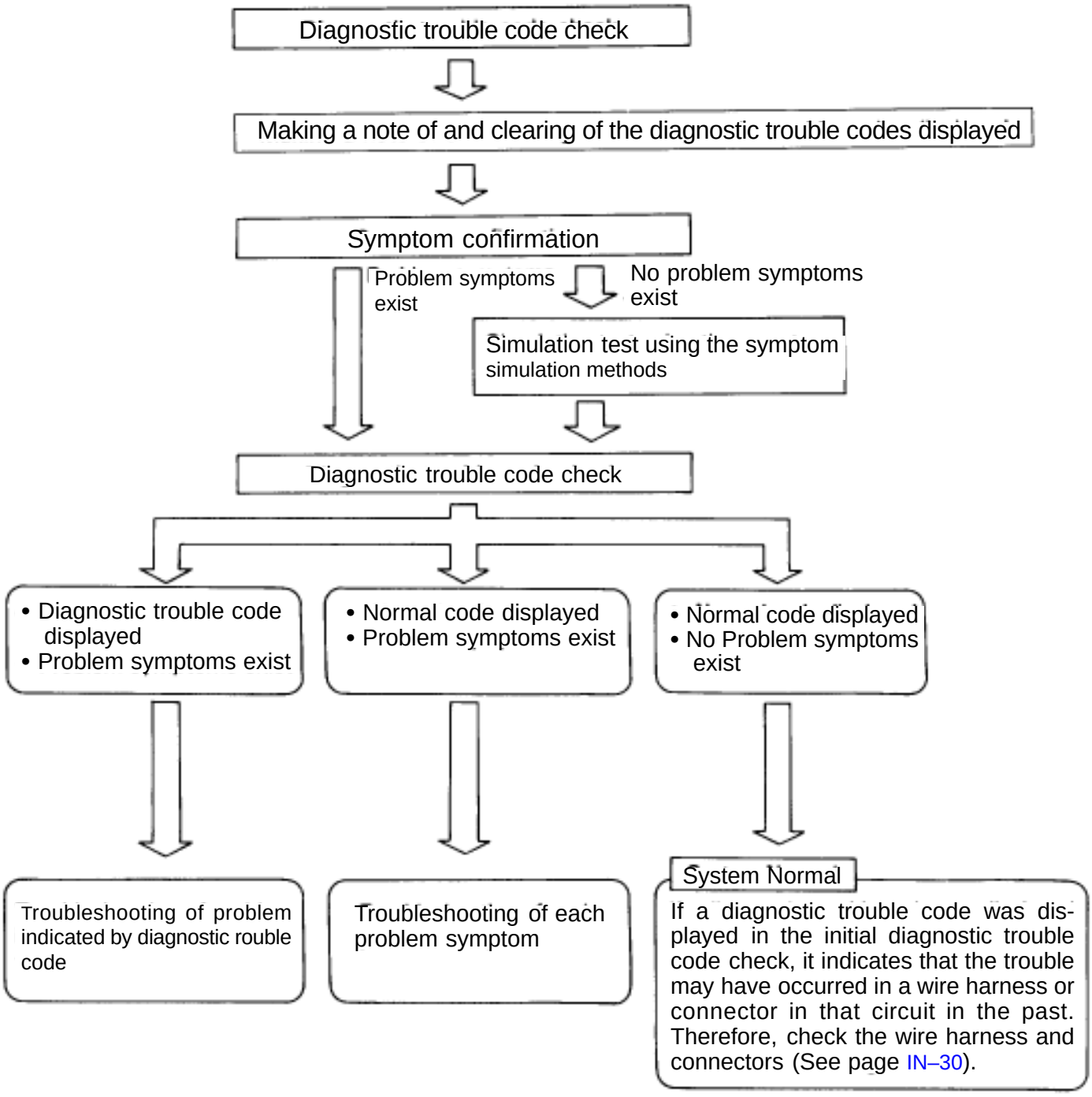

[3] SYMPTOM SIMULATION

The most difficult case in troubleshooting is when there are no problem symptoms occurring. In such cases, a thorough customer problem analysis must be carried out, then simulate the same or similar conditions and environment in which the problem occurred in the customer's vehicle. No matter how much experience a technician has, or how skilled he may be, if he proceeds to troubleshoot without confirming the problem symptoms he will tend to overlook something important in the repair operation and make a wrong guess somewhere, which will only lead to a standstill. For example, for a problem which only occurs when the engine is cold, or for a problem which occurs due to vibration caused by the road during driving, etc., the problem can never be determined so long as the symptoms are confirmed with the engine hot condition or the vehicle at a standstill. Since vibration, heat or water penetration (moisture) are likely causes for problems which are difficult to reproduce, the symptom simulation tests introduced here are effective measures in that the external causes are applied to the vehicle in a stopped condition.

Important Points in the Symptom Simulation Test

In the symptom simulation test, the problem symptoms should of course be confirmed, but the problem area or parts must also be found out. To do this, narrow down the possible problem circuits according to the symptoms before starting this test and connect a tester beforehand. After that, carry out the symptom simulation test, judging whether the circuit being tested is defective or normal and also confirming the problem symptoms at the same time. Refer to the matrix chart of problem symptoms for each system to narrow down the possible causes of the symptom.

1 VIBRATION METHOD: When vibration seems to be the major cause.

CONNECTORS

Slightly shake the connector vertically and horizontally.



WIRE HARNESS

Slightly shake the connector vertically and horizontally. The connector joint, fulcrum of the vibration, and body through portion are the major areas to be checked thoroughly.

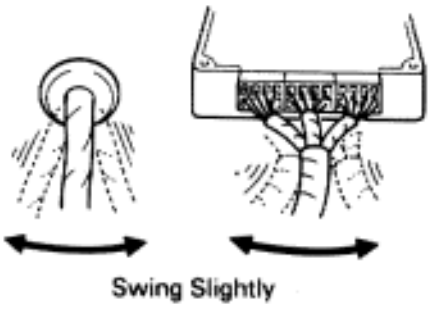

PARTS AND SENSORS

Apply slight vibration with a finger to the part of the sensor considered to be the problem cause and check if the malfunction occurs.

HINT: Applying strong vibration to relays may result in open relays.

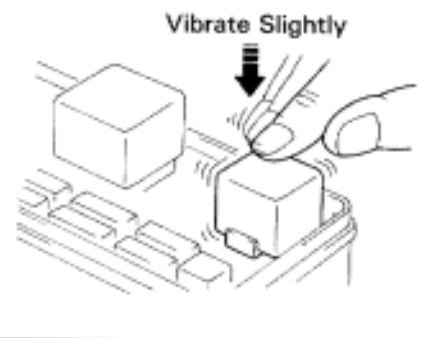

2 **HEAT METHOD: When the problem seems to occur when the suspect area is heated**

Heat the component that is the likely cause of the malfunction with a hair dryer or similar object. Check to see if the malfunction occurs.

NOTICE:

(1) Do not heat to more than 60°C (140°F). (Temperature limit that no damage is done to the component).

(2) Do not apply heat directly to parts in the ECU.

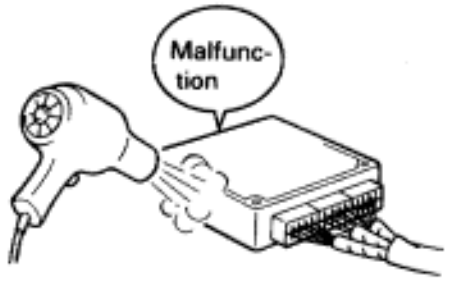

FI2334

3 **WATER SPRINKLING METHOD: When the malfunction seems to occur on a rainy day or in a high–humidity condition.**

Sprinkle water onto the vehicle and check to see if the malfunction occurs.

NOTICE:

(1) Never sprinkle water directly into the engine compartment, but indirectly change the temperature and humidity by applying water spray onto the radiator front surface.

(2) Never apply water directly onto the electronic components.

(Service hint)

If a vehicle is subject to water leakage, the leaked water may contaminate the ECU. When testing a vehicle with a water leakage problem, special caution must be used.



FI6649

4 **OTHER: When a malfunction seems to occur when electrical load is excessive.**

Turn on all electrical loads including th3e heater blower, head lights, rear window defogger, etc. and check to see if the malfunction occurs.

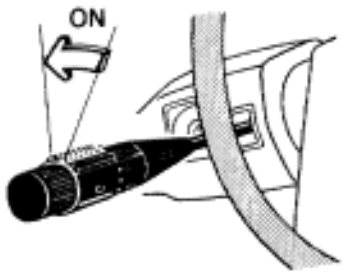

FI2336

[4] DIAGNOSTIC TROUBLE CODE CHART

The inspection procedure is shown in the table below. This table permits efficient and accurate troubleshooting using the diagnostic trouble codes displayed in the diagnostic trouble code check. Proceed with troubleshooting in accordance with the inspection procedure given in the diagnostic chart corresponding to the diagnostic trouble codes displayed. The engine diagnostic trouble code chart is shown below as an example.

- DTC No.
  Indicates the diagnostic trouble code.
- Circuit to be Checked
  Indicates the circuit or part which needs to be checked.
- Diagnostic Trouble Code Detecting Condition
  Indicates the diagnostic trouble code set parameter.

DIAGNOSTIC TROUBLE CODE CHART

HINT: Parameters listed in the chart may not be exactly the same as your reading due to type of the instruments or other factors.

DTC No.	Number of MIL Blinks	Circuit	Diagnostic Trouble Code Detecting Condition
–		Normal	No code is recorded
12		G, NE Signal (No.1)	No NE or G1 and G2 signal to ECM for 2 sec. or more after cranking
			Open in "G ⊖ " circuit
		NE Signal	No NE signal to ECM for 0.1 sec. or more
			NE signal does not pulse between G1 and

- Trouble Area
  Indicates the suspect area of the problem.
- Page or Instructions
  Indicates the page where the inspection procedure for each circuit is to be found, or gives instructions for checking and repairs.

If a malfunction code is displayed during the diagnostic trouble code check in test mode, check the circuit for that code listed in the table below (Proceed to the page given for that circuit).

Trouble Area	Malfunction Indicator Lamp*1		Memory*2	See page
	Normal Mode	Test Mode		
———	–	–	———	———
• Open or short in NE, G circuit • Distributor • Open or short in STA circuit • ECM	ON	N.A.	○	EG-409
in NE circuit	ON	N.A.		
	N.A.			

[5] MATRIX CHART OF PROBLEM SYMPTOMS

The suspect circuits or parts for each problem symptom are shown in the table below. Use this table to troubleshoot the problem when a "Normal" code is displayed in the diagnostic trouble code check but the problem is still occurring. Numbers in the table indicate the inspection order in which the circuits or parts should be checked.
HINT: When the problem is not detected by the diagnostic system even though the problem symptom is present, it is considered that the problem is occurring outside the detection range of the diagnostic system, or that the problem is occurring in a system other than the diagnostic system.

- **Page**
  Indicates the page where the flow chart for each circuit is located.
- **Problem Symptom**
- **Circuit or Part Name**
  Indicates the circuit or part which needs to be checked.

MATRIX CHART OF PROBLEM SYMPTOMS

When the malfunction code is not confirmed in the diagnostic trouble code check and the problem still can not be confirmed in the basic inspection, proceed to this matrix chart and troubleshoot according to the numbered order given below.

Suspect area / See page		Volume air flow meter circuit	Starter signal circuit	EGR system	Switch condition signal circuit	Park/neutral position switch circuit	ECM power source circuit	Back up power source circuit	Injector circuit	IAC valve circuit	Fuel pump control circuit	VSV circuit for fuel pressure control	A/C signal circuit (Compressor circuit)	Starter and Starter relay	Ignition signal circuit (Spark test)	Spark plug	Ignition coil	Distributor	Compression	A/T faulty	Theft deterrent ECU	Engine control module (ECM)
	See page	EG-438	EG-448	EG-453	EG-460	EG-463	EG-465	EG-470	EG-472	EG-475	EG-457	EG-481	AC-62	ST-3, 12	IG-4	IG-5	IG-7	IG-7	EG-9	AT-81	BE-123	IN-35
Does not start	Engine does not crank					2								1							3	
	No initial combustion						1		5		3				2	4						
	No complete combustion								6		1				5	4	2	3				
Difficult to	Engine cranks normally		1						8	2	3					6	4	5	7			
	Cold engine		1						4	2	3					7	5	6				
			1						5	2	4	3				8						
					1					2												
					1	5	4	6		2			3									
					3	4		8	6	1	5											

- **Circuit Inspection, Inspection Order**
  Indicates the circuit which needs to be checked for each problem symptom. Check in the order indicated by the numbers.

6 CIRCUIT INSPECTION

How to read and use each page is shown below.

- Diagnostic Trouble Code No. and Detection Item
- Circuit Description
  The major role and operation, etc. of the circuit and its component parts are explained.

DTC	24	Intake Air Temp. Sensor Circuit

CIRCUIT DESCRIPTION

The intake air temp. sensor is built into the volume air flow meter and senses the intake air temperature.
The structure of the sensor and connection to the ECM is the same as in the engine coolant temp. sensor shown on page EG-424.
If the ECM detects the diagnostic trouble code "24", it operates the fail safe function in which the intake air temperature is assumed to be 20°C (68°F).

DTC No.	Diagnostic Trouble Code Detecting Condition	Trouble Area
24	Open or short in intake air temp. sensor circuit for 0.5 sec. or more	• Open or short in intake air temp. sensor circuit • Intake air temp. sensor • ECM

- Indicates the diagnostic trouble code, diagnostic trouble code set parameter and suspect area of the problem.

WIRING DIAGRAM

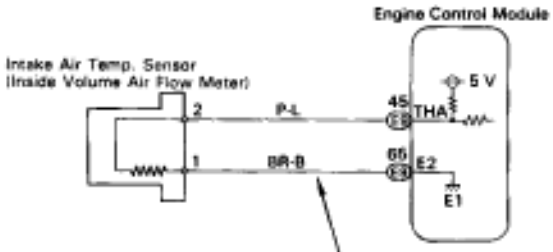

- Wiring Diagram
  This shows a wiring diagram of the circuit. Use this diagram together with ELECTRICAL WIRING DIAGRAM to thoroughly understand the circuit.

- Indicates the position of the ignition switch during the check.

LOCK Ignition Switch LOCK (OFF) ON Ignition Switch ON

START Ignition Switch START ACC Ignition Switch ACC

- Inspection Procedure

Use the inspection procedure to determine if the circuit is normal or abnormal, and, if it is abnormal, use it to determine whether the problem is located in the sensors, actuators, wire harness or ECU.

2JZ-GE ENGINE TROUBLESHOOTING – CIRCUIT INSPECTION EG-427

INSPECTION PROCEDURE

HINT: If diagnostic trouble codes "22" (engine coolant temperature sensor circuit), "24" (intake air temperature sensor circuit) and "41" (throttle position sensor circuit) are output simultaneously, E2 (sensor ground) may be open.

Check voltage between terminals THA and E2 of engine control module connector.

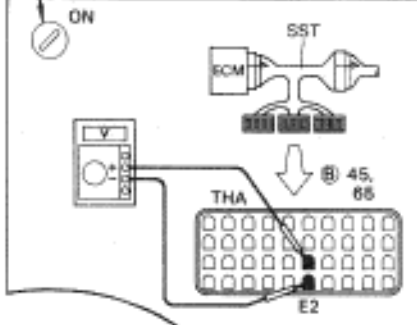

P (1) Connect SST (check harness "A").
(See page EG-404)
SST 09990-01000
(2) Turn ignition switch ON.

C Measure voltage between terminals THA and E2 of engine control module connector.

OK

Intake air temp. °C (°F)	Voltage
20 (68)	0.5 – 3.4 V
80 (140)	0.2

OK Check for intermitte
(See page EG-39

ensor.

- P Preparation
- C Check

- Indicates the place to check the voltage or resistance.
- Indicates the connector position to checked, from the front or back side.

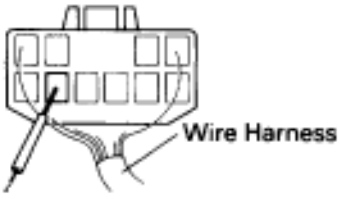

BE4076

Check from the connector back side. (with harness)



BE4077

Check from the connector front side (without harness) In this case, care must be taken not to bend the terminals.

- Indicates the condition of the connector of ECU during the check.

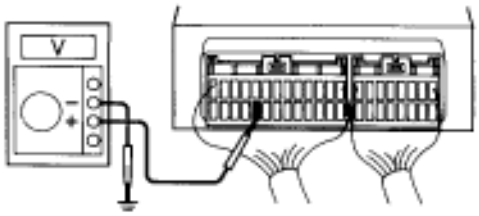

Connector being checked is connected.

BR5459

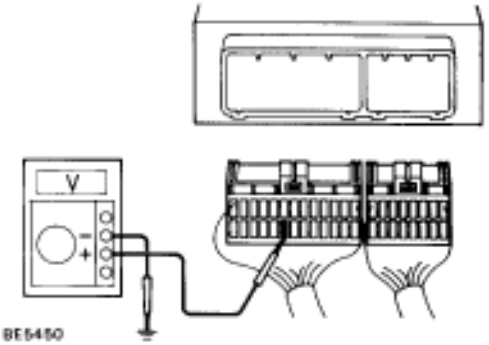

Connector being checked is disconnected.

BE5450

HOW TO USE THE DIAGNOSTIC CHART AND INSPECTION PROCEDURE

1. For troubleshooting, diagnostic trouble code charts or problem symptom charts are provided for each circuit with detailed inspection procedures on the following pages.
2. When all the component parts, wire harnesses and connectors of each circuit except the ECU are found to be normal in troubleshooting, then it is determined that the problem is in the ECU.
   Accordingly, if diagnosis is performed without the problem symptoms occurring, the instruction will be to check and replace the ECU, even if the problem is not in the ECU. So, always confirm that the problem symptoms are occurring, or proceed with inspection while using the symptom simulation method.
3. The instructions ”Check wire harness and connector” and ”Check and replace ECU” which appear in the inspection procedure, are common and applicable to all diagnostic trouble codes. Follow the procedure outlined below whenever these instructions appear.

Check Wire Harness and Connector

The problem in the wire harness or connector is an open circuit or a short circuit.

OPEN CIRCUIT:
This could be due to a disconnected wire harness, faulty contact in the connector, a connector terminal pulled out, etc.

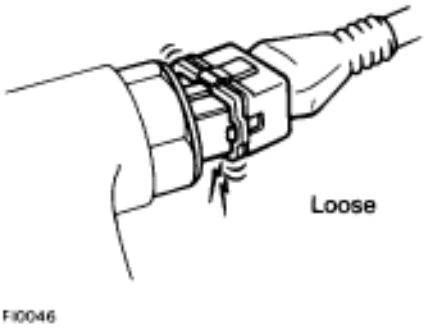

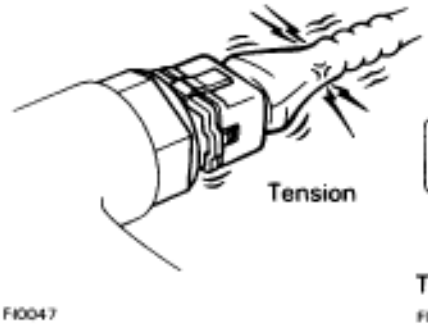

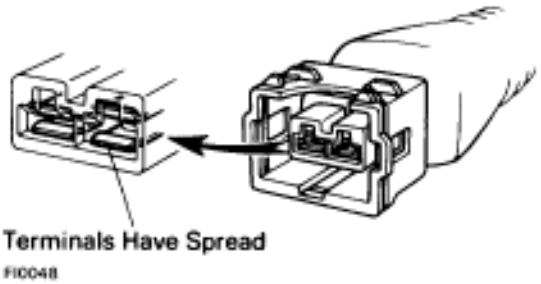

HINT:
1. It is rarely the case that a wire is broken in the middle of it. Most cases occur at the connector. In particular, carefully check the connectors of sensors and actuators.
2. Faulty contact could be due to rusting of the connector terminals, to foreign materials entering terminals or a drop in the contact pressure between the male and female terminals of the connector. Simply disconnecting and reconnecting the connectors once changes the condition of the connection and may result in a return to normal operation.
   Therefore, in troubleshooting, if no abnormality is found in the wire harness and connector check, but the problem disappears after the check, then the cause is considered to be in the wire harness or connectors.

SHORT CIRCUIT:
This could be due to a short circuit between the wire harness and the body ground or to a short inside the switch, etc.

HINT:
- When there is a short between the wire harness and body ground, check thoroughly whether the wire harness is caught in the body or is clamped properly.

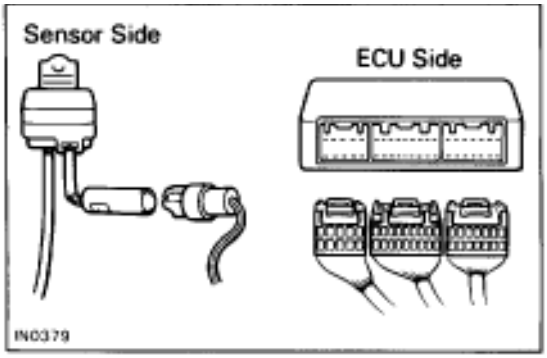

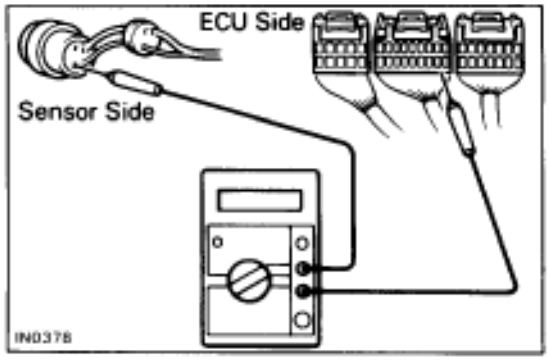

1. CONTINUITY CHECK (OPEN CIRCUIT CHECK)

(1) Disconnect the connectors at both ECU and sensor sides.

(2) Measure the resistance between the applicable terminals of the connectors.

Resistance: 1 Ω or less

HINT:

- Measure the resistance while lightly shaking the wire harness vertically and horizontally.
- When tester probes are inserted into a connector, insert the probes from the back. For waterproof connectors in which the probes cannot be inserted from the back, be careful not to bend the terminals when inserting the tester probes.

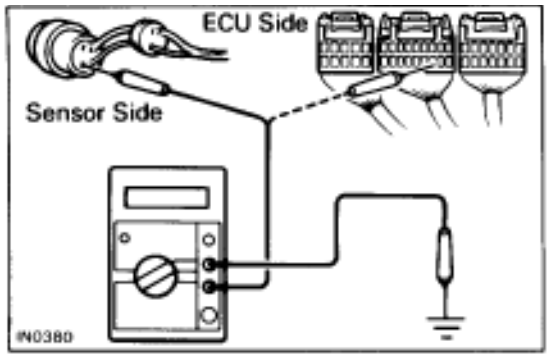

2. RESISTANCE CHECK (SHORT CIRCUIT CHECK)

(1) Disconnect the connectors at both ends.

(2) Measure the resistance between the applicable terminals of the connectors and body ground. Be sure to carry out this check on the connectors on both ends.

Resistance: 1 MΩ or higher

HINT: Measure the resistance while lightly shaking the wire harness vertically and horizontally.

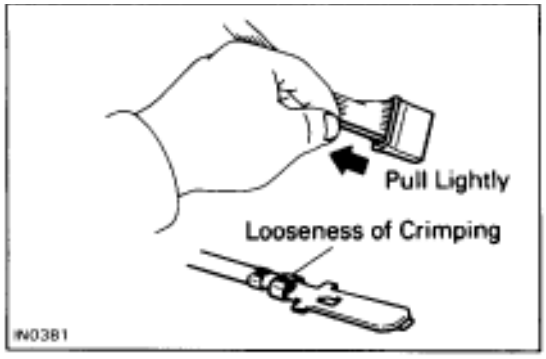

3. VISUAL CHECK AND CONTACT PRESSURE CHECK

(a) Disconnect the connectors at both ends.

(b) Check for rust or foreign material, etc. on the terminals of the connectors.

(c) Check crimped portions for looseness or damage and check if the terminals are secured in the lock position.

HINT: The terminals should not come out when pulled lightly.

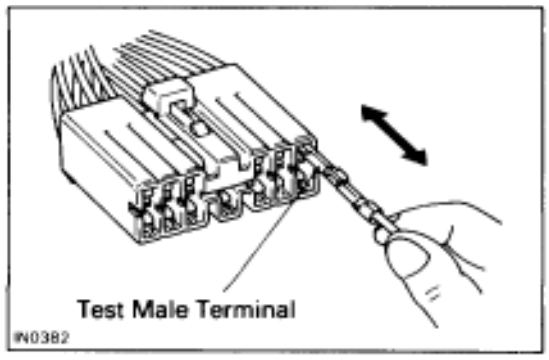

(d) Prepare a test male terminal and insert it in the female terminal, then pull it out.

HINT: When the test terminal is pulled out more easily than others, there may be poor contact in that section.

Actual examples of the inspection method for open circuit and short circuit are explained below.

1. OPEN CIRCUIT CHECK

For the open circuit in the wire harness in Fig. 1, perform "(a) Continuity Check" or "(b) Voltage Check" to locate the section.

Fig. 1.

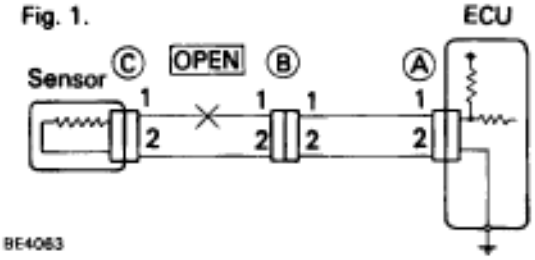

(a) Continuity Check

(1) Disconnect connectors (A) and (C) and measure the resistance between them.
In the case of Fig. 2,
Between terminal 1 of connector (A) and terminal 1 of connector (C) → No continuity (open)
Between terminal 2 of connector (A) and terminal 2 of connector (C) → Continuity
Therefore, it is found out that there is an open circuit between terminal 1 of connector (A) and terminal 1 of connector (C).

Fig. 2

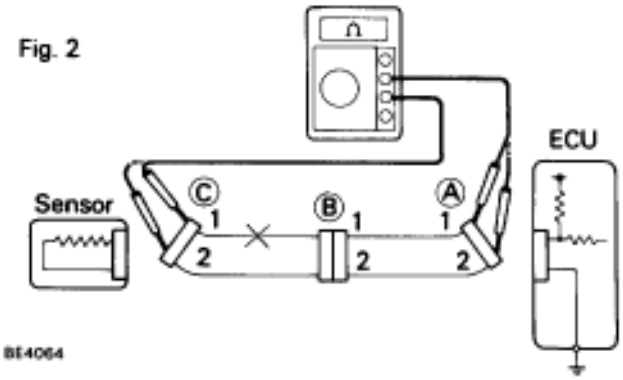

(2) Disconnect connector (B) and measure the resistance between connectors (A) and (B), (B) and (C).
In the case of Fig. 3,
Between terminal 1 of connector (A) and terminal 1 of connector (B) → Continuity
Between terminal 1 of connector (B) and terminal 1 of connector (C) → No Continuity (open)
Therefore, it is found out that there is an open circuit between terminal 1 of connector (B) and terminal 1 of connector (C).

Fig. 3

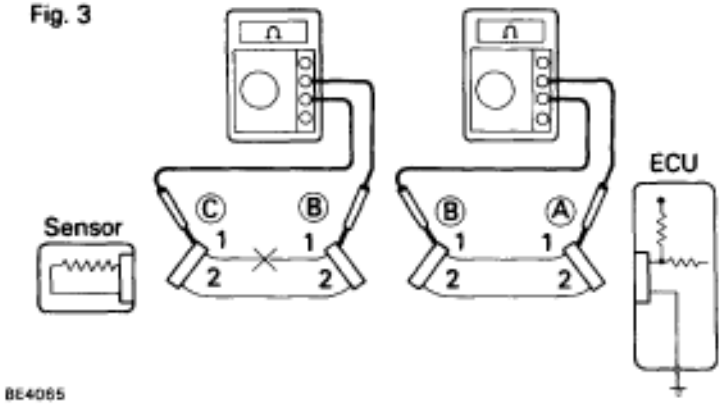

(b) Voltage Check

In a circuit in which voltage is applied (to the ECU connector terminal), an open circuit can be checked for by conducting a voltage check.

(1) As shown in Fig. 4, with each connector still connected, measure the voltage between body ground and terminal 1 of connector (A) at the ECU 5V output terminal, terminal 1 of connector (B), and terminal 1 of connector (C), in that order.

If the results are:

5 V: Between Terminal 1 of connector (A) and Body Ground

5 V: Between Terminal 1 of connector (B) and Body Ground

0 V: Between Terminal 1 of connector (C) and Body Ground

then it is found out that there is an open circuit in the wire harness between terminal 1 of (B) and terminal 1 of (C).

Fig. 4

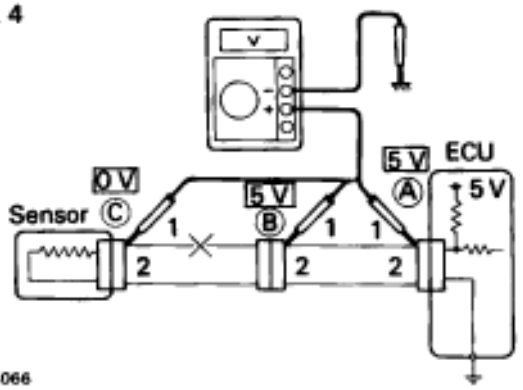

2. SHORT CIRCUIT CHECK

If the wire harness is ground shorted as in Fig. 5, locate the section by conducting a ”continuity check with ground”.

Fig. 5

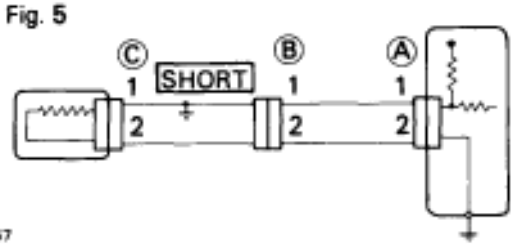

(a) Continuity Check with Ground

(1) Disconnect connectors (A) and (C) and measure the resistance between terminals 1 and 2 of connector (A) and body ground.
In the case of Fig. 6,
Between terminal 1 of connector (A) and body ground → Continuity
Between terminal 2 of connector (A) and body ground → No continuity (open)
Therefore, it is found out that there is a short circuit between terminal 1 of connector (A) and terminal 1 of connector (C).

Fig. 6

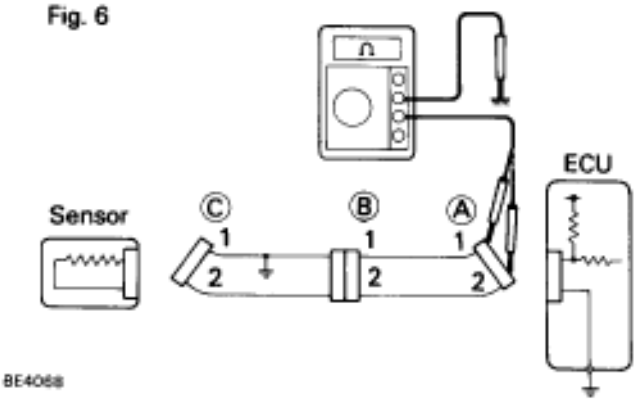

(2) Disconnect connector (B) and measure the resistance between terminal 1 of connector (A) and body ground, and terminal 1 of connector (B) and body ground.
Between terminal 1 of connector (A) and body ground → No continuity (open)
Between terminal 1 of connector (B) and body ground → Continuity
Therefore, it is found out that there is a short circuit between terminal 1 of connector (B) and terminal 1 of connector (C).

Fig. 7

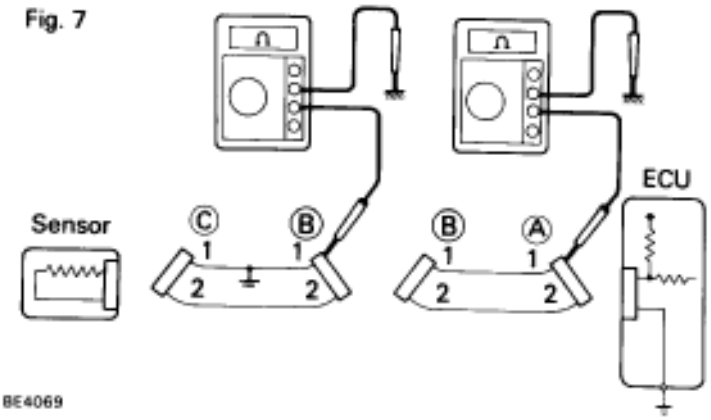

Check and Replace ECU

First check the ECU ground circuit. If it is faulty, repair it. If it is normal, the ECU could be faulty, so replace the ECU with a known good one and check if the symptoms appear.

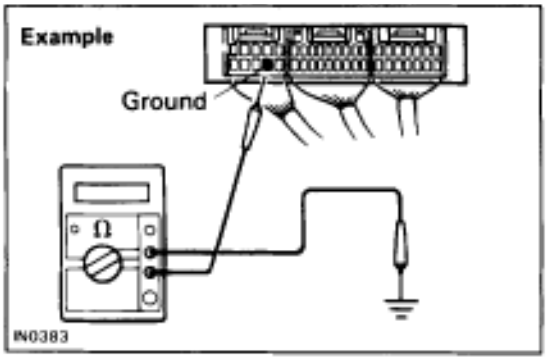

(1) Measure the resistance between the ECU ground terminal and the body body ground.
Resistance: 1 Ω or less

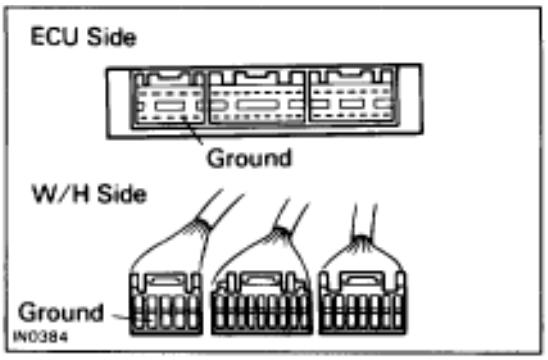

(2) Disconnect the ECU connector, check the ground terminals on the ECU side and wire harness side for bend and check the contact pressure.

VEHICLE LIFT AND SUPPORT LOCATIONS

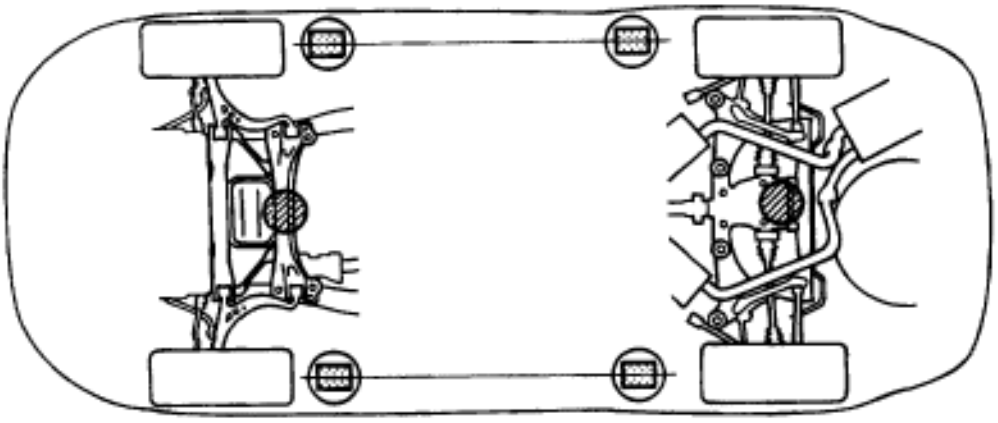

Front

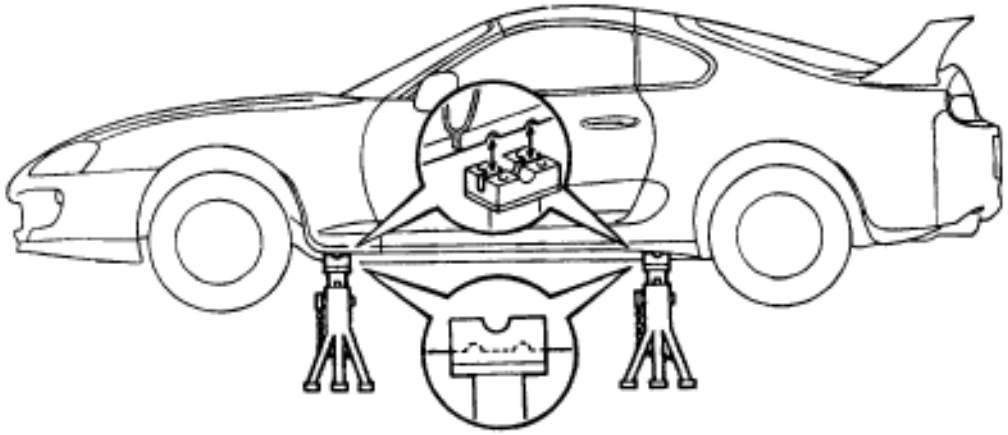

JACK POSITION ——————————

Front ..... Front crossmember
Rear ..... Rear axle beam

CAUTION: Before jacking-up the rear and front, make sure the car is not carrying any extra weight.

PANTOGRAPH JACK POSITION ——————————

SUPPORT POSITION

Safety stand and swing arm type lift .....

N08625
N08626

J09437

ABBREVIATIONS USED IN THIS MANUAL

ABS	Anti–Lock Brake System
ALR	Automatic Locking Retractor
APPROX.	Approximately
A/T, ATM	Automatic Transmission
ATF	Automatic Transmission Fluid
BTDC	Before Top Dead Center
CB	Circuit Breaker
CD	Compact Disc
CRS	Child Restraint System
DOHC	Double Over Head Cam
DP	Dash Pot
ECU	Electronic Control Unit
ELR	Emergency Locking Retractor
ESA	Electronic Spark Advance
ETR	Electronic Turning Radio
EX	Exhaust
FIPG	Formed in Place Gasket
FL	Fusible Link
Fr	Front
H–Fuse	High Current Fuse
IG	Ignition
IN	Intake
JB	Junction Block
LED	Light Emitting Diode
LH	Left–Hand
LSD	Limited Slip Differential
Max.	Maximum
MP	Multipurpose
M/T	Manual Transmission
O/D	Overdrive
O/S	Oversize
P & BV	Proportioning and By–pass Valve
PCV	Positive Crankcase Ventilation
PPS	Progressive Power Steering
PS	Power Steering

RH	Right–Hand
SRS	Supplemental Restraint System
SSM	Special Service Materials
SST	Special Service Tools
STD	Standard
SW	Switch
TEMP.	Temperature
TRAC	Traction Control System
U/S	Undersize
VSV	Vacuum Switching Valve
w/	With
w/o	Without

GLOSSARY OF SAE AND TOYOTA TERMS

This glossary lists all SAE–J1930 terms and abbreviations used in this manual in compliance with SAE recommendations, as well as their Toyota equivalents.

SAE ABBREVI–ATIONS	SAE TERMS	TOYOTA TERMS ( ) — ABBREVIATIONS
A/C	Air Conditioning	Air Conditioner
ACL	Air Cleaner	Air Cleaner
AIR	Secondary Air Injection	Air Injection (AI)
AP	Accelerator Pedal	–
B+	Battery Positive Voltage	+B, Battery Voltage
BARO	Barometric Pressure	–
CAC	Charge Air Cooler	Intercooler
CARB	Carburetor	Carburetor
CFI	Continuous Fuel Injection	–
CKP	Crankshaft Position	Crank Angle
CL	Closed Loop	Closed Loop
CMP	Camshaft Position	Cam Angle
CPP	Clutch Pedal Position	–
CTOX	Continuous Trap Oxidizer	–
CTP	Closed Throttle Position	Idle ON (IDL ON)
DFI	Direct Fuel Injection (Diesel)	Direct Injection (DI)
DI	Distributor Ignition	–
DLC1 DLC2 DLC3	Data Link Connector 1 Data Link Connector 2 Data Link Connector 3	1: Check Connector 2: Toyota Diagnosis Comunication Link (TDCL) 3: OBD II Diagnostic Connector
DTC	Diagnostic Trouble Code	Diagnostic Code
DTM	Diagnostic Test Mode	–
ECL	Engine Control Level	–
ECM	Engine Control Module	Engine ECU (Electronic Control Unit)
ECT	Engine Coolant Temperature	Coolant Temperature, Water Temperature (THW)
EEPROM	Electrically Erasable Programmable Read Only Memory	Electrically Erasable Programmable Read Only Memory (EEPROM), Erasable Programmable Read Only Memory (EPROM)
EFE	Early Fuel Evaporation	Cold Mixture Heater (CMH), Heat Control Valve (HCV)
EGR	Exhaust Gas Recirculation	Exhaust Gas Recirculation (EGR)
EI	Electronic Ignition	Toyota Distributorless Ignition (TDI)
EM	Engine Modification	Engine Modification (EM)
EPROM	Erasable Programmable Read Only Memory	Programmable Read Only Memory (PROM)
EVAP	Evaporative Emission	Evaporative Emission Control (EVAP)
FC	Fan Control	–
FEEPROM	Flash Electrically Erasable Programmable Read Only Memory	–
FEPROM	Flash Erasable Programmable Read Only Memory	–
FF	Flexible Fuel	–
FP	Fuel Pump	Fuel Pump
GEN	Generator	Alternator
GND	Ground	Ground (GND)
HO2S	Heated Oxygen Sensor	Heated Oxygen Sensor (HO2S)

IAC	Idle Air Control	Idle Speed Control (ISC)
IAT	Intake Air Temperature	Intake or Inlet Air Temperature
ICM	Ignition Control Module	–
IFI	Indirect Fuel Injection	Indirect Injection
IFS	Inertia Fuel–Shutoff	–
ISC	Idle Speed Control	–
KS	Knock Sensor	Knock Sensor
MAF	Mass Air Flow	Air Flow Meter
MAP	Manifold Absolute Pressure	Manifold Pressure Intake Vacuum
MC	Mixture Control	Electric Bleed Air Control Valve (EBCV) Mixture Control Valve (MCV) Electric Air Control Valve (EACV)
MDP	Manifold Differential Pressure	–
MFI	Multiport Fuel Injection	Electronic Fuel Injection (EFI)
MIL	Malfunction Indicator Lamp	Check Engine Light
MST	Manifold Surface Temperature	–
MVZ	Manifold Vacuum Zone	–
NVRAM	Non–Volatile Random Access Memory	–
O2S	Oxygen Sensor	Oxygen Sensor, O_2 Sensor (O_2S)
OBD	On–Board Diagnostic	On–Board Diagnostic (OBD)
OC	Oxidation Catalytic Converter	Oxidation Catalyst Converter (OC), CCo
OP	Open Loop	Open Loop
PAIR	Pulsed Secondary Air Injection	Air Suction (AS)
PCM	Powertrain Control Module	–
PNP	Park/Neutral Position	–
PROM	Programmable Read Only Memory	–
PSP	Power Steering Pressure	–
PTOX	Periodic Trap Oxidizer	Diesel Particulate Filter (DPF) Diesel Particulate Trap (DPT)
RAM	Random Access Memory	Random Access Memory (RAM)
RM	Relay Module	–
ROM	Read Only Memory	Read Only Memory (ROM)
RPM	Engine Speed	Engine Speed
SC	Supercharger	Supercharger
SCB	Supercharger Bypass	–
SFI	Sequential Multiport Fuel Injection	Electronic Fuel Injection (EFI), Sequential Injection
SPL	Smoke Puff Limiter	–
SRI	Service Reminder Indicator	–
SRT	System Readiness Test	–
ST	Scan Tool	–
TB	Throttle Body	Throttle Body
TBI	Throttle Body Fuel Injection	Single Point Injection Central Fuel Injection (Ci)
TC	Turbocharger	Turbocharger
TCC	Torque Converter Clutch	Torque Converter
TCM	Transmission Control Module	Transmission ECU (Electronic Control Unit)
TP	Throttle Position	Throttle Position
TR	Transmission Range	–

TVV	Thermal Vacuum Valve	Bimetallic Vacuum Switching Valve (BVSV) Thermostatic Vacuum Switching Valve (TVSV)
TWC	Three–Way Catalytic Converter	Three–Way Catalytic (TWC) CC_{RO}
TWC+OC	Three–Way + Oxidation Catalytic Converter	CC_R + CCo
VAF	Volume Air Flow	Air Flow Meter
VR	Voltage Regulator	Voltage Regulator
VSS	Vehicle Speed Sensor	Vehicle Speed Sensor (Read Switch Type)
WOT	Wide Open Throttle	Full Throttle
WU–OC	Warm Up Oxidation Catalytic Converter	–
WU–TWC	Warm Up Three–Way Catalytic Converter	Manifold Converter
3GR	Third Gear	–
4GR	Fourth Gear	–

STANDARD BOLT TORQUE SPECIFICATIONS

HOW TO DETERMINE BOLT STRENGTH

	Mark	Class		Mark	Class
Hexagon head bolt	 Bolt head No. 4– 5– 6– 7– 8– 9– 10– 11–	4T 5T 6T 7T 8T 9T 10T 11T	Stud bolt	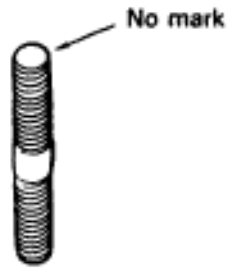 No mark	4T
	 No mark	4T		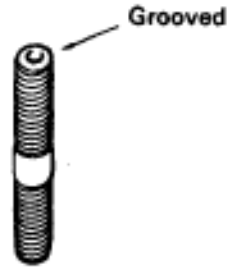 Grooved	6T
Hexagon flange bolt w/ washer hexagon bolt	 No mark	4T			
Hexagon head bolt	 2 protruding lines	5T			
Hexagon flange bolt w/ washer hexagon bolt	 2 protruding lines	6T	Welded bolt	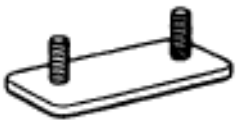	4T
Hexagon head bolt	 3 protruding lines	7T			
Hexagon head bolt	 4 protruding lines	8T			

SPECIFIED TORQUE FOR STANDARD BOLTS

Class	Diameter Mm	Pitch mm	Specified torque					
			Hexagon head bolt			Hexagon flange bolt		
			N·m	kgf·cm	ft·lbf	N·m	kgf·cm	ft·lbf
4T	6	1	5	55	48 in.·lbf	6	60	52 in.·lbf
	8	1.25	12.5	130	9	14	145	10
	10	1.25	26	260	19	29	290	21
	12	1.25	47	480	35	53	540	39
	14	1.5	74	760	55	84	850	61
	16	1.5	115	1,150	83	–	–	–
5T	6	1	6.5	65	56 in.·lbf	7.5	75	65 in.·lbf
	8	1.25	15.5	160	12	17.5	175	13
	10	1.25	32	330	24	36	360	26
	12	1.25	59	600	43	65	670	48
	14	1.5	91	930	67	100	1,050	76
	16	1.5	140	1,400	101	–	–	–
6T	6	1	8	80	69 in.·lbf	9	90	78 in.·lbf
	8	1.25	19	195	14	21	210	15
	10	1.25	39	400	29	44	440	32
	12	1.25	71	730	53	80	810	59
	14	1.5	110	1,100	80	125	1,250	90
	16	1.5	170	1,750	127	–	–	–
7T	6	1	10.5	110	8	12	120	9
	8	1.25	25	260	19	28	290	21
	10	1.25	52	530	38	58	590	43
	12	1.25	95	970	70	105	1,050	76
	14	1.5	145	1,500	108	165	1,700	123
	16	1.5	230	2,300	166	–	–	–
8T	8	1.25	29	300	22	33	330	24
	10	1.25	61	620	45	68	690	50
	12	1.25	110	1,100	80	120	1,250	90
9T	8	1.25	34	340	25	37	380	27
	10	1.25	70	710	51	78	790	57
	12	1.25	125	1,300	94	140	1,450	105
10T	8	1.25	38	390	28	42	430	31
	10	1.25	78	800	58	88	890	64
	12	1.25	140	1,450	105	155	1,600	116
11T	8	1.25	42	430	31	47	480	35
	10	1.25	87	890	64	97	990	72
	12	1.25	155	1,600	116	175	1,800	130

MAINTENANCE

GENERAL NOTES:

- There are two separate maintenance schedules, namely A and B, which apply to different driving conditions. Find out how the vehicle is driven, select the appropriate schedule and service the vehicle accordingly.
- Every service item in the periodic maintenance list must be performed.
- Next to the columns of periods in the schedule, reference pages have been added for easy access to service data and procedures necessary for each operation.
- The service interval for scheduled maintenance is determined by the odometer reading or time interval, whichever comes first, shown in the schedule.
- Maintenance services after the last period should be performed at the same interval as before unless otherwise noted.
- Skipping even one item in the list can cause the engine to run poorly and increase exhaust emissions.

MAINTENANCE SCHEDULE

SCHEDULE A

CONDITIONS:

- Towing a trailer, using a camper or car top carrier.
- Repeated short trips of less than 8 km (5 miles) with outside temperature remaining below freezing.
- Extensive idling and/or low speed driving for long distances, such as police, taxi or door–to –door delivery use.
- Operating on dusty, rough, muddy or salt spread roads.

Maintenance operation: A = Check and adjust if necessary.
R = Replace, change or lubricate.
I = Inspect and correct or replace if necessary.

System	Service interval (Use odometer reading or months, whichever comes first) / Maintenance items		Maintenance services beyond 96,000 km (60,000 miles) should continue to be performed at the same intervals shown for each maintenance schedule.																	Months	See page (item No.)
	x 1,000 km		1.6	8	13	18	24	30	36	42	48	54	60	66	72	78	84	90	96		
	x 1,000 miles		1	3.75	75	11.25	15	18.75	22.5	26.25	30	33.75	37.5	41.25	45	48.75	52.5	56.25	60		
ENGINE	Timing belt (1)																		R	—	MA–6 (Item 1)
	Valve clearance																		A	A: Every 72 months	MA–9 (Item 12)
	Drive belt		I: First period 96,000 km (60,000 miles) or 72 months. I: After that every 12,000 km (7,500 miles) or 12 months.																		MA–6 (Item 2)
	Engine oil	2JZ-GE engine	R	R	R	R	R	R	R	R	R	R	R	R	R	R	R	R	R	R: Every 6 months	MA–7 (Item 6)
		2JZ-GTE engine	R: Every 2,500 miles (4,000 km) or 3 months.																		
	Engine oil filter	2JZ-GE engine	R	R	R	R	R	R	R	R	R	R	R	R	R	R	R	R	R	R: Every 6 months	MA–7 (Item 6)
		2JZ-GTE engine	R: Every 5,000 miles (8,000 km) or 6 months.																		
	Engine coolant		R: First period 72,000 km (45,000 miles) or 36 months. R: After that every 48,000 km (30,000 miles) or 24 months																		MA–8 (Item 7)
	Exhaust pipes and mountings						I				I				I				I	I: Every 24 months	MA–9 (Item 11)
FUEL	Air filter (2)*			I	I	I	I	I	I	I	R	I	I	I	I	I	I	I	R	I: Every 6 months R: Every 36 months	MA–6 (Item 3, 4)
	Fuel lines and connections (3)										I								I	I: Every 36 months	MA–9 (Item 10)
	Fuel tank cap gasket																		R	R: Every 72 months	MA–9 (Item 9)
IGNITION	Spark plugs (Platinum tipped type)																		R	R: Every 72 months	MA–7 (Item 5)
EVAP	Charcoal canister	New York and California only																	I	I: Every 72 months	MA–8 (Item 8)
BRAKES	Brake linings and drums (4)				I		I		I		I		I		I		I		I	I: Every 12 months	MA–11 (Item 15)
	Brake pads and discs (Front and rear)				I		I		I		I		I		I		I		I	I: Every 12 months	MA–11 (Item 14)
	Brake line pipes and hoses						I				I				I				I	I: Every 24 months	MA–10 (Item 13)
CHASSIS	Steering linkage				I		I		I		I		I		I		I		I	I: Every 12 months	MA–12 (Item 16)
	SRS airbag		I: First period 10 years. I: After that every 2 years.																		MA–12 (Item 17)
	Ball joints and dust covers				I		I		I		I		I		I		I		I	I: Every 12 months	MA–13 (Item 19)
	Automatic transmission, manual transmission and differential oil						R				R				R				R	R: Every 24 months	MA–14, 15 (Item 20, 21)
	Steering gear housing oil (5)						I				I				I				I	I: Every 24 months	MA–13 (Item 18)
	Bolts and nuts on chassis and body (6)				I		I		I		I		I		I		I		I	I: Every 12 months	MA–16 (Item 22)

* mark indicates maintenance which is part of the warranty conditions for the Emission Control Systems. The warranty period is in accordance with the owner's guide or the warranty booklet.

2JZ–GE:

*: For vehiles sold in California, Massachusetts, New Jersey, Connecticut and New York only.

2JZ–GTE:

*: For vehiles sold in California and Massachusetts only.

(1) Applicable to vehicles operated under conditions of extensive idling and/or low speed driving for long distances such as police, taxi or door–to–door delivery use.
(2) Applicable when operating mainly on dusty roads.
(3) Includes inspection of fuel tank band and vapor vent system.
(4) Also applicable to drum lining for parking brake. For other usage conditions, refer to SCHEDULE B.
(5) Check for oil leaks from steering gear housing.
(6) Applicable only when operating mainly on rough, muddy roads. The applicable parts are listed below. For other usage conditions, refer to SCHEDULE B.
    - Front and rear suspension member to cross body.
    - Bolts for sheat installation.

SCHEDULE B

CONDITIONS:

Conditions others than those listed for SCHEDULE A.

Maintenance operation: A = Check and adjust if necessary.
R = Replace, change or lubricate.
I = Inspect and correct or replace if necessary.

System	Service interval (Use odometer reading or months, whichever comes first) / Maintenance items		Maintenance services beyond 96,000 km (60,000 miles) should continue to be performed at the same intervals shown for each maintenance schedule.										See page (item No.)
		× 1,000 km	1.6	12	24	36	48	60	72	84	96	Months	
		× 1,000 miles	1	7.5	15	22.5	30	37.5	45	52.5	60		
ENGINE	Valve clearance										A	A: Every 72 months	MA–9 (Item 12)
	Drive belt		I: First period 96,000 km (60,000 miles) or 72 months. I: After that every 12,000 km (7,500 miles) or 12 months.										MA–6 (Item 2)
	Engine oil	2JZ-GE engine	R	R	R	R	R	R	R	R	R	R: Every 12 months	MA–7 (Item 6)
		2JZ-GTE engine	R: Every 5,000 miles (8,000 km) or 6 months.										MA–8 (Item 6)
	Engine oil filter	2JZ-GE engine	R	R	R	R	R	R	R	R	R	R: Every 12 months	MA–7 (Item 6)
		2JZ-GTE engine	R: Every 10,000 miles (16,000 km) or 12 months.										MA–8 (Item 13)
	Engine coolant		R: First period 72,000 km (45,000 miles) or 36 months. R: After that every 48,000 km (30,000 miles) or 24 months.										MA–8 (Item 7)
	Exhaust pipes and mountings						I				I	I: Every 36 months	MA–9 (Item 11)
FUEL	Air filter★						R				R	R: Every 36 months	MA–6 (Item 4)
	Fuel lines and connections (1)						I				I	I: Every 36 months	MA–9 (Item 10)
	Fuel tank cap gasket										R	R: Every 72 months	MA–9 (Item 9)
IGNITION	Spark plugs (Platinum tipped type)										R	R: Every 72 months	MA–7 (Item 5)
EVAP	Charcoal canister	New York and California only									I	I: Every 72 months	MA–8 (Item 8)
BRAKES	Brake linings and drums (2)				I		I		I		I	I: Every 24 months	MA–11 (Item 15)
	Brake pads and discs (Front and rear)				I		I		I		I	I: Every 24 months	MA–11 (Item 14)
	Brake line pipes and hoses				I		I		I		I	I: Every 24 months	MA–10 (Item 13)
CHASSIS	Steering linkage				I		I		I		I	I: Every 24 months	MA–12 (Item 16)
	SRS airbag		I: First period 10 years. I: After that every 2 years.										MA–12 (Item 17)
	Ball joints and dust covers				I		I		I		I	I: Every 24 months	MA–13 (Item 19)
	Automatic transmission, manual transmission differential oil (3)				I		I		I		I	I: Every 24 months	MA–14 (Item 20)
	Differential (LSD)				I		R		I		R	I: Every 24 months R: Every 48 months	MA–15 (Item 20)
	Steering gear housing oil (4)				I		I		I		I	I: Every 24 months	MA–13 (Item 18)
	Bolts and nuts on chassis and body (5)				I		I		I		I	I: Every 24 months	MA–16 (Item 22)

★ mark indicates maintenance which is part of the warranty conditions for the Emission Control Systems. The warranty period is in accordance with the owner's guide or the warranty booklet.

2JZ–GE:

★: For vehiles sold in California, Massachusetts, New Jersey, Connecticut and New York only.

2JZ–GTE:

★: For vehiles sold in California and Massachusetts only.

(1) Includes inspection of fuel tank band and vaper vent system.
(2) Also applicable to drum lining for parking brake.
(3) Check for leakage.
(4) Check for oil leaks from steering gear housing.
(5) The applicable parts are listed below.

- Front and rear suspension member to cross body.
- Bolts for sheat installation.

PREPARATION

RECOMMENDED TOOLS

	09200–00010 Engine Adjust Kit.	

EQUIPMENT

Dial indicator	Brake disc
Micrometer	Brake disc
Mirror	Brake hose
Thermometer	
Torque wrench	
Vernier calipers	Parking brake drum

COOLANT

Item		Capacity	Classification
Engine coolant (w/ Heater)	2JZ–GE M/T	7.3 liters (7.7 US qts, 6.4 lmp. qts)	Ethylene–glycol base
	A/T	8.3 liters (8.8 US qts, 7.3 lmp. qts)	
	2JZ–GTE M/T	9.5 liters (10.0 US qts, 8.4 lmp. qts)	
	A/T	9.4 liters (9.9 US qts, 8.3 lmp. qts)	

LUBRICANT

Item	Capacity	Classification
Engine oil (Drain and refill) (2JZ–GE) w/ Oil filter change w/o Oil filter change	 5.3 liters (5.6 US qts, 4.7 lmp. qts) 4.9 liters (5.2 US qts, 4.3 lmp. qts)	API grade SH, Energy–Conserving II multigrade engine oil or ILSAC multi-grade engine oil and recommended viscosity oil, with SAE 5W–30 being preferred engine oil
Engine oil (Drain and refill) (2JZ–GTE) w/ Oil filter change w/o Oil filter change	 5.0 liters (5.3 US qts, 4.4 lmp. qts) 4.7 liters (5.0 US qts, 4.1 lmp. qts)	API grade SH, Energy–Conserving II mutigrade engine oil or ILSAC multi-grade engine oil and recommended viscosity oil
Manual transmission oil 2JZ–GE 2JZ–GTE	2.6 liters (2.7 US qts, 2.3 lmp. qts) 1.8 liters (1.9 US qts, 1.6 lmp. qts)	API GL–5 SAE 75W–90 Castle gear oil V160
Automatic transmission fluid (Drain and refill) 2JZ–GE 2JZ–GTE	1.6 liters (1.7 US qts, 1.4 lmp. qts) 1.9 liters (2.0 US qts, 1.7 lmp. qts)	ATF DEXRON® II ATF TYPE T–II
Differential oil	1.35 liters (1.43 US qts, 1.19 lmp. qts)	API GL–5 Above–18° C (0° F) SAE 90 Below–18° C (0° F) SAE 80W–90 or 80W

MAINTENANCE OPERATIONS

ENGINE

Cold Engine Operations

1. REPLACE TIMING BELT
(See timing belt removal and installation in Engine Mechanical)

2. INSPECT DRIVE BELT
(See step 3 in on–vehicle insection in Charging System)

3. INSPECT AIR FILTER

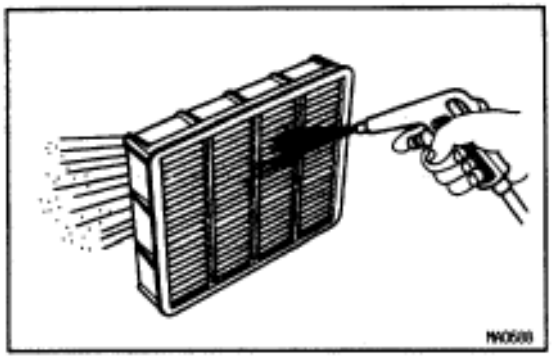

(a) Remove the air filter.
(b) Visually check that the air filter is not excessively damaged or oily.
If necessary, replace the air filter.
(c) Clean the air filter with compressed air.
First blow from the inside thoroughly, then blow off the outside of the air filter.
(d) Reinstall the air filter.

4. REPLACE AIR FILTER
Replace the air filter with a new one.

5. REPLACE SPARK PLUGS
(a) 2JZ–GE:
Remove the throttle body.
(See throttle body removal in SFI System)
(b) Remove the No.3 timing belt cover.
(c) 2JZ–GE:
Remove the cylinder head rear cover.

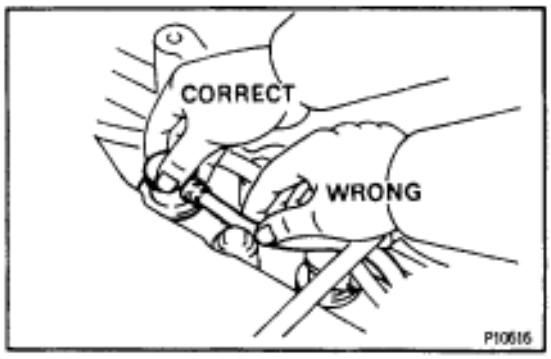

(d) Disconnect the high–tension cords at the rubber boot. Do not pull on the high–tension cords.
NOTICE: Pulling on or bending the cords may damage the conductor inside.
(e) Using a 16 mm plug wrench, remove the 6 spark plugs.

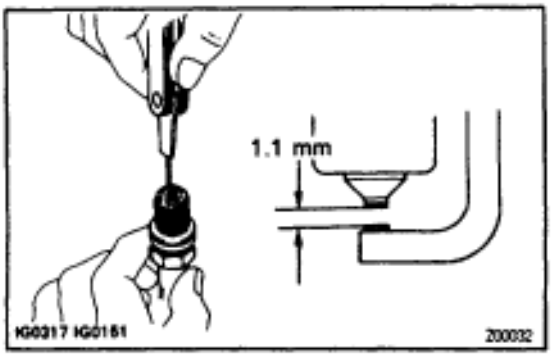

(f) Check the electrode gap of new spark plugs.
Correct electrode gap:
1.1 mm (0.043 in.)

Recommended spark plug:

2JZ–GE

ND

PK16R11

HGK

BKR5EP11

2JZ–GTE

ND

PK20R11

NGK

BKR6EP11

NOTICE: If adjusting the gap of a new spark plug, bend only the base of the ground electrode. Do not touch the tip.

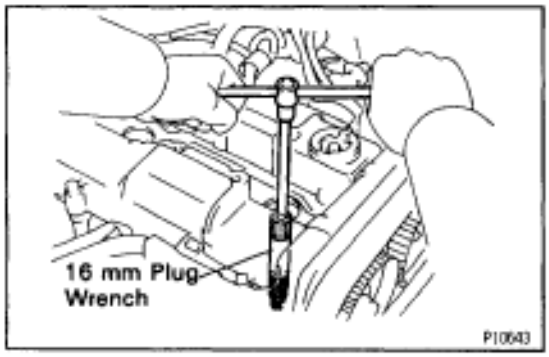

(g) Using a 16 mm plug wrench, reinstall the 6 spark plugs.
Torque: 18 N·m (180 kgf·cm, 13 ft·lbf)

(h) Reconnect the high–tension cords.

(i) 2JZ–GE:
Reinstall the cylinder head rear cover.

(j) Reinstall the No.3 timing belt cover.

(k) 2JZ–GE:
Reinstall the throttle body.
(See throttle body installation in SFI System)

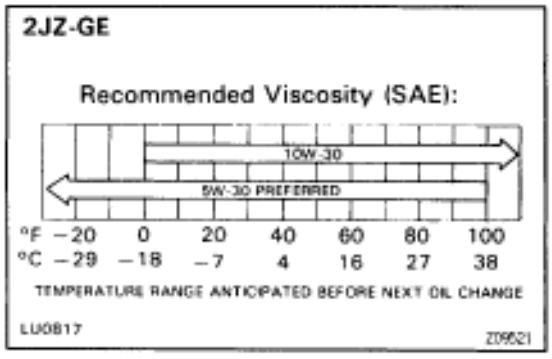

6. REPLACE ENGINE OIL AND OIL FILTER
(See oil and filter replacement in Lubrication System)

2JZ–GE:

Oil grade:

API grade SH Energy–Conserving II multigrade engine oil or ILSAC multigrade engine oil. Recommended viscosity is as follows with SAE 5W–30 being the preferred engine oil for your vehicle.

Drain and refill capacity:

w/ Oil filter change

5.3 liters (5.6 US qts, 4.7 lmp. qts)

w/o Oil filter change

4.9 liters (5.2 US qts, 4.3 lmp. qts)

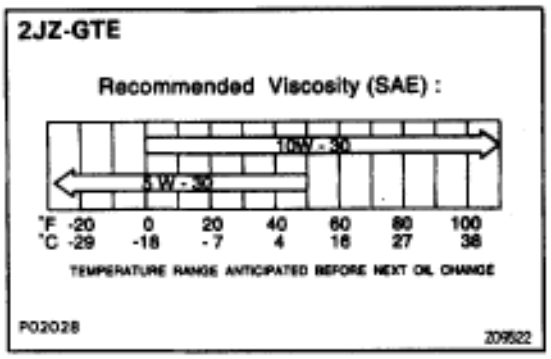

2JZ–GTE:

Oil grade:

API grade SH Energy–Conserving II multigrade engine oil or ILSAC multigrade engine oil. Recommended viscosity is given in the following chart.

Drain and refill capacity:

w/ Oil filter change

5.0 liters (5.3 US qts, 4.4 lmp. qts)

w/o Oil filter change

4.7 liters (5.0 US qts, 4.1 lmp. qts)

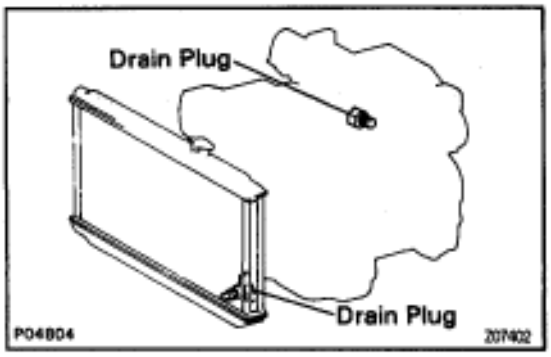

7. REPLACE ENGINE COOLANT

(See coolant replacement in Cooling System)

Capacity (w/ Heater):

2JZ–GE

M/T

7.3 liters (7.7 US qts, 6.4 lmp. qts)

A/T

8.3 liters (8.8 US qts, 7.3 lmp. qts)

2JZ–GTE

M/T

9.5 liters (10.0 US qts, 8.4 lmp. qts)

A/T

9.4 liters (9.9 US qts, 8.3 lmp. qts)

HINT:

- Use a good brand of ethylene–glycol base coolant and mix it according to the manufacturer's directions.
- Using coolant which includes more than 50% ethylene–glycol (but not more than 70%) is recommended.

NOTICE:

- **Do not use a alcohol type coolant.**
- **The coolant should be mixed with demineralized water or distilled water.**

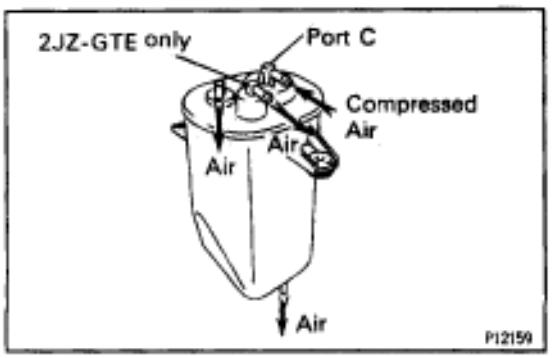

8. INSPECT CHARCOAL CANISTER

(a) Remove the charcoal canister.

(b) Visually inspect the canister case.

(c) Check for crogged each port and stuck check valve.

- Using low compressed air (4.71 kPa (48 gf/cm^2, 0.68 psi)), blow into port C and check that air flows without resistance from the other ports.

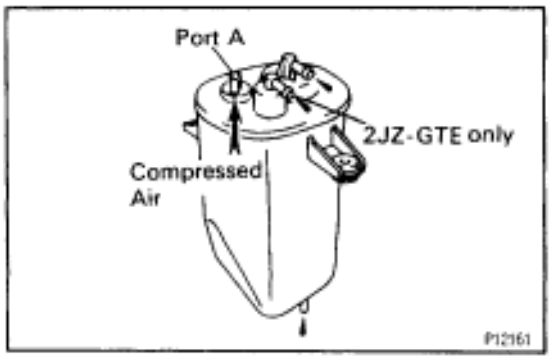

- Blow low compressed air (4.71 kPa (48 gf/cm^2, 0.68 psi)) into port A and check that air does not flow from the other ports.

If operation is not as specified, replace the charcoal canister.

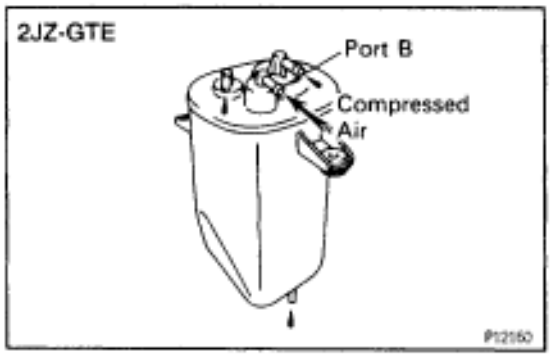

- 2JZ–GTE:
  Blow low compressed air (4.71 kPa (48 gf/cm^2, 0.68 psi)) into port B and check that air does not flow from the other ports.

If operation is not as specified, replace the charcoal canister.

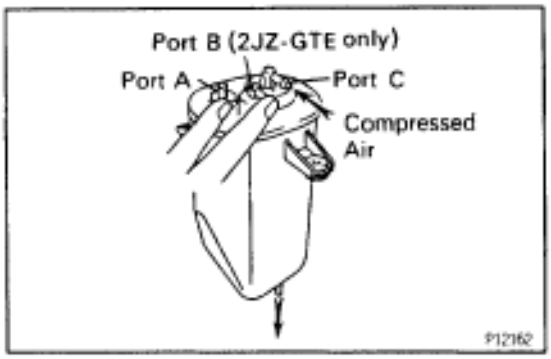

(d) Clean the filter in the canister.
Clean the filter by blowing 294 kPa (3 kgf/cm^2, 43 psi) of compressed air into port C while holding port A and B (2JZ–GTE only) closed.
NOTICE:
- **Do not attempt to wash the canister.**
- **No activated carbon should come out.**

(e) Reinstall the charcoal canister.

9. REPLACE GASKET IN FUEL TANK CAP

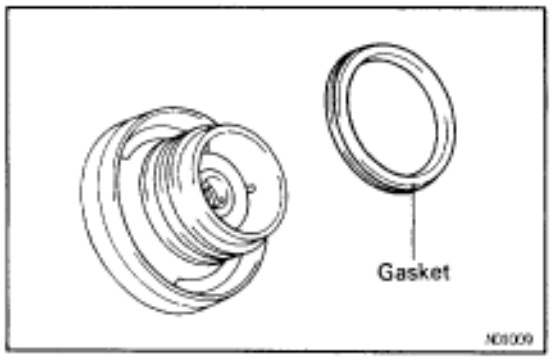

(a) Remove the old gasket from the tank cap. Do not damage the cap.
(b) Install a new gasket by hand.
(c) Check the cap for damage or cracks.
(d) Install the cap and check the torque limiter.

10. INSPECT FUEL LINES AND CONNECTIONS
Visually check the fuel lines for cracks, leakage, loose connections, deformation or tank band looseness.

11. INSPECT EXHAUST PIPES AND MOUNTINGS
Visually check the pipes, hangers and connections for severe corrosion, leaks or damage.

12. ADJUST VALVE CLEARANCE
(See valve clearance inspection and adjustment in Engine Mechanical)
Valve clearance (Cold):
Intake
0.15–0.25 mm (0.006–0.010 in.)
Exhaust
0.25–0.35 mm (0.010–0.014 in.)

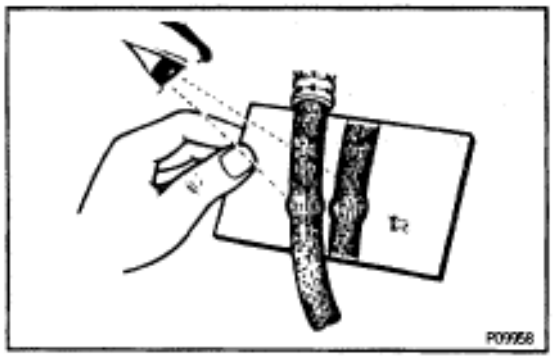

BRAKES

13. INSPECT BRAKE LINE PIPES AND HOSES

HINT: Check in a well lighted area. Check the entire circumference and length of the brake hoses using a mirror as required. Turn the front wheels fully right or left before checking the front brake.

(a) Check all brake lines and hoses for:
- Damage
- Wear
- Deformation
- Cracks
- Corrosion
- Leaks
- Bends
- Twists

(b) Check all clamps for tightness and connections for leakage.

(c) Check that the hoses and lines are clear of sharp edges, moving parts and the exhaust system.

(d) Check that the lines installed in grommets pass through the center of the grommets.

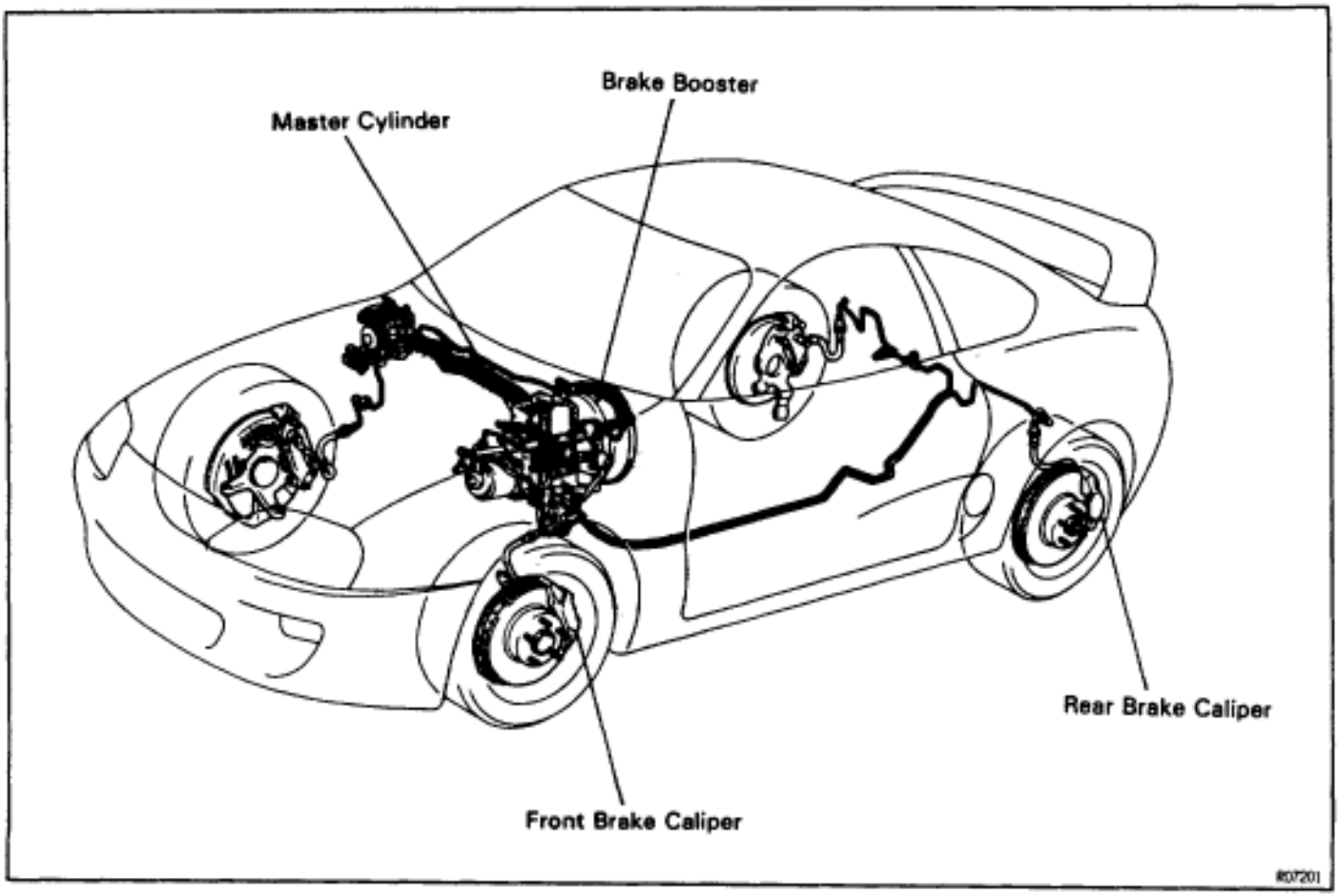

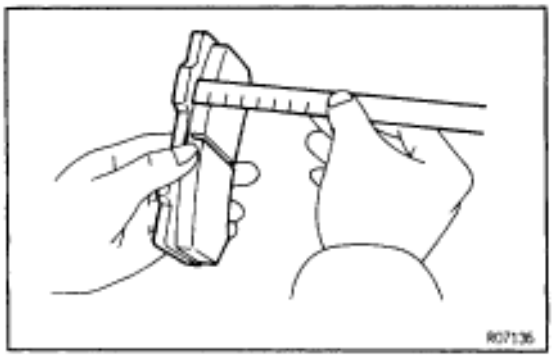

14. INSPECT BRAKE PADS AND DISCS FOR FRONT AND REAR

(a) Check the thickness of the disc brake pads and check for irregular wear.

Minimum pad thickness:

1.0 mm (0.039 in.)

HINT: If a squealing or scraping noise comes from the brake during driving, check the pad wear indicator to see if it is contacting the disc rotor. If so, the disc pad should be replaced.

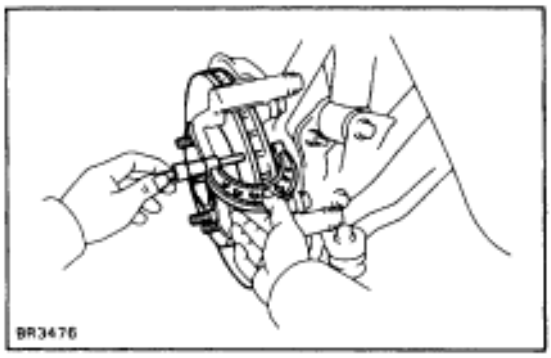

(b) Check the disc for wear or runout.

Minimum disc thickness:

Front

2JZ–GE

30.0 mm (1.181 in.)

2JZ–GTE

28.0 mm (1.102 in.)

Rear

15.0 mm (0.591 in.)

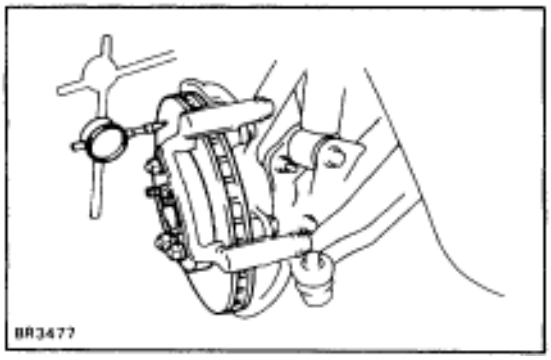

Maximum disc runout:

0.05 mm (0.0020 in.)

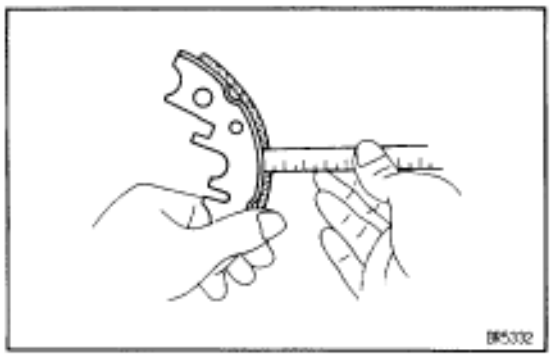

15. INSPECT BRAKE LININGS AND DRUMS FOR PARKING BRAKE

(a) Check the lining–to–drum contact condition and lining wear.

Minimum lining thickness:

1.0 mm (0.039 in.)

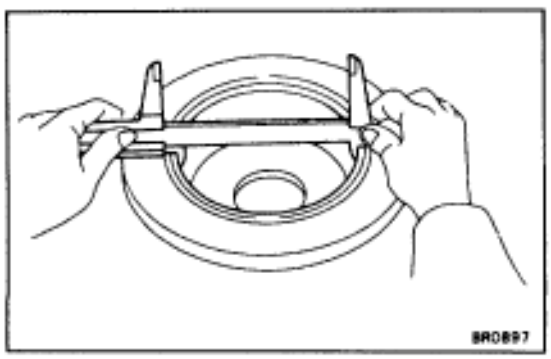

(b) Check the brake drums for scoring or wear.

Maximum drum inside diameter:

191 mm (7.520 in.)

(c) Clean the brake parts with a damp cloth.

NOTICE: Do not use compressed air to clean the brake parts.

(d) Settle the parking brake shoes and drum. When performing the road test in item 24, do the following:

- Drive the vehicle at approx. 50 km/h (30 mph) on a safe, level and dry road.
- With the parking brake button pushed in, pull on the lever with 88 N (9 kgf, 20 lbf) of force.
- Drive the vehicle for approx. 400 meters (1/4 mile) in this condition.
- Repeat this procedure 2 or 3 times.
- Check parking lever travel.

If necessary, adjust the parking brake.

CHASSIS

16. INSPECT STEERING LINKAGE

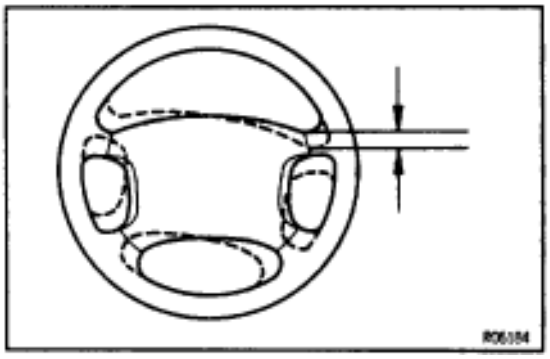

(a) Check the steering wheel freeplay.

Maximum freeplay:

30 mm (1.18 in.)

With the vehicle stopped and pointed straight ahead, rock the steering wheel gently back and forth with light finger pressure.

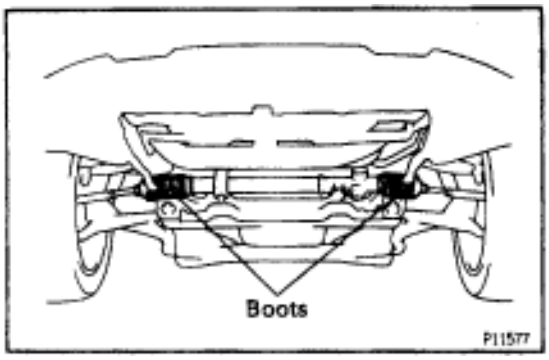

(b) Check the steering linkage for looseness or damage.

Check that:

- Tie rod ends do not have excessive play.
- Dust seals and boots are not damaged.
- Boot clamps are not loose.

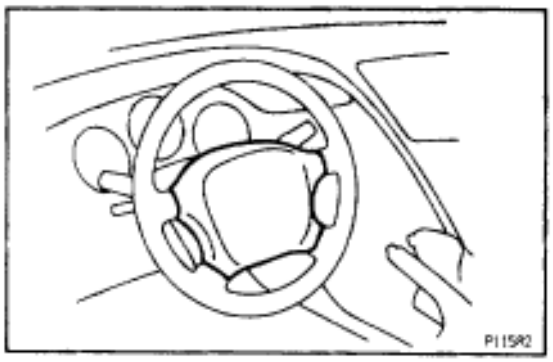

17. INSPECT SRS AIRBAG

Driver Airbag:

Visually inspect the steering wheel pad (airbag and inflater).

- Use the diagnosis check to check if there are abnormalities.
- Check that there are no cuts, cracks or noticeable color changes on the surface of the steering wheel pad or in the center groove of the pad.
- Remove the steering wheel pad from the vehicle and check the wiring and steering wheel for damage and corrosion due to rusting, etc.

If necessary, replace the steering wheel pad.

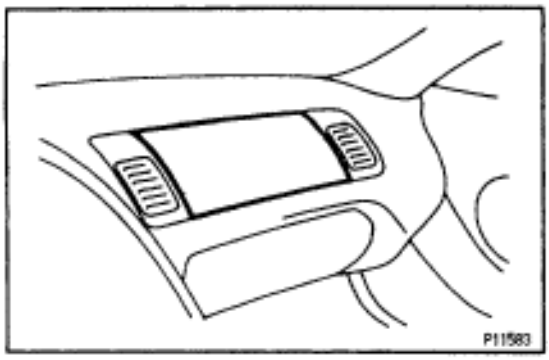

Front Passenger Airbag:

Visually inspect the front passenger airbag assembly (airbag and inflater).

- Use the diagnosis check to check if there are abnormalities.
- Check that there are no cuts, cracks or noticeable color changes in the front passenger airbag door.
- Remove the front passenger airbag assembly from the vehicle and check the wiring and front passenger airbag door for damage and corrosion due to rusting, etc.

If necessary, replace the front passenger airbag assembly.

CAUTION:

- **For removal and replacement of the steering wheel pad or front passenger airbag assembly, see RS section and be sure to perform the operation in the correct order.**
- **Before disposing of the steering wheel pad or front passenger airbag assembly must first be deployed by using SST (See RS section).**

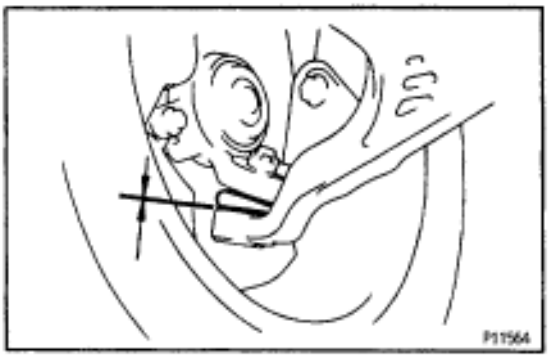

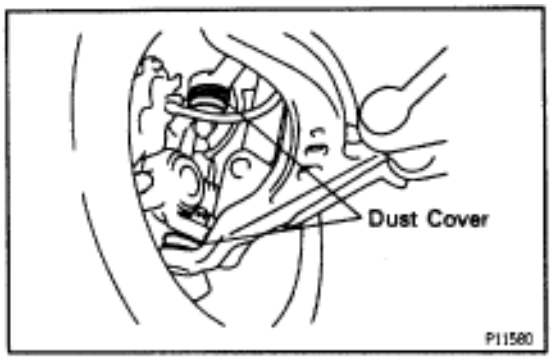

18. INSPECT STEERING GEAR HOUSING OIL

Check the steering gear housing for oil leakage.

19. INSPECT BALL JOINTS AND DUST COVERS

(a) Inspect the ball joints for excessive looseness.

- Jack up the front of the vehicle and support it with stands.
- Make sure the front wheels are in a straight–ahead position, and depress the brake pedal.
- Jack up the lower suspension arm until there is about half a load on the front coil spring.
- Move the front wheel up and down and check that the ball joint has no excessive play.

Maximum lower ball joint vertical play:

0.3 mm (0.012 in.)

If the play is greater than maximum, replace the ball joint.

(b) Visually check the dust covers for damage.

20. INSPECT TRANSMISSION OIL (FLUID) AND DIFFERNTIAL OIL

Visually check the transmission and differential for oil (fluid) leakage.

If leakage is found, check for the cause and repair.

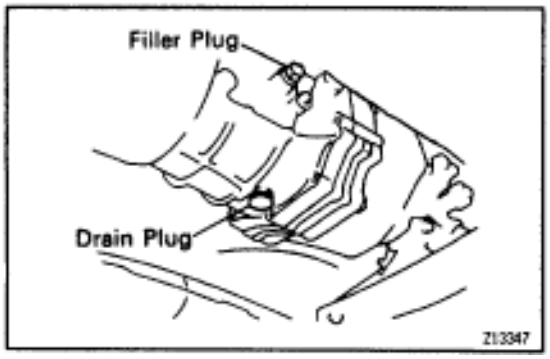

21. REPLACE TRANSMISSION OIL (FLUID) AND DIFFERENTIAL OIL

A. Replace manual transmission oil

(a) Remove the filler and drain plugs, and drain the oil.
(b) Reinstall the drain plug securely.
(c) Add fresh oil untill it begins to run out of the filler hole.

Transmission oil:

2JZ–GE

Oil grade

API GL–5

Viscosity

SAE 75W–90

Capacity

2.6 liters (2.7 US qts, 2.3 lmp. qts)

2JZ–GTE

Oil

Castle gear oil V160

Capacity

1.8 liters (1.9 US qts, 1.6 lmp. qts)

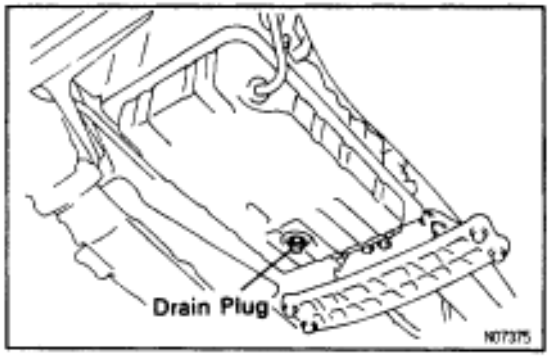

B. Replace automatic transmission fluid

(a) Remove the drain plug, and drain the fluid.
(b) Clean the drain plug.
(c) Reinstall the drain plug securely.

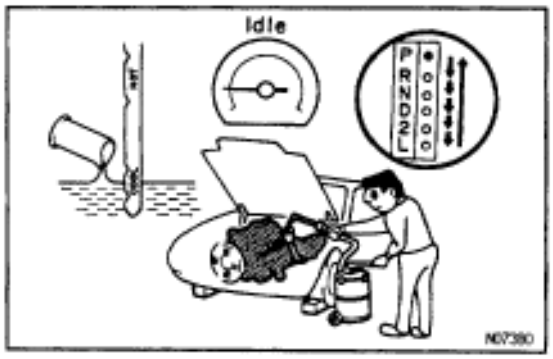

(d) With the engine OFF, add new fluid through the dip–stick tube.

Transmission fluid:

2JZ–GE

Fluid type

ATF DEXRON® II or equivalent

Drain and refill capacity

1.6 liters (1.7 US qts, 1.4 lmp. qts)

2JZ–GTE

Fluid type

ATF type T–II or equivalent

Drain and refill capacity

1.9 liters (2.0 US qts, 1.7 lmp. qts)

(e) Start the engine and shift the selector into all positions from ”P” through ”L”, and then shift into ”P” position.
(f) With the engine idling, check the fluid level. Add fluid up the ”COOL” range on the dipstick.

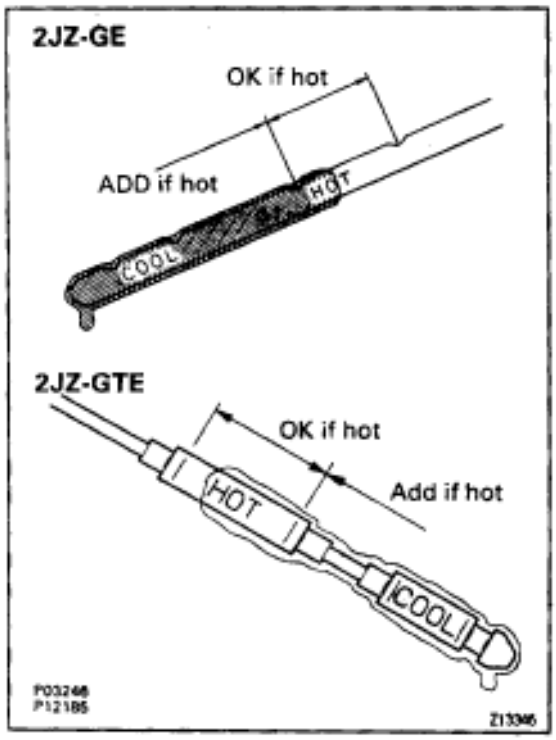

(g) Check that the fluid level is in the "HOT" range at the normal operating temperature (70–80˚C (158–176˚F)) and add as necessary.
NOTICE: Do not overfill.

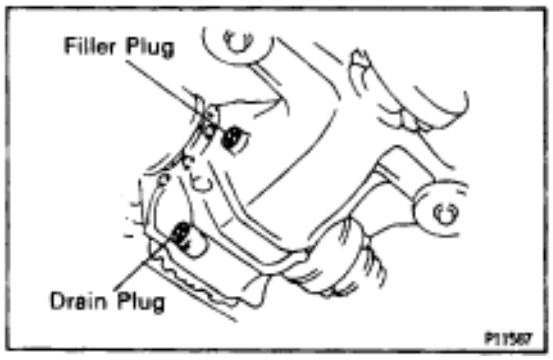

C. Replace differential oil

(a) Remove the filler and drain plugs, and drain the oil.
(b) Clean the drain plug.
(c) Reinstall the drain plug securely.
(d) Add new oil until it begins to run out of the filler hole.
Differential oil:
Oil grade
API GL–5
Viscosity
Above–18°C (0°F) SAE 90
Below–18°C (0°F) SAE 80W–90 or 80W
Capacity
1.35 liters (1.43 US qts, 1.19 Imp. qts)
(e) Reinstall the filler plug securely.

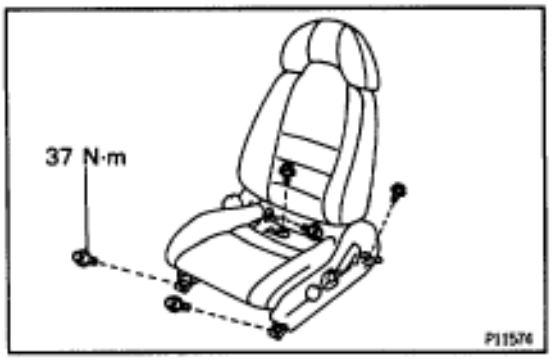

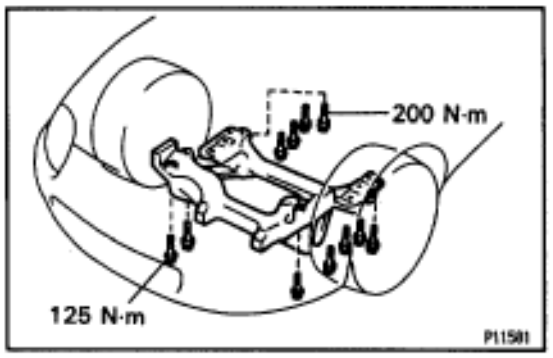

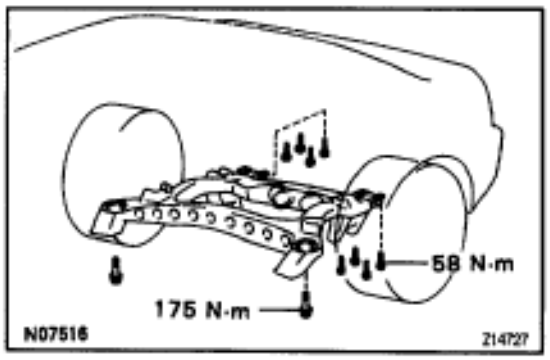

22. TIGHTEN BOLTS AND NUTS ON CHASSIS AND BODY

Tighten the following parts:

- Front seat–to–body mounting bolts

Torque: 37 N·m (375 kgf·cm, 27 ft·lbf).

- Front suspension member–to–body mounting bolt

Torque:

Front side
125 N·m (1,280 kgf·cm, 92 ft·lbf)

Rear side
200 N·m (2,040 kgf·cm, 148 ft·lbf)

- Rear suspension member–to–body mounting bolts.

Torque: 175 N·m (1,790 kgf·cm, 129 ft·lbf)

- Rear suspension member rear cushion–to–body mounting bolts

Torque: 58 N·m (590 kgf·cm, 43 ft·lbf)

23. BODY INSPECTION

(a) Check the body exterior for dents, scratches and rust.

(b) Check the underbody for rust and damage.
If necessary, replace or repair.

24. ROAD TEST

(a) Check the engine and chassis for abnormal noises.
(b) Check that the vehicle does not wander or pull to one side.
(c) Check that the brakes work properly and do not drag.
(d) Perform setting of the parking brake shoes and drum.

25. FINAL INSPECTION

(a) Check the operation of the body parts:

- Hood
  Auxiliary catch operates properly
  Hood locks securely when closed
- Front and rear doors
  Door locks operate properly
  Doors close properly
- Luggage compartment door
  Door lock operates properly
- Seats
  Seat adjusts easily and locks securely in any position
  Front seat back locks securely in any position
  Folding–down rear seat backs lock securely

(b) Be sure to deliver a clean car. Especially check:

- Steering wheel
- Shift lever knob
- All switch knobs
- Seats

GENERAL MAINTENANCE

There are some maintenance and inspection items which are considered to be the owner's responsibility. They can be performed by the owner or be can have them done at a service shop. These items include those which should be checked on a daily basis, those which, in most cases, do not require (special) tools and those which are considered to be reasonable for the owner to perform. Items and procedures for general maintenance are as follows:

OUTSIDE VEHICLE

1. TIRES

(a) Check the pressure with a gauge. Adjust if necessary.

(b) Check for cuts, damage, uneven or excessive wear.

2. WHEEL NUTS

When checking the tires, check the nuts for looseness or for missing nuts. If necessary, tighten them.

3. WINDSHIELD WIPER BLADES

Check for wear or cracks whenever they do not wipe clean. Replace if necessary.

4. FLUID LEAKS

(a) Check underneath for leaking fuel, oil, water or other fluid.

(b) If you smell gasoline fumes or notice any leak, have the cause found and corrected.

5. DOORS AND ENGINE HOOD

(a) Check that all doors including the trunk lid operate smoothly, and that all latches lock securely.

(b) Check that the engine hood secondary latch secures the hood from opening when the primary latch is released.

INSIDE VEHICLE

6. LIGHTS

(a) Check that the headlights, stop lights, tail–lights, turn signal lights, and other lights are all working.

(b) Check the headlight aiming.

7. WARNING LIGHT AND BUZZERS

Check that all warning lights and buzzers function properly.

8. HORN

Check that it is working.

9. WINDSHIELD GLASS

Check for scratches, pits or abrasions.

10. WINDSHIELD WIPER AND WASHER

(a) Check operation of the wipers and washer.

(b) Check that the wipers do not streak.

11. WINDSHIELD DEFROSTER

Check that the air comes out from the defroster outlet when operating the heater air conditioner at defroster mode.

12. REAR VIEW MIRROR

Check that it is mounted securely.

13. SUN VISORS

Check that they move freely and are mounted securely.

14. STEERING WHEEL

Check that it has the specified freeplay. Be alert for changes in steering condition, such as excessive steering effort, excessive freeplay or strange noise.

15. SEATS

(a) Check that all front seat controls such as seat adjusters, seatback recliner, etc. operate smoothly.

(b) Check that all latches lock securely in any position.

(c) Check that the locks hold securely in any latched position.

(d) Check that the head restraints move up and down smoothly and that the locks hold securely in any latched position.

(e) For folding–down rear seat backs, check that the latches lock securely.

16. SEAT BELTS

(a) Check that the seat belt system such as buckles, retractors and anchors operate properly and smoothly.

(b) Check that the belt webbing is not cut, frayed, worn or damaged.

17. ACCELERATOR PEDAL

Check the pedal for smooth operation and uneven pedal effort or catching.

18. BRAKE PEDAL

(a) Check that pedal for smooth operation.

(b) Check that the pedal has the proper reserve distance and freeplay.

(c) Check the brake booster function.

19. BRAKES

At a safe place, check that the brakes do not pull to one side when applied.

20. PARKING BRAKE

(a) Check that the pedal has the proper travel.

(b) On a safe incline, check that the vehicle is held securely with only the parking brake applied.

21. AUTOMATIC TRANSMISSION PARK MECHANISM

(a) Check the lock release button of the selector lever for proper and smooth operation.

(b) On a safe incline, check that the vehicle is held securely with the selector lever in the ”P” position and all brakes released.

UNDER HOOD

22. WINDSHIELD WASHER FLUID

Check that there is sufficient fluid in the tank.

23. ENGINE COOLANT LEVEL

Check that the coolant level is between the LEVEL lines on the see–through reservoir at normal temperature (20˚C (68˚F)).

24. RADIATOR AND HOSES

(a) Check that the front of the radiator is clean and not blocked with leaves, dirt or bugs.

(b) Check the hoses for cracks, kinks, rot or loose connections.

25. BATTERY ELECTROLYTE LEVEL

Check the indicator.

When the indicator color is blue, the condition is satisfactory. A red color indicates that distilled water must be added, and white indicates that charging is necessary.

26. BRAKE FLUID LEVEL

Check that the brake fluid level is near the upper level line on the see–through reservoir.

27. ENGINE DRIVE BELT

Check drive belt for fraying, cracks, wear or oil contamination.

28. ENGINE OIL LEVEL

Check that level on the dipstick with the engine turned off.

29. POWER STEERING FLUID LEVEL

Check the level on the dipstick.

The level should be in the ”HOT” or ”COLD” range depending on the fluid temperature.

30. AUTOMATIC TRANSMISSION FLUID LEVEL

(a) Park the vehicle on a level surface.

(b) With the engine idling and the parking and foot brake applied, shift the selector into all positions from ”P” to ”L”, and then shift into ”P” position.

(c) Turn and pull out the dipstick and wipe off the fluid with a clean rag.

Re–insert the dipstick fully and check that the fluid level is in the ”HOT” range.

(d) Perform this check with the fluid at normal driving temperature (70–80˚C (158–176˚F)).

If the level is at the low side, add fluid.

NOTICE: Do not overfill.

HINT: Wait about 30 minutes before checking the fluid level after extended driving at high speeds in hot weather, driving in heavy traffic or with a trailer.

31. EXHAUST SYSTEM

Visually inspect for cracks, holes or loose supports.

If any change in the sound of the exhaust or smell of the exhaust fumes is noticed, have the cause located and correted.

SERVICE SPECIFICATIONS

SERVICE DATA

Engine	Spark plug		
	Recommended spark plug	2JZ–GE ND	PK16R11
		NGK	BKR5EP11
		2JZ–GTE ND	PK20R11
		NGK	BKR6EP11
	Correct electrode gap		1.1 mm (0.043 in.)
	Firing order		1–5–3–6–2–4
	Valve clearance	Intake	0.15–0.25 mm (0.006–0.010 in.)
		Exhaust	0.25–0.35 mm (0.010–0.014 in.)
Brake	Front and rear brakes		
	Pad thickness	Minimum	1.0 mm (0.039 in.)
	Disc thickness	Minimum Front 2JZ–GE	30.0 mm (1.181 in.)
		2JZ–GTE	28.0 mm (1.102 in.)
		Rear	15.0 mm (0.591 in.)
	Disc runout	Maximum	0.05 mm (0.0020 in.)
	Parking brake		
	Lining thickness	Maximum	1.0 mm (0.039 in.)
	Drum inside diameter	Maximum	191 mm (7.520 in.)
Chassis	Steering linkage		
	Steering wheel freeplay	Maximum	30 mm (1.18 in.)
	Ball joint		
	Vertical play	Maximum	0.3 mm (0.012 in.)

TORQUE SPECIFICATIONS

Part tightened		N·m	kgf·cm	ft·lbf
Spark plug x Cylinder head		18	180	13
Front seat x Body		37	375	27
Front suspension member x Body	Front side	125	1,280	92
	Rear side	200	2,040	148
Rear suspension member x Body		175	1,790	129
Rear suspension member rear cushion x Body		58	590	43

PROPELLER SHAFT

PREPARATION

SST (SPECIAL SERVICE TOOLS)

	09325–20010	Transmission Oil Plug	2JZ–GE M/T
	09325–40010	Transmission Oil Plug	2JZ–GE A/T
	09330–00021	Companion Flange Holding Tool	
	09330–50010	Propeller Shaft Center Bearing Replacer	2JZ–GE
	09370–50010	Drive Line Angle Gauge	
	09608–12010	Front Hub & Drive Pinion Bearing Replacer Set	
	(09608–00070)	Drive Pinion Rear Bearing Cone Replacer	Center support bearing
	09608–35014	Axle Hub & Drive Pinion Bearing Tool Set	
	(09608–06040)	Front Hub Inner Bearing Cone Replacer	Center support bearing
	09922–10010	Variable Open Wrench	Adjusting nut
	09950–00020	Bearing Remover	

RECOMMENDED TOOLS

PR04C – 01

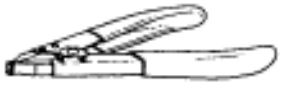	09905–00012	Snap Ring No. 1 Expander •	

EQUIPMENT

Torque wrench	
Dial indicator	
Vernier calipers	

PRECAUTION

Be careful not to grip the propeller shaft tube too tightly in the vise as this will cause deformation.

TROUBLESHOOTING

Use the table to help you find the cause of the problem. The numbers indicate the priority of the likely cause of the problem. Check each part in order. If necessary, replace these parts.

See Page / Parts Name / Trouble	PR–12 Sleeve yoke spline worn	PR–9 Center bearing worn	PR–10 PR–12 Propeller shaft runout	Propeller shaft imbalance	PR–10 PR–12 Sleeve yoke spline stuck	PR–10 PR–12 Spider bearing worn or stuck	PR–9 Flexible rubber coupling worn	Transmission extension housing rear bushing worn
Noise	2	1				4	3	
Vibration			3	4	2			1

PRECAUTION

Be careful not to grip the propeller shaft tube too tightly in the vise as this will cause deformation.

TROUBLESHOOTING

Use the table to help you find the cause of the problem. The numbers indicate the priority of the likely cause of the problem. Check each part in order. If necessary, replace these parts.

See Page / Parts Name / Trouble	Sleeve yoke spline worn	Center bearing worn	Propeller shaft runout	Propeller shaft imbalance	Sleeve yoke spline stuck	Spider bearing worn or stuck	Flexible rubber coupling worn	Transmission extension housing rear bushing worn
See Page	PR–12	PR–9	PR–10 PR–12		PR–10 PR–12	PR–10 PR–12	PR–9	
Noise	2	1				4	3	
Vibration			3	4	2			1

PROPELLER SHAFT
COMPONENTS

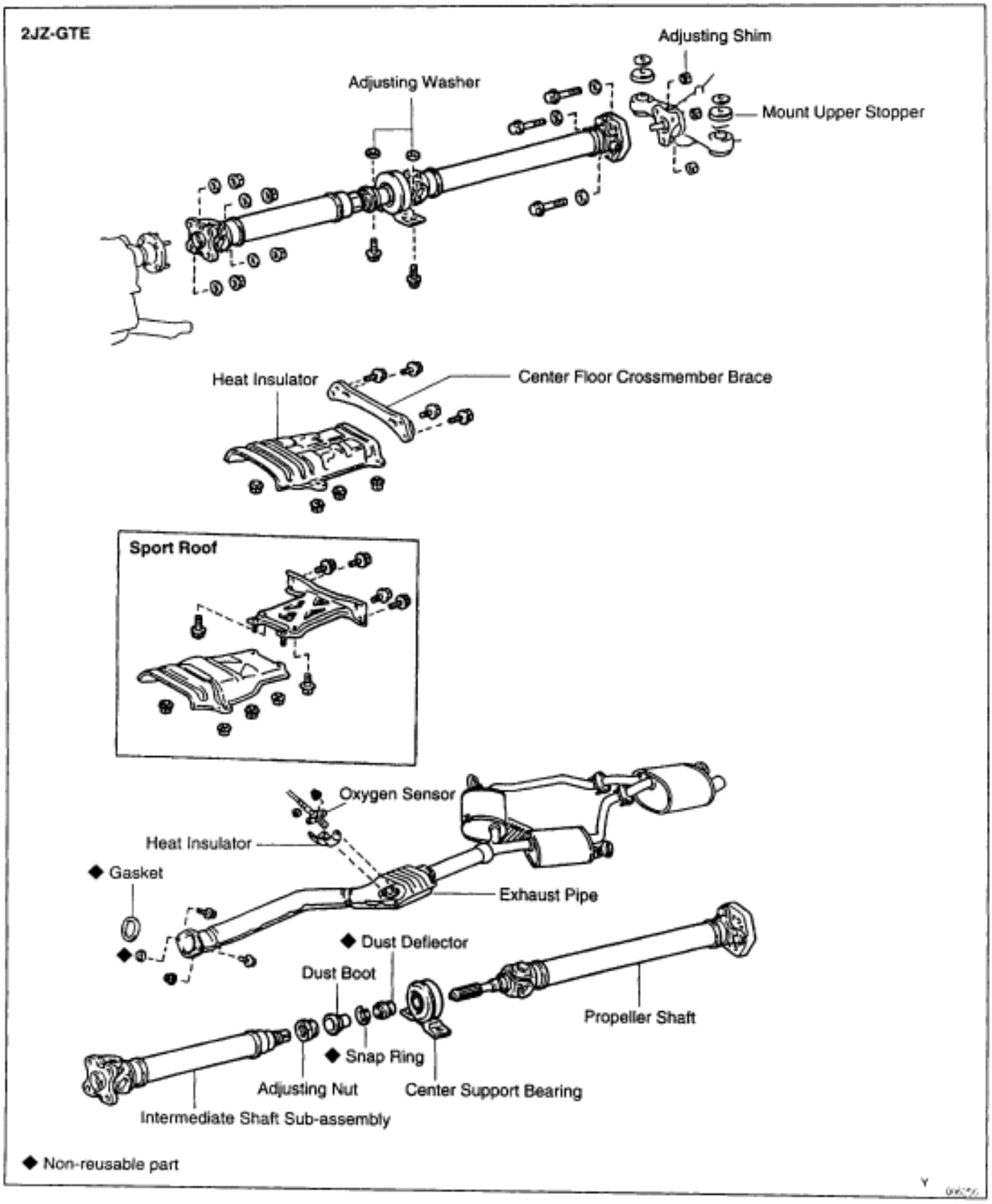

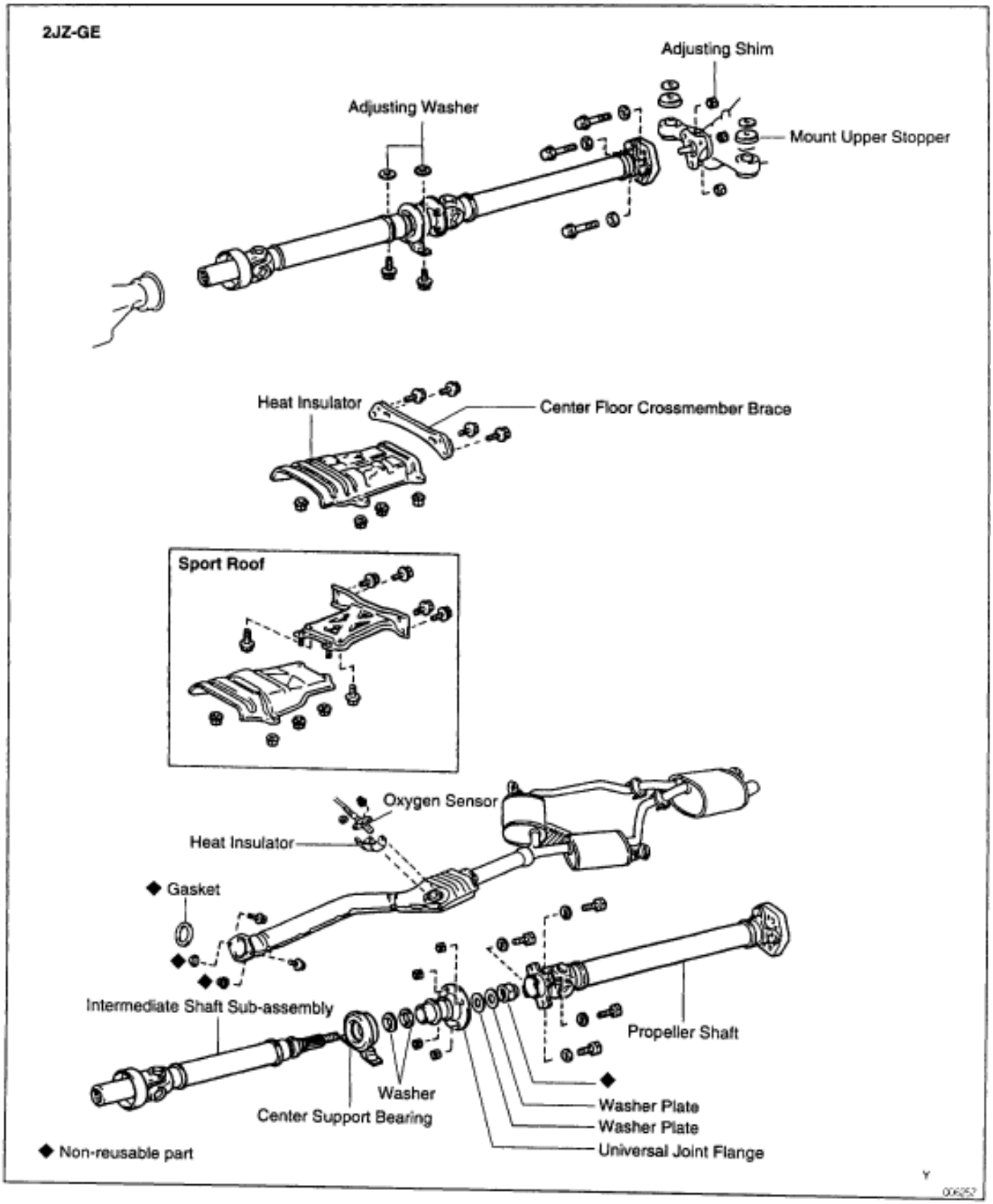
2JZ-GE
Adjusting Shim
Adjusting Washer
Mount Upper Stopper
Heat Insulator
Center Floor Crossmember Brace
Sport Roof
Oxygen Sensor
Heat Insulator
◆ Gasket
Intermediate Shaft Sub-assembly
Propeller Shaft
Washer
Center Support Bearing
◆
Washer Plate
Washer Plate
Universal Joint Flange
◆ Non-reusable part
00252

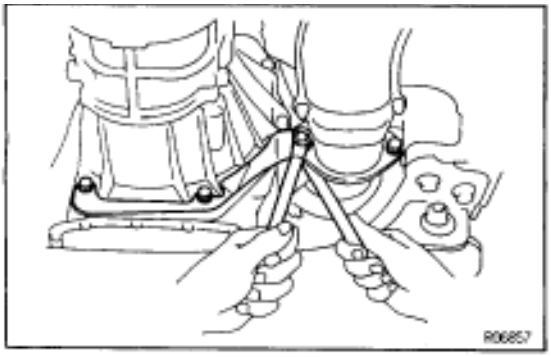

PROPELLER SHAFT REMOVAL

1. REMOVE OXYGEN SENSOR

(a) Remove the 2 bolts.

(b) Remove the oxygen sensor and heat insulator

2. REMOVE EXHAUST PIPE

(a) Remove the 2 bolts on the transmission side.

(b) Remove the 2 bolts and nuts, and pipe support bracket.

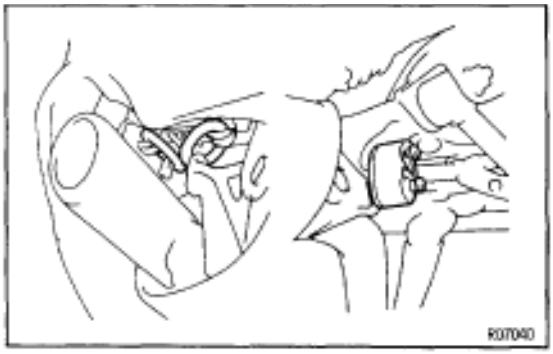

(c) Remove the 2 exhaust pipe support rings.

(d) Remove the 2 exhaust pipe support O–rings.

(e) Remove the exhaust pipe.

(f) Remove the gasket.

3. REMOVE HEAT INSULATOR

Remove the 4 nuts and heat insulator.

4. REMOVE CENTER FLOOR CROSSMEMBER BRACE

Normal Roof:

Remove the 4 bolts and crossmember brace.

Sport Roof:

Remove the 6 bolts and crossmember brace.

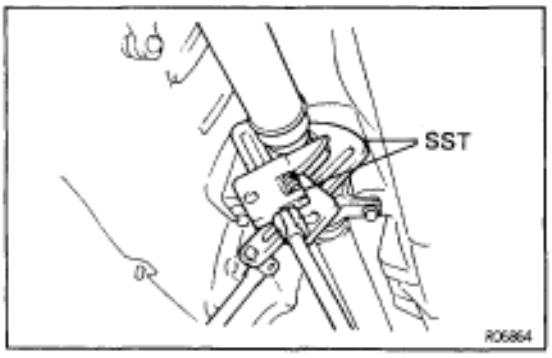

5. REMOVE PROPELLER SHAFT

2JZ–GTE:

(a) Using SST, loosen the adjusting nut until it can be turned by hand.

SST 09922–10010

HINT: Use 2 of the same type of SST.

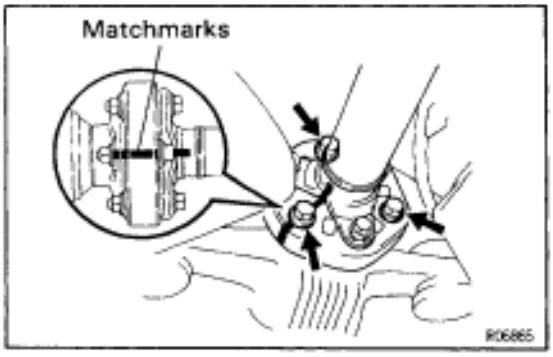

(b) Place the matchmarks on the differential companion flange and flexible coupling.

(c) Remove the 3 bolts inserted in the differential companion flange.

NOTICE: The bolts inserted in the propeller shaft companion flange should not be removed.

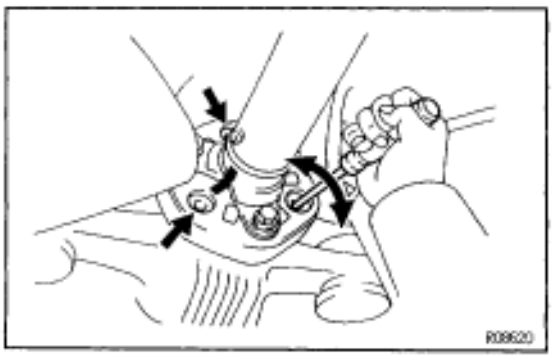

(d) Separate the flexible coupling from the differential side.

HINT: If the flexible coupling cannot be easily separated by hand, insert a screwdriver into the bolt hole of the flexible coupling, as shown in the illustration, then pry the coupling out.

NOTICE: Do not bring the screwdriver blade in direct contact with the flexible coupling's rubber portion.

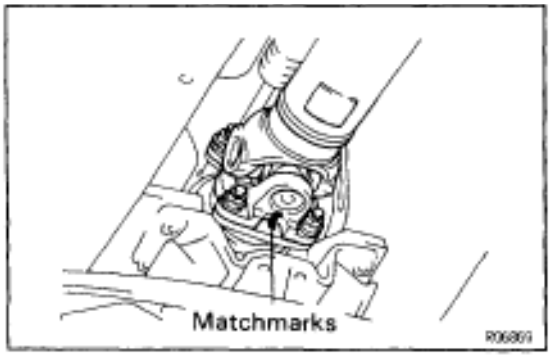

(e) Place matchmarks on the transmission companion flange and propeller shaft flanges.
(f) Remove the 4 washers and nuts.

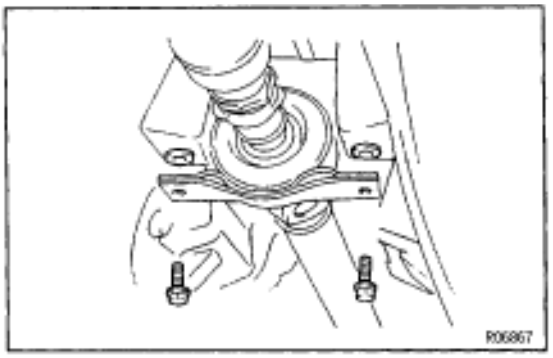

(g) Remove the 2 center support bearing set bolts and the adjusting washers.
HINT: Some vehicles are not equipped with an adjusting washer.
NOTICE: When removing the set bolts, support the center support bearing by hand so that the transmission and intermediate shaft, and propeller shaft and differential, remain in a straight line.
(h) Remove the propeller shaft from the transmission.
(i) Push the rear propeller shaft straight forward to compress the propeller shaft and pull out the propeller shaft from the centering pin of the differential.
NOTICE: Press the propeller shaft straight ahead to keep the transmission and intermediate shaft aligned straight.
(j) Pull the propeller shaft out toward the vehicle's rear.
NOTICE: The intermediate shaft and propeller shaft should not be separated.

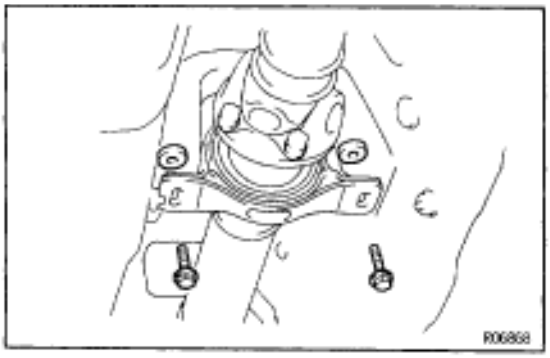

2JZ–GE:
(a) Remove the 2 center support bearing set bolts and the adjusting washers.
HINT: Production vehicles are not equipped with adjusting washers.
NOTICE: When removing the set bolts, support the center support bearing by hand so that the transmission and intermediate shaft, and propeller shaft and differential, remain in a straight line.

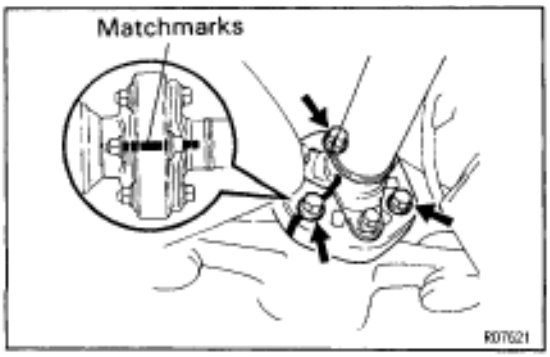

(b) Place the matchmarks on the differential companion flange and flexible coupling.
(c) Remove the 3 bolts inserted in the differential companion flange.
NOTICE: The bolts inserted in the propeller shaft companion flange should not be removed.

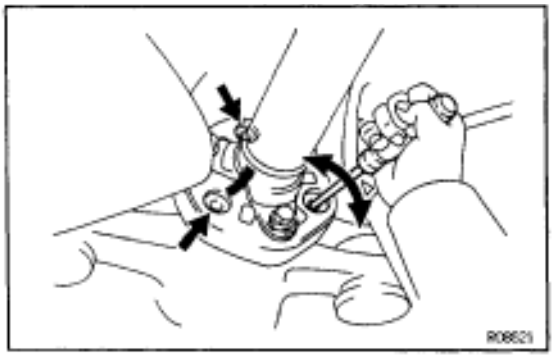

(d) Separate the flexible coupling from the differential side.
HINT: If the flexible coupling cannot be easily separated by hand, insert a screwdriver into the bolt hole of the flexible coupling, as shown in the illustration then pry the coupling out.
NOTICE: Do not bring the screwdriver blade in direct contact with the flexible coupling's rubber portion.

(e) Pull the yoke from the transmission.



(f) Install SST in the transmission to prevent oil leakage.
SST 09325–20010 (M/T)
09325–40010 (A/T)

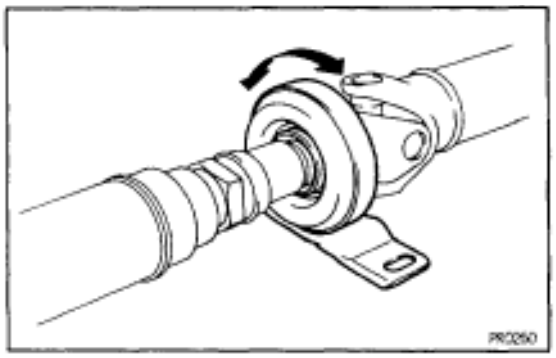

CENTER SUPPORT BEARING AND FLEXIBLE COUPLINGS INSPECTION

1. INSPECT CENTER SUPPORT BEARING

- Check for cracks in or damage to the cushion.
- Check if the bearing turns smoothly.

If the center support bearing is damaged, worn or does not turn smoothly, replace it.

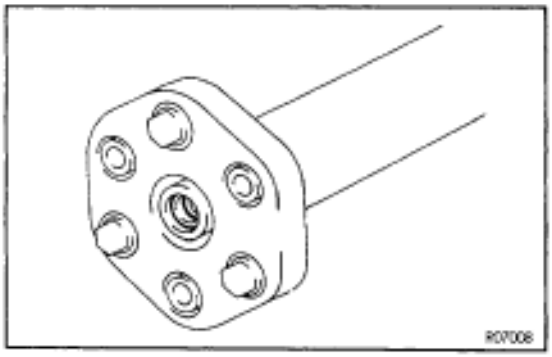

2. INSPECT FLEXIBLE COUPLINGS

- Check for cracks in or damage to rear flexible couplings.

If the flexible coupling is damaged, replace the propeller shaft assembly.

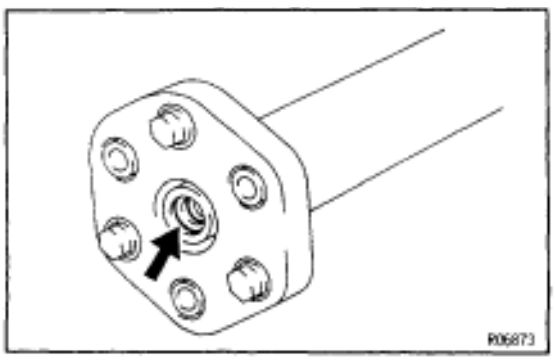

3. INSPECT FLEXIBLE COUPLING CENTERING BUSHING

- Check for damage to the bushing.

If the bushing is damaged, replace the propeller shaft assembly.

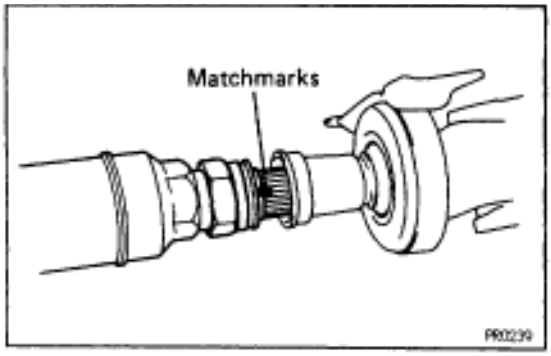

CENTER SUPPORT BEARING REPLACEMENT

2JZ–GTE:

1. SEPARATE INTERMEDIATE SHAFT AND PROPELLER SHAFT

(a) Place matchmarks on the intermediate shaft and propeller shaft.

(b) Separate the intermediate shaft and propeller shaft.

(c) Remove the dust boot from the propeller shaft.

HINT: If the dust boot is reused, remove it after wrapping vinyl tape around the spline, so it will not be damaged.

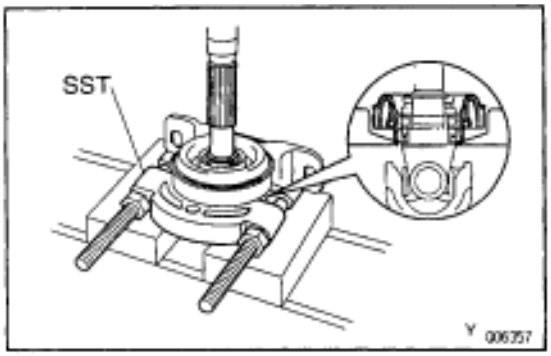

2. REMOVE CENTER SUPPORT BEARING

(a) Using a snap ring expander, remove the snap ring.

(b) Using SST, remove the center support bearing with dust deflector.

SST 09950–00020

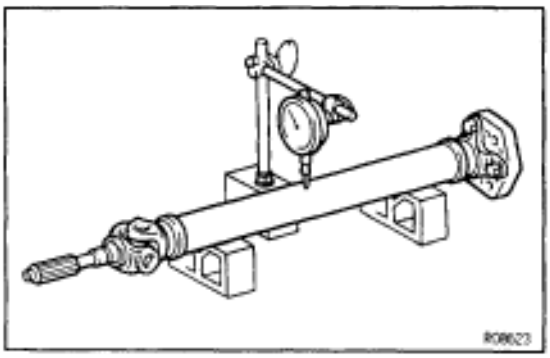

3. INSPECT RUNOUT OF INTERMEDIATE SHAFT AND PROPELLER SHAFT

Maximum runout:

0.8 mm (0.031 in.)

If the runout is greater than the maximum, replace the propeller shaft assembly.

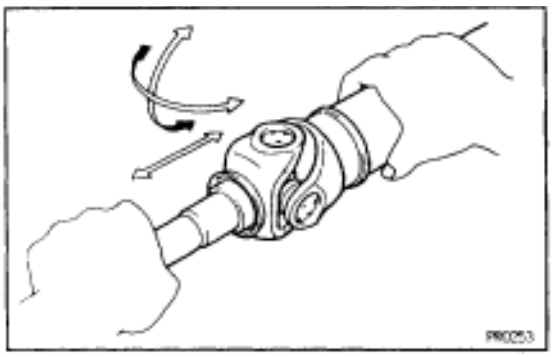

4. INSPECT SPIDER BEARING

- Check if the spider bearing rotates smoothly.
- Check if there is any play in the spider bearing.

If necessary, replace the propeller shaft assembly.

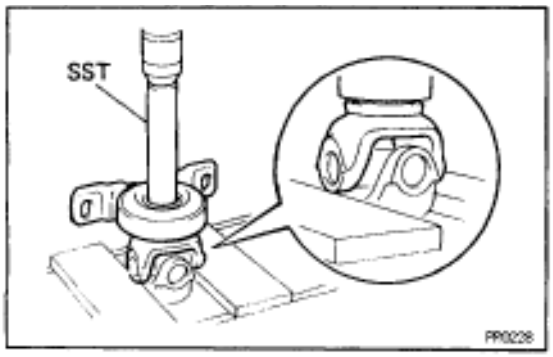

5. INSTALL CENTER SUPPORT BEARING

(a) Using SST and a press, install the center support bearing.

SST 09330–50010

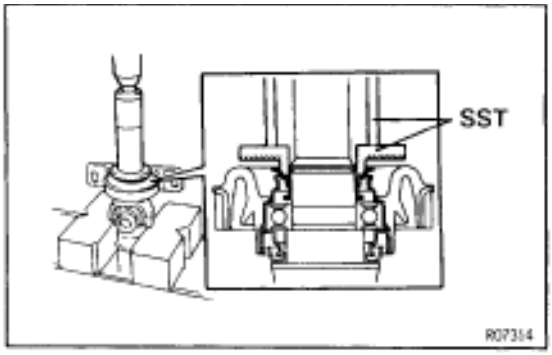

(b) Using SST and a press, insert a new dust deflector until it almost touches the rubber of the center support bearing.
SST 09608–12010 (09608–00070),
09608–35014 (09608–06040)

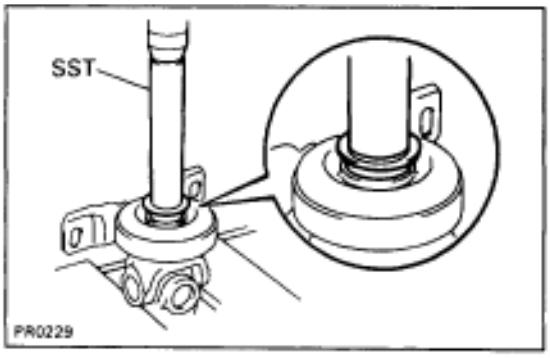

(c) Using SST and a press, install the dust deflector to the end.
SST 09330–50010
(d) Using a snap ring expander, install a new snap ring.

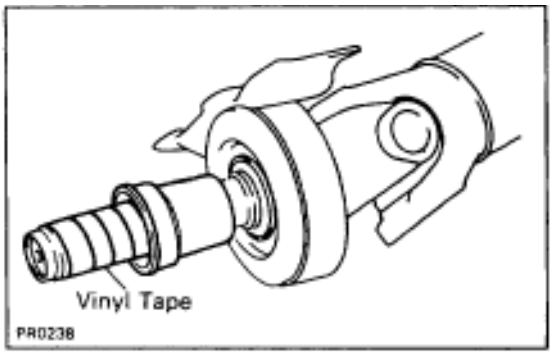

6. ASSEMBLE INTERMEDIATE SHAFT AND PROPELLER SHAFT

(a) Install the dust boot.
NOTICE: Assemble after wrapping vinyl tape around the spline so it will not damage the boot.
(b) Apply grease to the spline.
Grease:
Molybdenum disulphide lithium base, NLGI No.2.

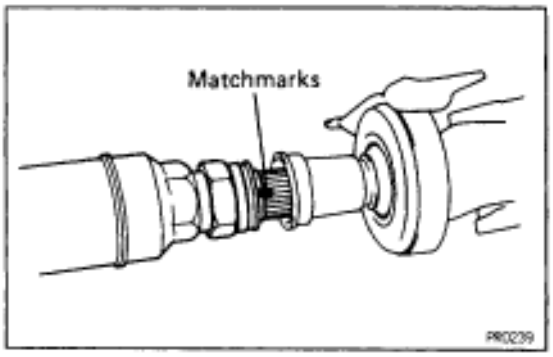

(c) Align the matchmarks and assemble the intermediate shaft and propeller shaft.
(d) Cover the adjusting nut with the dust boot.
(e) Tighten the adjusting nut fully by hand.

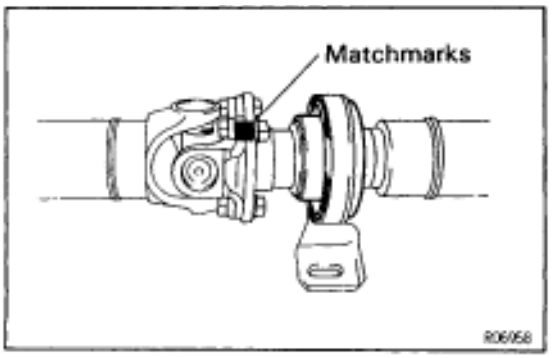

2JZ–GE:

1. SEPARATE PROPELLER SHAFT AND INTERMEDIATE SHAFT

(a) Place the matchmarks on the flanges.
(b) Remove the 4 bolts, washers and nuts.

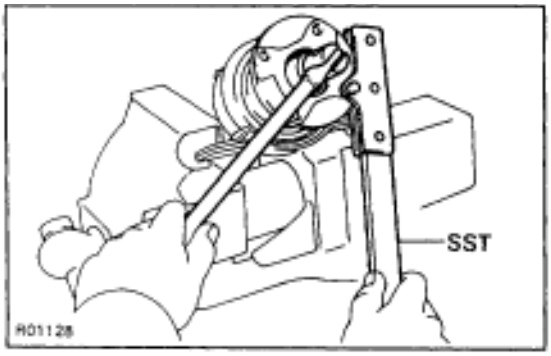

2. REMOVE CENTER SUPPORT BEARING FROM INTERMEDIATE SHAFT

(a) Using a hammer and chisel, loosen the staked part of the nut.
(b) Using SST to hold the flange, remove the nut.
SST 09930–00021
(c) Remove the 2 washers.

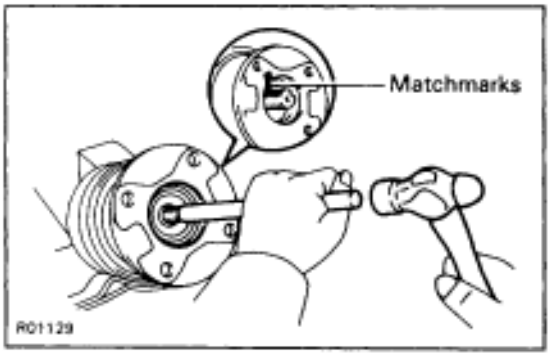

(d) Place matchmarks on the flange and intermediate shaft.
(e) Using a brass bar and hammer, remove the flange, 2 washers and center support bearing from the intermediate shaft.

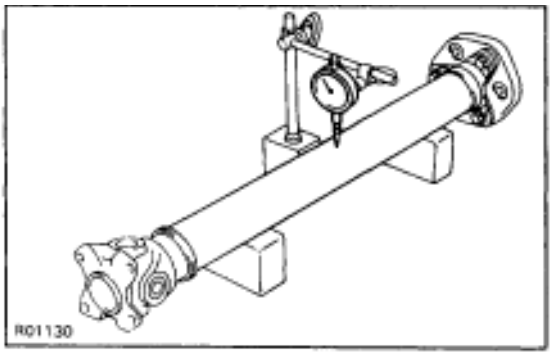

3. INSPECT RUNOUT OF INTERMEDIATE SHAFT AND PROPELLER SHAFT

Maximum runout:

0.8 mm (0.031 in.)

If the runout is greater than the maximum, replace the propeller shaft assembly.

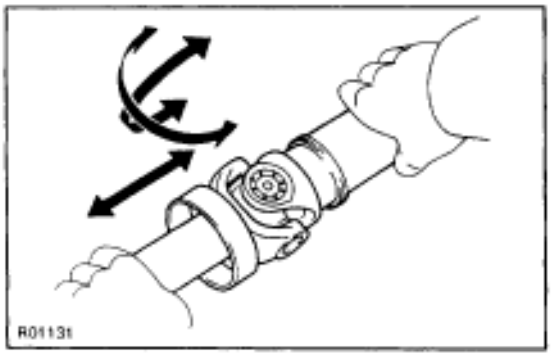

4. INSPECT SPIDER BEARING

- Check if the spider bearing rotates smoothly.
- Check if there is any play in the spider bearing.

If necessary, replace the propeller shaft assembly.

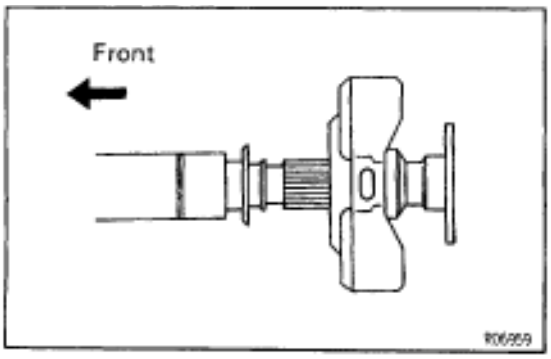

5. INSTALL CENTER SUPPORT BEARING ON INTERMEDIATE SHAFT

HINT: Install the center support bearing in the direction, as shown and install the 2 washers.

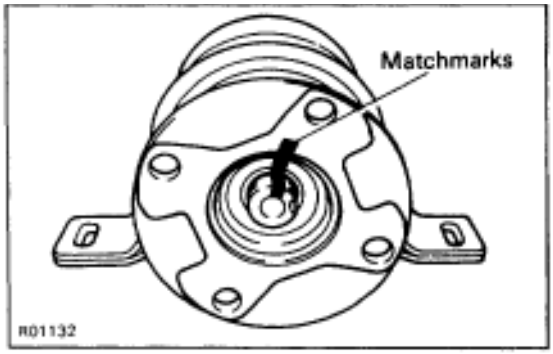

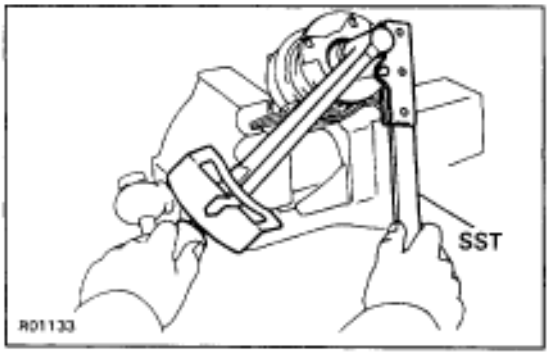

6. INSTALL FLANGE ON INTERMEDIATE SHAFT

(a) Coat the spline of the intermediate shaft with MP grease.

(b) Place the flange on the shaft and align the matchmarks.
HINT: If replacing either the center flange or intermediate shaft, reassemble them so that the front yoke of the intermediate shaft and the rear yoke of the propeller shaft are facing in the same direction.

(c) Install the 2 washers.

(d) Using SST to hold the flange, press the bearing into position by tightening down a new nut.
SST 09330–00021
Torque: 181 N·m (1,850 kgf·cm, 134 ft·lbf)

(e) Loosen the nut.

(f) Torque the nut again.
Torque: 69 N·m (700 kgf·cm, 51 ft·lbf)

(g) Using a hammer and punch, stake the shaft.

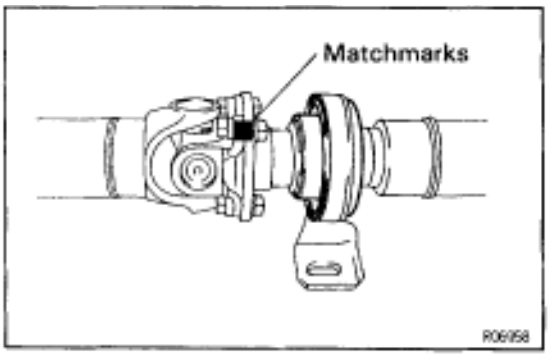

7. INSTALL PROPELLER SHAFT

(a) Align the matchmarks on the flanges and connect the flanges with 4 bolts, washers and nuts.
HINT: If replacing either the center flange or intermediate shaft, reassemble them so that the front yoke of the intermediate shaft and the rear yoke of the propeller shaft are facing in the same direction.

(b) Torque the 4 bolts and nuts.
Torque: 74 N·m (750 kgf·cm, 54 ft·lbf)

PROPELLER SHAFT INSTALLATION

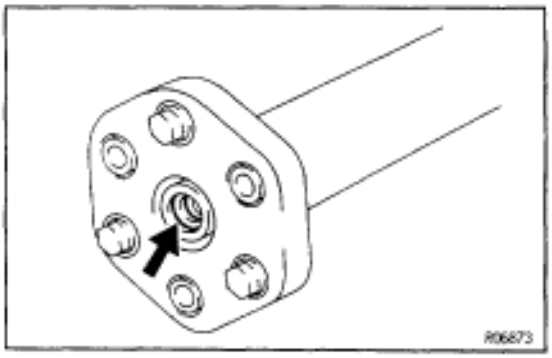

1. INSTALL PROPELLER SHAFT

(a) Apply grease to the flexible coupling centering bushings.
Grease:
Molybdenum disulphide lithium base, NLGI No. 1 or No. 2.

2JZ–GTE:

(a) Align the matchmarks on the flanges and connect the flanges with the 4 nuts and washers.

(b) Torque the 4 nuts.
Torque: 56 N·m (570 kgf·cm, 41 ft·lbf)

(c) Insert the propeller shaft from the vehicle's rear and connect the transmission and differential.
NOTICE: Support the center support bearing by hand so that the transmission and intermediate shaft, and propeller shaft and differential, remain in a straight line.

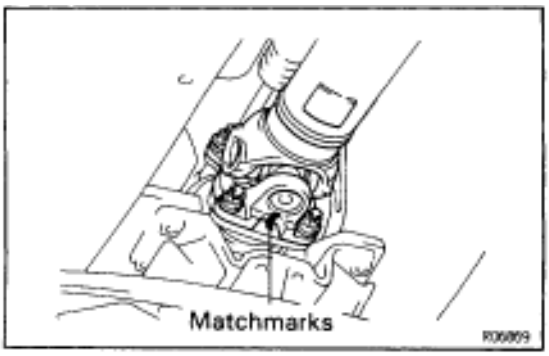

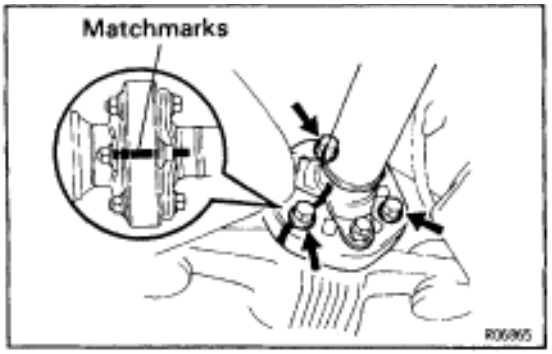

(d) Temporarily install the center support bearing set bolts with the adjusting washers.
HINT: Use the adjusting washers which were removed.

(e) Align the matchmarks and install the propeller shaft on the differential with the 3 bolts, washers and nuts.
NOTICE: Bolts should be inserted from the propeller shaft side.
Torque: 79 N·m (805 kgf·cm, 58 ft·lbf)

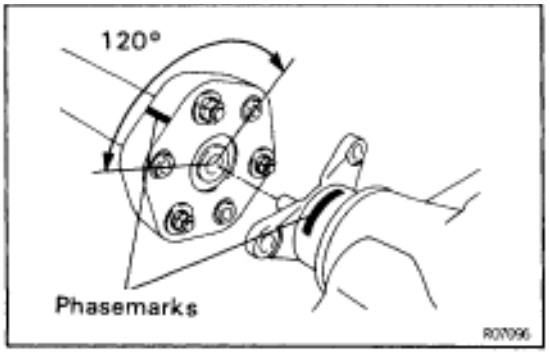

If using a new propeller shaft
w/ Phasemarks:
Install the propeller shaft phasemarks and differential phasemarks so that their respective alignment phasemarks match. If the propeller shaft phasemarks and differential phasemarks do not align, install the propeller shaft and differential alignment phasemarks as close together as possible.
w/o Phasemarks:
Install the propeller shaft.
(See page PR–13)

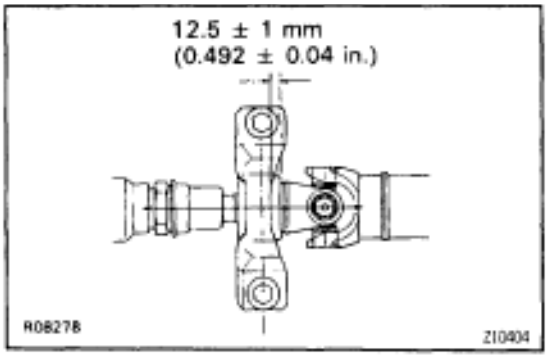

(f) Torque the 2 center support bearing set bolts.
Torque: 49 N·m (500 kgf·cm, 36 ft·lbf)
HINT: Adjust the center support bearing to keep the dimension, as shown with the vehicle in the unladen condition.
Under the same condition, check if the center line of the center support bearing is at right angles to the shaft axial direction.

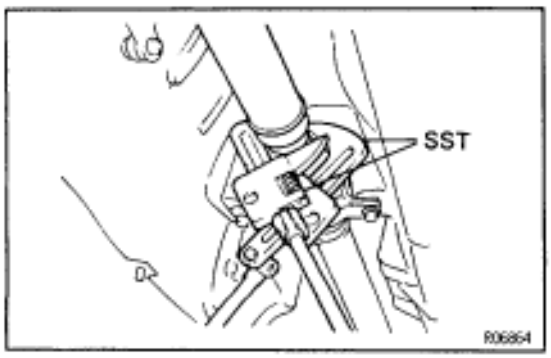

(g) Using SST, torque the adjusting nut.
SST 09922–10010
Torque: 50 N·m (515 kgf·cm, 37 ft·lbf)
HINT: Use torque wrench with a fulcrum length of 34.5 cm (13.6 in.)



2JZ–GE:

(a) Remove SST.

(b) Insert the propeller shaft to the transmission.

(c) Insert the propeller shaft from the vehicle's rear and connect the transmission and differential.

NOTICE: Support the center support bearing by hand so that the transmission and intermediate shaft, and propeller shaft and differential, remain in a straight line.

(d) Temporarily install the center support bearing set bolts with the adjusting washers.

HINT: Use the adjusting washers which were removed.

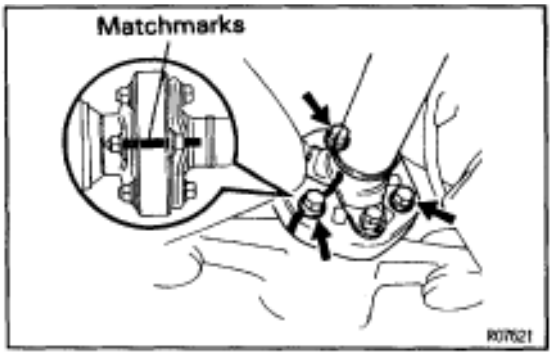

(e) Align the matchmarks and install the propeller shaft on the differential with the 3 bolts, washers and nuts.

NOTICE: Bolts should be inserted from the propeller shaft side.

Torque: 79 N·m (805 kgf·cm, 58 ft·lbf)

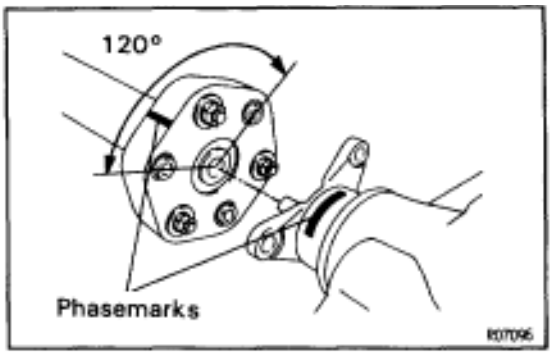

If using a new propeller shaft

w/ Phasemarks:

Install the propeller shaft phasemarks and differential phasemarks so that their respective alignment phasemarks match. If the propeller shaft phasemarks and differential phasemarks do not align, install the propeller shaft and differential alignment phasemarks as close together as possible.

w/o Phasemarks:

Install the propeller shaft.

(See page PR–13)

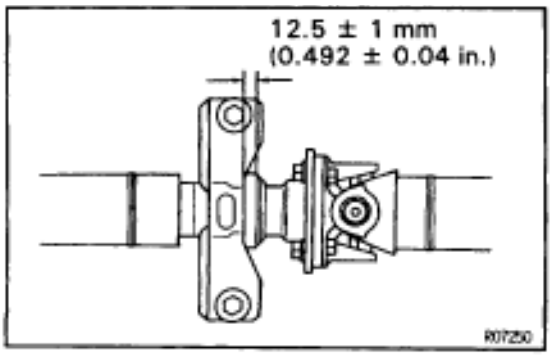

(f) Torque the 2 center support bearing set bolts.

Torque: 49 N·m (500 kgf·cm, 36 ft·lbf)

HINT: Adjust the center support bearing to keep the dimension, as shown with the vehicle in the unladen condition. Under the same condition, check if the center line of the center support bearing is at right angles to the shaft axial direction.

2. INSPECT PROPELLER SHAFT JOINT ANGLE
(See page PR–17)
NOTICE: The joint angle should be checked when the propeller shaft is removed and installed.

3. INSTALL CROSSMEMBER BRACE
Normal Roof:
Install the center floor crossmember brace and torque the 4 bolts.
Torque: 13 N·m (130 kgf·cm, 8 ft·lbf)
Sport Roof:
Install the center floor crossmember brace and torque the 6 bolts.
Torque: 13 N·m (130 kgf·cm, 8 ft·lbf)

4. INSTALL HEAT INSULATOR
Install the heat insulator and torque the 4 nuts.
Torque: 5.4 N·m (55 kgf·cm, 48 in.·lbf)

5. INSTALL EXHAUST PIPE
(a) Install a new gasket.
(b) Insert the exhaust pipe.
(c) Install the exhaust pipe to the 2 exhaust pipe support rings.
(d) Install the exhaust pipe to the 2 exhaust pipe support O–rings.
(e) Temporary install the pipe support bracket to the transmission with 2 bolts.
(f) Install the exhaust pipe with the 2 bolts and new 2 nuts.
Torque: 58 N·m (590 kgf·cm, 43 ft·lbf)
(g) Torque the 2 bolts.
Torque: 37 N·m (380 kgf·cm, 27 ft·lbf)

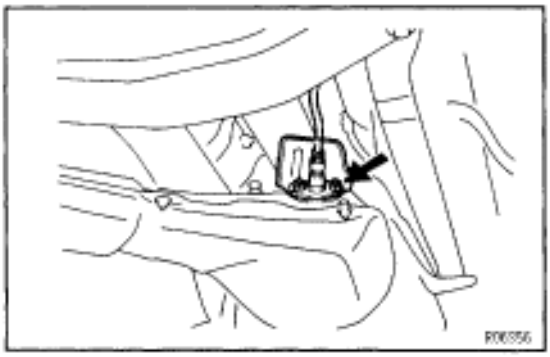

6. INSTALL OXYGEN SENSOR
(a) Install the oxygen sensor with heat insulator.
NOTICE: After installing the oxygen sensor, check that the wire is not twisted.
(b) Torque the 2 nuts.
Torque: 44 N·m (450 kgf·cm, 34 ft·lbf)

JOINT ANGLE INSPECTION AND ADJUSTMENT

NOTICE: When doing operations which involve the removal and installation of the propeller shaft, always check the joint. Make adjustments if necessary.



1. STABILIZE PROPELLER SHAFT AND DIFFERENTIAL

(a) Turn the propeller shaft several times by hand to stabilize the center support bearing and flexible couplings.

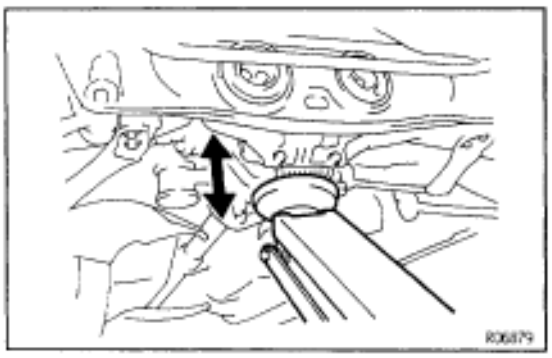

(b) Using a jack, raise and lower the differential to stabilize the differential mounting cushion.

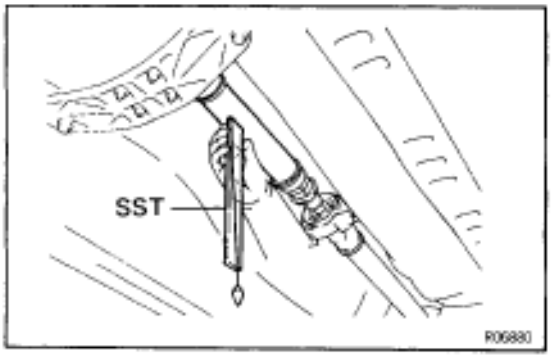

2. CHECK JOINT ANGLE OF NO.2 JOINT AND NO.3 JOINT

(a) Using SST, measure the installation angle of the intermediate shaft and propeller shaft.
SST 09370–50010
HINT: The SST should be directly underneath the tube.

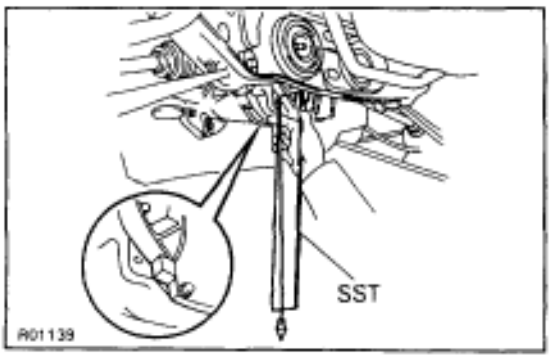

(b) Using SST, measure the installation angle of the differential.
SST 09370–50010
HINT: Measure the installation angle by placing the SST in the position, as shown in the illustration.

(c) Calculate the No.2 joint angle.

No.2 joint angle:

A – B = –1° 09' ± 36'

A: Intermediate shaft installation angle

B: Propeller shaft installation angle

(d) Calculate the No.3 joint angle.

No.3 joint angle:

B – C = 44' ± 36'

B: Propeller shaft installation angle

C: Differential installation angle

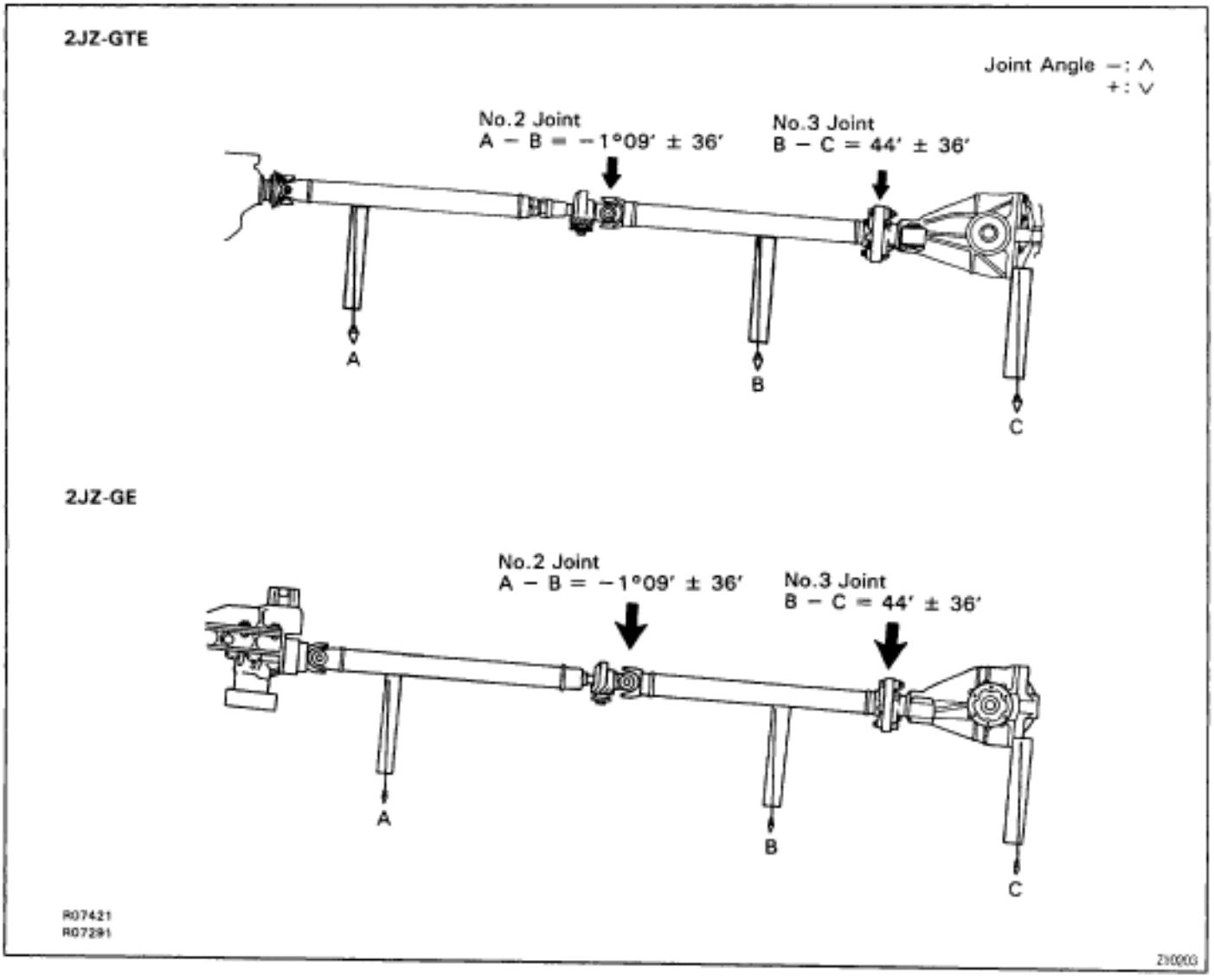

If the measured angle is not within the specification, adjust it with the center support bearing adjusting washer, differential mount upper stopper and adjusting shim.

		Thickness mm (in.)	Remarks
Center support bearing	Adjusting washer	2.0 (0.079) 4.0 (0.157) 6.0 (0.236) 8.5 (0.335)	• Left and right washers should be the same thickness. • 2 washers should not be assembled together. • Some vehicles are not assembled with washers.
Differential	Adjusting	1.0 (0.039) 1.6 (0.063) 2.0 (0.079)	• Left and right washers should be the same thickness • This slim is installed on top of the mount upper stopper. and is used for adjustment.

ADJUSTMENT CHART

HOW TO READ THIS CHART

Take measurements, then calculate the No.2 and No 3 joint angle.

Mark the calculated values on the chart and read the coordinates.

Replace the adjusting washer, shim and mount upper stopper in accordance with the coordinates read and adjust the joint angles.

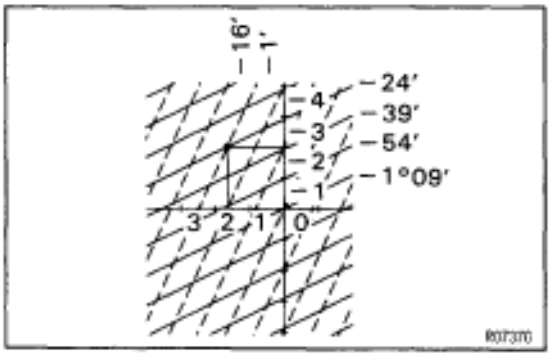

Example

Measurements (Installation angle):

Intermediate shaft 1˚ 50'

Propeller shaft 2˚ 14'

Differential 2˚ 15'

Joint angle:

NO.2 1˚ 50' – 2˚ 14' = –24'

NO.3 2˚ 14' – 2˚ 15' = –1'

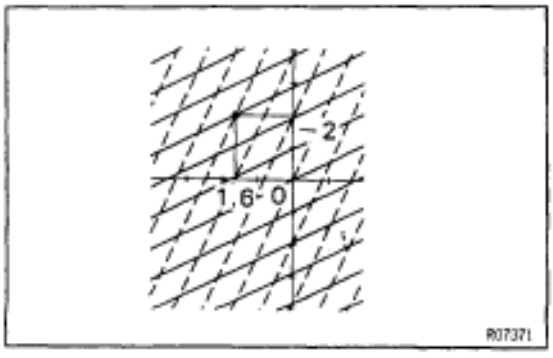

Adjustment:

Center support bearing

Standard parts 4 mm – 2 mm = 2 mm

Use adjusting washers which are 2 mm (0.079 in.) thicker.

Differential

Use adjusting shims which are 1.6 mm (0.063 in.) thicker.

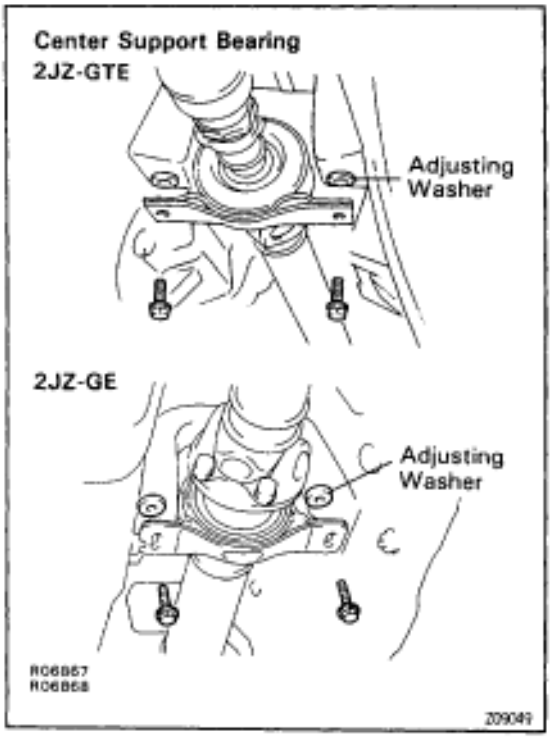

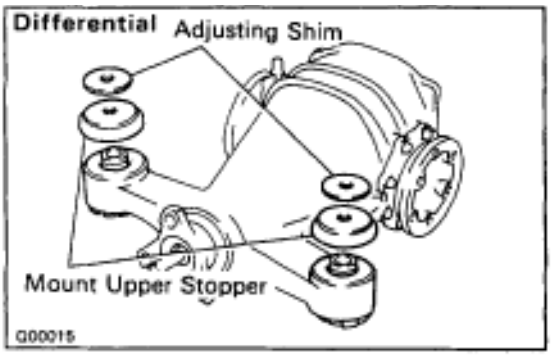

HINT:

- Maintain the same thickness for the adjusting washers and adjusting shims on both the left and right sides.
- If a washer, stopper and shim of the exact thickness are not available, use the parts which are nearest in thickness.

NOTICE: Check the joint angle once again after making the adjustment.

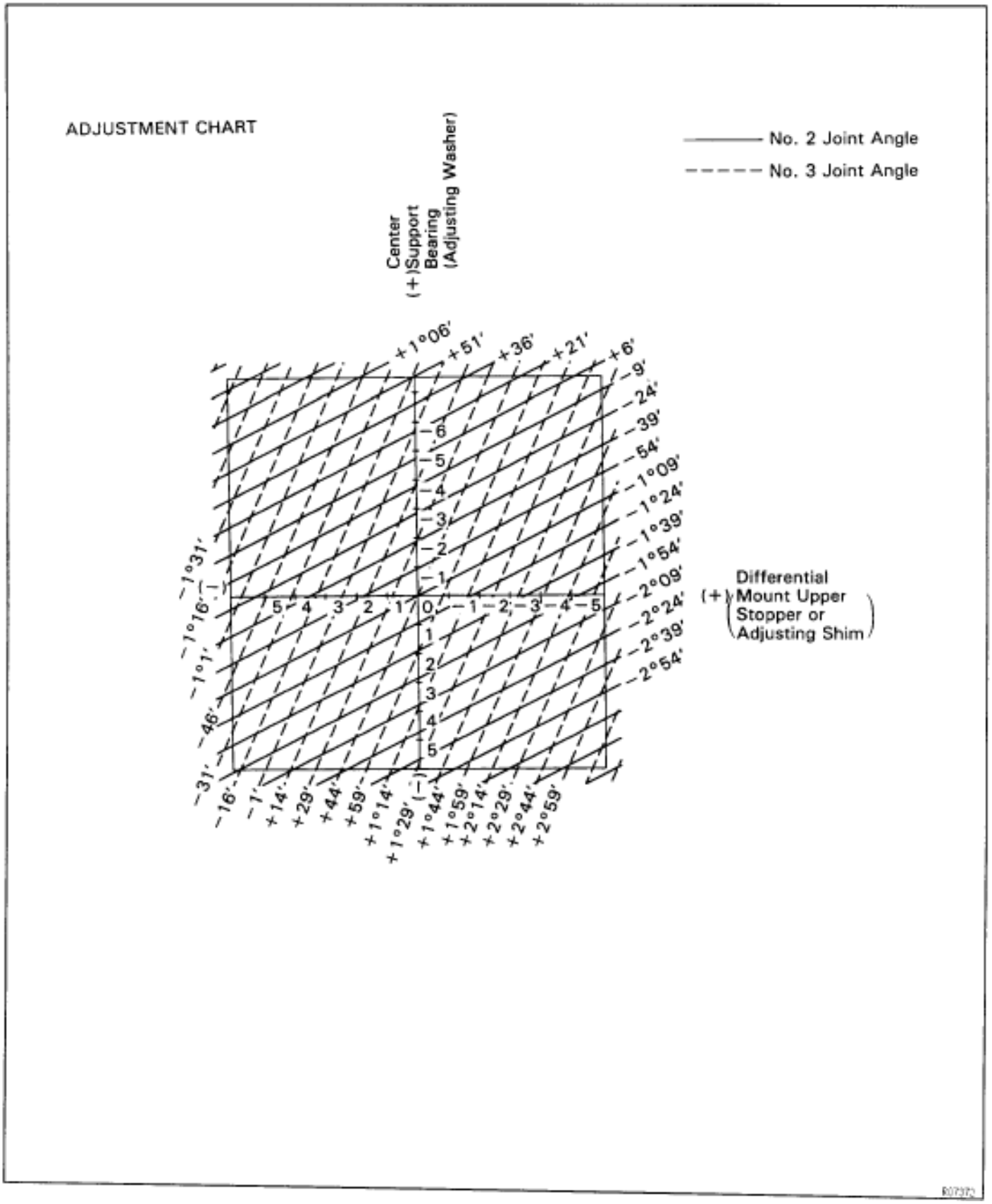
ADJUSTMENT CHART
No. 2 Joint Angle
No. 3 Joint Angle
Center Support Bearing (Adjusting Washer)
(+)
(−)
+1°06'
+51'
+36'
+21'
+6'
−9'
−24'
−39'
−54'
−1°09'
−1°24'
−1°39'
−1°54'
−2°09'
−2°24'
−2°39'
−2°54'
−1°31'
−1°16'
−1°1'
−46'
−31'
−16'
−1'
+14'
+29'
+44'
+59'
+1°14'
+1°29'
+1°44'
+1°59'
+2°14'
+2°29'
+2°44'
+2°59'
6
5
4
3
2
1
0
−1
−2
−3
−4
−5
Differential Mount Upper Stopper or Adjusting Shim
(+)

SERVICE SPECIFICATIONS

SERVICE DATA

Shaft runout	Limit	0.8 mm (0.031 in.)
Joint angle	No.2 joint	–1° 09' ± 36'
	No.3 joint	44' ± 36'

TORQUE SPECIFICATIONS

Part tightened		N·m	kgf·cm	ft·lbf
Propeller shaft x Differential		79	805	58
Propeller shaft x Intermediate shaft	(2JZ–GE)	74	750	54
Propeller shaft x Transmission	(2JZ–GTE)	56	570	41
Intermediate shaft x Center bearing x Universal joint flange	(2JZ–GE)			
1st		181	1,850	134
Loosen nut				
2nd		69	700	51
Center support bearing x Body		49	500	36
Oxygen sensor x Exhaust front pipe		44	450	34
Exhaust pipe x Exhaust manifold		58	590	43
Crossmember x Body		13	130	8
Heat insulator x Body		5.4	55	48 in.·lbf
Adjusting Nut	(2JZ–GTE)	50 (69)	515 (700)	37 (51)
Exhaust pipe support bracket X Transmission		37	380	27

( ): For use without SST

STARTING SYSTEM

PREPARATION

SST (SPECIAL SERVICE TOOLS)

	09286–46011	Injection Pump Spline Shaft Puller	Armature bearing
	09820–00030	Alternator Rear Bearing Replacer	Armature front bearing

RECOMMENDED TOOLS

	09082–00050	TOYOTA Electrical Tester Set ◆	

EQUIPMENT

Dial indicator	Commutator
Magnetic finger	Steel ball
Pull scale	Brush spring
Sandpaper	Commutator
Torque wrench	
V–block	Commutator
Vernier calipers	Commutator, Brush

ON–VEHICLE INSPECTION

NOTICE: Before changing the starter, check the following items again:

- **Connector connection**
- **Accessory installation, e.g.: theft deterrent system**

STARTER

COMPONENTS FOR REMOVAL AND INSTALLATION

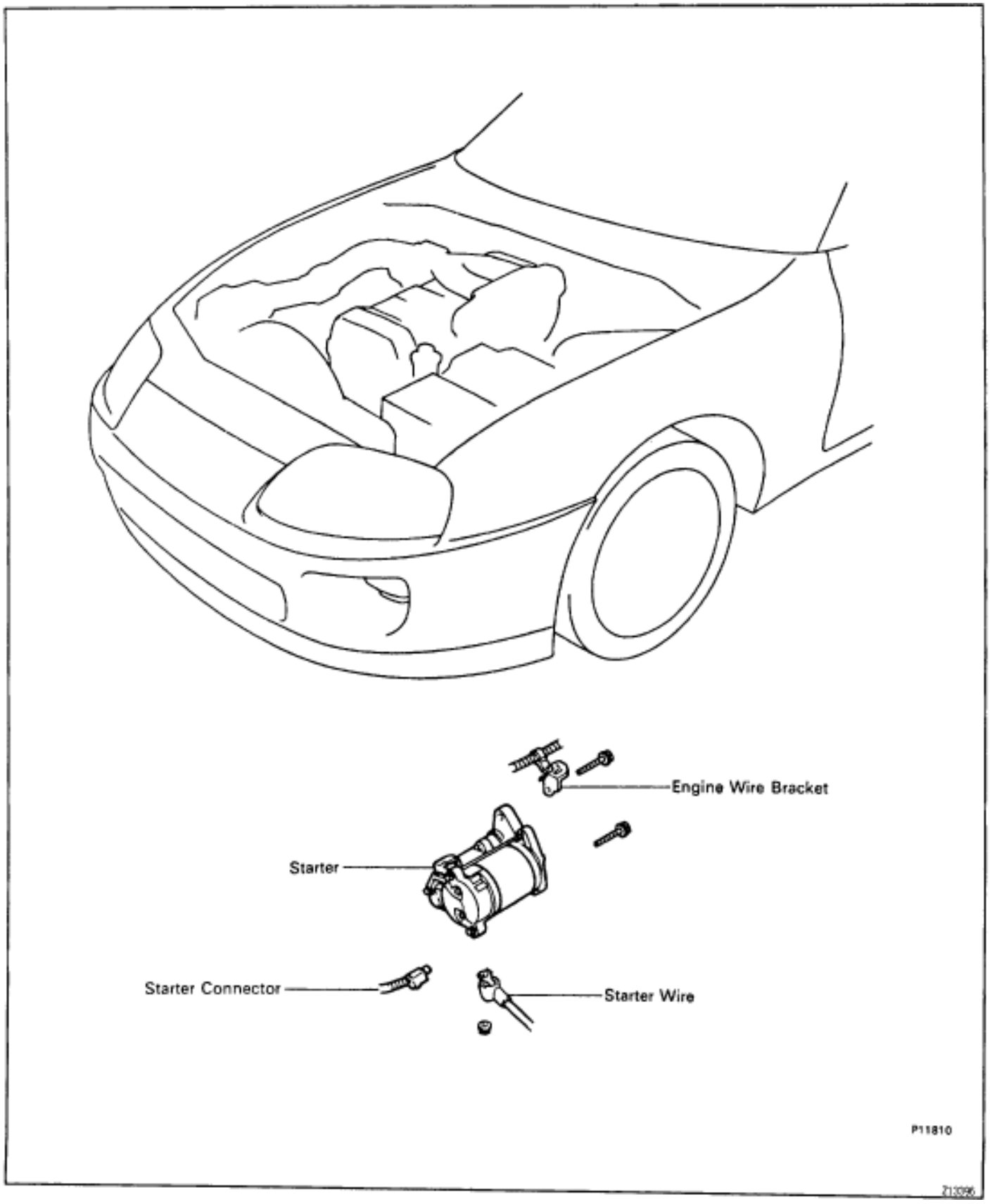

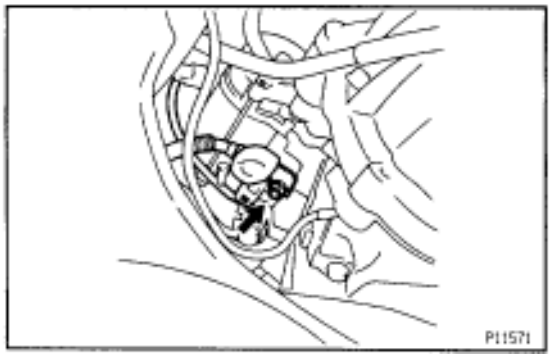

STARTER REMOVAL

Installation is in the reverse order of removal.

REMOVE STARTER

(a) Remove the rubber cap and nut, and disconnect the starter wire.

(b) Disconnect the starter connector.

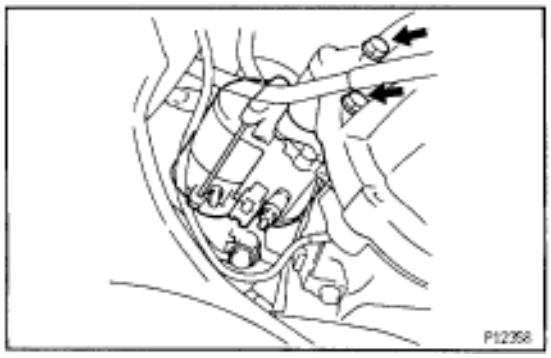

(c) Remove the 2 bolts and starter.
Torque: 39 N·m (400 kgf·cm, 29 ft·lbf)

COMPONENTS FOR DISASSEMBLY AND ASSEMBLY

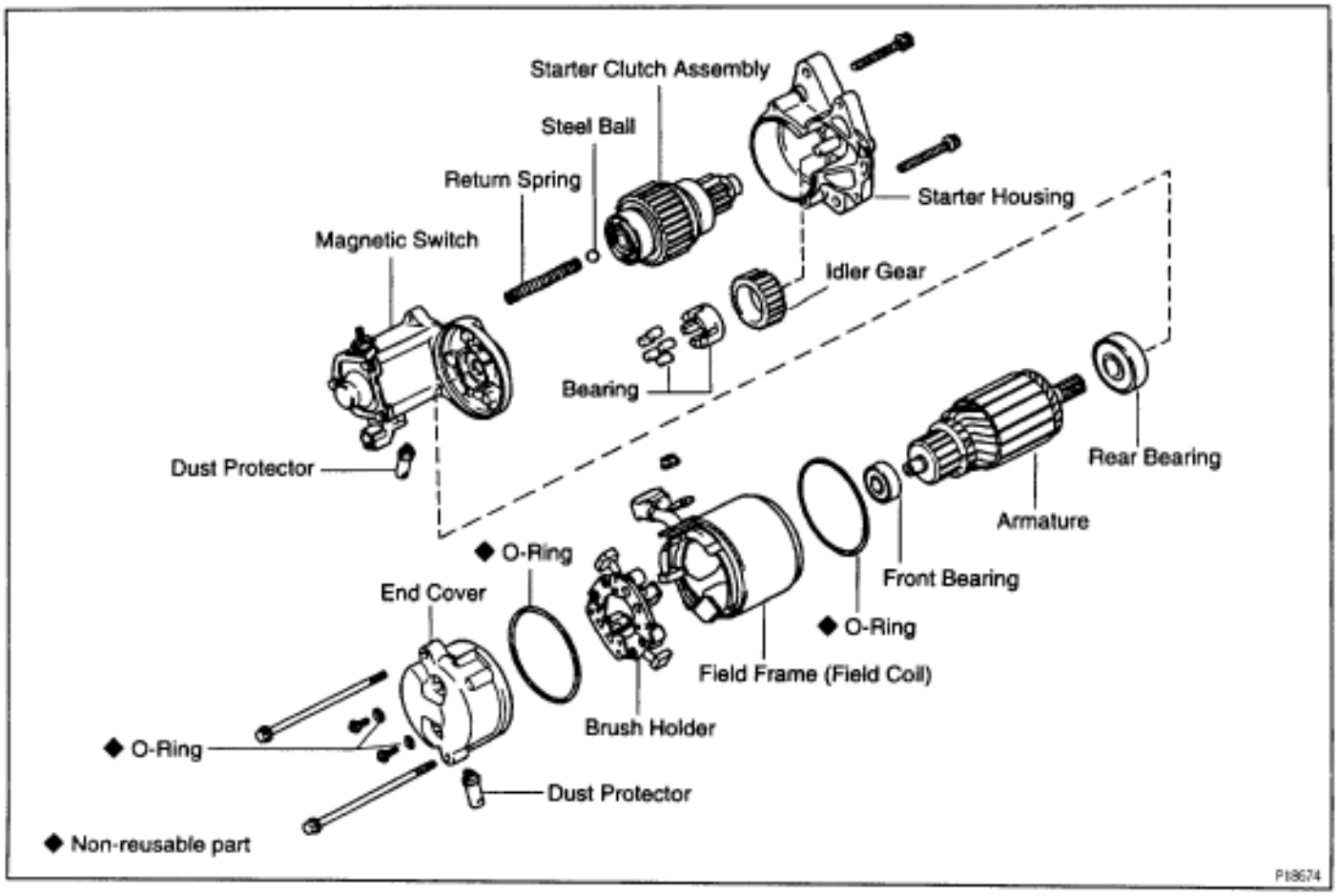

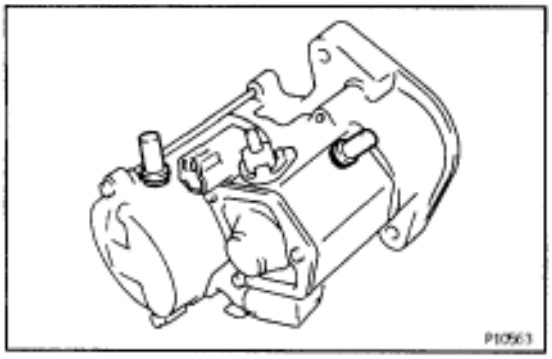

STARTER DISASSEMBLY

Assembly is in the reverse order of disassembly.

ASSEMBLY HINT: Use high–temperature grease to lubricate the bearings, gears return spring and steel ball when assembling the starter.

1. REMOVE DUST PROTECTORS

Remove the 2 dust protectors.

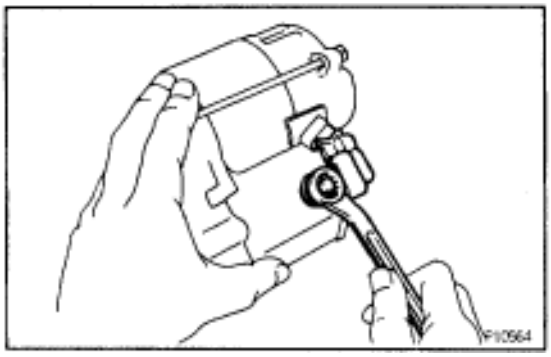

2. REMOVE FIELD FRAME AND ARMATURE

(a) Remove the nut, and disconnect the lead wire from the magnetic switch terminal.
Torque: 7.9 N·m (81 kgf·cm, 70 in.·lbf)

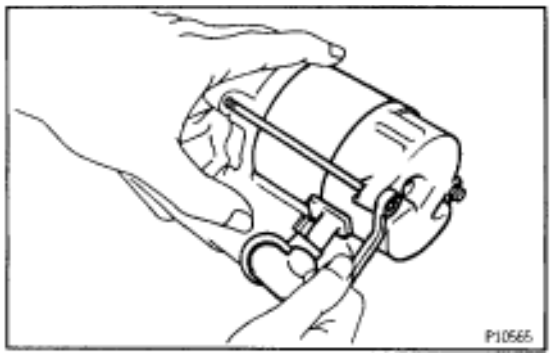

(b) Remove the 2 through bolts.
Torque: 5.9 N·m (60 kgf·cm, 52 in.·lbf)

(c) Pull out the field frame together with the armature.

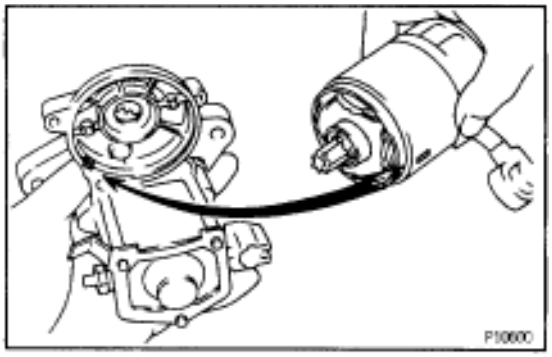

ASSEMBLY HINT: Align the protrusion of the field frame with the groove of the magnetic switch.

(d) Remove the O–ring from the field frame.
ASSEMBLY HINT: Use a new O–ring.

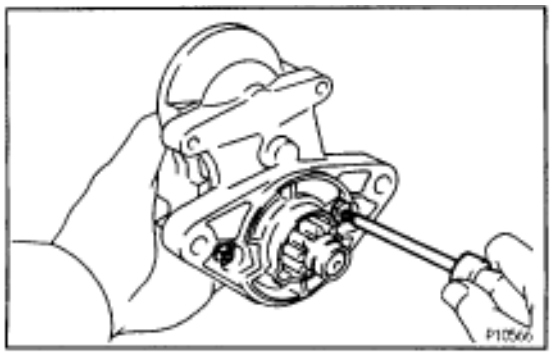

3. REMOVE STARTER HOUSING, CLUTCH ASSEMBLY AND GEAR

(a) Remove the 2 bolts.
Torque: 5.9 N·m (60 kgf·cm, 52 in.·lbf)

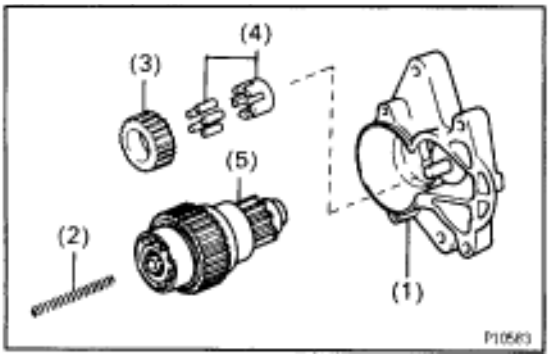

(b) Remove these parts from the magnetic switch:
(1) Starter housing
(2) Return spring
(3) Idler gear
(4) Bearing
(5) Clutch assembly

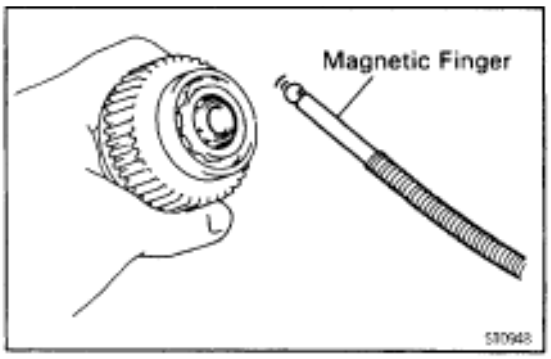

4. REMOVE STEEL BALL

Using a magnetic finger, remove the steel ball from the clutch shaft hole.

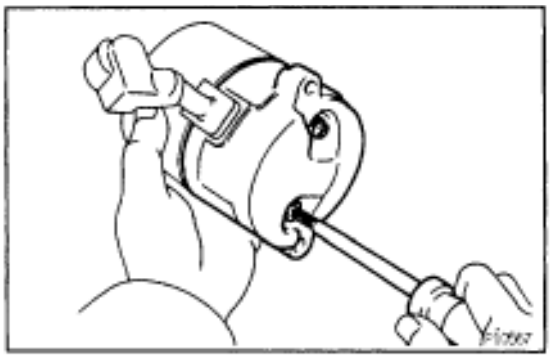

5. REMOVE BRUSH HOLDER

(a) Remove the 2 screws, 2 O–rings and end cover from the field frame.
ASSEMBLY HINT: Use 2 new O–rings.
Torque: 1.5 N·m (15 kgf·cm, 13 in.·lbf)

(b) Remove the O–ring from the field frame.
ASSEMBLY HINT: Use a new O–ring.

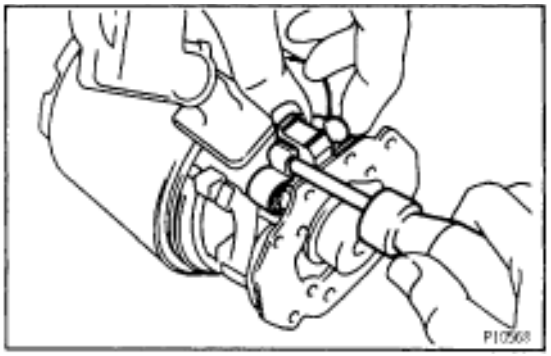

(c) Using a screwdriver, hold the spring back and disconnect the brush from the brush holder. Disconnect the 4 brushes, and remove the brush holder.
ASSEMBLY NOTICE: Check that the positive (+) lead wires are not grounded.

6. REMOVE ARMATURE FROM FIELD FRAME

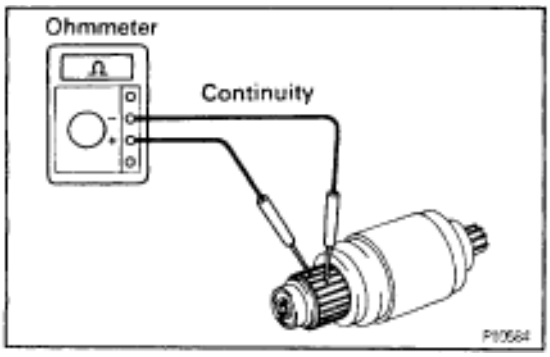

STARTER INSPECTION AND REPAIR

Armature Coil

1. INSPECT COMMUTATOR FOR OPEN CIRCUIT

Using an ohmmeter, check that there is continuity between the segments of the commutator.
If there is no continuity between any segment, replace the armature.

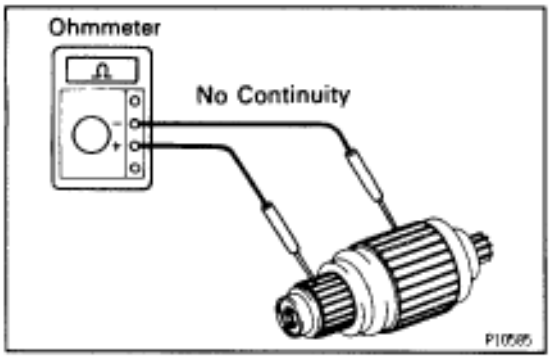

2. INSPECT COMMUTATOR FOR GROUND

Using an ohmmeter, check that there is no continuity between the commutator and armature coil core.

If there is continuity, replace the armature.

Commutator

1. INSPECT COMMUTATOR FOR DIRTY AND BURNT SURFACE

If the surface is dirty or burnt, correct it with sandpaper (No.400) or on a lathe.

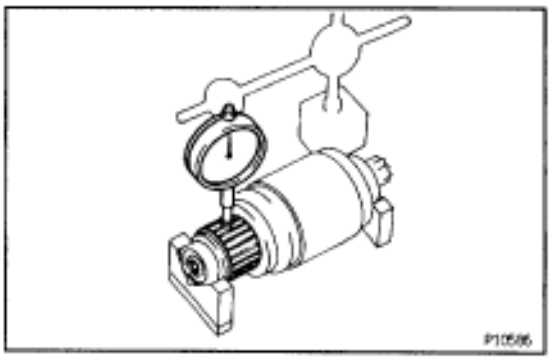

2. INSPECT COMMUTATOR CIRCLE RUNOUT

(a) Place the commutator on V–blocks.

(b) Using a dial gauge, measure the circle runout.

Maximum circle runout:

0.05 mm (0.0020 in.)

If the circle runout is greater than maximum, correct it on a lathe.

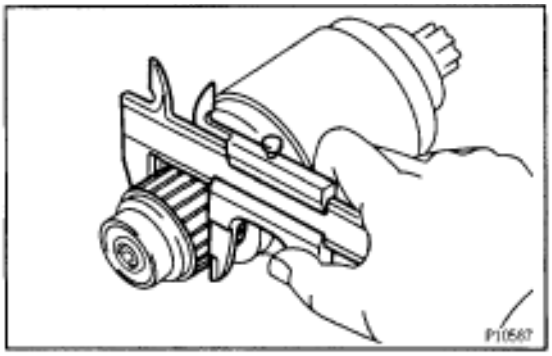

3. INSPECT COMMUTATOR DIAMETER

Using a vernier caliper, measure the commutator diameter.

Standard diameter:

30.0 mm (1.181 in.)

Minimum diameter:

29.0 mm (1.412 in.)

If the diameter is less than minimum, replace the armature.

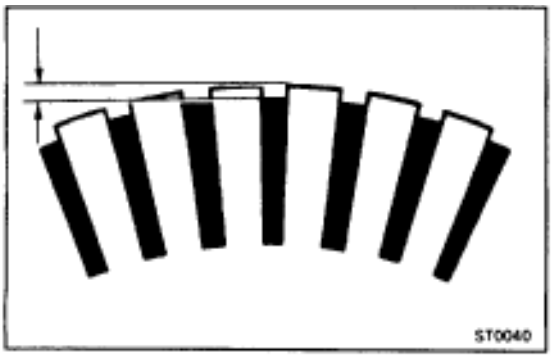

4. INSPECT UNDERCUT DEPTH

Check that the undercut depth is clean and free of foreign materials. Smooth out the edge.

Standard undercut depth:

0.6 mm (0.024 in.)

Minimum undercut depth:

0.2 mm (0.008 in.)

If the undercut depth is less than minimum, correct it with a hacksaw blade.

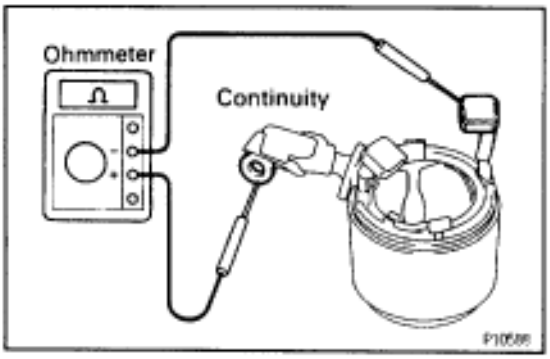

Field Frame (Field Coil)

1. INSPECT FIELD COIL FOR OPEN CIRCUIT

Using an ohmmeter, check that there is continuity between the lead wire and field coil brush lead.

If there is no continuity, replace the field frame.

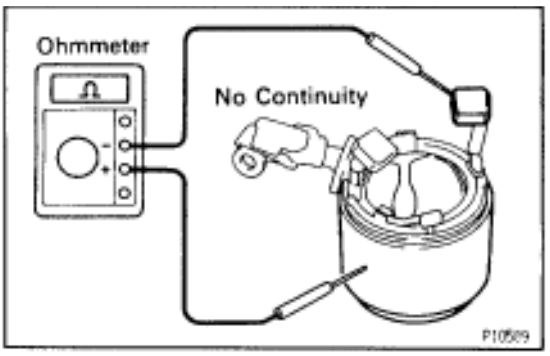

2. INSPECT FIELD COIL FOR GROUND

Using an ohmmeter, check that there is no continuity between the field coil end and field frame.

If there is continuity, replace the field frame.

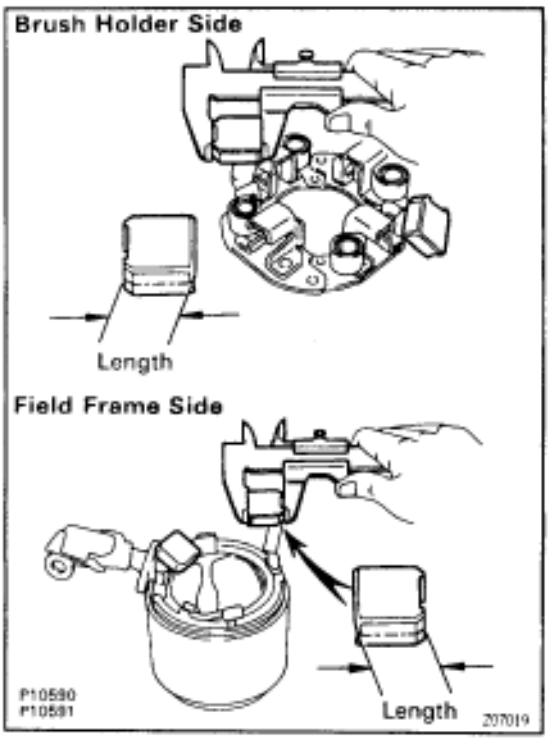

Brushes

INSPECT BRUSH LENGTH

Using a vernier caliper, measure the brush length.

Standard length:

15.5 mm (0.610 in.)

Minimum length:

10.0 mm (0.394 in.)

If the length is less than minimum, replace the brush holder and field frame.

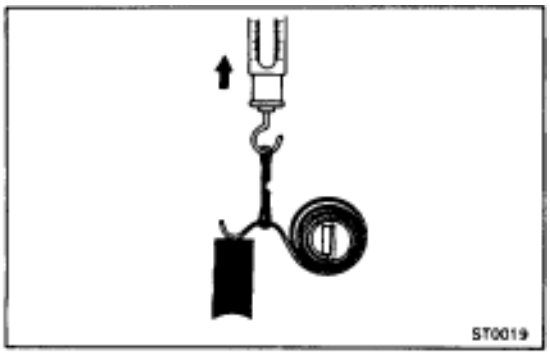

Brush Springs

INSPECT BRUSH SPRING LOAD

Take the pull scale reading the instant the brush spring separates from the brush.

Spring installed load:

18–24 N (1.79–2.41 kgf, 3.9–5.3 lbf)

If the installed load is not within specification, replace the brush springs.

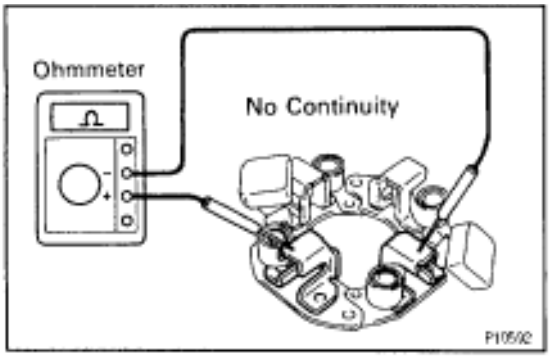

Brush Holder

INSPECT BRUSH HOLDER INSULATION

Using an ohmmeter, check that there is no continuity between the positive (+) and negative (–) brush holders.

If there is continuity, repair or replace the brush holder.

Clutch and Gears

1. INSPECT GEAR TEETH

Check the gear teeth on the pinion gear, idle gear and the clutch assembly for wear or damage.

If damaged, replace the gear or clutch assembly.

If damaged, also check the drive plate ring gear for wear or damage.

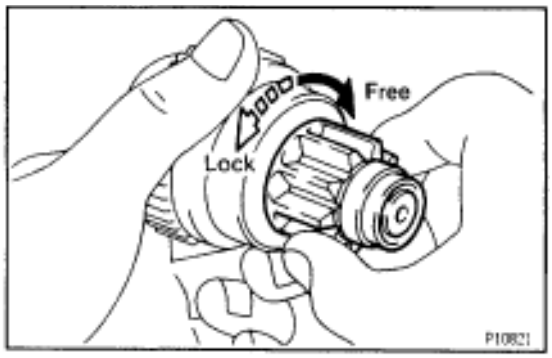

2. INSPECT CLUTCH PINION GEAR

Rotate the pinion gear counterclockwise, and check that it turns freely. Try to rotate the pinion gear clock–wise and check that it locks.

If necessary, replace the clutch assembly.

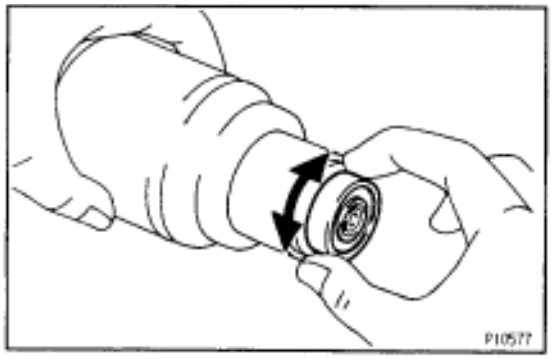

Bearings

1. INSPECT FRONT BEARING

Turn each bearing by hand while applying inward force.

If resistance is felt or the bearing sticks, replace the bearing.

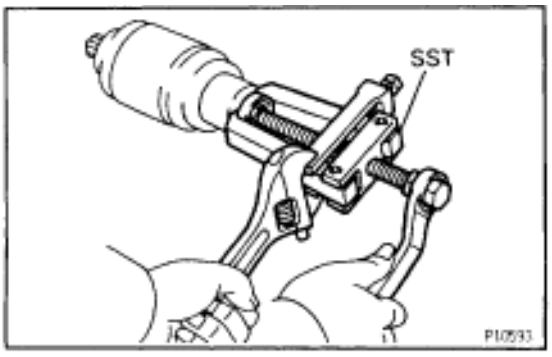

2. IF NECESSARY, REPLACE FRONT BEARING

(a) Using SST, remove the bearing.

SST 09286–46011

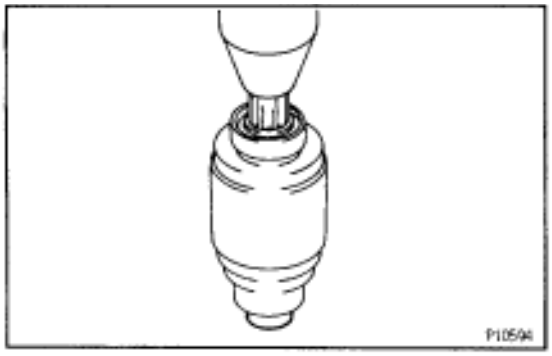

(b) Using a press, press in a new front bearing.

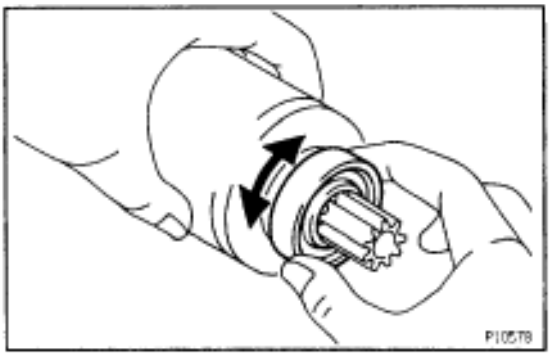

3. INSPECT REAR BEARING

Turn each bearing by hand while applying inward force.
If resistance is felt or the bearing sticks, replace the bearing.

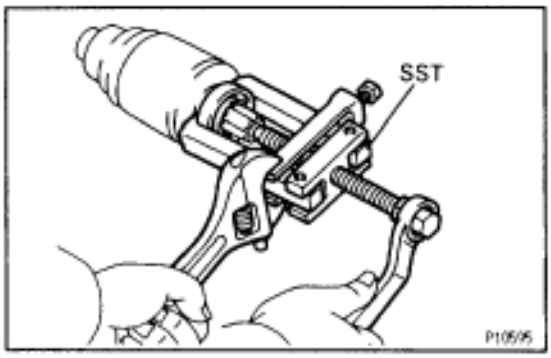

4. IF NECESSARY, REPLACE REAR BEARING

(a) Using SST, remove the bearing.
SST 09286–46011

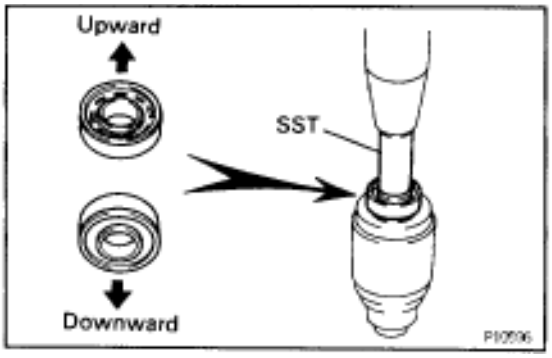

(b) Using SST and a press, press in a new bearing.
NOTICE: Be careful of the bearing installation direction.
SST 09820–00030

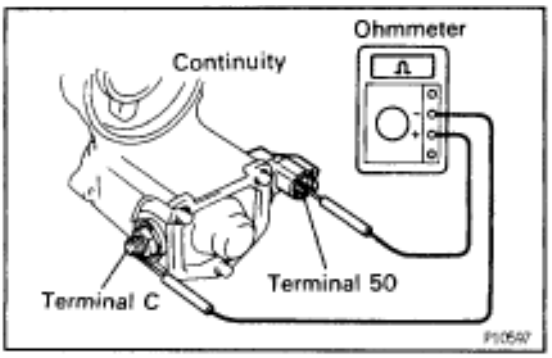

Magnetic Switch

1. DO PULL–IN COIL OPEN CIRCUIT TEST

Using an ohmmeter, check that there is continuity between terminals 50 and C.
If there is no continuity, replace the magnetic switch.

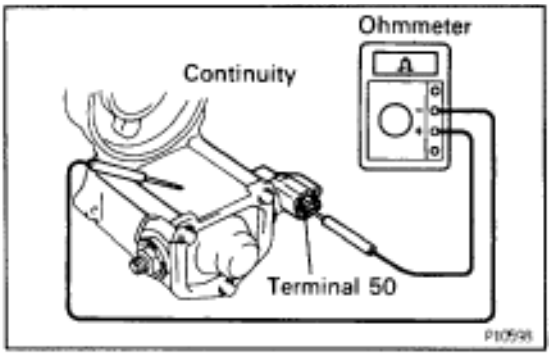

2. DO HOLD–IN COIL OPEN CIRCUIT TEST

Using an ohmmeter, check that there is continuity between terminal 50 and the switch body.

If there is no continuity, replace the magnetic switch.

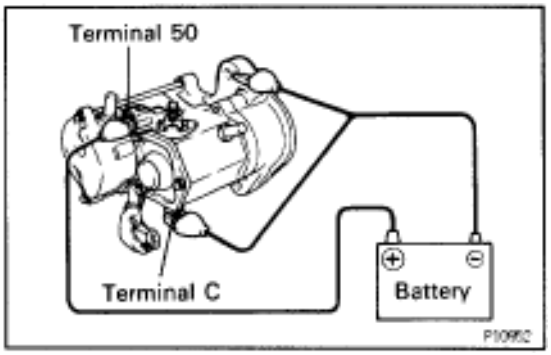

STARTER PERFORMANCE TEST

NOTICE: These tests must be performed with in 3 to 5 seconds to avoid burning out the coil.

1. DO PULL–IN TEST

(a) Disconnect the field coil lead wire from terminal C.

(b) Connect the battery to the magnetic switch as shown.

Check that the pinion gear moves outward.

If the pinion gear does not move, replace the magnetic switch.

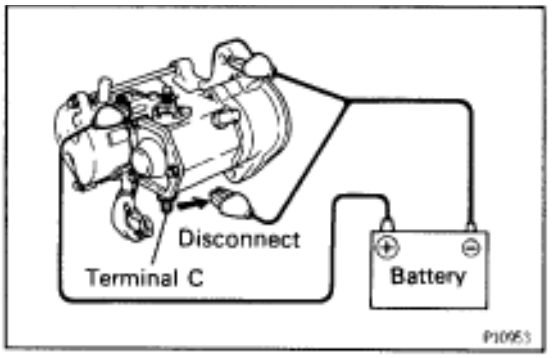

2. DO HOLD–IN TEST

While connected as above with the pinion gear out, disconnect the negative (–) lead from terminal C.

Check that the pinion gear remains out.

If the pinion gear returns inward, replace the magnetic switch.

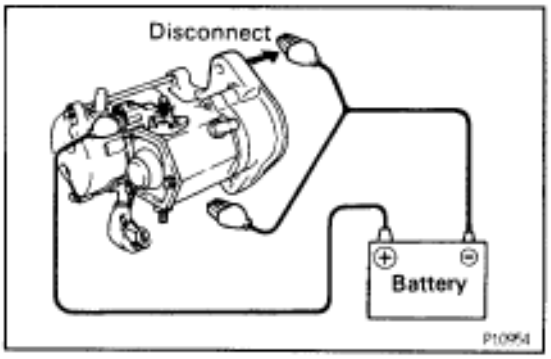

3. INSPECT CLUTCH PINION GEAR RETURN

Disconnect the negative (–) lead from the starter body. Check that the pinion gear returns inward.

If the pinion gear does not return, replace the magnetic switch.

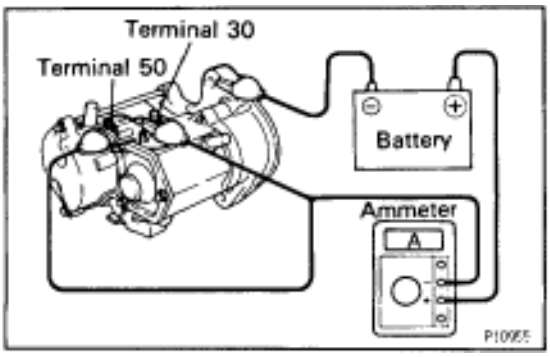

4. DO NO–LOAD PERFORMANCE TEST

(a) Connect the battery and ammeter to the starter as shown.

(b) Check that the starter rotates smoothly and steadily with the pinion gear moving out. Check that the ammeter shows the specified current.

Specified current:

90 A or less at 11.5 V

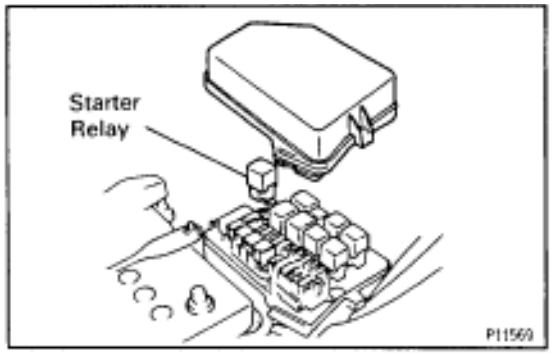

STARTER RELAY

STARTER RELAY INSPECTION

1. REMOVE STARTER RELAY (”ST”)

LOCATION: In the engine compartment relay box.
Remove the relay box cover and starter relay.

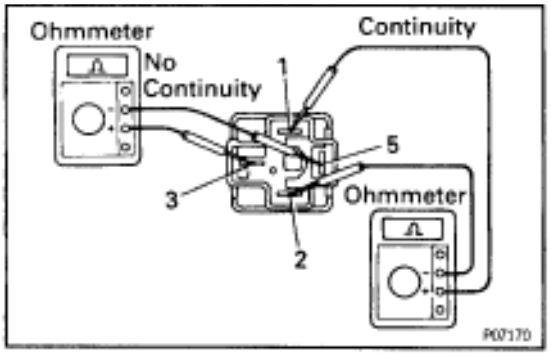

2. INSPECT STARTER RELAY

A. Inspect relay continuity

(a) Using an ohmmeter, check that there is continuity between terminals 1 and 2.

(b) Check that there is no continuity between terminals 3 and 5.
If continuity is not as specified, replace the relay.

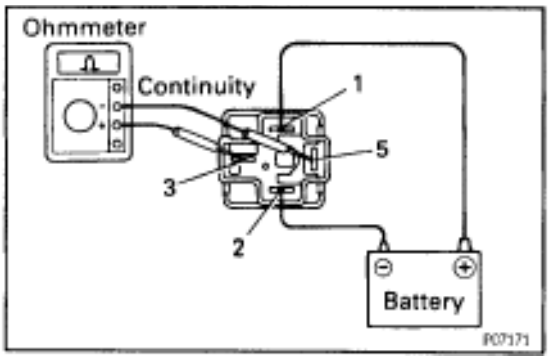

B. Inspect relay operation

(a) Apply battery voltage across terminals 1 and 2.

(b) Using an ohmmeter, check that there is continuity between terminals 2 and 5.
If operation is not as specified, replace the relay.

3. REINSTALL STARTER RELAY

SERVICE SPECIFICATIONS

SERVICE DATA

Starter	Rated voltage and output power		12 V 1.4 kW
	No–load characteristics	Current	90 A or less at 11.5 V
		rpm	3,000 rpm or more
	Brush length	STD	15.5 mm (0.610 in.)
		Minimum	10.0 mm (0.394 in.)
	Spring installed load		18–24 N (1.79–2.41 kgf, 3.9–5.3 lbf)
	Commutator		
	Diameter	STD	30.0 mm (1.181 in.)
		Minimum	29.0 mm (1.412 in.)
	Undercut depth	STD	0.6 mm (0.024 in.)
		Minimum	0.2 mm (0.008 in.)
	Circle runout	Maximum	0.05 mm (0.0020 in.)

TORQUE SPECIFICATIONS

Part tightened	N·m	kgf·cm	ft·lbf
End cover X Brush holder	1.5	15	13 in.·lbf
Starter housing X Magnetic switch	5.9	60	52 in.·lbf
End cover X Starter housing	5.9	60	52 in.·lbf
Lead wire of field frame X Magnetic switch	7.9	81	70 in.·lbf
Starter X Clutch housing	39	400	29

STEERING

PRECAUTION

- **Care must be taken to replace parts properly because they could affect the performance of the steering system and result in a driving hazard.**
- **The steering wheel pad has an SRS (Supplemental Restraint System) airbag built in, so take all due precautions when handling it. For more details, see the RS section.**

TROUBLESHOOTING

Use the table below to help you find the cause of the problem. The numbers indicate the priority of the likely cause of the problem. Check each part in order. If necessary, repair or replace these parts.

See page / Parts Name / Trouble	Tires (improperly inflated)	Front wheel alignment (Incorrect)	Fluid level (Low)	Drive belt (Loose)	Steering system joints (Worn)	Suspension arm ball joints (Worn)	Steering column (Binding)	Sliding yoke (Worn)	Steering gear housing	Solenoid valve	Electronic control	Front wheel bearing (Worn)
See page	SA–3	SA–4	SR–7	–	–	SA–27 SA–30	–	–	–	SR–49	SR–47	SA–16
Hard steering	1	4	2	3	5	6	7		10	8	9	
Poor return	1	2					3		4			
Excessive play					1	2		3	5			4
Abnormal noise			1		2				3			

PREPARATION

SST (SPECIAL SERVICE TOOLS)

	09608–30012	Front Hub & Drive Pinion Bearing Tool Set	
	(09608–04030)	Front Hub Inner Bearing Cone Replacer	Vane pump shaft
	09612–00012	Rack & Pinion Steering Rack Housing Stand	
	09612–30012	Steering Worm Bearing Puller	Rack housing bearing and oil seal
	09616–00010	Steering worm Bearing Adjusting Socket	Control Valve Shaft
	09620–30010	Steering Gear Box Replacer Set	
	(09624–30010)	Steering Sector Shaft Oil Seal Replacer	Rack housing oil seal
	(09626–30010)	Steering Worm Front Bearing Replacer	Rack housing bearing
	(09627–30010)	Steering Sector Shaft Bushing Replacer	Cylinder end stopper
	(09631–00020)	Handle	
	09630–24013	Steering Rack Oil Seal Tool Set	
	(09620–24010)	Valve Cup Oil Seal Remover	Control valve housing oil seal and bearing
	(09620–24020)	Valve Cup Oil Seal Replacer	Control valve housing oil seal

	(09620–24030) Valve Cup Bearing Replacer	Control valve housing bearing
	09631–10030 Oil Seal Remover	Vane pump front housing oil seal
	09631–12020 Handle	
	09631–12071 Steering Rack Oil Seal Test Tool	
	09631–20031 Oil Seal “B” Remover	Rack housing oil seal and spacer
	09631–20081 Seal Ring Tool	Control valve teflon rings
	09631–20102 Steering Rack Cover “H”	
	09631–22070 Oil Seal Replacer	Rack housing oil seal
	09631–32020 Seal Ring Tool	Hydraulic reaction chamber teflon rings
	09633–00020 Power Steering Hose Nut Wrench	
	09910–00015 Puller Set	
	(09911–00011) Puller Clamp	Tilt No.2 bolt
	(09912–00010) Puller Slide Hammer	Tilt No.2 bolt
	09922–10010) Variable Open Wrench	

	09950–40010 Puller B Set	
	(09957–04010) Attachment	Main shaft assembly
	(09958–04010) Holder	Main shaft assembly
	09950–50010 Puller C Set	
	(09951–05010) Hanger 150	
	(09952–05010) Slide Arm	
	(09953–05020) Center Bolt 150	
	(09954–05020) Claw No.2	
	09960–10010 Variable Pin Wrench Set	Vane pump pulley

RECOMMENDED TOOLS

	09025–00010 Torque Wrench (30 kgf⊕cm) ◆	Total preload
	09042–00010 Torx Socket T30 ◆	Steering wheel pad Compression spring
	09082–00050 TOYOTA Electrical Tester Set ◆	
	09905–00012 Snap Ring No.1 Expander ◆	

	09905–00013 Snap ring Pliers ◆	

LUBRICANT

Item	Capacity	Classification
Power steering fluid Total	1.0 liters (1.1 US qts, 0.9 Imp.qts)	ATF DEXRON® II

EQUIPMENT

Caliper gauge	PS vane pump
Dial indicator	Steering rack
Feeler gauge	Rotor and vane plate
Micrometer	PS vane pump
Oil pressure gauge	
Pull scale	Steering effort
Torque wrench	
Vacuum gauge	Gear housing

SSM (SPECIAL SERVICE MATERIALS)

	08833–00080 Adhesive 1344, THREE BOND 1344, LOCTITE 242 or equivalent	Rack housing cap rack guide spring cap Rack guide spring cap lock nut

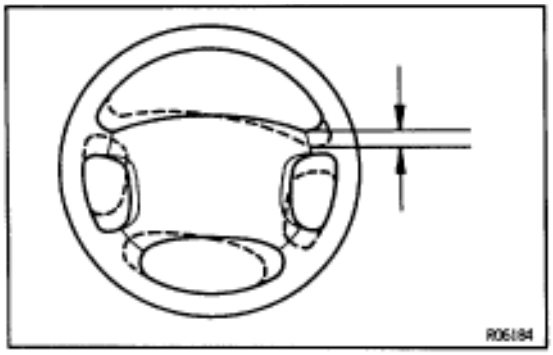

ON–VEHICLE INSPECTION

STEERING WHEEL FREEPLAY CHECK

With the vehicle stopped and tires pointed straight ahead, rock the steering wheel gently back and forth with light finger pressure.

Freeplay should not exceed the maximum.

	Freeplay mm(in.)
Maximum	30 (1.18)

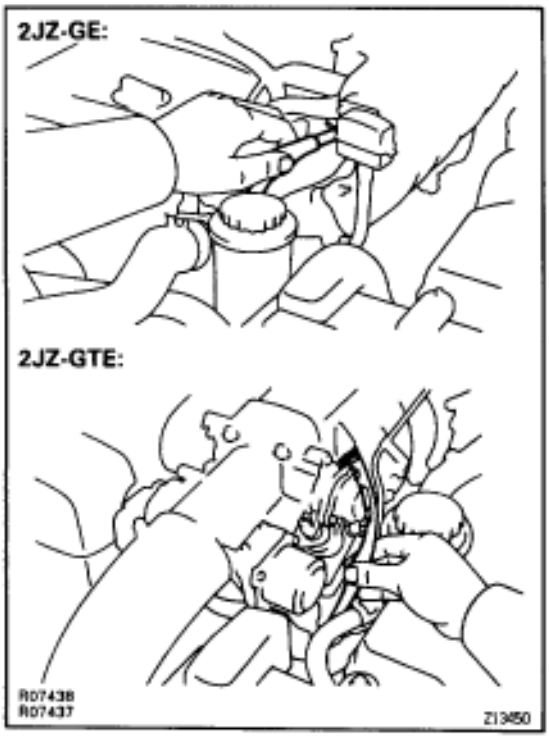

IDLE–UP CHECK

1. TURN AIR CONDITIONING SWITCH OFF

2. CHECK IDLE–UP

(a) Start engine and run it at idle.

(b) Fully turn the steering wheel.

(c) Check that the engine speed decreases when the air control valve hose is pinched.

(d) Check that the engine speed increases when the hose is released.

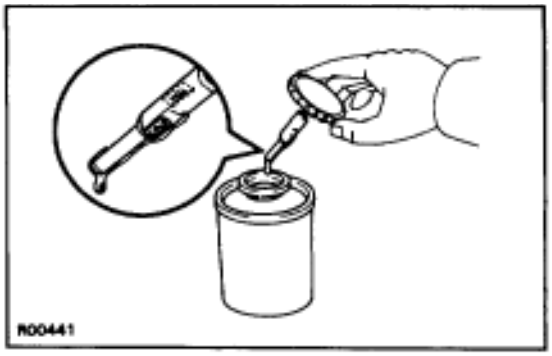

FLUID LEVEL CHECK

1. KEEP VEHICLE LEVEL

2. CHECK FLUID LEVEL

Check the fluid level in the reservoir.

If necessary, add fluid.

Fluid:

ATF DEXRON® II

HINT: Check that the fluid level is within the HOT LEVEL range on the dipstick of the reservoir cap. If the fluid is cold, check that it is within the COLD LEVEL range.

3. BOOST FLUID TEMPERATURE

(a) Start the engine and run it at idle.

(b) Turn the steering wheel from lock to lock several times to boost fluid temperature.

Fluid temperature:

80°C (176°F)

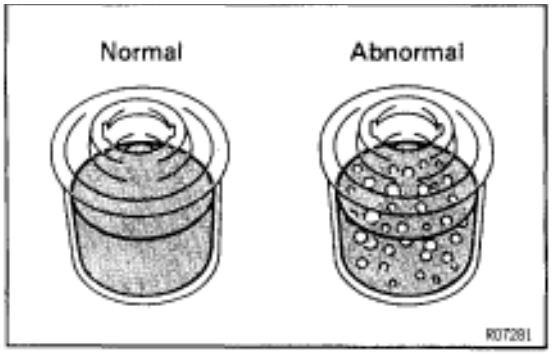

4. CHECK FOR FOAMING OR EMULSIFICATION

If there is foaming or emulsification, bleed power steering system.
(See page SR–9)

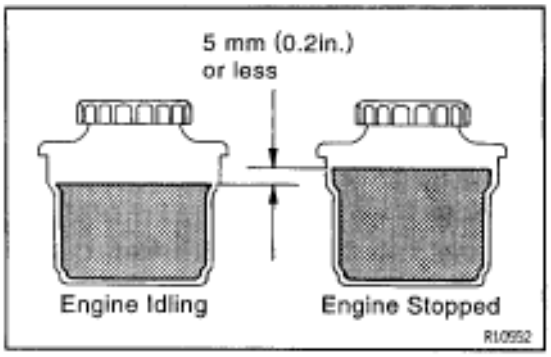

5. CHECK FLUID LEVEL RISE

(a) With the engine idling, measure the fluid level in the reservoir.
(b) Stop the engine.
(c) Wait a few minutes and remeasure the fluid level in the reservoir.

	Fluid level rise mm (in.)
Maximum	5 (0.2)

If a problem is found, bleed power steering system.
(See page SR–9)

6. CHECK FLUID LEVEL

POWER STEERING FLUID REPLACEMENT

1. JACK UP FRONT OF VEHICLE AND SUPPORT IT WITH STANDS

2. DRAIN FLUID

(a) Disconnect the return hose from the PS vane pump.
(b) Turn the steering wheel from lock to lock.

3. FILL OIL RESERVOIR

(a) Fill oil reservoir with fresh fluid.

Fluid:

ATF DEXRON® II

(b) Start engine.
(c) After 1 or 2 seconds, fluid will begin to discharge from the return hose.
(d) Stop the engine immediately.

NOTICE: Take care that some fluid remains in the oil reservoir.

(e) Repeat steps (a), (b), (c) and (d) until there is no more air in fluid.
(f) Connect the return hose.

4. BLEED POWER STEERING SYSTEM

(See page SR–9)

POWER STEERING SYSTEM BLEEDING

1. JACK UP FRONT OF VEHICLE AND SUPPORT IT WITH STANDS

2. TURN STEERING WHEEL

With the engine stopped, turn the steering slowly from lock to lock several times.

NOTICE: Take care that some fluid remains in the oil reservoir.

3. LOWER VEHICLE

4. START ENGINE

Run the engine at idle for a few minutes.

5. TURN STEERING WHEEL

(a) With the engine at idling, turn the wheel to left or right full lock and keep it there for 2–3 seconds, then turn the wheel to the opposite full lock and keep it there for 2–3 seconds.

(b) Repeat (a) several times.

6. STOP ENGINE

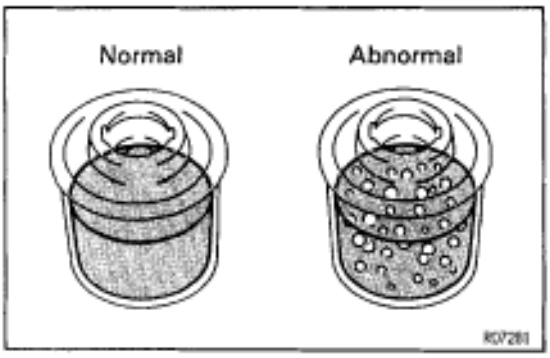

7. CHECK FOR FOAMING OR EMULSIFICATION

If the system has to be bled twice specifically because of foaming or emulsification, check for fluid leaks in the system.

8. CHECK FLUID LEVEL

(See page SR–7)

FLUID PRESSURE CHECK

1. CONNECT OIL PRESSURE GAUGE

(a) Disconnect the pressure feed tube from the PS vane pump. (See page SR–26)

(b) Connect the gauge over a new gasket, as shown below.
NOTICE: Check that the valve of the gauge is in the open position.

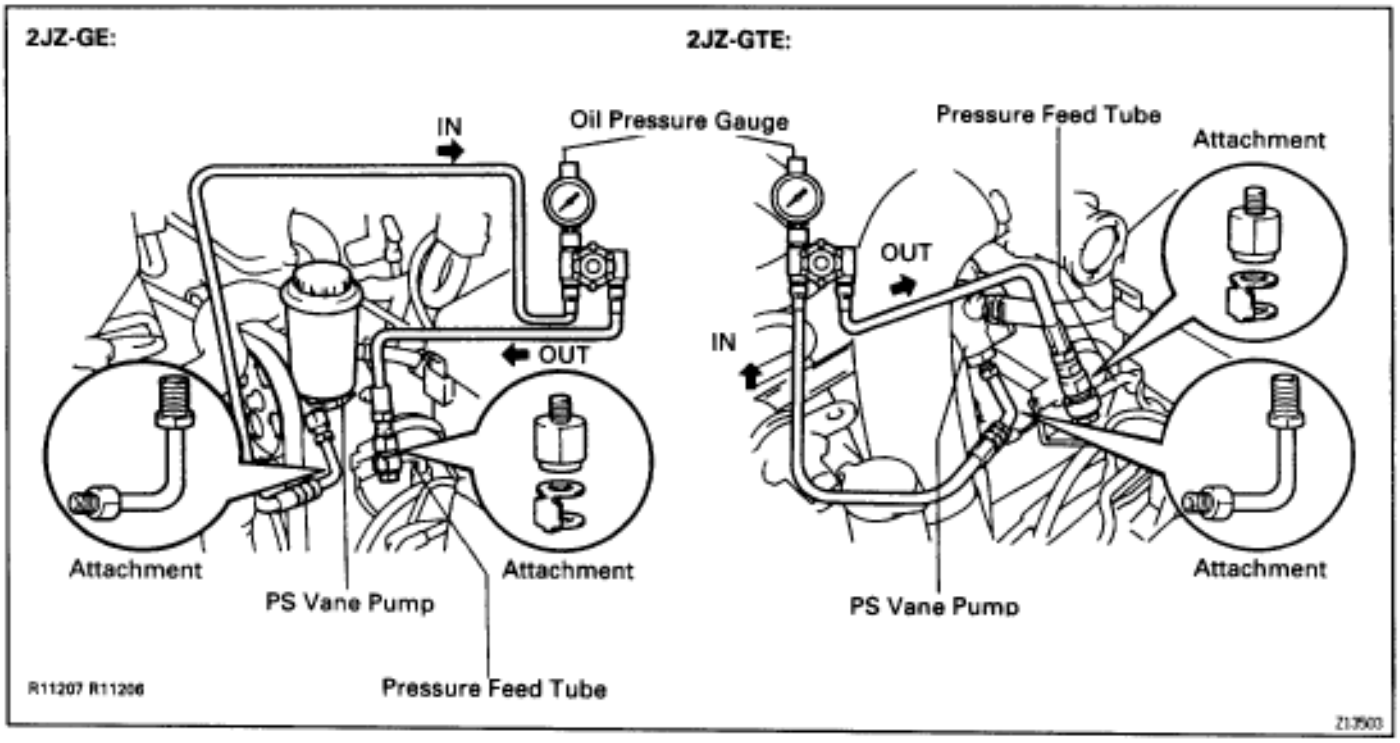

2. BLEED POWER STEERING SYSTEM
(See page SR–9)

3. BOOST FLUID TEMPERATURE

(a) Start the engine and run it at idle.

(b) Turn the steering wheel from lock to lock several times to boost fluid temperature.
Fluid temperature:
80°C (176°F)

4. CHECK FLUID PRESSURE READING WITH VALVE CLOSED

With the engine idling, close the oil pressure gauge valve and observe the reading on the gauge.

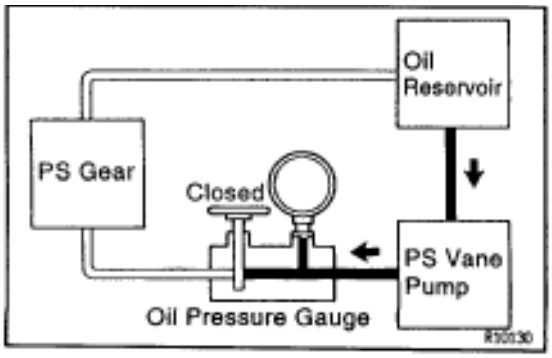

	Fluid pressure kPa (kgf/cm^2, psi)
Minimum	7,355 (75, 1,067)

NOTICE:

- **Do not keep the valve closed for more than 10 seconds.**
- **Do not let the fluid temperature become too high.**

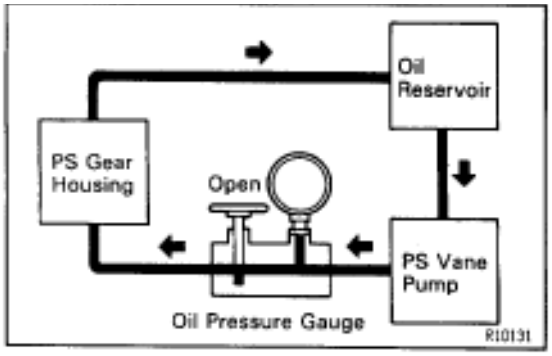

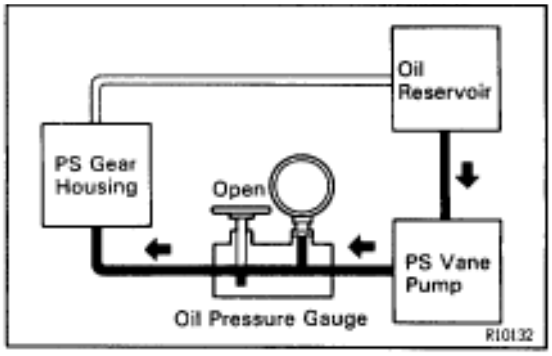

5. CHECK FLUID PRESSURE READING WITH VALVE OPENED

(a) With the engine idling, open the valve fully.

(b) Measure the fluid pressure at engine speeds of 1,000 rpm and 3,000 rpm.

	Fluid pressure kPa (kgf/cm^2, psi)
Difference	490 (5, 71) or less

NOTICE: Do not turn the steering wheel.

6. CHECK FLUID PRESSURE READING WITH STEERING WHEEL TURNED TO FULL LOCK

With the engine idling and valve fully opened, turn the wheel to full lock.

	Fluid pressure kPa (kgf/cm^2, psi)
Minimum	7,355 (75, 1,067)

NOTICE:

- **Do not maintain lock position for more than 10 seconds.**
- **Do not let the fluid temperature become too high.**

7. DISCONNECT OIL PRESSURE GAUGE

(a) Disconnect the pressure gauge.

(b) Connect the pressure feed tube.
(See page SR–32)

8. BLEED POWER STEERING SYSTEM
(See page SR–9)

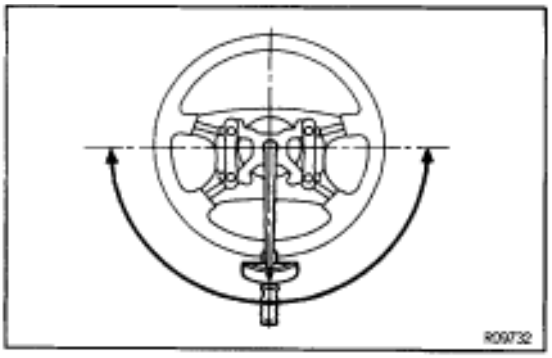

STEERING EFFORT MEASUREMENT

1. CENTER STEERING WHEEL

2. MEASURE STEERING EFFORT

(a) Remove the steering wheel pad.
(See page SR–14)

(b) Start the engine and run it at idle.

(c) Measure the steering effort in both directions.
Maximum steering effort:
6.9 N·m (70 kgf·cm, 61 in.·lbf)
If steering effort is excessive, repair the power steering unit.
HINT: Be sure to consider the tire type, pressure and contact surface before making your diagnosis.

(d) Tighten the steering wheel set nut.
Torque: 35 N·m (360 kgf·cm, 26 ft·lbf)

(e) Install the steering wheel pad.
(See page SR–22)

TILT STEERING COLUMN

COMPONENTS

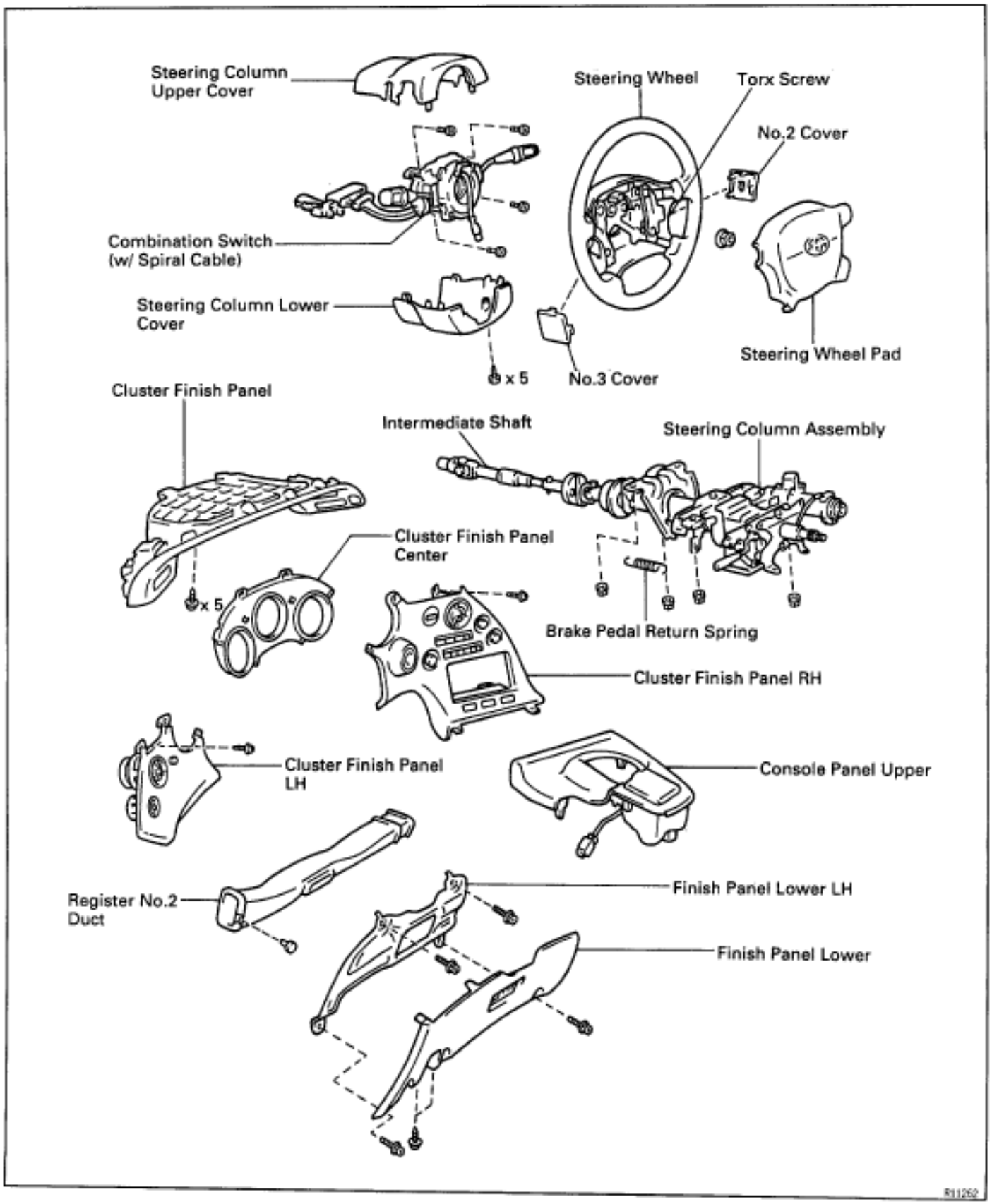

COMPONENTS

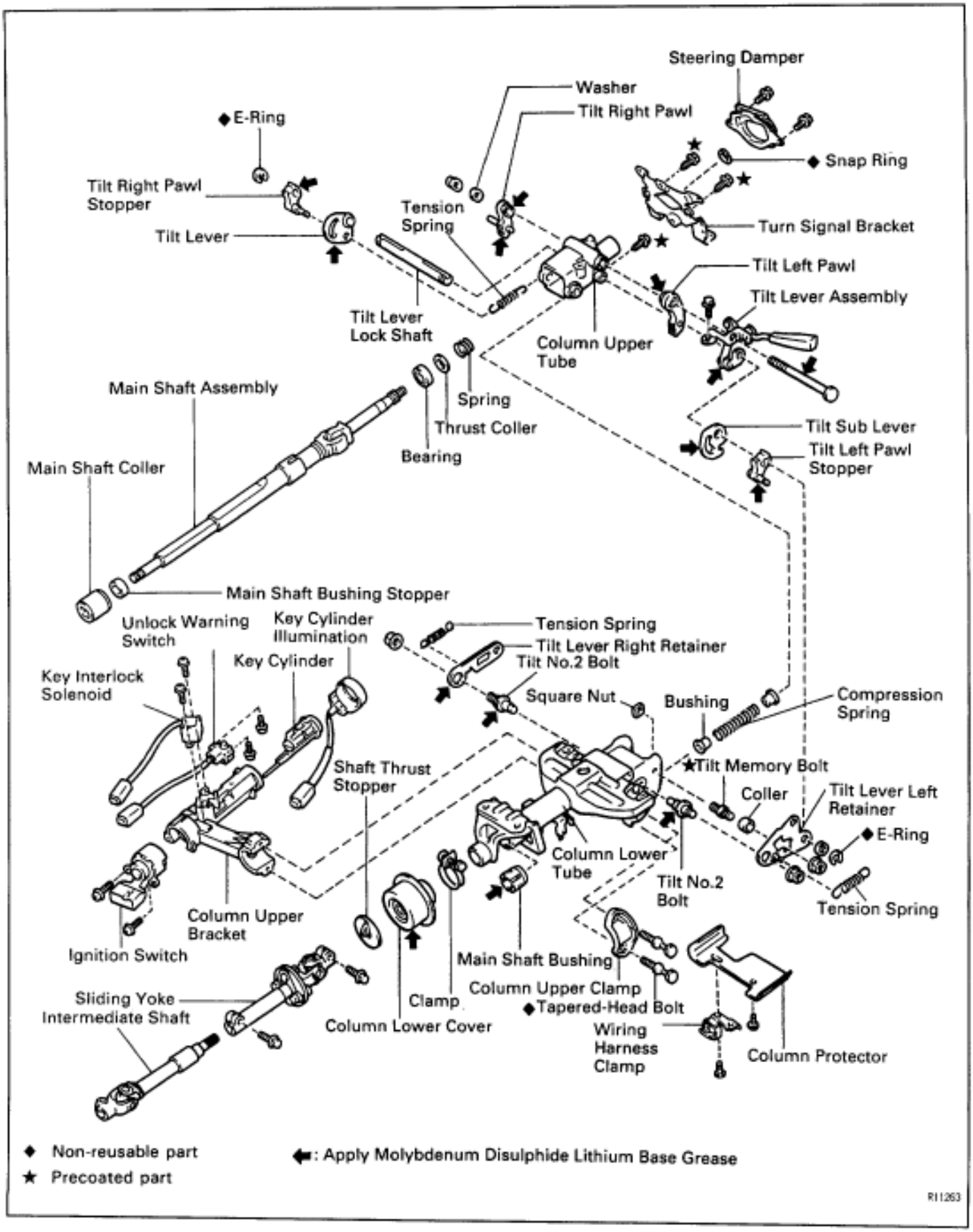
Steering Damper
Washer
Tilt Right Pawl
◆E-Ring
◆Snap Ring
Tilt Right Pawl Stopper
Tension Spring
Tilt Lever
Turn Signal Bracket
Tilt Left Pawl
Tilt Lever Assembly
Tilt Lever Lock Shaft
Column Upper Tube
Main Shaft Assembly
Spring
Thrust Coller
Bearing
Tilt Sub Lever
Tilt Left Pawl Stopper
Main Shaft Coller
Main Shaft Bushing Stopper
Unlock Warning Switch
Key Cylinder Illumination
Key Cylinder
Tension Spring
Tilt Lever Right Retainer
Tilt No.2 Bolt
Key Interlock Solenoid
Square Nut
Bushing
Compression Spring
★Tilt Memory Bolt
Shaft Thrust Stopper
Coller
Tilt Lever Left Retainer
◆E-Ring
Column Lower Tube
Tilt No.2 Bolt
Tension Spring
Column Upper Bracket
Ignition Switch
Main Shaft Bushing
Column Upper Clamp
◆Tapered-Head Bolt
Sliding Yoke
Intermediate Shaft
Clamp
Column Lower Cover
Wiring Harness Clamp
Column Protector
◆ Non-reusable part
★ Precoated part
⬅: Apply Molybdenum Disulphide Lithium Base Grease
RI1263

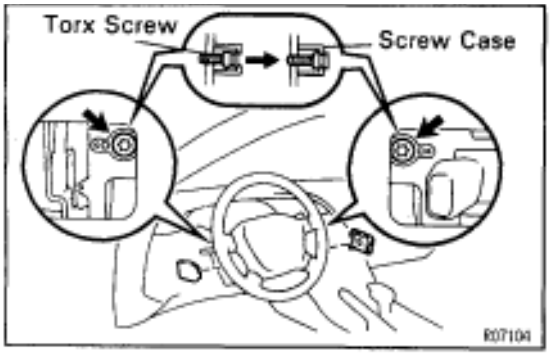

STEERING COLUMN REMOVAL

1. REMOVE STEERING WHEEL PAD

(a) Place the front wheels facing straight ahead.

(b) Remove the No.2 and No.3 covers.

(c) Using a torx socket wrench, loosen the 3 torx screws.
HINT: Loosen the 3 screws until the groove along the screw circumference catches on the screw case.

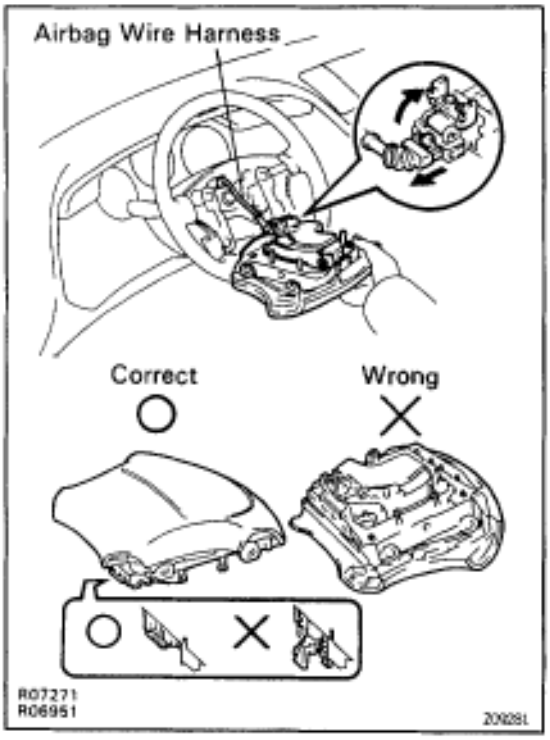

(d) Pull the pad out from the steering wheel and disconnect the airbag connector.
NOTICE: When removing the pad, take care not to pull the airbag wire harness.
CAUTION:
- **When storing the pad, keep the upper surface of the pad facing upward.**
- **Never disassemble the pad.**

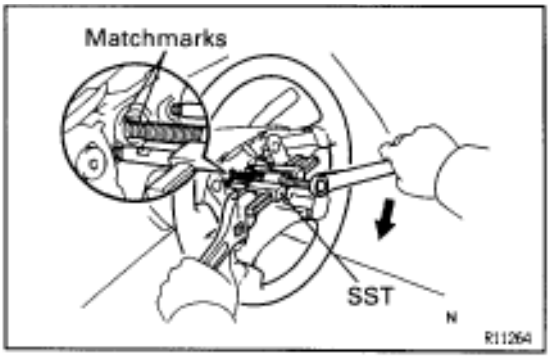

2. REMOVE STEERING WHEEL

(a) Disconnect the connector.

(b) Remove the wheel set nut.

(c) Place matchmarks on the wheel and main shaft.

(d) Using SST, remove the wheel.
SST 09950–50010 (09951–05010, 09952–05010, 09953–05020, 09954–05020)

3. REMOVE UPPER AND LOWER COLUMN COVERS
Remove 5 screws.

4. REMOVE THESE PARTS:
(See page BO–45**)**

(a) Console panel upper

(b) Cluster finish panel

(c) Cluster finish panel RH

(d) Cluster finish panel LH

(e) Cluster finish panel center

(f) Finish panel lower

(g) Finish panel lower LH

(h) Register No.2 duct

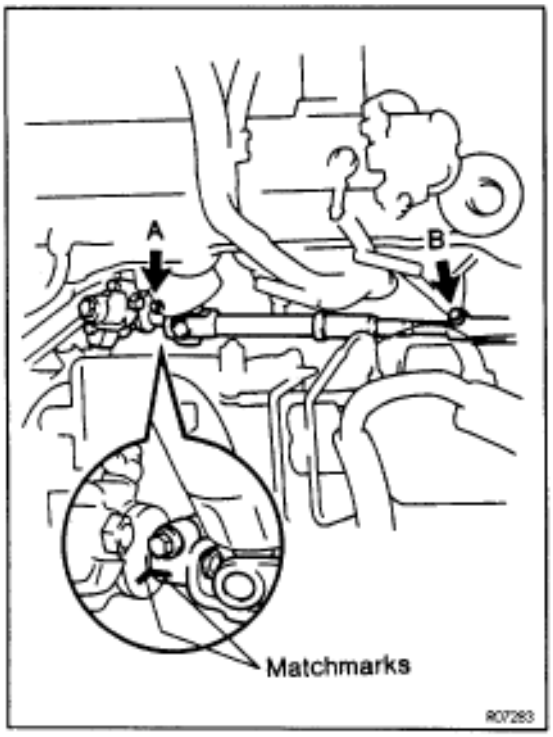

5. REMOVE COMBINATION SWITCH

(a) Remove the 4 screws.

(b) Disconnect the 4 connectors and airbag connector.

6. DISCONNECT INTERMEDIATE SHAFT

(a) Place matchmarks on the intermediate shaft and control valve shaft.

(b) Loosen the bolt B and remove the bolt A.

7. REMOVE STEERING COLUMN ASSEMBLY

(a) Remove the brake pedal return spring.

(b) Loosen the hole cover clamp.

(c) Remove the 4 nuts.

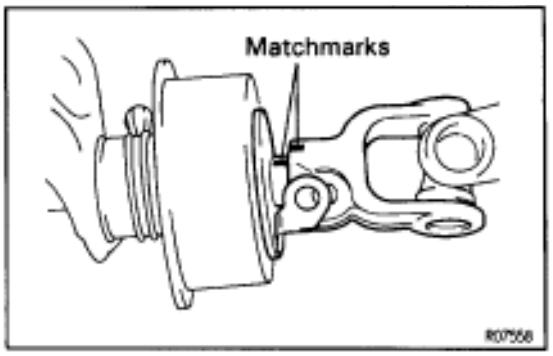

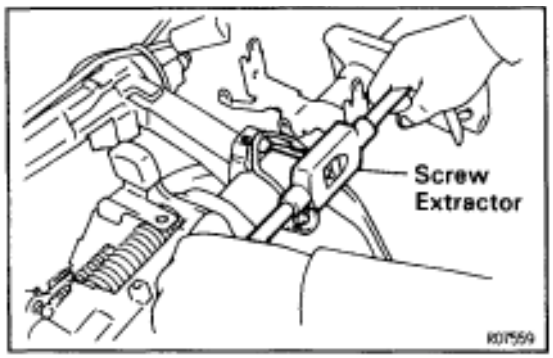

STEERING COLUMN DISASSEMBLY

NOTICE: When using a vise, do not overtighten it.

1. REMOVE IGNITION KEY CYLINDER ILLUMINATION

2. REMOVE INTERMEDIATE SHAFT

Remove the bolt.

3. REMOVE SLIDING YOKE AND SHAFT THRUST STOPPER

(a) Remove the bolt.

(b) Shift the stopper.

(c) Place matchmarks on the yoke and main shaft.

4. REMOVE COLUMN LOWER COVER

Loosen the clamp.

5. REMOVE COLUMN UPPER BRACKET

(a) Using a centering punch, mark the center of the 2 tapered–head bolts.

(b) Using a 4–5 mm (0.16–0.20 in.) drill, drill into the 2 tapered–head bolts.

(c) Using a screw extractor, remove the 2 tapered–head bolts.

(d) Remove the bracket and column upper clamp.

6. REMOVE WIRING HARNESS CLAMP AND COLUMN PROTECTOR

7. REMOVE COMPRESSION SPRING

(a) Using a torx socket wrench, remove the screw.

(b) Remove the 2 bushings from the spring.

8. REMOVE 3 TENSION SPRINGS

9. REMOVE TURN SIGNAL BRACKET

Remove the 2 bolts.

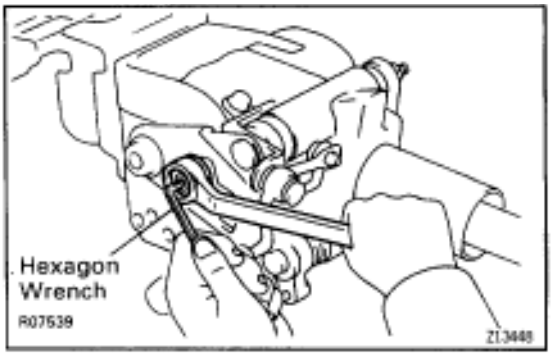

10. REMOVE TILT LEVER RIGHT RETAINER

Remove the nut and E–ring.

11. REMOVE TILT LEVER LEFT RETAINER

(a) Using a hexagon wrench (4 mm) to hold the tilt memory bolt, remove the nut.
(b) Remove the nut, washer and bolt.
(c) Remove the nut, E–ring and spacer.
(d) Remove the collar.

12. REMOVE TILT RIGHT PAWL, TILT RIGHT PAWL STOPPER AND TILT LEVER

13. REMOVE TILT LEFT PAWL, TILT LEFT PAWL STOPPER, TILT SUB LEVER, TILT LEVER ASSEMBLY AND TILT LEVER LOCK SHAFT

Remove the tilt lever set screw.

14. REMOVE TILT MEMORY BOLT AND SQUARE NUT

Using a hexagon wrench (4 mm), remove the bolt.

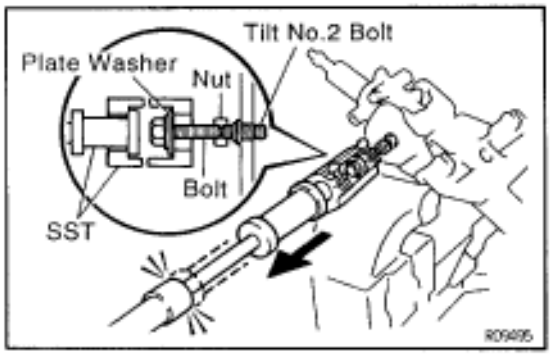

15. REMOVE MAIN SHAFT ASSEMBLY WITH COLUMN UPPER TUBE

(a) Set SST, the nut (10 mm nominal diameter, 1.25 mm pitch), plate washer (36 mm outer diameter) and bolt (10 mm nominal diameter, 1.25 mm pitch, 50 mm length), as shown.
SST 09910–00015 (09911–00011, 09912–00010)
Reference:

Nut	90170–10004
Plate washer	90201–10201
Bolt	91111–51050

(b) Remove the 2 tilt No.2 bolts by using the sliding hammer on SST.
(c) Remove the shaft assembly with the upper tube from the column lower tube.

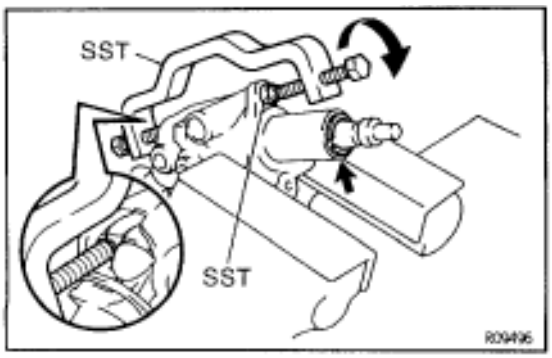

16. REMOVE MAIN SHAFT ASSEMBLY

(a) Using SST, compress the compression spring.
SST 09950–40010 (09957–04010, 09958–04010)
(b) Using snap ring pliers, remove the snap ring.
(c) Remove the main shaft assembly from the upper tube.
(d) Remove the spring, bearing thrust collar and bearing from the main shaft.

17. REMOVE MAIN SHAFT COLLAR AND MAIN SHAFT BUSHING STOPPER

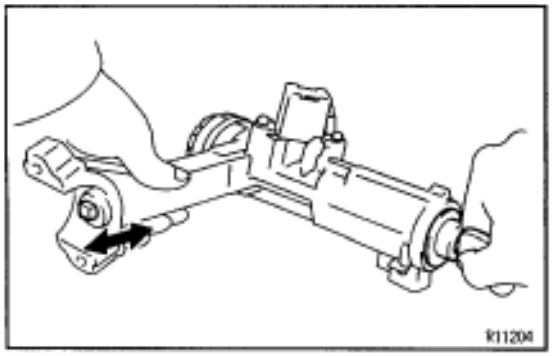

STEERING COLUMN INSPECTION AND REPLACEMENT

1. INSPECT KEY CYLINDER

Check that the steering lock mechanism operates properly.

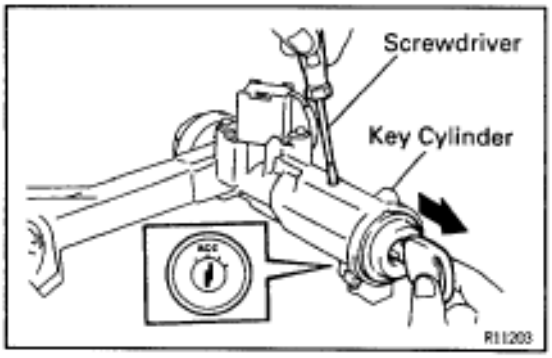

2. IF NECESSARY, REPLACE KEY CYLINDER

(a) Place the ignition key at the ACC position.

(b) Push down the stop pin with a screwdriver and pull out the key cylinder.

(c) Install a new cylinder.

HINT: Make sure the ignition key is at the ACC position.

3. IF NECESSARY, REPLACE UNLOCK WARNING SWITCH AND IGNITION SWITCH

(a) Remove the 2 screws and warning switch.

(b) Remove the 2 screws and ignition switch.

(c) Install a new ignition switch with the 2 screws.

(d) Install a new warning switch with the 2 screws.

4. A/T:

INSPECT KEY INTER LOCK SOLENOID

(See page AT1–30)

5. A/T:

IF NECESSARY, REPLACE KEY INTERLOCK SOLENOID

(a) Remove the 2 screws and solenoid.

(b) Install a new solenoid with the 2 screws.

6. IF NECESSARY, REPLACE MAIN SHAFT BUSHING

(a) Using a screwdriver, depress the 3 projections on the busing to release the bushing, then remove the bushing.

NOTICE: If the bushing interior is worn, install a new bushing.

(b) Align the projections on a new bushing with the holes in the lower tube. Install the bushing until the projections are firmly engaged in the holes in the lower tube.

STEERING COLUMN ASSEMBLY

NOTICE: When using a vise, do not overtighten it.

1. APPLY MOLYBDENUM DISULPHIDE LITHIUM BASE GREASE (See page SR–13)

2. INSTALL MAIN SHAFT BUSHING STOPPER AND MAIN SHAFT COLLAR

3. INSTALL MAIN SHAFT ASSEMBLY

(a) Install the bearing, bearing thrust collar and compression spring to the shaft assembly.

(b) Install the shaft assembly into the column upper tube.

NOTICE: Do not bend the universal joint of the main shaft assembly more than 20°.

(c) Using SST, compress the compression spring.
(See page SR–16)

(d) Using snap ring pliers, install a new snap ring.

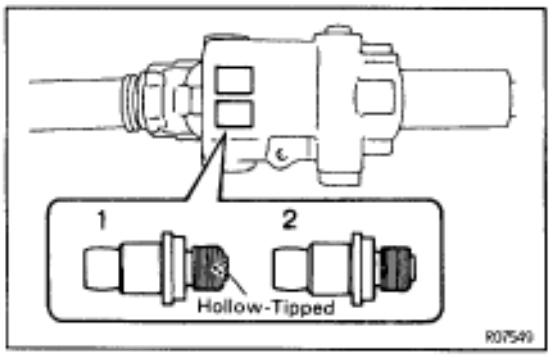

4. SELECT TILT NO.2 BOLTS

Select the bolt with the hollow–tipped thread end when the column upper tube mark is 1, and the bolt with the plain thread end when the mark is 2.

NOTICE: Select the bolt type to match each number marked in the squares on the upper tube.

5. INSTALL MAIN SHAFT ASSEMBLY WITH COLUMN UPPER TUBE

(a) Install the shaft assembly with the upper tube into the lower tube.

(b) Using a vise, press in the 2 tilt No.2 bolts.

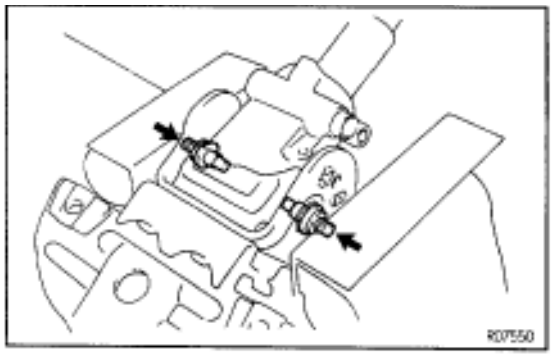

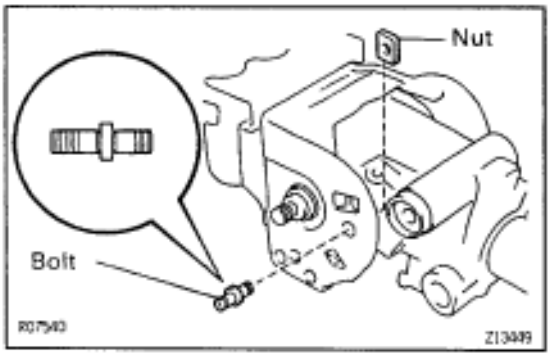

6. INSTALL TILT MEMORY BOLT AND SQUARE NUT

(a) Apply sealant to 2 or 3 threads of the bolt.

Sealant:

Part No. 08833–00080, THREE BOND 1344, LOCTITE 242 or equivalent.

(b) Using a hexagon wrench (4 mm), install the shorter side of the bolt to the nut.

Torque: 6.4 N·m (65 kgf·cm, 56 in.·lbf)

7. INSTALL TILT LEVER LOCK SHAFT, TILT LEVER ASSEMBLY, TILT SUB LEVER AND TILT LEVER

8. INSTALL RIGHT AND LEFT TILT PAWLS

(a) Install the right and left pawls to the column upper tube and temporarily install the bolt and nut.

HINT: Install the pawl pin into the long hole of the tilt lever and tilt sub lever.

(b) Torque the tilt lever assembly set screw.

Torque: 4.7 N·m (48 kgf·cm, 42 in.·lbf)

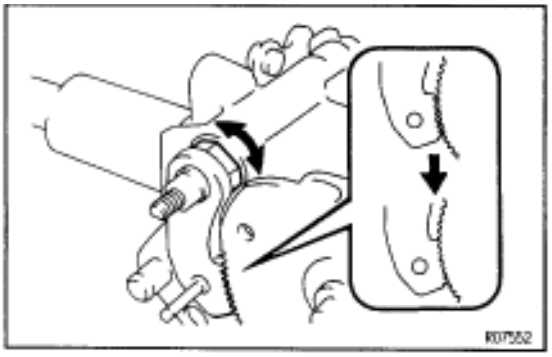

9. ENGAGE AND ADJUST RIGHT AND LEFT TILT PAWLS

(a) Engage the left pawl to the center of the ratchet.

(b) Using a spanner (17 mm), while turning the right pawl side collar, completely engage the right pawl to the ratchet.

NOTICE:

- **Do not turn the collar after the right pawl is engaged.**
- **Keep the bolt and nut temporarily tightened.**

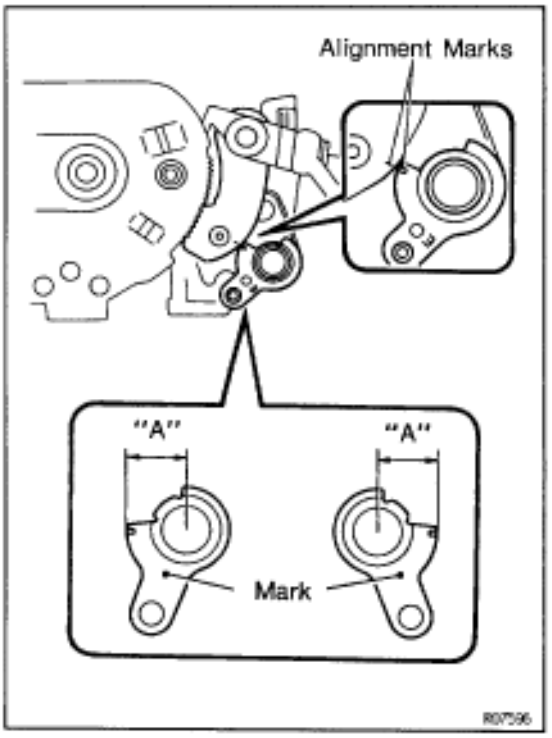

10. SELECT RIGHT AND LEFT TILT PAWL STOPPERS

(a) With the tilt pawl and ratchet engaged, install the pawl stoppers.

(b) Check that the alignment marks on the pawl stopper and pawl align when the pawl stopper is lightly rotated to the pawl side. If the alignment marks do not align, select the pawl stoppers according to the following table.

Right pawl stopper	Left pawl stopper	Dimension "A" mm (in.)
1	A	12.68–12.74 (0.4992–0.5016)
2	B	12.61–12.67 (0.4965–0.4988)
3	C	12.54–12.60 (0.4937–0.4961)
4	D	12.47–12.53 (0.4909–0.4933)
5	E	12.40–12.46 (0.4882–0.4906)
6	F	12.33–12.39 (0.4854–0.4878)
7	G	12.26–12.32 (0.4827–0.4850)

(c) After selecting the pawl stoppers, check that on both sides the pawl and ratchet are fully engaged.

11. INSTALL RIGHT AND LEFT TILT PAWL STOPPERS

12. INSTALL TILT LEVER LEFT RETAINER

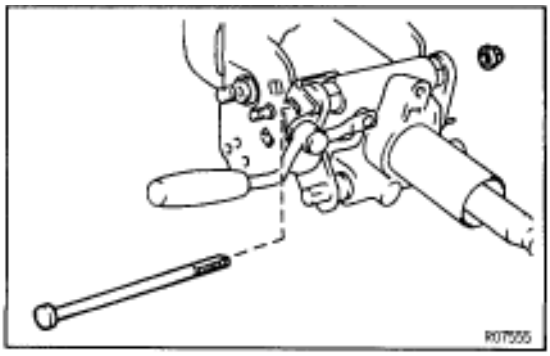

(a) Remove the bolt and nut.

NOTICE: Take care to not turn the collar of the tilt left pawl.

(b) Install the collar to the tilt memory bolt.

(c) Install the retainer.

(d) Install the bolt, washer and torque the nut.

HINT: Install the bolt so that the groove in the bolt shaft faces upward.

Torque: 5.9 N·m (60 kgf·cm, 52 in.·lbf)

(e) Torque the nut of the tilt No.2 bolt side.
Torque: 15 N·m (150 kgf·cm, 11 ft·lbf)

(f) Torque the nut of the memory bolt side.
Torque: 5.9 N·m (60 kgf·cm, 52 in.·lbf)

(g) Install the spacer and a new E–ring.

13. INSTALL TILT LEVER RIGHT RETAINER

(a) Torque the nut.
Torque: 15 N·m (150 kgf·cm, 11 ft·lbf)

(b) Install a new E–ring.

14. INSTALL TURN SIGNAL BRACKET

(a) Apply sealant to 2 or 3 threads of the 2 bolts.
Sealant:
Part No. 08833–00080, THREE BOND 1344, LOCTITE 242 or equivalent.

(b) Torque the 2 bolts.
Torque: 8.8 N·m (90 kgf·cm, 78 in.·lbf)

15. INSTALL 3 TENSION SPRINGS

16. INSTALL COMPRESSION SPRING

(a) Install the 2 bushings to the spring.

(b) Apply sealant to 2 or 3 threads of the torx screw.
Sealant:
Part No. 08833–00080, THREE BOND 1344, LOCTITE 242 or equivalent.

(c) Using a torx socket wrench, torque the screw.
Torque: 6.4 N·m (65 kgf·cm, 56 in.·lbf)

17. INSTALL COLUMN PROTECTOR AND WIRING HARNESS CLAMP
Tighten the 2 screws.

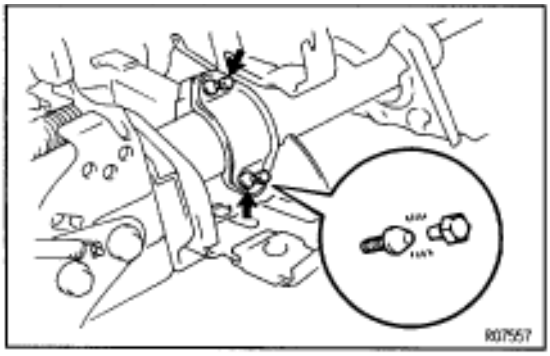

18. INSTALL COLUMN UPPER BRACKET
Tighten the 2 new tapered–head bolts until the bolt head breaks off.

19. INSTALL COLUMN LOWER COVER
Tighten the clamp.

20. INSTALL SHAFT THRUST STOPPER AND SLIDING YOKE

(a) Align the matchmarks on the yoke and main shaft.

(b) Torque the bolt.
Torque: 35 N·m (360 kgf·cm, 26 ft·lbf)

21. INSTALL INTERMEDIATE SHAFT
Temporarily tighten the bolt.

22. CHECK TILT OPERATION

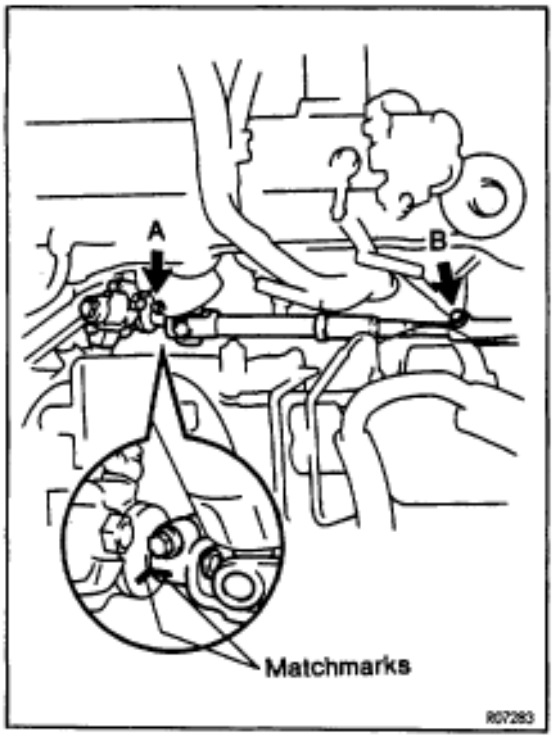

STEERING COLUMN INSTALLATION

1. INSTALL STEERING COLUMN ASSEMBLY

(a) Torque the 4 column assembly set nuts.
Torque: 25 N·m (260 kgf·cm, 19 ft·lbf)

(b) Install the brake pedal return spring.

(c) Align the matchmarks on the intermediate shaft and control valve shaft.

(d) Torque the bolt A.
Torque: 35 N·m (360 kgf·cm, 26 ft·lbf)

(e) Torque the bolt B.
Torque: 35 N·m (360 kgf·cm, 26 ft·lbf)

2. INSTALL COMBINATION SWITCH

(a) Tighten the 4 screws.

(b) Connect the 4 connectors and airbag connector.

3. INSTALL THESE PARTS:
(See page BO–45**)**

(a) Register No.2 duct

(b) Finish panel lower LH

(c) Finish panel lower

(d) Cluster finish panel center

(e) Cluster finish panel LH

(f) Cluster finish panel RH

(g) Cluster finish panel

(h) Console panel upper

4. INSTALL UPPER AND LOWER COLUMN COVER

Tighten the 5 screws.

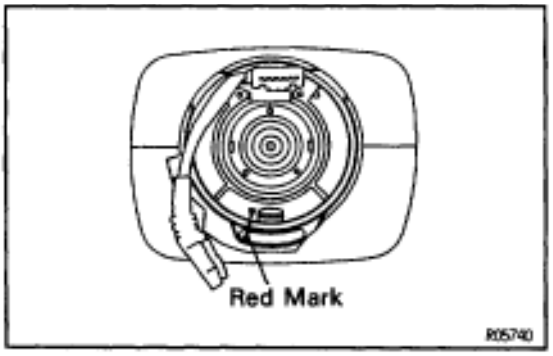

5. CENTER SPIRAL CABLE

(a) Check that the front wheels are facing straight ahead.

(b) Turn the spiral cable counterclockwise by hand until it becomes harder to turn the cable.

(c) Then rotate the spiral cable clockwise about 3 turns to align the red mark.
HINT: The spiral cable will rotate about 3 turns to either left or right of the center.

6. INSTALL STEERING WHEEL

(a) Align the matchmarks on the wheel and main shaft.

(b) Torque the wheel set nut.
Torque: 35 N·m (360 kgf·cm, 26 ft·lbf)

(c) Connect the connector.

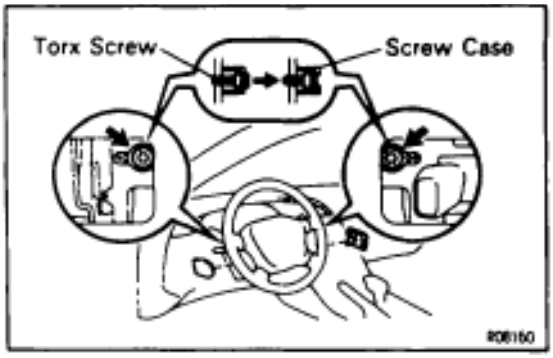

7. INSTALL STEERING WHEEL PAD

(a) Connect the airbag connector.

(b) Install the pad after confirming that the circumference groove of the torx screw is caught on the screw case.

(c) Using a torx socket wrench, torque the 2 screws.

Torque: 7.1 N·m (72 kgf·cm, 62 in·lbf)

NOTICE:

- **Make sure the pad is installed to the specified torque.**
- **If the pad has been dropped, or there are cracks, dents or other defects in the case or connector, replace the pad with a new one.**
- **When installing the pad, take care that the wiring does not interfere with other parts and is not pinched between other parts.**

8. CHECK STEERING WHEEL CENTER POINT

POWER STEERING VANE PUMP

COMPONENTS

2JZ–GE:

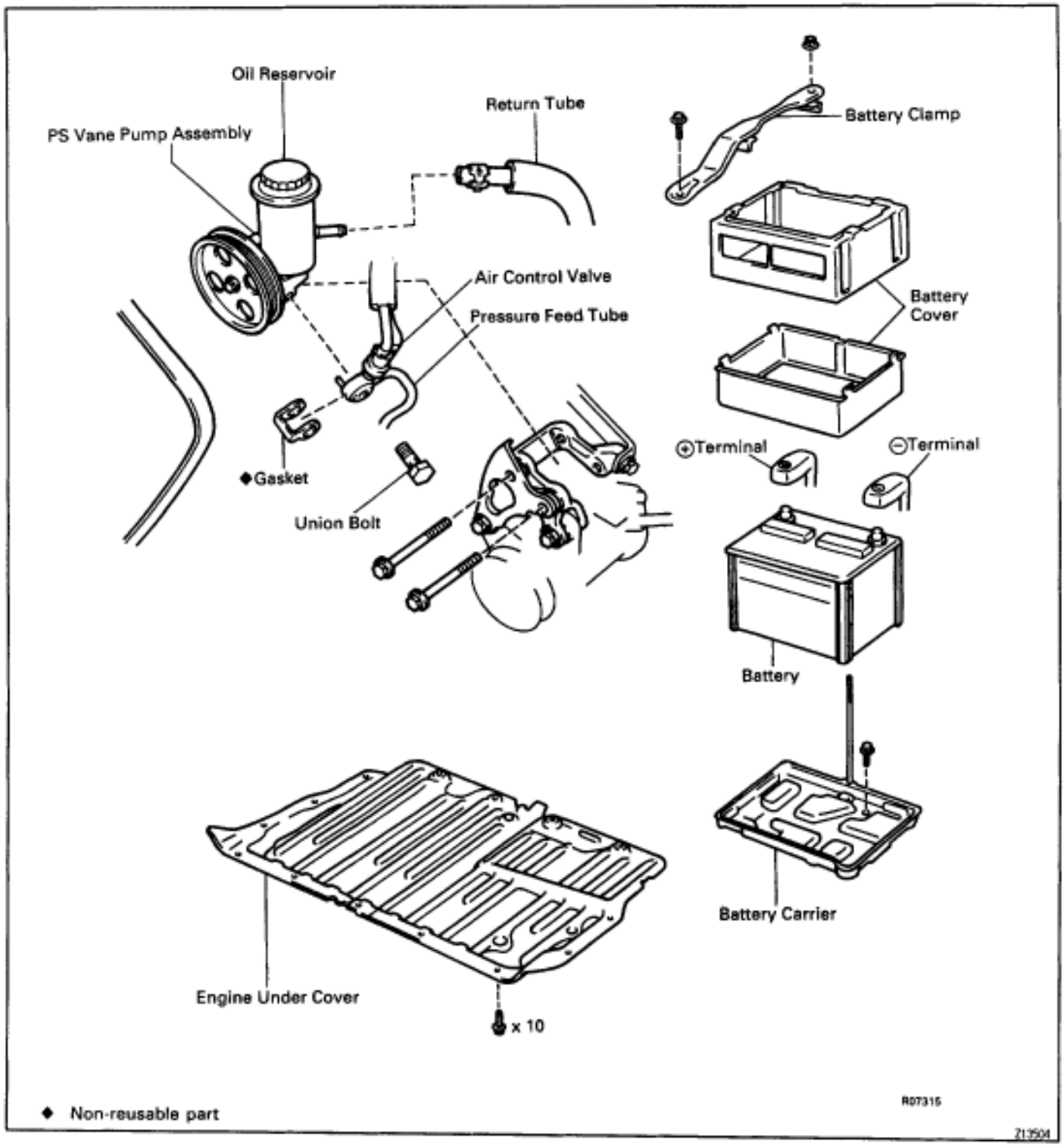

COMPONENTS
2JZ–GTE:

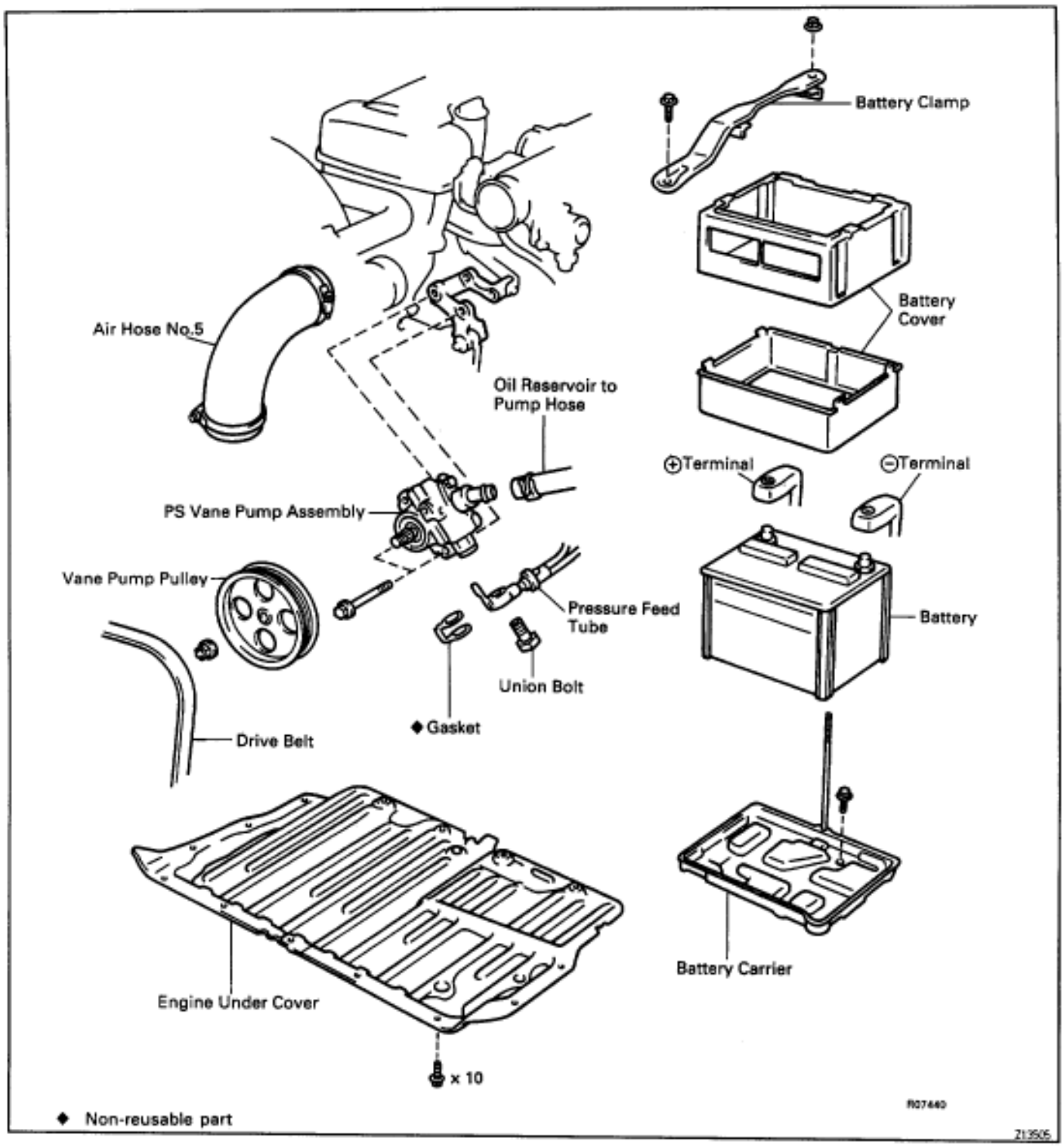

COMPONENTS

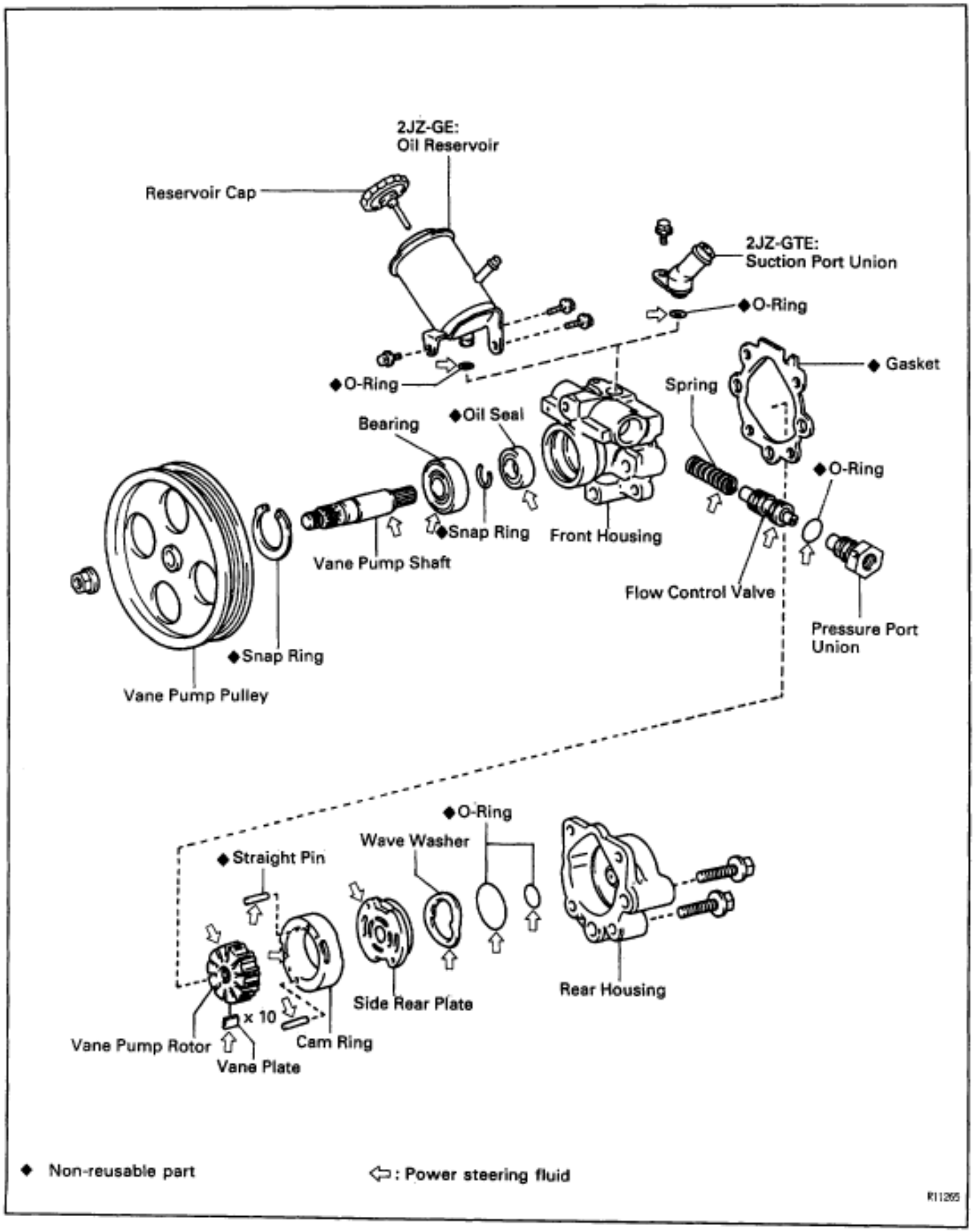
2JZ-GE:
Oil Reservoir
Reservoir Cap
2JZ-GTE:
Suction Port Union
◆O-Ring
◆O-Ring
◆ Gasket
Spring
Bearing
◆Oil Seal
◆O-Ring
◆Snap Ring
Front Housing
Vane Pump Shaft
Flow Control Valve
Pressure Port
Union
◆Snap Ring
Vane Pump Pulley
◆O-Ring
Wave Washer
◆Straight Pin
Rear Housing
Side Rear Plate
x 10
Cam Ring
Vane Pump Rotor
Vane Plate
◆ Non-reusable part
⇦: Power steering fluid
R11265

POWER STEERING VANE PUMP REMOVAL

1. **REMOVE ENGINE UNDER COVER**
   Remove the 10 screws.
2. **REMOVE BATTERY**
3. **2JZ–GTE:**
   REMOVE AIR HOSE NO.5
4. **2JZ–GTE:**
   DISCONNECT OIL RESERVOIR TO PUMP HOSE
   NOTICE: Take care not to spill fluid on the A/C compressor rotor.

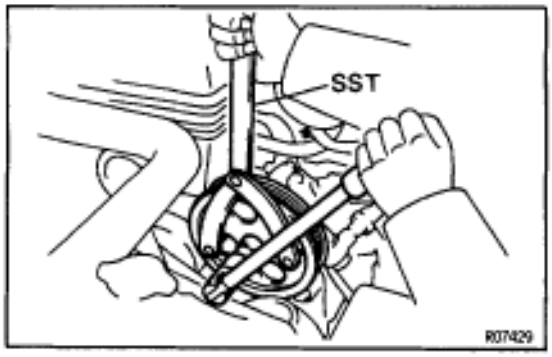

5. **2JZ–GE:**
   DISCONNECT RETURN TUBE
   NOTICE: Take care not to spill fluid on the A/C compressor rotor.
6. **2JZ–GTE:**
   REMOVE VANE PUMP PULLEY
   Using SST to stop the pulley rotating, remove the nut.
   SST 09960–10010

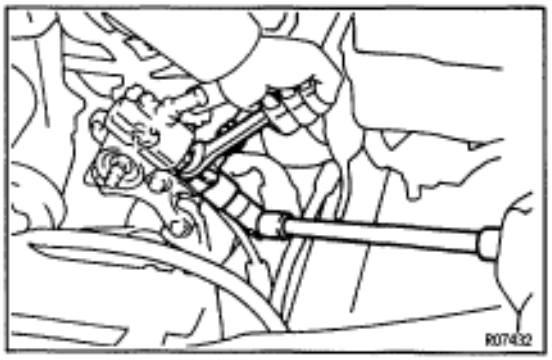

7. **REMOVE PRESSURE FEED TUBE**
   Using a spanner (24 mm) to hold the pressure port union, remove the union bolt and gasket.

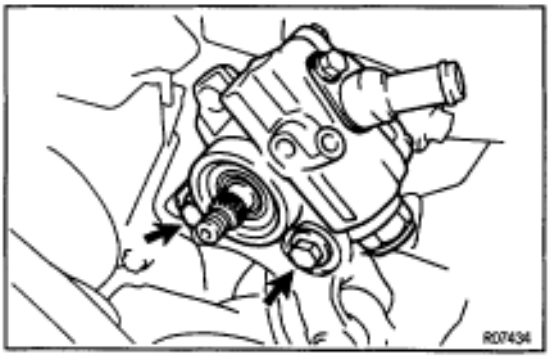

8. **REMOVE PS VANE PUMP ASSEMBLY**
   Remove the 2 bolts.

POWER STEERING VANE PUMP DISASSEMBLY

NOTICE: When using a vise, do not overtighten it.

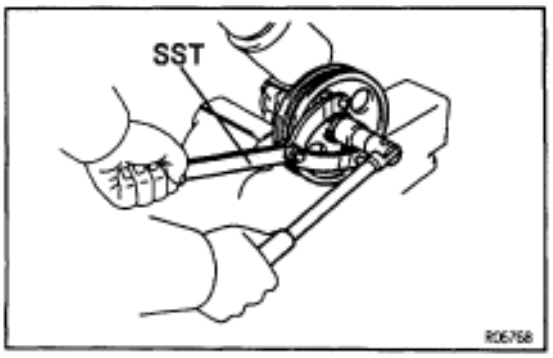

1. **2JZ–GE:**
   REMOVE VANE PUMP PULLEY
   Using SST to stop the pulley rotating, remove the nut.
   SST 09960–10010

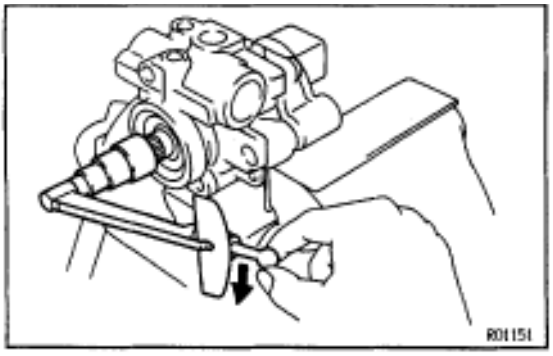

2. MEASURE PS VANE PUMP ROTATING TORQUE

(a) Check that the shaft rotates smoothly without abnormal noise.

(b) Temporarily install the pulley set nut, and using a torque wrench, check the pump rotating torque.

Rotating torque: 0.2 N·m (2.5 kgf·cm, 2.2 in.·lbf) or less

3. 2JZ–GE:
REMOVE OIL RESERVOIR

(a) Remove the 3 bolts.

(b) Remove the O–ring from the reservoir.

4. 2JZ–GTE:
REMOVE SUCTION PORT UNION

(a) Remove the bolt.

(b) Remove the O–ring from the union.

5. REMOVE PRESSURE PORT UNION, FLOW CONTROL VALVE AND SPRING

Remove the O–ring from the union.

6. REMOVE REAR HOUSING

Remove the 2 bolts.

7. REMOVE CAM RING, ROTOR AND 10 VANE PLATES

NOTICE: Take care to not drop the vane plates.

8. REMOVE 2 STRAIGHT PINS

9. REMOVE GASKET

10. REMOVE VANE PUMP SHAFT WITH BEARING

(a) Using snap ring pliers, remove the snap ring from the front housing.

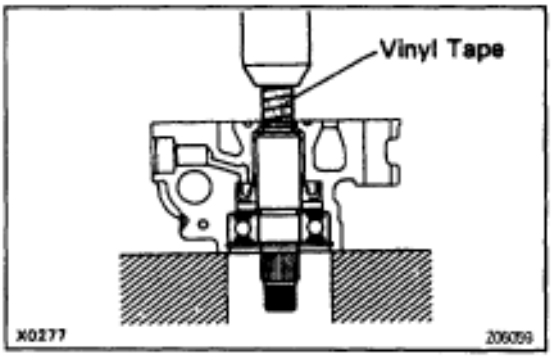

(b) Wind vinyl tape on the serrated part of the shaft.

(c) Using a press, press out the shaft with the bearing.

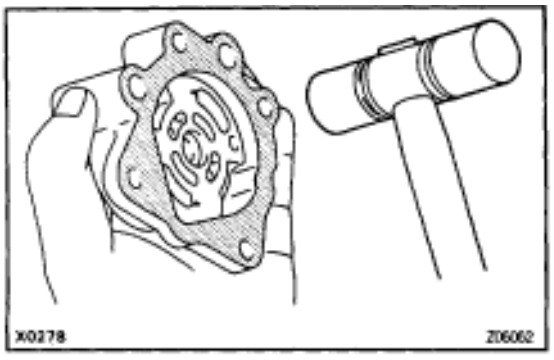

11. REMOVE SIDE REAR PLATE AND WAVE WASHER

(a) Using a plastic hammer, tap the rear housing on the shaded area until the plate and washer come off.

(b) Remove the 2 O–ring from the rear housing.

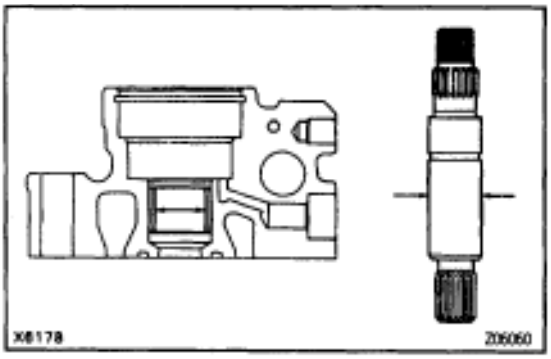

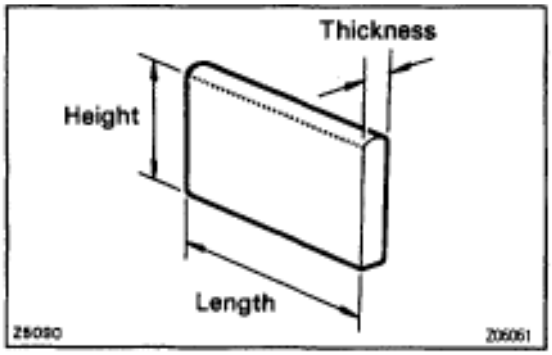

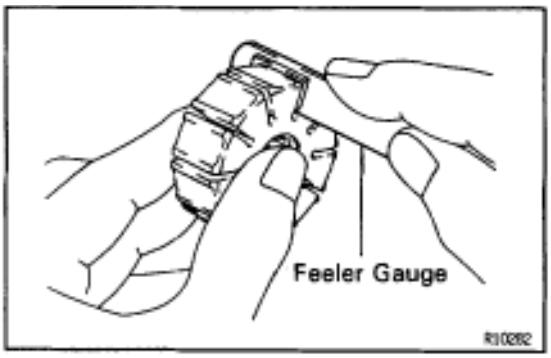

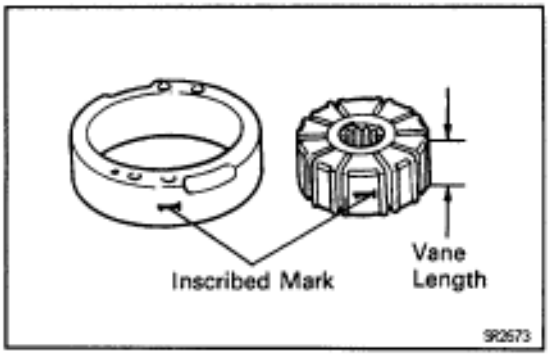

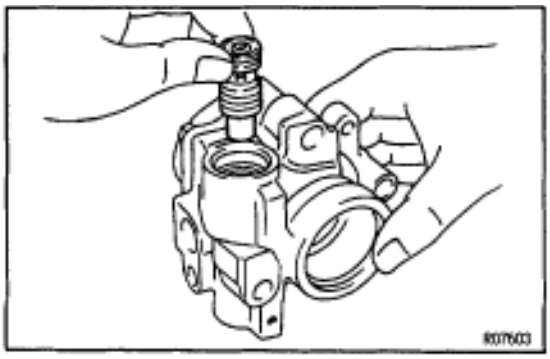

POWER STEERING VANE PUMP INSPECTION AND REPLACEMENT

NOTICE: When using a vise, do not overtighten it.

1. MEASURE OIL CLEARANCE BETWEEN VANE PUMP SHAFT AND BUSHING

Using a micrometer and caliper gauge, measure the oil clearance.

	Oil clearance mm (in.)
Standard	0.03–0.05 (0.0012–0.0020)
Maximum	0.07 (0.0028)

2. INSPECT VANE PUMP ROTOR AND VANE PLATES

(a) Using a micrometer, measure the height, thickness and length of the 10 vane plates.

	Minimum mm (in.)
Height	8.6 (0.339)
Thickness	1.40 (0.0551)
Length	14.99 (0.5902)

(b) Using a feeler gauge, measure the clearance between the rotor groove and plate.

	Clearance mm (in.)
Maximum	0.035 (0.0014)

If more than maximum, replace the plate and/or rotor with one having the same mark stamped on the cam ring.

Inscribed mark:

1, 2, 3, 4 or None

HINT: There are 5 vane lengths with the following rotor and cam ring marks:

Rotor and cam ring number	Vane plate length mm (in.)
None	14.999–15.001 (0.59051–0.59059)
1	14.997–14.999 (0.59043–0.59051)
2	14.995–14.997 (0.59035–0.59043)
3	14.993–14.995 (0.59027–0.59035)
4	14.991–14.993 (0.59020–0.59027)

3. INSPECT FLOW CONTROL VALVE

(a) Coat the valve with power steering fluid and check that it falls smoothly into the valve hole by its own weight.

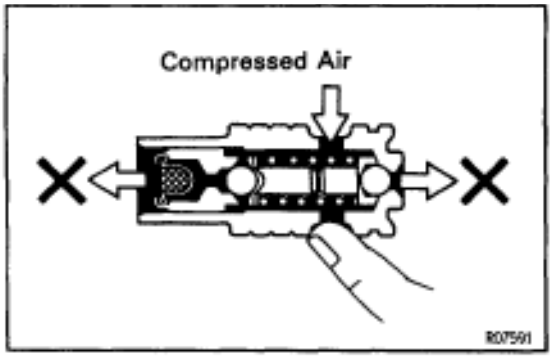

(b) Check the valve for leakage. Close one of the holes and apply 392–490 kPa (4–5 kgf/cm^2, 57–71 psi) of compressed air into the opposite side, and confirm that air does not come out from the end holes.

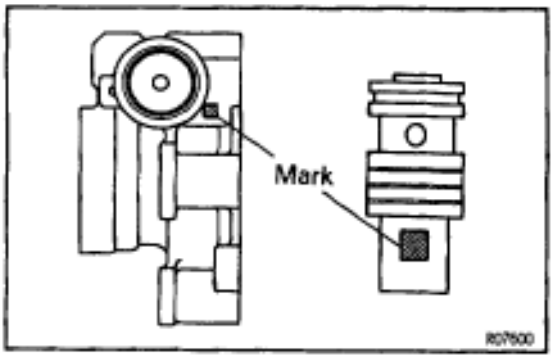

If necessary, replace the valve with one having the same letter as inscribed on the front housing.

Inscribed mark:

A, B, C, D, E or F

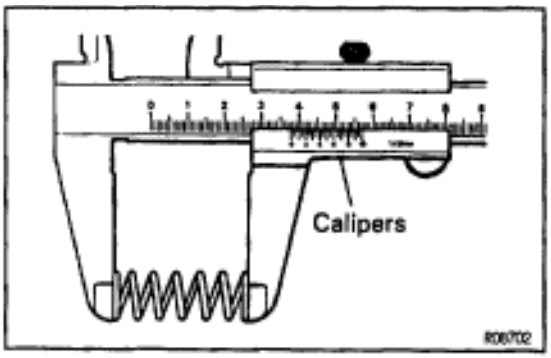

4. INSPECT SPRING

Using calipers, measure the free length of the spring.

	Free length	mm (in.)
Minimum	33 (1.30)	

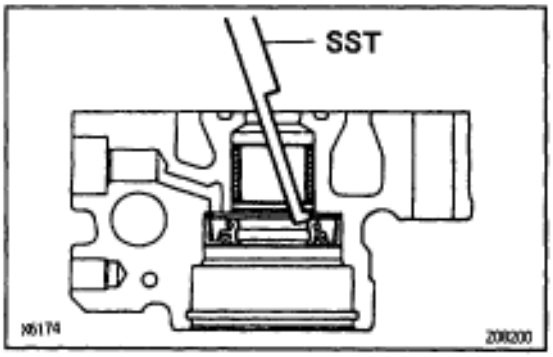

5. IF NECESSARY, REPLACE OIL SEAL

(a) Using SST, tap out the oil seal.
SST 09631–10030
NOTICE: Be careful not to damage the bushing of the front housing.

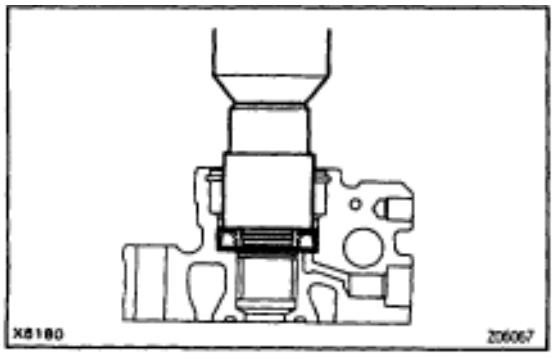

(b) Coat a new oil seal lip with power steering fluid.
(c) Using a socket wrench (24 mm), press in the oil seal.
NOTICE: Make sure you install the oil seal facing the correct direction.

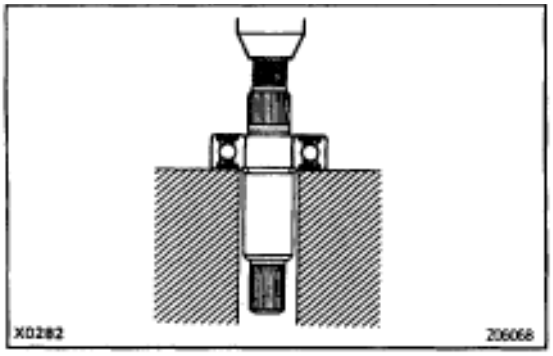

6. IF NECESSARY, REPLACE BEARING

(a) Using a press, press out the bearing.

(b) Using snap ring pliers, remove the snap ring from the vane pump shaft.

(c) Using snap ring pliers, install a new snap ring.

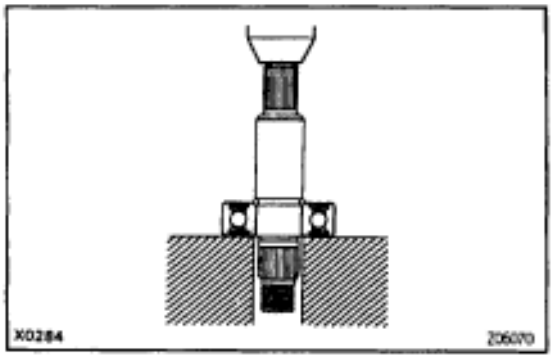

(d) Using a press, press in a new bearing.

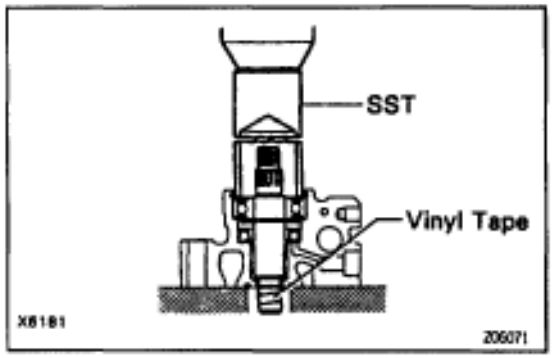

POWER STEERING VANE PUMP ASSEMBLY

NOTICE: When using a vise, do not overtighten it.

1. COAT WITH POWER STEERING FLUID

(See page SR–25)

2. INSTALL VANE PUMP SHAFT WITH BEARING

(a) Wind vinyl tape on the serrated part of the shaft.

(b) Using SST, press in the shaft with the bearing to the front housing.

SST 09608–30012 (09608–04030)

NOTICE: Be careful not to damage the oil seal.

(c) Using snap ring pliers, install a new snap ring to the front housing.

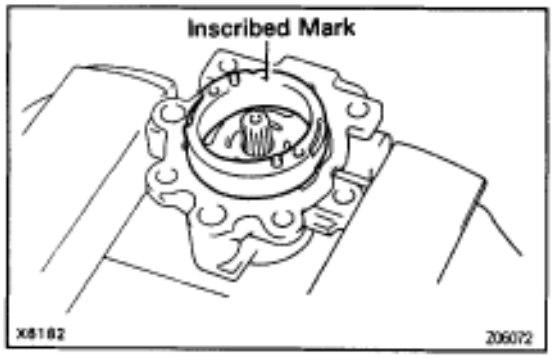

3. INSTALL STRAIGHT PINS

Using a plastic hammer, drive in 2 new straight pins to the front housing.

4. INSTALL CAM RING

Align the holes of the ring and straight pins, and install the ring with the inscribed mark facing outward.

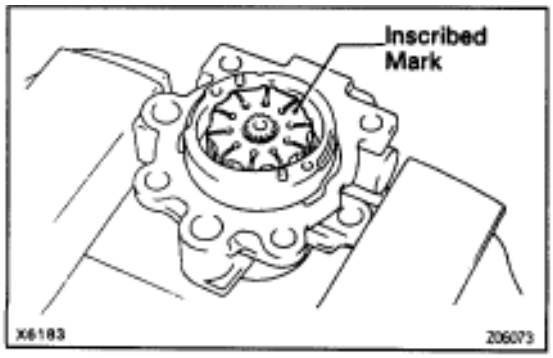

5. INSTALL VANE PUMP ROTOR

Install the rotor with the inscribed mark facing outward.

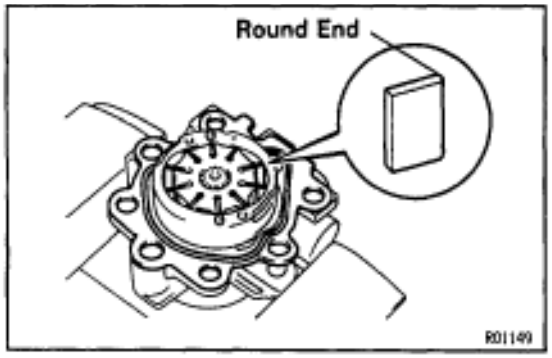

6. INSTALL 10 VANE PLATES

Install the plate with the round end facing outward.

7. INSTALL GASKET

Install a new gasket to the front housing.

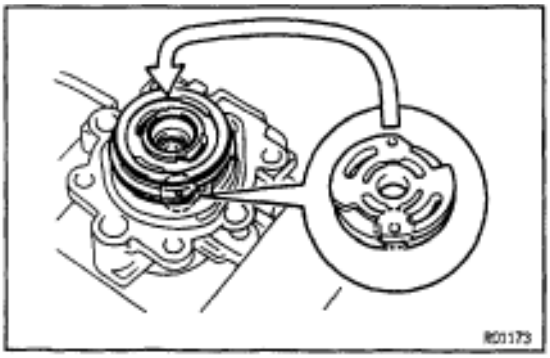

8. INSTALL SIDE REAR PLATE

Align the holes of the plate and straight pins.

NOTICE: Make sure you install the plate facing the correct direction.

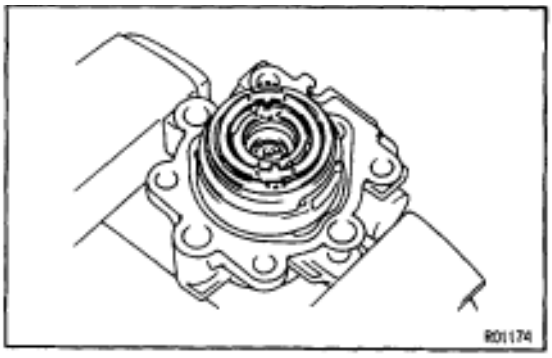

9. INSTALL WAVE WASHER

Install the washer so that its protrusions fit into the slots in the side rear plate.

10. INSTALL REAR HOUSING

(a) Coat 2 new O–rings with power steering fluid.

(b) Install the 2 O–ring to the housing.

(c) Torque the 2 bolts.

Torque: 17 N·m (170 kgf·cm, 12 ft·lbf)

11. INSTALL SPRING, FLOW CONTROL VALVE AND PRESSURE PORT UNION

(a) Coat a new O–ring with power steering fluid and install it to the union.

(b) Torque the union.

Torque: 83 N·m (850 kgf·cm, 61 ft·lbf)

12. 2JZ–GTE:
INSTALL SUCTION PORT UNION

(a) Install a new O–ring to the union.

(b) Torque the bolt.

Torque: 13 N·m (130 kgf·cm, 9 ft·lbf)

13. 2JZ–GE:
INSTALL OIL RESERVOIR

(a) Coat a new O–ring with power steering fluid and install it to the reservoir.

(b) Torque the 3 bolts.

Torque:

Front side bolt: 13 N·m (130 kgf·cm, 9 ft·lbf)

Rear side bolts: 17 N·m (170 kgf·cm, 12 ft·lbf)

14. MEASURE PS VANE PUMP ROTATING TORQUE
(See page SR–27)

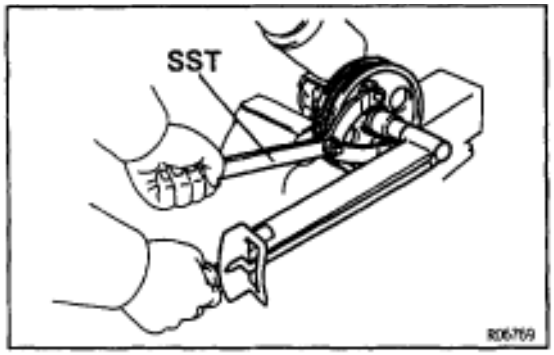

15. 2JZ–GE:
INSTALL VANE PUMP PULLEY
Using SST to stop the pulley rotating, torque the nut.
SST 09960–10010
Torque: 43 N·m (440 kgf·cm, 32 ft·lbf)

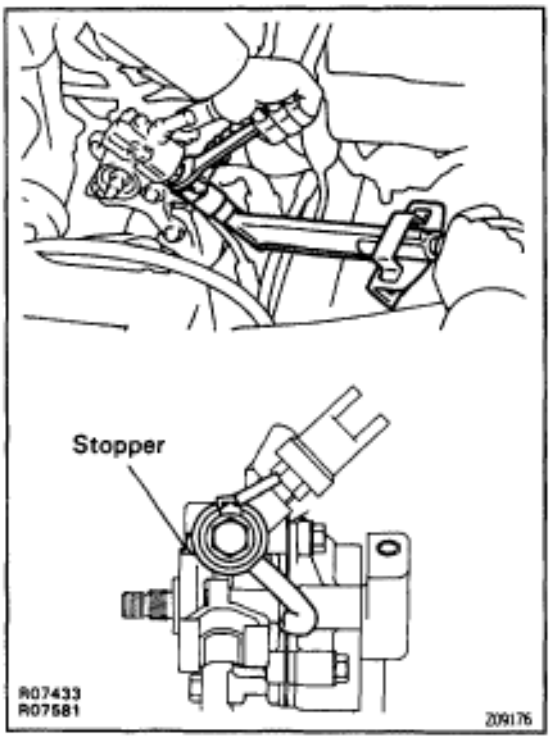

POWER STEERING VANE PUMP INSTALLATION

1. INSTALL VANE PUMP ASSEMBLY
Torque the 2 bolts.
Torque: 58 N·m (590 kgf·cm, 42 ft·lbf)

2. CONNECT PRESSURE FEED TUBE
Using a spanner (24 mm) to hold the pressure port union, torque the union bolt with a new gasket.
HINT: Make sure the stopper is touching the pump housing as shown, then torque the union bolt.
Torque: 49 N·m (500 kgf·cm, 36 ft·lbf)

3. 2JZ–GTE:
INSTALL VANE PUMP PULLEY
Using SST to stop the pulley rotating, torque the nut.
SST 09960–10010
Torque: 43 N·m (440 kgf·cm, 32 ft·lbf)

4. 2JZ–GE:
CONNECT RETURN TUBE

5. 2JZ–GTE:
CONNECT OIL RESERVOIR TO PUMP HOSE

6. 2JZ–GTE:
INSTALL AIR HOSE NO.5

7. INSTALL BATTERY

8. INSTALL ENGINE UNDER COVER
Install the 10 screws.

POWER STEERING GEAR

COMPONENTS

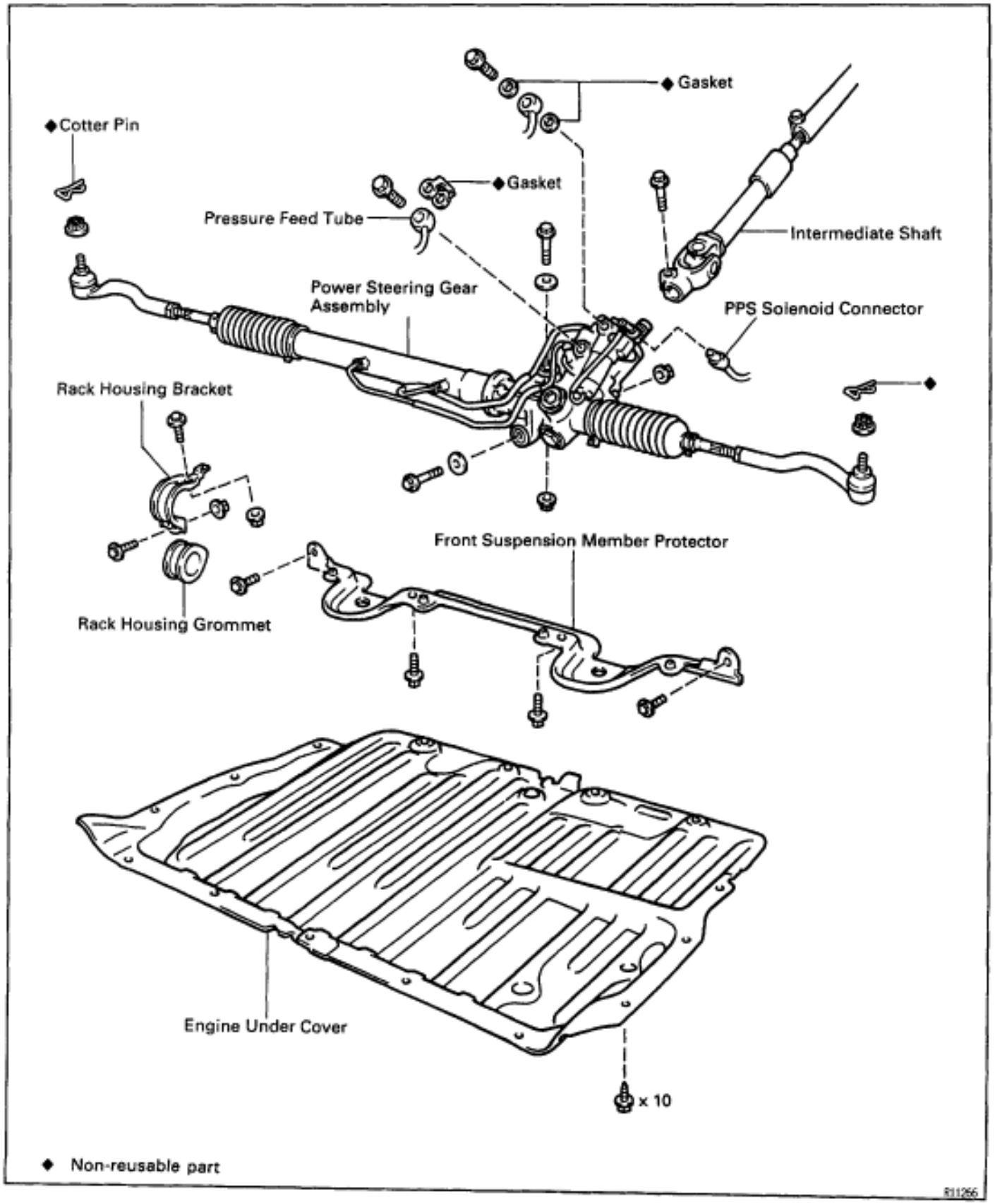

COMPONENTS

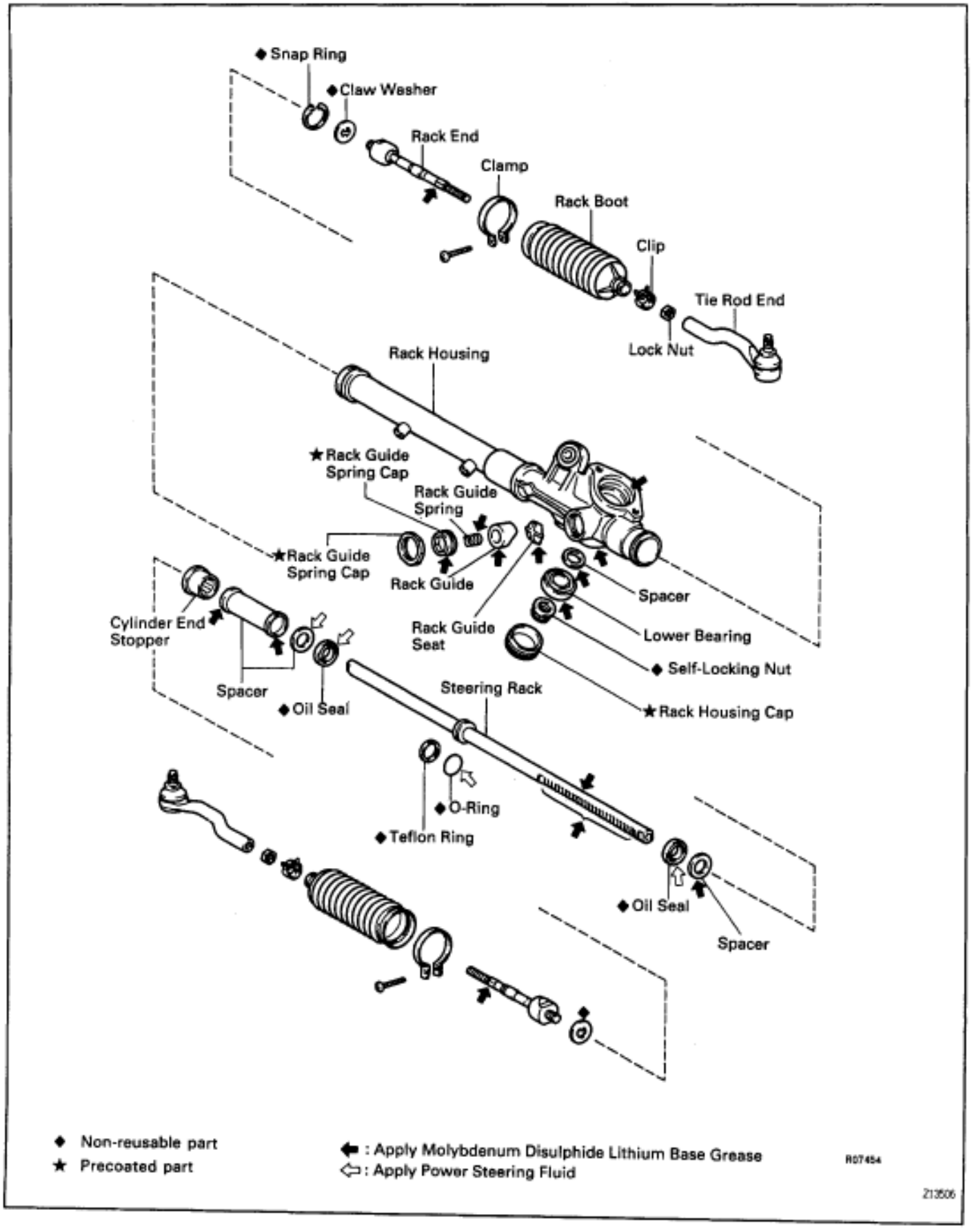
◆ Snap Ring
◆ Claw Washer
Rack End
Clamp
Rack Boot
Clip
Tie Rod End
Lock Nut
Rack Housing
★ Rack Guide Spring Cap
Rack Guide Spring
★ Rack Guide Spring Cap
Rack Guide
Spacer
Cylinder End Stopper
Rack Guide Seat
Lower Bearing
◆ Self-Locking Nut
Spacer
◆ Oil Seal
Steering Rack
★ Rack Housing Cap
◆ O-Ring
◆ Teflon Ring
◆ Oil Seal
Spacer
◆ Non-reusable part
★ Precoated part
⬅ : Apply Molybdenum Disulphide Lithium Base Grease
⇦ : Apply Power Steering Fluid
R07454
Z13506

COMPONENTS

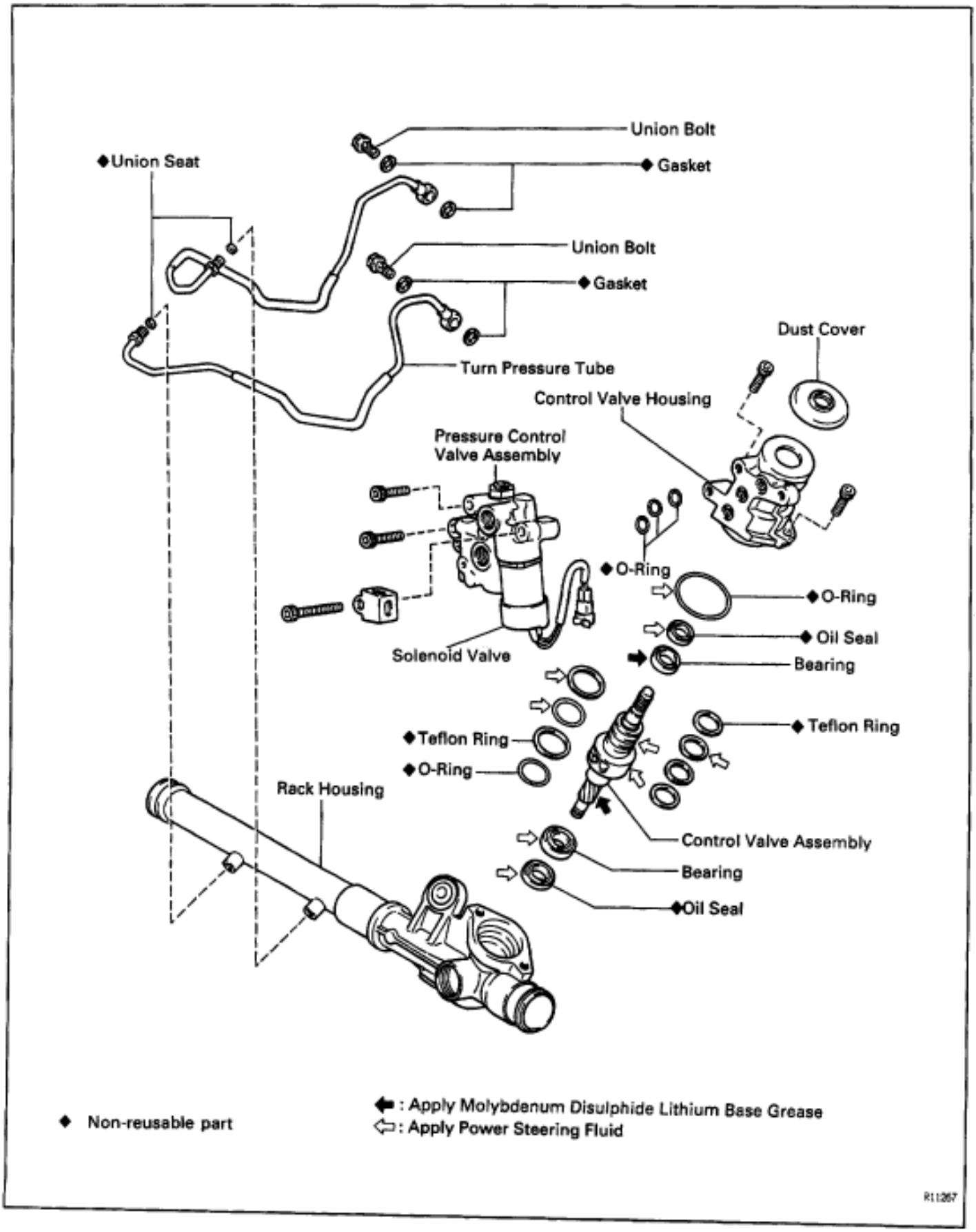
Union Bolt
◆Union Seat
◆ Gasket
Union Bolt
◆ Gasket
Dust Cover
Turn Pressure Tube
Control Valve Housing
Pressure Control
Valve Assembly
◆O-Ring
◆O-Ring
◆ Oil Seal
Bearing
Solenoid Valve
◆Teflon Ring
◆Teflon Ring
◆O-Ring
Rack Housing
Control Valve Assembly
Bearing
◆Oil Seal
◆ Non-reusable part
⬅ : Apply Molybdenum Disulphide Lithium Base Grease
⇦ : Apply Power Steering Fluid
R11267

POWER STEERING GEAR REMOVAL

1. **REMOVE ENGINE UNDER COVER**
   Remove the 10 screws.
2. **REMOVE FR SUSPENSION MEMBER PROTECTOR**
   Remove the 4 bolts.
3. **DISCONNECT INTERMEDIATE SHAFT**
   (See page SR–15)
4. **DISCONNECT RH AND LH TIE ROD ENDS**
   (See page SA–17)
5. **DISCONNECT PRESSURE FEED TUBE**
   Remove the union bolt and gasket.
6. **DISCONNECT RETURN TUBE**
   Remove the union bolt and 2 gaskets.
7. **DISCONNECT PPS SOLENOID CONNECTOR**
8. **REMOVE RACK HOUSING BRACKET AND GROMMET**
   Remove the 2 bolts and nuts.
9. **REMOVE POWER STEERING GEAR ASSEMBLY**
   Remove the 2 bolts and nuts.

POWER STEERING GEAR DISASSEMBLY

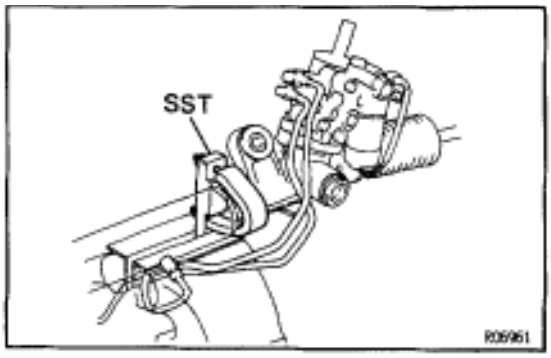

NOTICE: When using a vise, do not overtighten it.

1. **SECURE PS GEAR ASSEMBLY IN VISE**
   Using SST, secure the gear assembly in a vise.
   SST 09612–00012

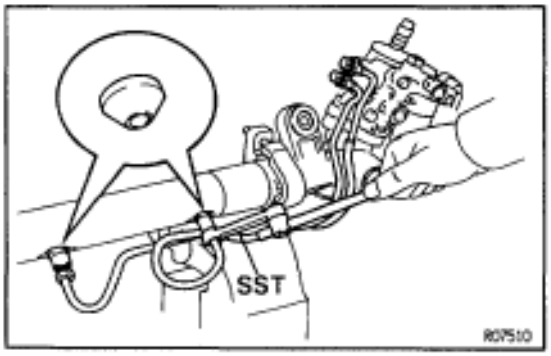

2. **REMOVE TURN PRESSURE TUBES**

(a) Remove the 2 union bolts and 4 gaskets.
(b) Using SST, remove the 2 tubes.
   SST 09633–00020
(c) Remove the 2 union seats.

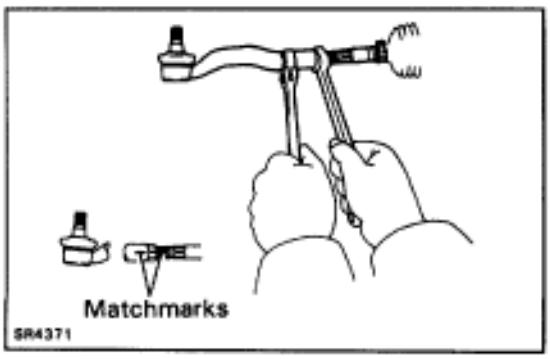

3. **REMOVE RH AND LH TIE ROD ENDS AND LOCK NUTS**
   Place matchmarks on the tie rod end and rack end and loosen the lock nut.
4. **REMOVE RH AND LH CLIPS, RACK BOOTS AND CLAMPS**
   NOTICE:
   - **Be careful not to damage the boot.**
   - **Mark the RH and LH boots.**

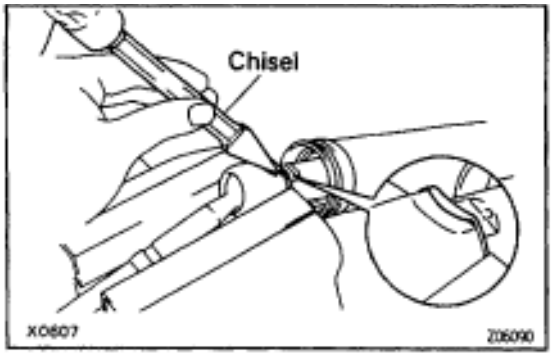

5. REMOVE RH AND LH RACK ENDS AND CLAW WASHERS

(a) Using a chisel and hammer, unstake the washer.
NOTICE: Avoid any impact to the steering rack.

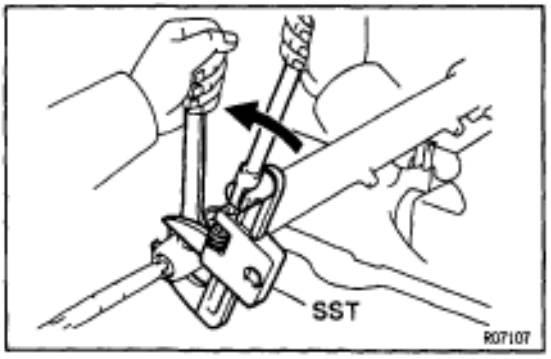

(b) Using a spanner (22 mm) to hold the steering rack, and using SST, remove the rack end.
SST 09922–10010
NOTICE: Use SST 09922–10010 in the direction shown in the illustration.

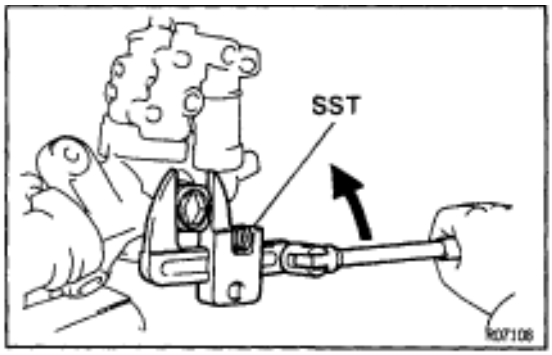

6. REMOVE RACK GUIDE SPRING CAP LOCK NUT
Using SST, remove the nut.
SST 09922–10010
NOTICE: Use SST 09922–10010 in the direction shown in the illustration.

7. REMOVE RACK GUIDE SPRING CAP, RACK GUIDE SPRING, RACK GUIDE AND RACK GUIDE SEAT

(a) Using a hexagon wrench (24 mm), remove the cap.
(b) Remove the seat from the guide.

8. REMOVE RACK HOUSING CAP

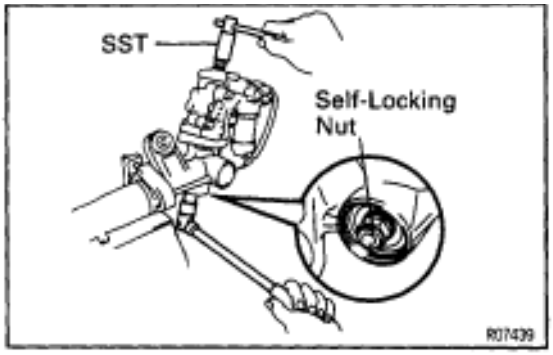

9. REMOVE SELF–LOCKING NUT, BEARING AND SPACER
Using SST to stop the control valve shaft rotating, remove the nut.
SST 09616–00010

10. REMOVE DUST COVER

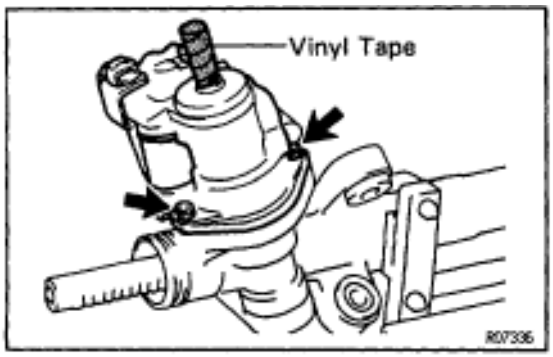

11. REMOVE CONTROL VALVE HOUSING

(a) To prevent oil seal lip damage, wind vinyl tape on the serrated part of the control valve shaft.
(b) Using a hexagon wrench (6 mm), remove the 2 bolts.
(c) Remove the O–ring from the housing.

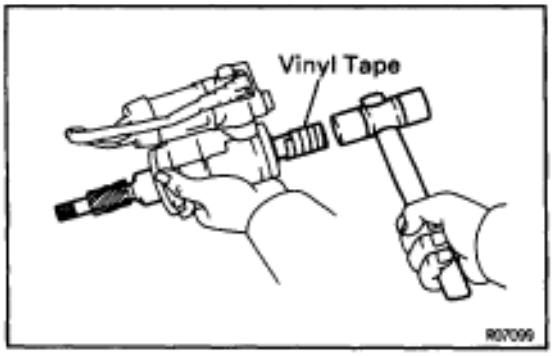

12. REMOVE CONTROL VALVE ASSEMBLY

Using a plastic hammer, tap out the control valve.

13. REMOVE CYLINDER END STOPPER AND 2 SPACERS

Using snap ring pliers, remove the snap ring from the rack housing.

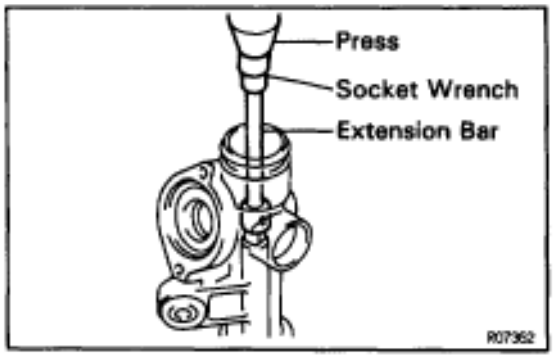

14. REMOVE STEERING RACK AND OIL SEAL

Using an extension bar or brass bar and a press, press out the rack.

NOTICE: Take care to not drop the rack.

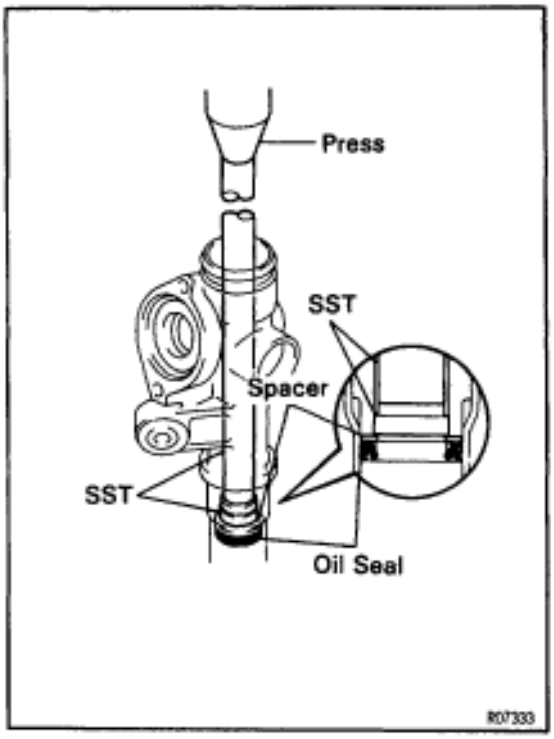

15. REMOVE OIL SEAL AND SPACER

Using SST and a press, press out the oil seal and spacer.
SST 09631–12020, 09631–20031

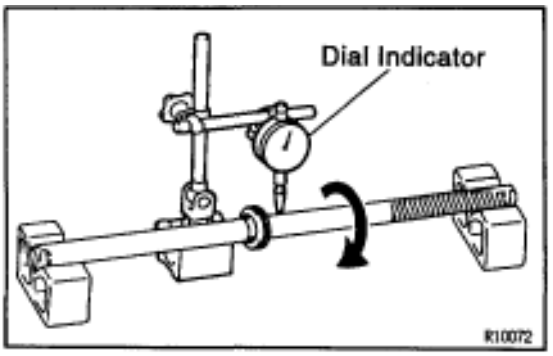

POWER STEERING GEAR INSPECTION AND REPLACEMENT

NOTICE: When using a vise, do not overtighten it.

1. INSPECT STEERING RACK

(a) Using a dial indicator, check the rack for runout and for teeth wear or damage.

	Runout mm (in.)
Maximum	0.30 mm (0.0118 in.)

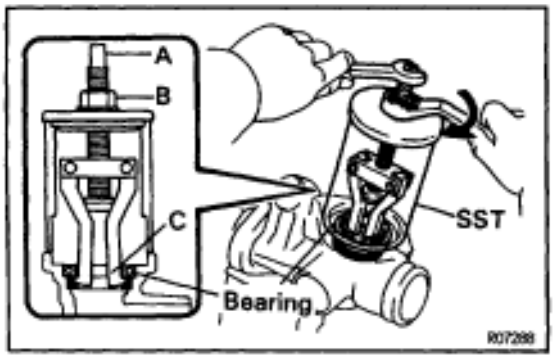

(b) Check the back surface for wear or damage.

2. IF NECESSARY, REPLACE BEARING AND OIL SEAL

(a) Set SST to the rack housing, as shown.
SST 09612–30012

(b) Turn A clockwise and engage the tips of C on the bearing.

(c) Using a spanner (8 mm), keep A fixed while turning nut B clockwise, and remove the bearing.
NOTICE: Be careful not to damage the rack housing.

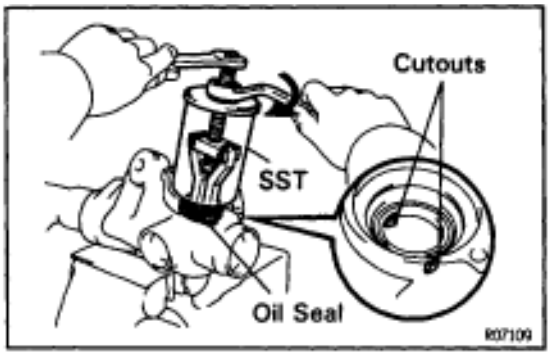

(d) Using SST, remove the oil seal from the rack housing.
SST 09612–30012
NOTICE: Be careful not to damage the rack housing.
HINT: When using SST, apply the tips of SST to the cutouts in the rack housing.

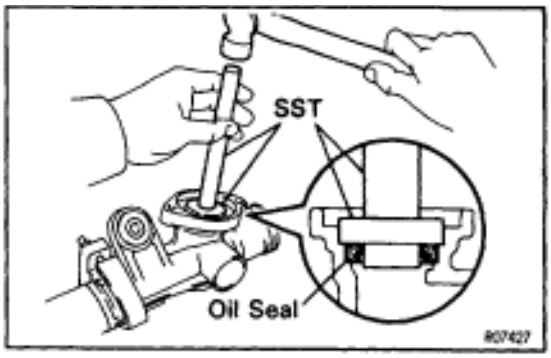

(e) Coat a new oil seal lip with power steering fluid.

(f) Using SST, install the oil seal.
SST 09620–30010 (09624–30010, 09631–00020)
NOTICE: Make sure you install the oil seal facing the correct direction.

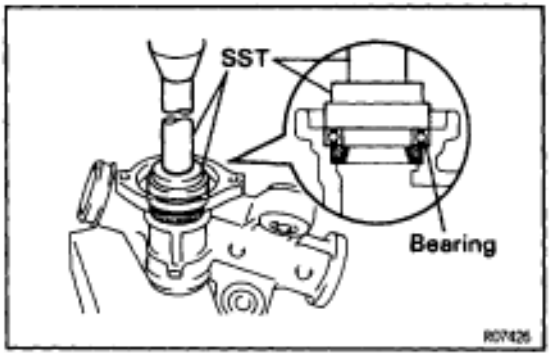

(g) Using SST and a press, press in a new bearing.
SST 09620–30010 (09626–30010, 09631–00020)

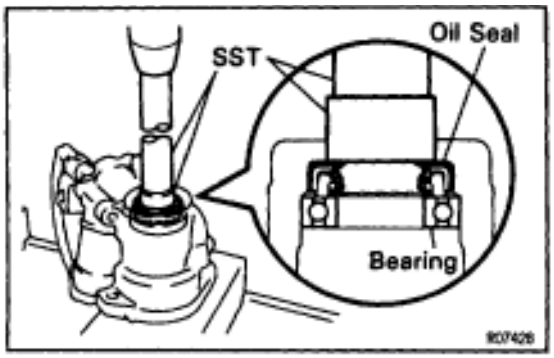

3. IF NECESSARY, REPLACE OIL SEAL AND BEARING

(a) Using SST and a press, press out the oil seal with the bearing from the control valve housing.
SST 09620–30010 (09631–00020)
09630–24013 (09620–24010)

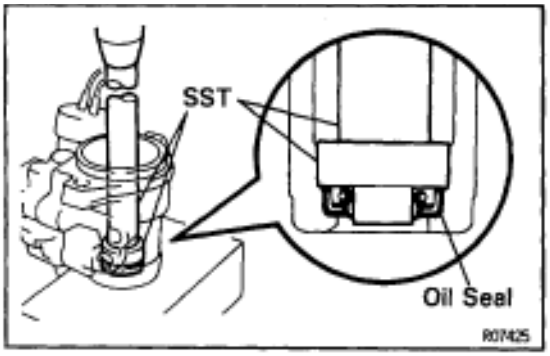

(b) Coat a new oil seal lip with power steering fluid.
(c) Using SST and a press, press in the oil seal.
SST 09620–30010 (09631–00020)
09630–24013 (09620–24020)
NOTICE: Make sure you install the oil seal facing the correct direction.

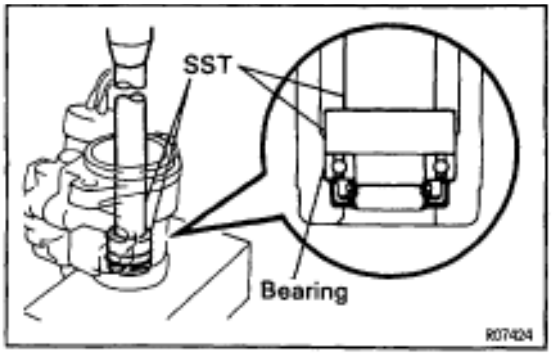

(d) Using SST and a press, press in a new bearing.
SST 09620–30010 (09631–00020)
09630–24013 (09620–24030)

4. IF NECESSARY, REPLACE TEFLON RING AND O–RING

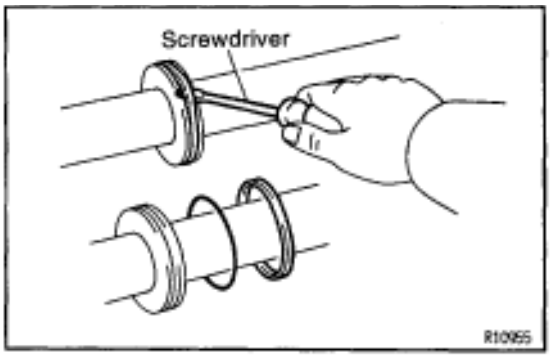

(a) Using a screwdriver, remove the teflon ring and O–ring.
NOTICE: Be careful not to damage the groove for the teflon ring.
(b) Coat a new O–ring with power steering fluid and install it.

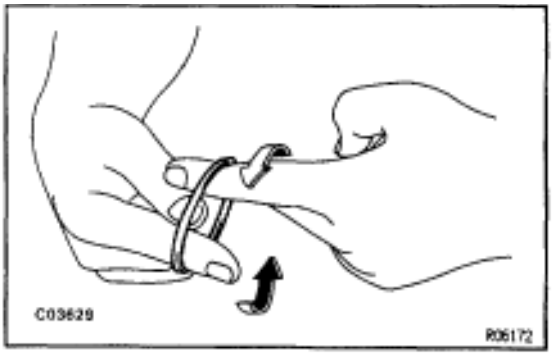

(c) Expand a new teflon ring with your fingers.
NOTICE: Be careful not to over–expand the ring.

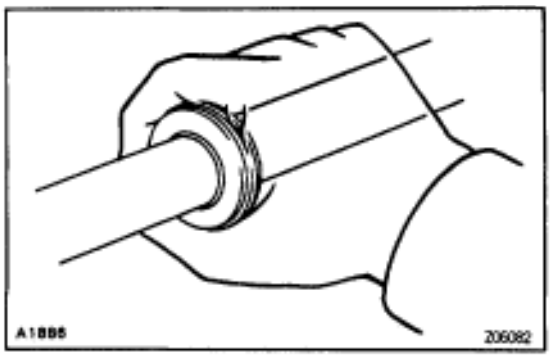

(d) Install the teflon ring to the rack.
(e) Coat the teflon ring with power steering fluid, and snug it down with your fingers.

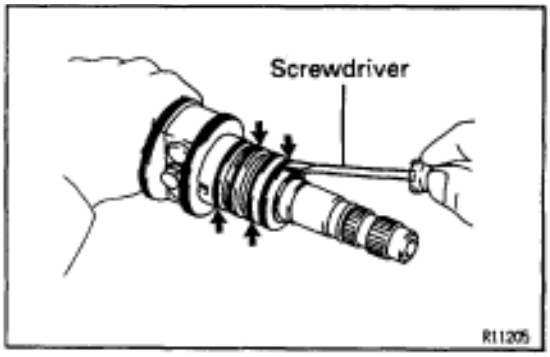

5. IF NECESSARY, REPLACE TEFLON RINGS

(a) Using a screwdriver, remove the 4 rings from the control valve assembly.
NOTICE: Be careful not to damage the grooves for the ring.

(b) Expand 4 new rings with your fingers.
NOTICE: Be careful not to over–expand the ring.

(c) Install the 4 rings.

(d) Coat the 4 rings with power steering fluid and snug them down with your fingers.

(e) Carefully slide the tapered end of SST over the rings to seal them.
SST 09631–20081
NOTICE: Be careful not to damage the rings.

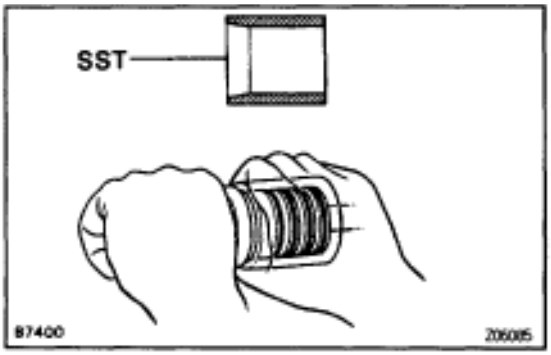

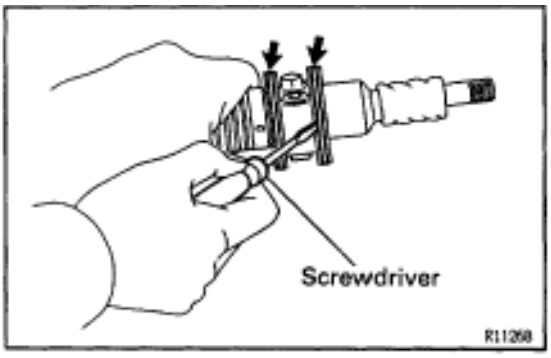

6. IF NECESSARY, REPLACE TEFLON RINGS AND O–RINGS

(a) Using a screwdriver, remove the 2 teflon rings and O –rings from the control valve assembly.
NOTICE: Be careful not to damage the grooves for the teflon ring.

(b) Coat 2 new O–rings with power steering fluid, and install them.

(c) Expand 2 new teflon rings with your fingers.
NOTICE: Be careful not to over–expand the teflon rings.

(d) Install the 2 teflon rings.

(e) Coat the teflon rings with power steering fluid, and snug them down with your fingers.

(f) Carefully slide the tapered end of SST over the teflon rings to seal them.
SST 09631–32020
NOTICE: Be careful not to damage the teflon rings.

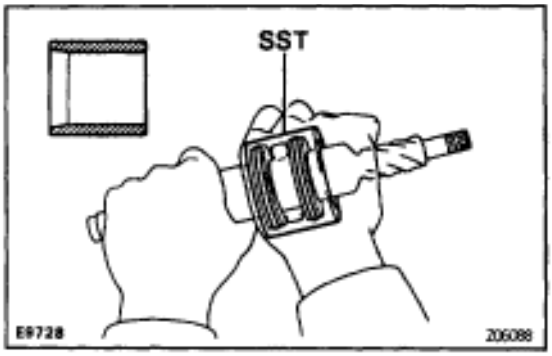

7. IF NECESSARY, REPLACE PRESSURE CONTROL VALVE ASSEMBLY

(a) Using a hexagon wrench (6 mm), remove the 3 bolts.

(b) Remove the 3 O–rings from the control valve housing.

(c) Coat 3 new O–rings with power steering fluid, and install them.

(d) Using a hexagon wrench (6 mm), install a new valve assembly with the 3 bolts.
Torque: 18 N·m (185 kgf·cm, 13 ft·lbf)

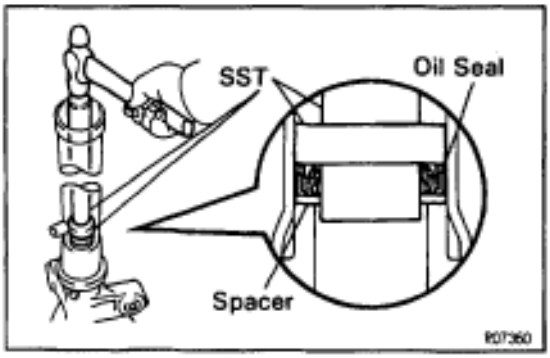

POWER STEERING GEAR ASSEMBLY

NOTICE: When using a vise, do not overtighten it.

1. COAT WITH POWER STEERING FLUID OR MOLYBDENUM DISULPHIDE LITHIUM BASE GREASE (See page SR–34 and SA–35)

2. INSTALL SPACER AND OIL SEAL

(a) Coat a new oil seal lip with power steering fluid.

(b) Using SST and a hammer, softly tap in the oil seal.
SST 09631–12020, 09631–22070

NOTICE:

- **Make sure you install the oil seal facing the correct direction.**
- **Take care that the oil seal does not get reversed as you install it.**

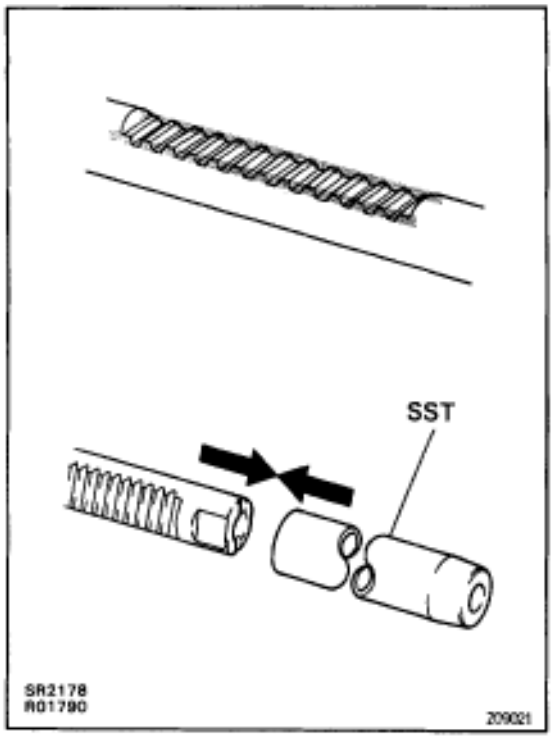

3. INSTALL STEERING RACK

(a) Install SST to the rack.
HINT: If necessary, scrape the burrs off the rack teeth end and burnish.
SST 09631–20102

(b) Coat SST with power steering fluid.

(c) Install the rack into the cylinder.

(d) Remove SST.

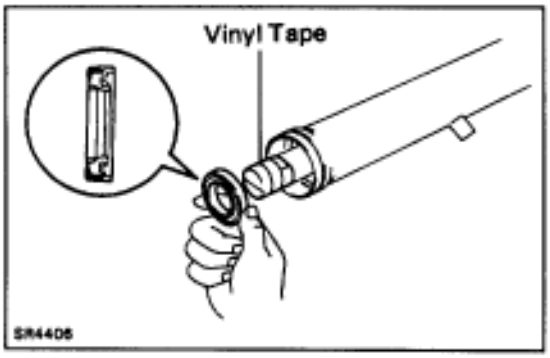

4. INSTALL OIL SEAL

(a) To prevent oil seal lip damage, wind vinyl tape on the steering rack, and apply power steering fluid.

(b) Coat a new oil seal lip with power steering fluid.

(c) Install the oil seal by pushing it into the rack housing without tilting.
NOTICE: Make sure you install the oil seal facing the correct direction.

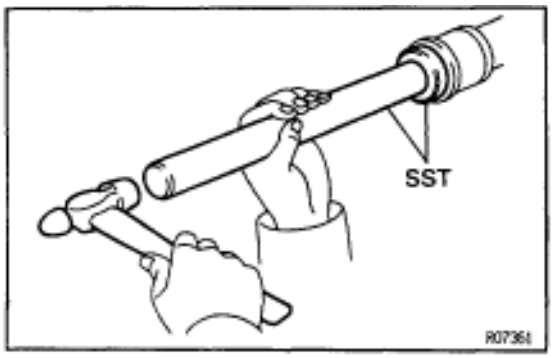

5. INSTALL 2 SPACERS AND CYLINDER END STOPPER

(a) Using SST, drive in the stopper.
SST 09620–30010 (09627–30010, 09631–00020)

(b) Using snap ring pliers, install a new snap ring to the rack housing.

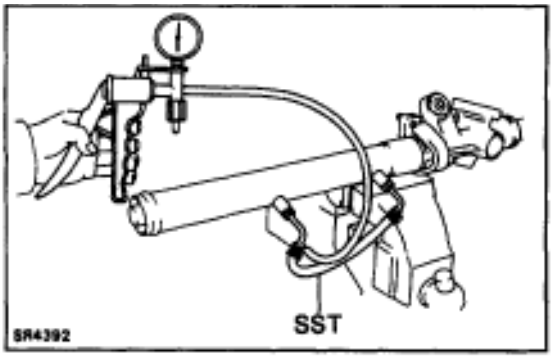

6. AIR TIGHTNESS TEST

(a) Install SST to the unions of the rack housing.
SST 09631–12071
NOTICE: Do not install union seats.

(b) Apply 53.3 kPa (400 mmHg, 15.75 in.Hg) of vacuum for about 30 seconds.

(c) Check that there is no change in the vacuum.
If there is change in the vacuum, check the installation of the oil seals.

7. INSTALL CONTROL VALVE ASSEMBLY

(a) Coat the teflon rings, with power steering fluid.

(b) Push the valve assembly into the rack housing.

8. INSTALL CONTROL VALVE HOUSING

(a) Coat a new O–ring with power steering fluid, and install it to the housing.

(b) To prevent oil seal lip damage, wind vinyl tape on the serrated part of the control valve shaft.

(c) Using a hexagon wrench (6 mm), torque the 2 bolts.
Torque: 18 N·m (185 kgf·cm, 13 ft·lbf)

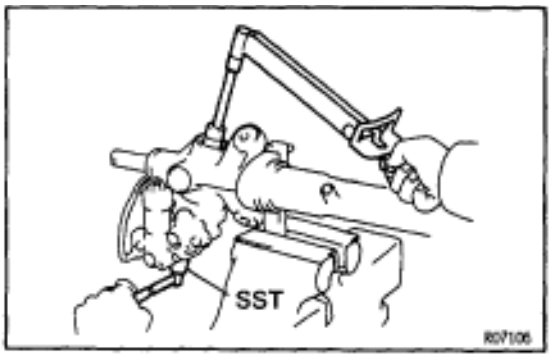

9. INSTALL SPACER, BEARING AND SELFLOCKING NUT
Using SST to stop the control valve shaft rotating, torque a new nut.
SST 09616–00010
Torque: 39 N·m (400 kgf·cm, 29 ft·lbf)

10. INSTALL RACK HOUSING CAP

(a) Apply sealant to 2 or 3 threads of the cap.
Sealant:
Part No. 08833–00080, THREE BOND 1344, LOCTITE 242 or equivalent

(b) Torque the cap.
Torque: 69 N·m (700 kgf·cm, 50 ft·lbf)

11. INSTALL RACK GUIDE SEAT, RACK GUIDE, RACK GUIDE SPRING AND RACK GUIDE SPRING CAP

(a) Install the seat to the guide.

(b) Apply sealant to 2 or 3 threads of the cap.
Sealant:
Part No. 08833–00080, THREE BOND 1344, LOCTITE 242 or equivalent

(c) Temporarily install the cap.

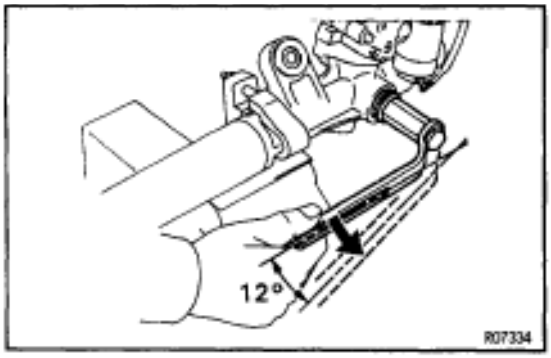

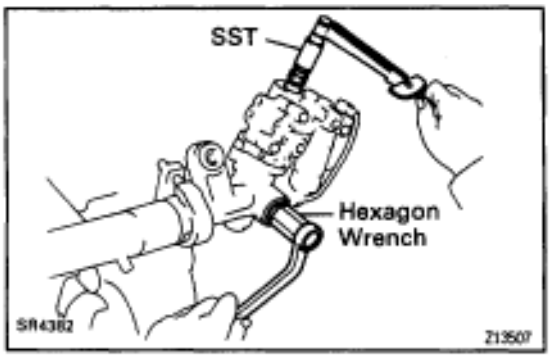

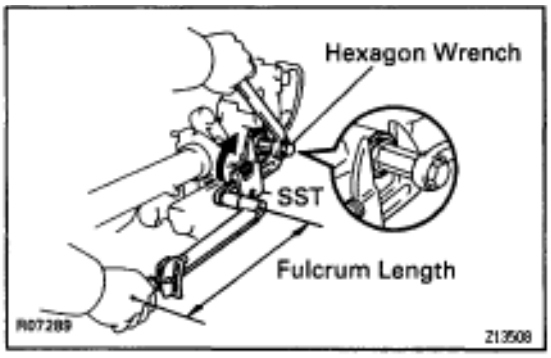

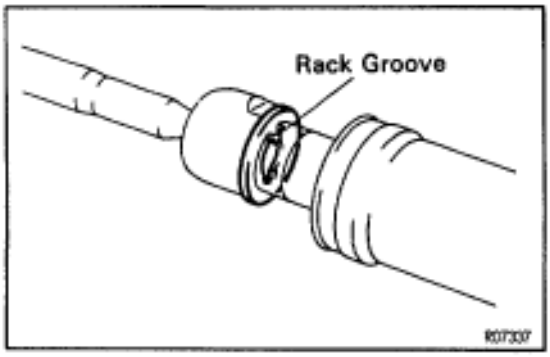

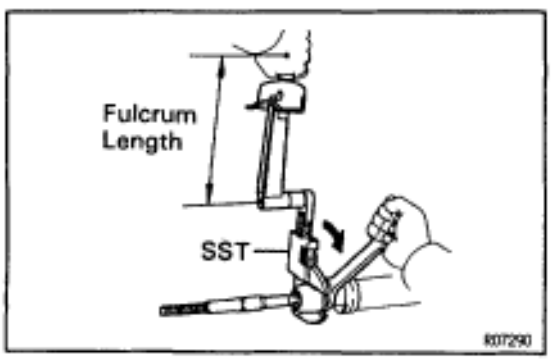

12. ADJUST TOTAL PRELOAD

(a) Using a hexagon wrench (24 mm), torque the rack guide spring cap.

Torque: 25 N·m (250 kgf·cm, 18 ft·lbf)

(b) Using a hexagon wrench (24 mm), return the cap 125

(c) Using SST, turn the control valve shaft right and left 1 or 2 times.

SST 09616–00010

(d) Using a hexagon wrench (24 mm), loosen the cap until the rack guide spring is not functioning.

(e) Using SST, a torque wrench and hexagon wrench (24 mm), tighten the cap until the preload is within specification.

SST 09616–00010

Preload (turning):

1.0–1.9 N·m (10–20 kgf·cm, 8.7–17.4 in.·lbf)

13. INSTALL RACK GUIDE SPRING CAP LOCK NUT

(a) Apply sealant to 2 or 3 threads of the nut.

Sealant:

Part No. 08833–00080, THREE BOND 1344, LOCTITE 242 or equivalent

(b) Using SST and hexagon wrench (24 mm), torque the nut.

SST 09922–10010

Torque: 56 N·m (567 kgf·cm, 41 ft·lbf)

NOTICE: Use SST 09922–10010 in the direction shown in the illustration.

HINT: Use a torque wrench with a fulcrum length of 340 mm (13.39 in.)

(c) Recheck the total preload.

Preload (turning):

1.0–1.9 N·m (10–20 kgf·cm, 8.7–17.4 in.·lbf)

14. INSTALL DUST COVER

15. INSTALL RH AND LH CLAW WASHERS AND RACK ENDS

(a) Install a new washer, and temporarily install the rack end.

HINT: Align the claws of the washer with the rack grooves.

(b) Using a spanner (22 mm) to hold the steering rack, and using SST, torque the rack end.

SST 09922–10010

Torque: 90 N·m (914 kgf·cm, 66 ft·lbf)

NOTICE: Use SST 09922–10010 in the direction shown in the illustration.

HINT: Use a torque wrench with a fulcrum length of 380 mm (14.96 in.)

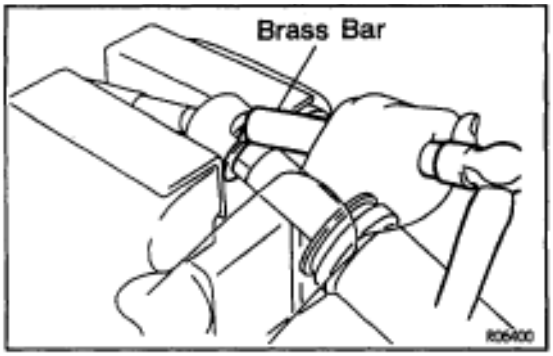

(c) Using a brass bar and hammer, stake the washer.
NOTICE: Avoid any impact to the rack.

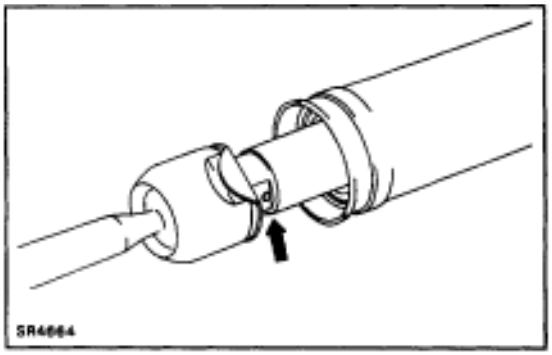

16. INSTALL RH AND LH RACK BOOTS, CLAMPS AND CLIPS

(a) Ensure that the steering rack hole is not clogged with grease.
HINT: If the hole is clogged, the pressure inside the boot will change after it is assembled and the steering wheel turned.

(b) Install the boot.
NOTICE: Be careful not to damage or twist the boot.

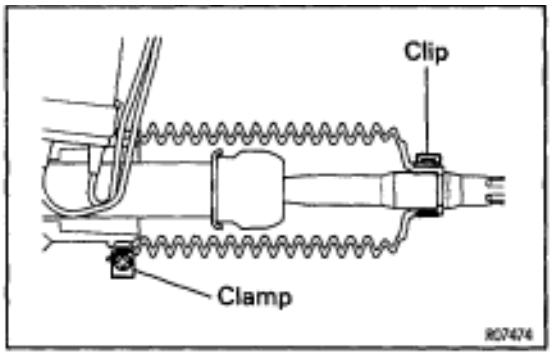

(c) Install the clamp and clip to the boot.
HINT: When the rack guide spring cap is towards you, install the clip and clamp in the positions shown in the illustration.

17. INSTALL TIE ROD ENDS

(a) Screw the lock nut and tie rod end onto the rack end until the matchmarks are aligned.

(b) After adjusting toe–in, torque the nut.
Torque: 56 N·m (570 kgf·cm, 41 ft·lbf)

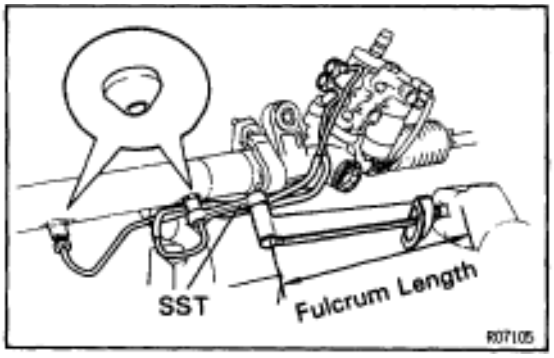

18. INSTALL TURN PRESSURE TUBES

(a) Install 2 new union seats.

(b) Using SST, install the 2 tubes.
SST 09633–00020
Torque: 24 N·m (243 kgf·cm, 17 ft·lbf)
HINT: Use a torque wrench with a fulcrum length of 300 mm (11.81 in.)

(c) Torque the 2 union bolts over 4 new gaskets.
Torque: 34 N·m (350 kgf·cm, 25 ft·lbf)

POWER STEERING GEAR INSTALLATION

1. INSTALL POWER STEERING GEAR ASSEMBLY

(a) Temporarily install the 2 bolts and nuts.

(b) After installing the rack housing bracket and grommet, torque the 2 bolts and nuts.
Torque: 75 N·m (770 kgf·cm, 55 ft·lbf)

2. **INSTALL RACK HOUSING BRACKET AND GROMMET**
   Torque the 2 bolts and nuts.
   Torque: 75 N·m (770 kgf·cm, 55 ft·lbf)
3. **CONNECT PPS SOLENOID CONNECTOR**
4. **CONNECT PRESSURE FEED TUBE**
   Torque the union bolt over a new gasket.
   Torque: 49 N·m (500 kgf·cm, 36 ft·lbf)
5. **CONNECT RETURN TUBE**
   Torque the union bolt over 2 new gaskets.
   Torque: 49 N·m (500 kgf·cm, 36 ft·lbf)
6. **CONNECT RH AND LH TIE ROD ENDS**
   (See page SA–17)
7. **CONNECT INTERMEDIATE SHAFT**
   (See page SR–21)
8. **INSTALL FR SUSPENSION MEMBER PROTECTOR**
   Torque the 4 bolts.
9. **INSTALL ENGINE UNDER COVER**
   Install the 10 screws.
10. **BLEED POWER STEERING SYSTEM**
    (See page SR–9)
11. **CHECK FRONT WHEEL ALIGNMENT**
    (See page SA–4)

ELECTRONIC CONTROL SYSTEM

TROUBLESHOOTING FLOW–CHART

Trouble Symptom

- **Hard steering at idle or low–speed driving.**
- **Steering too sensitive during high–speed driving.**

Preliminary Check

- **Check tire pressure.**
- **Check lubrication of suspension and steering linkage.**
- **Check front wheel alignment.**
- **Check steering system joint and suspension arm ball joint.**
- **Check for bent steering column.**
- **Check that all connectors are secure.**
- **Check PS pump fluid pressure. (See page SR–37)**

Turn ignition switch on.

Is ECU–IG fuse normal? — No → Replace fuse. Is operation normal? — No → Short circuit in wire harness between fuse and ECU terminal +B.

Yes → Fuse faulty.

Yes → Disconnect the ECU connector.

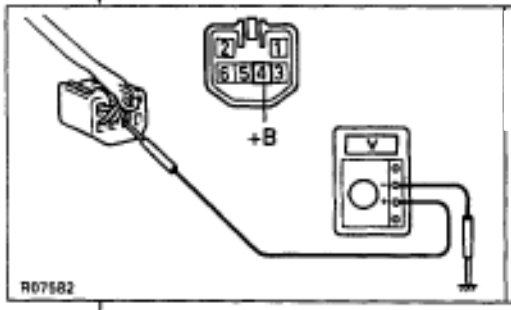

Check 1.
Check that there is battery voltage (10 — 14V) between the ECU terminal +B and body ground.

Yes → CONTINUED ON NEXT PAGE

No → Open circuit in wire harness between the fuse and ECU terminal +B.

Yes

CONTINUED FROM PREVIOUS PAGE

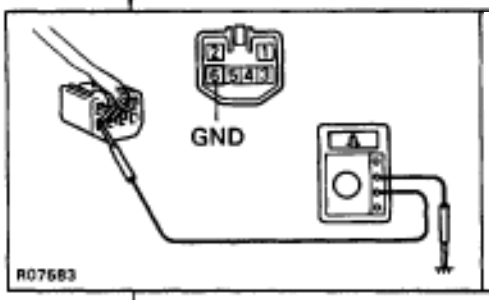

Check 2.
Check that there is continuity between the ECU terminal GND and body ground.

Yes

No

- Open circuit in wire harness between the ECU terminal GND and body ground.
- Body ground faulty.

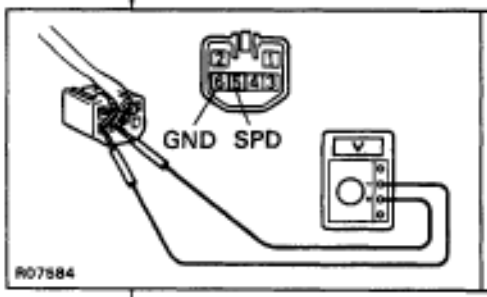

Check 3.
(a) Jack up one of the rear wheels.
(b) Connect a voltmeter between the ECU connector terminals SPD and GND.
(c) Spin the rear wheel and check that the meter needle deflects 0 V → 5 V or more → 0 V.

Yes

No

- Open or short circuit in wire harness between the ECU terminal SPD and speed sensor.
- Speed sensor faulty (See BE section.)

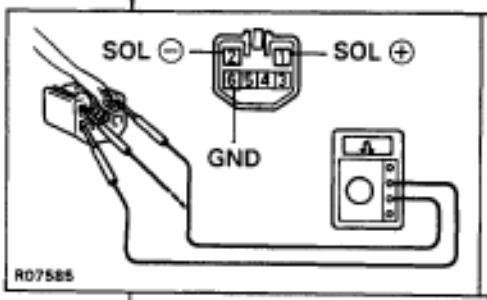

Check 4.
Check that there is no continuity between terminals SOL (+) or SOL (–) and GND.

Yes

No

- Short circuit in wire harness between the terminals SOL (+) and SOL (–).
- Solenoid valve faulty.

CONTINUED ON NEXT PAGE

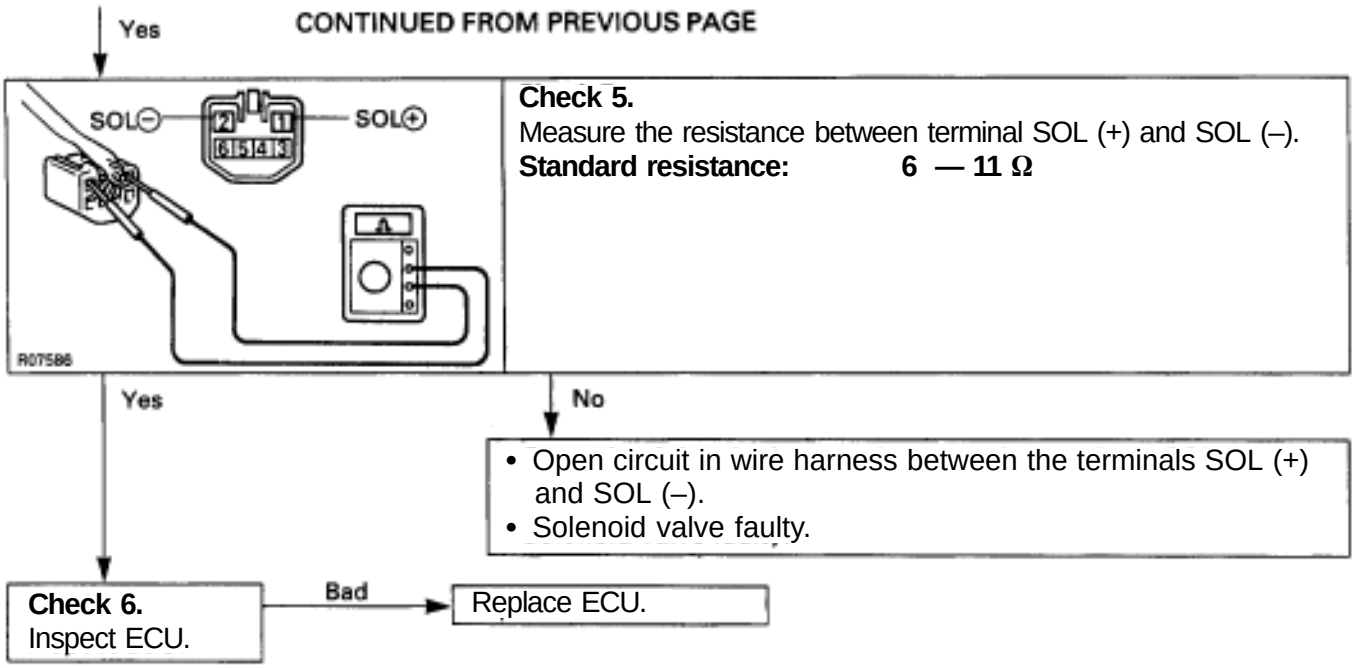

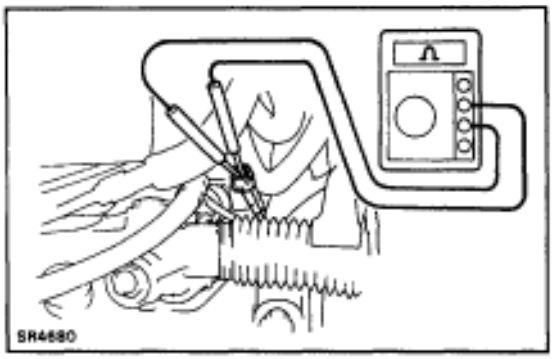

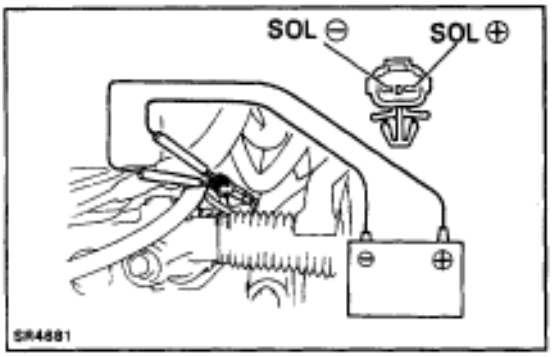

PPS SOLENOID VALVE INSPECTION

1. DISCONNECT PPS SOLENOID CONNECTOR
(See page SR–33)

2. MEASURE RESISTANCE
Measure the resistance between SOL ⊕ and SOL ⊖.
Resistance:
6–11 Ω

3. CHECK PPS SOLENOID OPERATION

(a) Connect the battery positive terminal to the solenoid terminal SOL ⊕.

(b) Connect the battery negative terminal to the solenoid terminal SOL ⊖.

(c) Check that the solenoid makes a 'clicks' sound.
If faulty, replace the pressure control valve with the solenoid valve.
NOTICE:
- **Do not apply voltage for more than 30 seconds to avoid burning out the solenoid.**
- **If repeating this step, wait until the solenoid cools down enough that it can be touched by hand.**

4. CONNECT PPS SOLENOID CONNECTOR

PPS ECU INSPECTION

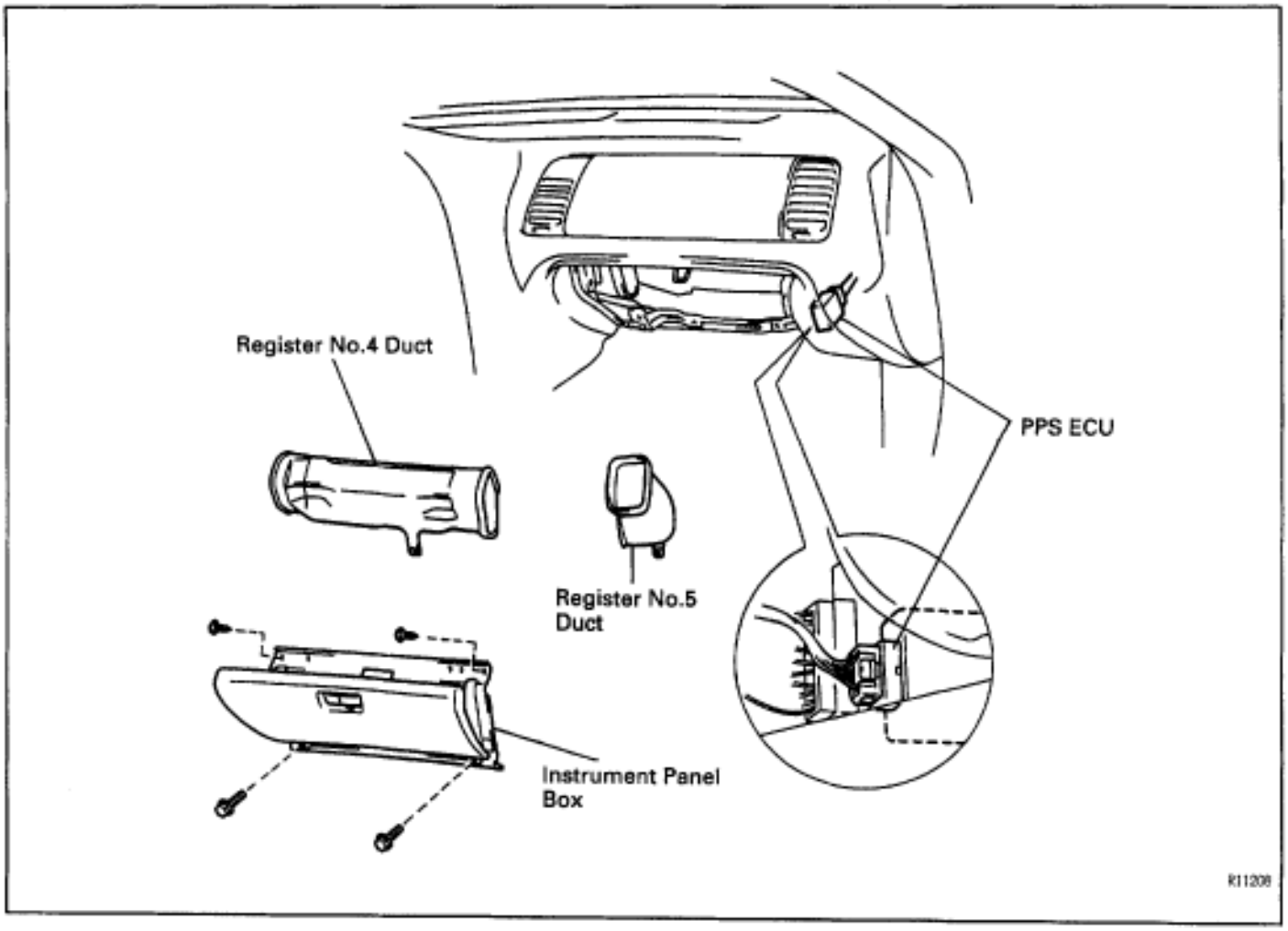

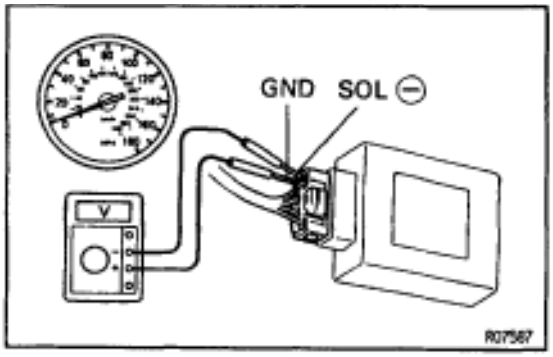

1. JACK UP VEHICLE AND SUPPORT IT ON STANDS

2. START ENGINE

3. MEASURE VOLTAGE OF ECU

(a) Using a voltmeter, measure the voltage between ECU terminals SOL ⊖ and GND while the engine is idling.

Standard voltage:

0.15–0.20 V

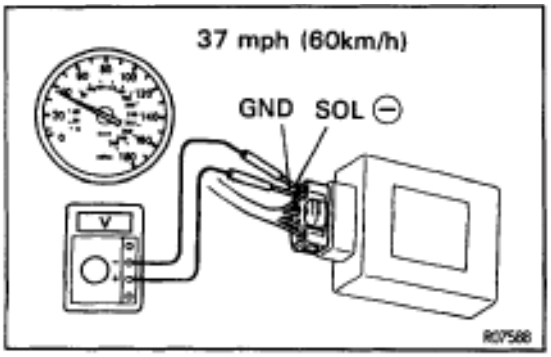

(b) Place the transmission in gear and while running at about 37 mph (60 km/h), measure the voltage between ECU terminals SOL ⊖ and GND.

Standard voltage:

Voltage measured in (a) above, minus

2JZ–GE: 0.02–0.08 V

2JZ–GTE: 0.01–0.07 V

If no voltage, try another ECU.

4. LOWER VEHICLE

SERVICE SPECIFICATIONS

SERVICE DATA

Steering wheel freeplay	Maximum	30 mm (1.18 in.)
STEERING COLUMN		
Pawl stopper	Mark	
	1 or A	12.68–12.74 mm (0.4992–0.5016 in.)
	2 or B	12.61–12.67 mm (0.4965–0.4988 in.)
	3 or C	12.54–12.60 mm (0.4937–0.4961 in.)
	4 or D	12.47–12.53 mm (0.4909–0.4933 in.)
	5 or E	12.40–12.46 mm (0.4882–0.4906 in.)
	6 or F	12.33–12.39 mm (0.4854–0.4878 in.)
	7 or G	12.26–12.32 mm (0.4827–0.4850 in.)
PS ON–VEHICLE INSPECTION		
Maximum rise of oil level		Below 5 mm (0.20 in.)
Oil pressure at idle speed with valve closed	Minimum	7,845 kPa (80 kgf/cm^2, 1,140 psi)
Steering effort at idle speed	Maximum	0.4 N·m (3.6 kgf·cm, 3.1 in.·lbf)
PS VANE PUMP		
Rotor shaft bushing oil clearance	STD	0.03–0.05 mm (0.0012–0.0020 in.)
Rotor shaft bushing oil clearance	Maximum	0.07 mm (0.0028 in.)
Vane plate to rotor groove clearance	Maximum	0.03 mm (0.0012 in.)
Vane plate height	Minimum	8.6 mm (0.339 in.)
Vane plate thickness	Minimum	1.40 mm (0.0551 in.)
Vane plate length	Minimum	14.99 mm (0.5902 in.)
Vane plate length	Rotor and cam ring mark	
	NONE	14.999–15.001 mm (0.59051–0.59059 in.)
	1	14.997–14.999 mm (0.59043–0.59051 in.)
	2	14.995–14.997 mm (0.59035–0.59043 in.)
	3	14.993–14.995 mm (0.59027–0.59035 in.)
	4	14.991–14.993 mm (0.59020–0.59027 in.)
Flow control spring length	Minimum	33 mm (1.30 in.)
Pump rotating torque		0.2 N·m (2.5 kgf·cm, 2.2 in.·lbf) or less
PS GEAR HOUSING		
Steering rack runout	Maximum	0.30 mm (0.0118 in.)
Total preload		1.0–1.9 N·m (10–20 kgf·cm, 8.7–17.4 in.·lbf)
Solenoid valve resistance		6–11 Ω

TORQUE SPECIFICATIONS

Part tightened	N·m	kgf·cm	ft·lbf
STEERING COLUMN			
Steering wheel set nut	35	360	26
Steering wheel pad set screw	7.1	72	62 in.·lbf
Column assembly set nut	25	260	19
Intermediate shaft x Sliding yoke	35	360	26
Tilt memory bolt x Square nut	6.4	65	56 in.·lbf
Tilt lever assembly set screw	4.7	48	42 in.·lbf
Tilt pawl set nut	5.9	60	52 in.·lbf
Tilt lever retainer set nut	15	150	11
Tilt memory bolt set nut	5.9	60	52 in.·lbf
Turn signal bracket set bolt	8.8	90	78 in.·lbf
Sliding yoke	35	360	26
Compression set screw	6.4	65	56 in.·lbf
PS VANE PUMP			
PS vane pump set bolt	58	590	42
Union bolt	49	500	36
Vane pump pulley set nut	43	440	32
Front housing x Rear housing	17	170	12
Pressure port union	83	850	61
Oil reservoir set bolt (2JZ–GE) Front side bolt	13	130	9
Rear side bolts	17	170	12
Suction port union set bolt (2JZ–GTE)	13	130	9
PS GEAR HOUSING			
Tie rod end x Steering knuckle	49	500	36
Control valve shaft x Intermediate shaft	35	360	26
Pressure feed and return tube set union bolts	49	500	36
Gear housing set bolt and nut	75	770	55
Pressure control valve assembly x Control valve housing	18	185	13
Control valve housing set bolt	18	185	13
Self–locking nut	39	400	29
Rack housing cap	69	700	501
Rack guide spring cap lock nut	56	567	41
Rack end	90	914	66
Tie rod end lock nut	56	570	41
Turn pressure tube union nut	24	243	17
Turn pressure tube union bolt	34	350	25

SUPPLEMENTAL RESTRAINT SYSTEM

GENERAL DESCRIPTION

The SUPRA is equipped with an SRS (Supplemental Restraint System), which comprises a driver airbag, and front passenger airbag if fitted. Failure to carry out service operations in the correct sequence could cause the SRS to unexpectedly deploy during servicing, possibly leading to a serious accident. Further, if a mistake is made in servicing the SRS, it is possible the SRS may fail to operate when required. Before performing servicing (including removal or installation of parts, inspection or replacement), be sure to read the following items carefully, then follow the correct procedure described in the repair manual.

1. Malfunction symptoms of the SRS are difficult to confirm, so the diagnostic trouble codes become the most important source of information when troubleshooting. When troubleshooting the SRS, always inspect the diagnostic trouble codes before disconnecting the battery.
   (See page RS–44)
2. **Work must be started after 90 seconds from the time the ignition switch is turned to the "LOCK" position and the negative (–) terminal cable is disconnected from the battery.**
   (The SRS is equipped with a back–up power source so that if work is started within 90 seconds of disconnecting the negative (–) terminal cable from the battery, the SRS may deploy.)
   When the negative (–) terminal cable is disconnected from the battery, memory of the clock and audio systems will be canceled. So before starting work, make a record of the contents memorized by the audio memory system. When work is finished, reset the audio systems as before and adjust the clock. To avoid erasing the memory of each memory system, never use a back–up power supply from outside the vehicle.
3. Even in cases of a minor collision where the SRS does not deploy, the steering wheel pad, front passenger airbag assembly, front airbag sensors and center airbag sensor assembly should be inspected.
   (See pages RS–10, 20, 30, and 33)
4. Never use SRS parts from another vehicle. When replacing parts, replace them with new parts.
5. Before repairs, remove the airbag sensors if shocks are likely to be applied to the sensors during repairs.
6. Never disassemble and repair the steering wheel pad, front passenger airbag assembly, front airbag sensors or center airbag sensor assembly in order to reuse it.
7. If the steering wheel pad, front passenger airbag assembly, front airbag sensors or center airbag sensor assembly have been dropped, or if there are cracks, dents or other defects in the case, bracket or connector, replace them with new ones.
8. Do not expose the steering wheel pad, front passenger airbag assembly, front airbag sensors or center airbag sensor assembly directly to hot air or flames.
9. Use a volt/ohmmeter with high impedance (10 kΩ/V minimum) for troubleshooting the system's electrical circuits.
10. Information labels are attached to the periphery of the SRS components. Follow the instructions on the notices.
11. After work on the SRS is completed, check the SRS warning light.
    (See page RS–44)
12. If the vehicle is equipped with a mobile communication system, refer to the precaution in the IN section.

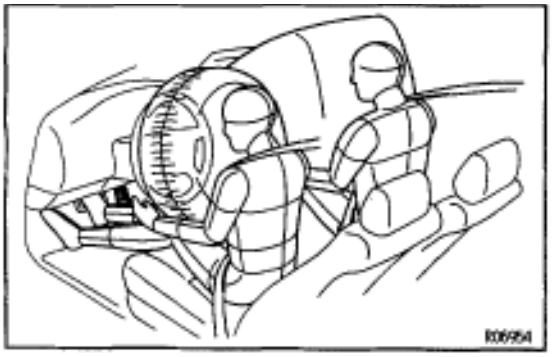

DESCRIPTION

This vehicle is equipped with an SRS (Supplemental Restraint System) which comprises a driver airbag, and front passenger airbag if fitted. Where fitted, it is designed to be of benefit only in conjunction with the front seat belt(s) being worn. In a collision, if the shock is greater than a specified value, the airbag(s) stored in the steering wheel pad and front passenger airbag assembly are inflated instantaneously.

LOCATION OF COMPONENTS

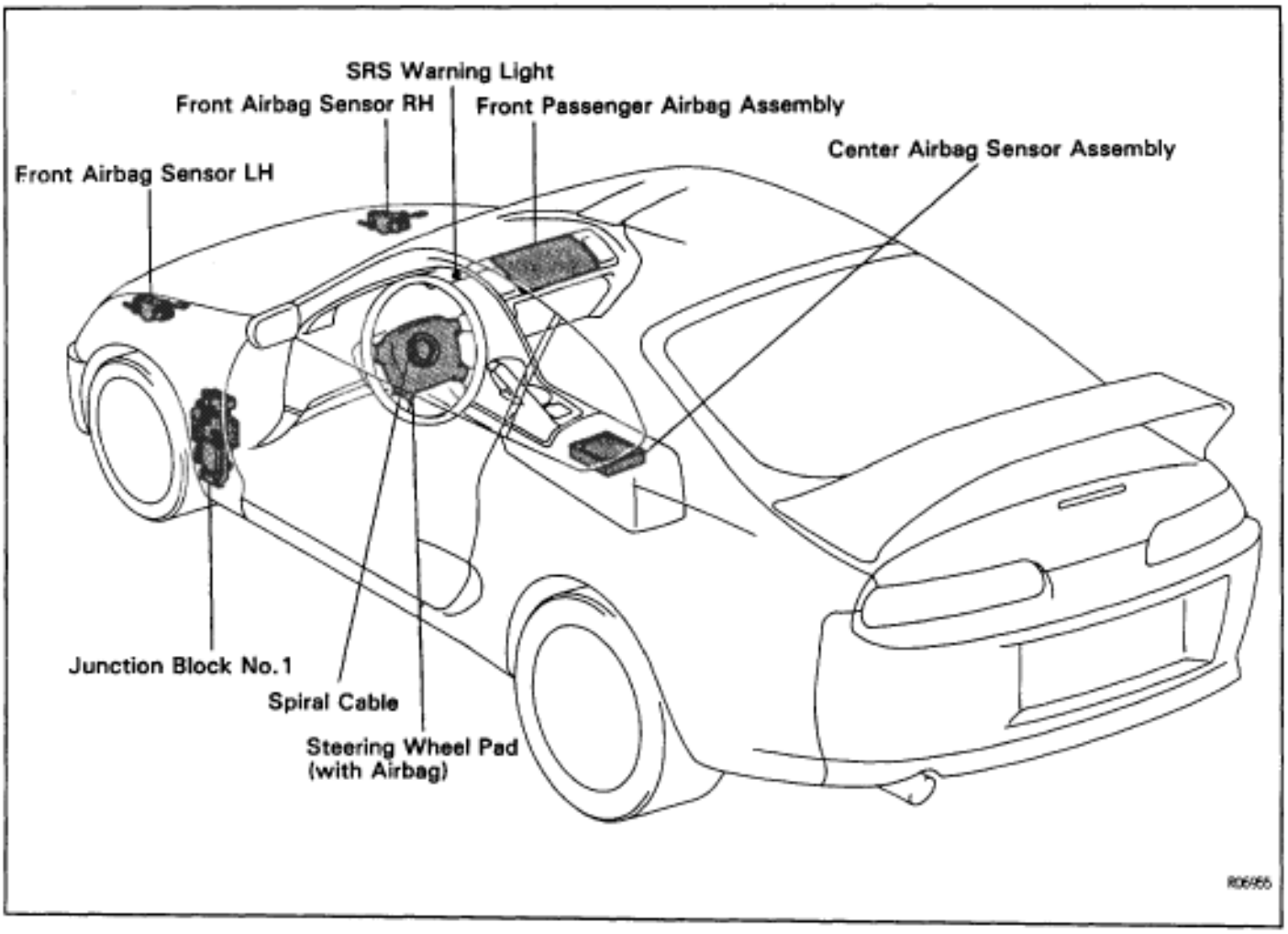

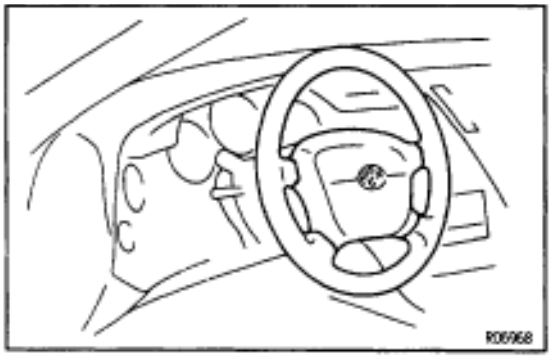

OPERATION

FUNCTION OF COMPONENTS

1. STEERING WHEEL PAD (with AIRBAG)

The inflater and bag of the SRS are stored in the steering wheel pad and cannot be disassembled. The inflater contains a squib, igniter charge, gas generant, etc., and inflates the bag when instructed by the center airbag sensor assembly.

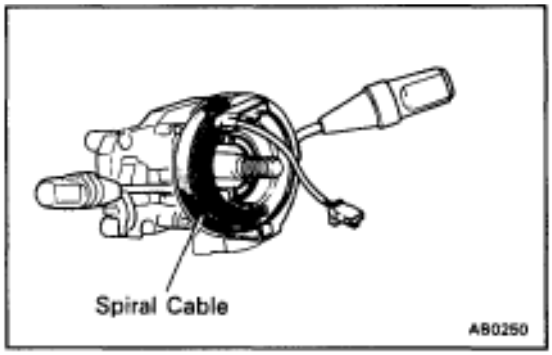

2. SPIRAL CABLE (in COMBINATION SWITCH)

A spiral cable is used as an electrical joint from the vehicle body side to the steering wheel.

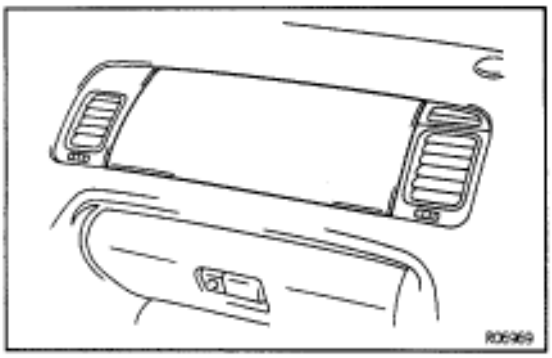

3. FRONT PASSENGER AIRBAG ASSEMBLY

The inflater and bag of the SRS are stored in the front passenger airbag assembly and cannot be disassembled.
The inflater contains a squib, igniter charge, gas generant, etc., and inflates the bag when instructed by the center airbag sensor assembly.

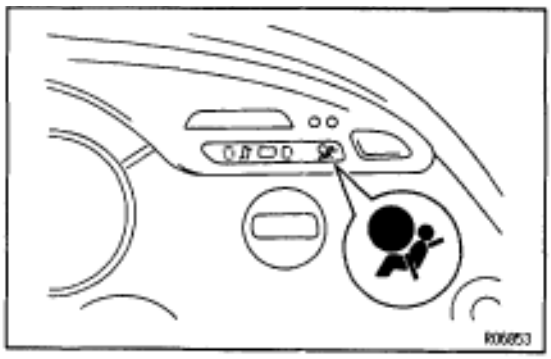

4. SRS WARNING LIGHT

The SRS warning light is located on the cluster finish panel. It goes on to alert the driver of trouble in the system when a malfunction is detected in the center airbag sensor assembly. In normal operating conditions when the ignition switch is turned to the ACC or ON position, the light goes on for about 6 seconds and then goes off.

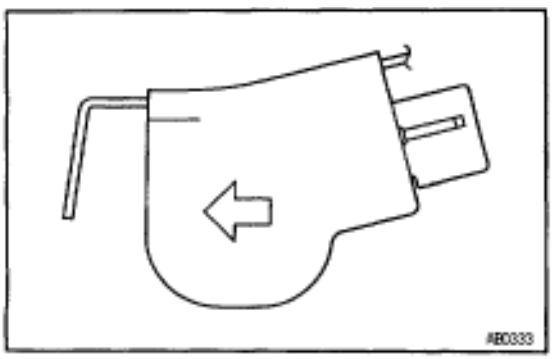

5. FRONT AIRBAG SENSOR

A front airbag sensor is mounted inside each of the front fenders. The sensor unit is a mechanical type. When the sensor detects a deceleration force above a predetermined limit, contacts is made in the sensor, sending a signal to the center airbag sensor assembly. The sensor cannot be disassembled.

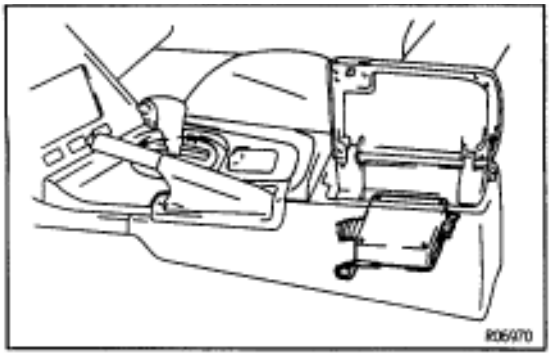

6. CENTER AIRBAG SENSOR ASSEMBLY

The center airbag sensor assembly is mounted on the floor inside the console box. The center airbag sensor assembly consists of a center airbag sensor, safing sensor, diagnosis circuit and ignition control, drive circuit, etc. It receives signals from the airbag sensors and judges whether the SRS must be activated or not.

7. SRS CONNECTORS

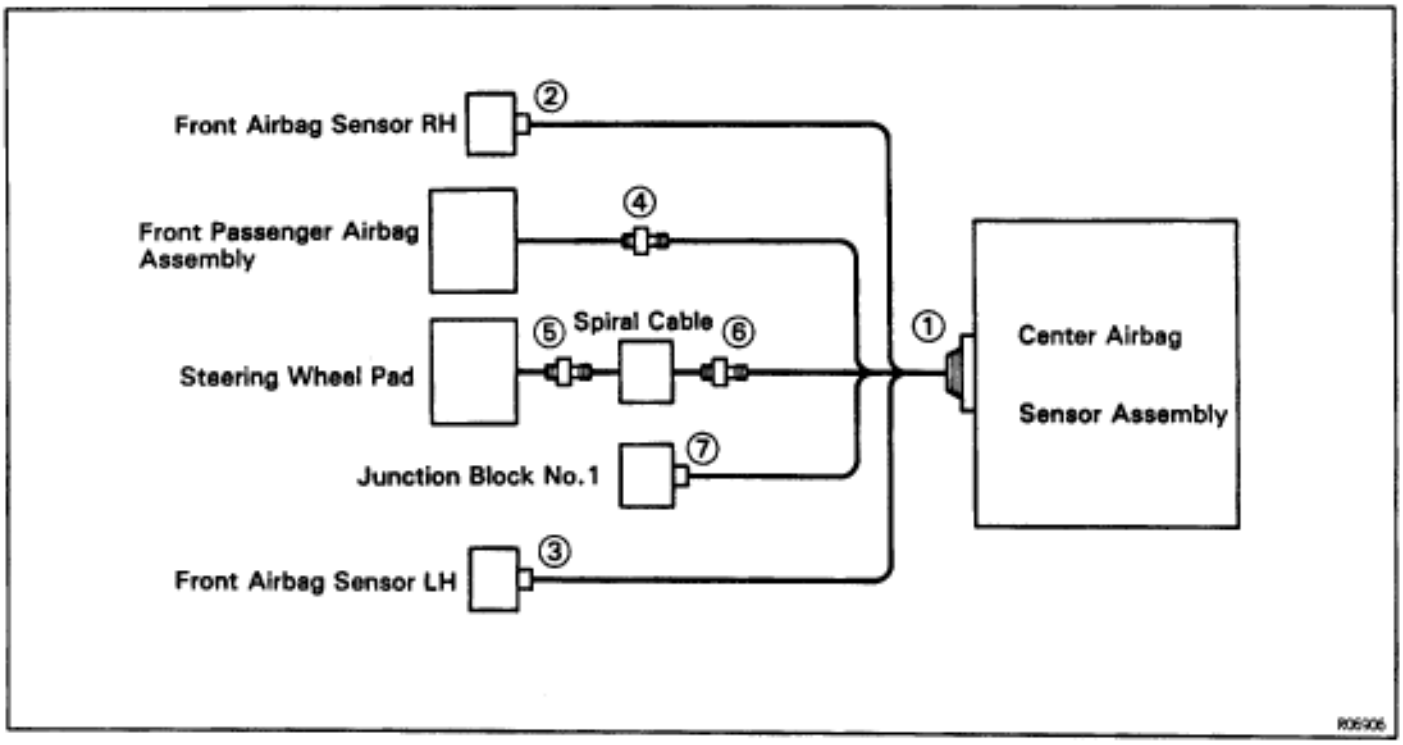

No.	Item	Application
(1)	Terminal Twin–Lock Mechanism	Connectors (1), (2), (3), (4), (5), (6), (7)
(2)	Airbag Activation Prevention Mechanism	Connectors (1), (4), (5), (6)
(3)	Electrical Connection Check Mechanism	Connectors (1), (2), (3)
(4)	Connector Twin–Lock Mechanism	Connectors (4), (5), (6)

All connectors in the SRS are colored yellow to distinguish them from other connectors. Connectors having special functions and specifically designed for SRS are used in the locations shown below to ensure high reliability. These connectors use durable gold–plated terminals.

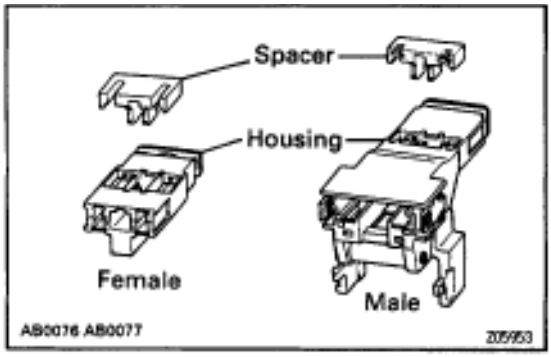

(1) Terminal Twin–Lock Mechanism
Each connector has a two–piece construction consisting of a housing and a spacer. This design secures the locking of the terminal by two locking devices (the spacer and the lance) to prevent terminals from coming out.

(2) Airbag Activation Prevention Mechanism
Each connector contains a short spring plate. When the connector is disconnected, the short spring plate automatically connects the power source and grounding terminals of the squib.

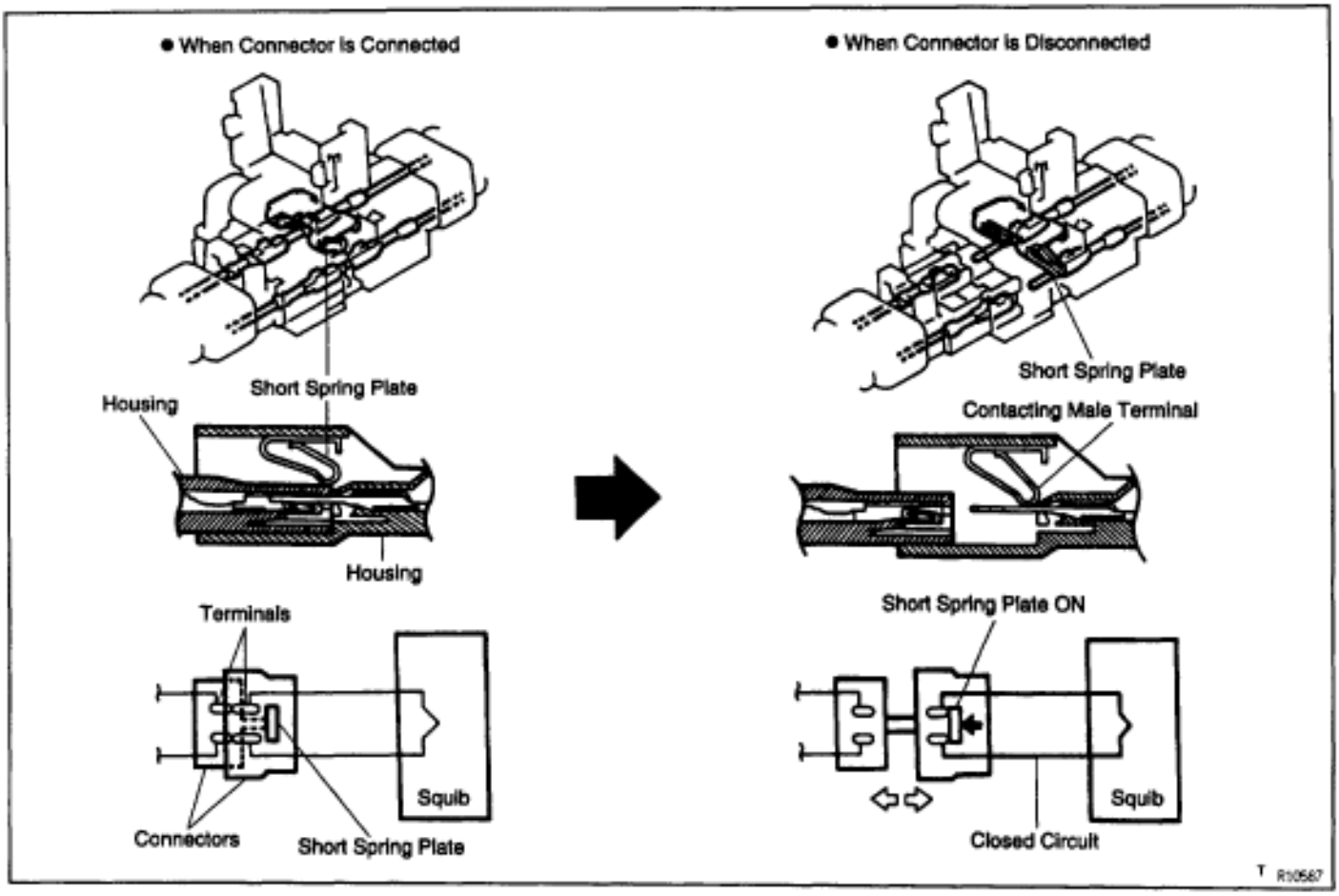

HINT: The illustration shows connectors (4), (5) and (6). Connector (1) has short spring plates on the female terminal side.

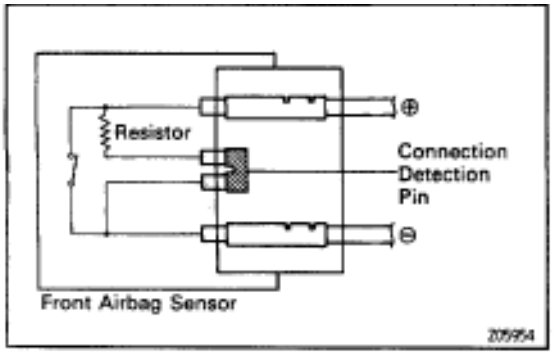

(3) Electrical Connection Check Mechanism

This mechanism is designed to electrically check if connectors are connected correctly and completely. The electrical connection check mechanism is designed so that the connection detection pin connects with the diagnosis terminals when the connector housing lock is in the locked condition.

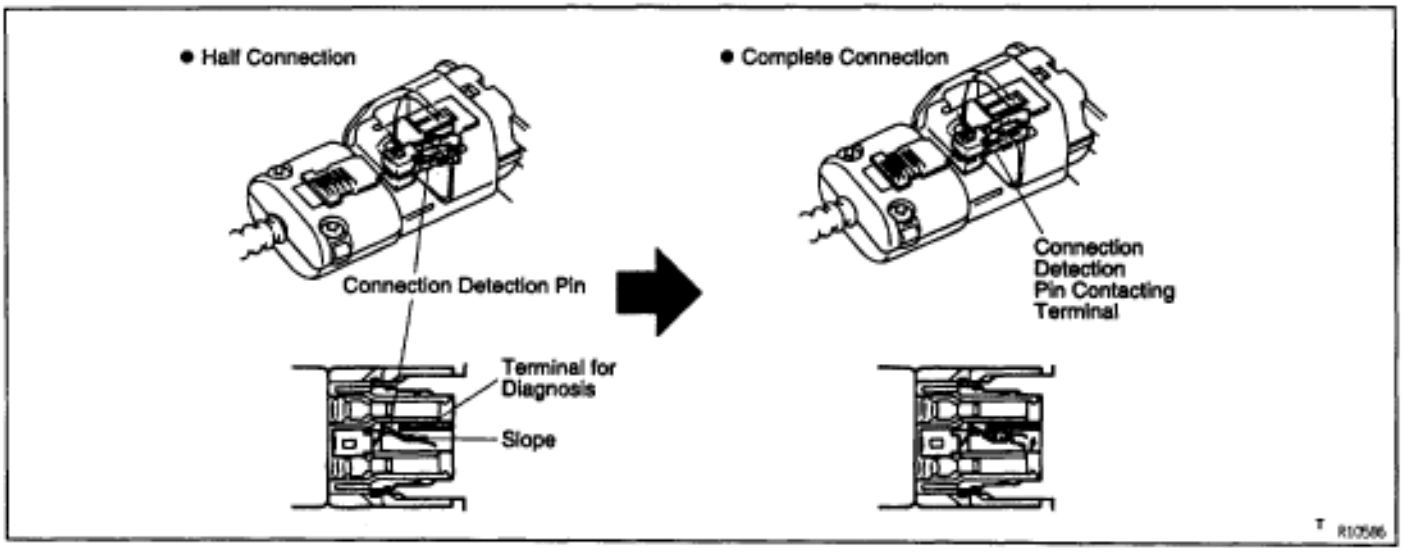

(4) Connector Twin–Lock Mechanism

With this mechanism the male and female connectors are locked by two locking devices to increase connection reliability. If the primary lock is incomplete, ribs interfere and prevent the secondary lock.

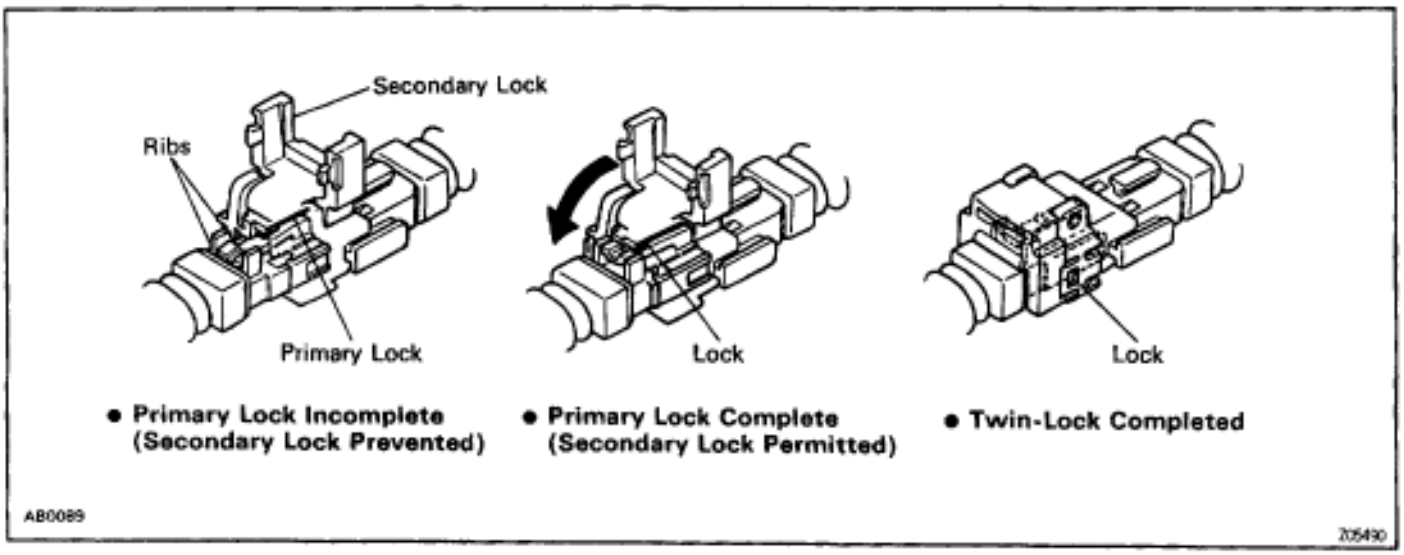

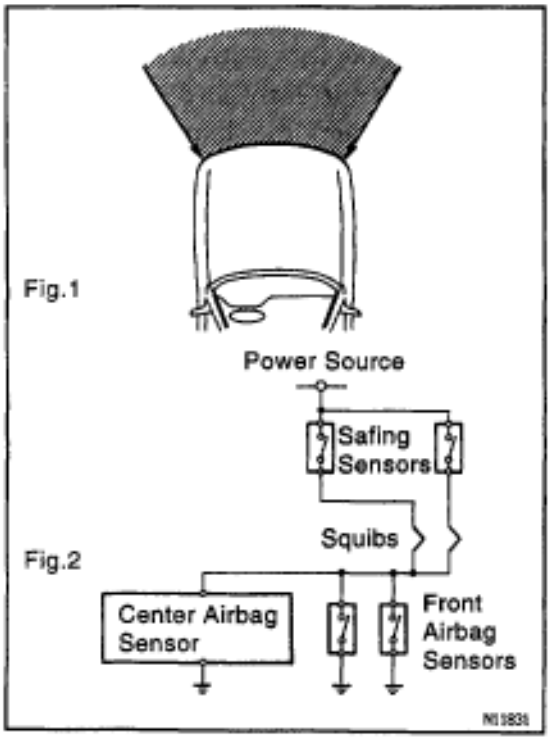

Fig.1

Fig.2

When the vehicle is involved in a frontal collision in the hatched area (Fig. 1) and the shock is larger than a predetermined level, the SRS is activated automatically. A safing sensor is designed to go on at a smaller deceleration rate than the front and center airbag sensors. As illustrated in Fig. 2, ignition is caused when current flows to the squib, which happens when a safing sensor and a front airbag sensor and/or the center airbag sensor go on simultaneously. When a deceleration force acts on the sensors, two squibs in the driver airbag and front passenger airbag ignite and generate gas. The gas discharging into the driver and front passenger airbags rapidly increases the pressure inside the bags, breaking open the steering wheel pad and instrument panel door. Bag inflation then ends, and the bags deflate as the gas is discharged through discharge holes at the bag's rear or side.

PREPARATION

SST (SPECIAL SERVICE TOOLS)

	09082–00700 SRS Airbag Deployment Tool	
	09843–18020 Diagnosis Check Wire	
	09950–50010 Puller C Set	Steering wheel

RECOMMENDED TOOLS

	09042–00010 Torx Socket T30 ◆	Steering wheel pad
	09042–00020 Torx Socket T40 ◆	Center airbag sensor assembly
	09082–00050 TOYOTA Electrical Tester Set ◆	

EQUIPMENT

Torque wrench	
Bolt: Length: 35 mm (1.38 in.) Pitch: 1.0 mm (0.039 in.) Diam.: 6.0 mm (0.236 in.)	Airbag disposal
Tire Width: 185 mm (7.28 in.) Inner diam.: 360mm (14.17 in.)	Airbag disposal
Tire with disc wheel Width: 185 mm (7.28 in.) Inner diam.: 360 mm (14.17 in.)	Airbag disposal
Vinyl bag	Airbag disposal

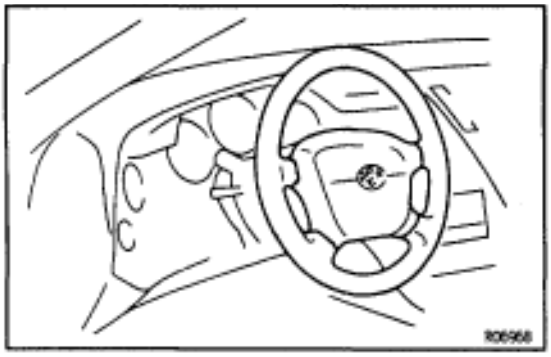

STEERING WHEEL PAD AND SPIRAL CABLE

INSPECTION ITEMS

1. VEHICLES NOT INVOLVED IN A COLLISION

(a) Do a diagnostic system check. (See page RS–44)

(b) Do a visual check which includes the following items with the steering wheel pad (with airbag) installed in the vehicle.

- Check for cuts, minute cracks or marked discoloration of the steering wheel pad top surface and grooved portion.

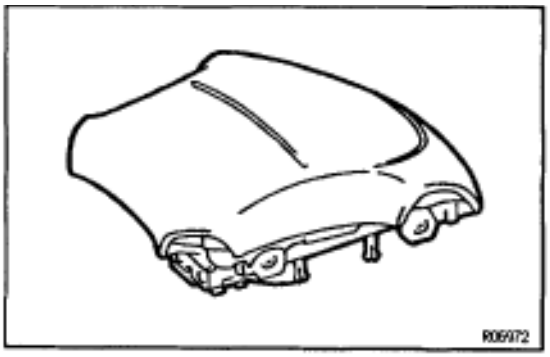

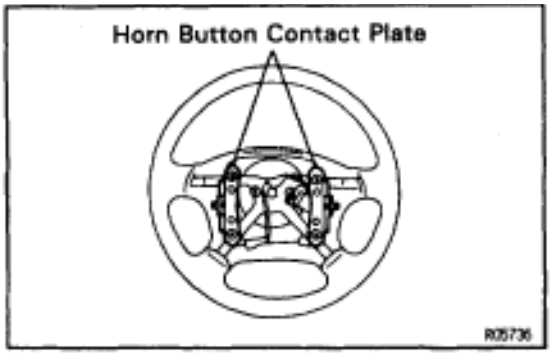

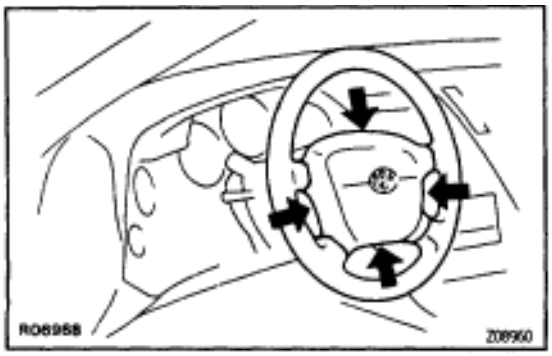

2. VEHICLES INVOLVED IN A COLLISION IF THE AIRBAG IS NOT DEPLOYED

(a) Do a diagnostic system check. (See page RS–44)

(b) Do a visual check which includes the following items with the steering wheel pad (with airbag) removed from the vehicle.

- Check for cuts and cracks in, or marked discoloration of the steering wheel pad top surface and its grooved portion.
- Check for cuts and cracks in wire harnesses, and for chipping in connectors.
- Check for deformation of the horn button contact plate of the steering wheel.

HINT:

- If the horn button contact plate of the steering wheel is deformed, never repair it. Always replace the steering wheel assembly with a new one.
- There should be no interference between the steering wheel pad and the steering wheel, and the clearance should be uniform all the way around when the new steering wheel pad is installed on the steering wheel.

CAUTION: For removal and installation of the steering wheel pad, see page RS–12, "STEERING WHEEL PAD AND SPIRAL CABLE REMOVAL AND INSTALLATION" and be sure to follow the correct procedure.

IF THE AIRBAG IS DEPLOYED

(a) Do a diagnostic system check. (See page RS–44)

(b) Do a visual check which includes the following items with the steering wheel pad (with airbag) removed from the vehicle.

- Check for deformation of the horn button contact plate of the steering wheel.
- Check for damage to the spiral cable connector and wire harness.

HINT:

- If the horn button contact plate of the steering wheel is deformed, never repair it. Always replace the steering wheel assembly with a new one.
- There should be no interference between the steering wheel pad and the steering wheel, and the clearance should be uniform all the way around when the new steering wheel pad is installed on the steering wheel.

REPLACEMENT REQUIREMENTS

In the following cases, replace the steering wheel pad, steering wheel or spiral cable.

- If the airbag has been deployed.
- If the steering wheel pad or spiral cable has been found to be faulty in troubleshooting.
- If the steering wheel pad, steering wheel or spiral cable has been found to be faulty during the check in items 1–(b) or 2–(b).
- If the steering wheel pad has been dropped.

CAUTION: For replacement of the steering wheel pad, see page RS–12, "STEERING WHEEL PAD AND SPIRAL CABLE REMOVAL AND INSTALLATION" and be sure to follow the correct procedure.

COMPONENTS

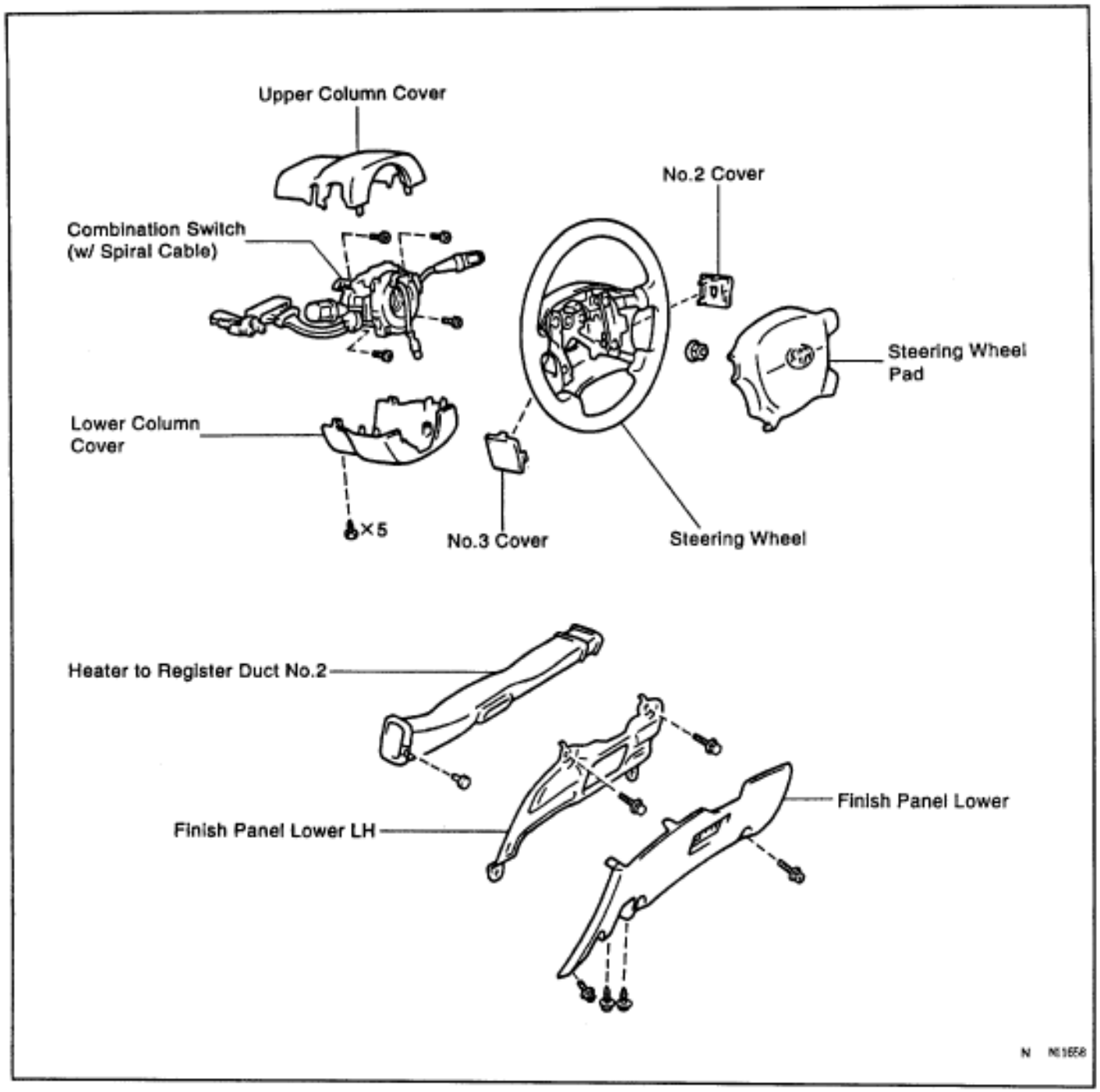

STEERING WHEEL PAD AND SPIRAL CABLE REMOVAL AND INSTALLATION

(See SR section)

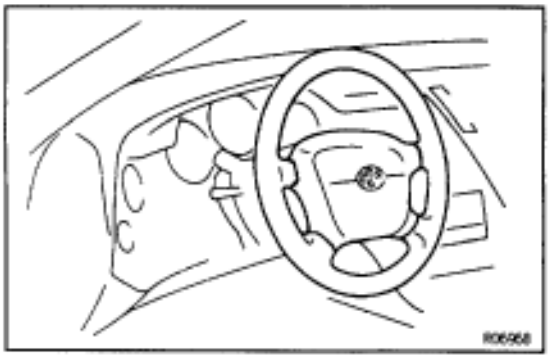

STEERING WHEEL PAD (WITH AIRBAG) DISPOSAL

When scrapping vehicles equipped with an SRS or disposing of a steering wheel pad (with airbag), always first deploy the airbag in accordance with the procedure described below.

If any abnormality occurs with the airbag deployment, contact the SERVICE DEPT. of TOYOTA MOTOR SALES, U.S.A., INC..

Never dispose of a steering wheel pad which has an undeployed airbag.

When disposing of a steering wheel pad with an airbag deployed in a collision, follow the same procedure given under "When scrapping vehicle, step 4. DISPOSAL OF STEERING WHEEL PAD (WITH AIRBAG)".

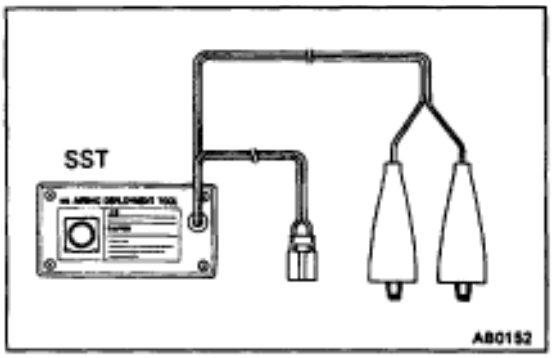

PRECAUTIONS FOR AIRBAG DEPLOYMENT

- The airbag produces a sizeable exploding sound when it deploys, so do the operation out–of–doors and where it will not create a nuisance to nearby residents.
- When deploying the airbag, always use the specified SST: SRS AIRBAG DEPLOYMENT TOOL (SST 09082–00700).
  Carry out the operation in a place away from electrical noise.
- When deploying an airbag, do it from at least 10 m (33 ft) away from the steering wheel pad.
- The steering wheel pad is very hot when the airbag is deployed, so leave it alone for at least 30 minutes after deployment.
- Use gloves and safety glasses when handling a steering wheel pad with a deployed airbag.
- Do not apply water, etc. to a steering wheel pad with a deployed airbag.
- Always wash your hands with water after completing the operation.

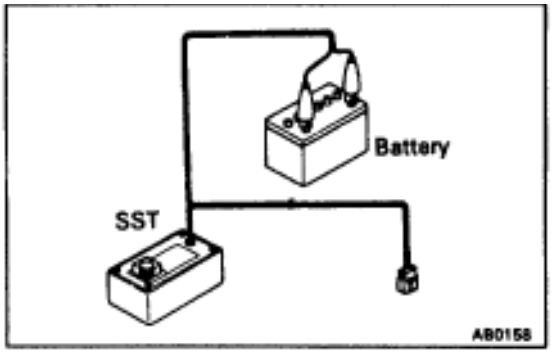

When scrapping vehicle

HINT: Have a battery ready as the power source to deploy the airbag.

1. CONFIRM FUNCTIONING OF SST
(See page RS–19)
SST 09082–00700

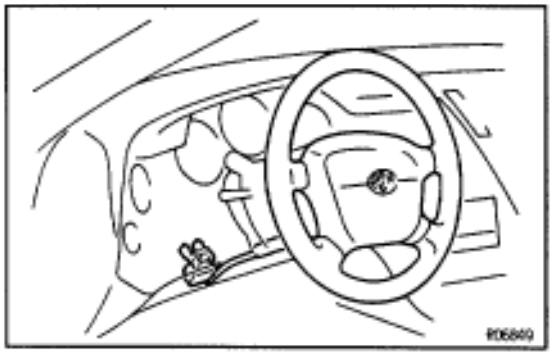

2. INSTALL SST
CAUTION: Check that there is no looseness in the steering wheel and steering wheel pad.
(a) Disconnect the airbag connector of the spiral cable.

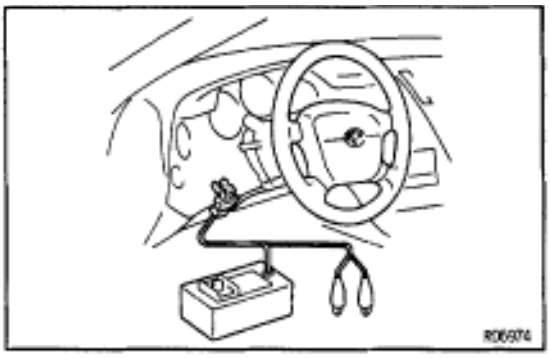

(b) Connect the SST connector to the airbag connector of the spiral cable.
SST 09082–00700
(c) Move the SST to at least 10 m (33 ft) from the front of the vehicle.
(d) Close all the doors and windows of the vehicle.
NOTICE: Take care not to damage the SST wire harness.
(e) Connect the SST red clip to the battery positive (+) terminal and the black clip to the battery negative (–) terminal.

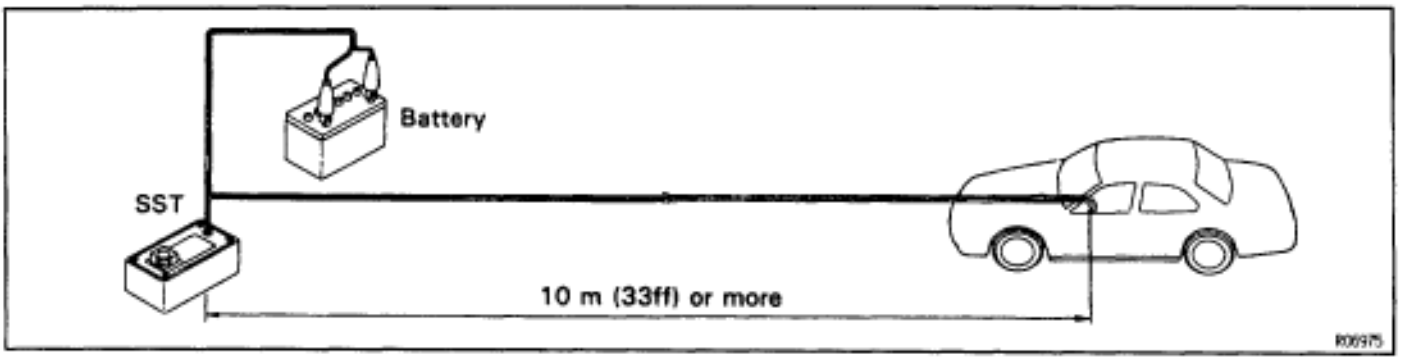

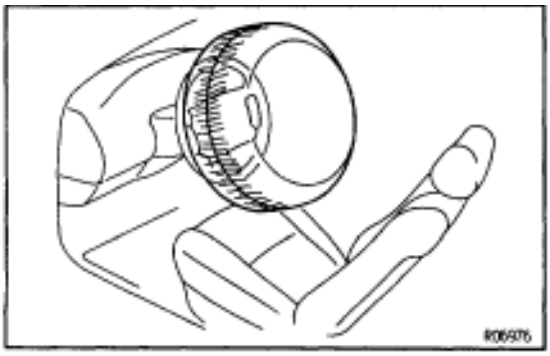

3. DEPLOY AIRBAG
(a) Confirm that no–one is inside the vehicle or within 10 m (33 ft) of the vehicle.
(b) Press the SST activation switch and deploy the airbag.
HINT: The airbag deploys simultaneously as the LED of the SST activation switch lights up.

4. DISPOSAL OF STEERING WHEEL PAD (WITH AIRBAG)

CAUTION:

- **The steering wheel pad is very hot when the airbag is deployed, so leave it alone for at least 30 minutes after deployment.**
- **Use gloves and safety glasses when handling a steering wheel pad with a deployed airbag.**
- **Do not apply water, etc. to a steering wheel pad with a deployed airbag.**
- **Always wash your hands with water after completing the operation.**

(a) When scrapping a vehicle, deploy the airbag and scrap the vehicle with the steering wheel pad still installed.

(b) When moving a vehicle for scrapping which has a steering wheel pad with deployed airbag, use gloves and safety glasses.

When disposing of steering wheel pad only

When disposing of the steering wheel pad (with airbag) only, never use the customer's vehicle to deploy the airbag.

Remove the steering wheel pad from the vehicle and be sure to follow the procedure given below when deploying the airbag.

HINT: Have a battery ready as the power source to deploy the airbag.

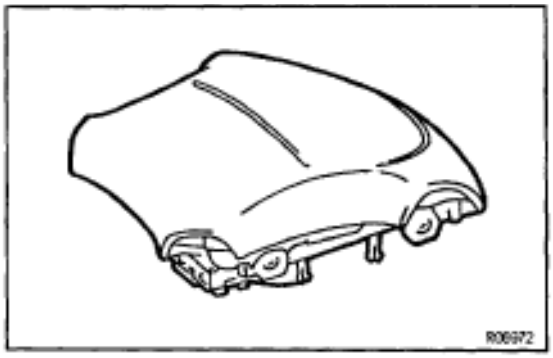

1. REMOVE STEERING WHEEL PAD (See SR section)

CAUTION:

- **When removing the steering wheel pad (with airbag), work must be started after 90 seconds from the time the ignition switch is turned to the "LOCK" position and the negative (–) terminal cable is disconnected from the battery.**
- **When storing the steering wheel pad, keep the upper surface of the pad facing upward.**

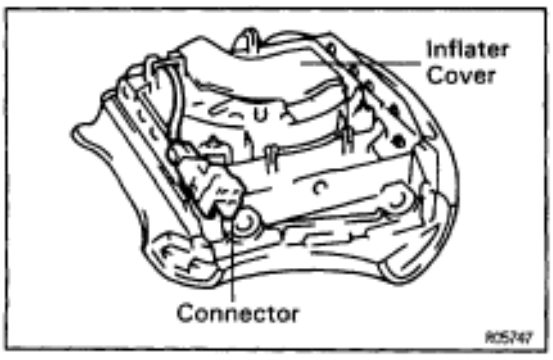

2. REMOVE STEERING WHEEL PAD CONNECTOR

Remove the connector on the steering wheel pad rear surface from the inflater cover.

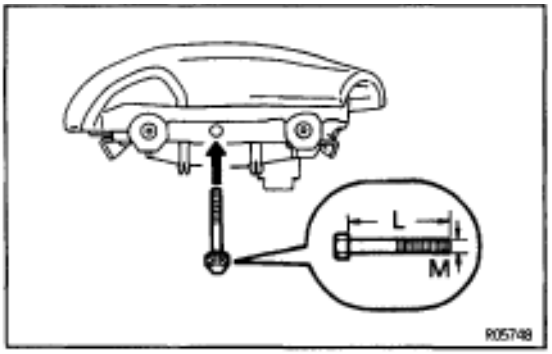

3. FIX STEERING WHEEL PAD TO DISC WHEEL WITH TIRE

(a) Install the 2 bolts and washers in the 2 bolt holes in the steering wheel pad.

Bolt:

L: 35.0 mm (1.378 in.)
M: 6.0 mm (0.236 in.)
Pitch: 1.0 mm (0.039 in.)

NOTICE:

- **Tighten the bolts by hand until the bolts become difficult to turn.**
- **Do not tighten the bolts too much.**

(b) Using a service–purpose wire harness for the vehicle tie down the steering wheel pad to the disc wheel.

Wire harness: Stripped wire harness section
1.25 mm^2 or more (0.0019 in^2 or more)

HINT: To calculate the square of the stripped wire harness section

Square = 3.14 X (Diameter)^2 divided by 4

CAUTION: If a wire harness which is too thin or some other thing is used to tie down the steering wheel pad, it may be snapped by the shock when the airbag is deployed. This is highly dangerous. Always use a wire harness for vehicle use which is at least 1.25 mm^2 (0.0019 in^2.).

(1) Using 3 wire harnesses, wrap the wire harnesses at least 2 times each around the bolts installed on the left and right sides of the steering wheel pad.

CAUTION:

- **Tightly wind the wire harness around the bolts so that there is no slack.**
- **If there is slackness in the wire harness, the steering wheel pad may come loose due to the shock when the airbag is deployed. This is highly dangerous.**

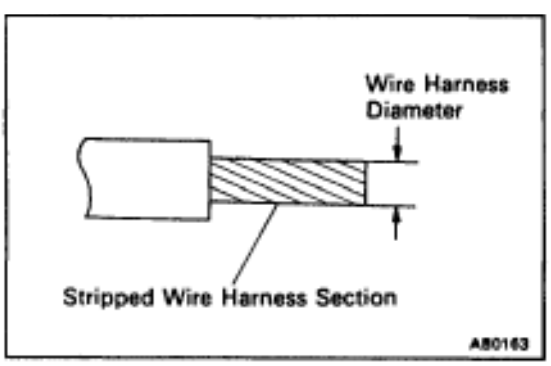

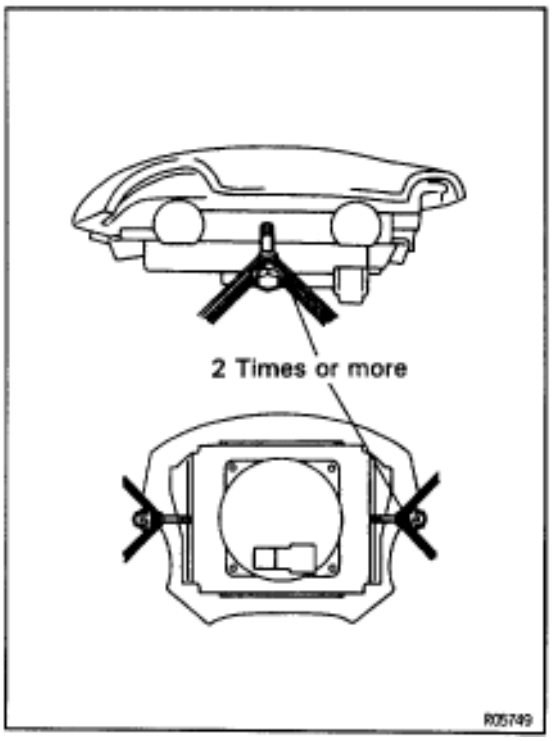

(2) Face the upper surface of the steering wheel pad upward.

(3) Separately tie the left and right sides of the steering wheel pad to the disc wheel through the hub nut holes.

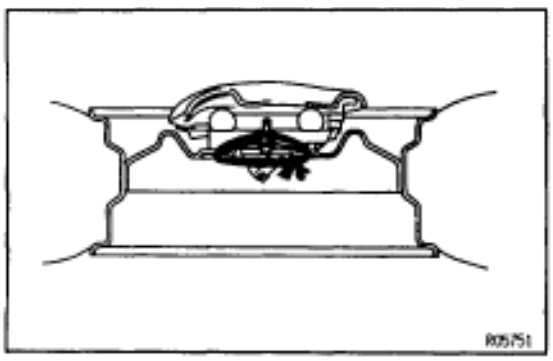

(c) Position the steering wheel pad connector so that it hangs downward through a hub hole in the disc wheel.

CAUTION:

- **Make sure that the wire harness is tight. It is very dangerous if looseness in the wire harness results in the steering wheel pad coming free through the shock of the airbag deploying.**
- **Always tie down the steering wheel pad with the pad side facing upward. It is very dangerous if the steering wheel pad is tied down with the metal surface facing upward as the wire harness will be cut by the shock of the airbag deploying and the steering wheel pad will be thrown into the air.**

HINT: The disc wheel will be marked by airbag deployment, so use a redundant disc wheel.

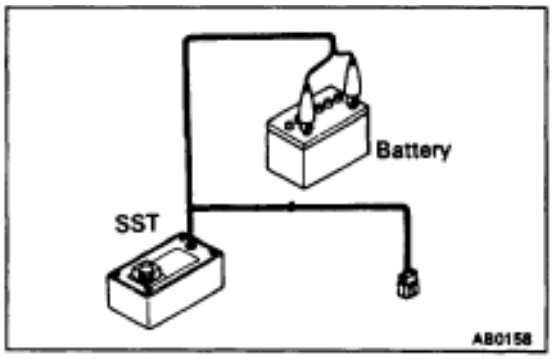

4. CONFIRM FUNCTIONING OF SST

(See page RS–19**)**

SST 09082–00070

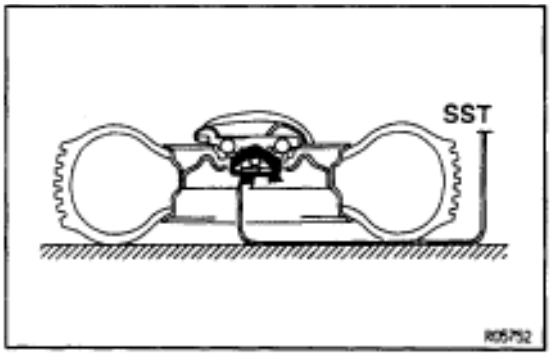

5. INSTALL SST

CAUTION: Place the disc wheel on level ground.

(a) Connect the SST connector to the steering wheel pad connector:

SST 09082–00700

NOTICE: To avoid damaging the SST connector and wire harness, do not lock the secondary lock of the twin lock. Also, provide some slack for the SST wire harness inside the disc wheel.

(b) Move the SST to at least 10 m (33 ft) away from the steering wheel pad tied down on the disc wheel.

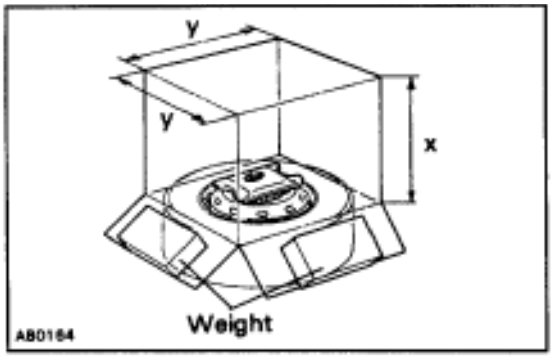

6. COVER STEERING WHEEL PAD WITH CARDBOARD BOX OR TIRES

(Covering Method Using Cardboard Box)

Cover the steering wheel pad with the cardboard box and weigh the cardboard box down in 4 places with at least 196 N (20 kg, 44 lb).

Size of cardboard box:

Must exceed the following dimensions–

x = 460 mm (18.11 in.)

When dimension "y" of the cardboard box exceeds the diameter of the disc wheel with tire the steering wheel pad is tied to–

x = 460 mm (18.11 in.) + width of tire

y = 650 mm (25.59 in.)

NOTICE: If a cardboard box smaller than the size specified is used, the cardboard box will be broken by the shock of the airbag deployment.

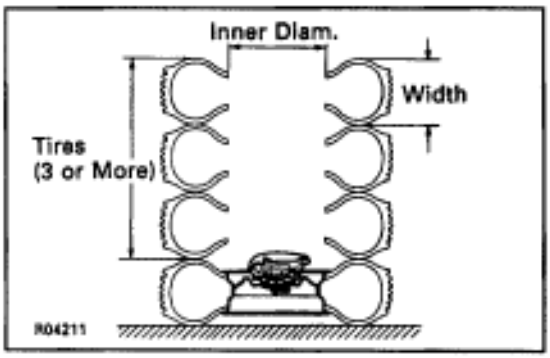

Covering Method Using Tires:

Place at least 3 tires without disc wheel on top of the disc wheel with tire to which the steering wheel pad is tied.

Tire size: Must exceed the following dimensions–

Width: 185 mm (7.28 in.)

Inner dia.: 360 mm (14.17 in.)

CAUTION: Do not use tires with disc wheels.

NOTICE: The tires may be marked by the airbag deployment, so use redundant tires.

7. AIRBAG DEPLOYMENT

(a) Connect the SST red clip to the battery positive (+) terminal and the black clip to the battery negative (–) terminal.

(b) Confirm that no–one is within 10 m (33 ft) of the disc wheel the steering wheel pad is tied to.

(c) Press the SST activation switch and deploy the airbag.

HINT: The airbag deploys simultaneously as the LED of the SST activation switch lights up.

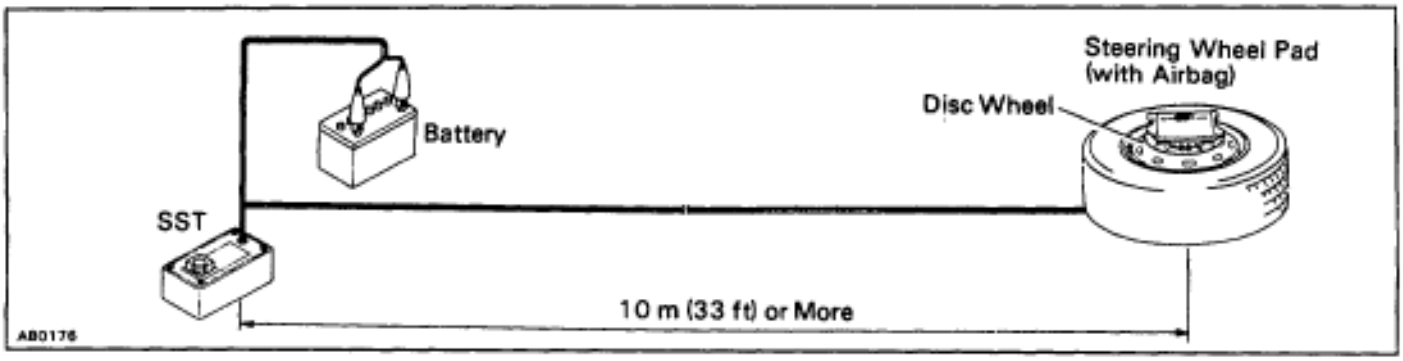

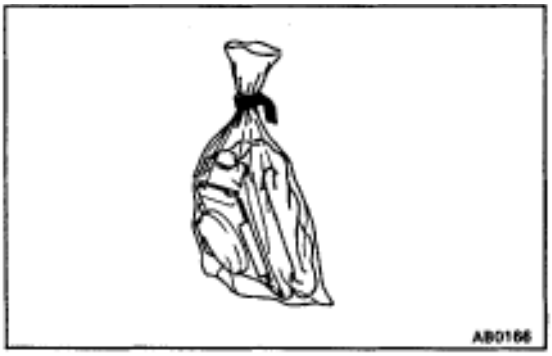

8. DISPOSAL OF STEERING WHEEL PAD (WITH AIRBAG)

CAUTION:

- **The steering wheel pad is very hot when the airbag is deployed, so leave it alone for at least 30 minutes after deployment.**
- **Use gloves and safety glasses when handling a steering wheel pad with a deployed airbag.**
- **Do not apply water, etc. to a steering wheel pad with a deployed airbag.**
- **Always wash your hands with water after completing the operation.**

(a) Remove the steering wheel pad from the disc wheel.

(b) Place the steering wheel pad in a vinyl bag, tie the end tightly and dispose of it the same way as other general parts.

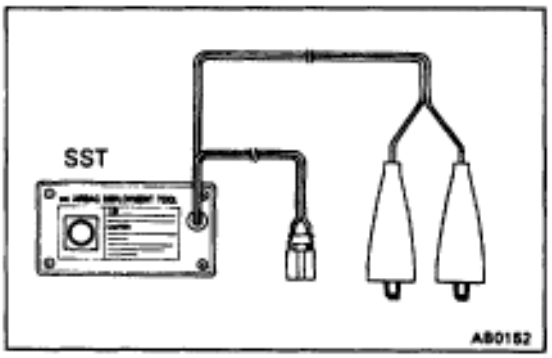

CONFIRM FUNCTIONING OF SST

When deploying the airbag, always use the specified SST: SRS AIRBAG DEPLOYMENT TOOL.
SST 09082–00700

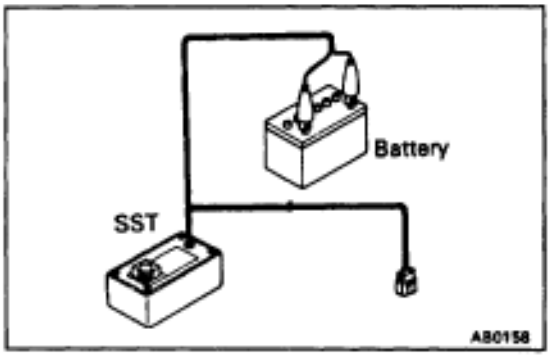

1. CONNECT SST TO BATTERY

Connect the red clip of the SST to the battery positive (+) terminal and the black clip to the battery negative (–) terminal.
HINT: Do not connect the yellow connector which connects with the supplemental restraint system.

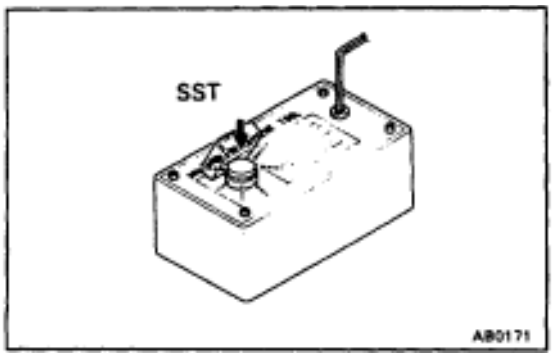

2. CONFIRM FUNCTIONING OF SST

Press the SST activation switch, and confirm the LED of the SST activation switch lights up.

CAUTION: If the LED lights up when the activation switch is not being pressed, SST malfunction is probable, so definitely do not use the SST.

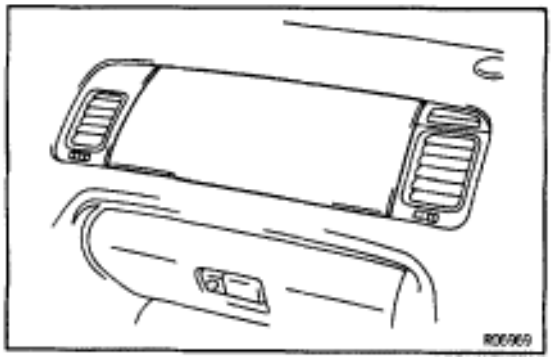

FRONT PASSENGER AIRBAG ASSEMBLY

INSPECTION ITEMS

1. VEHICLES NOT INVOLVED IN A COLLISION

(a) Do a diagnostic system check. (See page RS–44)

(b) Do a visual check which includes the following items with the front passenger airbag assembly installed in the vehicle.

- Check for cuts, minute cracks or marked discoloration of the front passenger airbag door.

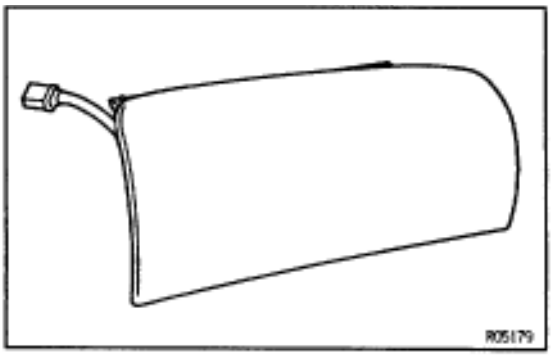

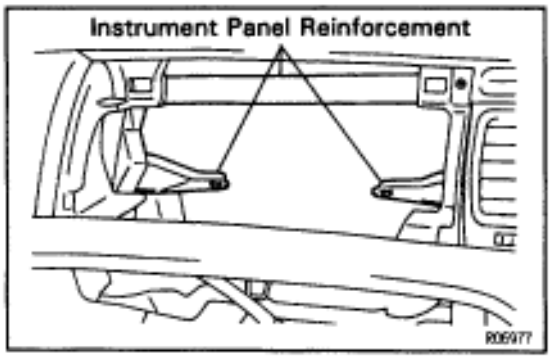

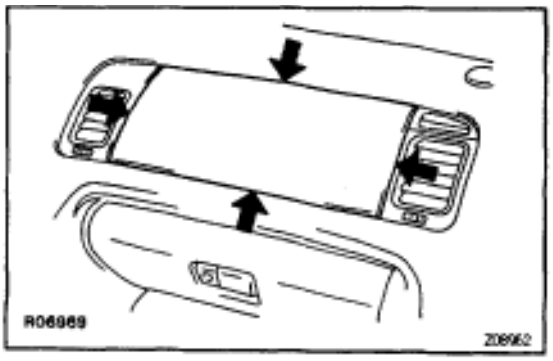

2. VEHICLE INVOLVED IN A COLLISION
IF THE AIRBAG IS NOT DEPLOYED

(a) Do a diagnostic system check. (See page RS–44)

(b) Do a visual check which includes the following items with the airbag assembly removed from the vehicle.

- Check for cuts and cracks in, or marked discoloration of the front passenger airbag door.
- Check for cuts and cracks in wire harnesses, and for chipping in connectors.
- Check for deformation of the instrument panel and instrument panel reinforcement.

HINT:

- If the instrument panel or instrument panel reinforcement is deformed, never repair it. Always replace it with a new one.
- There should be no interference between the instrument panel and front passenger airbag door. The clearance should be uniform all the way around when the new airbag assembly is installed on the instrument panel.

CAUTION: For removal and installation of the front passenger airbag assembly, see page RS–23, "FRONT PASSENGER AIRBAG ASSEMBLY REMOVAL AND INSTALLATION" and be sure to follow the correct procedure.

IF THE AIRBAG IS DEPLOYED

(a) Do a diagnostic system check. (See page RS–44)

(b) Do a visual check which includes the following items with the airbag assembly removed from vehicle.

- Check for deformation of the instrument panel and instrument panel reinforcement.
- Check for damage to the connector and wire harness.

HINT:

- If the instrument panel or instrument panel reinforcement is deformed, never repair it. Always replace it with a new one.
- There should be no interference between the instrument panel and front passenger airbag door. The clearance should be uniform all the way around when the new airbag assembly is installed on the instrument panel.

REPLACEMENT REQUIREMENTS

In the following case, replace the front passenger airbag assembly, instrument panel and instrument panel reinforcement.

- If the airbag has been deployed.
- If the front passenger airbag assembly has been found to be faulty in troubleshooting.
- If the front passenger airbag assembly, instrument panel or instrument panel reinforcement has been found to be faulty during the check in items 1–(b) or 2–(b).
- If the front passenger airbag assembly has been dropped.

CAUTION: For replacement of the front passenger airbag assembly, see page RS–23, "FRONT PASSENGER AIRBAG ASSEMBLY REMOVAL AND INSTALLATION" and be sure to follow the correct procedure.

COMPONENTS

mm (in.)

Code	Shape	Size	Code	Shape	Size
Ⓐ	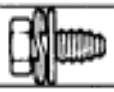	ϕ=8 (0.32) L=18 (0.71)	Ⓑ		ϕ=6 (0.24) L=22 (0.87)

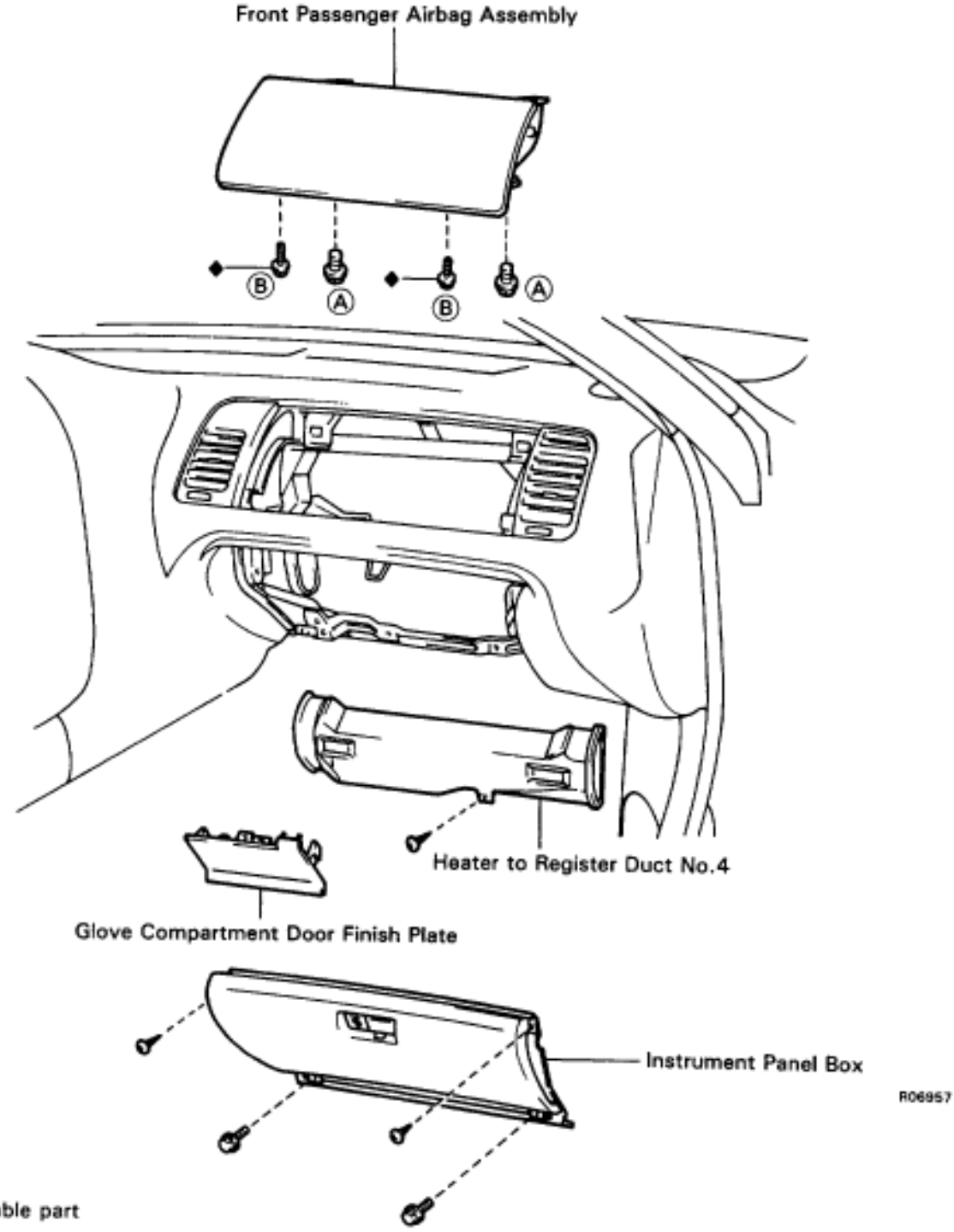

◆ Non-reusable part

Z13613

FRONT PASSENGER AIRBAG ASSEMBLY REMOVAL AND INSTALLATION

NOTICE:

- **If the wiring connector of the SRS is disconnected with the ignition switch at ON or ACC, diagnostic trouble codes will be recorded.**
- **Never use airbag parts from another vehicle. When replacing parts, replace with new parts.**

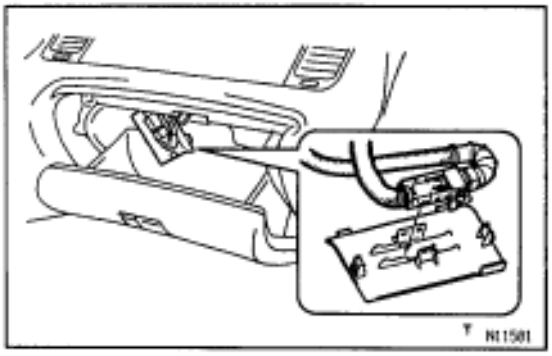

1. DISCONNECT AIRBAG CONNECTOR

(a) Remove negative (–) terminal cable from the battery, and wait at least 90 seconds.

(b) Remove the glove compartment door finish plate inside the instrument panel box.

NOTICE: When handling the airbag connector, take care not to damage the airbag wire harness.

(c) Pull up the connector.

(d) Disconnect the airbag connector.

2. REMOVE THESE PARTS:

(a) Instrument panel box
(See page BO–49)

(b) Heater to register duct No. 4

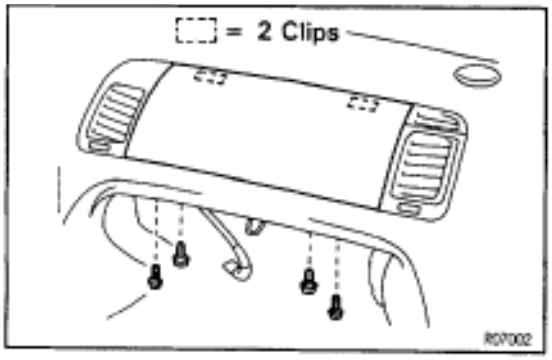

3. REMOVE FRONT PASSENGER AIRBAG ASSEMBLY

(a) Remove the 4 bolts.

(b) Pull the front passenger airbag assembly to remove it.

CAUTION:

- **Do not store the front passenger airbag assembly with the airbag door facing down.**
- **Never disassemble the front passenger airbag assembly.**

4. INSTALL FRONT PASSENGER AIRBAG ASSEMBLY

(a) Install the front passenger airbag assembly.

(b) Install the 2 bolts to instrument panel reinforcement.

Torque: 21 N·m (210 kgf·cm, 15 ft·lbf)

(c) Install the 2 bolts to instrument panel.

Torque: 8.8 N·m (90 kgf·cm, 78 in.·lbf)

NOTICE:

- **Make sure the front passenger airbag assembly is installed to the specified torque.**

- **If the front passenger airbag assembly has been dropped, or there are cracks, dents or other defects in the case or connector, replace the front passenger airbag assembly with a new one.**
- **Adhesive has been applied to the 2 instrument panel bolts. When the front passenger airbag assembly is removed, always replace the bolts with new ones.**
- **When installing the front passenger airbag assembly, take care that the wirings do not interfere with other parts and are not pinched between other parts.**

5. INSTALL THESE PARTS:

(a) Heater to register duct No. 4

(b) Instrument panel box
(See page BO–49)

NOTICE: When installing the instrument panel box, carefully pull out the airbag wire harness from the glove compartment upper hole.

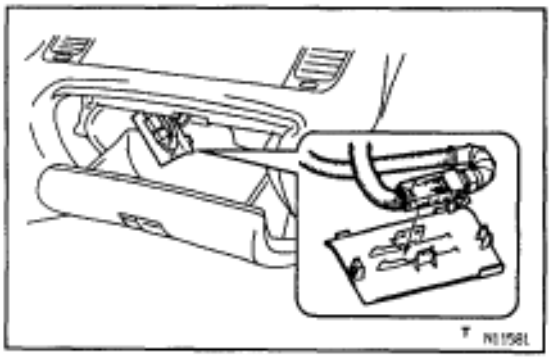

6. CONNECT AIRBAG CONNECTOR

(a) Connect the airbag connector.

(b) Put the connector on the glove compartment door finish plate.

(c) Install the glove compartment door finish plate to the instrument panel box.

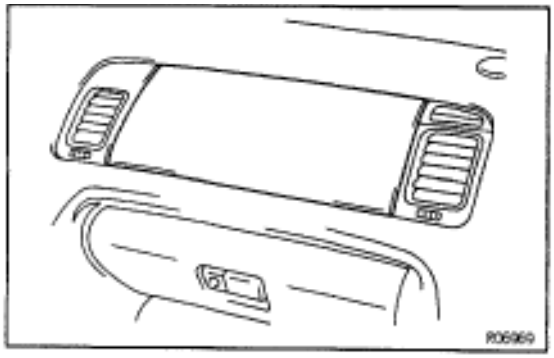

FRONT PASSENGER AIRBAG ASSEMBLY DISPOSAL

When scrapping vehicles equipped with an SRS or disposing of a front passenger airbag assembly, always first deploy the airbag in accordance with the procedure described below.

If any abnormality occurs with the airbag deployment, contact the SERVICE DEPT. of TOYOTA MOTOR SALES, U.S.A., INC..

Never dispose of a front passenger airbag assembly which has an undeployed airbag.

When disposing of a front passenger airbag assembly with an airbag deployed in a collision, follow the same procedure given under ”When scrapping vehicle, step 5. DISPOSAL OF FRONT PASSENGER AIRBAG ASSEMBLY”.

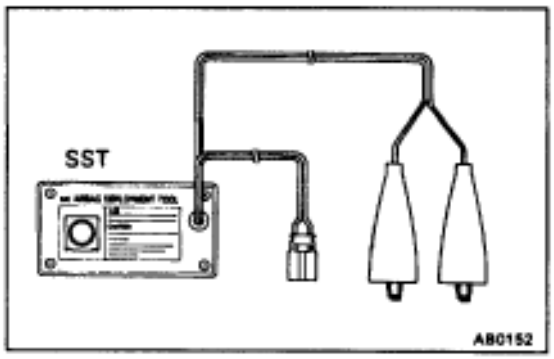

PRECAUTIONS FOR AIRBAG DEPLOYMENT

- The airbag produces a sizeable exploding sound when it deploys, so do the operation out–of–doors and where it will not create a nuisance to nearby residents.
- When deploying the airbag, always use the specified SST: SRS AIRBAG DEPLOYMENT TOOL (SST 09082–00700).
  Carry out the operation in a place away from electrical noise.
- When deploying an airbag, do it at least 10 m (33 ft) away from the front passenger airbag assembly.
- The front passenger airbag assembly is very hot when the airbag is deployed, so leave it alone for at least 30 minutes after deployment.
- Use gloves and safety glasses when handling a front passenger airbag assembly with a deployed airbag.
- Do not apply water, etc., to a front passenger airbag assembly with a deployed airbag.
- Always wash your hands with water after completing the operation.

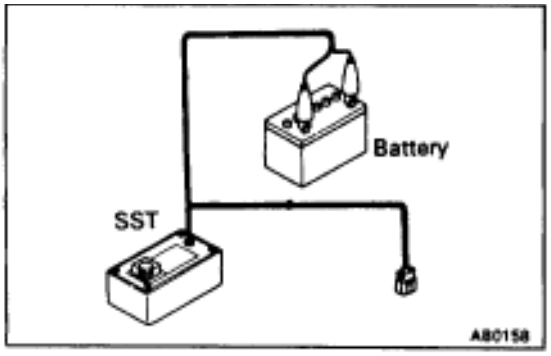

When scrapping vehicle

HINT: Have a battery ready as the power source to deploy the airbag.

1. CONFIRM FUNCTIONING OF SST

(See page RS–19**)**

SST 09082–00700

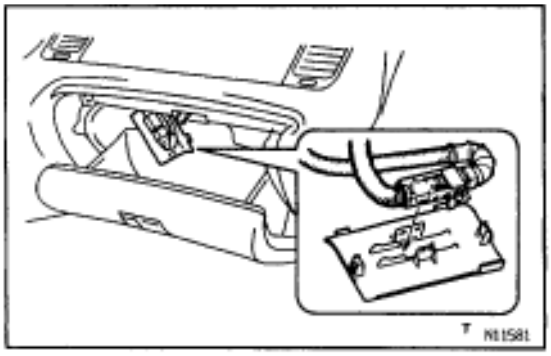

2. DISCONNECT AIRBAG CONNECTOR

(a) Remove the glove compartment finish plate inside the instrument panel box.

NOTICE: When handling the airbag connector, take care not to damage the airbag wire harness.

(b) Pull up the connector.

(c) Disconnect the airbag connector.

3. INSTALL SST

(a) Connect the SST connector to the front passenger airbag assembly connector.

SST 09082–00700

NOTICE: To avoid damaging the SST connector and wire harness, do not lock the secondary lock of the twin lock.

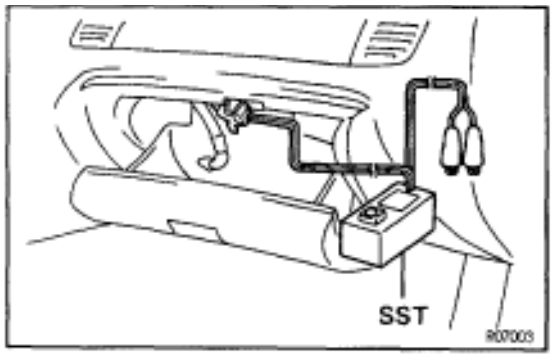

(b) Move the SST to at least 10 m (33 ft) from the front of the vehicle.

(c) Close all the doors and windows of the vehicle.

NOTICE: Take care not to damage the SST wire harness.

(d) Connect the SST red clip to the battery positive (+) terminal and the black clip to the battery negative (–) terminal.

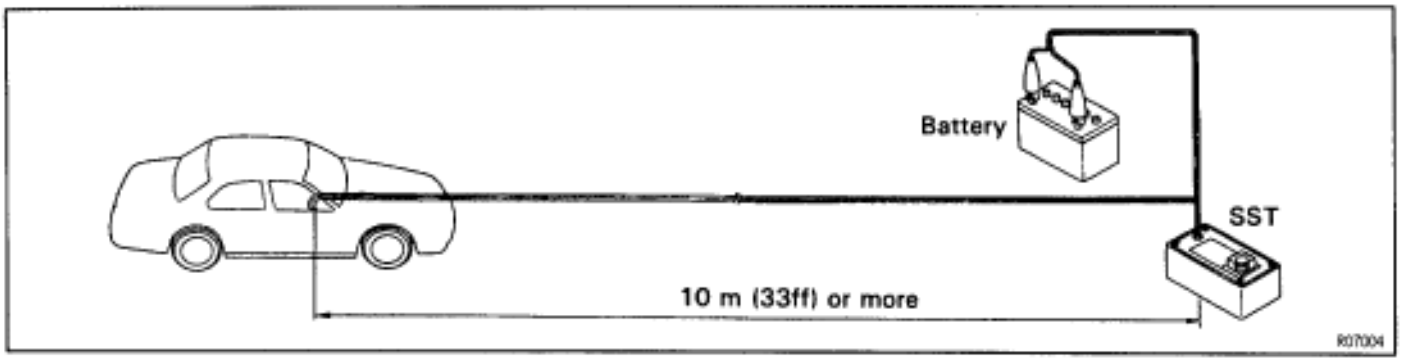

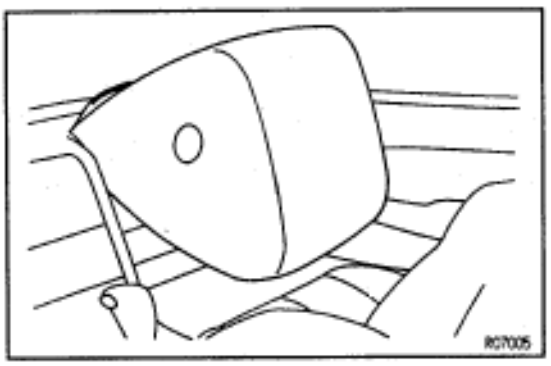

4. DEPLOY AIRBAG

(a) Confirm that no–one is inside the vehicle or within 10 m (33 ft) of the vehicle.

(b) Press the SST activation switch and deploy the airbag.

HINT: The airbag deploys simultaneously as the LED of the SST activation switch lights up.

5. DISPOSAL OF FRONT PASSENGER AIRBAG ASSEMBLY

CAUTION:

- **The front passenger airbag assembly is very hot when the airbag is deployed, so leave it alone for at least 30 minutes after deployment.**
- **Use gloves and safety glasses when handling a front passenger airbag assembly with deployed airbag.**
- **Do not apply water, etc., to a front passenger airbag assembly with deployed airbag.**
- **Always wash your hands with water after completing the operation.**

When scrapping a vehicle, deploy the airbag and scrap the vehicle with the front passenger airbag assembly still installed.

When disposing of front passenger airbag assembly only

When disposing of the front passenger airbag assembly only, never use the customer's vehicle to deploy the airbag.

Remove the front passenger airbag assembly from the vehicle and be sure to follow the procedure given below when deploying the airbag.

HINT: Have a battery ready as the power source to deploy the airbag.

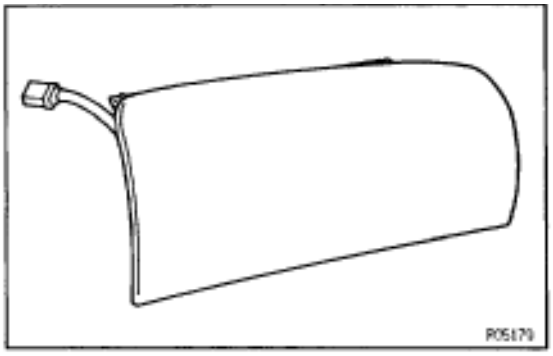

1. REMOVE FRONT PASSENGER AIRBAG ASSEMBLY (See page RS–23)

CAUTION:

- **When removing the front passenger airbag assembly, work must be started after 90 seconds from the time the ignition switch is turned to the "LOCK" position and the negative (–) terminal cable is disconnected from the battery.**
- **Store the front passenger airbag assembly with the airbag door facing up.**

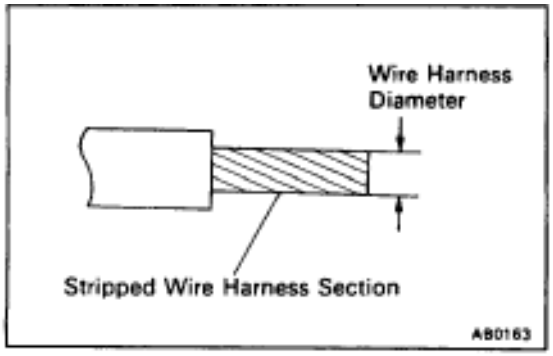

2. FIX FRONT PASSENGER AIRBAG ASSEMBLY TO TIRE

Using a service–purpose wire harness for vehicle, tie down the front passenger airbag assembly to the tire.

Wire harness: Stripped wire harness section

1.25 mm^2 or more (0.0019 $in.^2$ or more)

HINT: To calculate the square of the stripped wire harness section

Square = 3.14 X $(Diameter)^2$ divided by 4

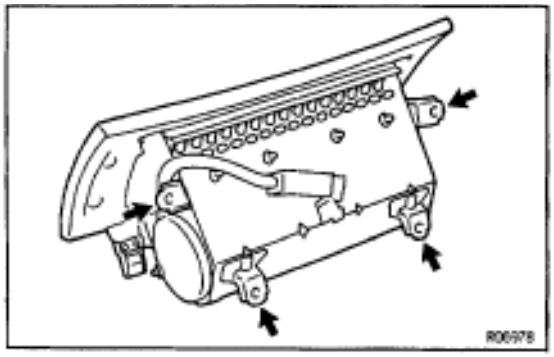

CAUTION: If the front passenger airbag assembly is tied down by too thin a wire harness, it may snap. This is highly dangerous. Always use a wire harness which is at least 1.25 mm^2 (0.0019 in.^{2}).

(1) Wrap the wire harness around the tire, passing the wire harness through the installation holes which indicated in the illustration by arrows.

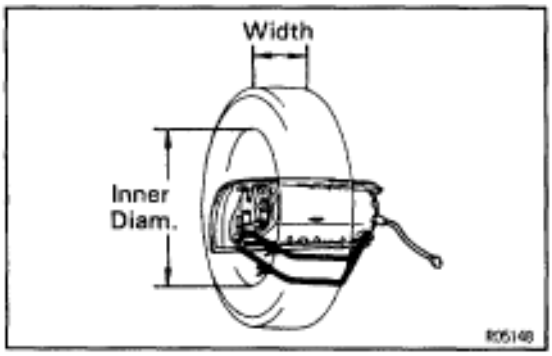

(2) Position the front passenger airbag assembly inside the tire with the airbag door facing inside.

Tire size: Must exceed the following dimensions–

Width: 185 mm (7.28 in.)

Inner dia.: 360 mm (14.17 in.)

CAUTION:

- **Make sure the wire harness is tight. It is very dangerous if a loose wire harness results in the front passenger airbag assembly coming free due to the shock of the airbag deploying.**
- **Always tie down the front passenger airbag assembly with the airbag door facing inside.**

NOTICE: The tire will be marked by the airbag deployment, so use a redundant tire.

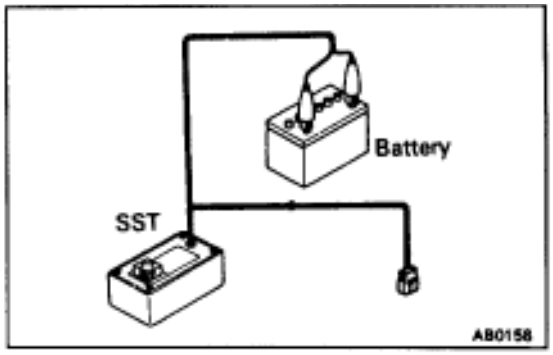

3. CONFIRM FUNCTIONING OF SST

(See page RS–19)

SST 09082–00700

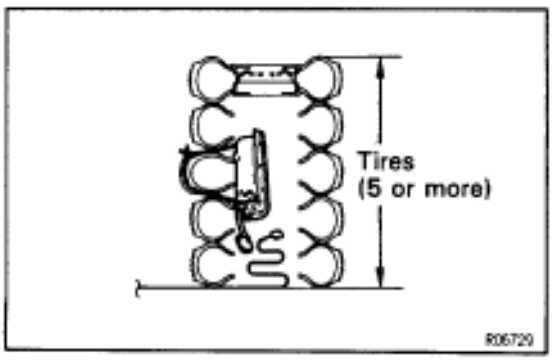

4. PLACE TIRES

(a) Place at least 2 tires under the tire to which the front passenger airbag assembly is tied.

(b) Place at least 2 tires over the tire to which the front passenger airbag assembly is tied. The top tire should have the wheel installed.

(c) Tie the tires together by 2 wire harnesses.

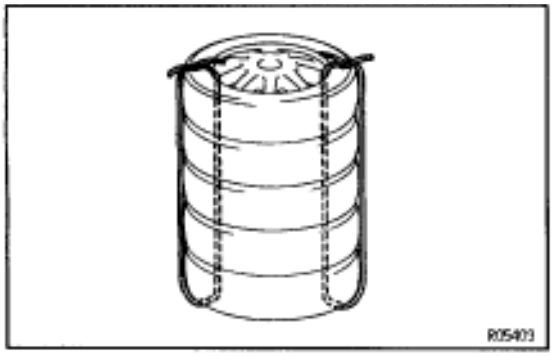

CAUTION: Make sure that the wire harnesses are tight. It is very dangerous if loose wire harnesses result in the tires coming free due to the shock of the airbag deploying.

HINT: Place the SST connector and wire harness inside tires. Provide at least 1 m (3 ft) of slack for the wire harness.

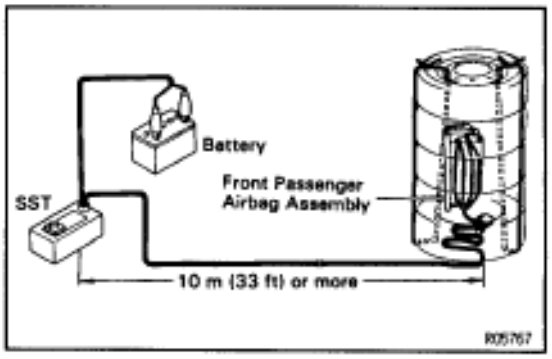

5. INSTALL SST

Connect the SST connector to the front passenger airbag assembly connector.

SST 09082–00700

NOTICE: To avoid damaging the SST connector and wire harness, do not lock the secondary lock of the twin lock.

6. AIRBAG DEPLOYMENT

(a) Connect the SST red clip to the battery positive (+) terminal and the black clip to the battery negative (–) terminal.

(b) Confirm that no–one is within 10 m (33 ft) of the tire the front passenger airbag assembly is tied to.

(c) Press the SST activation switch and deploy the airbag.

HINT: The airbag deploys simultaneously as the LED of the SST activation switch lights up.



7. DISPOSAL OF FRONT PASSENGER AIRBAG ASSEMBLY

CAUTION:

- **The front passenger airbag assembly is very hot when the airbag is deployed, so leave it alone for at least 30 minutes after deployment.**
- **Use gloves and safety glasses when handling a front passenger airbag assembly with a deployed airbag.**
- **Do not apply water, etc. to a front passenger airbag assembly with a deployed airbag.**
- **Always wash your hands with water after completing the operation.**

(a) Remove the front passenger airbag assembly from the tire.

(b) Place the front passenger airbag assembly in a vinyl bag, tie the end tightly and dispose of it the same way as other general parts.

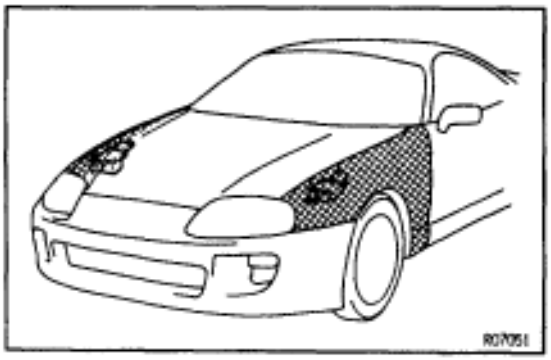

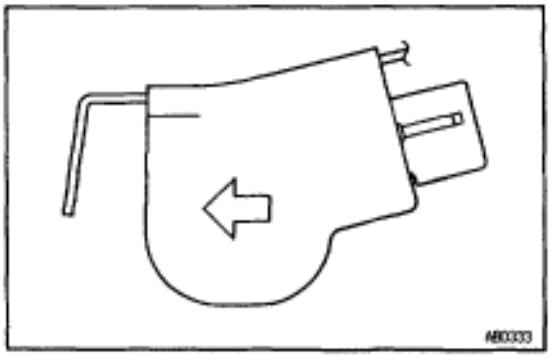

FRONT AIRBAG SENSOR

INSPECTION ITEMS

1. VEHICLES NOT INVOLVED IN A COLLISION

Do a diagnostic system check. (See page RS–44)

2. VEHICLES INVOLVED IN A COLLISION

(a) Do a diagnostic system check.
(See page RS–44)

(b) If the front fender of the car or its periphery is damaged, do a visual check for damage to the front airbag sensor, which includes the following items even if the airbag was not deployed:

- Bracket deformation
- Peeling of paint from the bracket
- Cracks, dents or chips in the case
- Cracks and dents in, or chipping and scratches of the connector
- Peeling off of the label or damage to the series number

Also refer to the body dimension drawings in the BODY section and check the dimensions around where the front airbag sensors are mounted.
(The SRS may malfunction, or may not work, if the body area is not repaired or replaced correctly.)

REPLACEMENT REQUIREMENTS

In the following cases, replace the front airbag sensor.

- If the SRS has been deployed in a collision.
  (Replace both the left and right airbag sensors.)
- If the front airbag sensor has been found to be faulty in troubleshooting.
- If the front airbag sensor has been found to be faulty during the check in item 2–(b).
- If the front airbag sensor has been dropped.

NOTICE: For replacement of the front airbag sensor, see page RS–31, "FRONT AIRBAG SENSOR REMOVAL AND INSTALLATION" and be sure to follow the correct procedure.

COMPONENTS

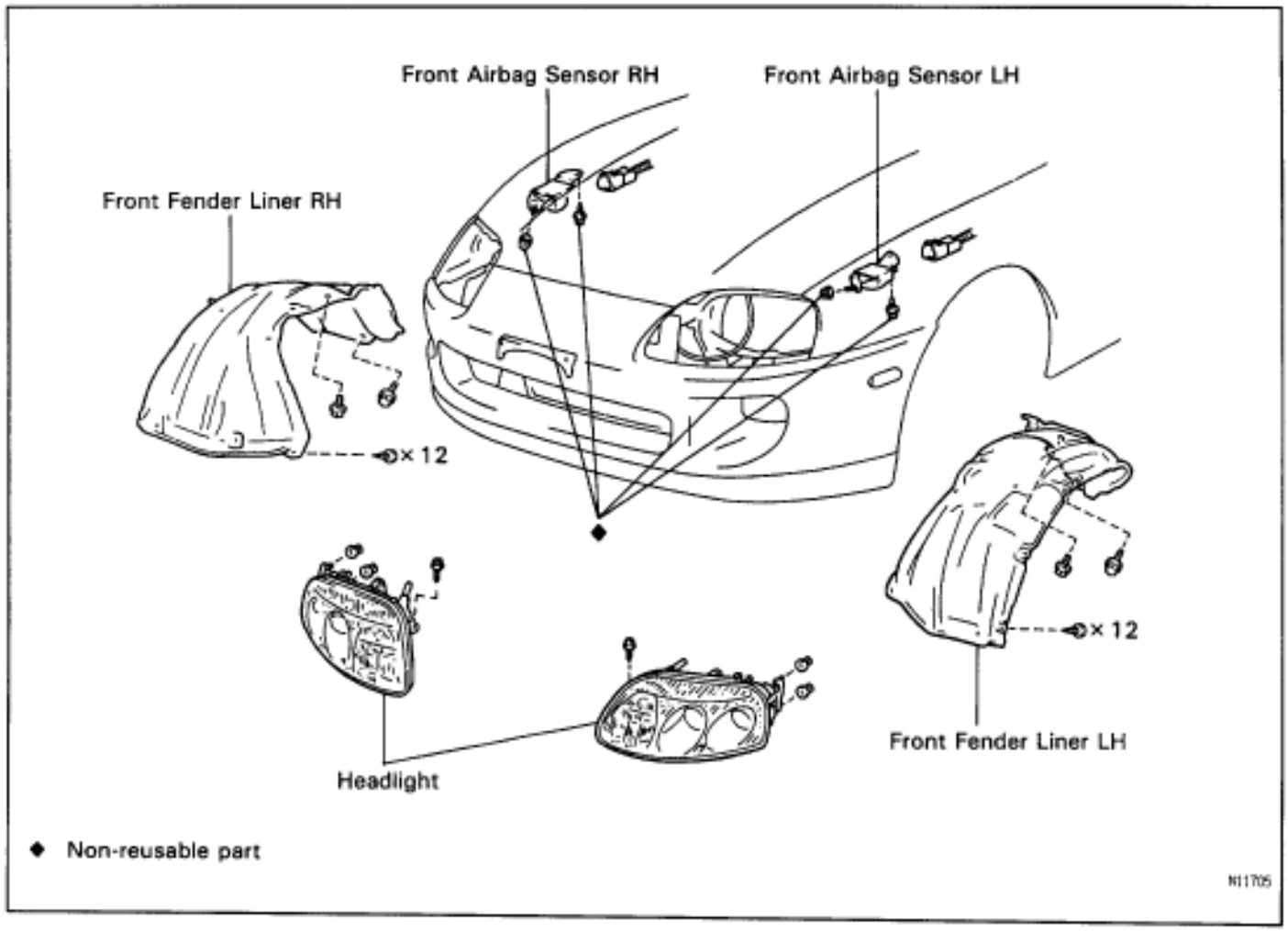

FRONT AIRBAG SENSOR REMOVAL AND INSTALLATION

NOTICE:

- **If the wiring connector of the SRS is disconnected with the ignition switch at ON or ACC, diagnostic trouble codes will be recorded.**
- **Never use SRS parts from another vehicle. When replacing parts, replace with new parts.**
- **Never reuse the sensor involved in a collision when the SRS has deployed.**
- **Never repair a sensor in order to reuse it.**

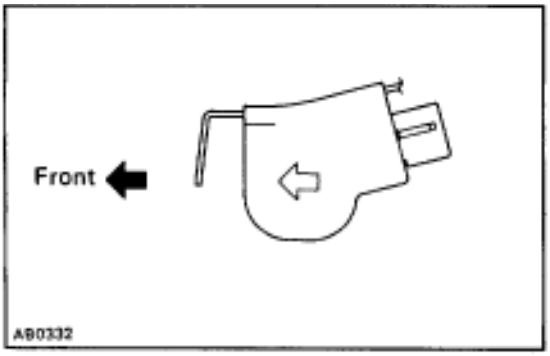

1. REMOVE FRONT FENDER LINER AND HEADLIGHT

2. REMOVE FRONT AIRBAG SENSOR

(a) Disconnect the connector.

(b) Remove the bolt, the nut and the sensor.

3. INSTALL FRONT AIRBAG SENSOR

Install the sensor with the arrow on the sensor facing toward the front of the vehicle.

Torque: 29 N·m (300 kgf·cm, 22 ft·lbf)

NOTICE:

- **Make sure the sensor is installed to the specified torque.**
- **If the sensor has been dropped, or there are cracks, dents or other defects in the case, brackets or connector, replace the sensor is removed, always replace the set bolt and the nut with new ones.**
- **The sensor set bolt and the nut have been anti–rust treated. When the sensor is removed, always replace the set bolt and the nut with new ones.**
- **After installation, shake the sensor to check that there is no looseness.**
- **The front sensor is equipped with an electrical connection check mechanism. Be sure to lock this mechanism securely when connecting the connector. If the connector is not securely locked, a malfunction code will be detected by the diagnosis system.**
- **Check that the dimensions of the body where the front airbag sensor is installed match those in the body dimension drawings in the BODY section. (The SRS may malfunction, or may not work, if the dimensions of the sensor mount is not correct.)**

4. INSTALL HEADLIGHT AND FRONT FENDER LINER

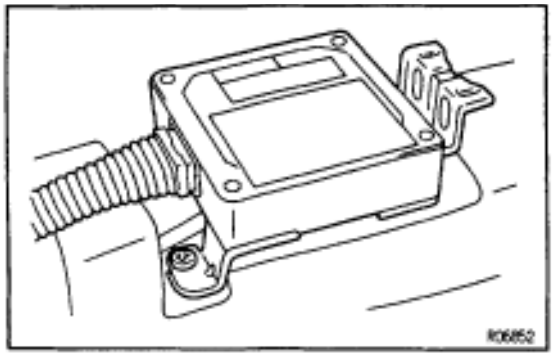

CENTER AIRBAG SENSOR ASSEMBLY

INSPECTION ITEMS

1. **VEHICLES NOT INVOLVED IN A COLLISION**
   Do a diagnostic system check. (See page RS–44)
2. **VEHICLES INVOLVED IN A COLLISION**
   IF THE SRS IS NOT DEPLOYED
   Do a diagnostic system check.
   (See page RS–44)
   IF THE SRS IS DEPLOYED
   Replace the center airbag sensor assembly.

REPLACEMENT REQUIREMENTS

In the following cases, replace the center airbag sensor assembly.

- If the SRS has been deployed in a collision.
- If the center airbag sensor assembly has been found to be faulty in troubleshooting.
- If the center airbag sensor assembly has been dropped.

NOTICE: For replacement of the center airbag sensor assembly, see page RS–34, ”CENTER AIRBAG SENSOR ASSEMBLY REMOVAL AND INSTALLATION” and be sure to follow the correct procedure.

COMPONENTS

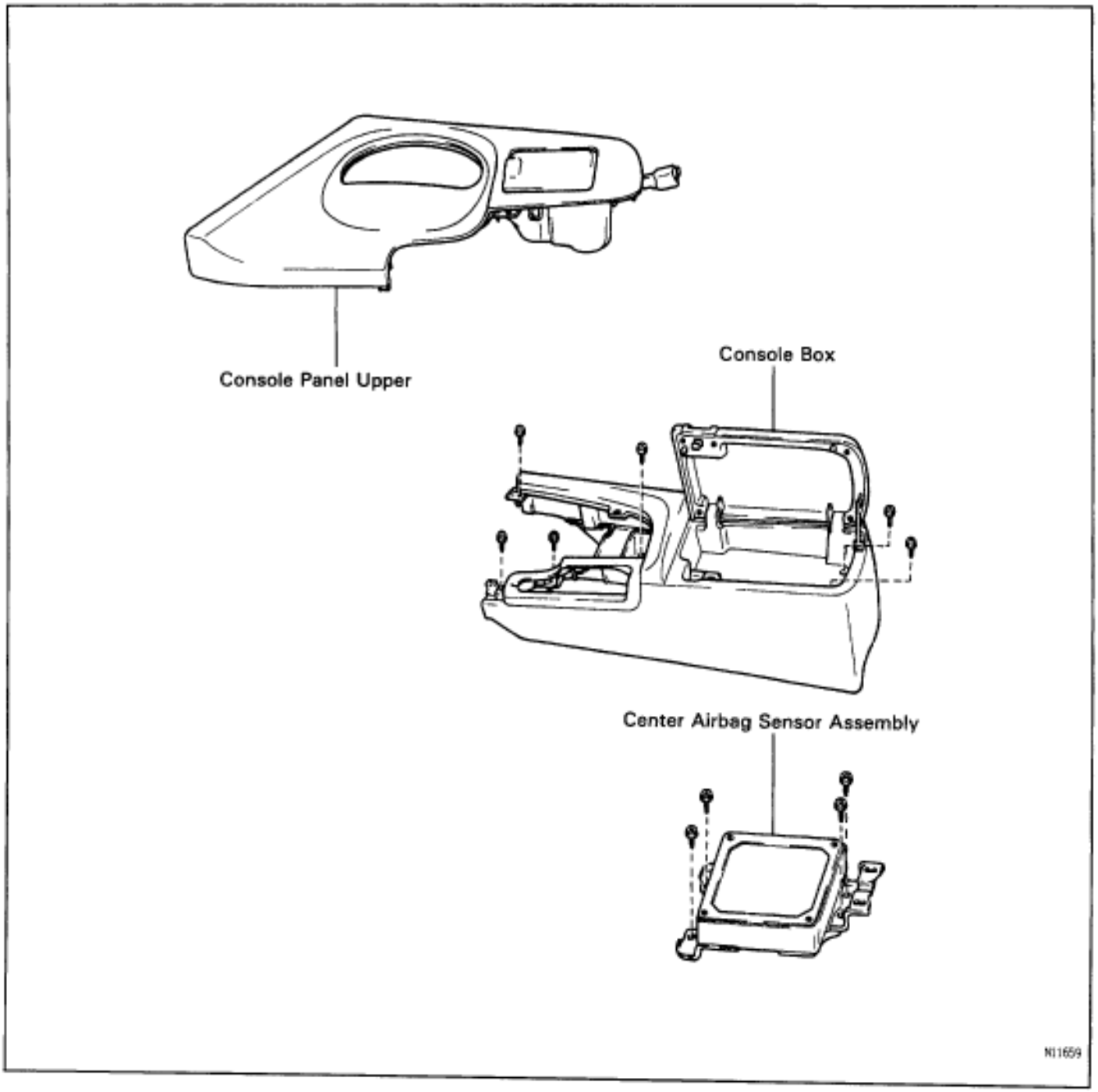

CENTER AIRBAG SENSOR ASSEMBLY REMOVAL AND INSTALLATION

NOTICE:

- **Do not open the cover or the case of the ECU and various computers unless absolutely necessary. (If the IC terminals are touched, the IC may be destroyed by static electricity.)**

- **Never use SRS parts from another vehicle. When replacing parts, replace with new parts.**
- **Never reuse the center airbag sensor assembly involved in a collision when the airbag has deployed.**
- **Never repair a sensor in order to reuse it.**

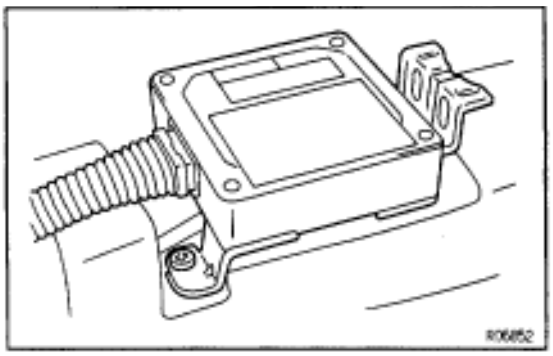

1. REMOVE CONSOLE PANEL UPPER AND CONSOLE BOX (See page BO–44)

2. REMOVE CENTER AIRBAG SENSOR ASSEMBLY

(a) Disconnect the connector.

NOTICE: Removal of the connector is done with the sensor assembly installed.

(b) Using a torx wrench, remove the 4 screws and the center airbag sensor assembly.

Torx wrench: T40 (Part No. 09042–00020 or locally manufactured tool)

3. INSTALL CENTER AIRBAG SENSOR ASSEMBLY

(a) Using a torx wrench, install the center airbag sensor assembly with the 4 screws.

Torx wrench: T40 (Part No. 09042–00020 or locally manufactured tool)

Torque: 21 N·m (210 kgf·cm, 15 ft·lbf)

(b) Connect the connector.

NOTICE:

- **Installation of the connector is done with the sensor assembly installed.**
- **Make sure the sensor assembly is installed to the specified torque.**
- **If the sensor assembly has been dropped, or there are cracks, dents or other defects in the case, bracket or connector, replace the sensor assembly with a new one.**
- **When installing the sensor assembly, take care that the SRS wiring does not interfere with other parts and is not pinched between other parts.**
- **After installation, shake the sensor assembly to check that there is no looseness.**

4. INSTALL CONSOLE BOX AND CONSOLE PANEL UPPER (See page BO–44)

WIRE HARNESS AND CONNECTOR

HINT: The SRS wire harness is integrated with the cowl wire harness assembly and floor wire harness assembly.
The wires for the SRS wire harness are encased in a yellow corrugated tube and all the connectors in the system are a standard yellow color.

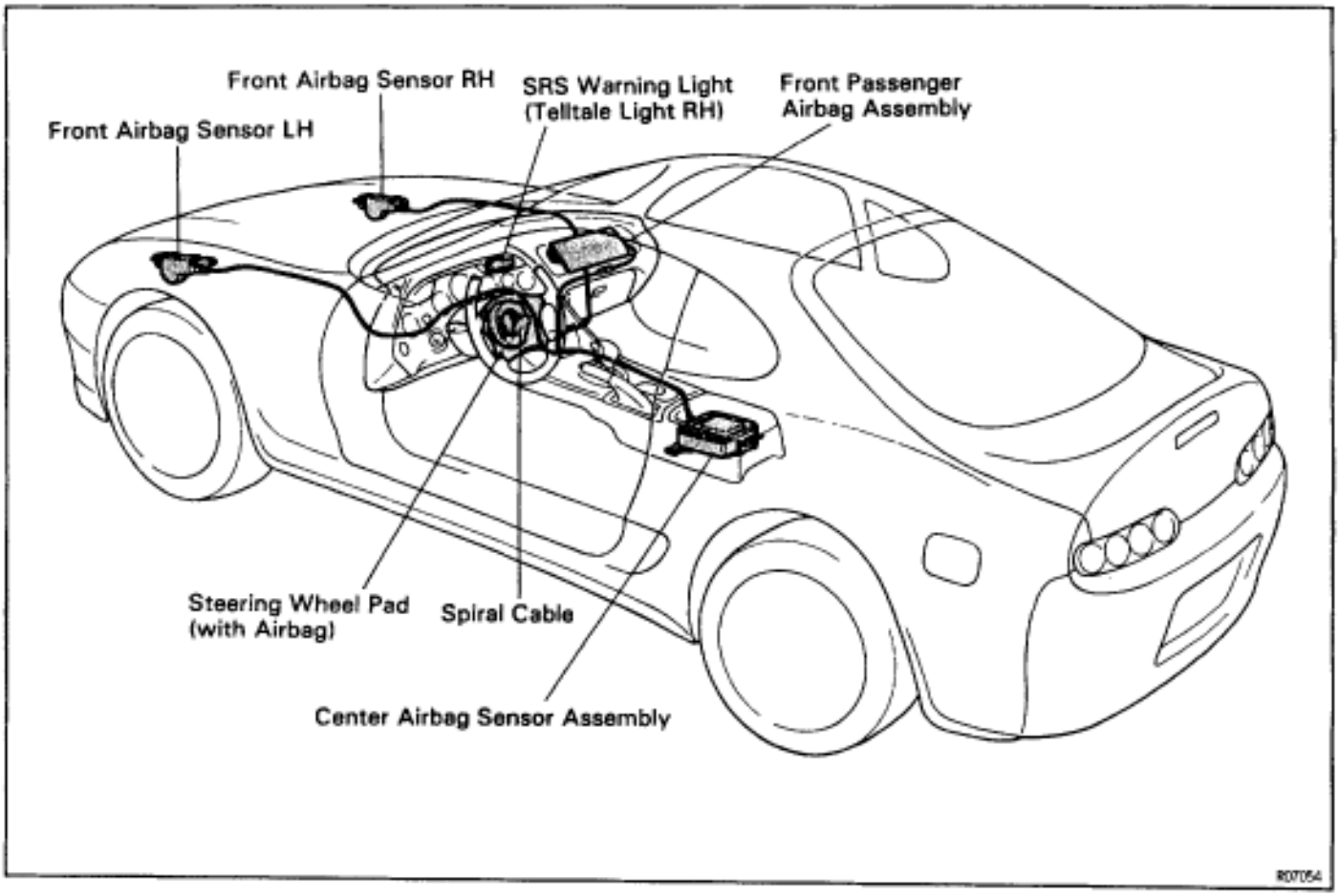

INSPECTION ITEMS

1. VEHICLES NOT INVOLVED IN A COLLISION

Do a diagnostic system check. (See page RS–44)

2. VEHICLES INVOLVED IN A COLLISION

(a) Do a diagnostic system check.
(See page RS–44)

(b) Check for breaks in all wires of the SRS wire harness, and for exposed conductors.

(c) Check to see if the SRS wire harness connectors are cracked or chipped.

REPLACEMENT REQUIREMENTS

In the following cases, replace the wire harness or connector.

- If any part of the SRS wire harness or any connector has been found to be faulty in troubleshooting.
- If any part of the SRS wire harness or any connector has been found to be faulty during the check in items 2–(b) or (c).

NOTICE:

- **If the wire harness used in the SRS is damaged, replace the whole wire harness assembly.**
- **When the connector to the front airbag sensors can be repaired alone (when there is no damage to the wire harness), use the repair wire specially designed for the purpose.**

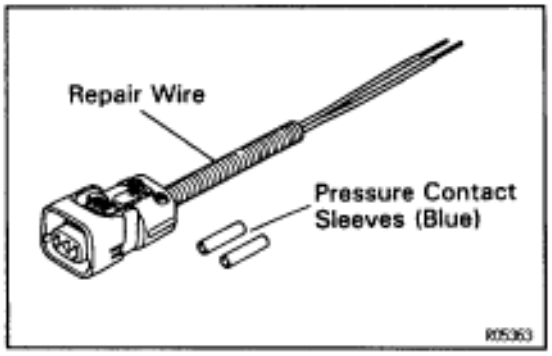

REPAIR WIRE FOR FRONT AIRBAG SENSOR REPLACEMENT

Repair wire with 2 pressure–contact sleeves (Part No. 82988–24010) has been prepared for exclusive use in repairing connector damage etc., caused by frontal collision of the vehicle.

When repairing the front airbag sensor connector on the wire harness side, always use the special repair wire.

NOTICE: Do not replace the connector housing or terminal only.

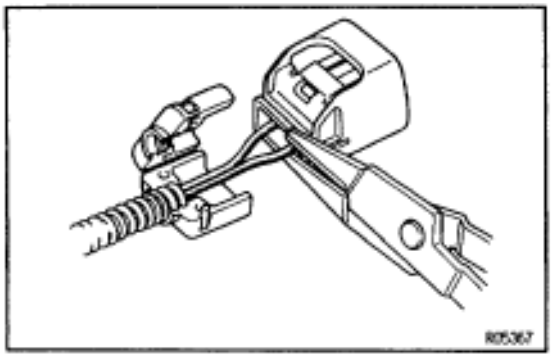

1. DISCONNECT WIRE HARNESS AT VEHICLE SIDE

(a) Remove the cover at the rear of the connector housing and expose the wire harness.

(b) Cut the wire harness behind the connector housing.

HINT: The operation is done more easily if the wire harness is left as long as possible.

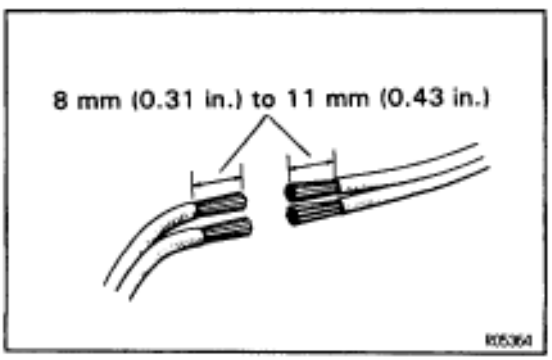

2. CONNECT FRONT AIRBAG SENSOR WIRE HARNESS AT VEHICLE SIDE AND REPAIR WIRE

(a) Start stripping at least 8 mm (0.31 in.) to 11 mm (0.43 in.) away from the end of the existing harness at vehicle side and also from the end of the repair wire.

NOTICE: Take care not to damage the wire when stripping the wire harness lead. After finishing the operation, visually inspect the wire. If there is any damage, do the operation again.

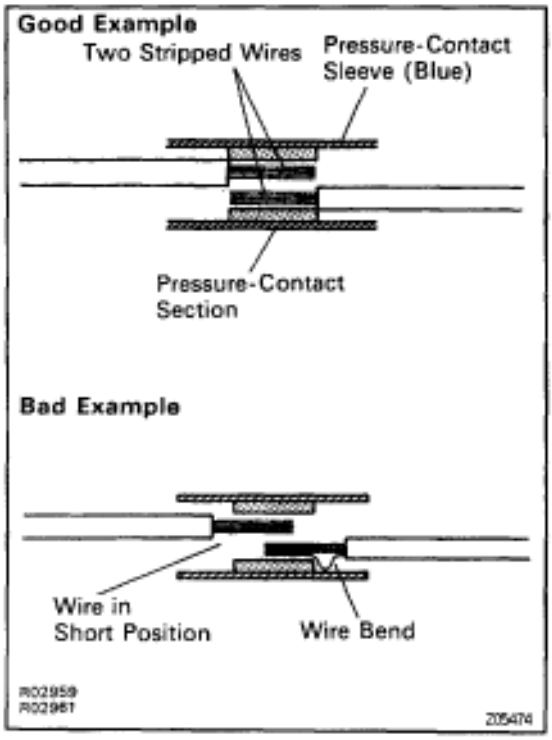

(b) Overlap the 2 stripped wire ends inside of the pressure–contact sleeve as illustrated in the left.
HINT: The blue pressure–contact sleeve (Part No. 82999–12020) is available individually.

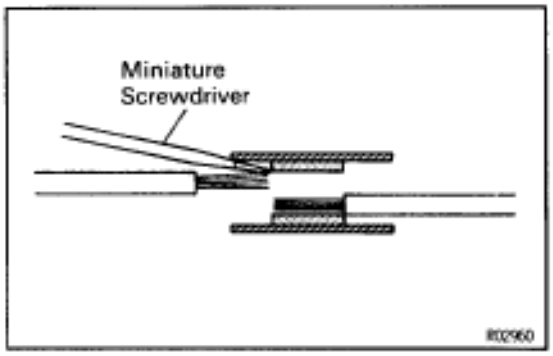

HINT: You might find it easier if you use a miniature screwdriver as a guide as you insert wires into the sleeve.

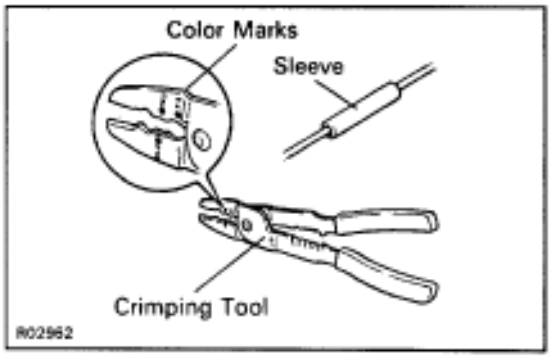

(c) The crimping tool (AMP Part No. 169060) has color marks on it. Place the sleeve in the correct section of the tool according to the color of the sleeve itself.

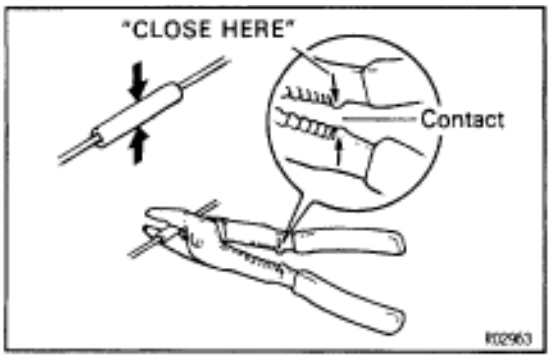

(d) With the center of the sleeve correctly placed between the crimping jaws, squeeze the crimping tool until either end comes into contact at the section marked by "CLOSE HERE".
HINT: Check to see that the sleeve and wires are still in the correct position before closing the crimping tool ends with steady pressure.

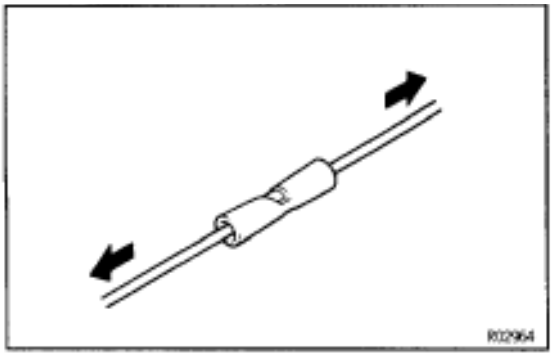

(e) Pull the joined wires to either end. Make sure that they are joined firmly by the sleeve.
NOTICE: If the joined wires come loose the splice is defective, so replace the sleeve and repeat the procedure.

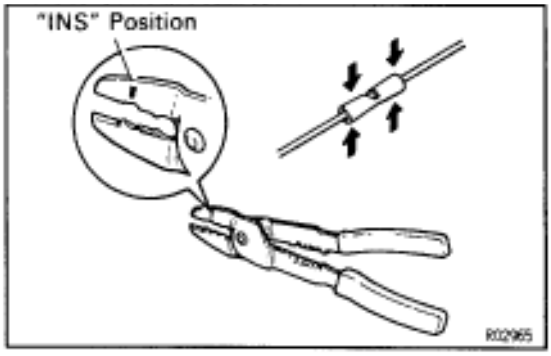

(f) Crimp both ends of the sleeve with the crimping tool at the "INS" position.

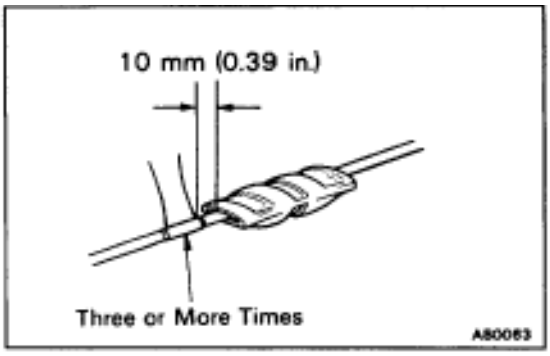

3. PROTECT JOINED SECTION

Wrap silicon tape around the joins to protect them from water.
HINT:

- Before starting the operation, thoroughly wipe dirt and grease off the sections to be joined.
- If the adhesive surfaces of 2 tapes come in contact, they will stick together and will not come apart, so do not remove the backing film except when using the tape.
- Do not let oil and dust, etc., get on the tape surface.

(a) Ready about 100 mm (3.94 in.) of silicon tape (Part No. 08231–00045) and peel off the film.
(b) Stretch the silicon tape until its width is reduced by half.
(c) About 10 mm (0.39 in.) from the end of the pressure contact sleeve, wrap the silicon tape around the sleeve 3 or more times while stretching the tape.

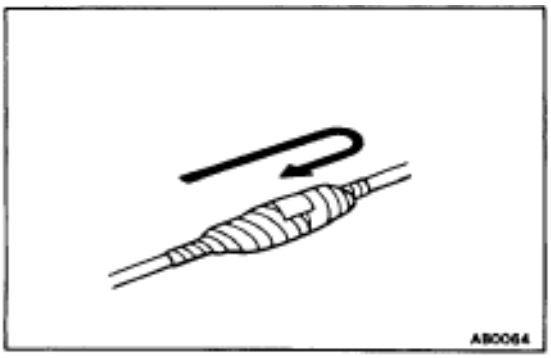

(d) Wrap the remaining part of sleeve with half of the tape overlapping at each turn.
(e) Firmly wrap the tape 2 times or more about 10 mm (0.39 in.) from the other end of the pressure–contact sleeve, then wrap the tape back towards the start again and firmly finish winding the tape around the center of the sleeve.

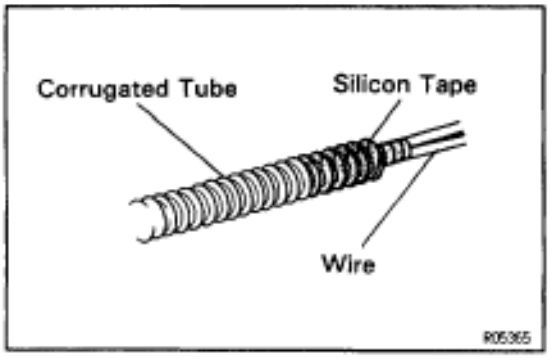

(f) Fix the corrugated tube to the wire using silicon tape.

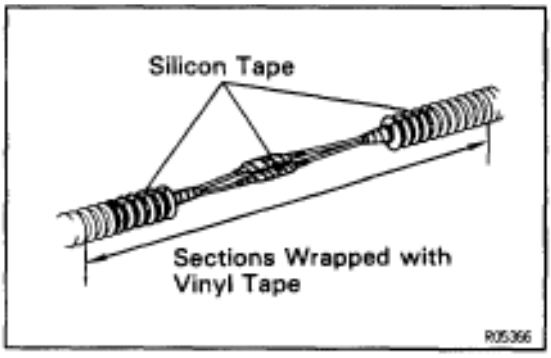

(g) After applying the silicon tape, apply vinyl tape on the corrugated tube of repair wire side over to the corrugated tube of vehicle wire harness side.

TROUBLESHOOTING

HOW TO PROCEED WITH TROUBLESHOOTING

Perform troubleshooting in accordance with the procedure on the following pages.

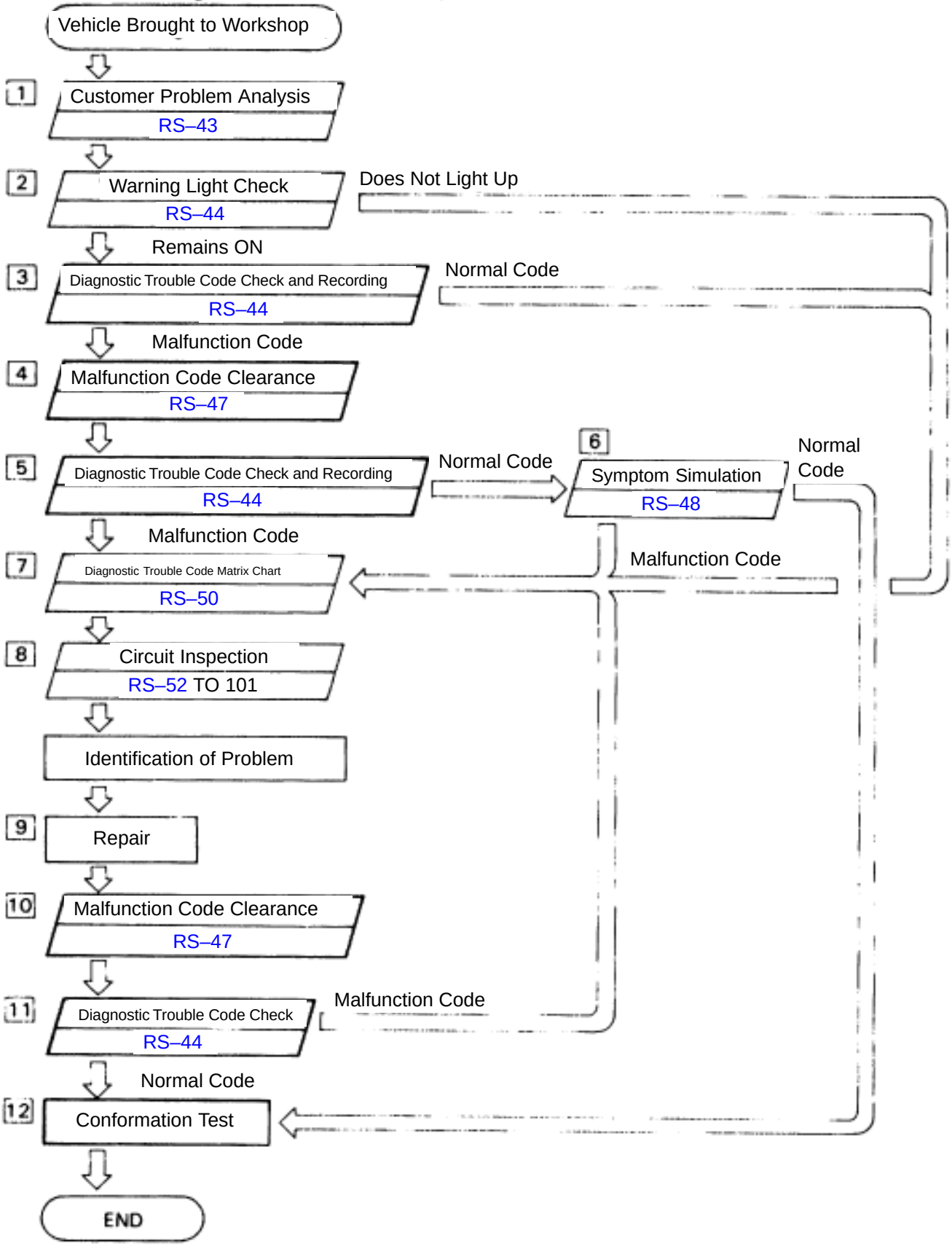

Step 3, 4, 5, 10, 11, 12 : Diagnostic steps permitting the use of The TOYOTA hand–held tester.

CUSTOMER PROBLEM ANALYSIS CHECK SHEET

Supplemental Restraint System Check Sheet

Inspector's Name:

Customer's Name		**Registration No.**	
		Registration Year	/ /
		Frame No.	
Date Vehicle Brought In	/ /	**Odometer Reading**	km Miles

Date Problem First Occurred	/ /
Weather	• Fine • Cloudy • Rainy • Snowy • Other_ _ _ _ _ _ _
Temperature	Approx. ˚C (˚F)

Vehicle Operation	• Starting • Idling • Driving [• Constant speed • Acceleration • Deceleration • Other_]
Road Conditions	
Details of Problem	

Vehicle Inspection, Repair History Prior to Occurrence of Malfunction (Including Supplemental Restraint System)	

Diagnosis System Inspection

SRS Warning Light Inspection	1st Time	• Remains ON • Sometimes Lights Up • Does Not Light Up
	2nd Time	• Remains ON • Sometimes Lights Up • Does Not Light Up
Diagnostic Trouble Code Inspection	1st Time	• Normal Code • Malfunction Code [Code]
	2nd Time	• Normal Code • Malfunction Code [Code.]

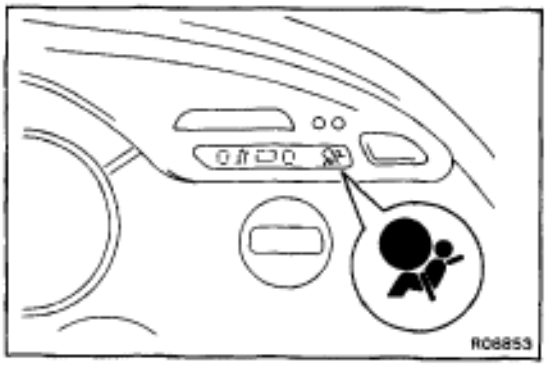

DIAGNOSIS INSPECTION

SRS warning light check

(a) Turn the ignition switch to ACC or ON and check that the SRS warning light lights up.

(b) Check that the SRS warning light goes out after approx. 6 seconds.

HINT:

- When the ignition switch is at ACC or ON and the SRS warning light remains on or flashes, the center airbag sensor assembly has detected a malfunction code.
- If, after approx. 6 seconds have elapsed, the SRS warning light sometimes lights up or the SRS warning light light up even when the ignition switch is OFF, a short in the SRS warning light circuit can be considered likely. Proceed to ”SRS warning light system” on page RS–97.

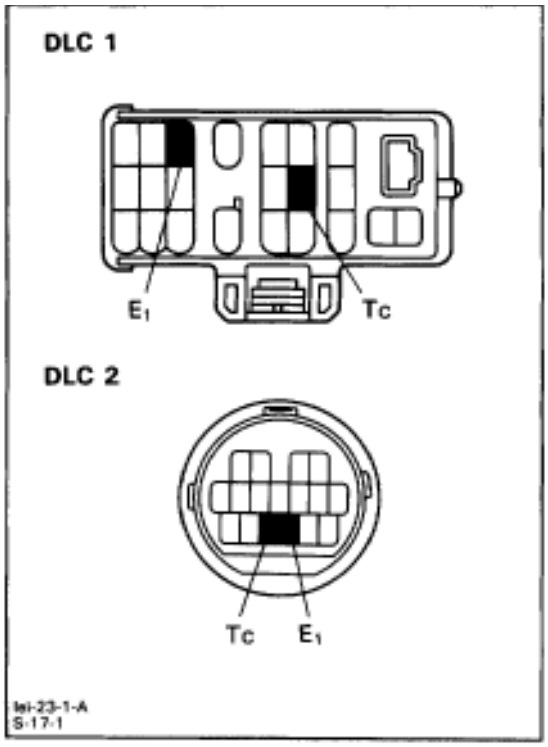

Diagnostic trouble code check

Using diagnosis check wire:

1. OUTPUT DIAGNOSTIC TROUBLE CODE

(a) Turn the ignition switch to ACC or ON position and wait approx. 20 seconds.

(b) Using SST, connect terminals Tc and E_1 of the DLC1 or DLC2.

SST 09843–18020

NOTICE: Never make a mistake with the terminal connection position as this will cause a malfunction.

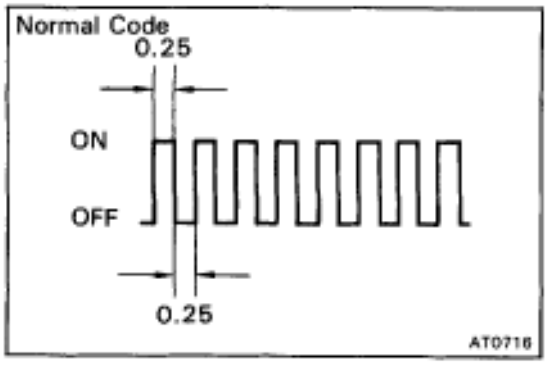

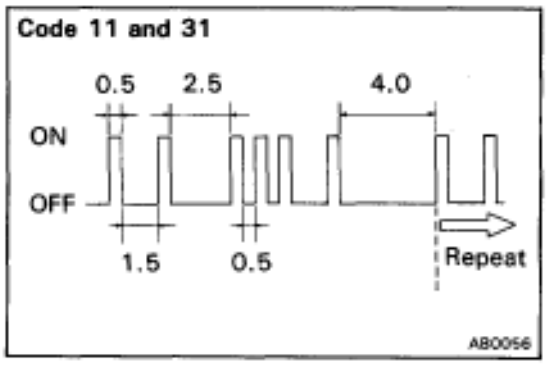

2. READ DIAGNOSTIC TROUBLE CODE

Read the 2–digit diagnostic trouble code as indicated by the number of times the SRS warning light blinks. As an example, the blinking patterns, normal, 11 and 31 are as shown on the illustration.

- Normal code indication
  The light will blink 2 times per second.
- Malfunction code indication
  The number represented by the first blinking code output indicates the first digit of a 2–digit diagnostic trouble output.
  After a 1.5 second pause, the second blinking code will indicate the second digit.
  If there are 2 or more codes, there will be a 2.5 second pause between each code. After all the codes have been output, there will be a 4.0 second pause and they will all be repeated.

HINT:

- In the event of a number of trouble codes, indication will start from the smallest numbered code.
- If it does not output a diagnostic trouble code or outputs a diagnostic trouble code without terminal connection, proceed to the Tc terminal circuit inspection on page RS–99.

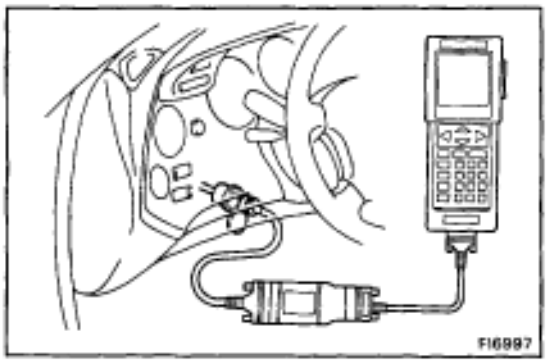

Using TOYOTA hand–held tester:

(a) Hook up the TOYOTA hand–held tester to the DLC1 or DLC2.
(b) Read the diagnostic trouble codes by following the prompts on the tester screen.
HINT: Please refer to the TOYOTA hand–held tester operator's manual for further details.

Diagnostic trouble codes

DTC No.	Blink Pattern	Diagnosis	Trouble Area	SRS Warning Light
*1 (Normal)	 FI1401	• System normal	–	OFF
		• Source voltage drop	• Battery • Center airbag sensor assembly	ON
11	 AB0057	• Short in squib circuit or front airbag sensor circuit (to ground) • Front airbag sensor center airbag sensor assembly malfunction	• Squib (driver airbag and front pas–senger airbag) • Front airbag sensor • Spiral cable • Center airbag sensor assembly • Wire harness	ON
12	 FI1389	• Short in squib circuit (to B+) • Open in front airbag sensor circuits	• Squib (driver airbag and front pas–senger airbag) • Front airbag sensor • Spiral cable • Center airbag sensor assembly • Wire harness	ON
13	 FI1390	• Short in driver airbag squib circuit (between D^+ wire harness and D^- wire harness)	• Steering wheel pad (squib) • Spiral cable • Center airbag sensor assembly • Wire harness	ON
14	 FI1391	• Open in driver airbag squib circuit	• Steering wheel pad (squib) • Spiral cable • Center airbag sensor assembly • Wire harness	ON
15	 AB0058	• Open in front airbag sensor circuit	• Front airbag sensor • Center airbag sensor assembly • Wire harness	ON
22 *2	 FI1392	• SRS warning light system mal–function	• SRS warning light • Center airbag sensor assembly • Wire harness	ON
31	 FI1394	• Center airbag sensor assembly malfunction	• Center airbag sensor assembly	ON
53	 R05169	• Short in front passenger airbag squib circuit	• Front passenger airbag assembly (squib) • Center airbag sensor assembly • Wire harness	ON
54	 R05170	• Open in front passenger airbag squib circuit	• Front passenger airbag assembly (squib) • Center airbag sensor assembly • Wire harness	ON

HINT:

*1

- When the SRS warning light remains lit up and the diagnostic trouble code is the normal code, this means a source voltage drop.
  This malfunction is not stored in memory by the center airbag sensor assembly and if the power source voltage returns to normal, after approx. 10 seconds the SRS warning light will automatically go out.

*2

- Code 22 is recorded when a malfunction occurs in the SRS warning light system.
  If an open malfunction occurs in the SRS warning light system, the SRS warning light does not light up, so that until the malfunction is repaired, the diagnostic trouble codes (including code 22) cannot be confirmed.
- When 2 or more codes are indicated, the lowest numbered code will appear first.
- If a code not listed on the chart is displayed, the center airbag sensor assembly is faulty.

Diagnostic trouble code clearance

Using diagnosis check wire:

(a) Connect the 2 service wires to terminals Tc and AB of DLC1 or DLC2.

(b) Turn the ignition switch to ACC or ON and wait approx. 6 seconds.

(c) Starting with the Tc terminal, apply body ground alternately to terminal Tc and terminal AB twice each in cycles of 1.0 seconds. Confirm that body ground is absolute. Finally, keep applying body ground to terminal Tc.

HINT: When alternately grounding terminals Tc and AB, release ground from one terminal and immediately apply it to the other terminal within an interval of 0.2 second. If diagnostic trouble codes do not clear, repeat the above procedure until the codes are cleared.

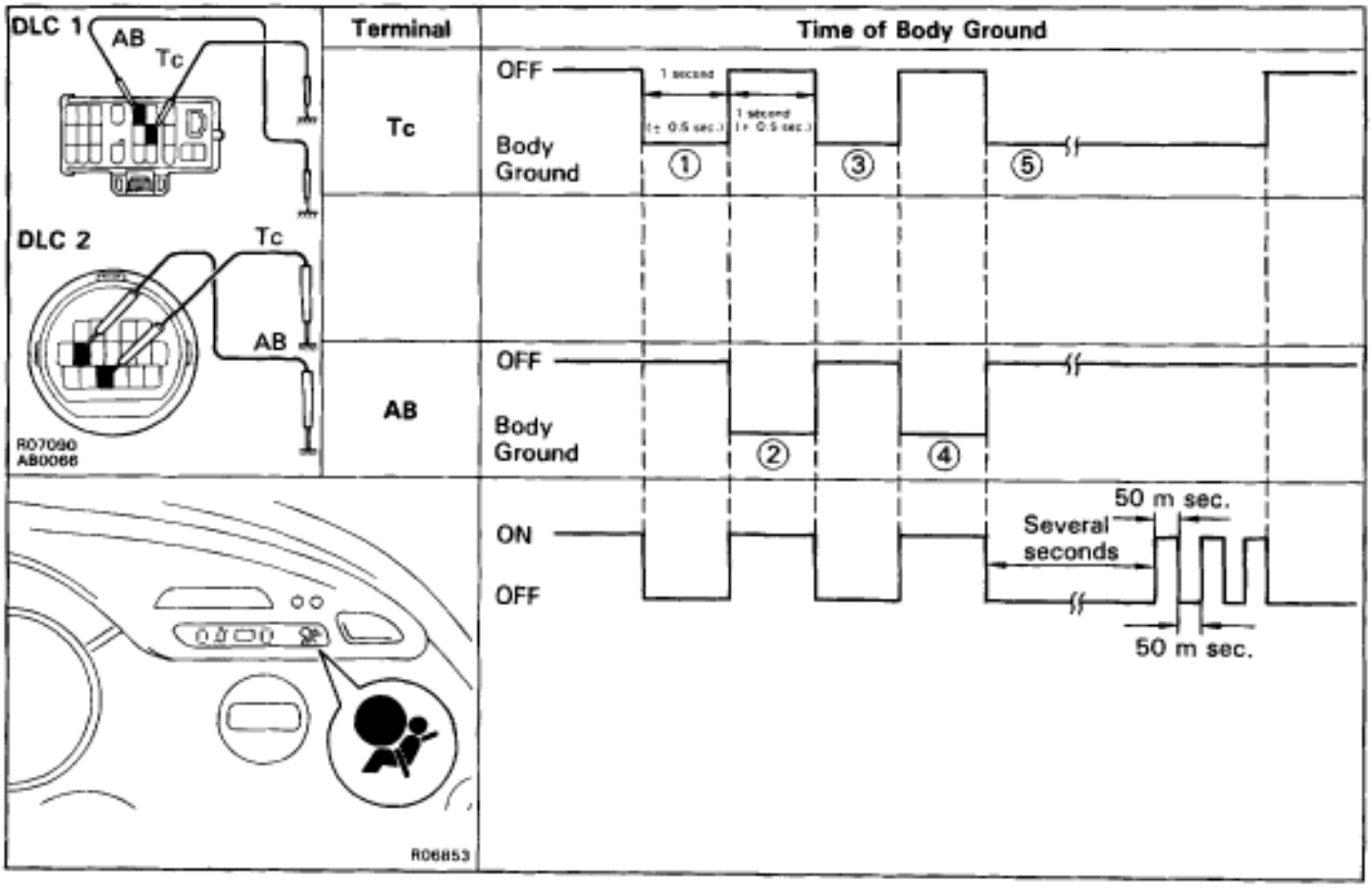

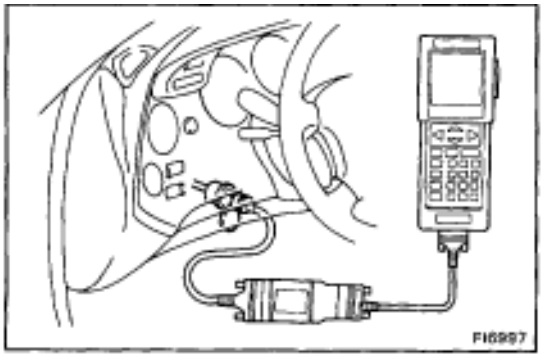

(d) Several seconds after doing the clearing procedure, the SRS warning light will blink in a 50 m sec. cycle to indicate the codes have been cleared.

Using TOYOTA hand–held tester:

(a) Hook up the TOYOTA hand–held tester to the DLC1 or DLC2.

(b) Clear the diagnostic trouble codes by following the prompts on the tester screen.

HINT: Please refer to the TOYOTA hand–held tester operator's manual for further details.

SYMPTOM SIMULATION

“Intermittent troubles or problems” are the malfunctions about which the customer has a complaint, but which do not occur and cannot be confirmed in the workshop. The intermittent problems also include complaints about the SRS warning light going on and off erratically.

The self–diagnostic system stores the circuit of the intermittent problem in memory even if the ignition switch is turned off.

For accurate diagnosis of the problems, ask the customer to obtain as much information as possible following the customer problem analysis check sheet (See page RS–43) and try to reproduce the intermittent problem.

The problem simulation methods described below are the effective ways to reproduce the problem conditions by applying vibration, heat, and humidity.

1 VIBRATION METHOD: When vibration seems to be the major cause.

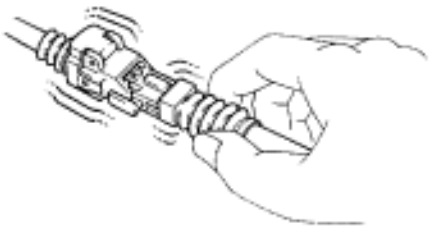
AB0245

CONNECTORS

Slightly shake the connector vertically and horizontally.

Inspection of connectors

(a) Does the wire harness connecting with its corresponding part have insufficient slack?

(b) Are the terminals dirty?

(c) Are the terminals making loose contact due to terminals spread?

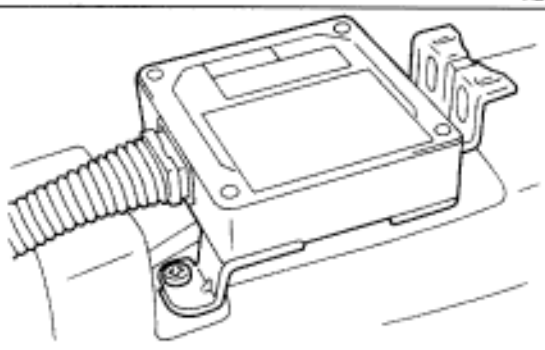
R06852

WIRE HARNESS

Slightly shake the wire harness vertically and horizontally. Thoroughly check the connector joint, the fulcrum of the vibration and the wiring opening in the engine/passenger compartment panel.

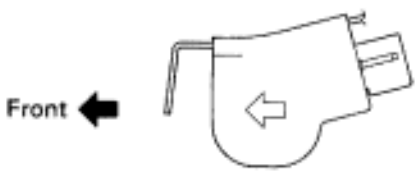

AB0332

PARTS AND SENSORS

Gently tap the part or sensor considered to be the problem caused and check if the malfunction will occur.

CAUTION: Do not apply vibration to the center airbag sensor assembly.

2 HEAT METHOD: When the problem seems to occur when the suspect area is heated.

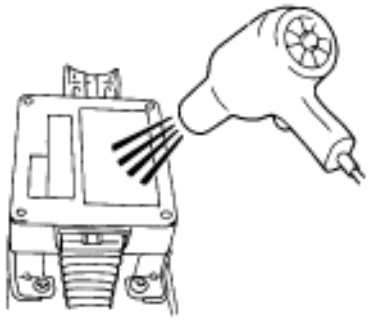

Heat the component that is likely the cause of the malfunction with a hair dryer or similar object. Check to see if the malfunction will occur.

NOTICE:

- **Do not heat to more than 60°C (140°F) (Temperature limit that the component can be touched with a hand.).**
- **Do not apply heat directly to any part in the ECU.**

3 WATER SPRINKLING METHOD: When the malfunction seems to occur on a rainy day or in a high–humidity condition.



Sprinkle water onto the vehicle and check to see if the malfunction will occur.

NOTICE: Never apply water directly onto the electronic components.

HINT:

- If the vehicle leaks water, the water may contaminate the ECU. When testing a vehicle with a water leakage problem, special caution must be paid.

4 OTHER: When the malfunction seems to occur when electrical load is excessive.



Turn on all electrical loads including the heater blower, headlights, rear window defogger, etc. and check to see if the malfunction will occur.

DIAGNOSTIC TROUBLE CODE MATRIX CHART

If a malfunction code is displayed during the diagnostic trouble code check, check the circuit listed for that code in the table below (Proceed to the page given for that circuit.).

DTC No.	Diagnosis	Page
(Normal)*1	• Source voltage drop	RS–52
11	• Short in squib circuit or front airbag sensor circuit (to ground) • Front airbag sensor or center airbag sensor assembly malfunction	RS–54
12	• Short in squib circuit (to B+) • Open in front airbag sensor circuits	RS–60
13	• Short in D squib circuit (between D^+ wire harness and D^- wire harness)	RS–66
14	• Open in D squib circuit	RS–73
15	• Open in front airbag sensor circuit	RS–78
22*2	• SRS warning light system malfunction	RS–82
31	• Center airbag sensor assembly malfunction	RS–86
53	• Short in P squib circuit	RS–87
54	• Open in P squib circuit	RS–92

HINT:

*1 When the SRS warning light remains lit up and the diagnostic trouble code is the normal code, this means a source voltage drop.

*2 Code 22 is recorded when a malfunction occurs in the SRS warning light system.
If an open malfunction occurs in the SRS warning light system, the SRS warning light does not light up, so that until the malfunction is repaired, the diagnostic trouble codes (including code 22) cannot be confirmed.

PROBLEM SYMPTOM CHART

Proceed with troubleshooting of each circuit in the table below.

Problem Symptom	Inspection Item	Page
• With the ignition switch at ACC or ON, the SRS warning light sometimes lights up after approx. 6 seconds have elapsed. • SRS warning light is always lit up even when ignition switch is in the LOCK position.	• SRS warning light system (Always lit up, when ignition switch is in LOCK position.)	RS–96
• Diagnostic trouble code not displayed. • SRS warning light is always lit up with the DTC check procedure. • Diagnostic trouble code displayed without Tc and E_1 terminal correction.	• Tc terminal circuit	RS–98

CENTER AIRBAG SENSOR ASSEMBLY CONNECTOR

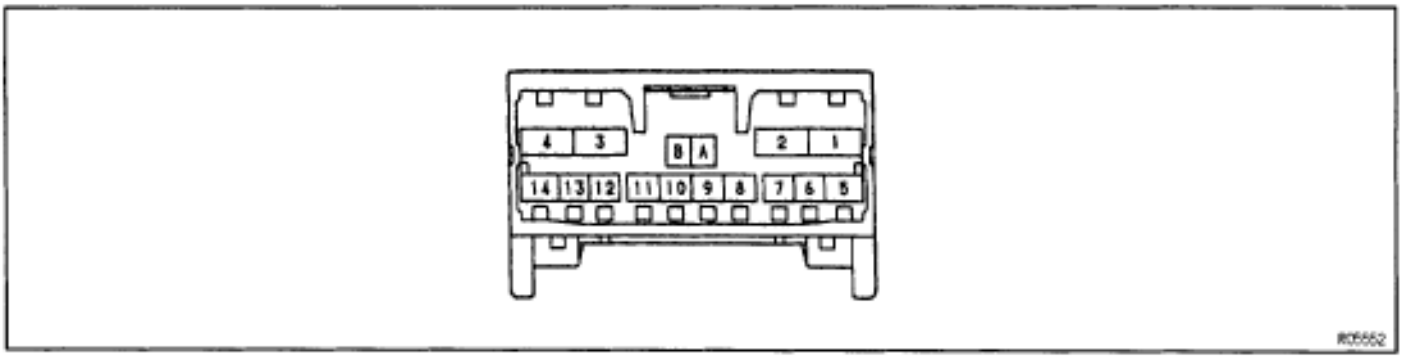

No.	Symbol	Terminal Name
A	—	Electrical Connection Check Mechanism
B	—	Electrical Connection Check Mechanism
1	P^-	Squib ⊖ (Front Passenger)
2	P^+	Squib ⊕ (Front Passenger)
3	D^+	Squib ⊕ (Driver)
4	D^-	Squib ⊖ (Driver)
5	E_1	Ground
6	E_2	Ground
7	Tc	Diagnosis
8	+SL	Front Airbag Sensor LH ⊕
9	–SL	Front Airbag Sensor LH ⊖
10	–SR	Front Airbag Sensor RH ⊖
11	+SR	Front Airbag Sensor RH ⊕
12	LA	SRS Warning Light
13	IG_2	Power Source (IGN Fuse)
14	ACC	Power Source (CIG Fuse)

CIRCUIT INSPECTION

DTC (Normal) Source Voltage Drop

CIRCUIT DESCRIPTION

The SRS is equipped with a voltage–increase circuit (DC–DC converter) in the center airbag sensor assembly in case the source voltage drops.
When the battery voltage drops, the voltage–increase circuit (DC–DC converter) functions to increase the voltage of the SRS to normal voltage.
The diagnostic system malfunction display for this circuit is different to other circuits–when the SRS warning light remains lit up and the diagnostic trouble code is a normal code, voltage source drop is indicated.
Malfunction in this circuit is not recorded in the center airbag sensor assembly, and the voltage source returns to normal, after approx. 10 seconds the SRS warning light automatically goes off.

DTC No.	Diagnosis
(Normal)	Voltage source drop.

WIRING DIAGRAM

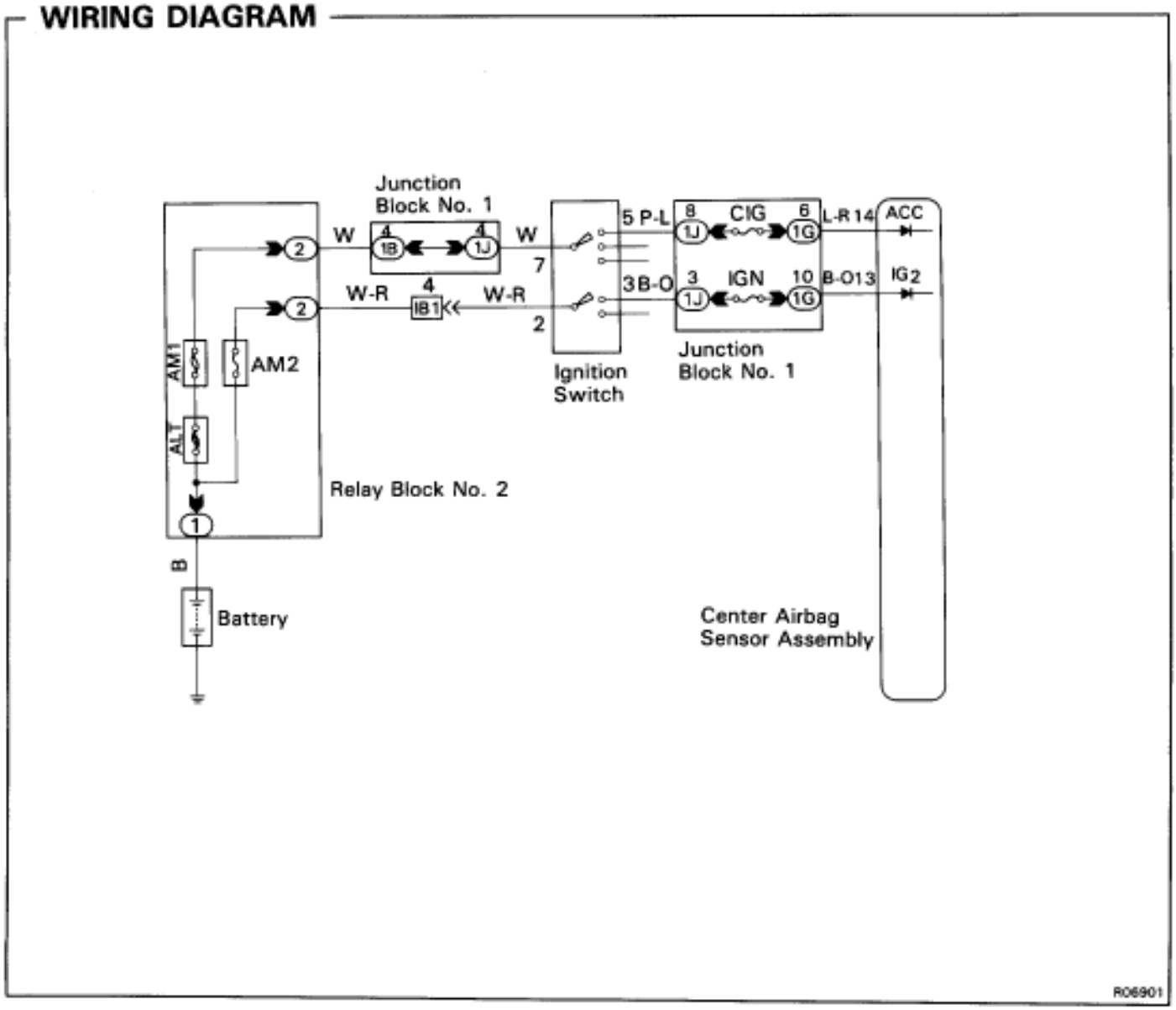

INSPECTION PROCEDURES

[P] Preparation **[C]** Check

1 Preparation.

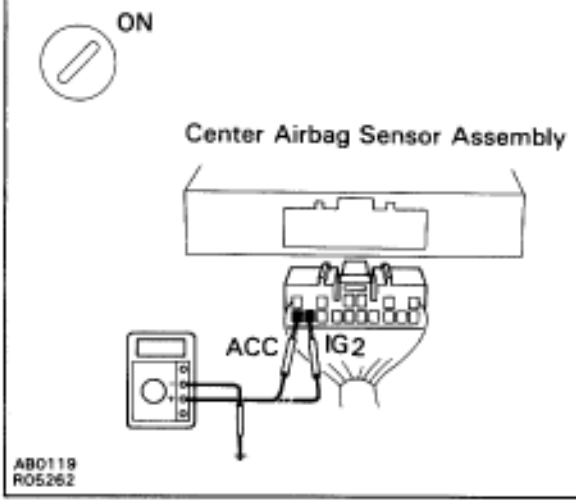

P

(1) Turn ignition switch to LOCK.
(2) Disconnect center airbag sensor assembly connector.
(3) Turn ignition switch ON. But do not start engine.
(4) Measure voltage at IG_2 or ACC on connector wire harness side of center airbag sensor assembly and operate electric system (defogger, wiper, headlight, heater blower, etc.).
Voltage: 6 V — 11.5 V at IG_2 and ACC.
(5) Turn electric system switch OFF.
(6) Turn ignition switch to LOCK.
(7) Remove voltmeter and connect center sensor assembly connector.

2 Does SRS warning light turn off?



P Turn ignition switch ON.

C Operate electric system checked in **[1]** (4) and check that SRA warning light goes off.

Turn ignition switch ON.

YES

NO **Check diagnostic trouble code, and if a malfunction code is output, perform troubleshooting according to malfunction code. If a normal code is output, replace center airbag sensor assembly.**

**Check battery and charging system.
(See charging system section)**

DTC 11 Short in Squib Circuit or Front Airbag Sensor Circuit (to Ground)

CIRCUIT DESCRIPTION

The squib circuit consists of the center airbag sensor assembly, spiral cable, steering wheel pad and front passenger airbag assembly. It causes the SRS to deploy when the SRS deployment conditions are satisfied.
The front airbag sensor detects the deceleration force in a frontal collision and is located in the front fender on the left and right sides.
For details of the function of each component see FUNCTION OF COMPONENTS on page RS–4.
Diagnostic trouble code 11 is recorded when ground short is detected in the squib circuit or front airbag sensor circuit.

DTC No.	Diagnosis
11	• Short circuit in squib wire harness (to ground). • Squib malfunction. • Short circuit in front airbag sensor + S wire harness (to ground). • Front airbag sensor malfunction. • Short circuit between + S wire harness and – S wire harness of front airbag sensor. • Spiral cable malfunction. • Center airbag sensor assembly malfunction.

WIRING DIAGRAM

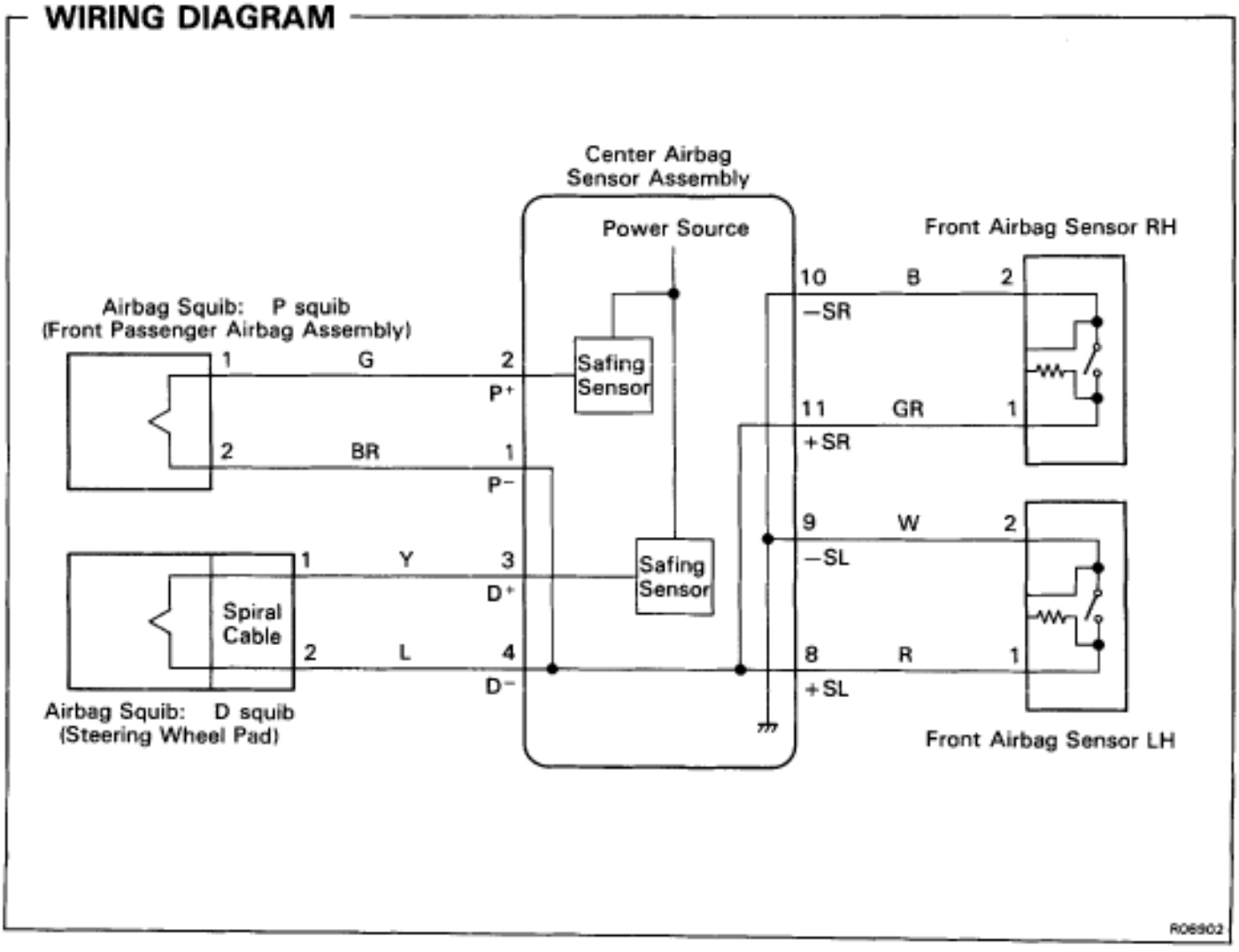

INSPECTION PROCEDURES

[P] Preparation **[C]** Check

1 Preparation.

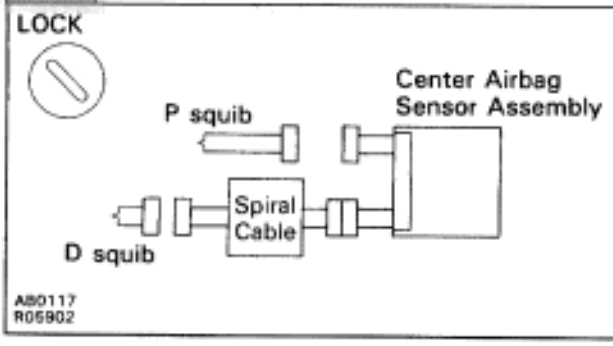

P (1) Disconnect negative (–) terminal cable from the battery, and wait at least 90 seconds.
(2) remove steering wheel pad (See page RS–10).
(3) Disconnect connector of front passenger airbag assembly (See page RS–20).

Caution

Store the steering wheel pad with the front surface facing upward.

2 Check front airbag sensor circuit. (Measure resistance between terminals +SR and —SR, +SL and —SL of center airbag sensor assembly connector.)

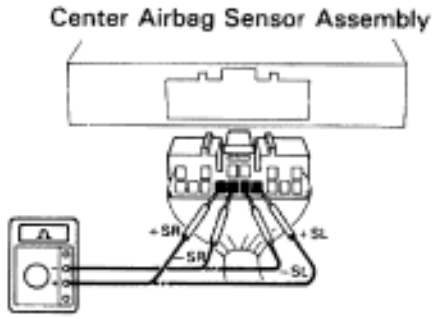

P Disconnect center airbag sensor assembly connector.

C Measure resistance between terminals +SR and —SR, +SL and —SL of harness side connector of center airbag sensor assembly.

OK **Resistance: 744 Ω — 885 Ω**

OK

NG Go to step **9**.

3 Check front airbag sensor circuit. (Measure resistance between terminals +SR, +SL of center airbag sensor assembly connector and body ground.)

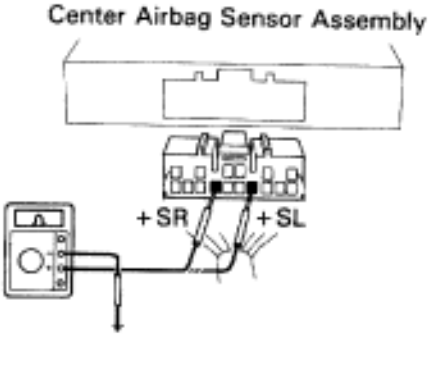

C Measure resistance between terminals +SR, +SL of harness side connector of center airbag sensor assembly and body ground.

OK **Resistance: 1 MΩ Higher**

OK

NG **Repair or replace harness or connector between center airbag sensor assembly and front airbag sensor.**

4 Check D squib circuit.

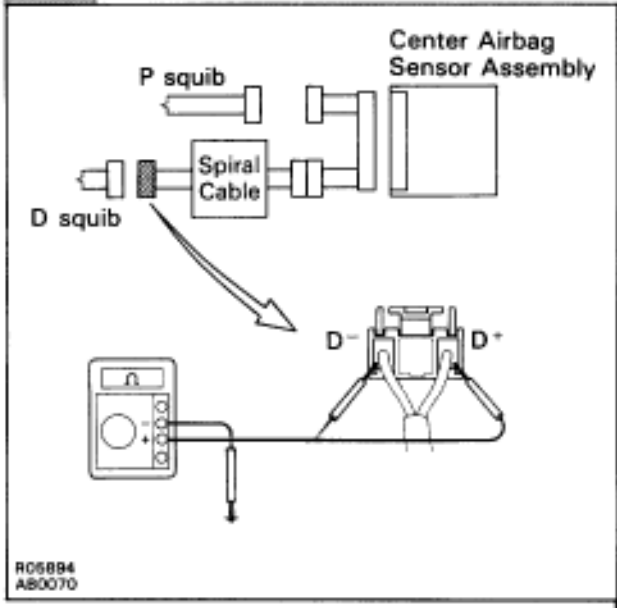

C For the connector (on the spiral cable side) between the spiral cable and steering wheel pad, measure the resistance between D^+, D^- and body ground.

OK **Resistance: 1 MΩ or Higher**

OK

NG > **Go to step 10.**

5 Check P squib circuit.

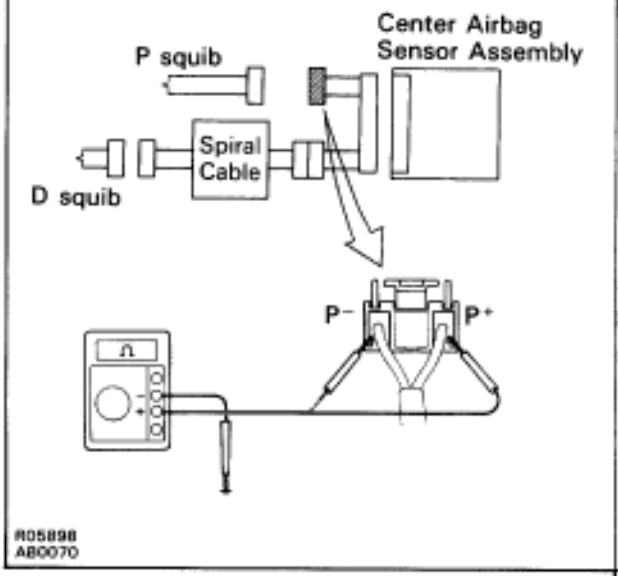

C For the connector (on the center airbag sensor assembly side) between the center airbag sensor assembly and front passenger airbag assembly, measure the resistance between P^+, P^- and body ground.

OK **Resistance: 1 MΩ or Higher**

OK

NG > **Repair or replace harness or connector between center airbag sensor assembly and front airbag sensor.**

6 Check center airbag sensor assembly.

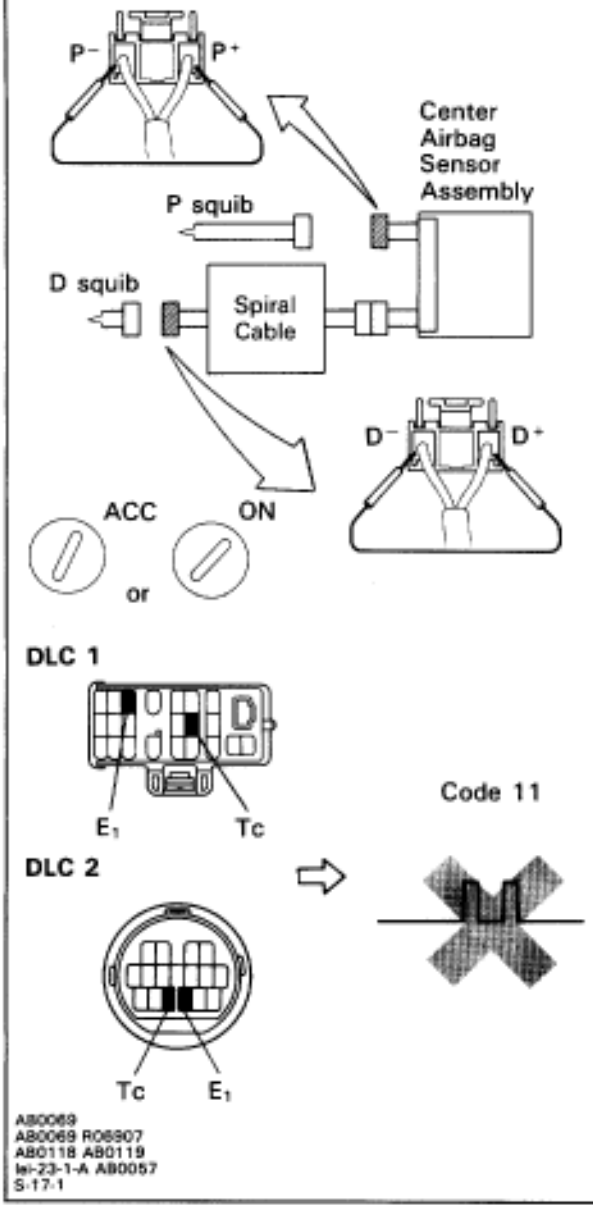

P

(1) Connect connector to center airbag sensor assembly.
(2) Using a service wire, connect D^- and D^- on spiral cable side of connector between spiral cable and steering wheel pad.
(3) Using a service wire, connect P^+ and P^- on center airbag sensor assembly side of connector between center airbag sensor assembly and front passenger airbag assembly.
(4) Connect negative(–) terminal cable to battery, and wait at least 2 seconds.

C

(1) Turn ignition switch to ACC or ON and wait at least 20 seconds.
(2) Clear malfunction code stored in memory (See page RS–47)
(3) Turn ignition switch to LOCK, and wait at least 20 seconds.
(4) Turn ignition switch to ACC or ON, and wait at least 20 seconds.
(5) Using SST, connect terminals Tc and E_1 of DLC1 or DLC2.
SST 09843–18020
(6) Check diagnostic trouble code.

OK **Diagnostic trouble code 11 is not output.**

Hint Codes other than code 11 may be output at this time, but they are not relevant to this check.

OK

NG **Replace center airbag sensor assembly.**

7 Check D squib.

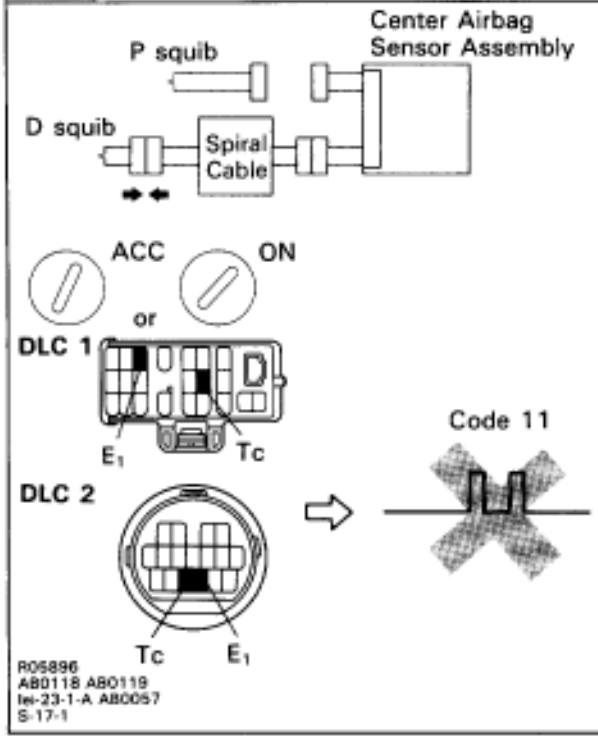

P
(1) Turn ignition switch to LOCK.
(2) Disconnect negative (–) terminal cable from the battery, and wait at least 90 seconds.
(3) Connect steering wheel pad connector.
(4) Connect negative(–) terminal cable to battery, and wait at least 2 seconds.

C
(1) Turn ignition switch to ACC or ON and wait at least 20 seconds.
(2) Clear malfunction code stored in memory. (See page RS–47)
(3) Turn ignition switch to LOCK, and wait at least 20 seconds.
(4) Turn ignition switch to ACC or ON, and wait at least 20 seconds.
(5) Using SST, connect terminals Tc and E_1 of DLC1 or DLC2.
SST 09843–18020
(6) Check diagnostic trouble code.

OK **Diagnostic trouble code 11 is not output.**

Hint Codes other than code 11 may be output at this time, but they are not relevant to this check.

OK

NG **Replace steering wheel pad.**

8 Check P squib.

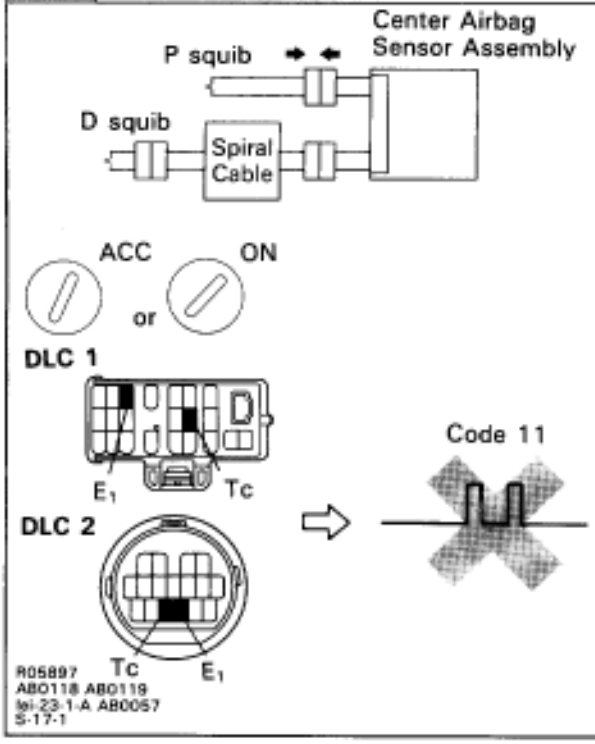

P
(1) Turn ignition switch to LOCK.
(2) Disconnect negative (–) terminal cable from the battery, and wait at least 90 seconds.
(3) Connect front passenger airbag assembly connector.
(4) Connect negative(–) terminal cable to battery, and wait at least 2 seconds.

C
(1) Turn ignition switch to ACC or ON and wait at least 20 seconds.
(2) Clear malfunction code stored in memory. (See page RS–47)
(3) Turn ignition switch to LOCK, and wait at least 20 seconds.
(4) Turn ignition switch to ACC or ON, and wait at least 20 seconds.
(5) Using SST, connect terminals Tc and E1 of DLC1 or DLC2.
SST 09843–18020
(6) Check diagnostic trouble code.

OK **Diagnostic trouble code 11 is not output.**

Hint Codes other than code 11 may be output at this time, but they are not relevant to this check.

OK

NG **Replace front passenger airbag assembly.**

From the results of the above inspection, the malfunctioning part can now be considered normal. To make sure of this, use the simulation method to check. If the malfunctioning part cannot be detected by the simulation method, replace all SRS components including the wire harness.

9 Check front airbag sensor.

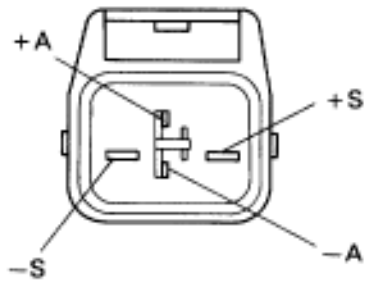

AB0034

P Disconnect front airbag sensor connector.

C Measure resistance between each terminal of front airbag sensor.

OK

Terminal	Resistance
⊕ S – ⊕ A	755 Ω – 885 Ω
⊕ S – ⊖ S	1 MΩ or Higher
⊖ S – ⊖ A	Less than 1 Ω

Notice

- **Do not press ohmmeter probes too strongly against terminals of front airbag sensor.**
- **Make sure the front airbag sensor connector is properly connected.**

OK

NG **Replace front airbag sensor.**

Repair or replace harness or connector between center airbag sensor assembly and front airbag sensor (See page RS–36).

10 Check spiral cable.

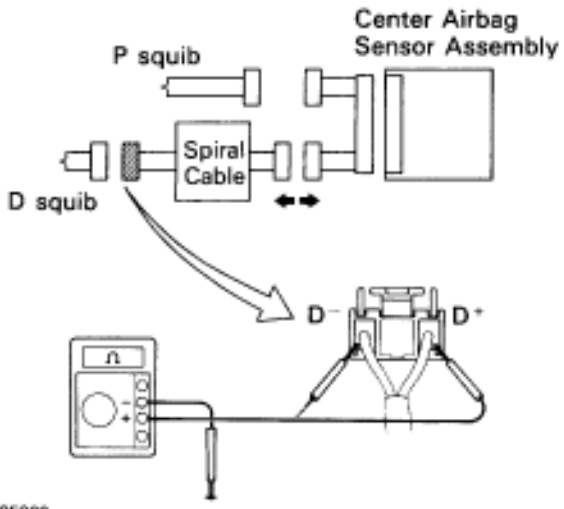

R05899
AB0070

P Disconnect connector between center airbag sensor assembly and spiral cable.

C Measure resistance between D+, D– on spiral cable side of connector between spiral cable and steering wheel pad and body ground.

OK **Resistance: 1 MΩ or Higher**

OK

NG **Repair or replace spiral cable.**

Repair or replace harness or connector between center airbag sensor assembly and spiral cable.

DTC 12 Short in Squib Circuit (to B+)

CIRCUIT DESCRIPTION

The squib circuit consists of the center airbag sensor assembly, spiral cable, steering wheel pad and front passenger airbag assembly. It causes the SRS to deploy when the SRS deployment conditions are satisfied.
The front airbag sensor detects the deceleration force in a frontal collision and is located in the front fender on the left and right sides.
For details of the function of each component, see FUNCTION OF COMPONENTS on page RS–4.
Diagnostic trouble code 12 is recorded when a B+ short is detected in the squib circuit or the front airbag sensor circuit.

DTC No.	Diagnosis
12	• Short circuit in squib wire harness (to B +). • Squib malfunction. • Short circuit in front airbag sensor + S wire harness (to B +). • Front airbag sensors malfunction. • Spiral cable malfunction. • Center airbag sensor assembly malfunction.

WIRING DIAGRAM

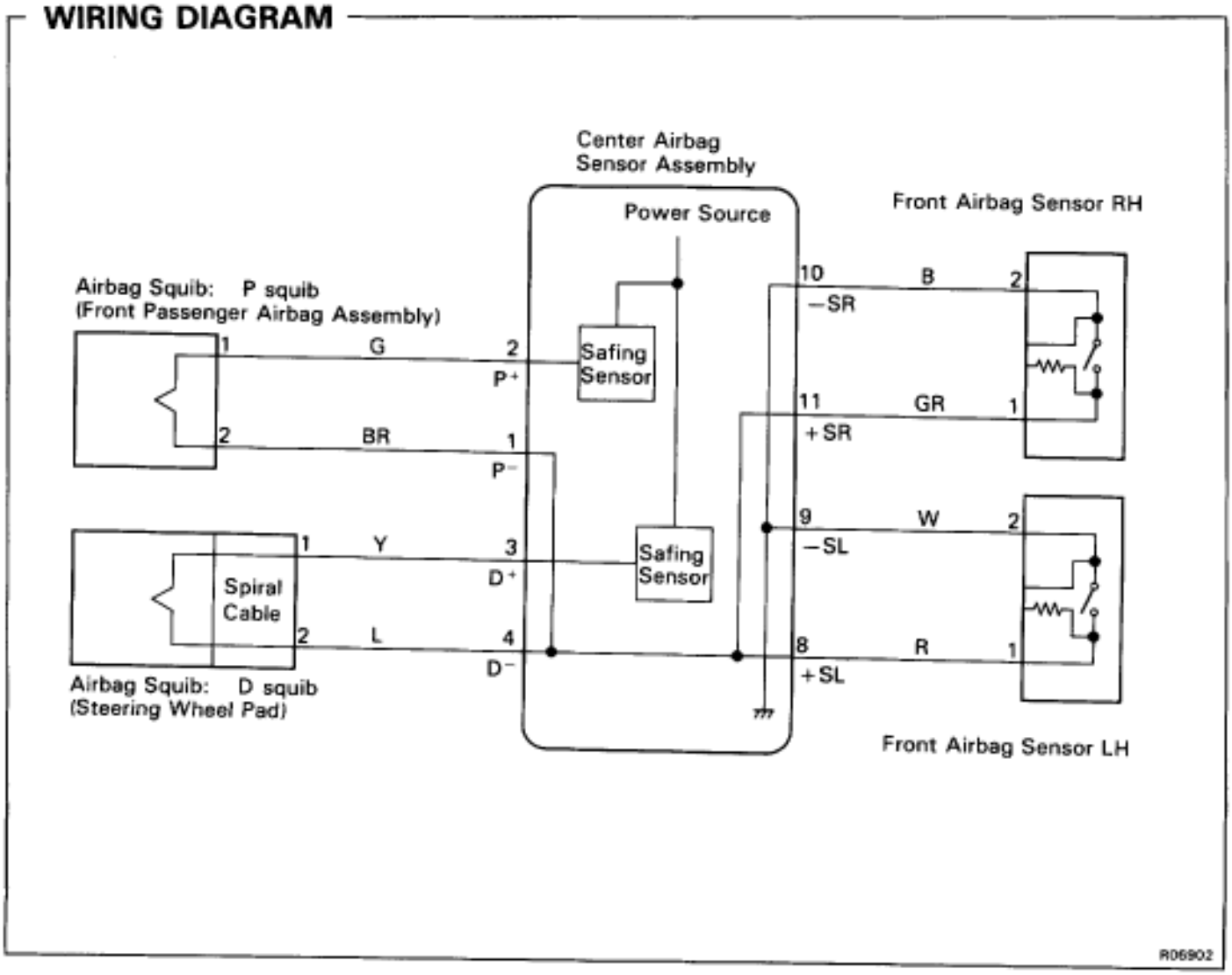

INSPECTION PROCEDURES

[P] Preparation **[C]** Check

1 Preparation.

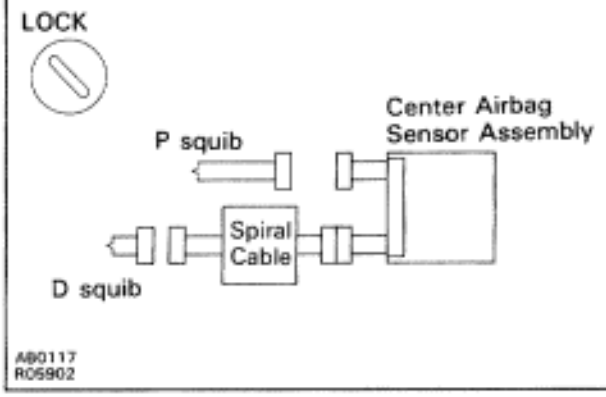

P (1) Disconnect negative (–) terminal cable from the battery, and wait at least 90 seconds.
(2) Remove steering wheel pad (See page RS–10).
(3) Disconnect connector of front passenger airbag assembly (See page RS–20).

Caution

Store the steering wheel pad with the front surface facing upward.

2 Check front airbag sensor circuit. (Measure resistance between terminals +SR and –SR, +SL and –SL of center airbag sensor assembly connector.)

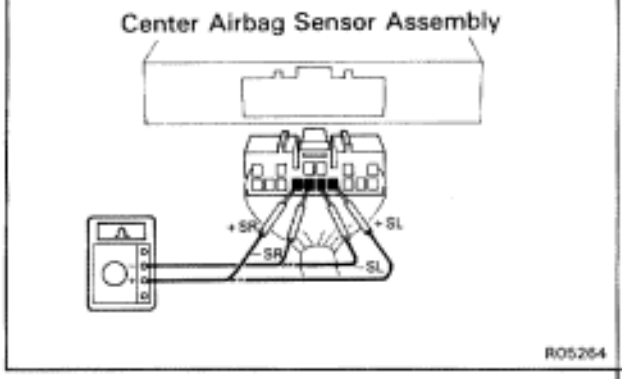

P Disconnect center airbag sensor assembly connector.

C Measure resistance between terminals +SR and –SR, +SL and –SL of harness side connector of center airbag sensor assembly.

OK **Resistance: 755 — 855**

OK

NG **Go to code 15.**

3 Check front airbag sensor circuit. (Measure resistance between terminals +SR or +SL of center airbag sensor assembly connector and body ground.)

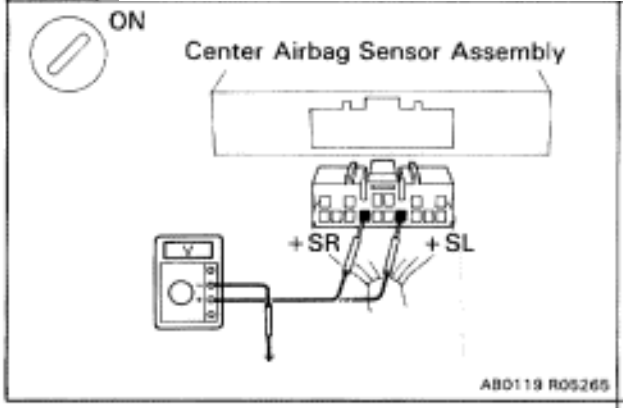

P (1) Connect negative (–) terminal cable to battery.
(2) Turn ignition switch ON.

C Measure voltage between terminals +SR or +SL of harness side connector of center airbag sensor assembly and body ground.

OK **Voltage: 0 — 0.1 V**

OK

NG **Repair or replace harness or connector between center airbag sensor assembly and front airbag sensor (See page RS–36).**

4 Check D squib circuit.

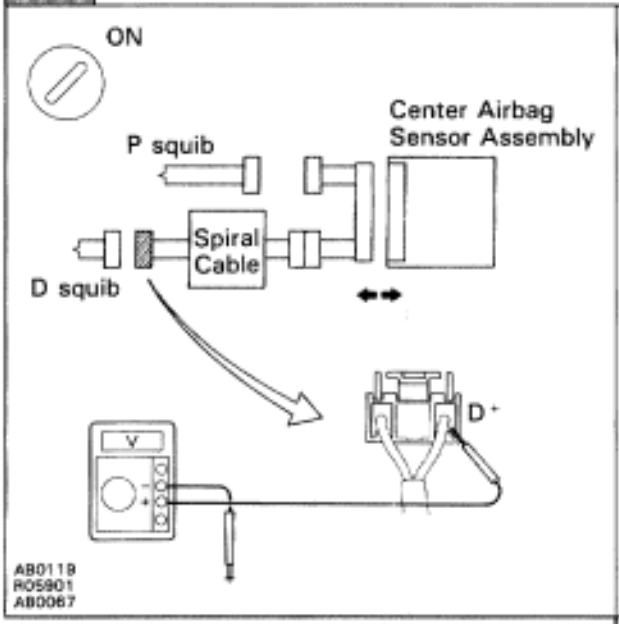

P Disconnect center airbag sensor assembly connector.

C For the connector (on the spiral cable side) between the spiral cable and steering wheel pad, measure the voltage between D^+ and body ground.

OK **Voltage: 0 V**

OK

NG > Go to step 9.

5 Check P squib circuit.

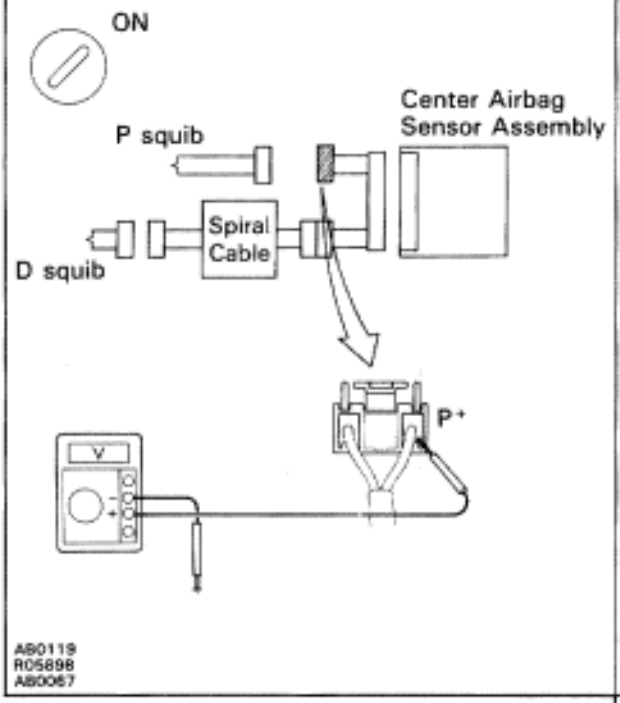

C For the connector for the center airbag sensor assembly side) between center airbag sensor assembly and front passenger airbag assembly, measure the voltage between P^+ and body ground.

OK **Voltage: 0 V**

OK

NG > **Repair or replace harness or connector between the center airbag sensor assembly and front passenger airbag sensor assembly.**

6 Check center airbag sensor assembly.

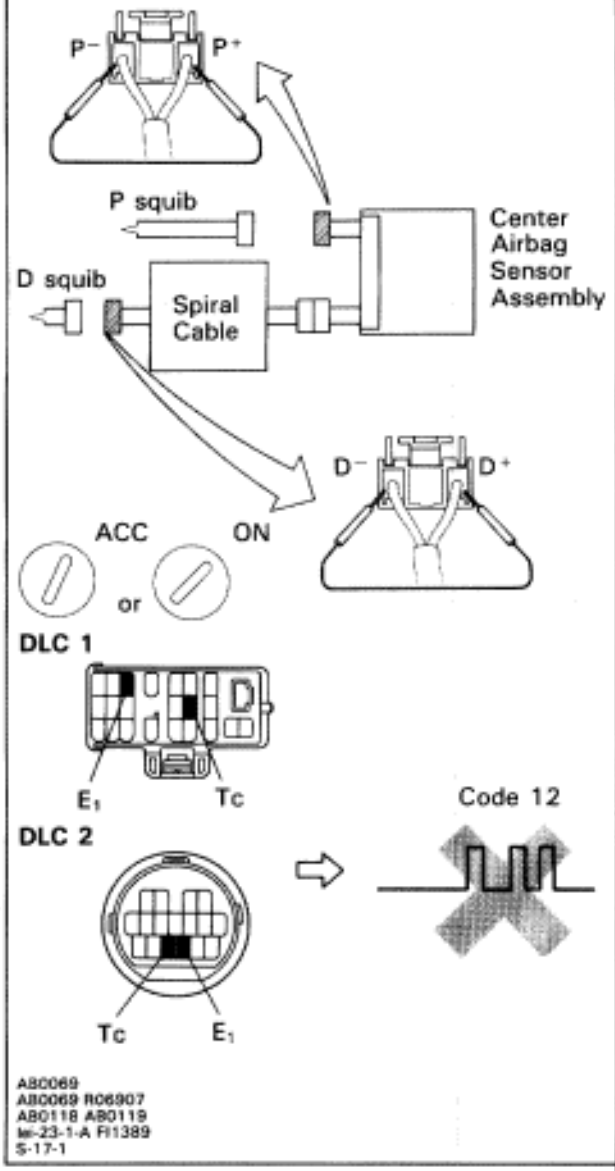

P

(1) Turn ignition switch to LOCK.
(2) Disconnect negative (–) terminal cable from the battery.
(3) Connect connector to center airbag sensor assembly.
(4) Using a service wire, connect P+ and P– on center airbag sensor assembly side of connector between center airbag sensor assembly and from passenger airbag assembly.
(5) Using a service wire, connect P+ and P– on center airbag sensor assembly side of connector between center airbag sensor assembly and front passenger airbag assembly.
(6) Connect negative (–) terminal cable to battery, and wait at least 2 seconds.

C

(1) Turn ignition switch to ACC or ON and wait at least 20 seconds.
(2) Clear malfunction code stored in memory. (See page RS–47)
(3) Turn ignition switch to LOCK, and wait at least 20 seconds.
(4) Turn ignition switch to ACC or ON, and wait at least 20 seconds.
(5) Using SST, connect terminals Tc and E_1 of DLC1 or DLC2.
SST 09843–18020
(6) Check diagnostic trouble code.

OK **Diagnostic trouble code 12 is not output.**

Hint Codes other than code 12 may be output at this time, but they are not relevant to this check.

OK

NG **Replace center airbag sensor assembly.**

7 Check D squib.

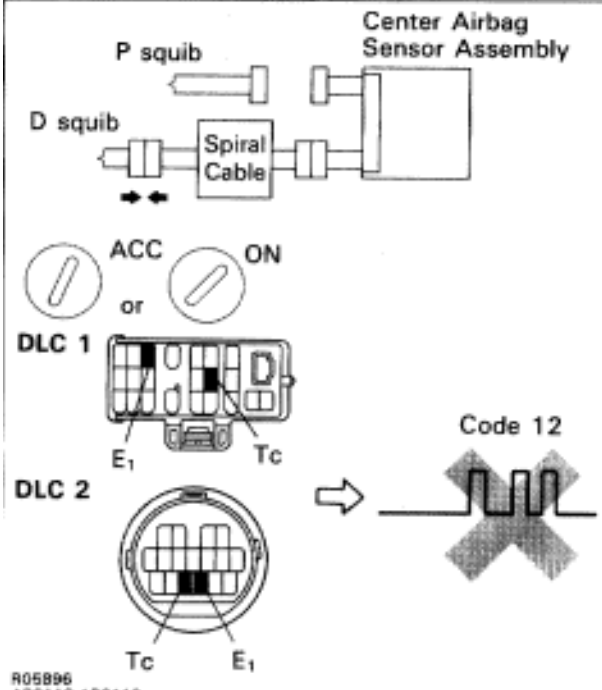

P
(1) Turn ignition switch to LOCK.
(2) Disconnect negative (–) terminal cable from the battery, and wait at least 90 seconds.
(3) Connect steering wheel pad connector.
(4) Connect negative (–) terminal cable to battery, and wait at least 2 seconds.

C
(1) Turn ignition switch to ACC or ON and wait at least 20 seconds.
(2) Clear malfunction code stored in memory. (See page RS–47)
(3) Turn ignition switch to LOCK, and wait at least 20 seconds.
(4) Turn ignition switch to ACC or ON, and wait at least 20 seconds.
(5) Using SST, connect terminals Tc and E_1 of DLC1 or DLC2.
SST 09843–18020
(6) Check diagnostic trouble code.

OK **Diagnostic trouble code 12 is not output.**

Hint Codes other than code 12 may be output at this time, but they are not relevant to this check.

OK → **NG** → **Replace steering wheel pad.**

8 Check D squib.

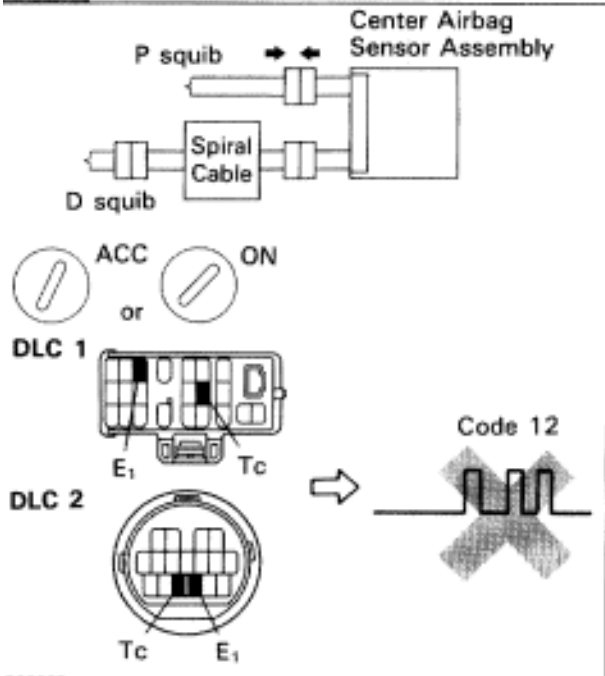

P
(1) Turn ignition switch to LOCK.
(2) Disconnect negative (–) terminal cable from the battery, and wait at least 90 seconds.
(3) Connect front passenger airbag assembly con–nectar.
(4) Connect negative (–) terminal cable to battery, and wait at least 2 seconds.

C
(1) Turn ignition switch to ACC or ON and wait at least 20 seconds.
(2) Clear malfunction code stored in memory. (See page RS–47)
(3) Turn ignition switch to LOCK, and wait at least 20 seconds.
(4) Turn ignition switch to ACC or ON, and wait at least 20 seconds.
(5) Using SST, connect terminals Tc and E_1 of DLC1 or DLC2.
SST 09843–18020
(6) Check diagnostic trouble code.

OK **Diagnostic trouble code 12 is not output.**

Hint Codes other than code 12 may be output at this time, but they are not relevant to this check.

OK → **NG** → **Replace front passenger airbag assembly.**

From the results of the above inspection, the malfunctioning part can now be considered normal. To make sure of this, use the simulation method to check.

9 Check spiral cable.

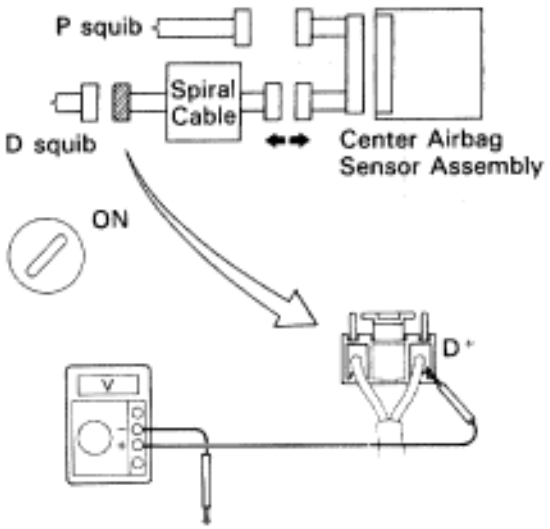

P
(1) Turn ignition switch to LOCK.
(2) Disconnect connector between center airbag sensor assembly and spiral cable.
(3) Turn ignition switch ON.

C
Measure voltage at D^+ on spiral cable side of connector between spiral cable and steering wheel pad.

OK
Voltage: 0 V

OK

NG → **Repair or replace spiral cable.**

Repair or replace harness or connector between center airbag sensor assembly and spiral cable.

DTC 13 Short in D Squib Circuit (Between D^+ Wire Harness and D^- Wire Harness)

CIRCUIT DESCRIPTION

The D squib circuit consists of the center airbag sensor assembly, spiral cable and steering wheel pad.
It causes the airbag to deploy when the airbag deployment conditions are satisfied.
For details of the function of each component, see FUNCTION OF COMPONENTS on page RS–4.
Diagnostic trouble code 13 is recorded when a short is detected in the D^+ wire harness and D^- wire harness of the squib circuit.

DTC No.	Diagnosis
13	• Short circuit between D^+ wire harness and D^- wire harness of squib. • D squib malfunction. • Spiral cable malfunction. • Center airbag sensor assembly malfunction.

WIRING DIAGRAM

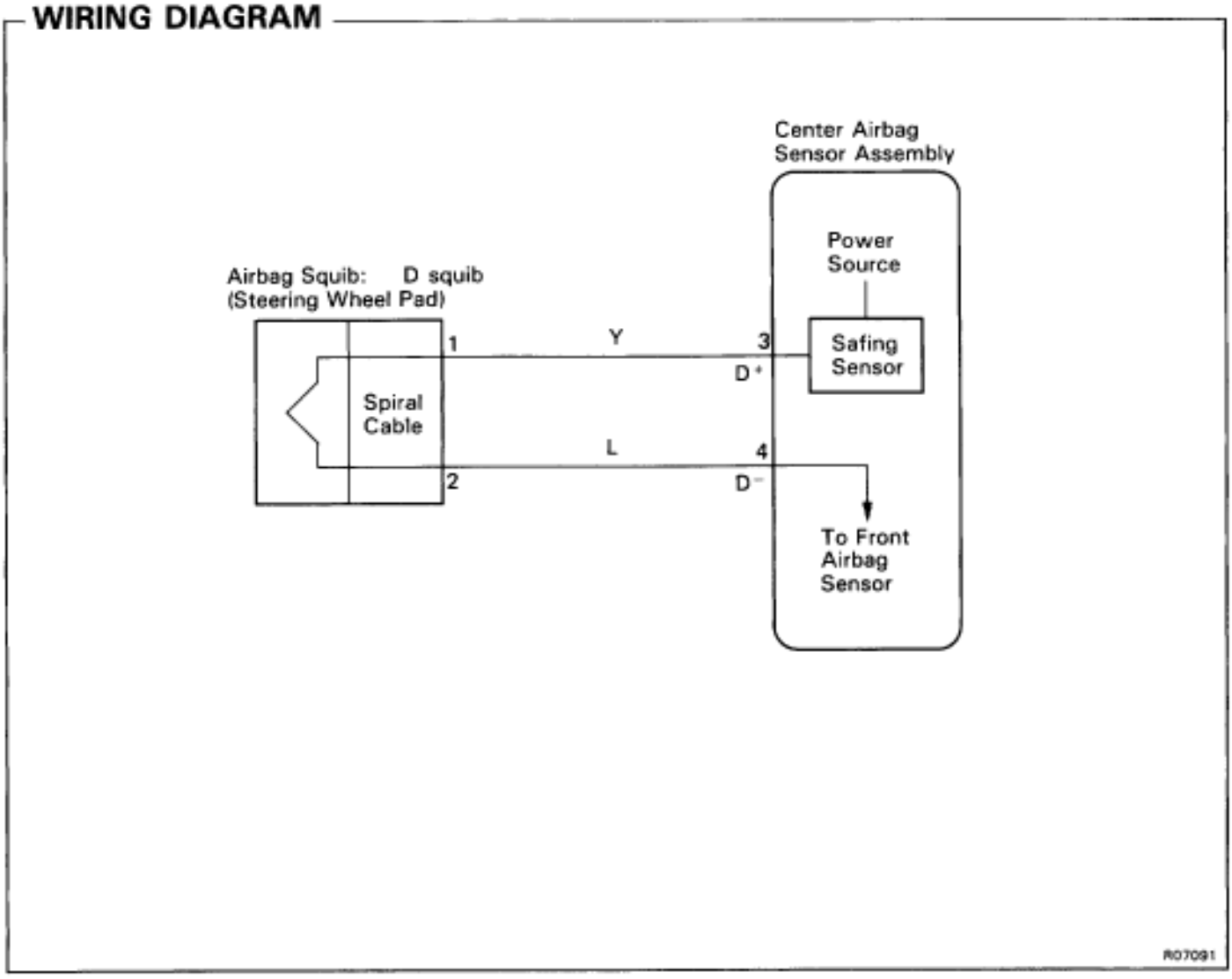

INSPECTION PROCEDURES

[P] Preparation **[C]** Check

1 Preparation.

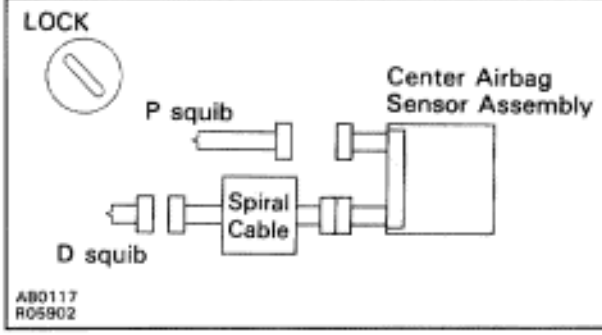

P

(1) Disconnect negative (–) terminal cable from the battery, and wait at least 90 seconds.
(2) Remove steering wheel pad (See page RS–10).
(3) Disconnect connector of front passenger airbag assembly (See page RS–20).

Caution

Store the steering wheel pad with the front surface facing upward.

2 Check D squib circuit.

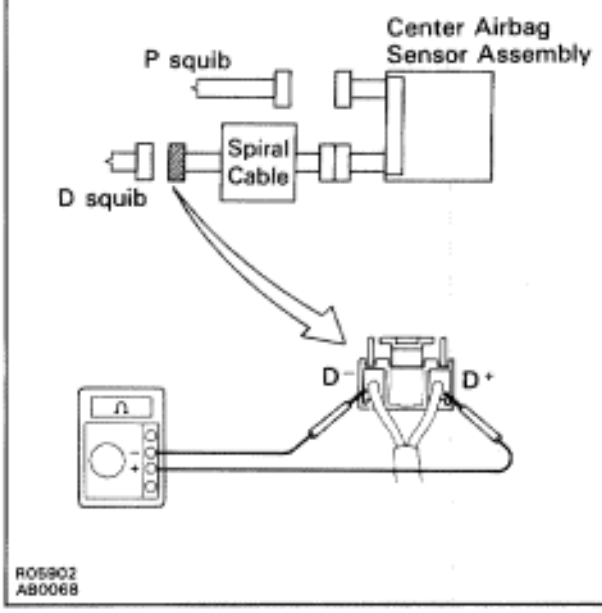

C For the connector (on the spiral cable side) between the spiral cable and steering wheel pad, measure the resistance between D^+ and D^-.

OK **Resistance: 1 k or higher.**

OK

NG Go to step 5.

3 Check center airbag sensor assembly.

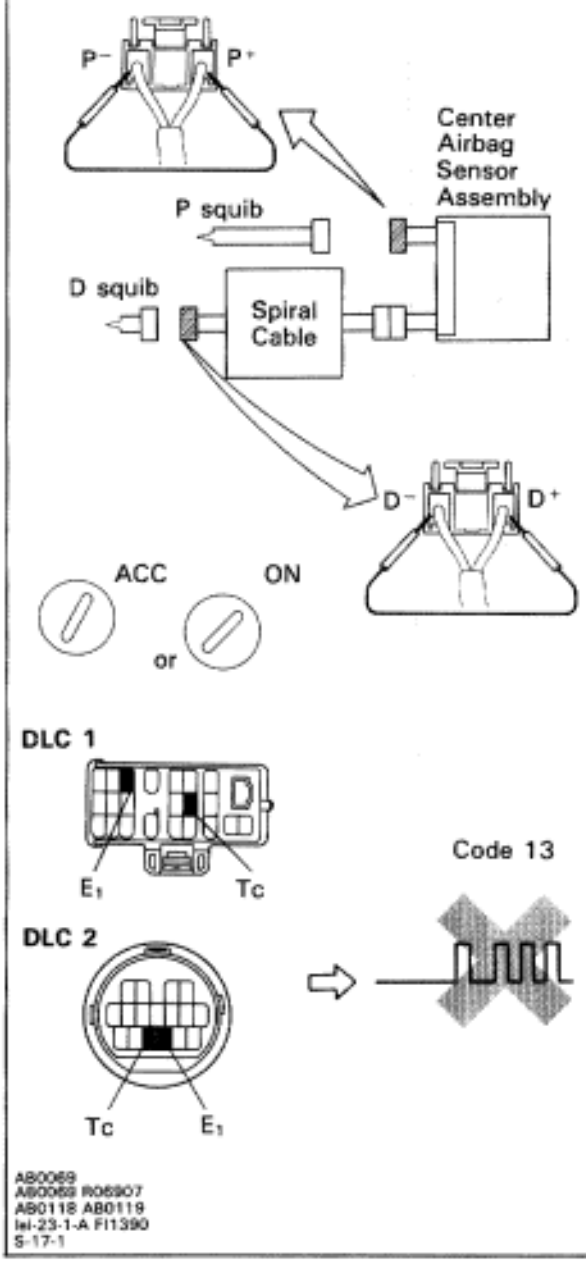

P (1) Using a service wire, connect D+ and D– on spiral cable side of connector between spiral cable and steering wheel pad.
(2) Using a service wire, connect P+ and P– on center airbag sensor assembly side of connector between center airbag sensor assembly and front passenger airbag assembly.
(3) Connect negative (–) terminal cable to battery, and wait at least 2 seconds.

C (1) Turn ignition switch to ACC or ON and wait at least 20 seconds.
(2) Clear malfunction code stored in memory. (See page RS–47)
(3) Turn ignition switch to LOCK, and wait at least 20 seconds.
(4) Remove the service wire which connects D^+ and D^- on spiral cable side of connector between spiral cable and steering wheel pad.
(5) Turn ignition switch to ACC or ON, and wait at least 20 seconds.
(6) Using SST, connect terminals Tc and E_1 of DLC1 or DLC2.
SST 09843–18020
(7) Check diagnostic trouble code.

OK **Diagnostic trouble code 13 is not output.**

Hint Codes other than code 13 may be output at this time, but they are not relevant to this check.

OK

NG **Replace center airbag sensor assembly.**

4 Check D squib.

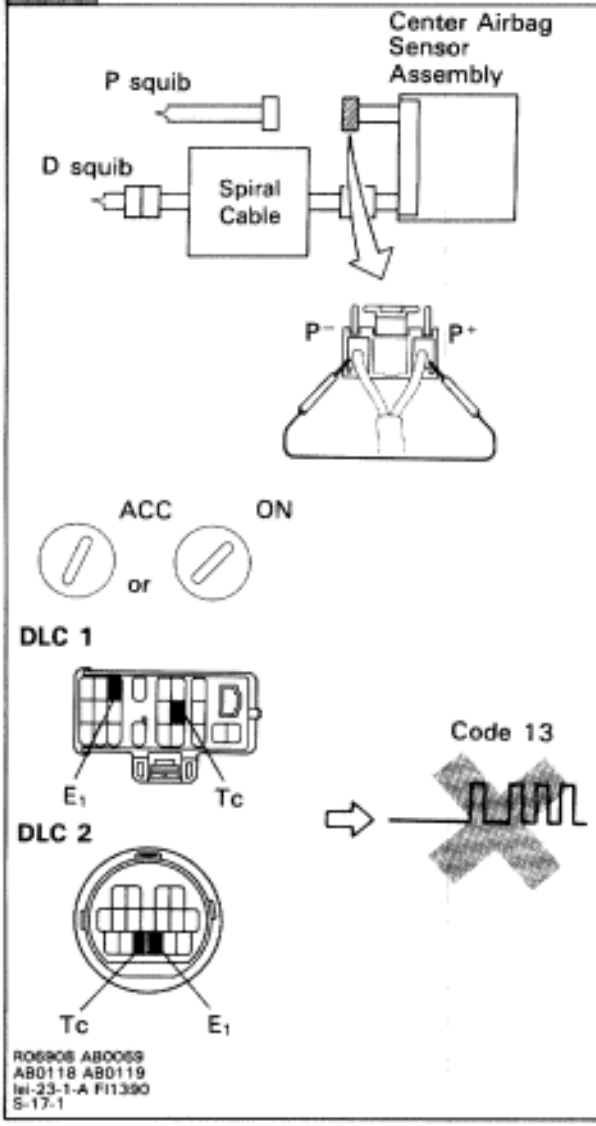

P

(1) Turn ignition switch to LOCK.
(2) Disconnect negative (–) terminal cable from the battery, and wait at least 90 seconds.
(3) Connect steering wheel pad connector.
(4) Using a service wire, connect P^+ and P^-.
(5) Connect negative (–) terminal cable to battery, and wait at least 2 seconds.

C

(1) Turn ignition switch to LOCK, and wait at least 20 seconds.
(2) Turn ignition switch to ACC or ON, and wait at least 20 seconds.
(3) Clear malfunction code stored in memory. (See page RS–47)
(4) Turn ignition switch to LOCK, and wait at least 20 seconds.
(5) Turn ignition switch to ACC or ON, and wait at least 20 seconds.
(6) Using SST, connect terminals Tc and E_1 of DLC1 or DLC2.
SST 09843–18020
(7) Check diagnostic trouble code.

OK **Diagnostic trouble code 13 is not output.**

Hint Codes other than code 13 may be output at this time, but they are not relevant to this check.

OK

NG **Replace steering wheel pad.**

From the results of the above inspection, the malfunctioning part can now be considered normal. To make sure of this, use the simulation method to check.

5 Check spiral cable.

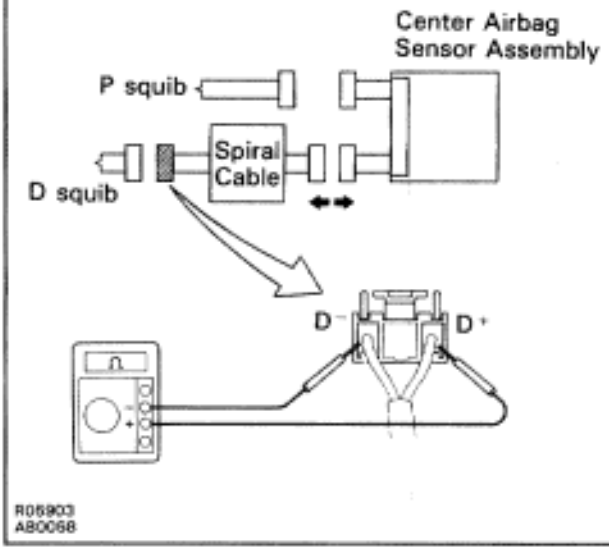

P (1) Disconnect connector between center airbag sensor assembly and spiral cable.
(2) Release airbag activation prevention mechanism on center airbag sensor assembly side of airbag squib connector (See page RS–72).

C For the connector (on the spiral cable side) between the spiral cable and steering wheel pad, measure the resistance between D^+ and D^-.

OK **Resistance: 1 M or higher**

OK

NG **Repair or replace spiral cable.**

6 Check harness between center airbag sensor assembly and spiral cable.

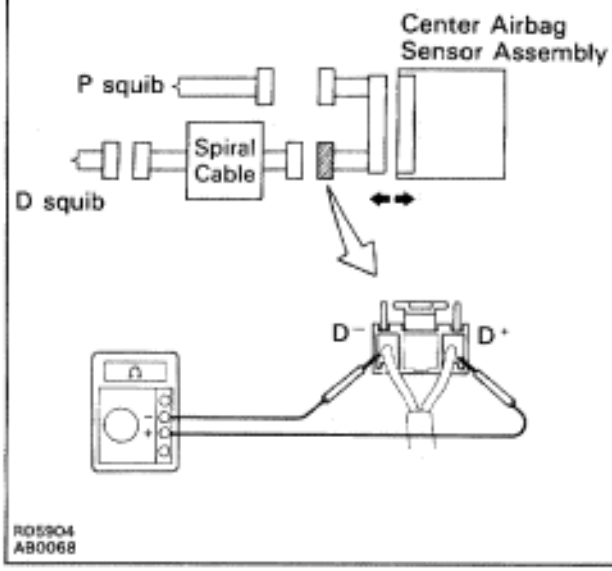

P (1) Disconnect center airbag sensor assembly connector.
(2) Release airbag activation prevention mechanism on center airbag sensor assembly connector. (See page RS–72)

C For connector (on the center airbag sensor assembly side) between the spiral cable and center airbag sensor assembly, measure the resistance between D^+ and D^-.

OK **Resistance: 1 M or higher.**

OK

NG **Repair or replace harness or connector between center airbag sensor assembly and spiral cable.**

7 Check center airbag sensor assembly.

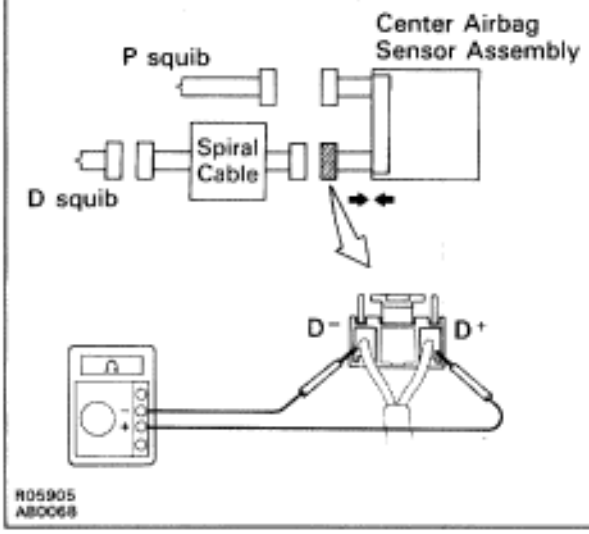

P Connector center airbag sensor assembly connector.

C For the connector (on the center airbag sensor assembly side) between the spiral cable and center airbag sensor assembly, measure he resistance between D^+ and D^-.

OK **Resistance: 1 k or higher**

OK

NG **Replace center airbag sensor assembly.**

From the results of the above inspection, the malfunctioning part can now be considered normal. To make sure of this, use the simulation method to check.

RELEASE METHOD OF AIRBAG ACTIVATION PREVENTION MECHANISM

An airbag activation prevention mechanism is built into the connector for the squib circuit of the SRS. When release of the airbag activation prevention mechanism is directed in the troubleshooting procedure, as shown in the illustration of the connector (1) and (2) below, insert paper which is the same thickness as the male terminal, between the terminal and the short spring.

CAUTION:

- **NEVER RELEASE the airbag activation prevention mechanism on the steering wheel pad connector and front passenger airbag assembly connector.**

NOTICE:

- **Do not release the airbag activation prevention mechanism unless specifically directed by the troubleshooting procedure.**
- **If the paper inserted is too thick the terminal and short spring may be damaged, so always use paper the same thickness as the male terminal.**

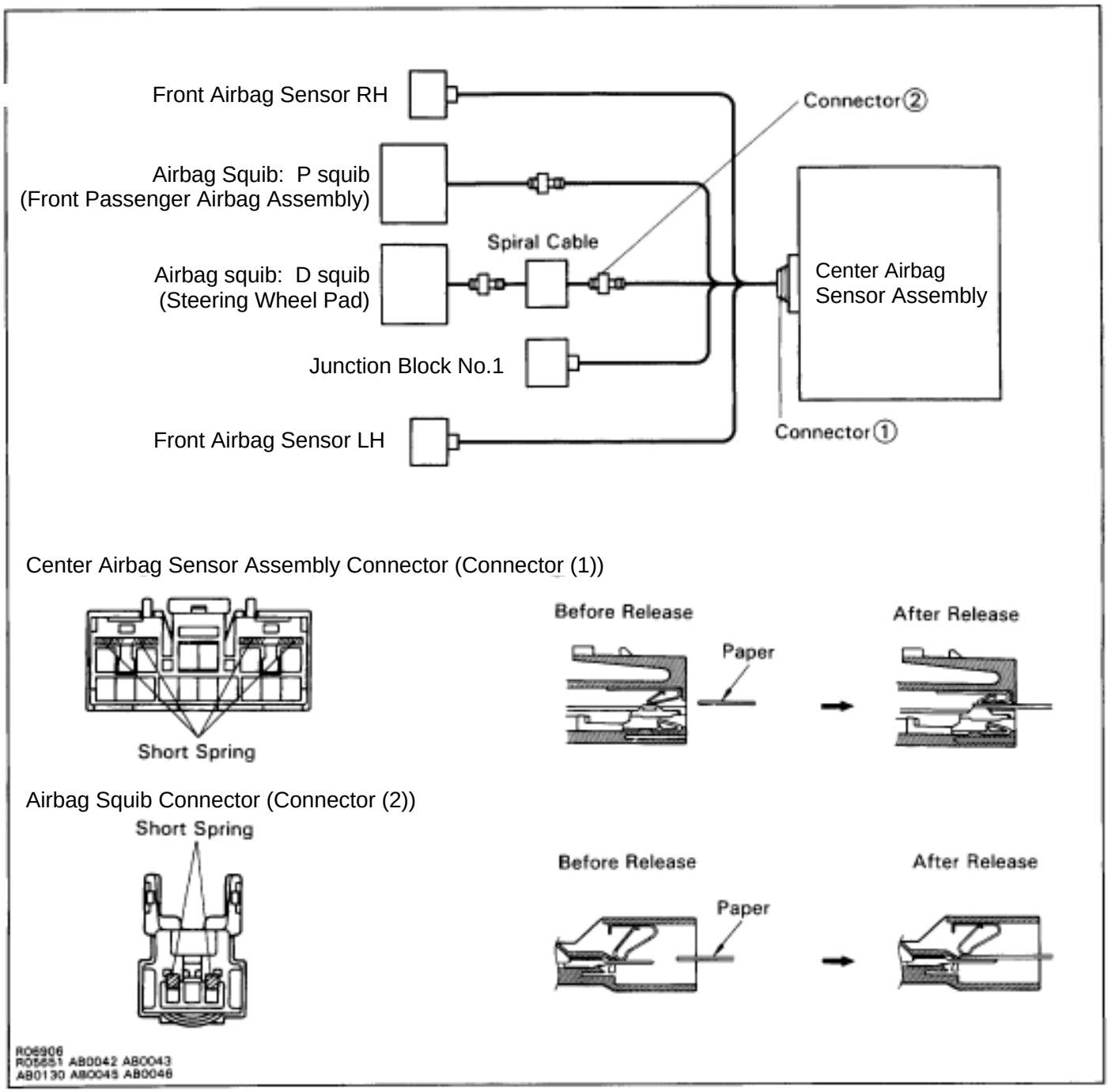

DTC 14 Open in D Squib Circuit

CIRCUIT DESCRIPTION

The D squib circuit consists of the center airbag sensor assembly, spiral cable and the steering wheel pad. It causes the airbag to deploy when the airbag deployment conditions are satisfied.
For details of the function of each component, see FUNCTION OF COMPONENTS on page RS–4. Diagnostic trouble code 14 is recorded when an open is detected in the squib circuit.

DTC No.	Diagnosis
14	• Open circuit in D^+ wire harness or D^- wire harness of squib. • D Squib malfunction. • Spiral cable malfunction. • Center airbag sensor assembly malfunction.

WIRING DIAGRAM

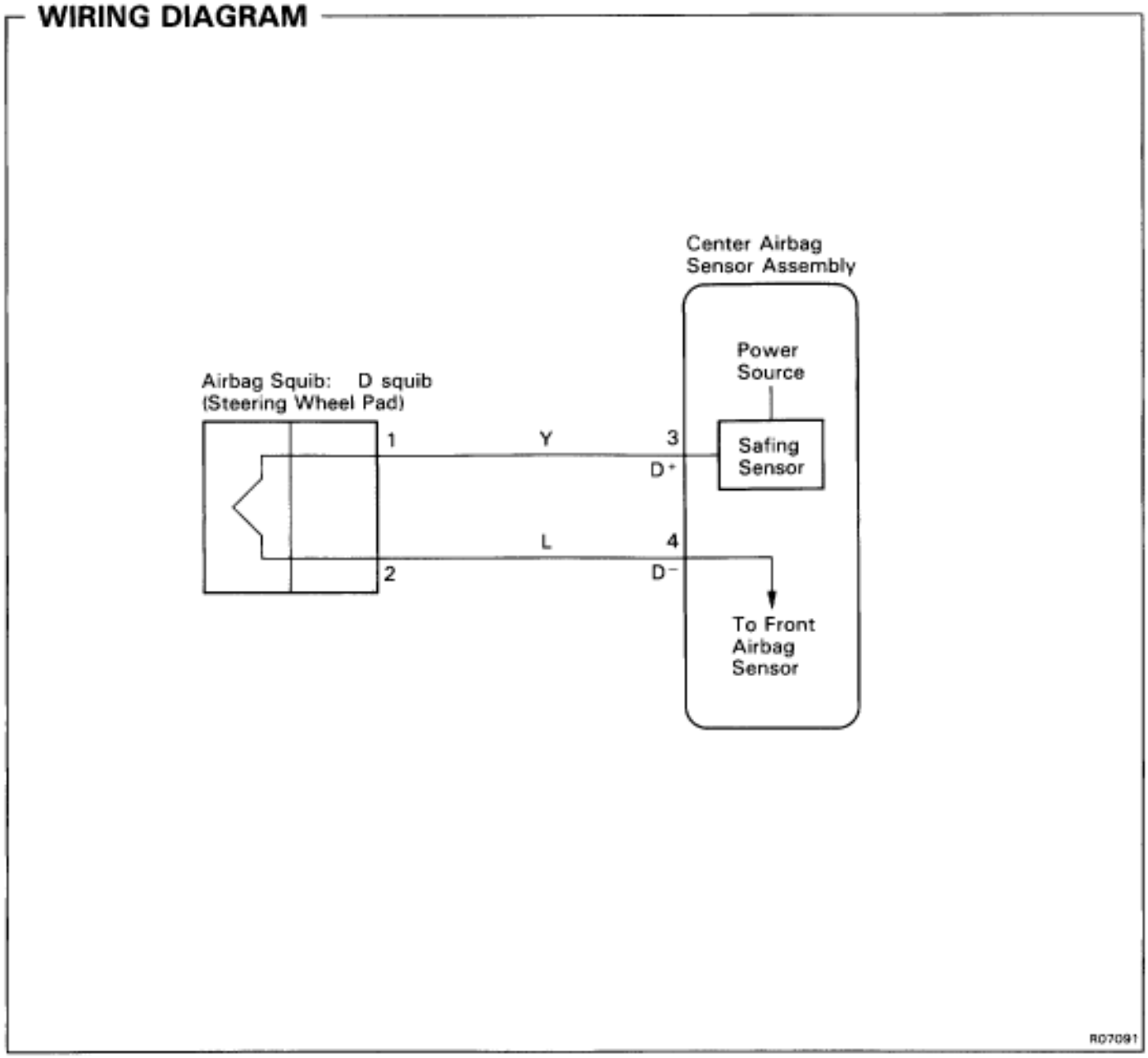

INSPECTION PROCEDURES

[P] Preparation **[C]** Check

1 Preparation.

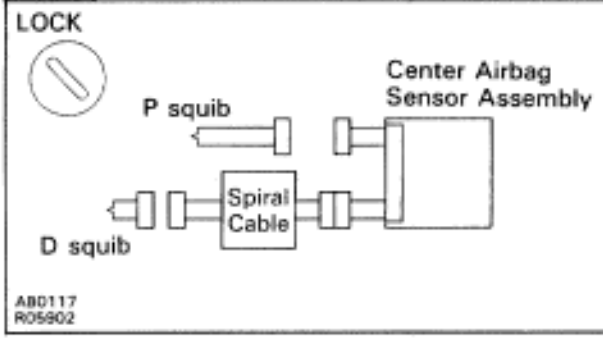

P (1) Disconnect negative (–) terminal cable from the battery, and wait at least 90 seconds.
(2) Remove steering wheel pad (See page RS–10).
(3) Disconnect connector of front passenger airbag assembly (See page RS–20).

Caution

Store the steering wheel pad with the front surface facing upward.

2 Check D squib circuit.

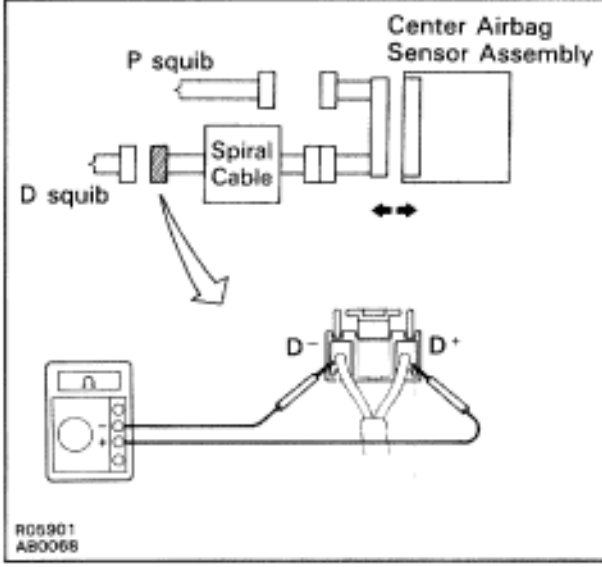

P Disconnect center airbag sensor assembly connector.

C For connector (on the spiral cable side) between the spiral cable and steering wheel pad, measure the resistance between D^+ and D^-.

OK **Resistance: Below 1**

NG

OK 〉 Go to step 5.

3 Check spiral cable.

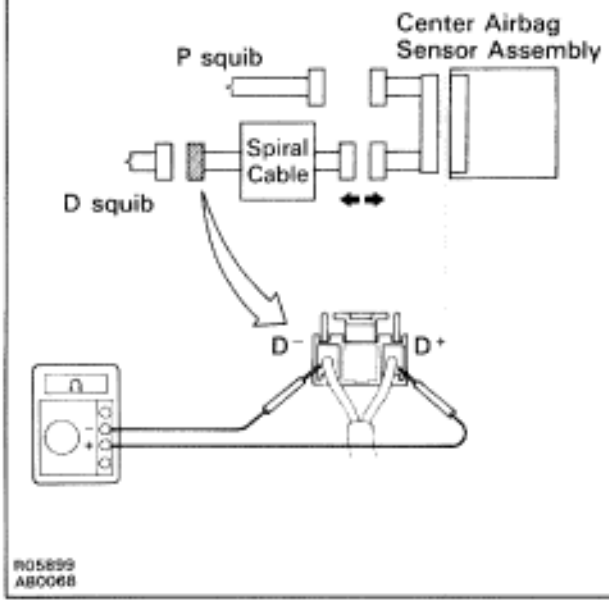

P Disconnect connector between center airbag sensor assembly and spiral cable.

C For connector (on the spiral cable side) between the spiral cable and steering wheel pad, measure the resistance between D^+ and D^-.

OK **Resistance: Below 1**

OK

NG **Repair or replace spiral cable.**

4 Check harness between center airbag sensor assembly and spiral cable.

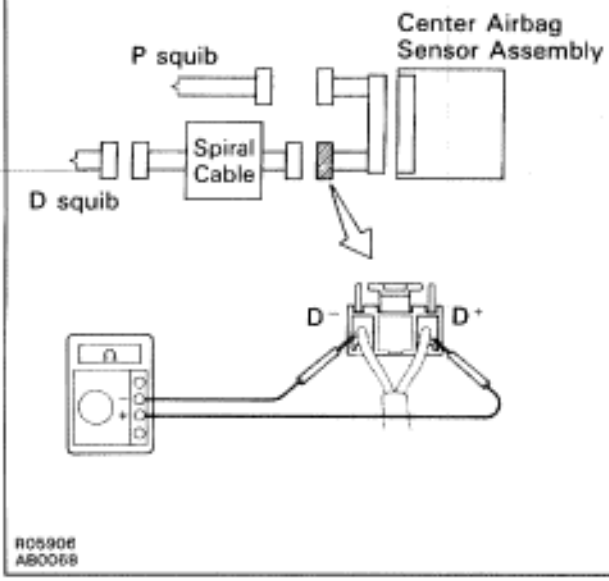

C For connector (on the center airbag sensor assembly side) between the center airbag sensor assembly and spiral cable, measure the resistance between D^+ and D^-.

OK **Resistance: Below 1**

OK

NG **Repair or replace harness or connector between center airbag sensor assembly and spiral cable.**

5 Check center airbag sensor assembly.

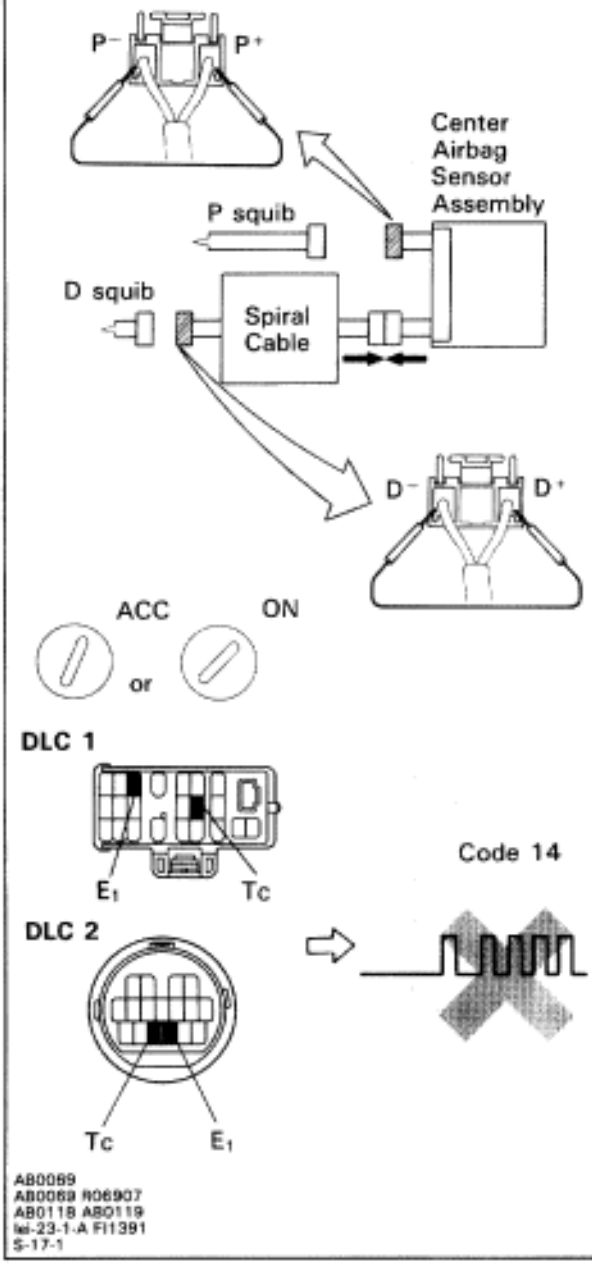

P

(1) Connect connector to center airbag sensor assembly.
(2) Connect connector between center airbag sensor assembly and spiral cable.
(3) Using a service wire, connect D^+ and D^- on spiral cable side of connector between spiral cable and steering wheel pad.
(4) Using a service wire, connect P^+ and P^- on center airbag sensor assembly side of connector between center airbag sensor assembly and front passen–ger airbag assembly.
(5) Connect negative (–) terminal cable to battery, and wait at least 2 seconds.

C

(1) Turn ignition switch to ACC or ON and wait at least 20 seconds.
(2) Clear malfunction code stored in memory. (See page RS–47)
(3) Turn ignition switch to LOCK, and wait at least 20 seconds.
(4) Turn ignition switch to ACC or ON, and wait at least 20 seconds.
(5) Using SST, connect terminals Tc and E_1 of DLC1 and DLC2.
SST 09843–18020
(6) Check diagnostic trouble code.

OK **Diagnostic trouble code 14 is not output.**

Hint Codes other than code 14 may be output at this time, but they are not relevant to this check.

OK

NG **Replace center airbag sensor assembly.**

6 Check D squib.

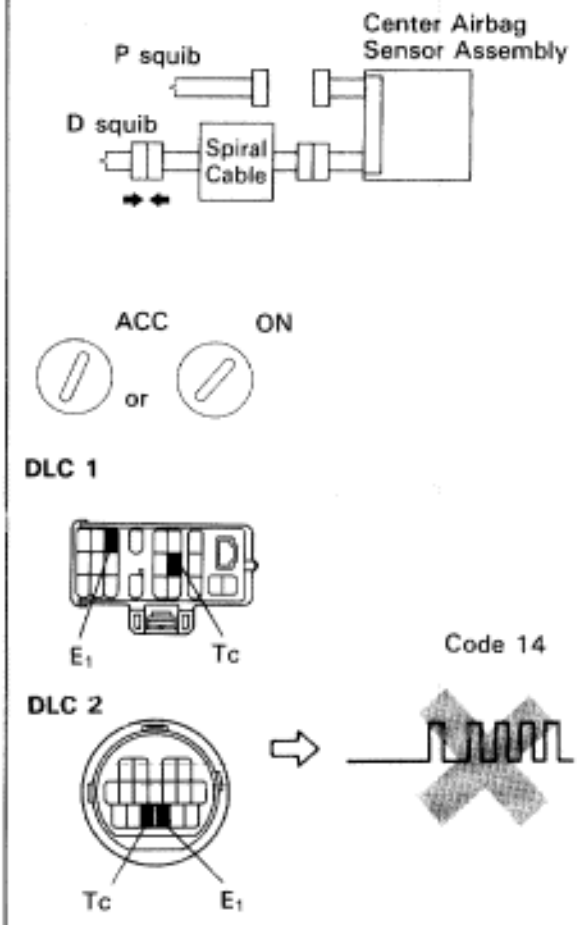

P
(1) Turn ignition switch to LOCK.
(2) Disconnect negative (–) terminal cable from the battery, and wait at least 90 seconds.
(3) Connect steering wheel pad connector.
(4) Connect negative (–) terminal cable to battery, and wait at least 2 seconds.

C
(1) Turn ignition switch to ACC or ON and wait at least 20 seconds.
(2) Clear malfunction code stored in memory. (See page RS–47)
(3) Turn ignition switch to LOCK, and wait at least 20 seconds.
(4) Turn ignition switch to ACC or ON, and wait at least 20 seconds.
(5) Using SST, connect terminals Tc and E_1 of DLC1 and DLC2.
SST 09843–18020
(6) Check diagnostic trouble code.

OK **Diagnostic trouble code 14 is not output.**

Hint Codes other than code 14 may be output at this time, but they are not relevant to this check.

OK

NG **Replace steering wheel pad.**

From the results of the above inspection, the malfunctioning part can now be considered normal. To make sure of this, use the simulation method to check.

DTC 15 Open in Front Airbag Sensor Circuit

CIRCUIT DESCRIPTION

The front airbag sensor detects the deceleration force in a frontal collision and is located in the front fender on the left and right sides.
For details of the function of each component, see FUNCTION OF COMPONENTS on page RS–4. Diagnostic trouble code 15 is recorded when an open is detected in the front airbag sensor circuit.
NOTICE: The front airbag sensor connector is equipped with an electrical connection check mechanism for the purpose of detecting an open in the front airbag sensor (See page RS–36). This mechanism is constructed so that when the terminals of the front airbag sensor have been connected (when the connector housing lock is in the locked condition), the connection detection pin on the wire harness side connects with the terminals for diagnosis use on the sensor side. If the connector is not properly connected, the diagnostic system may detect only a malfunction code, even though the SRS is functioning normally.
When connecting the front airbag sensor connector, make sure it is connected properly. If diagnostic trouble code 15 is displayed after the front airbag sensor connector has been connected, check again that it is properly connected.

DTC No.	Diagnosis
15	• Open circuit in + S wire harness or – S wire harness of front airbag sensor. • Front airbag sensor malfunction. • Malfunction of electrical connection check mechanism of front airbag sensor. • Center airbag sensor assembly malfunction.

WIRING DIAGRAM

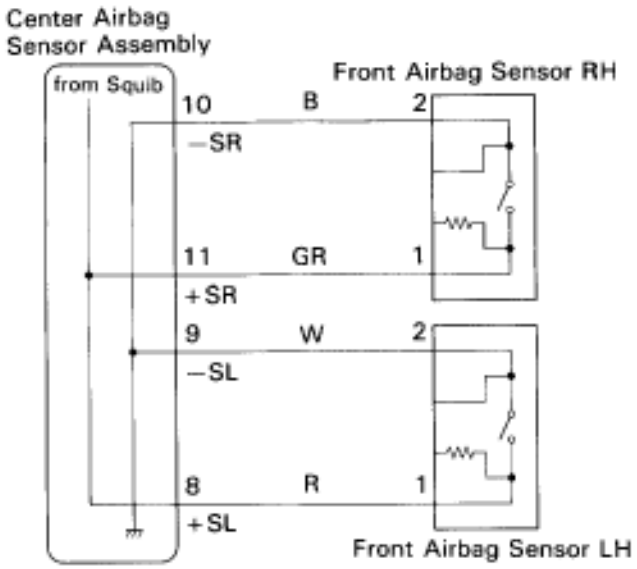

RO7082

INSPECTION PROCEDURES

[P] Preparation **[C]** Check

1 Preparation.

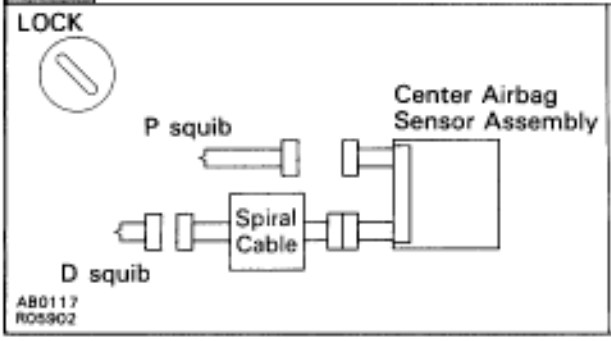

P (1) Disconnect negative (–) terminal cable from the battery, and wait at least 20 seconds.
(2) Remove steering wheel pad (See page RS–10).
(3) Disconnect connector of front passenger airbag assembly (See RS20).

Caution

Store the steering wheel pad with the front surface facing upward.

2 Check front airbag sensor circuit (Measure resistance between terminals +SR and –SR, +SL and –SL of center airbag sensor assembly connector.).

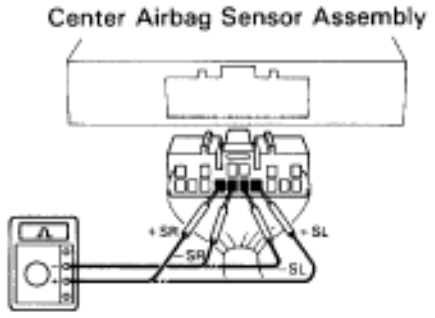

P Disconnect center airbag sensor assembly connector.

C Measure resistance between terminals +SR and –SR, +SL and –SL of harness side connector of center airbag sensor assembly.

OK **Resistance: 755 — 885**

OK

NG Go to step 4.

3 Check center airbag sensor assembly.

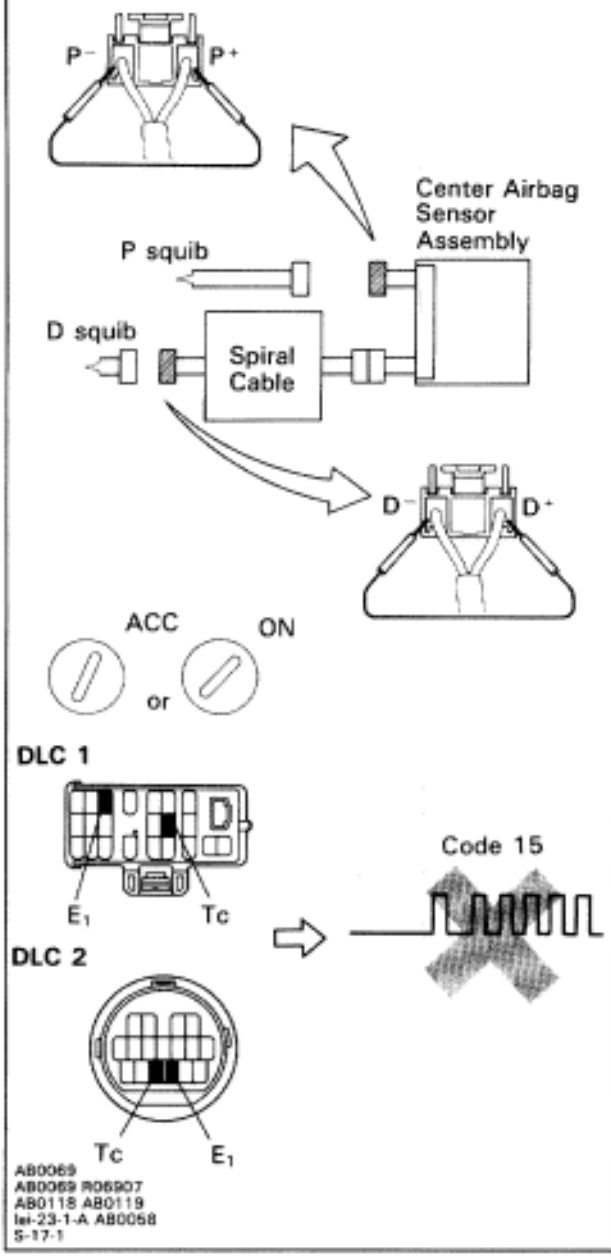

P

(1) Connect connector to center airbag sensor assembly.
(2) Using a service wire, connect D^+ and D^- on spiral cable side of connector between spiral cable and steering wheel pad.
(3) Using a service wire, connect P^+ and P^- on center airbag sensor assembly side of connector between center airbag sensor assembly and front passenger airbag assembly.
(4) Connect negative (–) terminal cable to battery, and wait at least 2 seconds.

C

(1) Turn ignition switch to ACC or ON and wait at least 20 seconds.
(2) Clear malfunction code stored in memory. (See page RS–47)
(3) Turn ignition switch to LOCK, and wait at least 20 seconds.
(4) Turn ignition switch to ACC or ON, and wait at least 20 seconds.
(5) Using SST, connect terminals Tc and E_1 of DLC1 and DLC2.
SST 09843–18020
(6) Check diagnostic trouble code.

OK **Diagnostic trouble code 15 is not output.**

Hint Codes other than code 15 may be output at this time, but they are not relevant to this check.

OK

NG **Replace center airbag sensor assembly.**

From the results of the above inspection, the malfunctioning part can now be considered normal. To make sure of this, use the simulation method to check.

4 Check front airbag sensor.

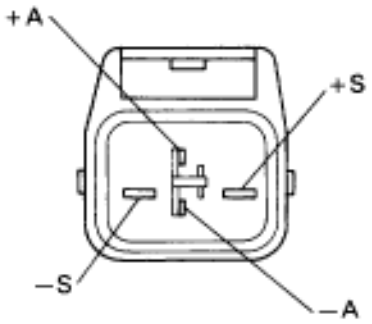

AB0034

P Disconnect front airbag sensor connector.

C Measure resistance between each terminal of front airbag sensor.

OK

Terminal	Resistance
⊕ S – ⊕ A	755 Ω – 885 Ω
⊕ S – ⊖ S	1 MΩ or Higher
⊖ S – ⊖ A	less than 1 Ω

Notice

- **Do not press ohmmeter probes too strongly against terminals of front airbag sensor.**
- **Make sure the front airbag sensor connector is properly connected.**

OK

NG **Replace front airbag sensor.**

5 Check harness between center airbag sensor assembly and front airbag sensor.

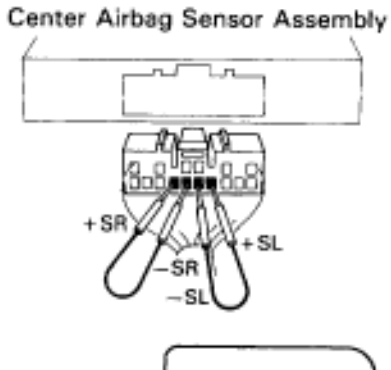

R05297
AB0039

P (1) Disconnect center airbag sensor assembly connector.
(2) Using service wires, connect +SR and –SR, +SL and –SL on the wire harness side of the center airbag sensor assembly connectors.

C Measure resistance between terminals –SR and –SR, +SL and –SL of harness side connector of front airbag sensor.

OK **Resistance: Less than 1**

Notice

- **Lightly touch ohmmeter probes at position shown in illustration.**
- **Make sure the front airbag sensor connector is properly connected.**

OK

NG **Repair or replace harness or connector between center airbag sensor assembly and front airbag sensor (See page RS–36).**

Replace front airbag sensor connector. (See page RS–36)

DTC 22 SRS Warning Light System Malfunction

CIRCUIT DESCRIPTION

The SRS warning light is located on the cluster finish panel.
When the SRS is normal, the SRS warning light lights up for approx. 6 seconds after the ignition switch is turned from LOCK position to ACC or ON position, and then turns off automatically.
If there is a malfunction in the SRS, the SRS warning light lights up to inform the driver of the abnormality. When terminals Tc and E_1 of the DLC1 or DLC2 are connected, the diagnostic trouble code is displayed by the blinking of the SRS warning light.
The SRS warning light circuit is equipped with an electrical connection check mechanism which detects when the connector to the center airbag sensor assembly is not properly connected.
If the connector to the center airbag sensor assembly is not properly connected, the SRS warning light will not light up.
Diagnostic trouble code 22 is recorded when a malfunction occurs in the SRS warning light system. If an OPEN malfunction occurs in the SRS warning light system, the SRS warning light does not light up, so that until the malfunction is repaired, the diagnostic trouble codes (including code 22) cannot be confirmed.

DTC No.	Diagnosis
22	• Open circuit in SRS warning light system. • Center airbag sensor assembly malfunction.

WIRING DIAGRAM

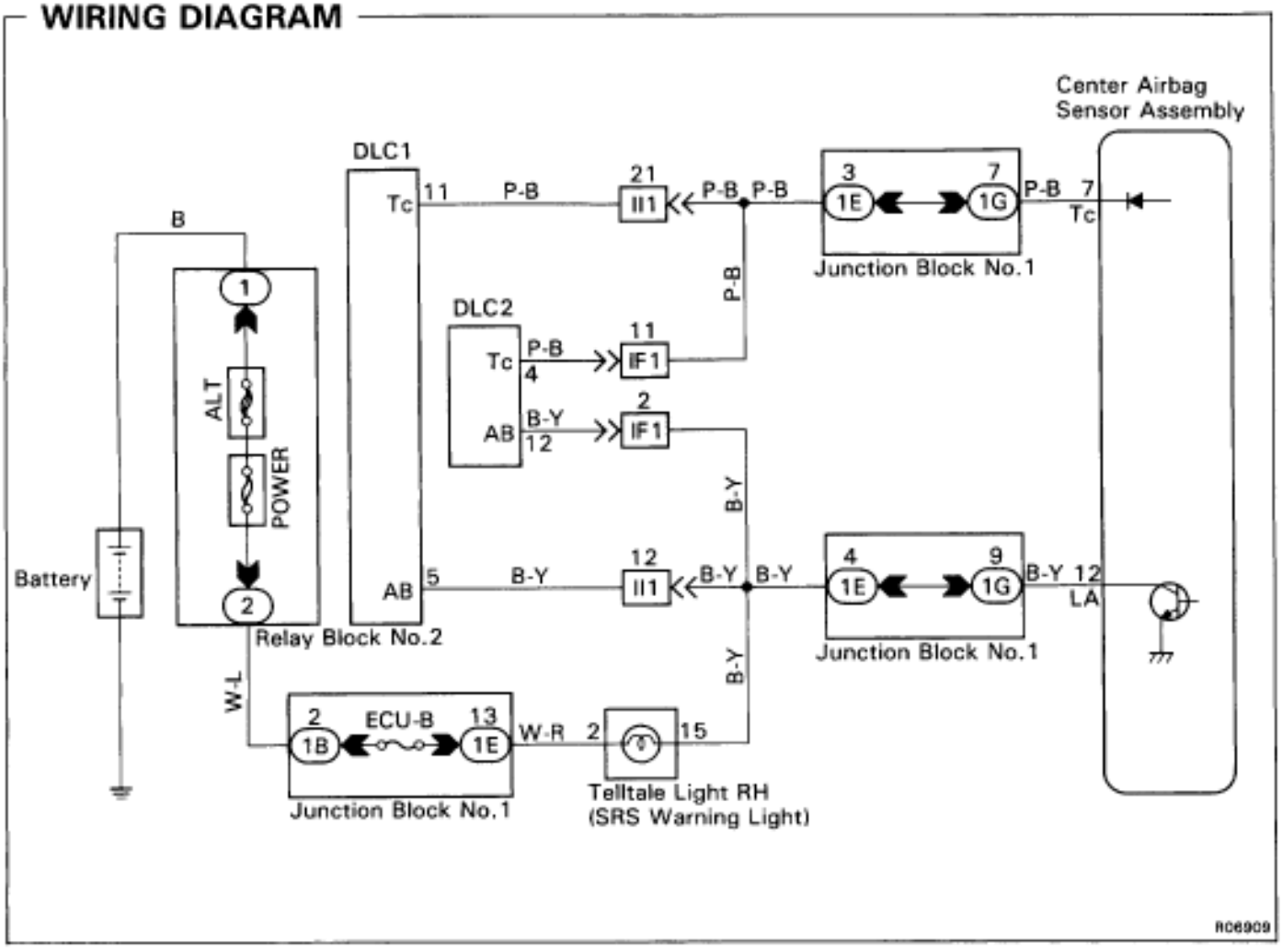

INSPECTION PROCEDURES

[P] Preparation **[C]** Check

HINT: If SRS warning light does not light up, perform the following troubleshooting:

1 Check ECU–B Fuse.

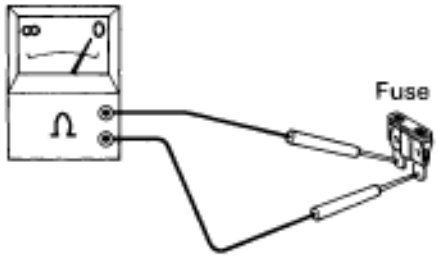

P Remove ECU–B fuse.

C Check continuity of ECU–B fuse.

OK **Continuity**

Hint
- Fuse may be burnt out even if it appears to be OK during visual inspection.
- If fuse is OK, install it.

OK

NG Go to step **6**.

2 Check connection of center airbag sensor assembly connector.

OK

NG **Repair.**

3 Preparation.

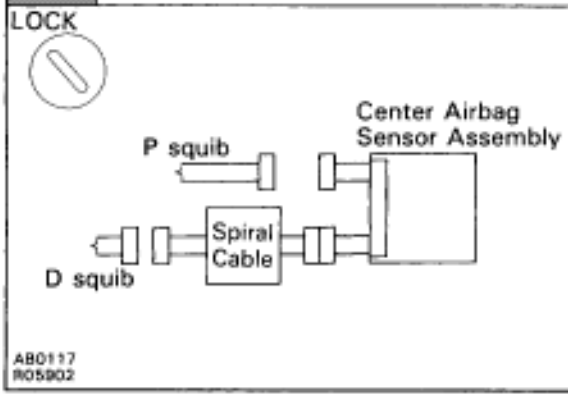

P (1) Disconnect negative (–) terminal cable from the battery, and wait at least 90 seconds.
(2) Remove steering wheel pad (See page RS–10).
(3) Disconnect connector of front passenger airbag assembly (See page RS–20).

Caution

Store the steering wheel pad with the front surface facing upward.

4 Check SRS warning light circuit.

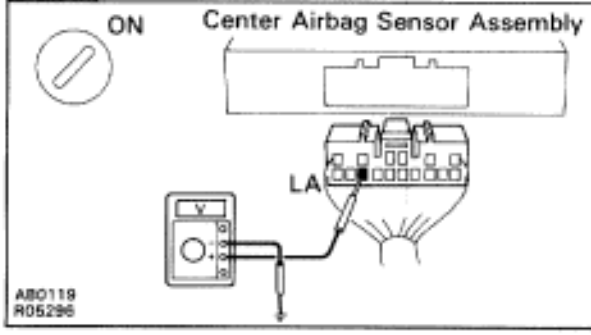

P (1) Disconnect center airbag sensor assembly connector.
(2) Connect negative (–) terminal cable to battery.
(3) Turn ignition switch to ACC or ON.

C Measure voltage LA terminal of harness side connector of center airbag sensor assembly.

OK **Voltage: Battery positive voltage**

OK

NG **Repair SRS warning light circuit.**

5 Does SRS warning light come on?

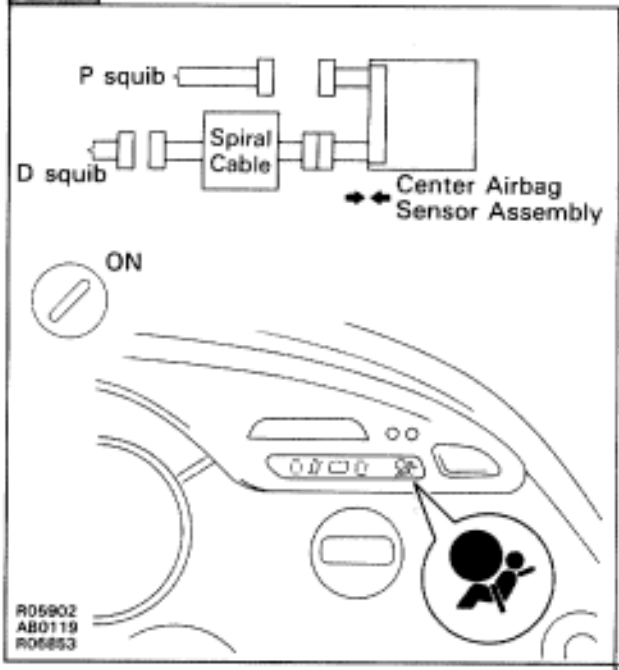

P (1) Disconnect negative (–) terminal cable from the battery.
(2) Connect center airbag sensor assembly connector.
(3) Connect negative (–) terminal cable to battery, and wait at least 2 seconds.
(4) Turn ignition switch to ACC or ON

C Check operation of SRS warning light.

OK **SRS warning light comes on.**

YES

NO **Check terminal LA of center airbag sensor assembly and electrical connection check mechanism. If normal, replace center airbag sensor assembly.**

From the results of the above inspection, the malfunctioning part can now be considered normal. To make sure of this, use the simulation method to check.

6 Is new ECU–B fuse burnt out again?

YES

NO **Using simulation method, reproduce malfunction symptoms (See page RS–48).**

Check harness between ECU–B fuse and SRS warning light.

HINT: If diagnostic trouble code 22 is output, do the following troubleshooting:

1 Is diagnostic trouble code 22 output again?

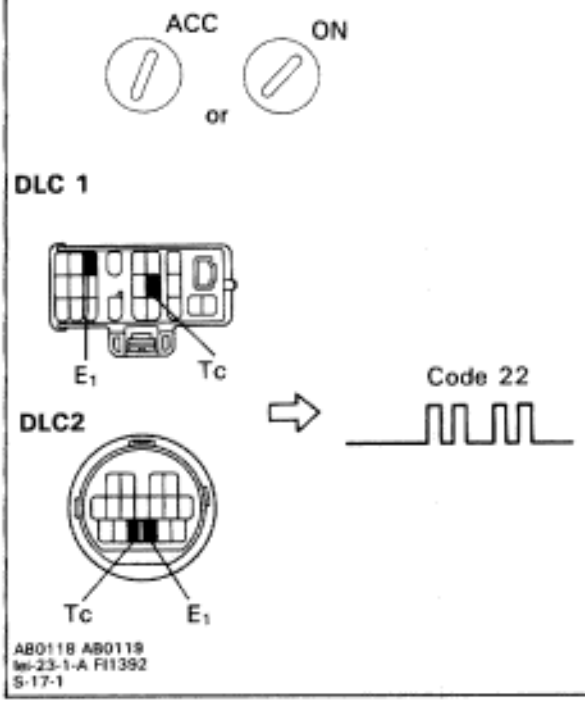

C

(1) Turn ignition switch to LOCK, and wait at least 2 seconds.
(2) Turn ignition switch to ACC or ON, and wait at least 20 seconds.
(3) Clear malfunction code stored in memory. (See page RS–47)
(4) Turn ignition switch to LOCK, and wait at least 20 seconds.
(5) Turn ignition switch to ACC or ON, and wait at least 20 seconds.
(6) Using SST, connect terminals Tc and E1 of DLC1 or DLC2.
SST 09843–18020
(7) Check diagnostic trouble code.

YES

Replace center airbag sensor assembly.

NO

Using simulation method, reproduce malfunction symptoms (See page RS–48).

DTC 31 Center Airbag Sensor Assembly Malfunction

CIRCUIT DESCRIPTION

The center airbag sensor assembly consists of a center airbag sensor, safing sensor, drive circuit, diagnosis circuit and ignition control, etc.
It receives signals from the airbag sensors, judges whether or not the SRS must be deployed, and diagnostic system malfunction.
Diagnostic trouble code 31 is recorded when a occurrence of a malfunction in the center airbag sensor assembly is detected.

DTC No.	Diagnosis
31	• Center airbag sensor assembly malfunction.

INSPECTION PROCEDURES

HINT: When a malfunction code other than code 31 is displayed at the same time, first repair the malfunction indicated by the malfunction code other than code 31.

[P] Preparation **[C]** Check

1 Is diagnostic trouble code 31 output again?

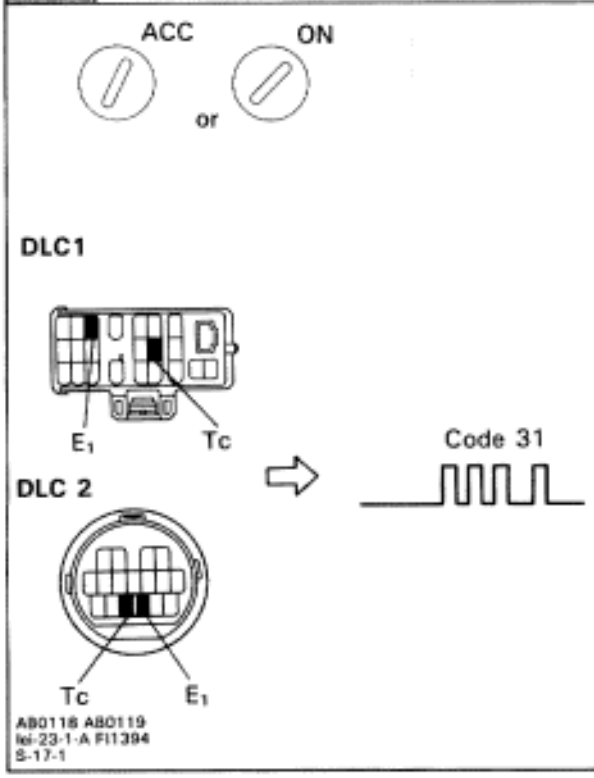

P Clear malfunction code (See page RS–47).

C
(1) Turn ignition switch to LOCK, and wait at least 20 seconds.
(2) Turn ignition switch to ACC or ON, and wait at least 20 seconds.
(3) Repeat step (1) and (2) at least 5 times.
(4) Using SST, connect terminals TC and E_1 of DLC1 or DLC2.
SST 09843–18020
(7) Check diagnostic trouble code.

YES

Replace center airbag sensor assembly.

NO **Using simulation method, reproduce malfunction symptoms (See page RS–48).**

DTC 53 Short in P Squib Circuit (Between P^+ Wire Harness and P^- Wire Harness)

CIRCUIT DESCRIPTION

The P squib circuit consists of the center airbag sensor assembly and front passenger airbag assembly. It causes the airbag to deploy when the airbag deployment conditions are satisfied.
For details of the function of each component see FUNCTION OF COMPONENTS on page RS–4. Diagnostic trouble code 53 is recorded when a short is detected in the P^+ wire harness and P^- wire harness of the squib circuit.

DTC No.	Diagnosis
53	• Short circuit between P^+ wire harness P^- wire harness of squib. • P squib malfunction. • Center airbag sensor assembly malfunction.

WIRING DIAGRAM

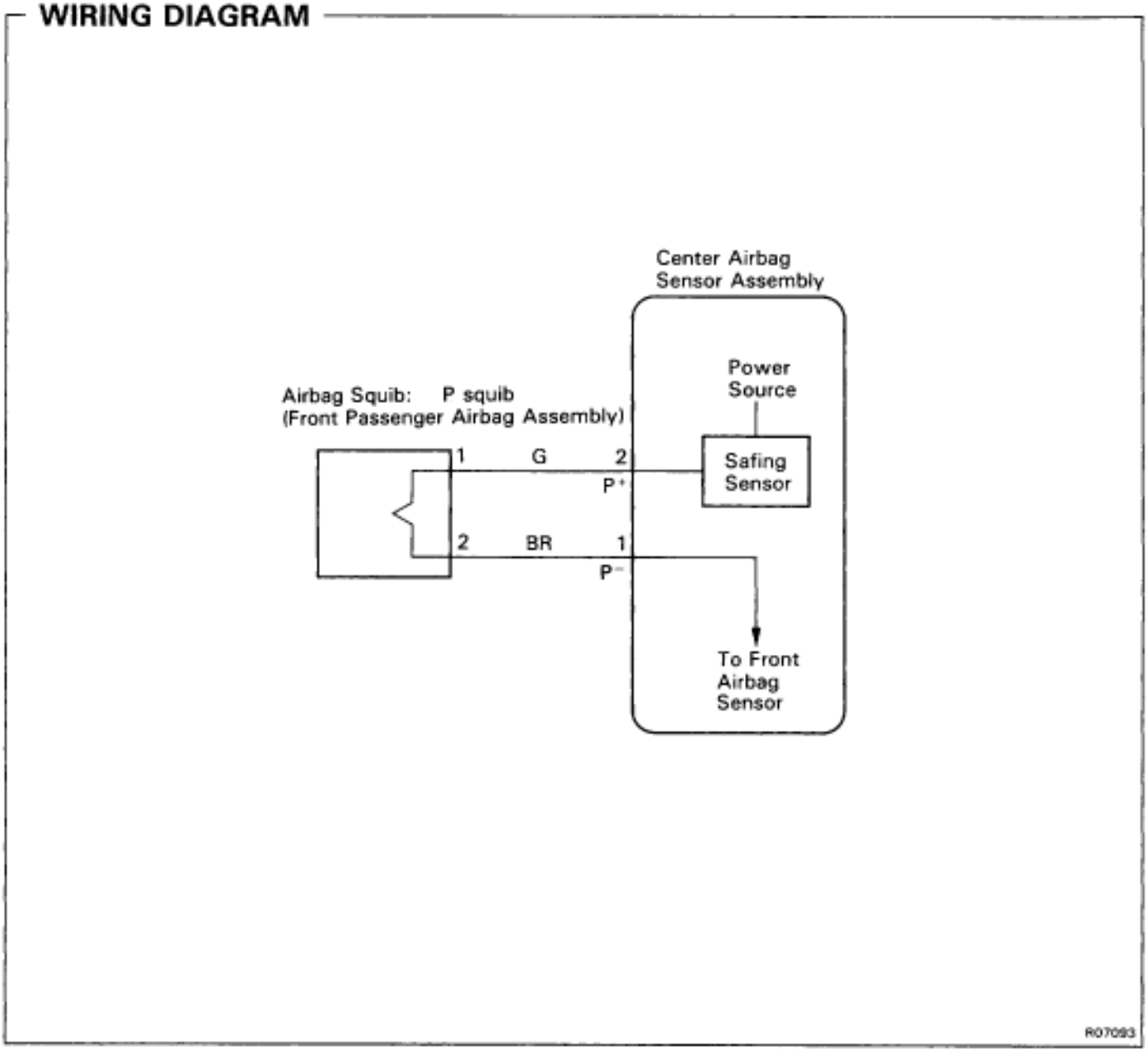

INSPECTION PROCEDURES

[P] Preparation **[C]** Check

1 Preparation.

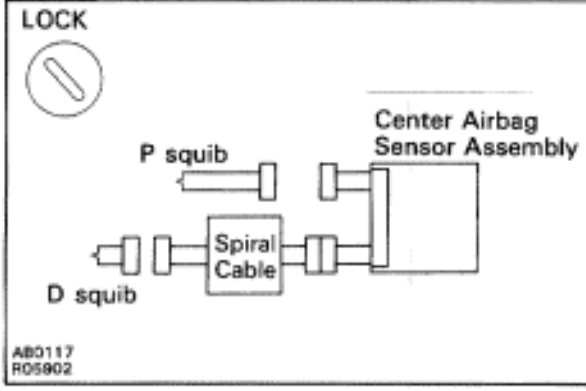

P (1) Disconnect negative (–) terminal cable from the battery, and wait at least 90 seconds.
(2) Remove steering wheel pad (See page RS–10).
(3) Disconnect connector of front passenger airbag assembly (See page RS–20).

Caution

Store the steering wheel pad with the front surface facing upward.

2 Check P squib circuit.

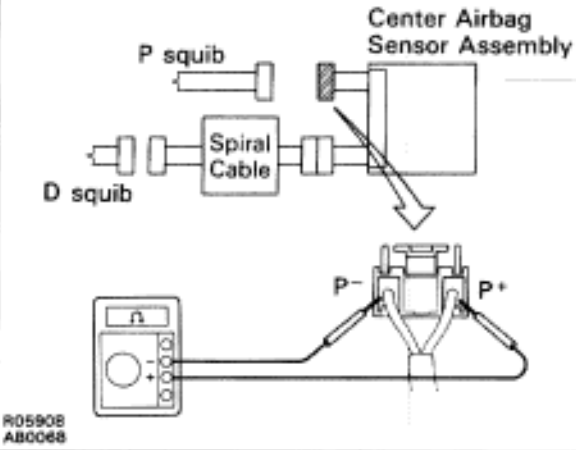

C For the connector (on the center airbag sensor assembly side) between the center airbag sensor assembly and front passenger airbag assembly, measure the resistance between P^+ and P^-.

OK **Resistance: 1 k or higher**

OK

NG Go to step 5.

3 Check center airbag sensor assembly.

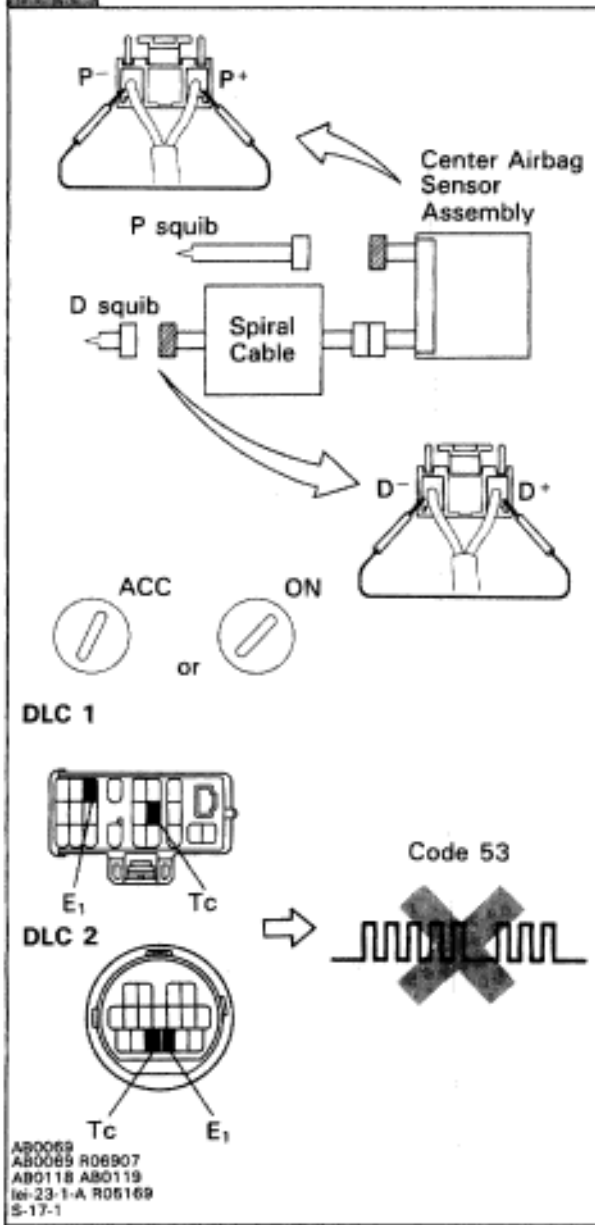

P

(1) Using a service wire, connect D^+ and D^- on spiral cable side of connector between spiral cable and steering wheel pad.
(2) Using a service wire, connect P^+ and P^- on center airbag sensor assembly side of connector between center airbag sensor assembly and front passenger airbag assembly.
(3) Connect negative (–) terminal cable to battery, and wait at least 2 seconds.

C

(1) Turn ignition switch to LOCK, and wait at least 2 seconds.
(2) Turn ignition switch to ACC or ON, wait at least 20 seconds.
(3) Clear malfunction code stored in memory. (See page RS–47)
(4) Turn ignition switch to LOCK, and wait at least 20 seconds.
(5) Remove the service wire which connect P^+ and P^- on center airbag assembly side of connector between center airbag sensor assembly and front passenger airbag assembly.
(6) Using SST, connect terminals Tc and E_1 of DLC1 or DLC2.
SST 09843–18020
(7) Check diagnostic trouble code.

OK **Diagnostic trouble code 53 is not output.**

Hint Codes other than code 53 may be output at this time, but they are not relevant to this check.

OK

NG **Replace center airbag sensor assembly.**

4 Check P squib.

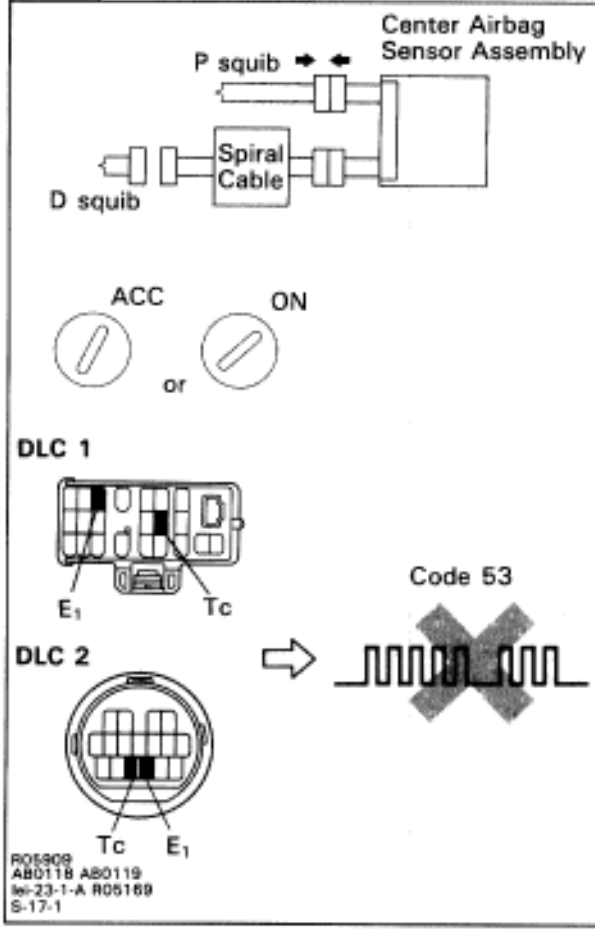

P

(1) Turn ignition switch to LOCK.
(2) Disconnect negative (–) terminal cable from the battery, and wait at least 90 seconds.
(3) Connect front passenger airbag assembly connector.
(4) Connect negative (–) terminal cable to battery, and wait at least 2 seconds.

C

(1) Turn ignition switch to LOCK, and wait at least 2 seconds.
(2) Turn ignition switch to ACC or ON, wait at least 20 seconds.
(3) Clear malfunction code stored in memory. (See page RS–47)
(4) Turn ignition switch to LOCK, and wait at least 20 seconds.
(5) Turn ignition switch to ACC or ON, and wait at least 20 seconds.
(6) Using SST, connect terminals Tc and E_1 of DLC1 or DLC2.
SST 09843–18020
(7) Check diagnostic trouble code.

OK **Diagnostic trouble code 53 is not output.**

Hint Codes other than code 53 may be output at this time, but they are not relevant to this check.

OK

NG **Replace front passenger airbag assembly.**

From the results of the above inspection, the malfunctioning part can now be considered normal. To make sure of this, use the simulation method to check.

5 Check P squib circuit.

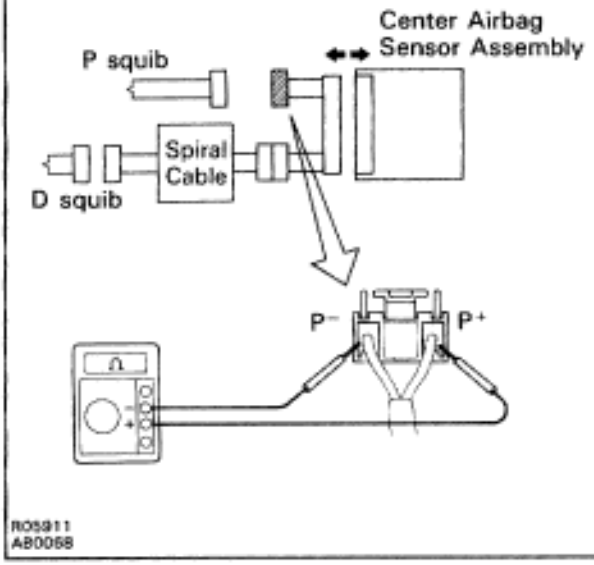

P (1) Disconnect center airbag sensor assembly connector.
(2) Release airbag activation prevention mechanism on center airbag sensor assembly connector. (See page RS–72)

C For the connector (on the center airbag sensor assembly side) between the center airbag sensor assembly and front passenger airbag assembly measure the resistance between P^+ and P^-.

OK **Resistance: 1 k or higher**

OK

NG **Repair or replace harness or connector between center airbag sensor assembly and front passenger airbag assembly.**

6 Check center airbag sensor assembly.

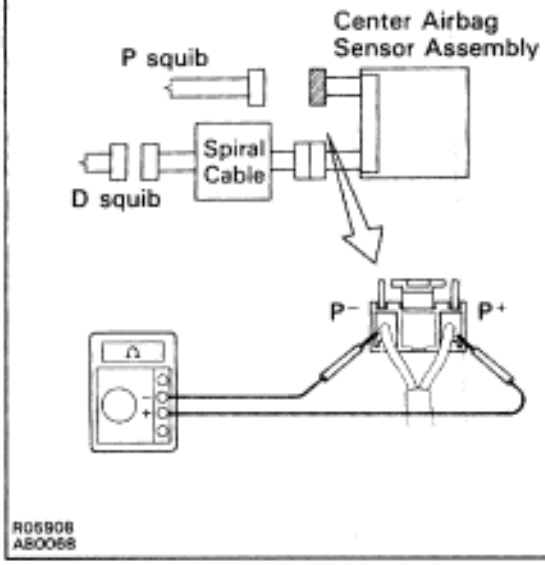

P Connect center airbag sensor assembly connector.

C For the connector (on the center airbag sensor assembly side) between the center airbag sensor assembly and front passenger airbag assembly measure the resistance between P^+ and P^-.

OK **Resistance: 1 k or higher**

OK

NG **Replace center airbag sensor assembly.**

From the results of the above inspection, the malfunctioning part can now be considered normal. To make sure of this, use the simulation method to check.

DTC 54 Open in P Squib Circuit

CIRCUIT DESCRIPTION

The P squib circuit consists of the center airbag sensor assembly and front passenger airbag assembly. It causes the airbag to deploy when the airbag deployment conditions are satisfied.
For details of the function of each component see FUNCTION OF COMPONENTS on page RS–4. Diagnostic trouble code 54 is recorded when an open is detected in the P squib circuit.

DTC No.	Diagnosis
54	• Open circuit in P^+ wire harness P^- wire harness of squib. • P squib malfunction. • Center airbag sensor assembly malfunction.

WIRING DIAGRAM

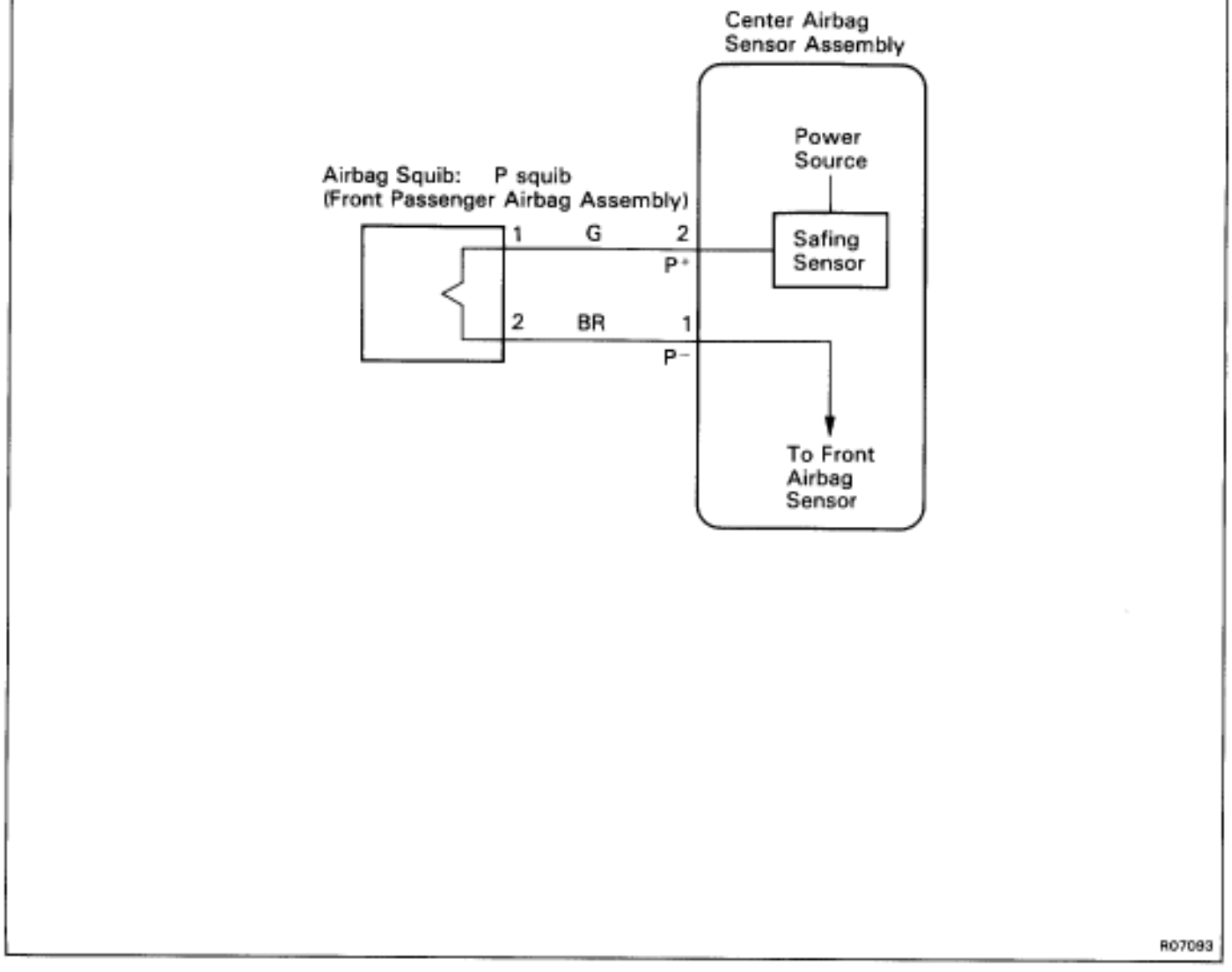

INSPECTION PROCEDURES

[P] Preparation **[C]** Check

1 Preparation.

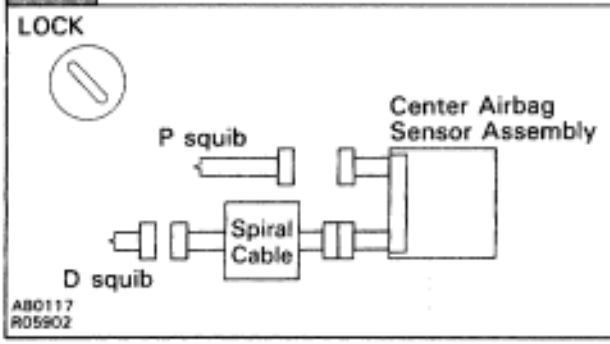

P (1) Disconnect negative (–) terminal cable from the battery, and wait at least 90 seconds.
(2) Remove steering wheel pad. (See RS–10)
(3) Disconnect connector of front passenger airbag assembly. (See page Rs–20)

Caution

Store the steering wheel pad with the front surface facing upward.

2 Check P squib circuit.

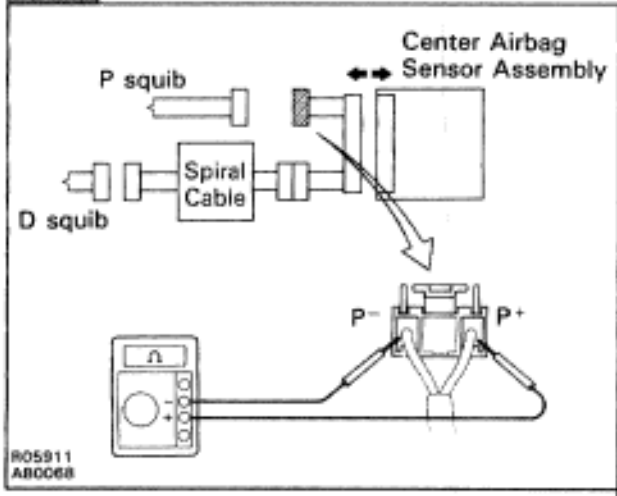

P Disconnect center airbag sensor assembly connector.

C For the connector (on the center airbag sensor assembly side) between the center airbag sensor assembly and front passenger airbag assembly measure the resistance between P^+ and P^-.

OK **Resistance: Less than 1**

NG

OK **Repair or replace harness or connector between center airbag sensor assembly and front passenger airbag assembly.**

3 Check center airbag sensor assembly.

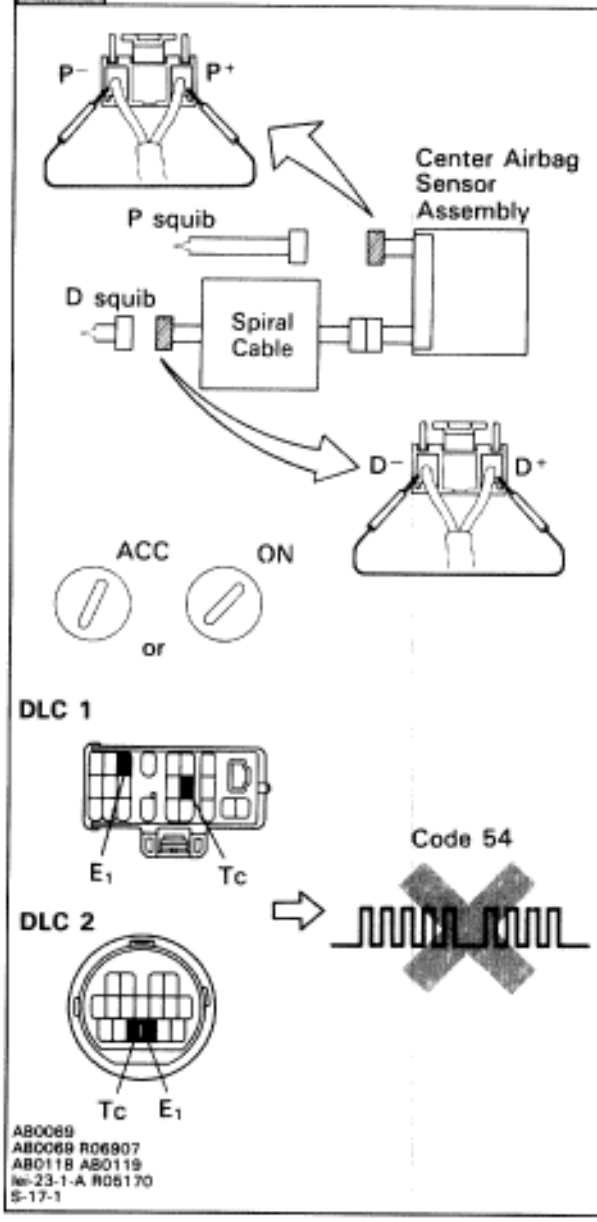

P

(1) Connect connector to center airbag sensor assembly.
(2) Using a service wire, connect D^+ and D^- on spiral cable side of connector between spiral cable and steering wheel pad.
(3) Using a service wire, connect P^+ and P^- on center airbag sensor assembly side of connector between center airbag sensor assembly and front passenger airbag assembly.
(4) Connect negative (–) terminal cable to battery, and wait at least 2 seconds.

C

(1) Turn ignition switch to ACC or ON, and wait at least 2 seconds.
(2) Clear malfunction code stored in memory. (See page RS–47)
(3) turn ignition switch to LOCK, and wait at least 20 seconds.
(4) Turn ignition switch to ACC or ON, and wait at least 20 seconds.
(5) Using SST, connect terminals Tc and E_1 of DLC1 or DLC2.
SST 09843–18020
(6) Check diagnostic trouble code.

OK **Diagnostic trouble code 54 is not output.**

Hint Codes other than code 54 may be output at this time, but they are not relevant to this check.

OK

NG **Replace center airbag sensor assembly.**

4 Check P squib.

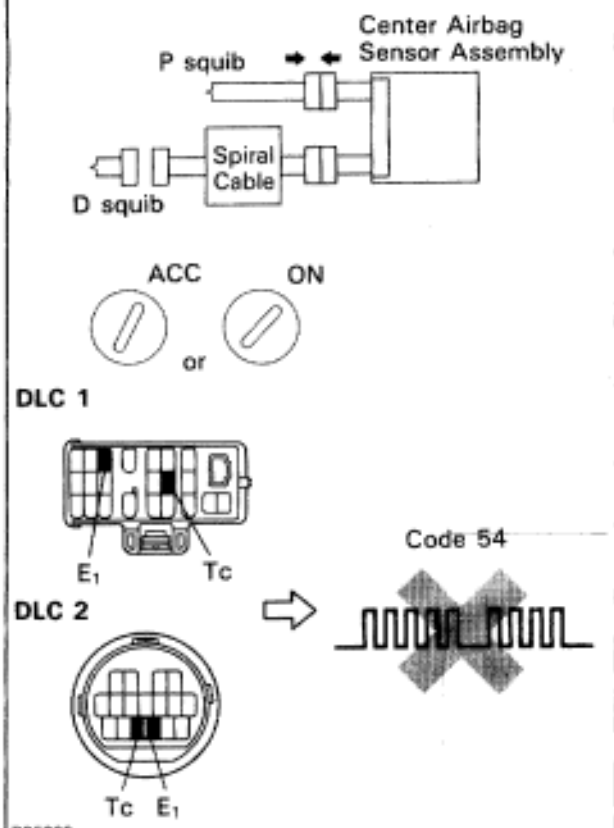

P

(1) Turn ignition switch to LOCK.
(2) Disconnect negative (–) terminal cable from the battery, and wait at least 90 seconds.
(3) Connect front passenger airbag assembly connector.
(4) Connect negative (–) terminal cable to battery, and wait at least 2 seconds.

C

(1) Turn ignition switch to ACC or ON, and wait at least 20 seconds.
(2) Clear malfunction code stored in memory. (See page RS–47)
(3) turn ignition switch to LOCK, and wait at least 20 seconds.
(4) Turn ignition switch to ACC or ON, and wait at least 20 seconds.
(5) Using SST, connect terminals Tc and E_1 of DLC1 or DLC2.
SST 09843–18020
(6) Check diagnostic trouble code.

OK **Diagnostic trouble code 54 is not output.**

Hint Codes other than code 54 may be output at this time, but they are not relevant to this check.

OK

NG **Replace front passenger airbag assembly.**

From the results of the above inspection, the malfunctioning part can now be considered normal. To make sure of this, use the simulation method to check.

SRS Warning Light System (Always lit up when ignition switch is in Lock position.)

CIRCUIT DESCRIPTION

The SRS warning light is located on the cluster finish panel.
When the SRS is normal, the SRS warning light lights up for approx. 6 seconds after the ignition switch is turned from LOCK position to ACC or ON position, and then turns off automatically.
If there is a malfunction in the SRS, the SRS warning light lights up to inform the driver of the abnormality. When terminals Tc and E_1 of the DLC1 or DLC2 are connected, the diagnostic trouble code is displayed by the blinking of the SRS warning light.

WIRING DIAGRAM

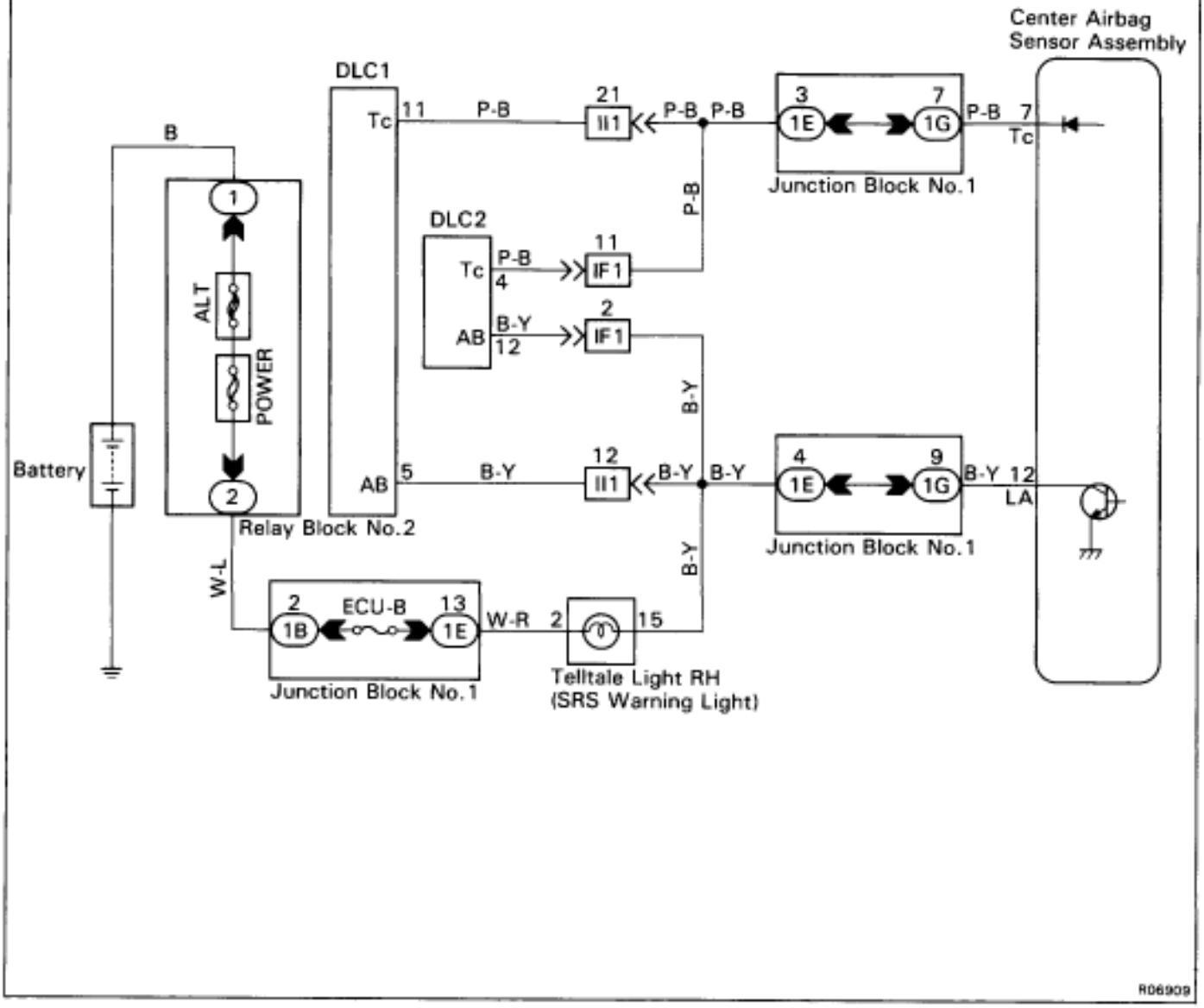

INSPECTION PROCEDURES

[P] Preparation **[C]** Check

1 **Does SRS warning light turn off?**

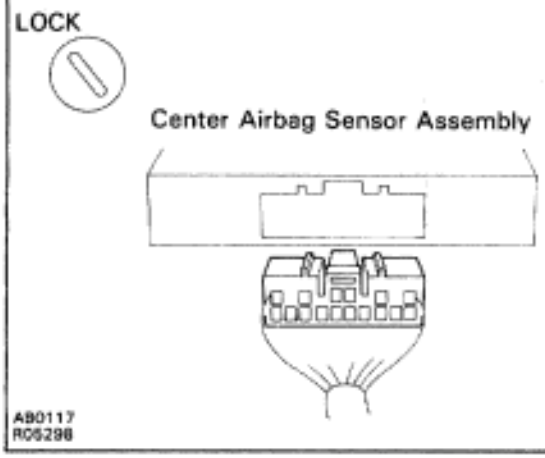

P (1) Turn ignition switch to LOCK.
(2) Disconnect negative (–) terminal cable from the battery, and wait at least 90 seconds.
(3) Disconnect center airbag sensor assembly connector.
(4) Connect negative (–) terminal cable to battery.

C Check operation of SRS warning light.

YES

NO **Check SRS warning light circuit or terminal AB circuit of DLC1 or DLC2.**

Replace center airbag sensor assembly.

Tc Terminal Circuit

CIRCUIT DESCRIPTION

By connecting terminals Tc and E_1 of the DLC1 or DLC2, the center airbag sensor assembly is set in the diagnostic trouble code output mode. The diagnostic trouble codes are displayed by the blinking of the SRS warning light.

WIRING DIAGRAM

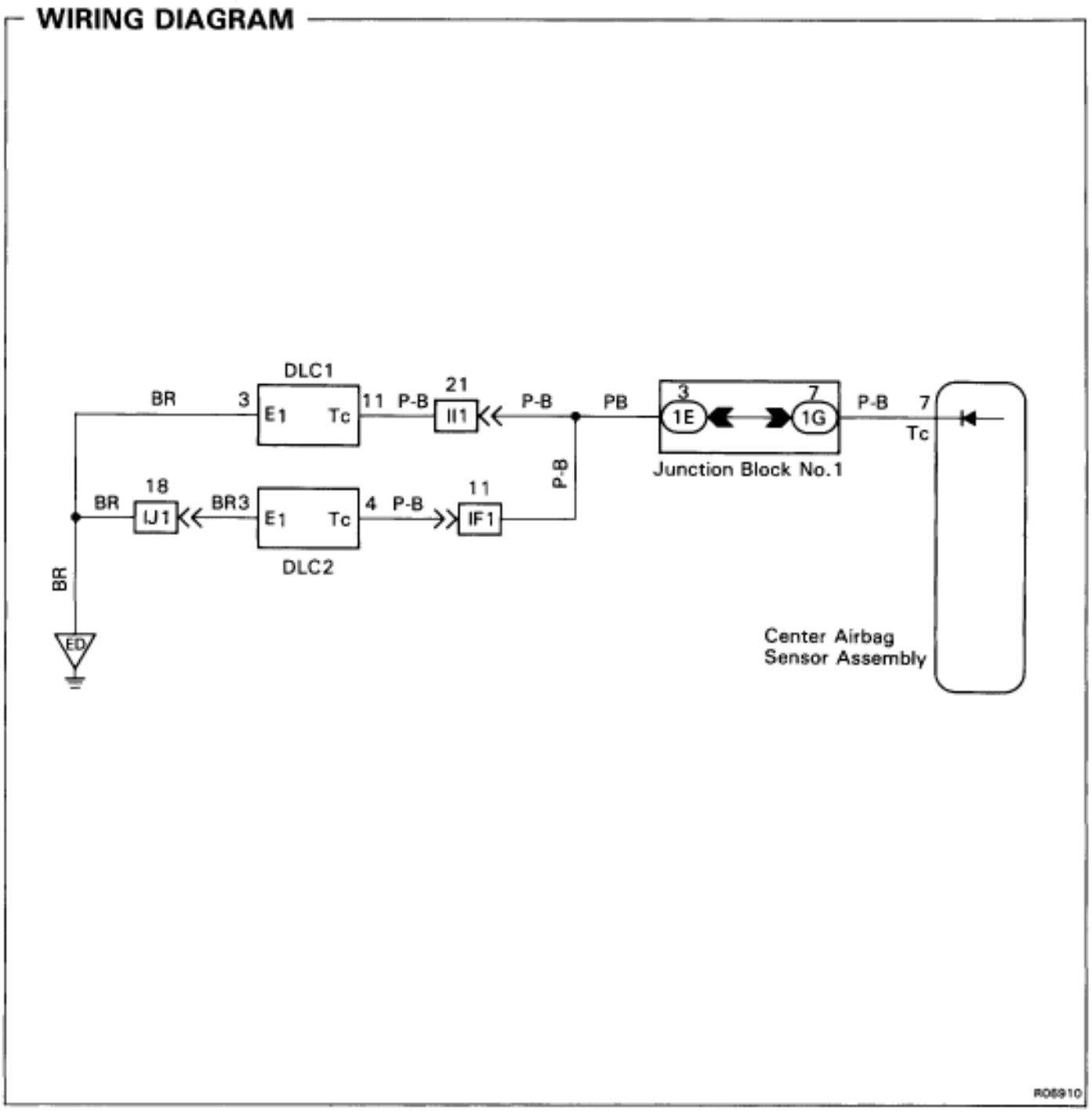

INSPECTION PROCEDURES

[P] Preparation **[C]** Check

HINT: If the diagnostic trouble code is not displayed, do the following troubleshooting:

1 Does SRS warning light light up for approx. 6 seconds?

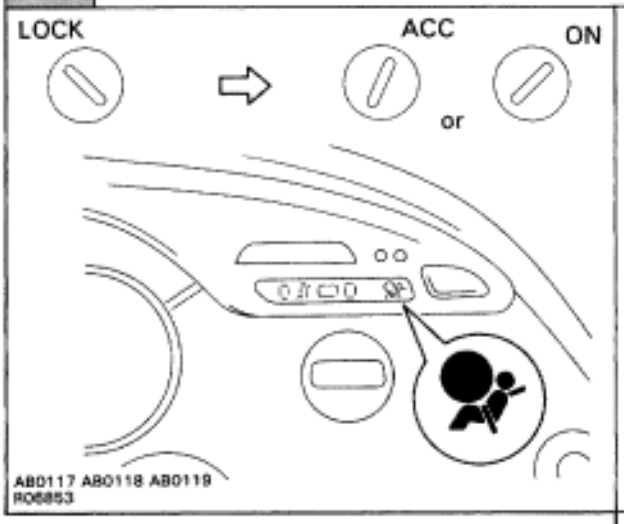

C Check operation of SRS warning light after ignition switch turned from LOCK position to ACC or ON position.

YES

NO → **Check SRS warning light system. (See page RS–44)**

2 Check voltage between terminals Tc and E_1 of DLC1 and DLC2.

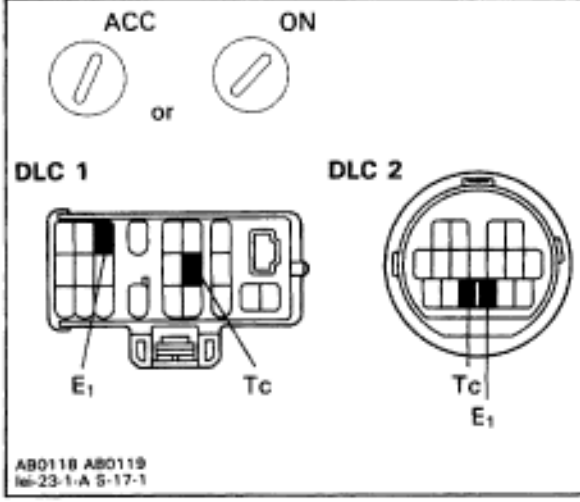

P Turn ignition switch to ACC or ON.

C Measure voltage between terminals Tc and E_1 of DLC1 or DLC2.

OK **Voltage: Battery positive voltage**

NG

OK → **Go to step 4.**

3 Check voltage between terminals Tc of DLC1 or DLC2 and body ground.

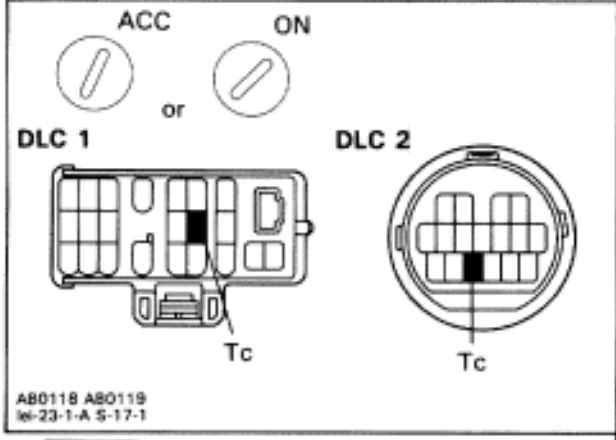

C Measure voltage between terminals Tc of DLC1 or DLC2 and body ground.

OK **Voltage: Battery positive voltage**

NG

OK → **Check harness between terminals E_1 of DLC1 or DLC2 and body ground.**

4 Check center airbag sensor assembly.

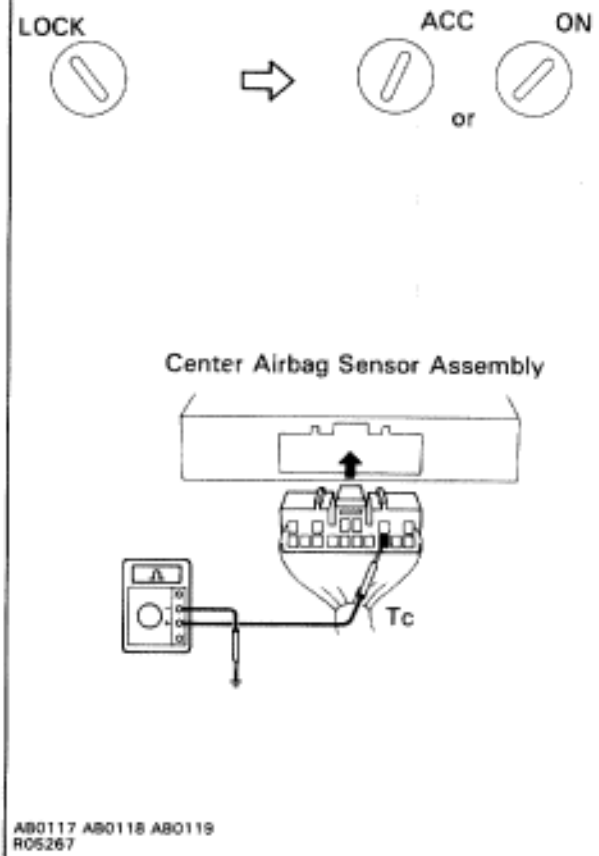

P
(1) Turn ignition switch to LOCK.
(2) Disconnect negative (–) terminal cable from the battery, and wait at least 90 seconds.
(3) Disconnect center airbag sensor assembly connector.
(4) Insert test probe into terminal Tc from back side as shown.
(5) Connect center airbag sensor assembly connector with check pin.
(6) Connect negative (–) terminal cable to battery.
(7) Turn ignition switch to ACC or ON and wait at least 20 seconds.
(8) Using service wire, connect test probe of terminal Tc to body ground.

C Check operation SRS warning light.

OK **SRS warning light comes on.**

NOTICE: Never made a mistake with the terminal connection position as this will cause a malfunction.

NG

OK → **Check harness between center airbag sensor assembly and DLC1 or DLC2.**

Replace center airbag sensor assembly.

HINT: If the diagnostic trouble code is displayed without a DTC check procedure, perform the following trouble-shooting.

1 Check resistance between terminal Tc of center airbag sensor assembly and body ground.

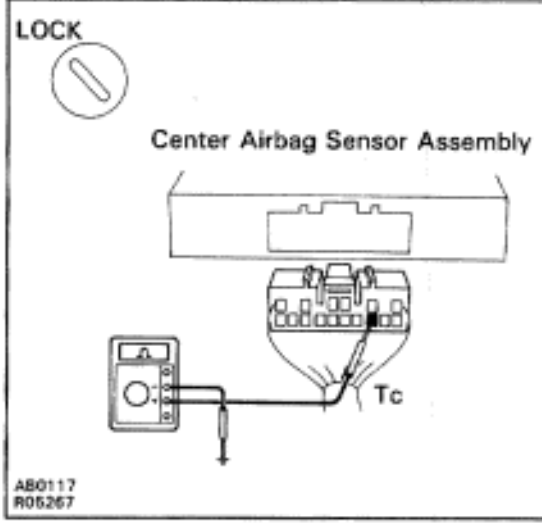

P (1) Turn ignition switch to LOCK.
(2) Disconnect negative (–) terminal cable from the battery, and wait at least 90 seconds.
(3) Disconnect center airbag sensor assembly connector.

C Check resistance between terminal Tc of center airbag sensor assembly connector and body ground.

OK **Resistance: 1 M or Higher**

NG

Repair or replace harness or connector.

OK

Replace center airbag sensor assembly.

SERVICE SPECIFICATIONS

SERVICE DATA

FRONT AIRBAG SENSOR	
⊕S – ⊕A	755–885 Ω
⊕S – ⊖S	1 MΩ or Higher
⊖S – ⊖A	Less than 1 Ω

TORQUE SPECIFICATIONS

Part tightened	N·m	kgf·cm	ft·lbf
Steering wheel	35	360	26
Steering wheel pad	7.1	72	62 in.·lbf
Front passenger airbag assembly x Instrument panel reinforcement	21	210	15
Front passenger airbag assembly x Instrument panel	8.8	90	78 in.·lbf
Front airbag sensor	29	300	22
Airbag sensor assembly	21	210	15

SUSPENSION AND AXLE

TROUBLESHOOTING

Use the table below to help you find the cause of the problem. The numbers indicate the priority of the likely cause of the problem. Check each part in order. If necessary, replace these parts.

See Page / Parts Name / Trouble	Tires	Cold tire inflation pressure	Wheel alignment	Springs	Stabilizer bar	Shock absorber	Ball joint	Hub bearings	Steering linkage	Steering gear	Suspension parts	Overload	Wheel balance
See Page	SA–3	SA–3	SA–4	SA–21 SA–85	SA–32 SA–96	SA–32 SA–96	SA–26,29 SA–89,92	SA–13 SA–35			SA–20 SA–83		SA–3
Wander / pulls	1		2					4	3	5	6		
Bottoming				2		3						1	
Sways / pitches	1				2	3							
Front wheel shimmy	1		4			3	5	6	7	8			2
Abnormal tire wear		1	2			4					3		

V00313

GENERAL INSPECTION

1. INSPECT TIRE

(a) Check the tires for wear and for the proper inflation pressure.

Cold tire inflation pressure (2JZ–GE)

Tire size	Front kPa (kgf/cm^2, psi)	Rear kPa (kgf/cm^2, psi)
225/50ZR16	230 (2.3, 33)	—
245/50ZR16	—	250 (2.5, 36)

Cold tire inflation pressure (2JZ–GTE)

Tire size	Front kPa (kgf/cm^2, psi)	Rear kPa (kgf/cm^2, psi)
235/45ZR17	250 (2.5, 36)	—
255/40ZR17	—	250 (2.5, 36)

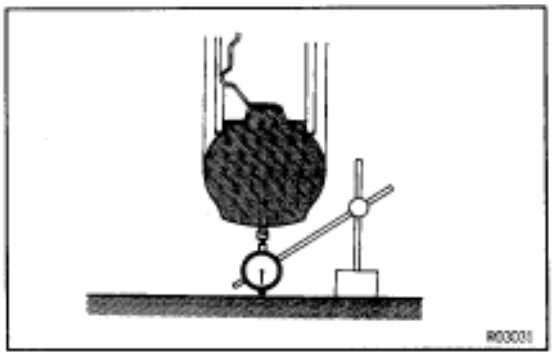

(b) Check the tire runout.

Tire runout:

Less than 1.4 mm (0.055 in.)

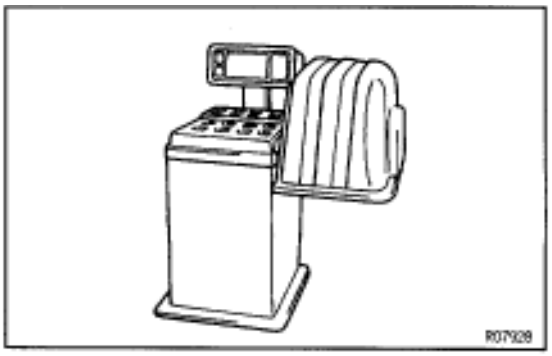

2. INSPECT WHEEL BALANCE

(a) Check and adjust the Off–the–car balance.

(b) If necessary, check and adjust the On–the–car balance.

Unbalance after adjustment:
5.0 g (0.011 lb) or less

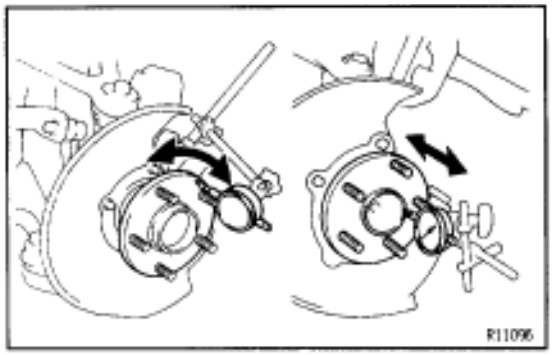

3. CHECK WHEEL BEARING LOOSENESS

(a) Check the backlash in bearing shaft direction.

Maximum: 0.05 mm (0.0020 in.)

(b) Check the axle hub deviation.

Maximum: 0.05 mm (0.0020 in.)

4. CHECK FRONT SUSPENSION FOR LOOSENESS

5. CHECK STEERING LINKAGE FOR LOOSENESS

6. CHECK BALL JOINT FOR LOOSENESS

7. CHECK SHOCK ABSORBER WORK PROPERLY

- Check for oil leak
- Check mounting bushings for wear
- Bounce front and rear of the vehicle

WHEEL ALIGNMENT

FRONT WHEEL ALIGNMENT

1. MEASURE VEHICLE HEIGHT

Front vehicle height

Engine	Tire size	Height
2JZ–GE	225/50ZR16	185 mm (7.28 in.)
2JZ–GTE	235/45ZR17	187 mm (7.36 in.)

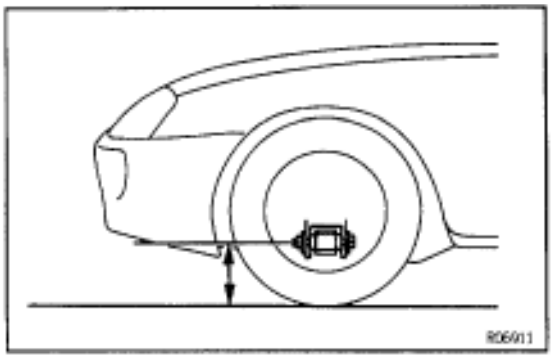

Measuring point:

Measure from the ground to the center of the lower suspension arm front mounting bolt.

NOTICE: Before inspecting the wheel alignment, adjust the vehicle height to specification.

If the vehicle height is not to specification, try to adjust it by pushing down on or lifting the body.

2. INSTALL CAMBER–CASTER–KINGPIN GAUGE OR ONTO WHEEL ALIGNMENT TESTER

Follow the specific instructions of the equipment manufacturer.

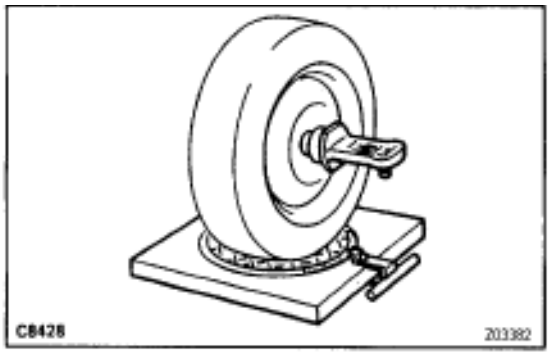

3. INSPECT CAMBER, CASTER AND STEERING AXIS INCLINATION

Specifications

	2JZ–GE	2JZ–GTE
Camber Left–right error	–0°20'±45' 30' or less	–0°30'±45' 30' or less
Caster Left–right error	3°20'±45' 30' or less	3°30'±45' 30' or less
Steering axis inclination	9°35'±45' (Reference)	9°45'±45' (Reference)

If the steering axis inclination is not as specified, after camber and caster have been correctly adjusted, recheck the steering knuckle front wheel for bearing or looseness.

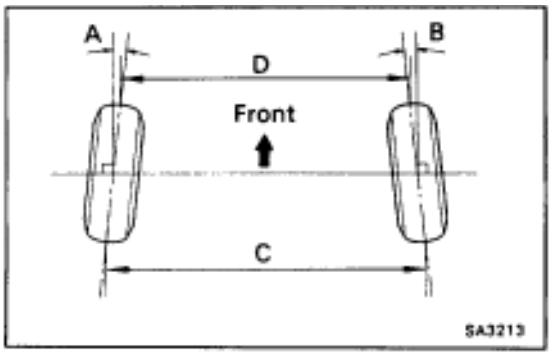

4. INSPECT TOE–IN

Toe–in (total):

A+B: 0° ± 0.2°

C–D: 0 ± 2 mm (0 ± 0.08 in.)

If toe–in is not within specification adjust by the tie rod end.

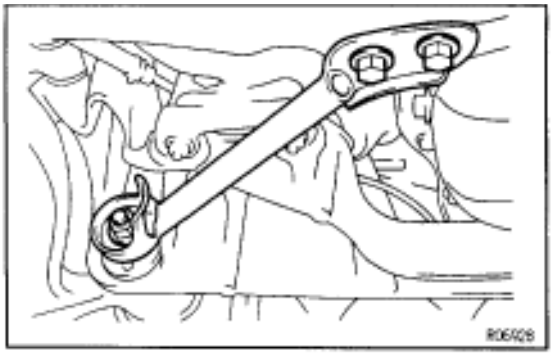

5. ADJUST CAMBER AND CASTER

(a) Remove the engine under cover.

(b) Remove the nut, 2 bolts and front lower arm bracket stay.

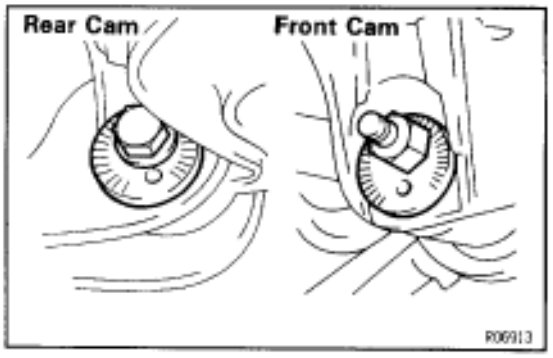

(c) Loosen the front and/or rear adjusting cam nuts.

(d) Adjust the camber and caster by front and/or rear adjusting cams. (See adjustment chart)

Specifications

	2JZ–GE	2JZ–GTE
Camber Left–right error	–0°20' ± 30' 30' or less	–0°30' ± 30' 30' or less
Caster Left–right error	3°20' ± 30' 30' or less	3°30' ± 30' 30' or less

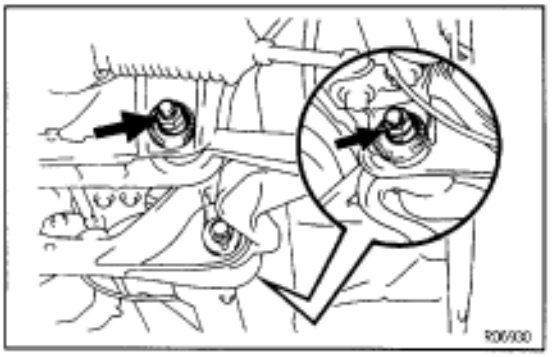

(e) Torque the front and/or rear adjusting cam nuts.
Torque: 226 N·m (2,300 kgf·cm, 166 ft·lbf)

(f) Install the front lower arm bracket stay.
Torque:
Nut: 43 N·m (440 kgf·cm, 32 ft·lbf)
Bolt: 59 N·m (600 kgf·cm, 43 ft·lbf)

(g) Install the engine under cover.

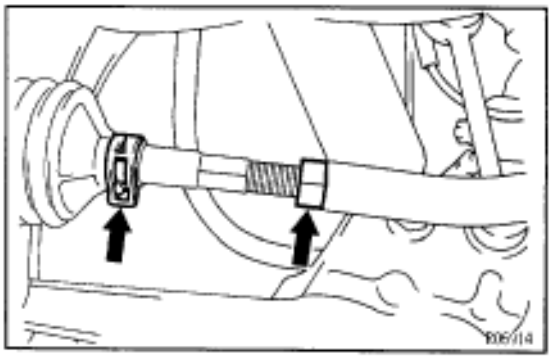

6. ADJUST TOE–IN

(a) Remove the boot clamps.

(b) Loosen the tie rod end lock nuts.

(c) Turn the left and right tie rod ends an amount to adjust the toe–in.
Toe–in (total):
A+ B: 0° ± 0.1°
C–D: 0 ± 1 mm (0 ± 0.04 in.)

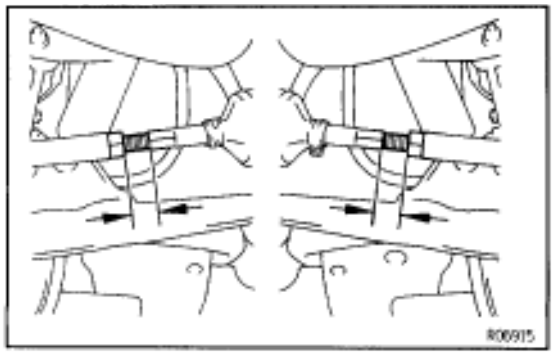

HINT: Ensure that the lengths of the left and right tie rods are the same.
Tie rod end length left–right error:
Less than 1.5 mm (0.059 in.)

(d) Tighten the tie rod end lock nut.
Torque: 56 N·m (570 kgf·cm, 41 ft·lbf)

(e) Place the boot on the seat and clip it.
HINT: Ensure that the boots are not twisted.

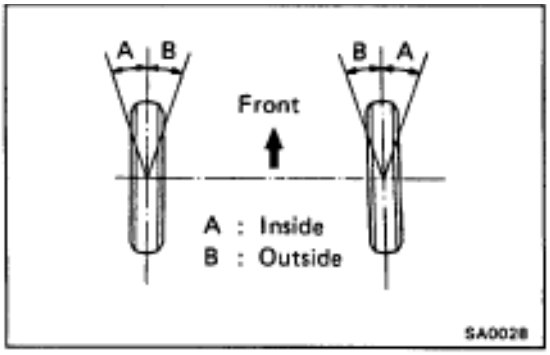

7. INSPECT WHEEL ANGLE

Wheel angle

	2JZ–GE	2JZ–GTE
Inside wheel	35˚00’ (33˚00’~36°00’)	34˚55’ (32°55’~35°55’)
Outside wheel	30˚45’ (Reference)	30˚35’ (Reference)

If wheel angle differ from the standard specifications, check to see if the lengths of the left and right tie rods are the same.
HINT: If the tie rods lengths are not equal, the wheel angle cannot be adjusted properly.
Reinspect the toe–in after adjusting the tie rods lengths.

ADJUSTMENT CHART

HOW TO READ ADJUSTMENT CART

(a) Mark on the graph the measurements taken from the vehicle.

Example (2JZ–GE):

Camber: +0˚10’

Caster: +4˚20’

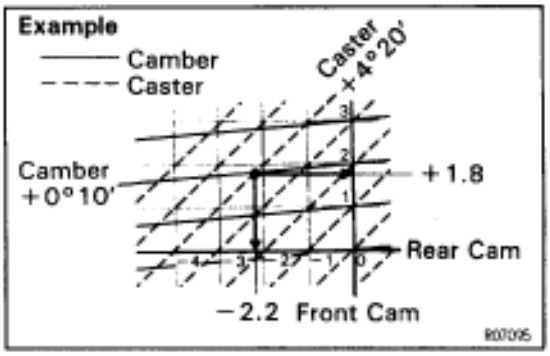

(b) As shown in the illustration, read from the graph the amounts by which the front and/or rear cams are to be adjusted.

Amount to turn adjusting cam (by graduation):

Front cam: + (Longer) 1.8

Rear cam: – (Shorter) 2.2

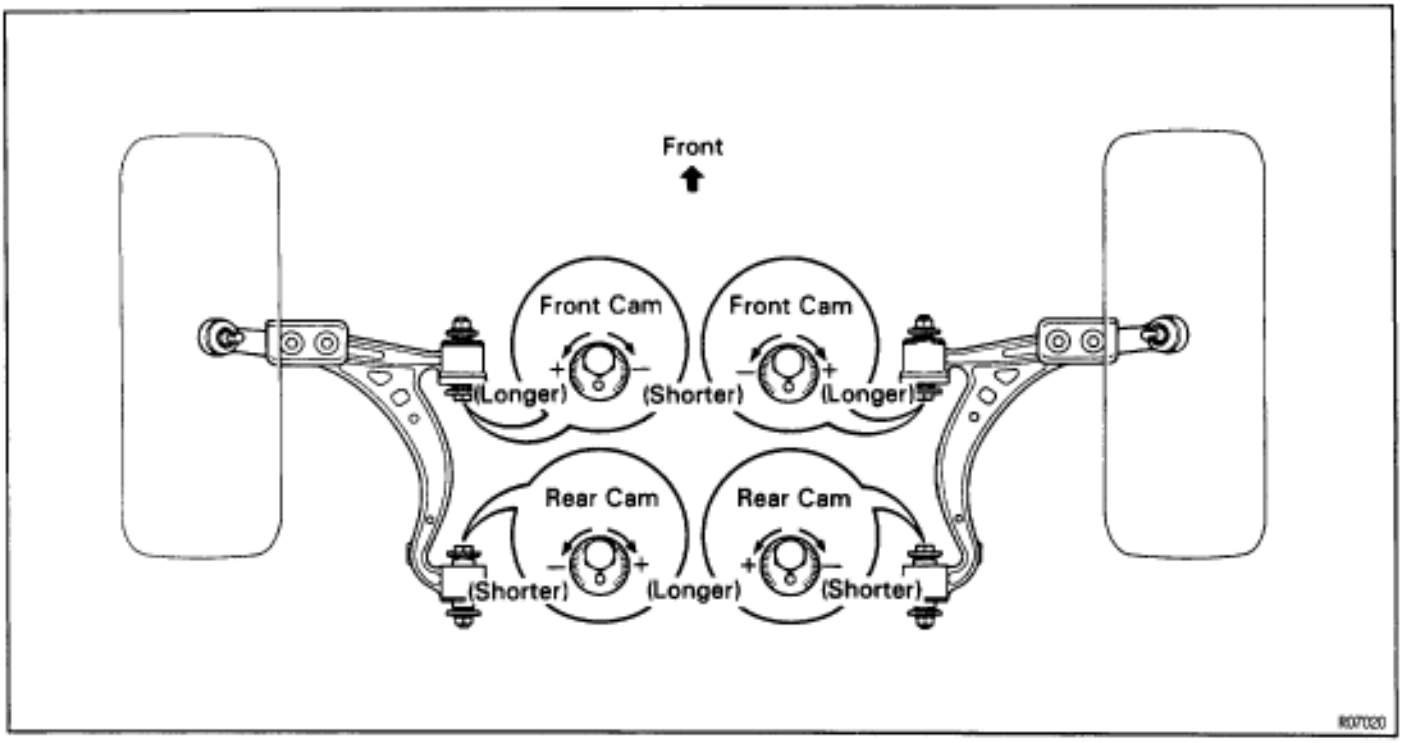

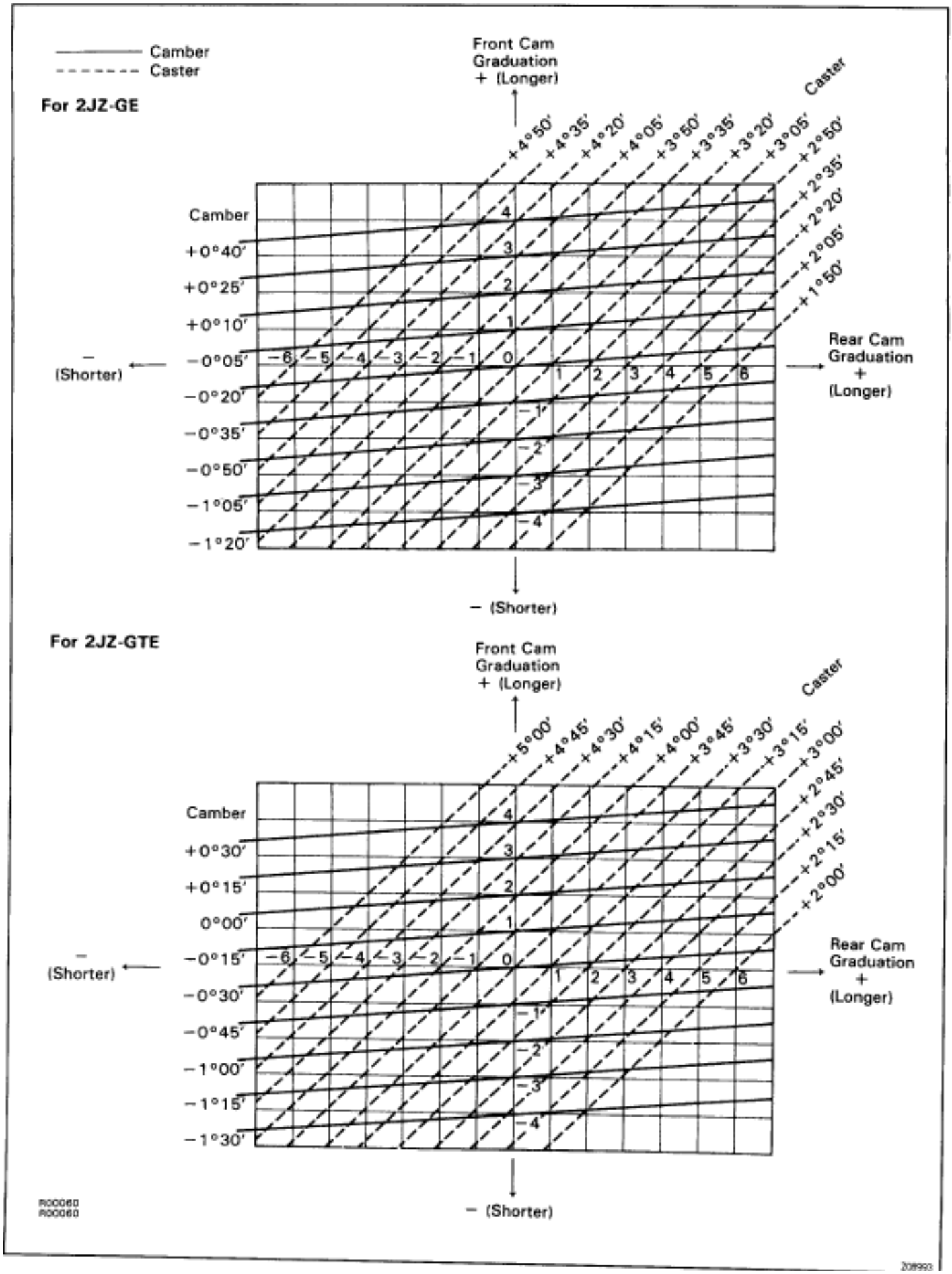
Camber
Caster
For 2JZ-GE
Front Cam Graduation + (Longer)
Caster
+4°50'
+4°35'
+4°20'
+4°05'
+3°50'
+3°35'
+3°20'
+3°05'
+2°50'
+2°35'
+2°20'
+2°05'
+1°50'
Camber
+0°40'
+0°25'
+0°10'
−0°05'
−0°20'
−0°35'
−0°50'
−1°05'
−1°20'
4
3
2
1
0
−1
−2
−3
−4
−6 −5 −4 −3 −2 −1
1 2 3 4 5 6
− (Shorter)
Rear Cam Graduation + (Longer)
− (Shorter)
For 2JZ-GTE
Front Cam Graduation + (Longer)
Caster
+5°00'
+4°45'
+4°30'
+4°15'
+4°00'
+3°45'
+3°30'
+3°15'
+3°00'
+2°45'
+2°30'
+2°15'
+2°00'
Camber
+0°30'
+0°15'
0°00'
−0°15'
−0°30'
−0°45'
−1°00'
−1°15'
−1°30'
4
3
2
1
0
−1
−2
−3
−4
−6 −5 −4 −3 −2 −1
1 2 3 4 5 6
− (Shorter)
Rear Cam Graduation + (Longer)
− (Shorter)
R00060
R00060
208993

REAR WHEEL ALIGNMENT

1. MEASURE VEHICLE HEIGHT

Rear vehicle height

Engine	Tire size	Height
2JZ–GE	245/50ZR16	250 mm (9.84 in.)
2JZ–GTE	255/40ZR17	251 mm (9.88 in.)

Measuring point:

Measure from the ground to the center of the lower suspension arm No.2 mounting bolt.

NOTICE: Before inspecting the wheel alignment, adjust the vehicle height to specification.

If the vehicle height is not to specification, try to adjust it by pushing down on or lifting the body.

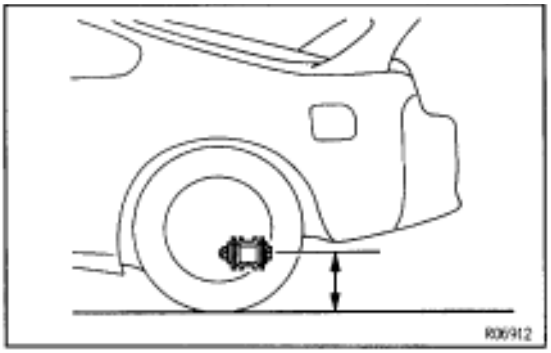

2. INSTALL CAMBER–CASTER–KINGPIN GAUGE OR ONTO WHEEL ALIGNMENT TESTER

Follow the specific instructions of the equipment manufacturer.

3. INSPECT CAMBER

	2JZ–GE	2JZ–GTE
Camber	–1°35' ± 45'	–1°30' ± 45'
Left–right error	30' or less	30' or less

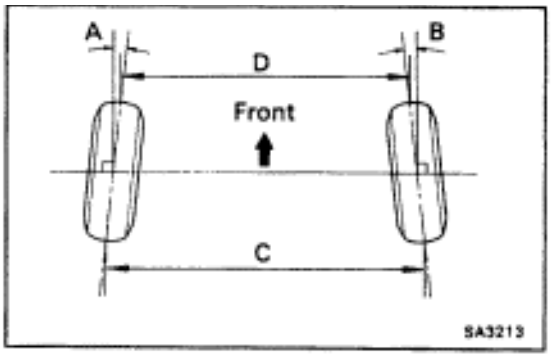

4. INSPECT TOE–IN

Toe–in (total):

A+ B: 0.3° ± 0.2°

C–D: 3 ± 2 mm (0.12 ± 0.08 in.)

5. ADJUST CAMBER AND TOE–IN

(a) Measure the length of the lower suspension arm No.1 and No.2, as shown in the illustration.

Length:

(E–F) or (F–E) should be less 4.0 mm.

If not, adjust the length of the arms by turning the adjusting cam, as shown, until (E–F) or (F–E) is less than 4.0 mm.

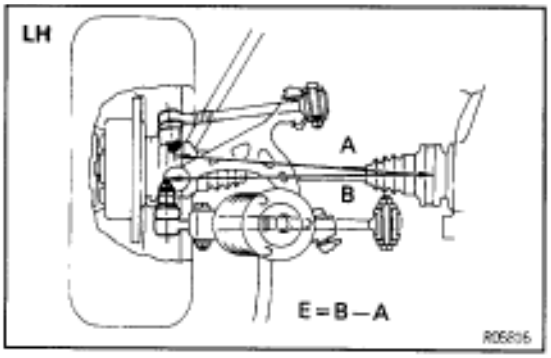

(b) Measure the camber and toe–in.

Specifications

Toe–in	A+ B: 0.3° ± 0.1° C–D: 3 ± 1 mm (0.12 ± 0.04 in.)
Camber (2JZ–GE) Left–right error	–1°35' ± 30' 30' or less
Camber (2JZ–GTE) Left–right error	–1°30' ± 30' 30' or less

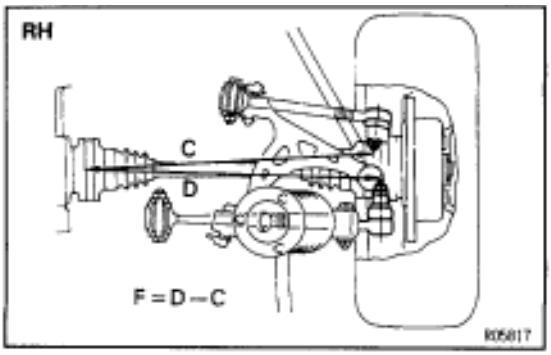

If the camber and toe–in are still not within the specification, adjust the camber and toe–in with the adjusting cam.

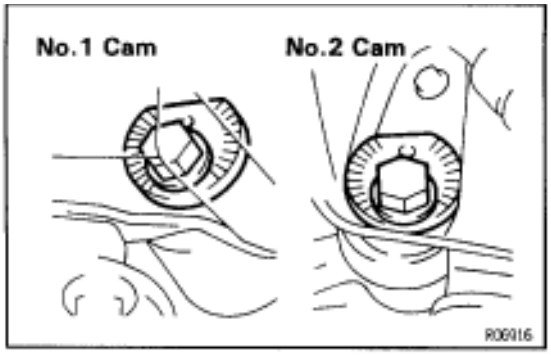

(c) Remove the bolt and disconnect the parking brake cable bracket.
(d) Loosen and adjust the No.1 and/or No.2 cams.
(e) Adjust camber and toe–in by turning the No.1 and / or No.2 cams.
(See adjustment chart)

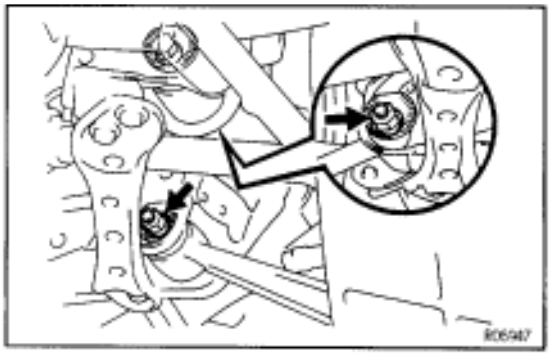

(f) Torque the No.1 and/or No.2 cam nuts.
Torque: 184 N·m (1,880 kgf·cm, 134 ft·lbf)
(g) Connect the parking brake cable bracket with the bolt.

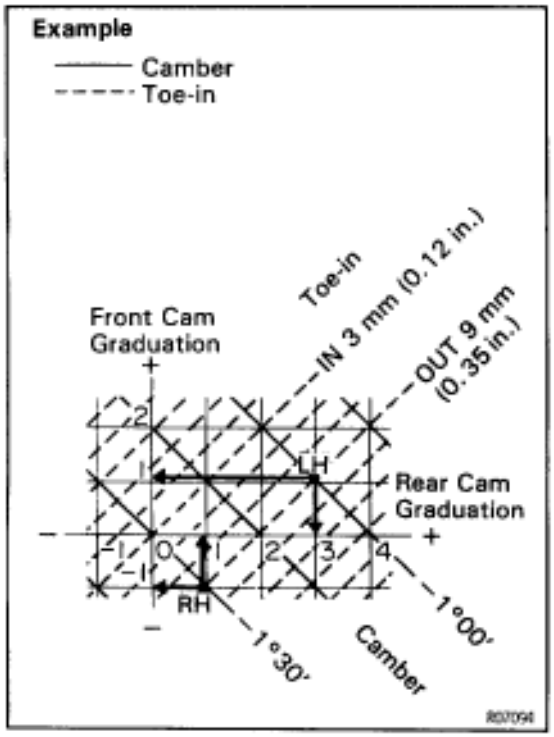

ADJUSTMENT CHART

'**HOW TO READ ADJUSTMENT CHART**

(a) Mark on the graph the measurements taken from the vehicle.

Example (2JZ–GTE):

Camber (LH): –1°00'

Camber (RH): –1°30'

Toe–in: OUT 9 mm (0.35 in.)

(b) As shown the illustration, from the graph the amounts by which the front and/or rear cam are to be adjusted.

Amount to turn adjusting cam (by graduation):

LH Front cam: + (Longer) 1.1

LH Rear cam: + (Longer) 3.0

RH Front cam: – (Shorter) 1.0

RH Rear cam: + (Longer) 0.9

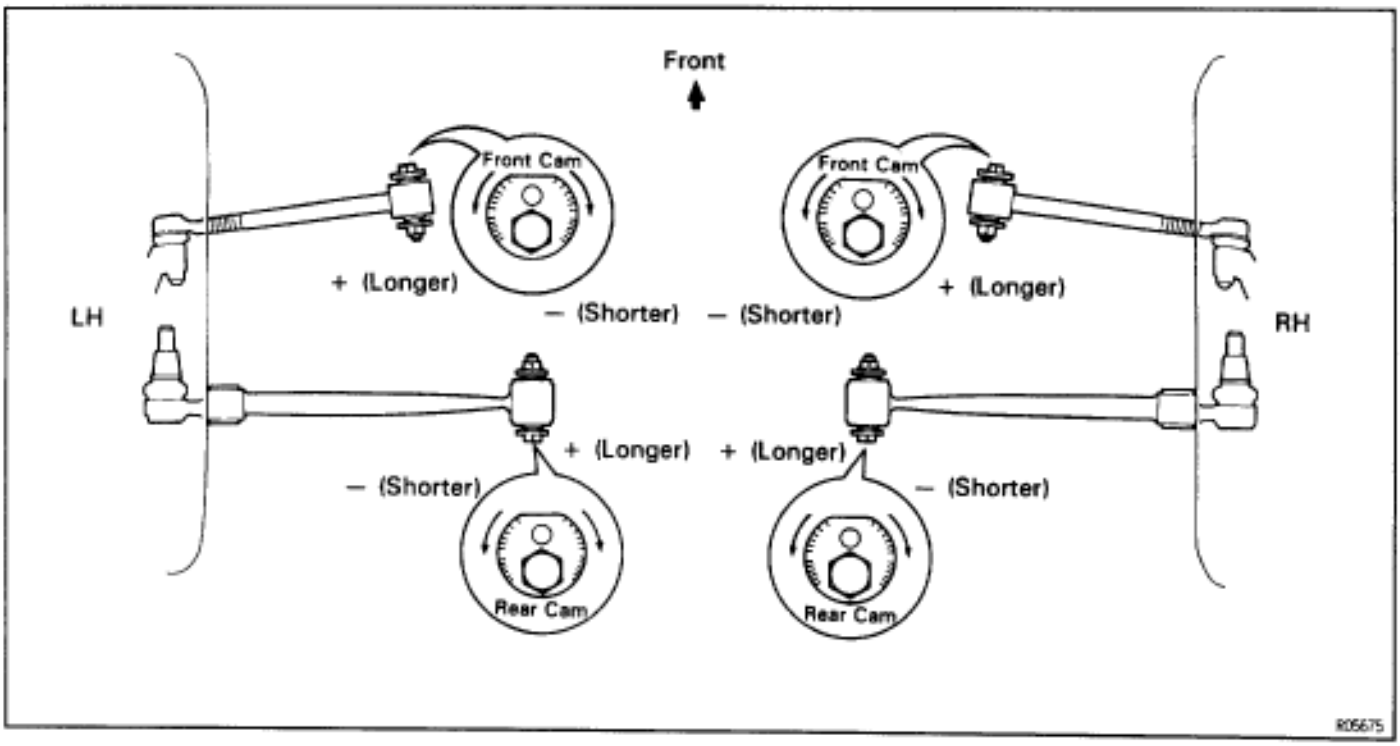

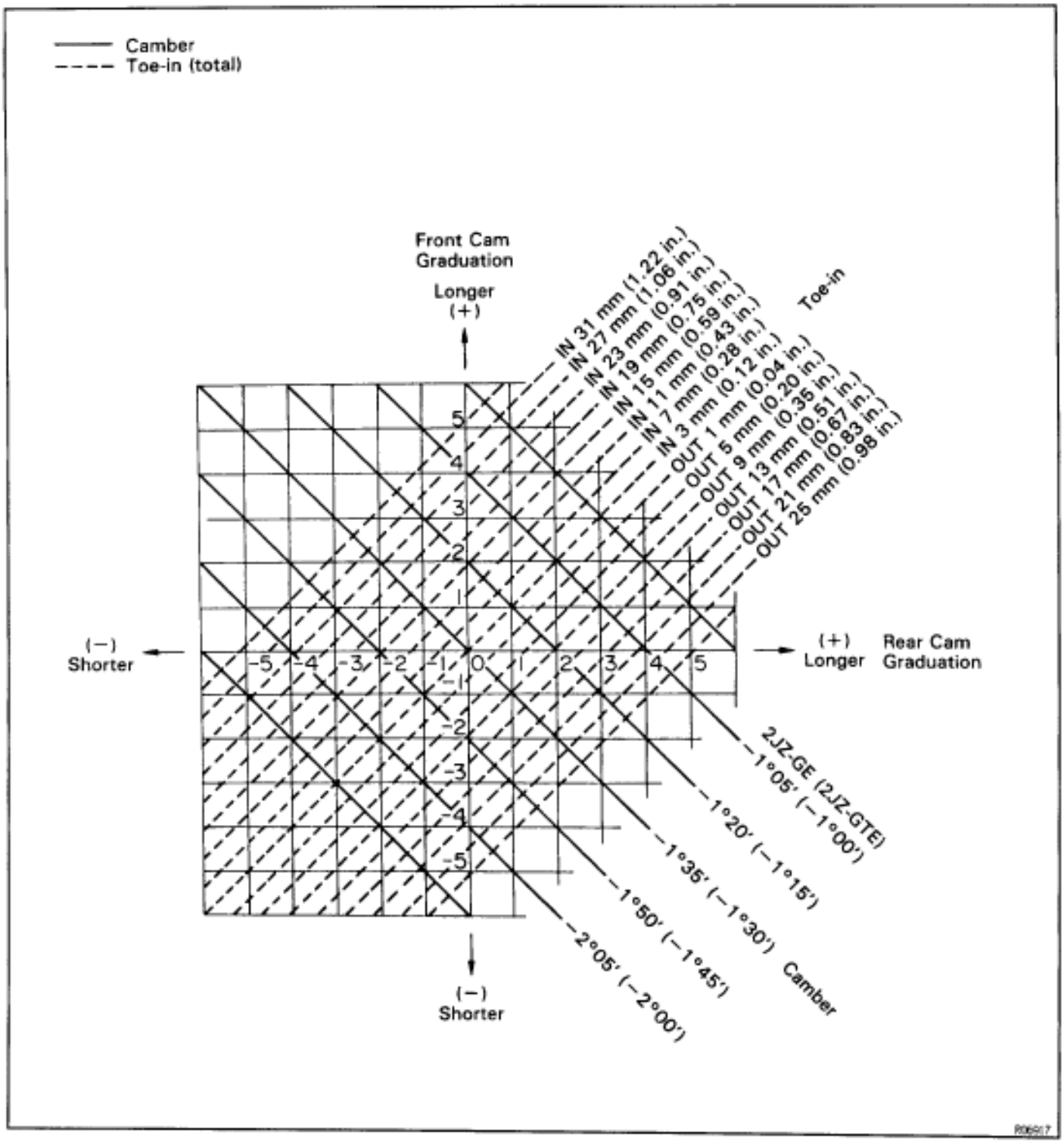
Camber
Toe-in (total)
Front Cam Graduation
Longer (+)
(−) Shorter
(+) Longer
Rear Cam Graduation
(−) Shorter
Toe-in
IN 31 mm (1.22 in.)
IN 27 mm (1.06 in.)
IN 23 mm (0.91 in.)
IN 19 mm (0.75 in.)
IN 15 mm (0.59 in.)
IN 11 mm (0.43 in.)
IN 7 mm (0.28 in.)
IN 3 mm (0.12 in.)
OUT 1 mm (0.04 in.)
OUT 5 mm (0.20 in.)
OUT 9 mm (0.35 in.)
OUT 13 mm (0.51 in.)
OUT 17 mm (0.67 in.)
OUT 21 mm (0.83 in.)
OUT 25 mm (0.98 in.)
2JZ-GE (2JZ-GTE)
1°05' (−1°00')
1°20' (−1°15')
1°35' (−1°30')
1°50' (−1°45')
2°05' (−2°00')
Camber

FRONT AXLE HUB

PREPARATION

SST (SPECIAL SERVICE TOOLS)

	09308–00010 Oil Seal Puller	Steering knuckle oil seal
	09608–00010 Steering Knuckle Oil Seal Replacer	
	09608–35014 Axle Hub & Drive Pinion Bearing Tool Set	
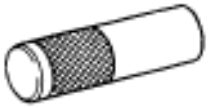	(09608–06040) Front Hub Inner Bearing Cone Replacer	
	(09608–06100) Front Hub Outer Bearing Replacer	
	(09608–06200) Rear Axle Bearing Replacer	
	09611–12010 Tie Rod End Puller	
	09628–10011 Ball Joint Puller	Hub bolt
	09628–62011 Ball Joint Puller	
	09950–40010 Puller B Set	

RECOMMENDED TOOLS

	09905–00013 Snap Ring Pliers.	Front axle hub bearing

EQUIPMENT

Dial indicator	
Torque wrench	

FRONT AXLE HUB COMPONENTS

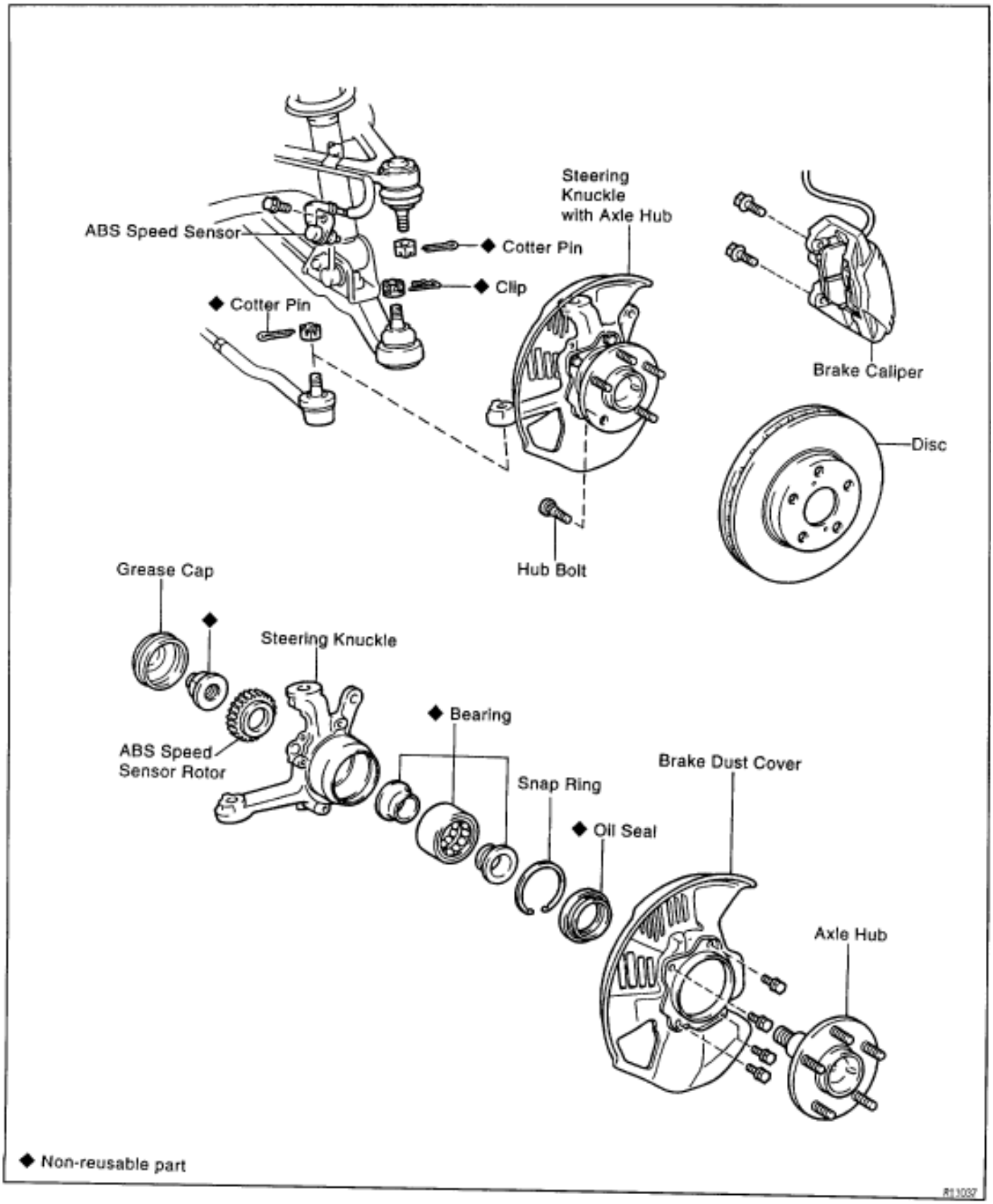

STEERING KNUCKLE WITH AXLE HUB REMOVAL

Installation is in the reverse order of removal.

INSTALLATION HINT: After installation, check ABS speed sensor signal and front wheel alignment.

(See page BR–62 and SA–4)

1. REMOVE FRONT WHEEL

Torque: 103 N·m (1,050 kgf·cm, 96 ft·lbf)



2. REMOVE FRONT BRAKE CALIPER AND DISC

(a) Remove the 2 bolts and brake caliper from the steering knuckle.

Torque: 118 N·m (1,200 kgf·cm, 87 ft·lbf)

(b) Support the brake caliper securely.

(c) Place matchmarks on the disc and axle hub.

(d) Remove the disc.

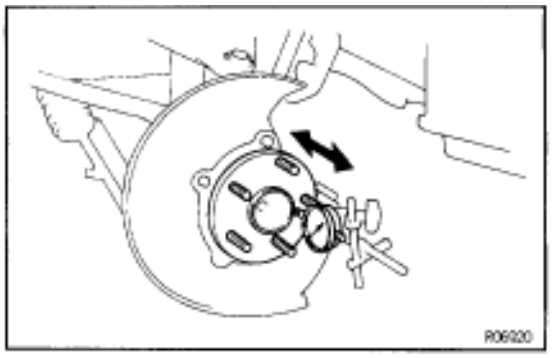

3. CHECK BACKLASH IN BEARING SHAFT DIRECTION

Place the dial indicator near the center of the axle hub and check the backlash in the bearing shaft direction.

Maximum:

0.05 mm (0.0020 in.)

If greater than the specified maximum, replace the bearing.

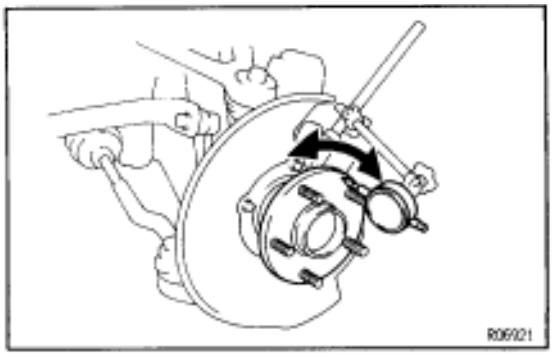

4. CHECK AXLE HUB DEVIATION

Using a dial indicator, check the deviation at the surface of the axle hub outside the hub bolt.

Maximum:

0.05 mm (0.0020 in.)

If greater than the specified maximum, replace the axle hub.

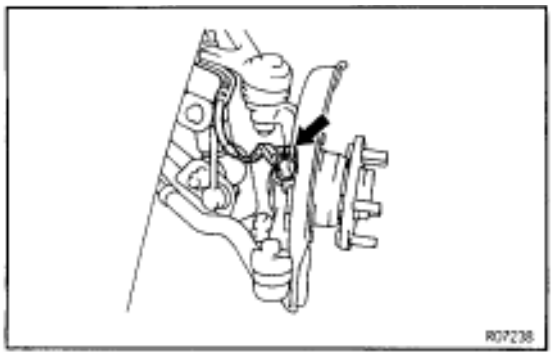

5. DISCONNECT ABS SPEED SENSOR FROM STEERING KNUCKLE

Remove the bolt and disconnect the sensor from the steering knuckle.

Torque: 8 N·m (80 kgf·cm, 69 in·lbf)

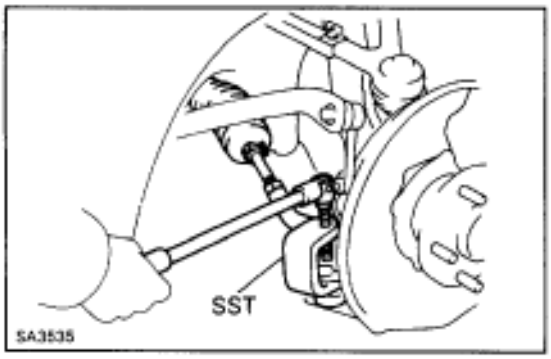

6. DISCONNECT TIE ROD END FROM STEERING KNUCKLE

(a) Remove the cotter pin and nut.
Torque: 49 N·m (500 kgf·cm, 36 ft·lbf)

(b) Using SST, disconnect the tie rod end from the steering knuckle.
SST 09611–12010

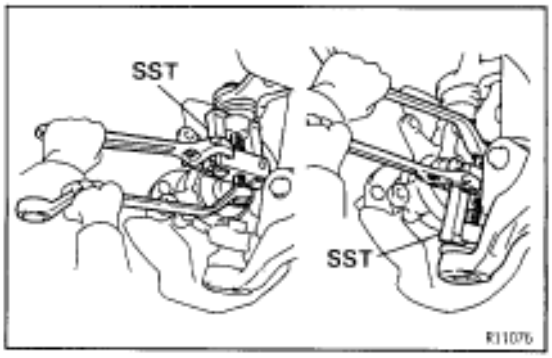

7. REMOVE STEERING KNUCKLE

(a) Remove upper side of the cotter pin and nut.
Torque: 103 N·m (1,050 kgf·cm, 76 ft·lbf)

(b) Remove lower side of the clip and nut.
Torque: 125 N·m (1,270 kgf·cm, 92 ft·lbf)

(c) Using SST, remove the steering knuckle from the upper and lower suspension arms.
SST 09628–62011

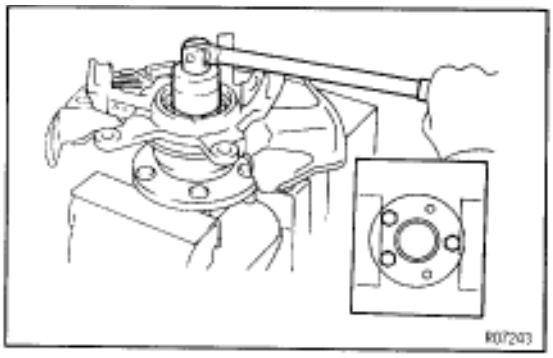

FRONT AXLE HUB DISASSEMBLY

1. REMOVE HUB GREASE CAP

Using a screwdriver, remove the hub grease cap from the steering knuckle.

2. REMOVE FRONT AXLE HUB LOCK NUT AND ABS SPEED SENSOR ROTOR

(a) Clamp the axle hub in a soft jaw vise.
HINT: Close vise until it holds hub bolt. Do not tighten further.

(b) Using a hammer and chisel, loosen the staked part of the lock nut and remove it.

(c) Remove the sensor rotor.
NOTICE: Take care not to scratch the serrations of the sensor rotor.

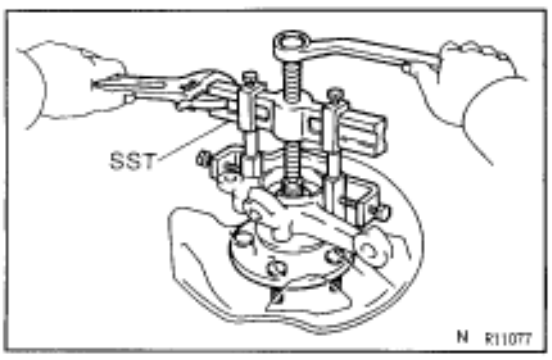

3. REMOVE AXLE HUB FROM STEERING KNUCKLE

(a) Remove the 4 bolts and shift the brake dust cover toward the hub side (outside).

(b) Using SST, remove the axle hub from the steering knuckle.
SST 09950–40010

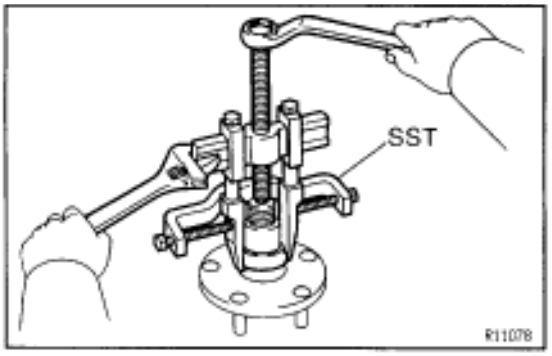

4. REMOVE INNER RACE (OUTSIDE) FROM AXLE HUB

Using SST, remove the inner race from the axle hub.
SST 09950–40010

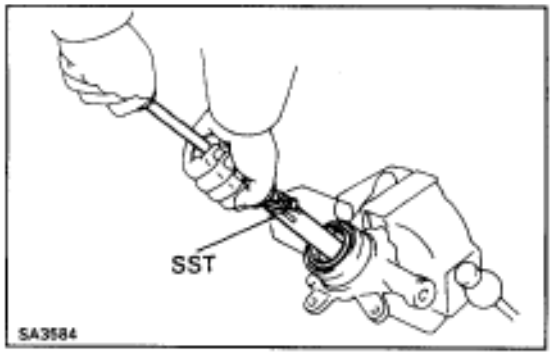

5. REMOVE OIL SEAL

Using SST, remove the oil seal from the steering knuckle.
SST 09308–00010

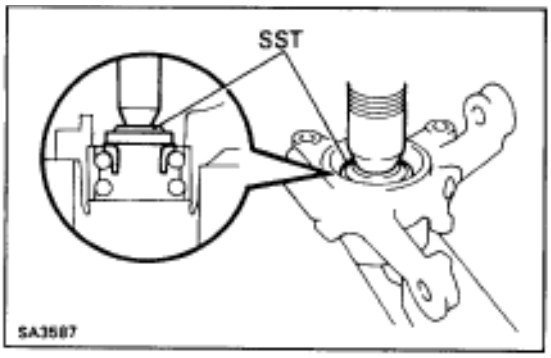

6. REMOVE BEARING FROM STEERING KNUCKLE

(a) Using snap ring pliers, remove the snap ring.
(b) Position the inner race above the bearing on the inner side.
(c) Using SST and a press, remove the bearing from the steering knuckle.
SST 09608–35014 (09608–06100)

FRONT AXLE HUB ASSEMBLY

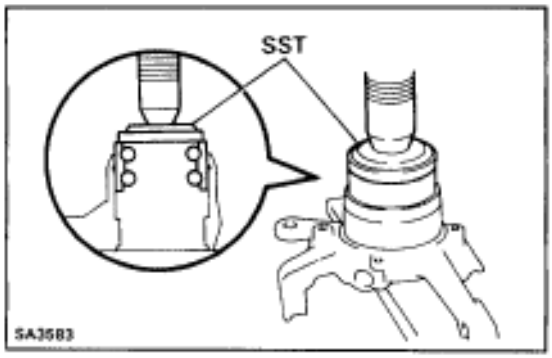

1. INSTALL BEARING TO STEERING KNUCKLE

(a) Using SST, install a new bearing.
SST 09608–35014 (09608–06200)
NOTICE: If the inner race and balls come loose from the bearing outer race, be sure to install them on the same side as before.
(b) Using snap ring pliers, install the snap ring.

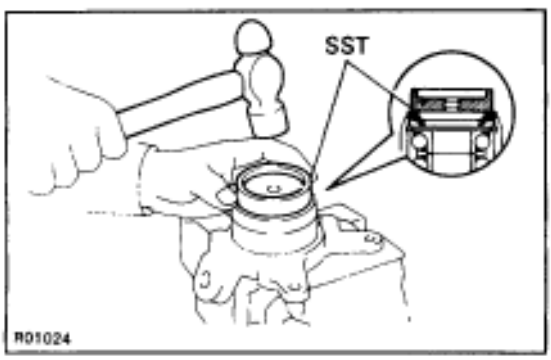

2. INSTALL OIL SEAL

(a) Install the inner race (outside).
(b) Using SST and a hammer, tap in a new oil seal until it is flush with the end surface of the steering knuckle.
SST 09608–32010
(c) Coat MP grease to the oil seal lip.

3. INSTALL AXLE HUB TO STEERING KNUCKLE

(a) Install the brake dust cover to the steering knuckle with the 4 bolts.
Torque: 8 N·m (85 kgf·cm, 74 in·lbf)

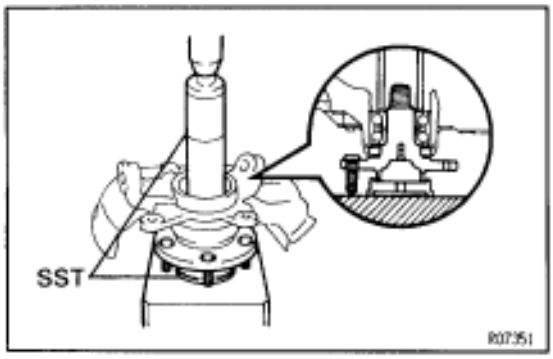

(b) Using SST and a press, press the axle hub to steering knuckle.
SST 09608–32010, 09608–35014 (09608–06040)

4. INSTALL ABS SPEED SENSOR ROTOR ON AXLE SHAFT
NOTICE: Do not scratch the serrations of the sensor rotor.

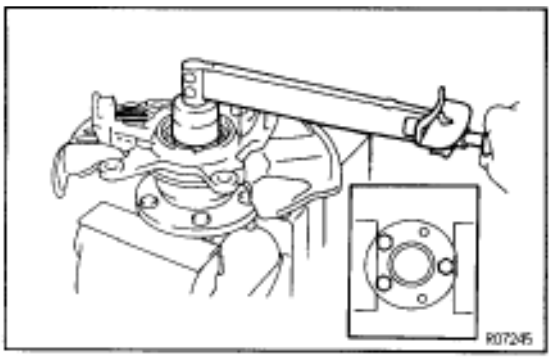

5. INSTALL AXLE HUB LOCK NUT

(a) Install and torque a new axle hub lock nut.
Torque: 199 N·m (2,030 kgf·cm, 147 ft·lbf)

(b) Using a chisel and hammer, stake the lock nut.

6. INSTALL HUB GREASE CAP
Using a screwdriver and hammer, install the hub grease cap to the steering knuckle.

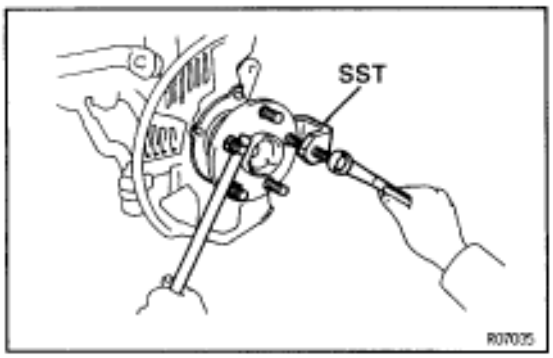

FRONT WHEEL HUB BOLT REPLACEMENT

1. REMOVE FRONT WHEEL

2. REMOVE FRONT BRAKE CALIPER AND DISC
(See page SA–16)

3. REMOVE HUB BOLT
Using SST, remove the hub bolt.
SST 09628–10011

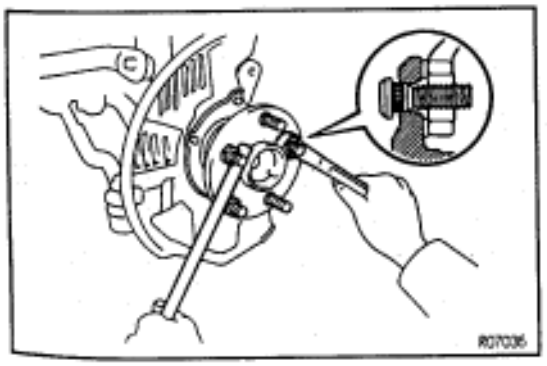

4. INSTALL HUB BOLT

(a) Install washer and nut to a new hub bolt, as shown in the illustration.

(b) Turn the wheel nut to pull the hub bolt through until the underside of the hub bolt head touches the axle hub.

5. INSTALL FRONT BRAKE DISC AND CALIPER
(See page SA–16)

6. INSTALL FRONT WHEEL
Torque: 103 N·m (1,050 kgf·cm, 76 ft·lbf)

FRONT SUSPENSION

PREPARATION

SST (SPECIAL SERVICE TOOLS)

	09628–62011 Ball Joint Puller	
	09710–14012 Rear Suspension Bushing Tool Set	Shock absorber bushing replacement
	(09710–00020) Pipe	
	09727–30020 Coil Spring Compressor	

RECOMMENDED TOOLS

	09025–00010 Torque Wrench (30 kgf·cm)	

EQUIPMENT

Torque wrench	

FRONT SHOCK ABSORBER COMPONENTS

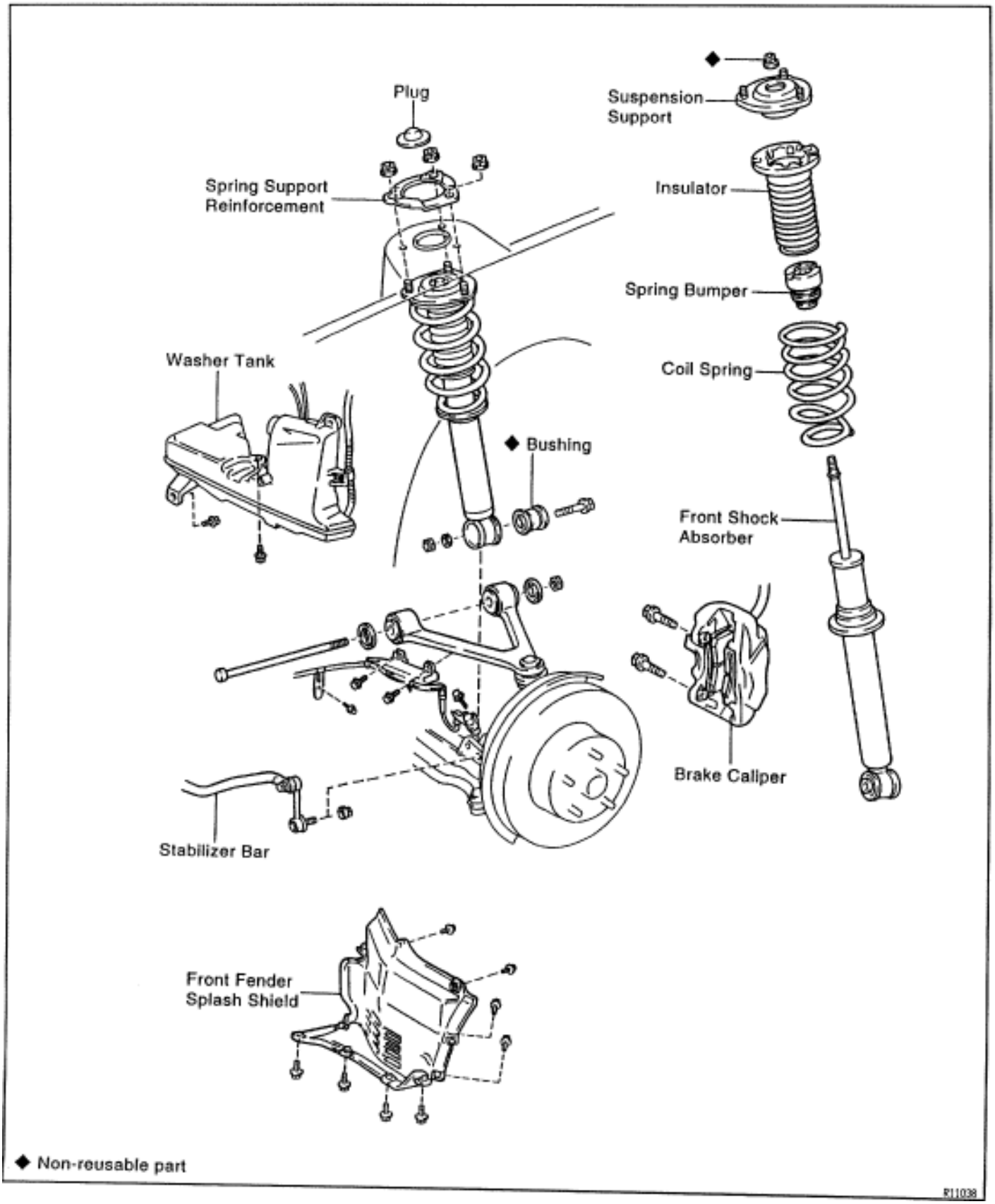

FRONT SHOCK ABSORBER REMOVAL

Installation is in the reverse order of removal.

INSTALLATION HINT: After installation, check ABS speed sensor signal and front wheel alignment.

(See page BR–62 and SA–4)

1. REMOVE FRONT WHEEL

Torque: 103 N·m (1,050 kgf·cm, 76 ft·lbf)



2. REMOVE DISC BRAKE CALIPER

(a) Remove the 2 bolts and brake caliper from the steering knuckle.

Torque: 118 N·m (1,200 kgf·cm, 87 ft·lbf)

(b) Support the brake caliper securely.

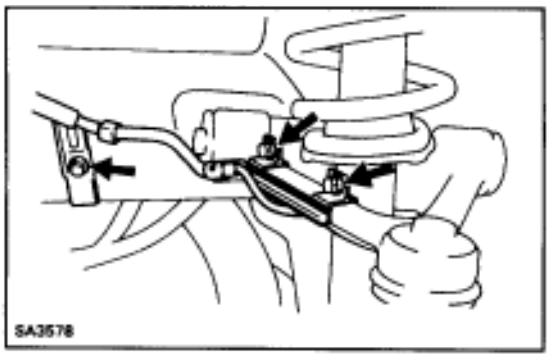

3. DISCONNECT ABS SPEED SENSOR AND WIRE HARNESS

(a) Remove the bolt and disconnect the speed sensor from the steering knuckle.

Torque: 8 N·m (80 kgf·cm, 69 in.·lbf)

(b) Remove the 3 bolts and disconnect the wire harness clamp to prevent the wire harness being damaged when removing or installing the through bolt.

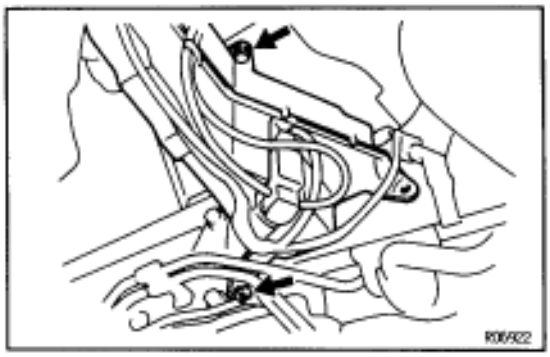

4. REMOVE FRONT FENDER SPLASH SHIELD

5. LH side only.

MOVE WASHER TANK

(a) Remove the 2 washer tank set bolts.

(b) Move the washer tank from the body.

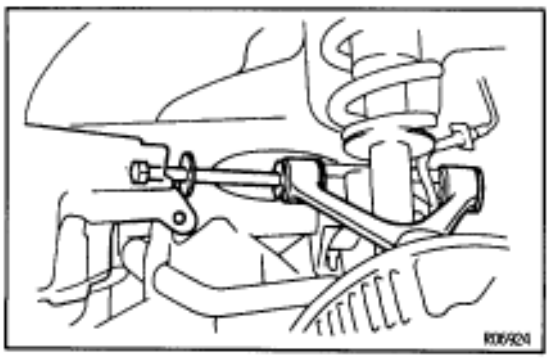

6. DISCONNECT UPPER SUSPENSION ARM

(a) Remove the bolt and nut and disconnect the upper suspension arm from the subframe.

Torque: 164 N·m (1,670 kgf·cm, 121 ft·lbf)

INSTALLATION HINT: After stabilizing the suspension, torque the nut.

(b) Support the upper suspension arm securely.

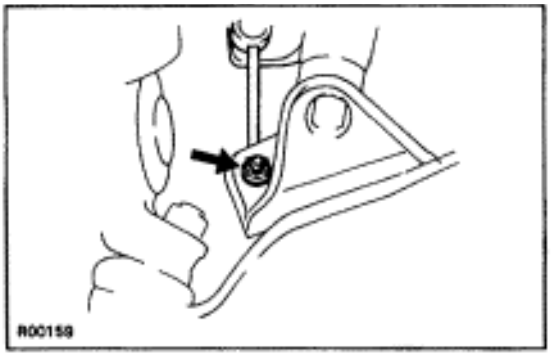

7. DISCONNECT STABILIZER BAR LINK

Remove the nut and disconnect the stabilizer link.

Torque: 74 N·m (750 kgf·cm, 54 ft·lbf)

HINT: If the ball joint stud turns together with the nut, use a hexagon wrench to hold the stud.

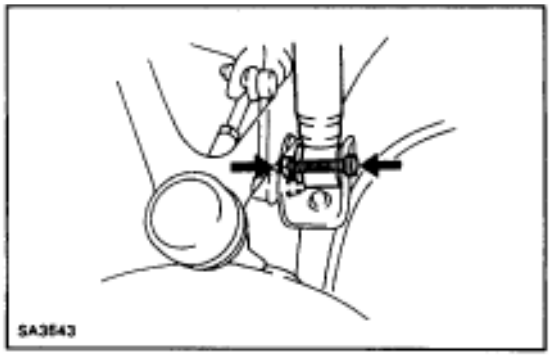

8. REMOVE SHOCK ABSORBER

(a) Remove the bolt and nut and disconnect the shock absorber from the lower suspension arm.

Torque: 143 N·m (1,460 kgf·cm, 106 ft·lbf)

INSTALLATION HINT: After stabilizing the suspension torque the nut.

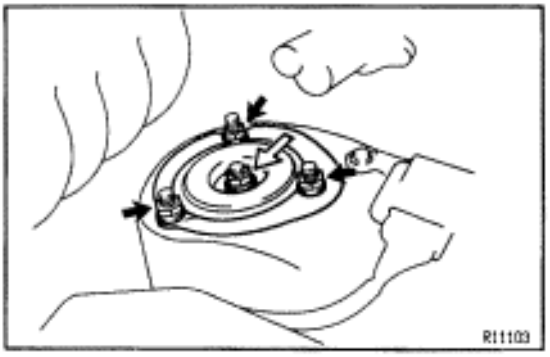

(b) Remove the plug from the support.

(c) Loosen the lock nut in the middle of the suspension support.

REMOVAL NOTICE: Do not remove the nut.

Torque: 29 N·m (300 kgf·cm, 22 ft·lbf)

(d) Remove the 3 nuts, spring support reinforcement and shock absorber from the body.

Torque: 35 N·m (360 kgf·cm, 26 ft·lbf)

FRONT SHOCK ABSORBER DISASSEMBLY

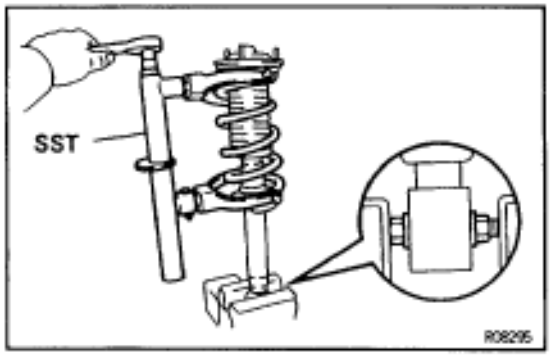

1. REMOVE SUSPENSION SUPPORT AND COIL SPRING

(a) Using SST, compress the coil spring.

SST 09727–30020

NOTICE: Do not use an inpact wrench. It will damage the SST.

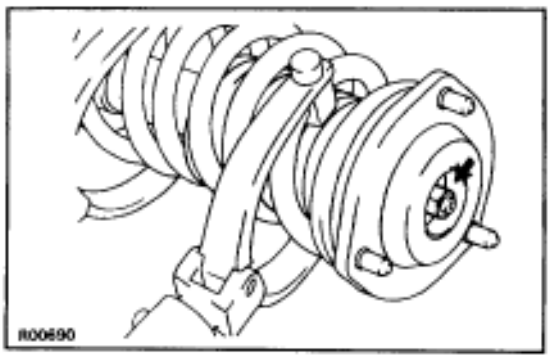

(b) Remove the suspension support center nut.

(c) Remove the suspension support, coil spring and spring bumper.

2. REMOVE INSULATOR FROM SUSPENSION SUPPORT

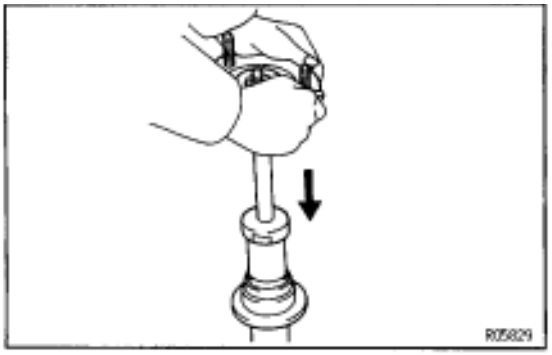

FRONT SHOCK ABSORBER INSPECTION

INSPECT SHOCK ABSORBER

Compress and extend the shock absorber rod and check that there is no abnormal resistance or unusual operation sounds.

If there is any abnormality, replace the shock absorber with a new one.

NOTICE: When discarding the shock absorber, use the following procedure.

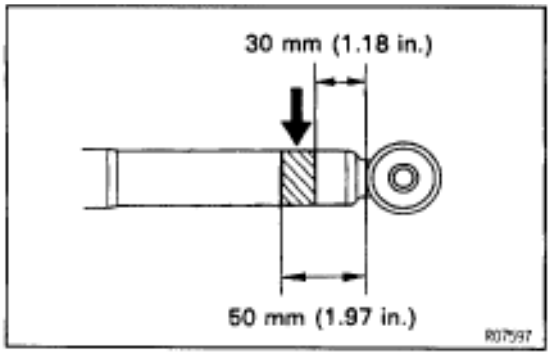

FRONT SHOCK ABSORBER DISPOSAL

1. **FULLY EXTEND SHOCK ABSORBER ROD**
2. **DRILL HOLE TO REMOVE GAS FROM CYLINDER**

Using a drill, make a hole in the cylinder within the shaded region to remove the gas inside.

CAUTION: The gas coming out is harmless, but be careful of chips which may fly up when drilling.

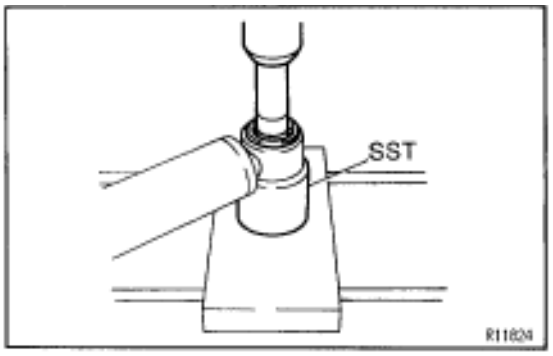

SHOCK ABSORBER BUSHING REPLACEMENT

1. **REMOVE BUSHING**

Using SST and a deep socket wrench, press out the bushing.

SST 09710–14012 (09710–00020)

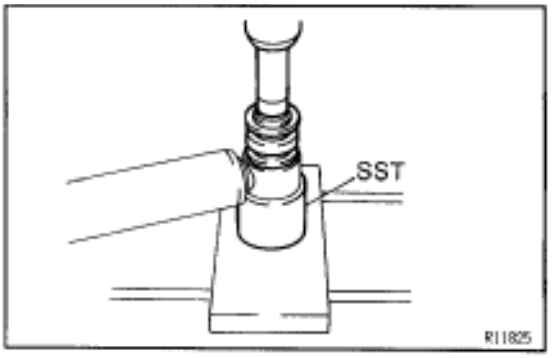

2. **INSTALL NEW BUSHING**

Using SST and a deep socket wrench, press in a new bushing.

SST 09710–14012 (09710–00020)

HINT: Do not apply grease or oil to the bushing.

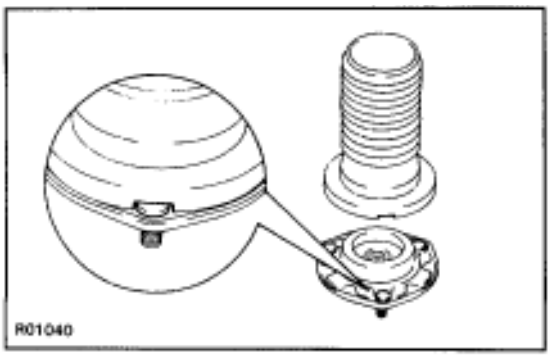

FRONT SHOCK ABSORBER ASSEMBLY

1. **INSTALL INSULATOR TO SUSPENSION SUPPORT**

HINT: Match the bolt of the suspension support with the cut–out part of the insulator.

2. **INSTALL SPRING BUMPER TO SHOCK ABSORBER**

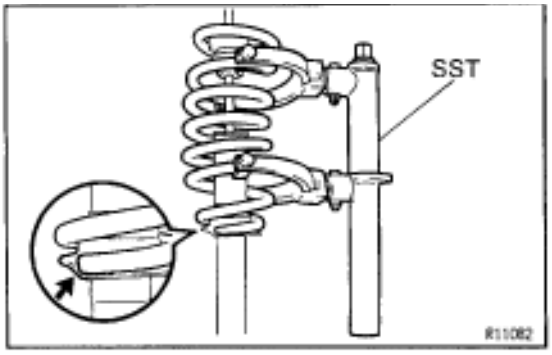

3. INSTALL COIL SPRING TO SHOCK ABSORBER

(a) Using SST, compress the coil spring.
SST 09727–30020
NOTICE: Do not use an impact wrench. It will damage the SST.

(b) Install the coil spring to the shock absorber.
HINT: Fit the lower end of the coil spring into the gap of the spring seat of the shock absorber.

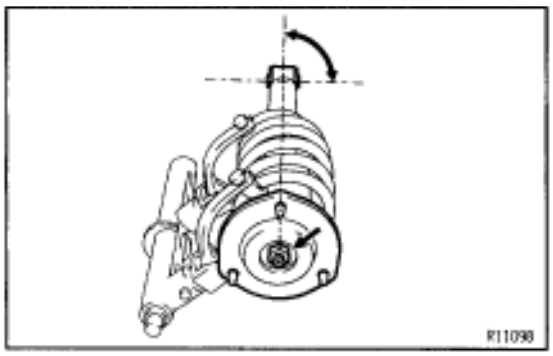

4. INSTALL SUSPENSION SUPPORT

(a) Install the suspension support to the rod.

(b) Temporarily tighten a new nut.

(c) Turn the suspension support so that one of the bolts on the suspension support faces the same direction, as shown in the illustration.
HINT: Align the bolt so that a line drawn between the rod and the bolt would be 90° to the direction of the lower bushing.

(d) Remove the SST.
HINT: After removing the SST, again check the direction of the suspension support.

UPPER SUSPENSION ARM COMPONENTS

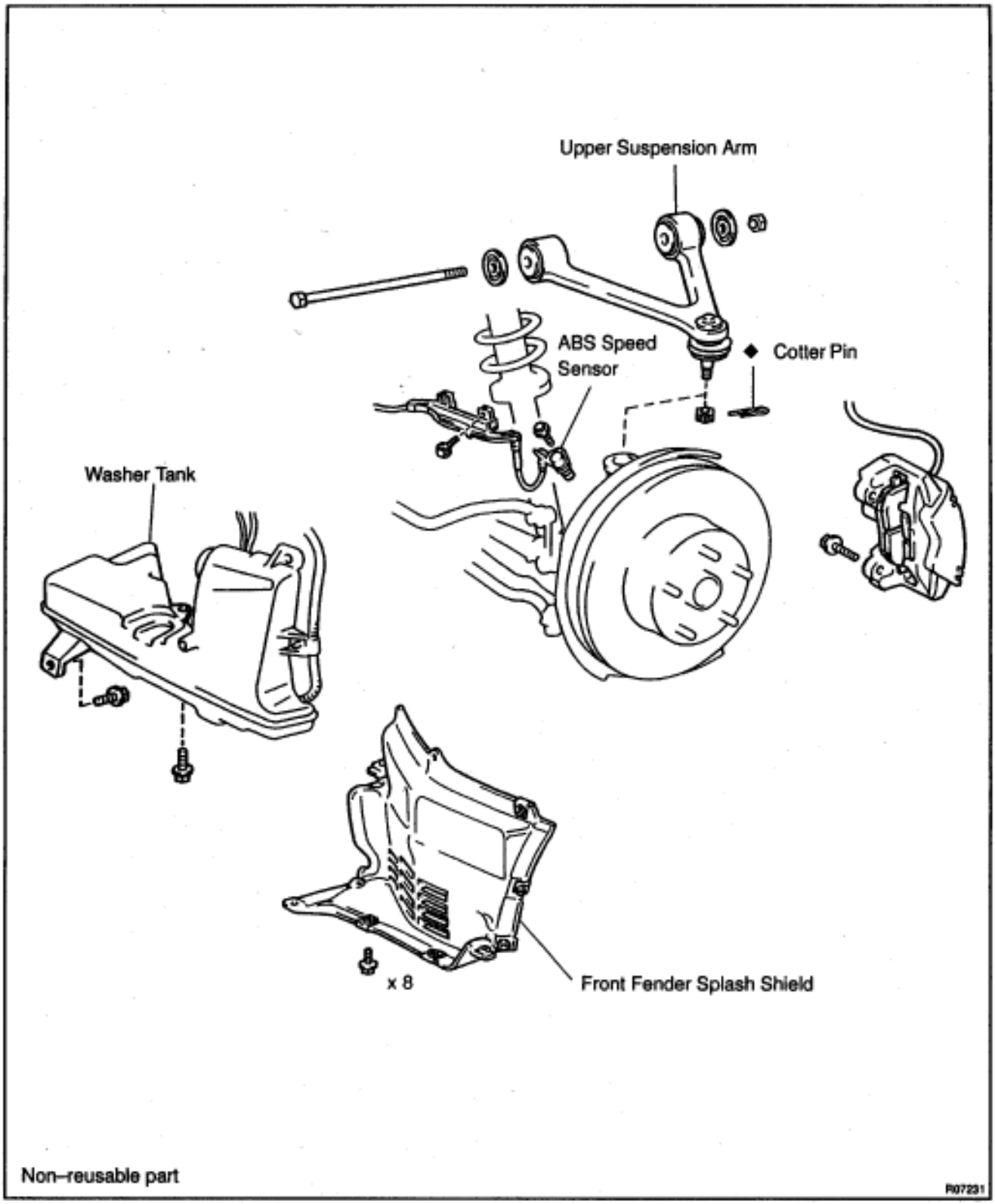

CORRECTION TO PUB.NO. RM408U2

UPPER SUSPENSION ARM REMOVAL

Installation is in the reverse order of removal.

INSTALLATION HINT: After installation, check ABS speed sensor signal and front wheel alignment.

(See page BR–62 and SA–4)

1. REMOVE FRONT WHEEL

Torque: 103 N·m (1,050 kgf·cm, 76 ft·lbf)



2. REMOVE DISC BRAKE CALIPER

(a) Remove the 2 bolts and brake caliper from the steering knuckle.

Torque: 118 N·m (1,200 kgf·cm, 87 ft·lbf)

(b) Support the brake caliper securely.

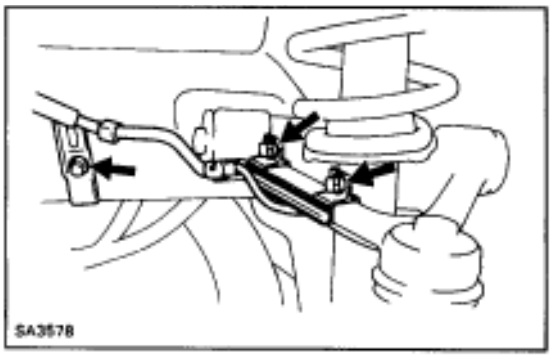

3. DISCONNECT ABS SPEED SENSOR AND WIRE HARNESS CLAMP

(a) Remove the bolt and disconnect the speed sensor from the steering knuckle.

Torque: 8 N·m (80 kgf·cm, 69 in.·lbf)

(b) Remove the 3 bolts and wire harness clamp to prevent the wire harness being damaged when removing or installing the through bolt.

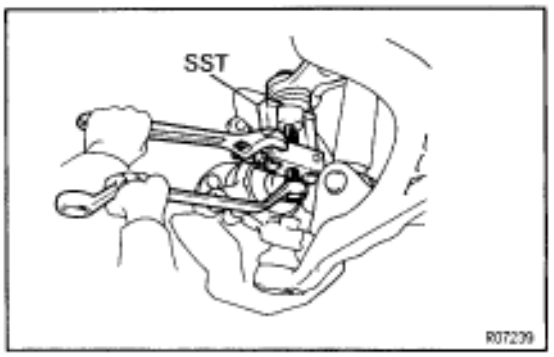

4. DISCONNECT UPPER SUSPENSION ARM

(a) Remove the cotter pin and the nut.

Torque: 103 N·m (1,050 kgf·cm, 76 ft·lbf)

(b) Using SST, disconnect the upper suspension arm from the steering knuckle.

SST 09628–62011

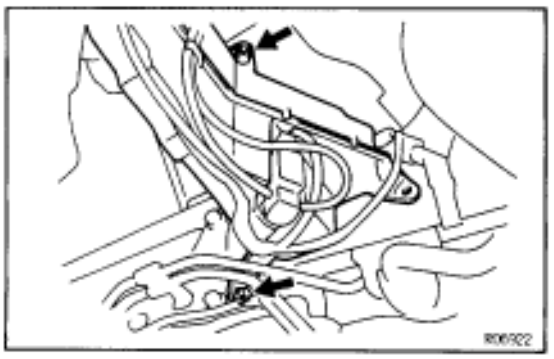

5. REMOVE FRONT FENDER SPLASH SHIELD

6. LH side only:
MOVE WASHER TANK

(a) Remove the 2 washer tank set bolts.

(b) Move the washer tank away from the body.

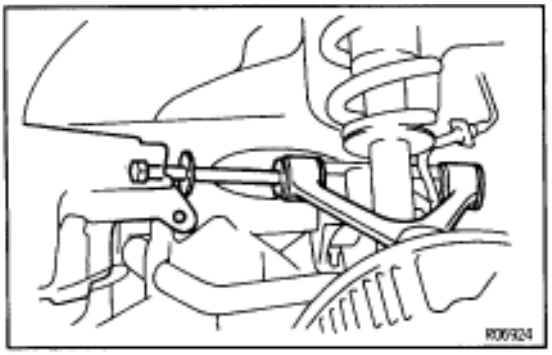

7. REMOVE UPPER SUSPENSION ARM

(a) Remove the bolt and nut.

Torque: 164 N·m (1,670 kgf·cm, 121 ft·lbf)

INSTALLATION HINT: After stabilizing the suspension torque the nut.

(b) Remove the upper suspension arm.

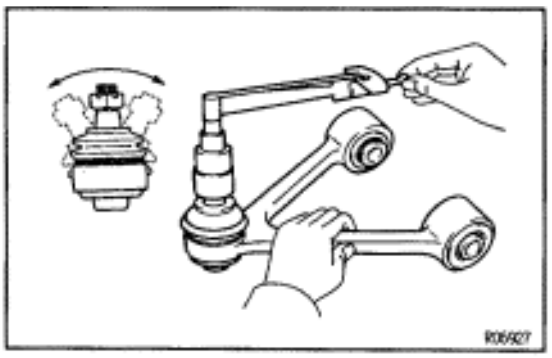

UPPER BALL JOINT INSPECTION

INSPECT BALL JOINT FOR ROTATION CONDITION

(a) As shown, flip the ball joint stud back and forth 5 times before installing the nut.

(b) Using a torque wrench, turn the nut continuously one turn every 2–4 seconds and take the torque reading on the 5th turn.

Torque (turning):

1.0–3.4 N·m (10–35 kgf·cm, 9–30 in.·lbf)

If not within specification, replace the upper suspension arm.

LOWER SUSPENSION ARM COMPONENTS

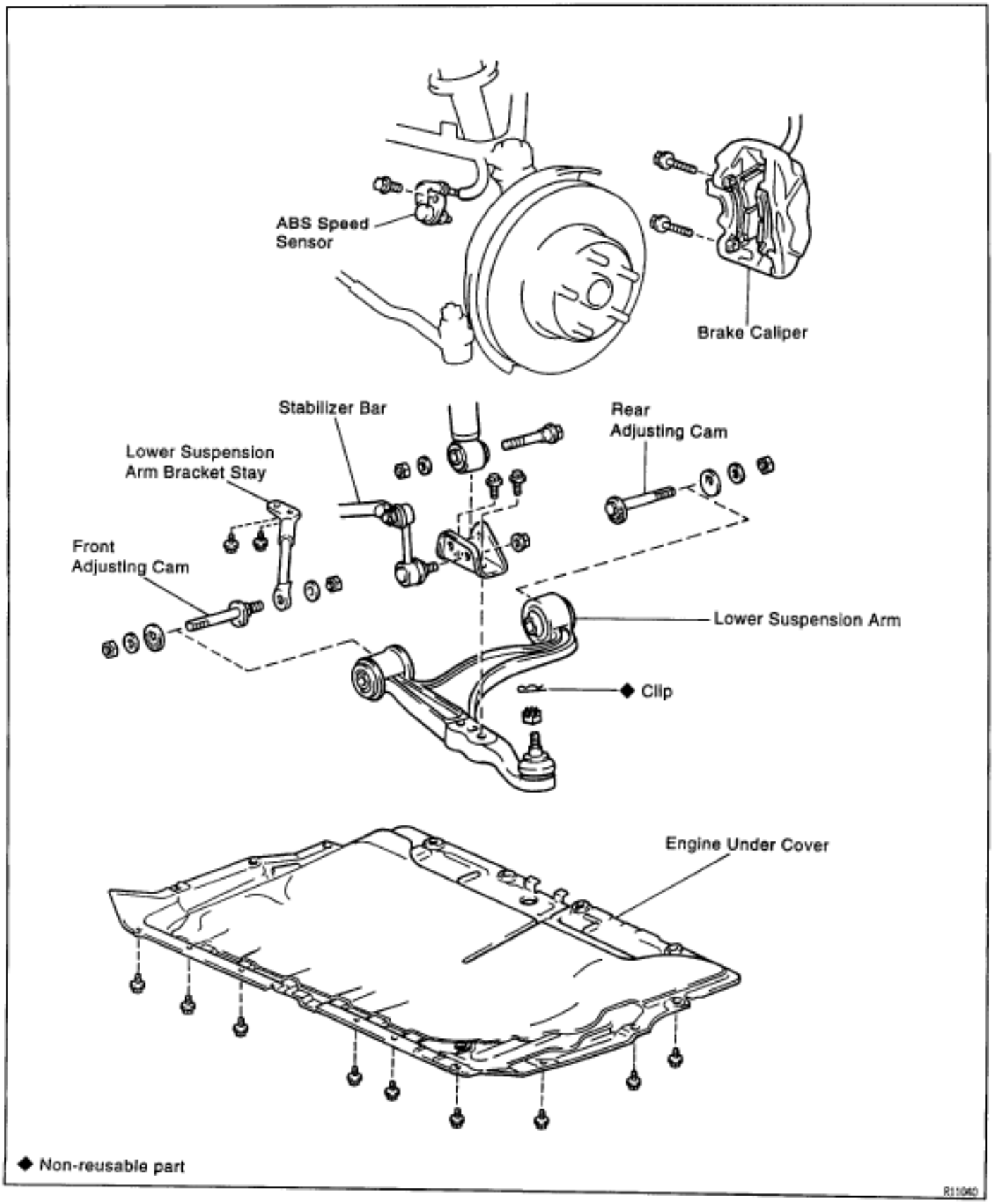

LOWER SUSPENSION ARM REMOVAL

Installation is in the reverse order of removal.

INSTALLATION HINT: After installation, check front wheel alignment.

(See page SA–4)

1. **REMOVE FRONT WHEEL**

   Torque: 103 N·m (1,050 kgf·cm, 76 ft·lbf)

2. **REMOVE ENGINE UNDER COVER**



3. **REMOVE BRAKE CALIPER**

(a) Remove the 2 bolts and brake caliper from the steering knuckle.

Torque: 118 N·m (1,200 kgf·cm, 87 ft·lbf)

(b) Support the brake caliper securely.

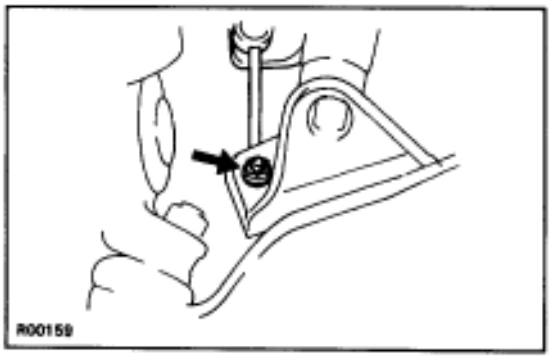

4. **DISCONNECT STABILIZER BAR LINK FROM LOWER SUSPENSION ARM**

Remove the nut and disconnect the link from the arm.

Torque: 74 N·m (750 kgf·cm, 54 ft·lbf)

HINT: If the ball joint stud turns together with the nut, use a hexagon wrench to hold the stud.

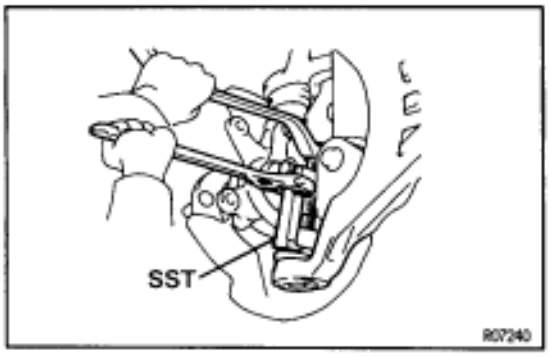

5. **DISCONNECT STEERING KNUCKLE**

(a) Remove the clip and nut.

Torque: 125 N·m (1,270 kgf·cm, 92 ft·lbf)

(b) Using SST, disconnect the steering knuckle from the lower suspension arm.

SST 09628–62011

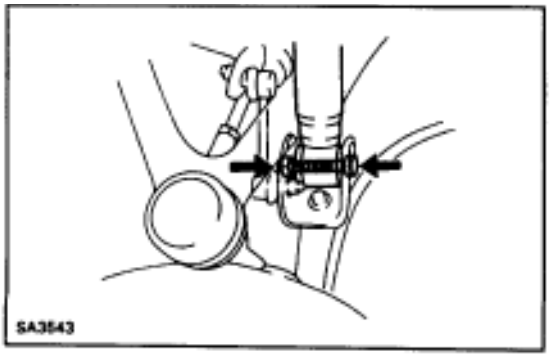

6. **REMOVE LOWER SUSPENSION ARM**

(a) Remove the bolt, nut and disconnect the lower suspension arm from the shock absorber.

Torque: 143 N·m (1,460 kgf·cm, 106 ft·lbf)

INSTALLATION HINT: After stabilizing the suspension, torque the nut.

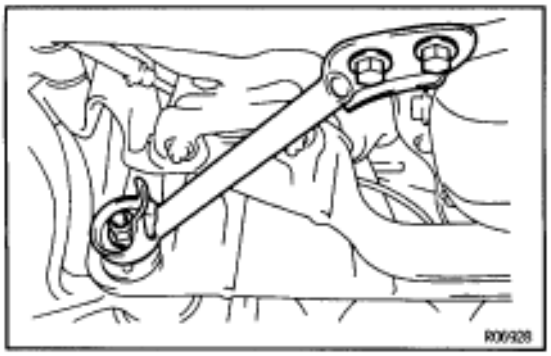

(b) Remove the nut, 2 bolts and the front lower arm bracket stay.
Torque:
Bolt: 44 N·m (450 kgf·cm, 33 ft·lbf)
Nut: 59 N·m (600 kgf·cm, 43 ft·lbf)
INSTALLATION HINT: Before installing the lower arm bracket stay, adjust front wheel alignment.

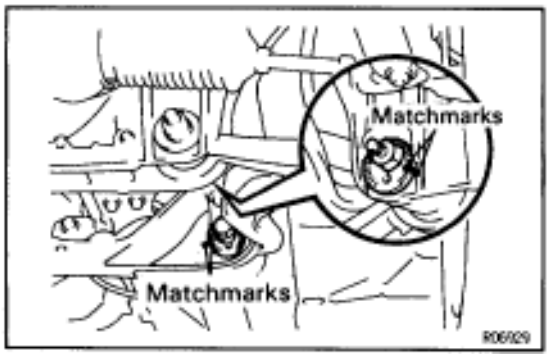

(c) Before loosening the adjusting cam, place matchmarks on the front and rear adjusting cams and subframe.



(d) Remove the nuts, adjusting cams and lower suspension arm.
Torque: 226 N·m (2,300 kgf·cm, 166 ft·lbf)
INSTALLATION HINT: After stabilizing the suspension, torque the nuts.

7. REMOVE SHOCK ABSORBER BRACKET FROM LOWER SUSPENSION ARM
Remove the 2 bolts and bracket from the lower arm.
Torque: 52 N·m (530 kgf·cm, 38 ft·lbf)

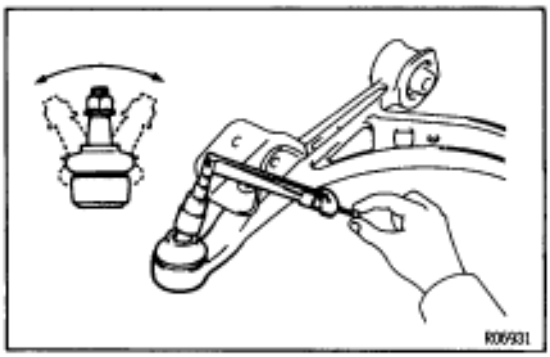

LOWER BALL JOINT INSPECTION

INSPECT BALL JOINT FOR ROTATION CONDITION

(a) As shown, flip the ball joint stud back and forth 5 times before installing the nut.

(b) Using torque wrench, turn the nut continuously one turn every 2–4 seconds and take the torque reading on the 5th turn.
Torque (turning):
1.0–3.4 N·m (10–35 kgf·cm, 9–30 in.·lbf)
If not within specification, replace the lower suspension arm.

STABILIZER BAR COMPONENTS

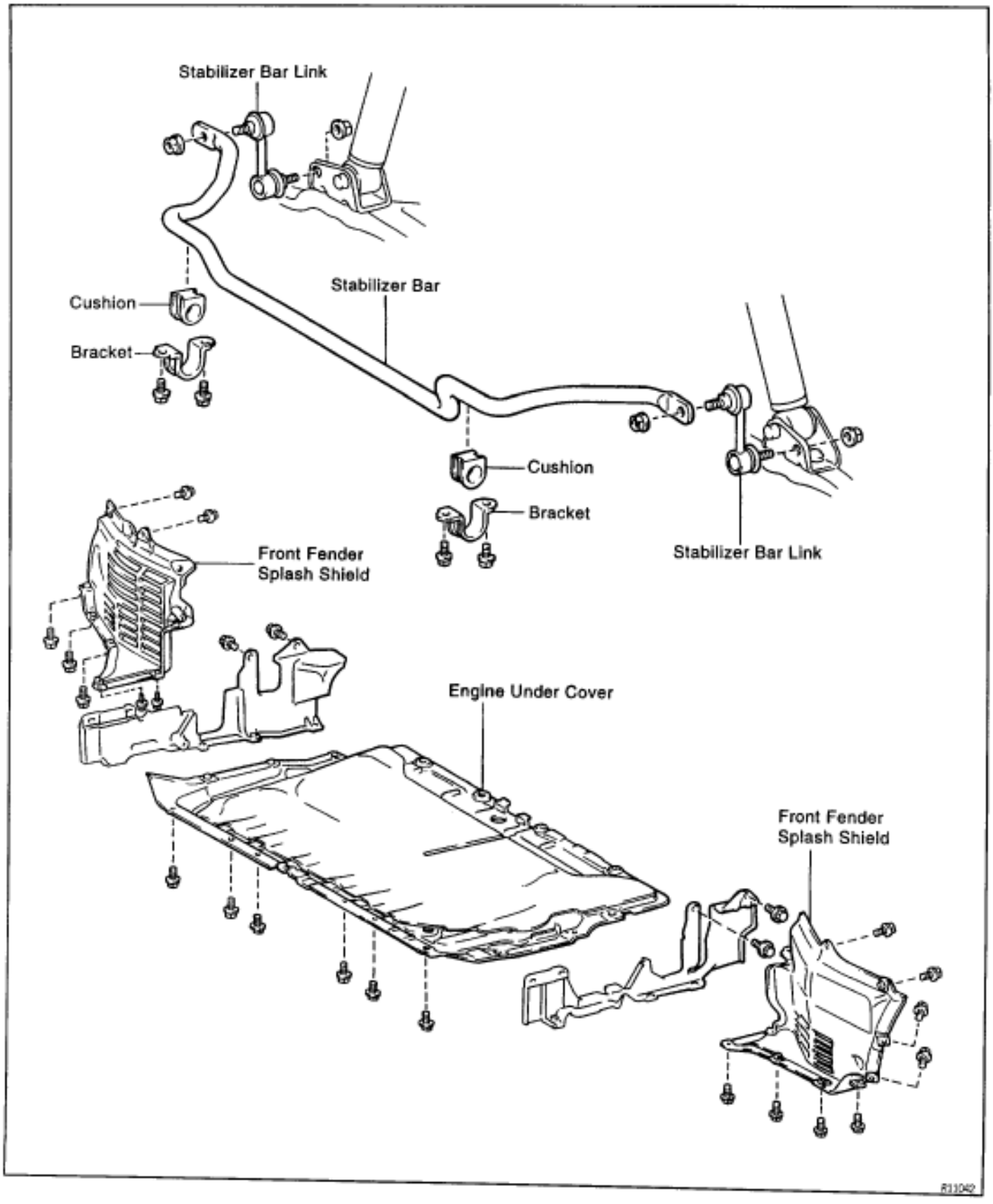

STABILIZER BAR AND LINK REMOVAL

Installation is in the reverse order of removal.

1. **REMOVE FRONT WHEELS**
   Torque: 103 N·m (1,050 kgf·cm, 76 ft·lbf)
2. **REMOVE ENGINE UNDER COVER**

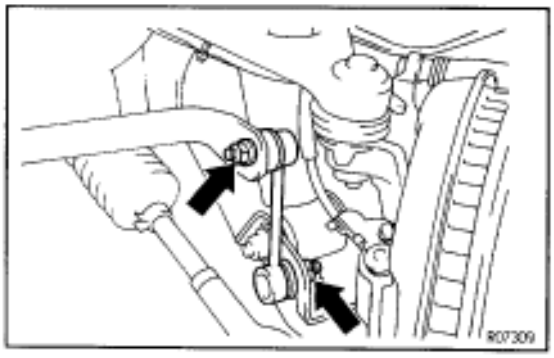

3. **REMOVE BOTH STABILIZER BAR LINKS**
   Remove the nuts and stabilizer bar links from the stabilizer bar and the lower suspension arm.
   Torque: 74 N·m (750 kgf·cm, 54 ft·lbf)
   HINT: If the ball joint stud turns together with the nut, use a hexagon wrench to hold the stud.

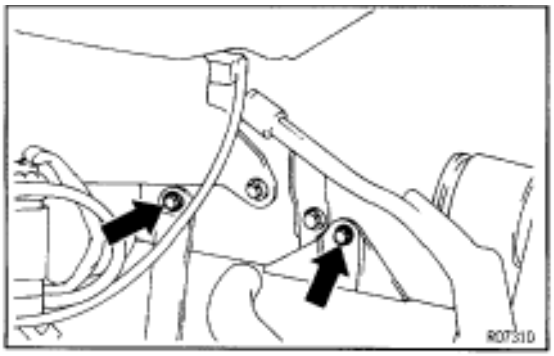

4. **REMOVE STABILIZER BAR**
   (a) Remove the left and right apron seal set bolts.

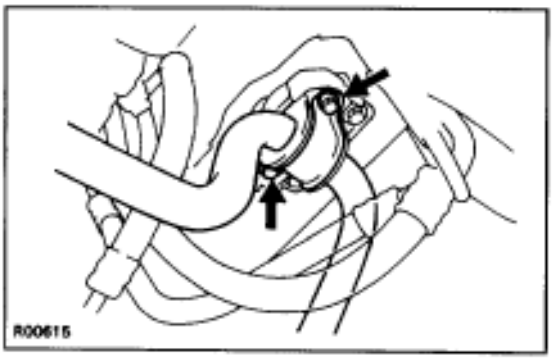

   (b) Remove the 4 bracket bolts and the stabilizer bar with the cushions and brackets.
   Torque: 18 N·m (180 kgf·cm, 13 ft·lbf)

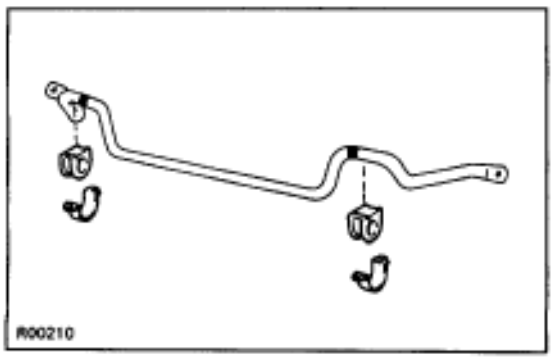

5. **REMOVE CUSHIONS AND BRACKETS**
   INSTALLATION HINT: Install the cushion to the outside of the line.

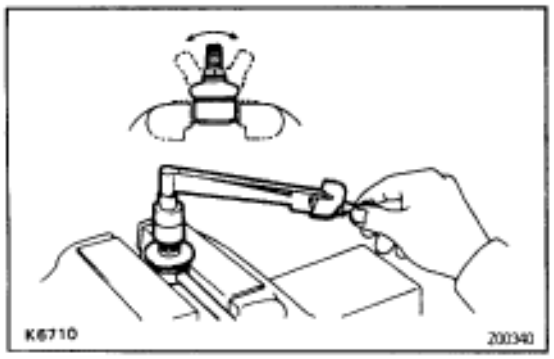

STABILIZER BAR LINK INSPECTION

INSPECT BALL JOINT FOR ROTATION CONDITION

(a) As shown, flip the ball joint stud back and forth 5 times before installing the nut.

(b) Using a torque wrench, turn the stud continuously one turn every 2–4 seconds and take the torque reading on the 5th turn.

Torque (turning):

0.05–1.0 N·m (0.5–10 kgf·cm, 0.4–8.7 in.·lbf)

If not within specification, replace the stabilizer bar link.

REAR AXLE HUB

PREPARATION

SST (SPECIAL SERVICE TOOLS)

	09223–15030	Oil Seal & Bearing Replacer	Oil seal (inner) installation
	09308–00010	Oil Seal Puller	Oil seal removal
	09520–00031	Rear Axle Shaft Puller	
	09527–17011	Rear Axle Shaft Bearing Remover	Axle bearing installation
	09608–12010	Front Hub & Drive Pinion Bearing Replacer Set	
	(09608–00020)	Remover & Replacer Handle	
	(09608–00060)	Drive Pinion Front Bearing Cup Replacer	
	(09608–00080)	Replacer	
	09608–32010	Steering Knuckle Oil Seal Replacer	
	09608–35014	Axle Hub & Drive Pinion Bearing Tool Set	
	(09608–06020)	Handle	
	(09608–06160	Rear Hub Inner Bearing Cup Replacer	Dust deflector installation

	09610–20012	Pitman Arm Puller	
	09628–10011	Ball Joint Puller	Hub bolt removal
	09628–62011	Ball Joint Puller	
	09950–40010	Puller B Set	Axle bearing inner race (outside) removal

RECOMMENDED TOOLS

	09905–00013	Snap Ring Pliers	Rear axle hub bearing

EQUIPMENT

Dial indicator	
Torque wrench	

REAR AXLE HUB COMPONENTS

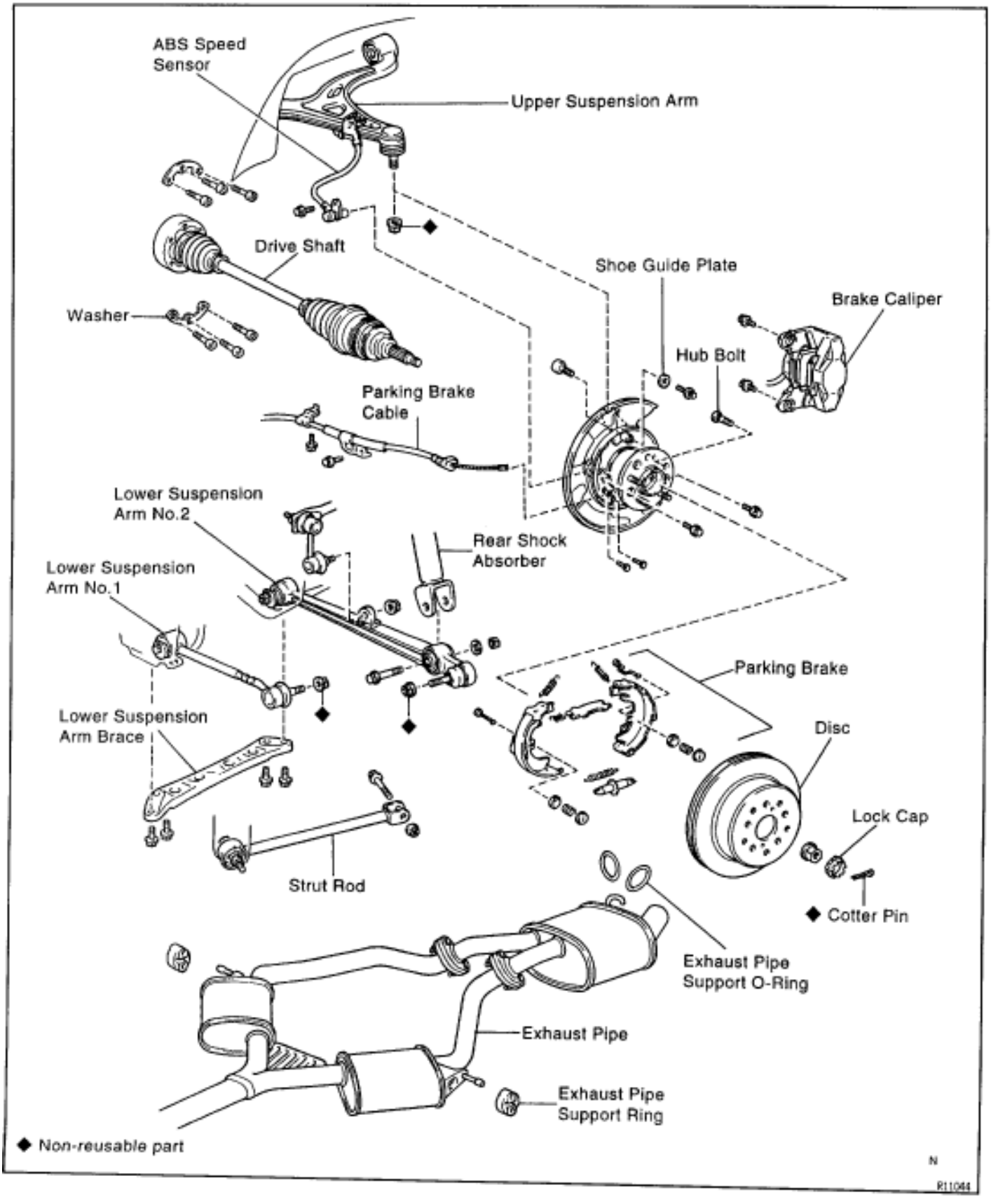

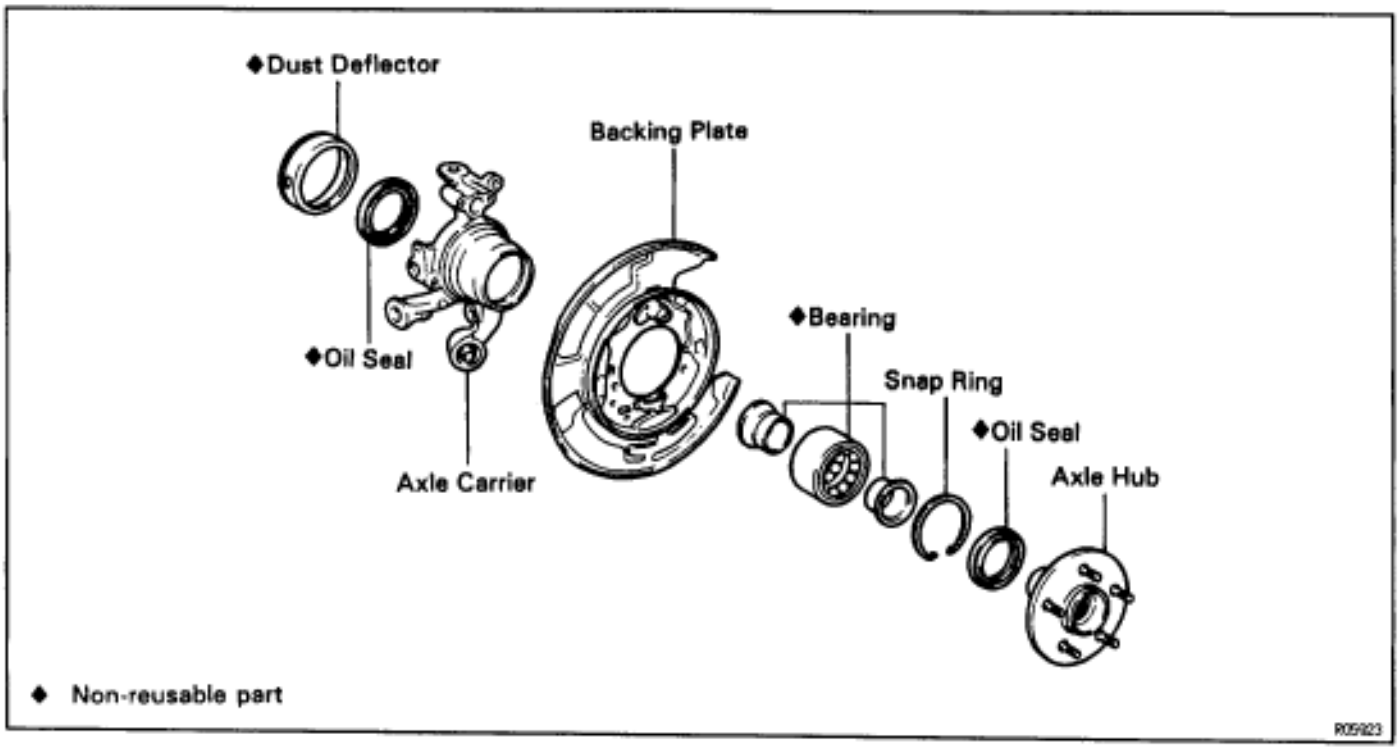

REAR AXLE CARRIER REMOVAL

Installation is in the reverse order of removal.

INSTALLATION HINT: After installation, check ABS speed sensor signal and rear wheel alignment.

(See page BR–64 and SA–9)

1. REMOVE REAR WHEEL

Torque: 103 N·m (1,050 kgf·cm, 76 ft·lbf)

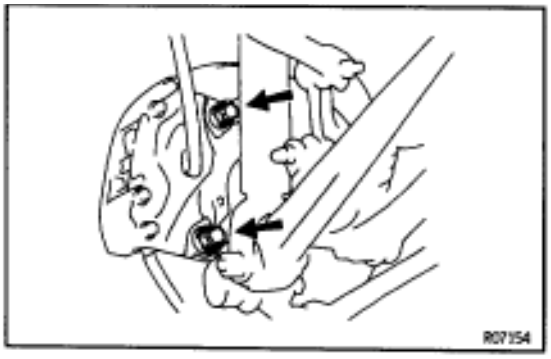

2. REMOVE REAR BRAKE CALIPER AND DISC

(a) Remove the 2 bolts and brake caliper from the rear axle hub.

Torque: 104 N·m (1,065 kgf·cm, 77 ft·lbf)

(b) Support the brake caliper securely.

(c) Place matchmarks on the disc and axle hub.

(d) Remove the disc.

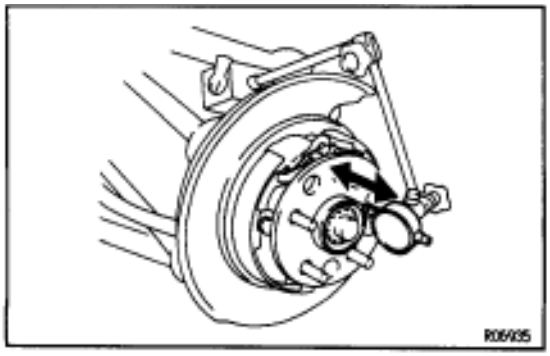

3. CHECK BACKLASH IN BEARING SHAFT DIRECTION

Place the dial indicator near the center of the axle hub and check the backlash in the bearing shaft direction.

Maximum:

0.05 mm (0.0020 in.)

If greater than the specified maximum, replace the bearing.

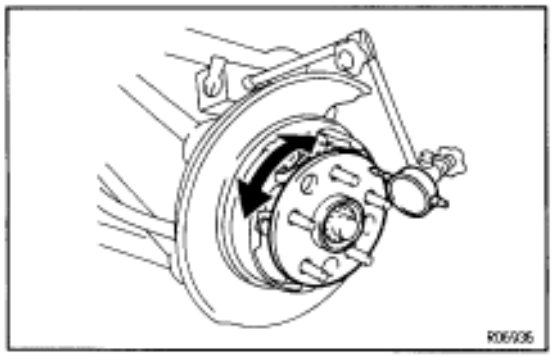

4. CHECK AXLE HUB DEVIATION

Using a dial indicator, check the deviation at the surface of the axle hub outside the hub bolt.

Maximum:

0.05 mm (0.0020 in.)

If greater than the specified maximum, replace the axle hub.

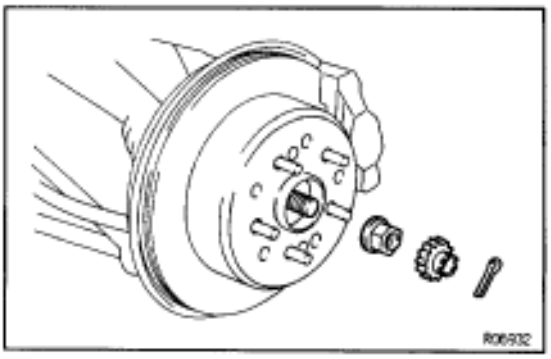

5. REMOVE DRIVE SHAFT LOCK NUT

(a) Install the disc and brake caliper.

(b) Remove the cotter pin and lock cap.

(c) While depressing the brake pedal, remove the nut.

Torque: 289 N·m (2,950 kgf·cm, 213 ft·lbf)

(d) Remove the brake caliper and disc.

6. REMOVE DRIVE SHAFT

(See page SA–46)

7. REMOVE PARKING BRAKE SHOE

(See page BR–35)

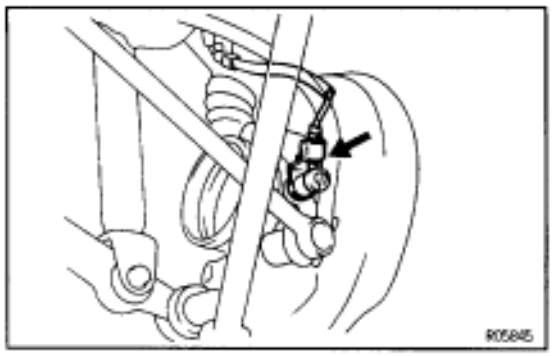

8. DISCONNECT ABS SPEED SENSOR

Remove the bolt and disconnect the ABS speed sensor.

Torque: 8 N·m (80 kgf·cm, 69 in.·lbf)

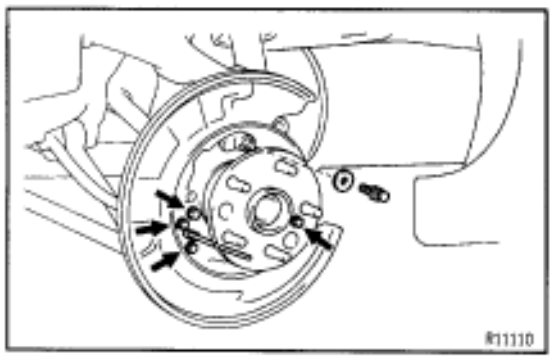

9. DISCONNECT PARKING BRAKE CABLE

(a) Remove the 2 parking brake cable set bolts.

Torque: 8 N·m (80 kgf·cm, 69 in.·lbf)

(b) Remove the 2 backing plate set bolts.

Torque: 26 N·m (260 kgf·cm, 19 ft·lbf)

(c) Remove the bolt and shoe guide plate.

Torque: 18 N·m (185 kgf·cm, 13 ft·lbf)

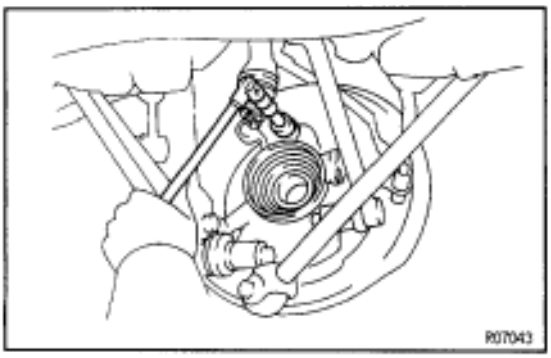

(d) Using a 14 mm hexagon wrench, remove the hexagon bolt.

Torque: 180 N·m (1,825 kgf·cm, 132 ft·lbf)

(e) Slide the backing plate to the outside and disconnect the parking brake cable.

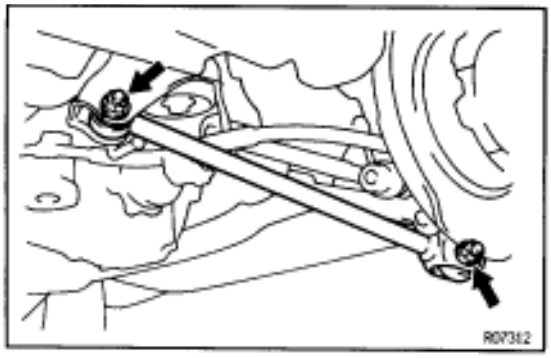

10. REMOVE STRUT ROD

Remove the 2 bolts and nuts.

Torque: 184 N·m (1,880 kgf·cm, 136 ft·lbf)

INSTALLATION HINT: After stabilizing the suspension, torque the bolts.

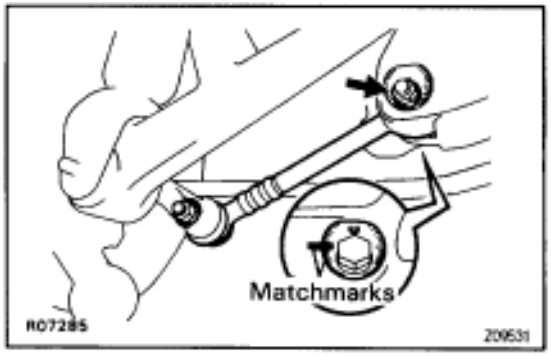

11. DISCONNECT LOWER SUSPENSION ARM NO.1

(a) Remove the bolt and disconnect the parking brake cable bracket.

(b) Place matchmarks on the adjusting cam and subframe.

(c) Remove the nut, adjusting cam and disconnect the lower suspension arm No.1.

Torque: 184 N·m (1,880 kgf·cm, 136 ft·lbf)

INSTALLATION HINT: After stabilizing the suspension, torque the nut.

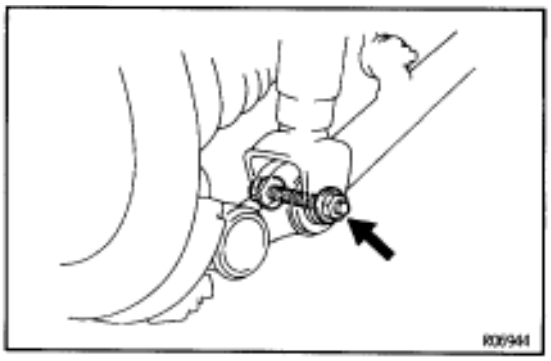

12. DISCONNECT LOWER SUSPENSION ARM NO.2

(a) Remove the bolt, nut and disconnect the shock absorber from the lower suspension arm No.2.

Torque: 137 N·m (1,400 kgf·cm, 101 ft·lbf)

INSTALLATION HINT: After stabilizing the suspension, torque the nut.

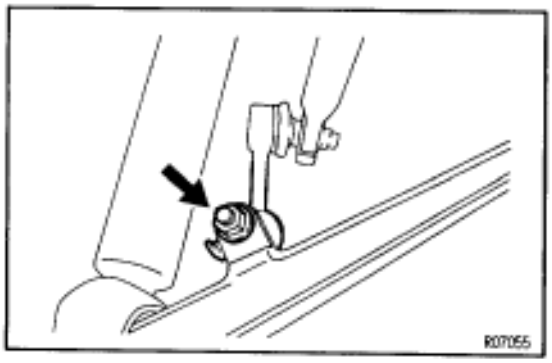

(b) Remove the nut and disconnect the stabilizer bar link from the lower suspension arm No.2.

Torque: 74 N·m (750 kgf·cm, 54 ft·lbf)

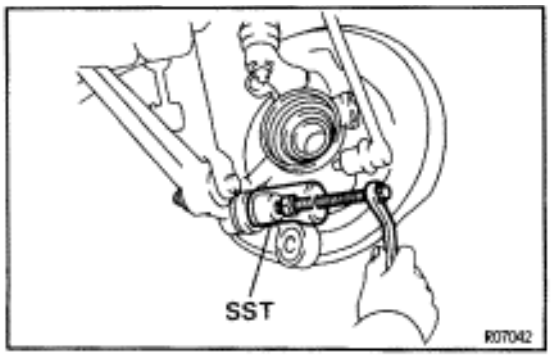

(c) Loosen the nut.

Torque: 150 N·m (1,525 kgf·cm, 110 ft·lbf)

(d) Using SST, disconnect the lower suspension arm No.2 from the axle carrier.

SST 09610–20012

NOTICE: Be careful not to damage the ball joint bolt.

(e) Remove the nut.

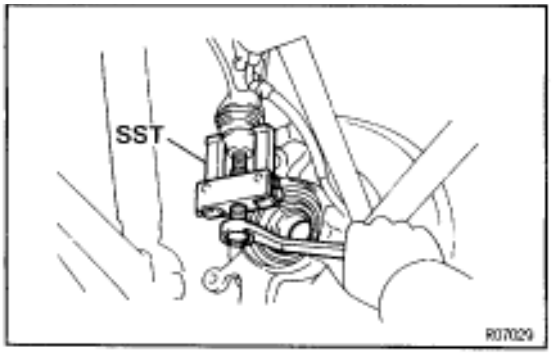

13. REMOVE REAR AXLE CARRIER

(a) Remove the nut.
Torque: 108 N·m (1,100 kgf·cm, 80 ft·lbf)

(b) Using SST, disconnect the upper suspension arm from the axle carrier.
SST 09628–62011
NOTICE: Be careful not to damage the dust boot.

(c) Remove the rear axle carrier.

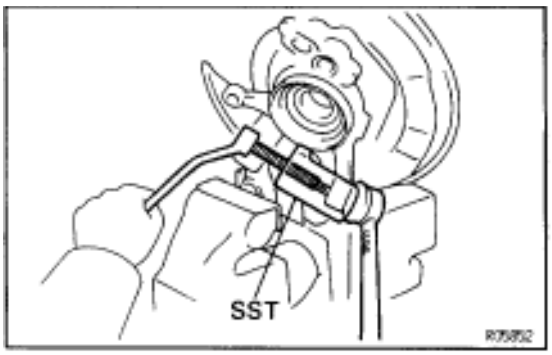

14. REMOVE REAR SUSPENSION ARM NO.1

(a) Remove the nut.
Torque: 59 N·m (600 kgf·cm, 43 ft·lbf)

(b) Using SST, disconnect the lower suspension arm No.1 from the axle carrier.
SST 09610–20012
NOTICE: Be careful not to damage the dust boot.
INSTALLATION HINT: Before install the suspension arm No.1, install the axle carrier to the vehicle.

AXLE HUB DISASSEMBLY

1. REMOVE DUST DEFLECTOR

Using a screwdriver, remove the dust deflector.

2. REMOVE AXLE HUB FROM AXLE CARRIER

(a) Mount the axle carrier in a vise.
HINT: Use a set of soft jaws in the vise to protect the axle carrier.
NOTICE: Do not tighten the vise too tight.

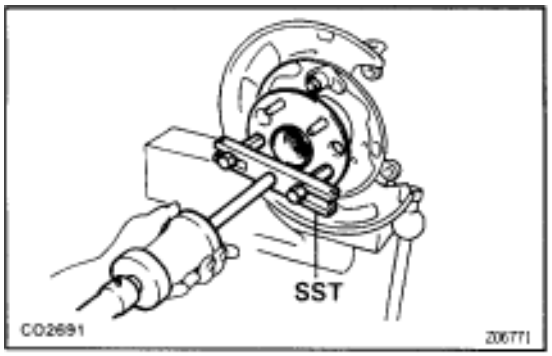

(b) Using SST, remove the axle hub.
SST 09520–00031

(c) Remove the backing plate.

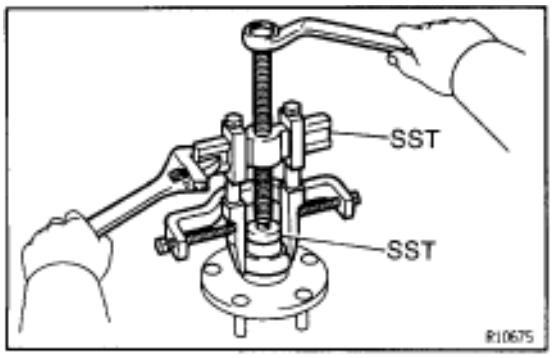

(d) Using SST, remove the outside inner race from the axle hub.
SST 09608–12010 (09608–00080),
09950–40010

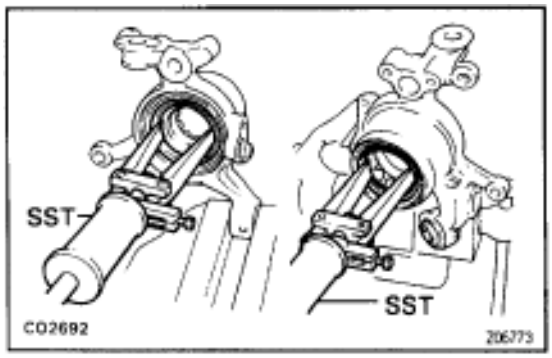

3. REMOVE OIL SEALS

Using SST, remove the inner and outer oil seals.
SST 09308–00010

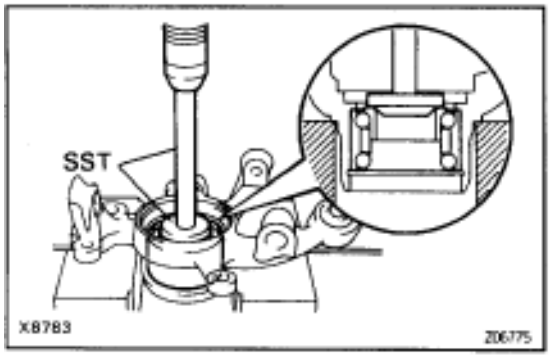

4. REMOVE BEARING

(a) Using snap ring pliers, remove the snap ring.
(b) Place the inner race (inside) to the bearing.
(c) Using SST and a press, remove the bearing.
SST 09608–12010 (09608–00020, 09608–00060)

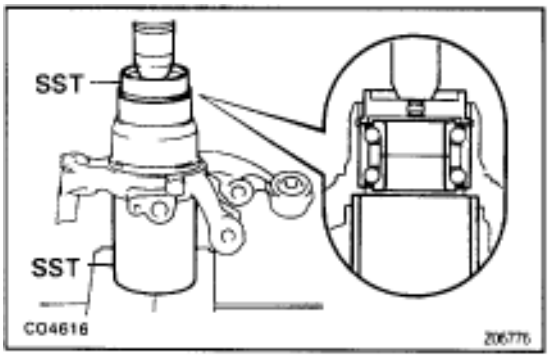

AXLE HUB ASSEMBLY

1. INSTALL NEW BEARING

(a) Using SST, install the bearing to the axle carrier.
SST 09527–17011, 09608–32010
NOTICE: If the inner races come loose from the bearing outer race, be sure to install them on the same side as before.
(b) Using snap ring pliers, install the snap ring.

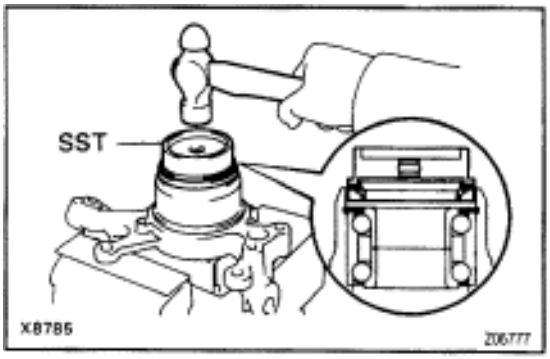

2. INSTALL OIL SEAL (Outer)

(a) Place the inner race (outside).
(b) Using SST and hammer, tap in a new oil seal until it is flush with end surface of the carrier.
SST 09608–32010
NOTICE: Be careful not to damage the oil seal.
(c) Coat MP grease to the oil seal lip.

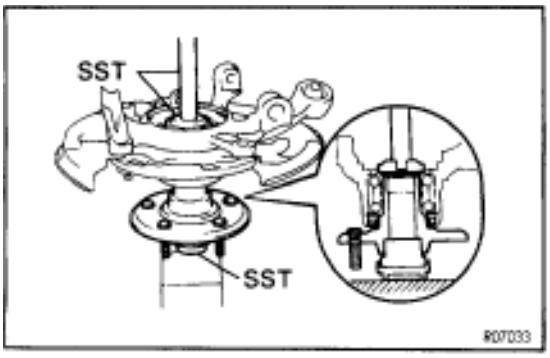

3. INSTALL AXLE HUB

(a) Temporarily install the backing plate with the hexagon bolt.
(b) Place the inner race (inside).
(c) Using SST and a press, install the axle hub.
SST 09608–12010 (09608–00020, 09608–00060), 09608–32010

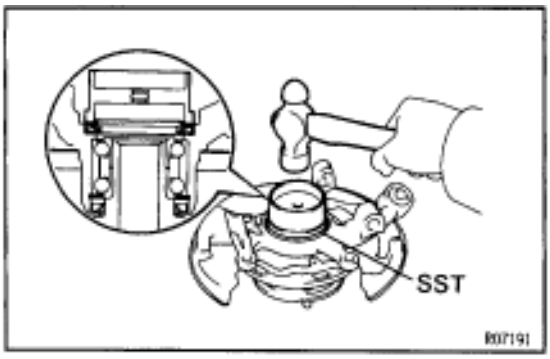

4. INSTALL OIL SEAL (Inner)

(a) Using SST and a hammer, install a new oil seal.
SST 09223–15020
NOTICE: Be careful not to damage the oil seal.

(b) Coat MP grease to the oil seal lip.

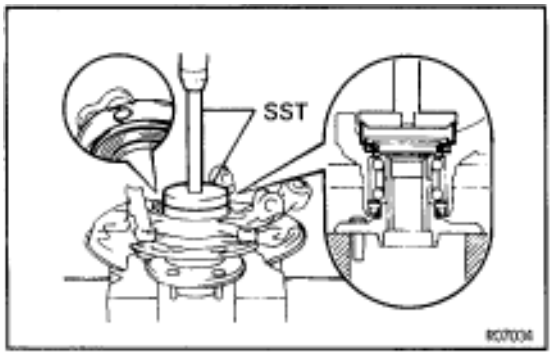

5. INSTALL DUST DEFLECTOR

Using SST and a press, install a new dust deflector.
SST 09608–35014 (09608–06020, 09608–06160)
HINT: Align the holes for the ABS speed sensor in the dust deflector and carrier.

HUB BOLT REPLACEMENT

1. REMOVE REAR WHEEL

2. REMOVE REAR BRAKE CALIPER AND DISC
(See page SA–38)

3. REMOVE HUB BOLT

Using SST, remove the hub bolt.
SST 09628–10011

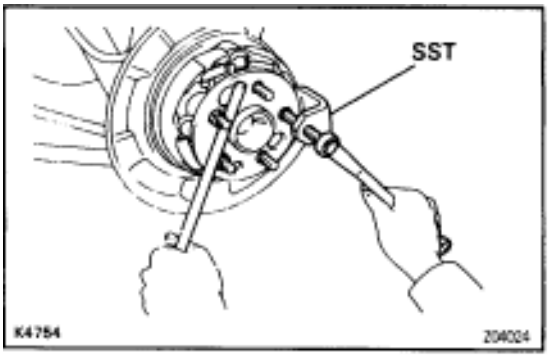

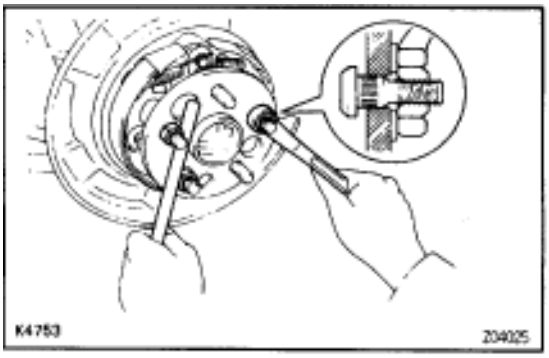

4. INSTALL HUB BOLT

(a) Install washer and nut to a new hub bolt, as shown in the illustration.

(b) Turn the wheel nut to pull the hub bolt through until the underside of the hub bolt head touches the axle hub.

5. INSTALL REAR BRAKE DISC AND BRAKE CALIPER
(See page SA–35)

6. INSTALL REAR WHEEL

Torque: 103 N·m (1,050 kgf·cm, 76 ft·lbf)

REAR DRIVE SHAFT

PREPARATION

SST (SPECIAL SERVICE TOOLS)

	09240–00020 Wire Gauge Set	
	(09242–00080) Wire Gauge	
	09521–24010 Drive Shaft Boot Clamping Tool	
	09726–10010 Lower Suspension Arm Bushing Remover & Replacer	Drive shaft inboard joint
	(09726–00030) Spacer	

RECOMMENDED TOOLS

	09905–00012 Snap Ring No. 1 Expander	For removing and installing snap ring

EQUIPMENT

Torque wrench	

LUBRICANT

Item	Capacity	Classification
Outboard Joint	100–105 g (0.22–0.23 lb, 3.5–3.7 oz.)	
Inboard Joint	100–105 g (0.22–0.23 lb, 3.5–3.7 oz.)	
End cover	50–55 g (0.11–0.12 lb, 1.8–1.9 oz.)	

SSM (SPECIAL SERVICE MATERIALS)

08826–00801	Seal Packing 1121, THREE BOND 1121 or equivalent (FIPG)	

REAR DRIVE SHAFT COMPONENTS

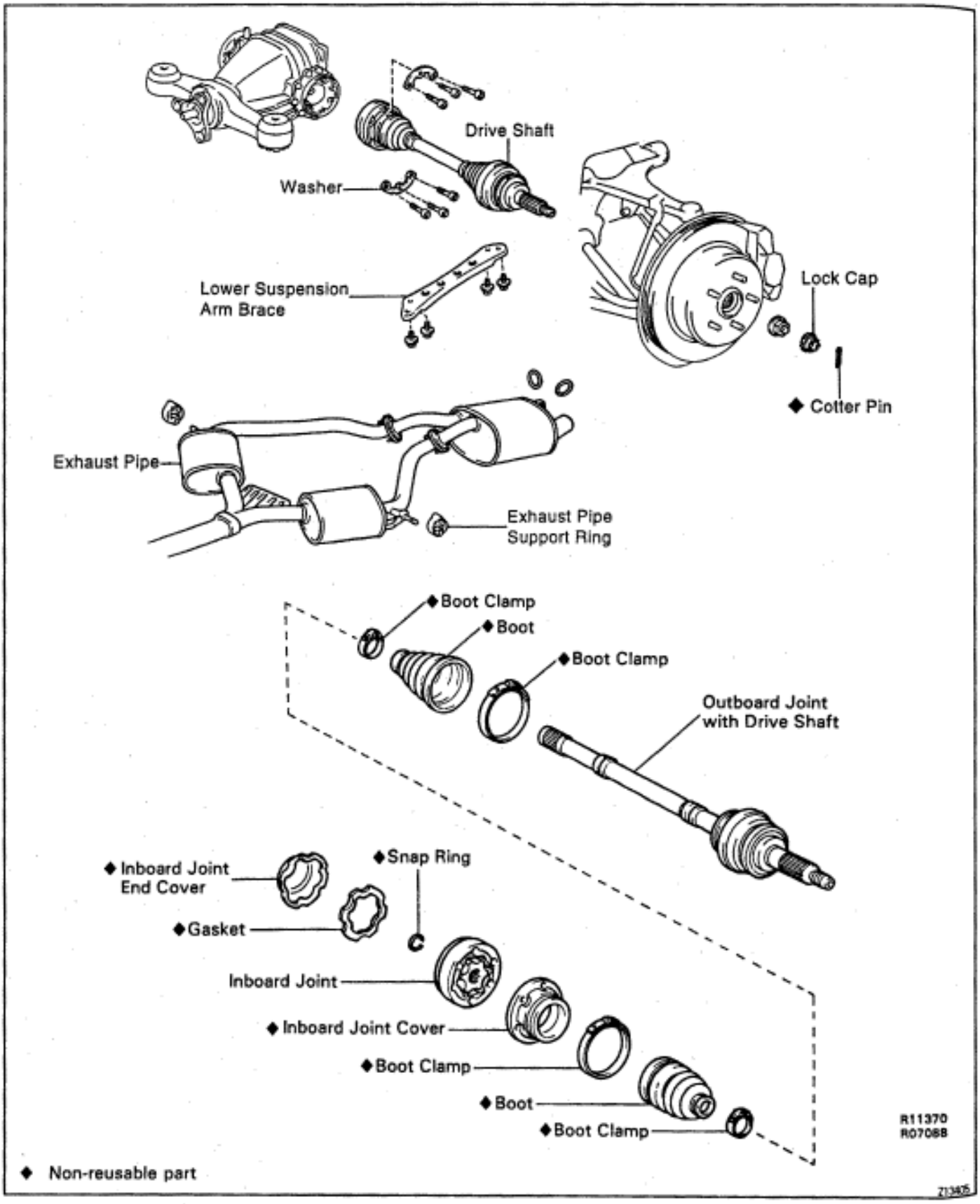

REAR DRIVE SHAFT REMOVAL

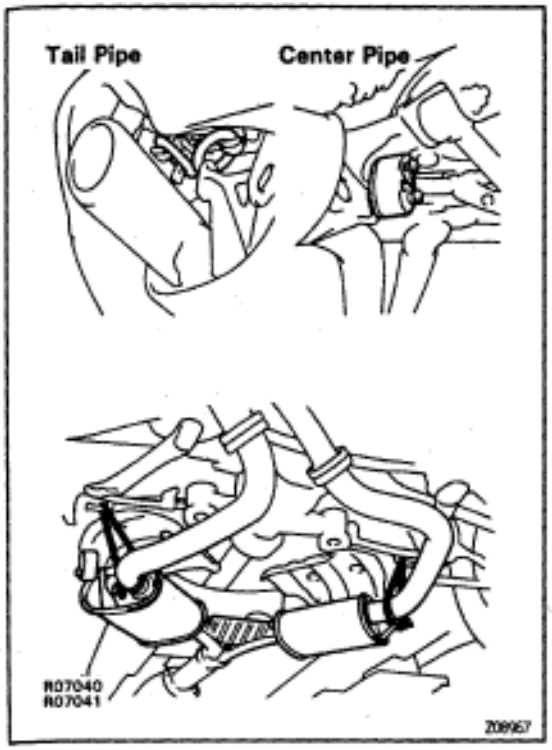

Installation is in the reverse order of removal.

INSTALLATION HINT: After installation, check ABS speed sensor signal.

(See page BR–62**)**

1. REMOVE REAR WHEEL

Torque: 103 N·m (1,050 kgf·cm, 76 ft·lbf)

2. DISCONNECT EXHAUST PIPE MOUNTING

(a) Remove the 2 exhaust pipe support rings.

(b) Support the exhaust pipe securely.

(c) Remove the 2 exhaust pipe support O–rings.

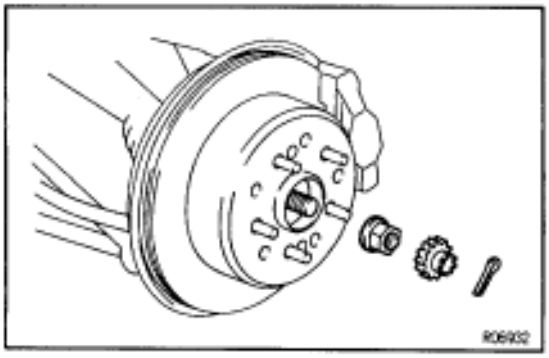

3. REMOVE COTTER PIN, LOCK CAP AND LOCK NUT

(a) Remove the cotter pin and lock cap.

(b) While depressing the brake pedal, remove the nut.

Torque: 289 N·m (2,950 kgf·cm, 213 ft·lbf)

4. REMOVE LOWER SUSPENSION ARM BRACE

Remove the 4 bolts and lower suspension arm brace.

Torque: 18 N·m (180 kgf·cm, 13 ft·lbf)

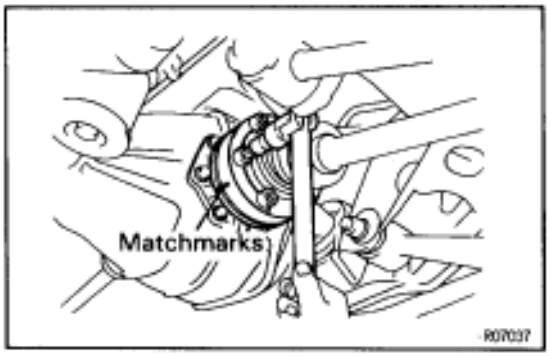

5. REMOVE REAR DRIVE SHAFT

(a) Place matchmarks on the drive shaft and side gear shaft.

NOTICE: Do not use a punch to mark the matchmarks. Use paint, etc.

(b) Using a 10 mm hexagon wrench, remove the 6 hexagon bolts and 2 washers while depressing the brake pedal.

Torque: 83 N·m (850 kgf·cm, 61 ft·lbf)

INSTALLATION HINT: Apply a light coat of engine oil on the threads of the bolts.

(c) Disconnect the inboard joint from the differential side gear shaft.

(d) Hold the inboard joint side of the drive shaft so that the outboard joint side does not bend too much.

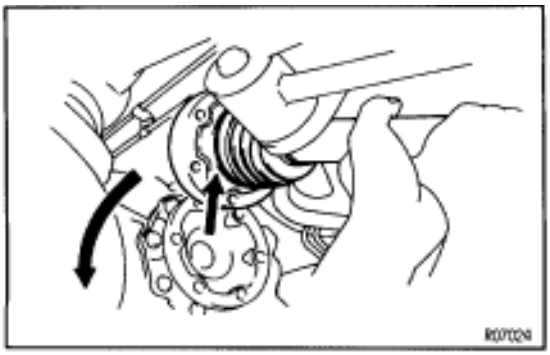

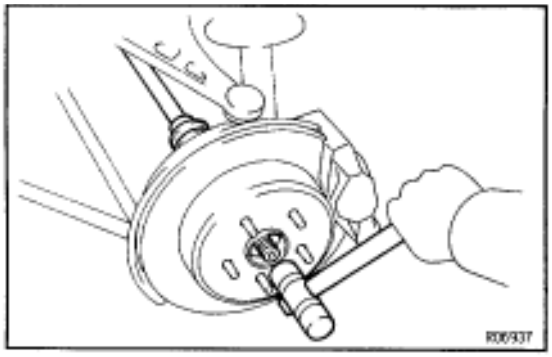

(e) Using a hammer, lightly tap the end of the drive shaft, disengage the axle hub and remove the drive shaft.
NOTICE: Be careful not to damage the boots and speed sensor rotor of the drive shaft, and oil seal of the axle hub.
INSTALLATION NOTICE: Make sure the outboard joint side of the drive shaft does not bend too much.

REAR DRIVE SHAFT DISASSEMBLY

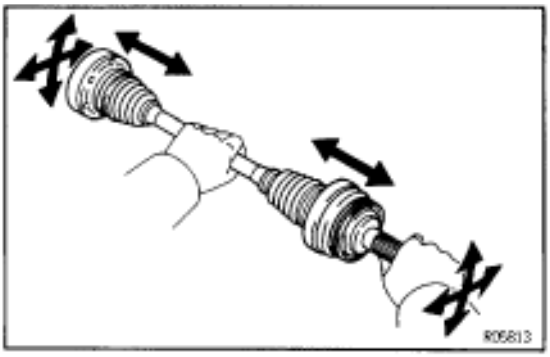

1. CHECK DRIVE SHAFT
(a) Check that operation of the joint is smooth within the sliding region in the axial direction.
HINT: If a large angle is used for the cross–groove type joint, the joint will feel like it is catching, but this does not indicate an abnormality.
(b) Check that the boots are not cracked, damaged or leaking.
(c) Check that there are no scratches on the speed sensor rotor.

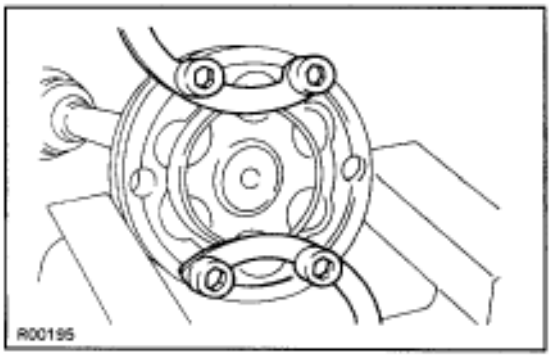

2. REMOVE END COVER
(a) Using a screwdriver, remove the end cover.
(b) Use bolts, nuts and washers to keep the inboard joint together.
NOTICE: Tighten the bolt by hand to avoid scratching the flange surface.

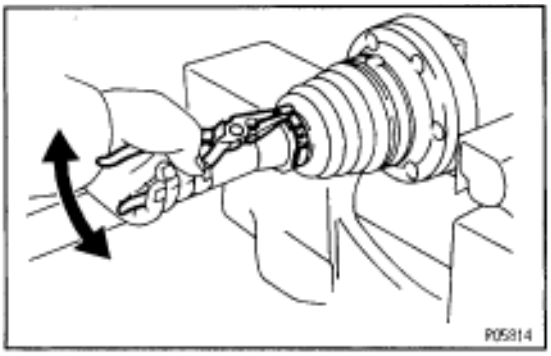

3. REMOVE BOOT CLAMPS
Using a side cutter or pliers, remove the clamps.

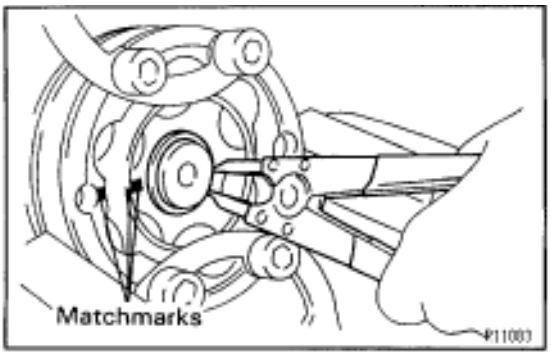

4. REMOVE INBOARD JOINT
(a) Place matchmarks on the inboard joint and drive shaft.
NOTICE: Do not punch the marks.
(b) Using a snap ring expander, remove the snap ring.

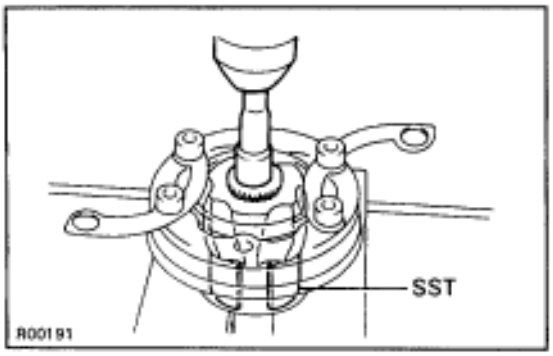

(c) Using SST, an extension bar and a press, press out the inboard joint from the drive shaft.
SST 09726–12022 (09726–01030)

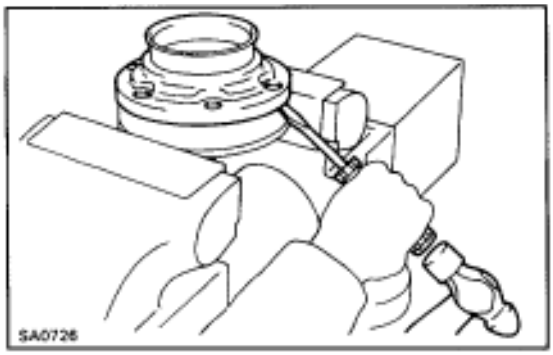

(d) Mount the inboard joint in a soft jaw vise.
(e) Using a screwdriver and hammer, tap out the inboard joint cover from the inboard joint.
NOTICE: Make sure the cage and inner race are not positioned too much to one side of the outer race.

5. REMOVE BOOTS FROM DRIVE SHAFT
Remove the inboard joint boot and outboard boot.

REAR DRIVE SHAFT ASSEMBLY

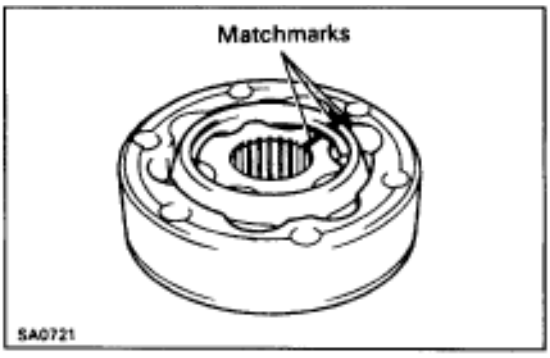

1. ASSEMBLE INBOARD JOINT
If the joint has come apart, reassemble it in the following order.
(a) Align the matchmarks placed before removal.

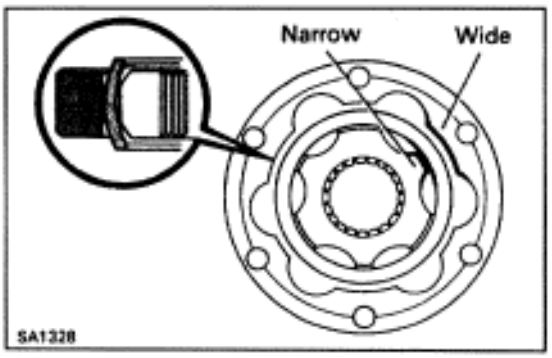

HINT: When the matchmarks have disappeared, do the following procedure.
(1) Install the inner race to the cage so that the indented bevelled part of the inner race is on the opposite side to the bevelled top of the cage.
(2) Install the outer race so that the indented side of the outer race is facing the same side as the bevelled surface of the cage.
(3) Match the narrow projections of the inner race with the wide projections of the outer race.

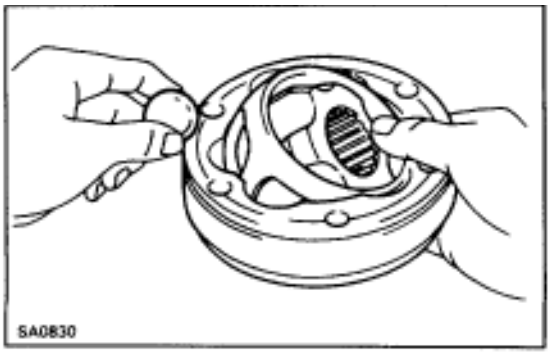

(b) Tilt the cage and inner race to the side and insert the balls one by one.
NOTICE: When the cage and inner race are tilted over, support the joint with your hand to prevent the balls from falling out.

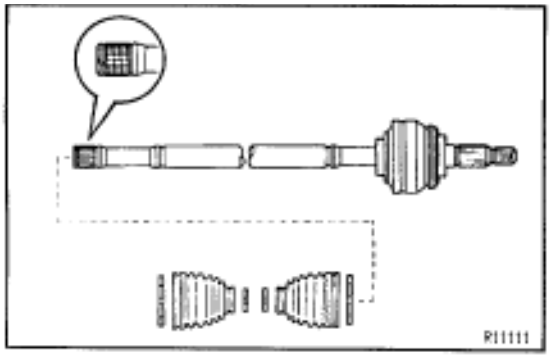

2. TEMPORARILY INSTALL NEW BOOTS AND NEW BOOT CLAMPS

(a) Place 4 new boot clamps to boots.
HINT: Before installing the boots, wrap vinyl tape around the spline of the shaft to prevent damaging the boots.

(b) Install 2 boots to the drive shaft.

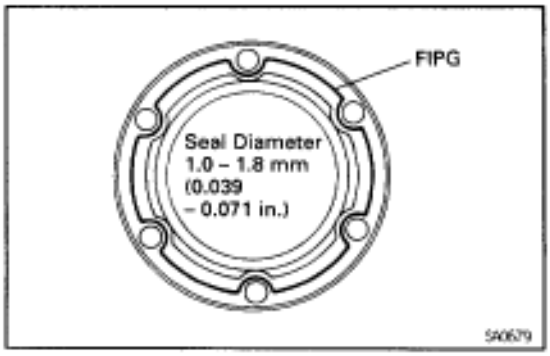

3. INSTALL INBOARD JOINT COVER

(a) Apply FIPG to the inboard joint cover as shown in the illustration.
FIPG:
Part No.08826–00801, THREE BOND 1121 or equivalent
- Install a nozzle that has been cut to a 1 mm (0.04 in.) opening.

HINT: Avoid applying an excessive amount to the surface

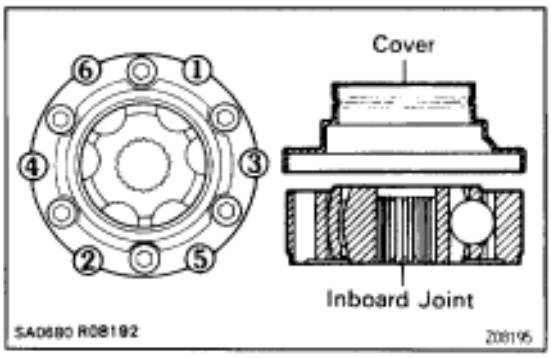

(b) Remove grease from the surface of the inboard joint facing the cover.

(c) Align the bolt holes of the cover with those of the inboard joint, then insert the hexagon bolts.

(d) Use a plastic–faced hammer to tap the rim of the inboard joint cover into place. Do this in the order shown, and repeat several times.

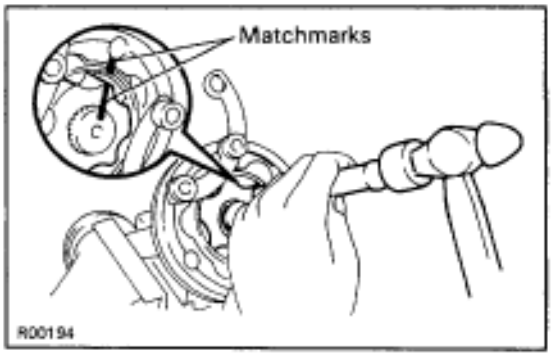

4. INSTALL INBOARD JOINT

(a) Align the matchmarks placed before removal.

(b) Using a brass bar and hammer, tap the inboard joint onto the drive shaft.
NOTICE: Check that the brass bar is touching the inner race, and not the cage.

(c) Using a snap ring expander, install a new snap ring.

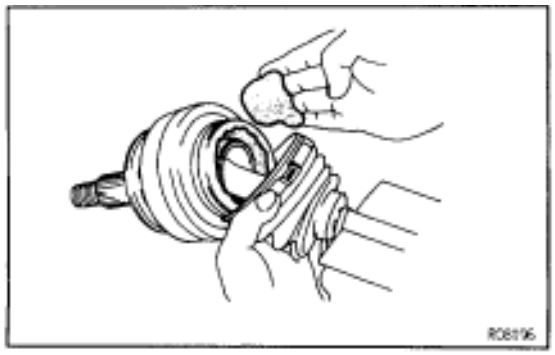

5. ASSEMBLE BOOTS TO JOINTS

Before assembling the boot, pack with only the same amount of grease that was wiped off.
Grease capacity (Outboard joint):
100 – 105 g (0.22–0.23 lb, 3.5 – 3.7 oz.)

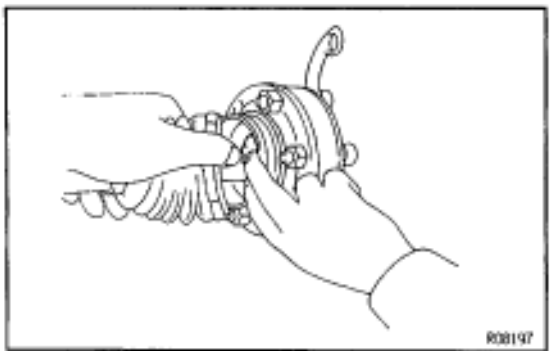

Grease capacity (Inboard joint):

100–105 g (0.22–0.23 lb, 3.5–3.7 oz.)

HINT: Use the grease supplied in the boot kit.

NOTICE:

- **Keep grease off the joint connection groove of the boot.**
- **Pack with grease all over the ball contact surface inside the joint.**

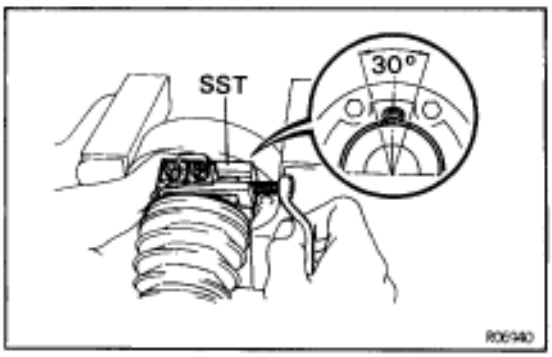

6. INSTALL NEW BOOT CLAMPS TO BOTH BOOTS

(a) Position the clamp onto the boot.

HINT: Pinch the inboard side of the boot clamp, as shown in the illustration.

(b) Place SST onto the clamp.

SST 09521–24010

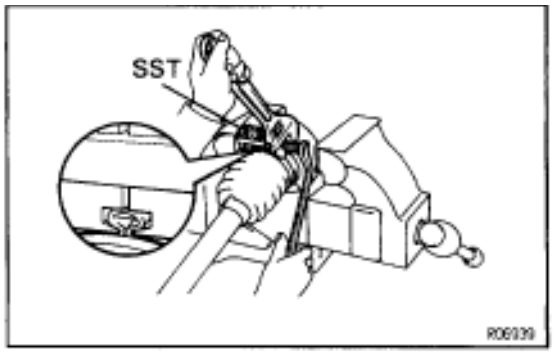

(c) Tighten SST so that the clamp is pinched.

NOTICE: Do not overtighten the SST.

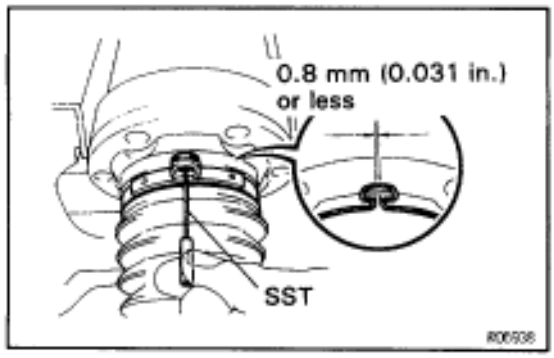

(d) Using SST, adjust the clearance of the clamp.

SST 09240–00020

Clearance:

0.8 mm (0.031 in.) or less

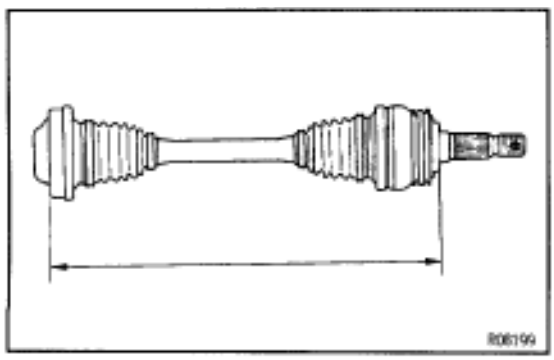

(e) The drive shaft is designed to move +20 mm from the normal position.

Drive shaft standard length

	2JZ–GTE (M/T)	Others
RH	598.5 mm (23.602 in.)	598.5 mm (23.602 in.)
LH	547.5 mm (21.555 in.)	553.5 mm (21.791 in.)

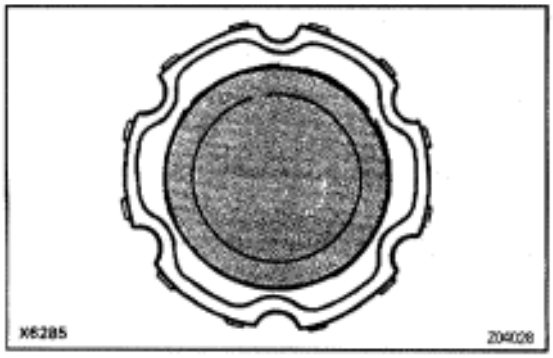

7. INSTALL NEW END COVER

(a) Pack grease into the end cover.
Grease capacity:
50–55 g (0.11–0.12 lb, 1.8–1.9 oz.)

(b) Remove grease from the surface of the inboard joint facing the cover.

(c) Glue on a new gasket, with the side with adhesive on it facing toward the outer race side of the inboard joint.

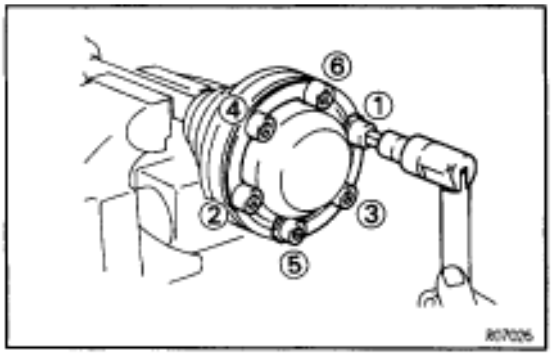

(d) Align the bolt holes of the cover with those of the inboard joint.

(e) Install the 6 hexagon bolts and washer from the end cover side.

(f) Install the 6 nuts to the boot side.

(g) Using a 10 mm hexagon wrench, tighten the bolts. Do this in the order shown, and repeat several times.

(h) Check that the claw of the end cover touches the inboard joint.

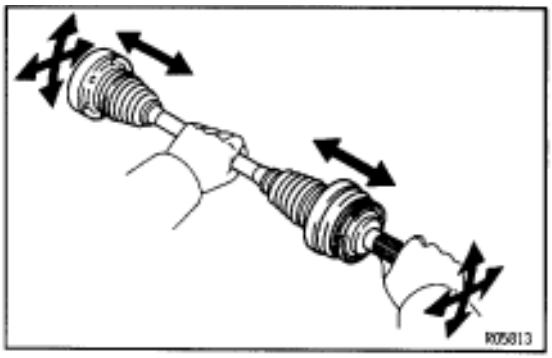

8. CHECK DRIVE SHAFT

Check that operation of the joint is smooth within the sliding region in the axial direction.

HINT: If a large angle is used for the cross–groove type joint, the joint will feel like it is catching, but this does not indicate an abnormality.

REAR DIFFERENTIAL

PREPARATION

SST (SPECIAL SERVICE TOOLS)

	09223–15030	Oil Seal & Bearing Replacer	(2JZ–GTE M/T) Side gear shaft oil seal installation
	09229–55010	Oil Cooler Relief Valve Wrench	Drive pinion nut removal and installation
	09250–10011	Replacer Set “A”	
	(09252–10010)	No. 1 Replacer Handle	
	(09255–10011)	Crankshaft Rear Bearing Remover & Replacer	(Except 2JZ–GTE M/T) Rear bearing outer race installation
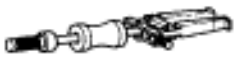	09308–00010	Oil Seal Puller	Side gear shaft oil seal removal Drive pinion oil seal removal
	09316–12010	Transfer Bearing Replacer	Differential mounting cushion removal
	09316–20011	Transfer Bearing Replacer	(2JZ–GTE M/T) Rear bearing installation
	09316–60010	Transmission & Transfer Bearing Replacer	
	(09316–00010)	Replacer Pipe	(Except 2JZ–GTE M/T) Dust cover installation Drive pinion oil seal installation
	(09316–00040)	Replacer “C”	(Except 2JZ–GTE M/T) Drive pinion oil seal installation
	(09316–00070)	Replacer “F”	(2JZ–GTE M/T) Drive pinion oil seal installation

	09330–00021	Companion Flange Holding Tool	
	09502–12010	Differential Bearing Replacer	(Except 2JZ–GTE M/T) Drive pinion oil seal installation
	09502–24010	Bearing Replacer	
	09502–24010	Differential Side Gear Shaft Puller	
	09502–10012	Replacer Set “B”	
	(09558–10010)	Rear Axle Shaft Oil Seal Replacer	
	09570–24010	Differential Mounting Cushion Remover & Replacer	
	09608–30012	Front Hub & Drive Pinion Bearing Tool Set	
	(09608–04030)	Front Hub Inner Bearing Cane Replacer	
	09608–32010	Steering Knuckle Oil Seal Replacer	(Except 2JZ–GTE M/T) Side gear oil seal installation
	09608–35014	Axle Hub Drive Pinion Bearing Tool Set	
	(09608–06020)	Handle	
	(09608–06040)	Front Hub Inner Bearing Cone Replacer	
	(09608–06090)	Front Hub Outer & Steering Worm Bearing Replacer	Dust deflector removal

	(09608–06100)	Front Hub Outer Bearing Replacer	(Except 2JZ–GTE M/T) Side bearing installation (2JZ–GTE M/T) Dust deflector installation
	(09608–06110)	Front Hub Inner & Drive Pinion Front Bearing Cup Replacer	(Except 2JZ–GTE M/T) Side bearing outer race removal Front bearing outer race installation
	(09608–06120)	Front Hub Outer Bearing Cup Replacer	Dust cover installation
	(09608–06150)	Rear Hub Outer Bearing Cup Replacer	(2JZ–GTE M/T) Side bearing outer race Carrier retainer installation
	(09608–06160)	Rear Hub Inner Bearing Cup Replacer	(2JZ–GTE M/T) Rear bearing outer race installation
	(09608–06180)	Drive Pinion Rear Bearing Cup Replacer	(Except 2JZ–GTE M/T) Carrier retainer installation
	(09608–06210)	Rear Axle Bearing Replacer	(Except 2JZ–GTE M/T) Side bearing outer race installation
	09631–32020	Seal Ring Tool	(2JZ–GTE M/T) Dust cover installation
	09710–30050	Suspension Arm Bushing Replacer	Side bearing installation
	09726–36010	Lower Control Arm Bushing Replacer	(2JZ–GTE M/T) Side bearing installation
	09950–00020	Bearing Remover	Rear bearing removal Dust deflector and dust cover removal
	09950–40010	Puller B Set	Carrier retainer removal Side bearing removal

RECOMMENDED TOOLS

	09924–12361	Deep socket Wrench 36.	(2JZ–GTE M/T) Drive pinion nut removal and installation
	09025–00010	Torque Wrench (30 kgf•cm)	Differential preload
	09031–00030	Pin Punch.	(Conventional differential only) Pinion shaft removal

EQUIPMENT

Dial indicator with magnetic base	
Micrometer	
Torque wrench	
Vernier calipers	

SSM (SPECIAL SERVICE MATERIALS)

08826–00090	Seal Packing 1281, THREE BOND 1281 or equivalent (FIPG)	Differential carrier X Cover
08833–00100	THREE BOND 1360K or equivalent	Differential case X Ring gear

LUBRICANT

Item	Capacity	Classification
Differential oil	1.35 liters (1.43 US qts, 1.19 lmp.qts)	API GL–5 Hypoid gear oil [Above – 18˚C (0˚F)] SAE 90 [Below – 18˚C (0˚F)] SAE 80W or 80W–90

ON–VEHICLE REPAIR COMPONENTS

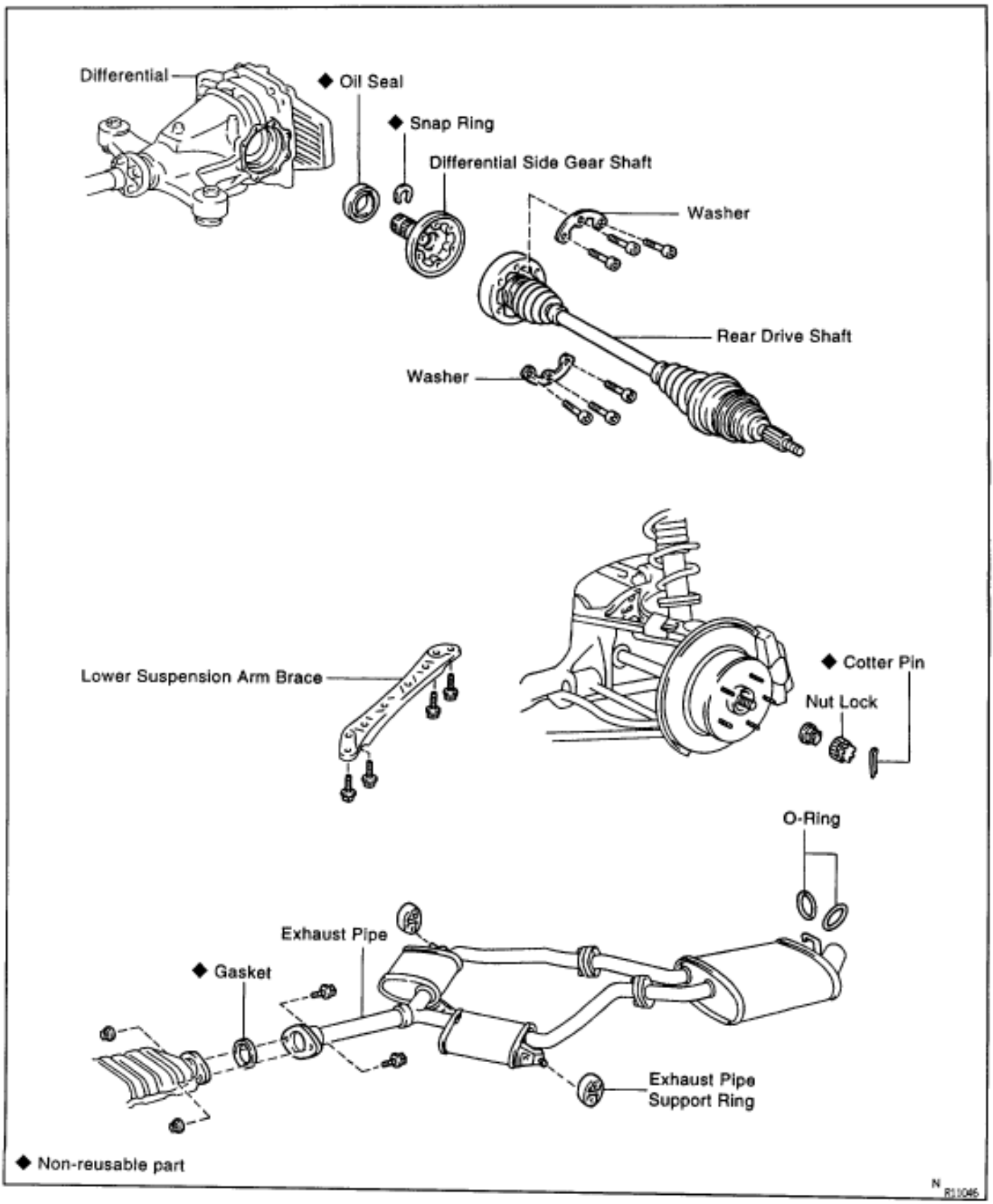

SIDE GEAR SHAFT OIL SEAL REPLACEMENT

1. DRAIN DIFFERENTIAL OIL

2. REMOVE REAR DRIVE SHAFT
(See page SA–46)

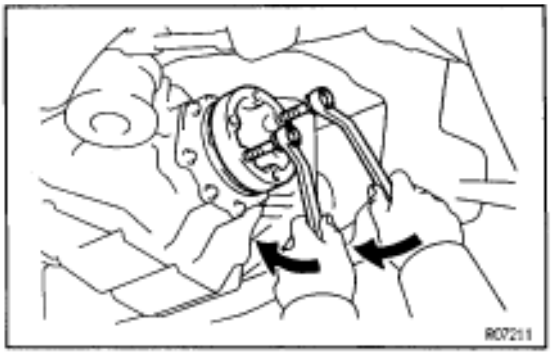

3. REMOVE SIDE GEAR SHAFT

(a) 2JZ–GTE M/T only:
Equally tighten both bolts at the same time and pull out the side gear shaft.
NOTICE: Pull out the side gear shaft until a nut can fit behind the shaft. Pulling the shaft out too far will damage the dust cover.

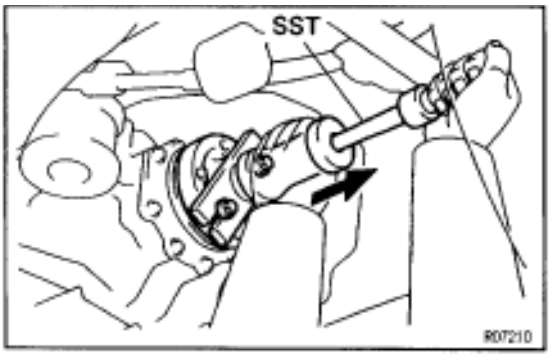

(b) Using SST and 2 bolts, nuts, remove the side gear shaft.
SST 09520–24010

4. REMOVE SNAP RING
Remove the snap ring from the side gear shaft.

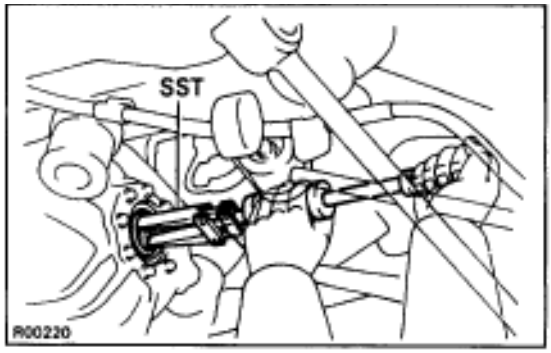

5. REMOVE SIDE GEAR SHAFT OIL SEAL
Using SST, remove the oil seal.
SST 09308–00010

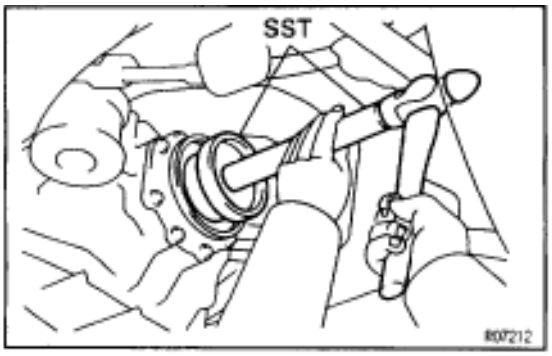

6. INSTALL SIDE GEAR SHAFT OIL SEAL

(a) Using SST and a hammer, drive in a new oil seal.
2JZ–GTE M/T:
SST 09223–15030, 09608–35014 (09608–06020)
Except 2JZ–GTE M/T:
SST 09608–32010, 09608–35014 (09608–06020)

(b) Apply MP grease to the oil seal lip.

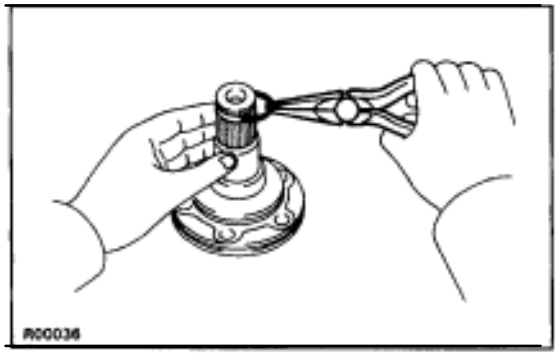

7. INSTALL SIDE GEAR SHAFT

(a) Install a new snap ring to the side gear shaft.

(b) Coat MP grease onto the snap ring.

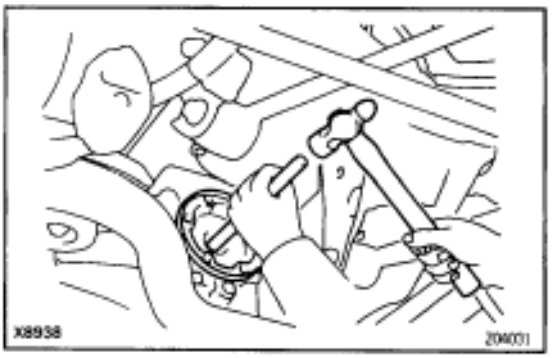

(c) Using a hammer and brass bar, tap in the side gear shaft to the differential.

NOTICE: Be careful not damage the side gear shaft and oil seal.

HINT: Whether or not the side gear shaft is making contact with the pinion shaft can be determined by the sound or feeling when driving it in.

8. CHECK INSTALLATION OF SIDE GEAR SHAFT

Check that the side gear shaft will not come out by trying to pull it out by hand.

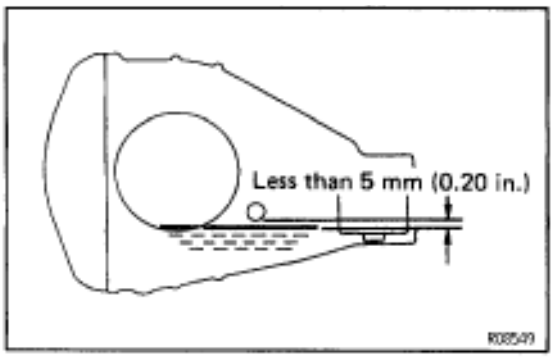

9. INSTALL REAR DRIVE SHAFT

(See page SA–46)

10. FILL DIFFERENTIAL WITH OIL

Oil grade:

API GL–5 Hypoid gear oil

Viscosity:

Above – 18˚C (0˚F) SAE 90

Below – 18˚C (0˚F) SAE 80W–90 or 80W

Capacity:

1.35 liters (1.43 US qts, 1.19 lmp. qts)

ASSEMBLY REMOVAL AND INSTALLATION COMPONENTS

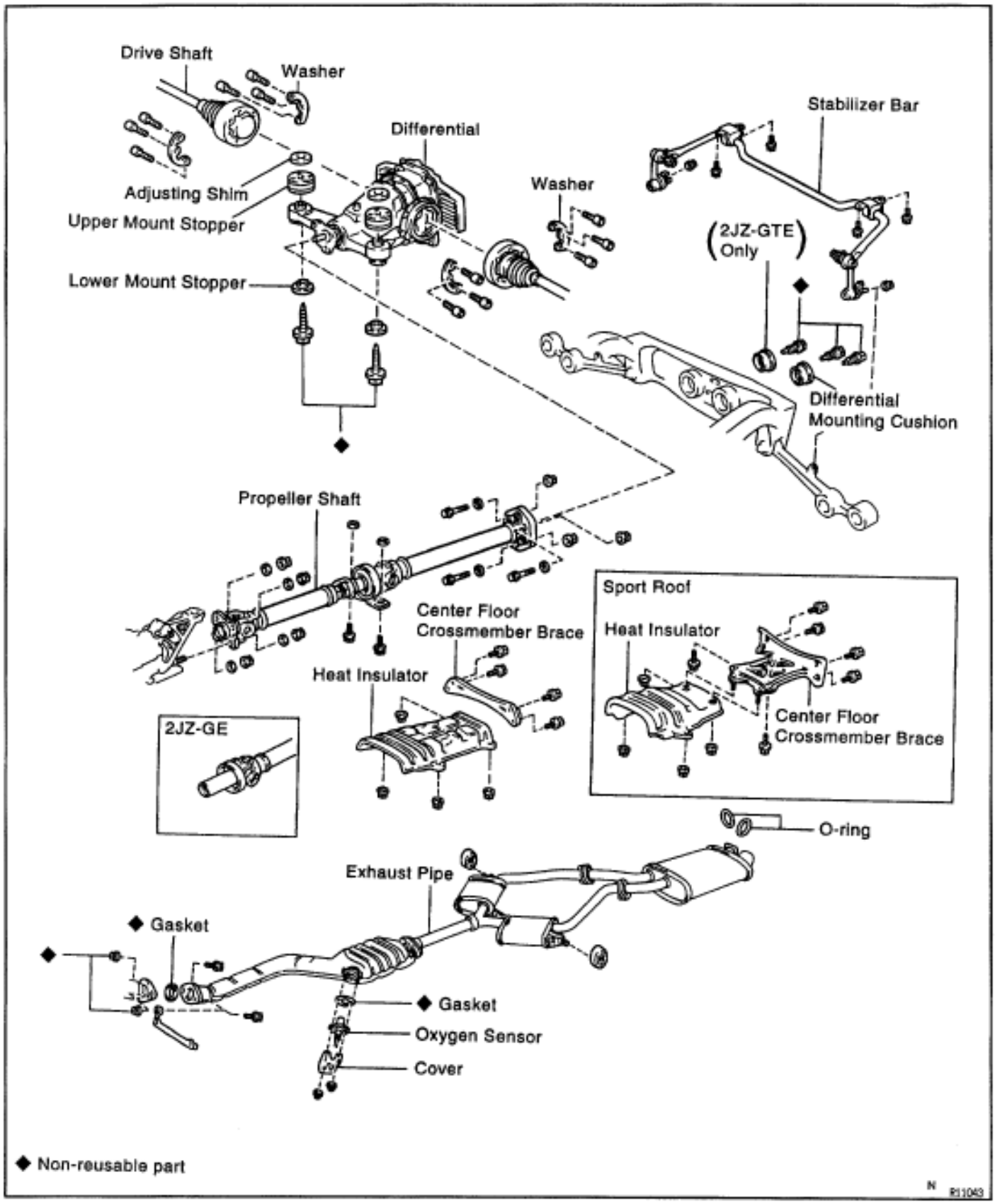

DIFFERENTIAL REMOVAL

Installation is in the reverse order of removal.

1. **DRAIN DIFFERENTIAL OIL**
2. **REMOVE PROPELLER SHAFT**
   (See page PR–5)

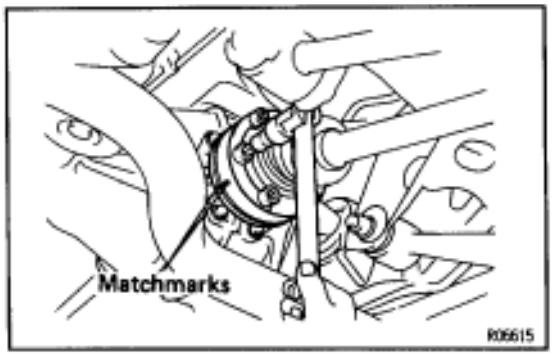

3. **DISCONNECT BOTH REAR DRIVE SHAFTS FROM DIFFERENTIAL**

(a) Place matchmarks on the drive shaft and side gear shaft.

(b) Using a 10 mm hexagon wrench, disconnect both drive shafts from the differential.
Torque: 83 N·m (850 kgf·cm, 64 ft·lbf)
INSTALLATION HINT: Apply a light coat of engine oil on the threads of the bolts.

(c) Support both drive shafts securely.

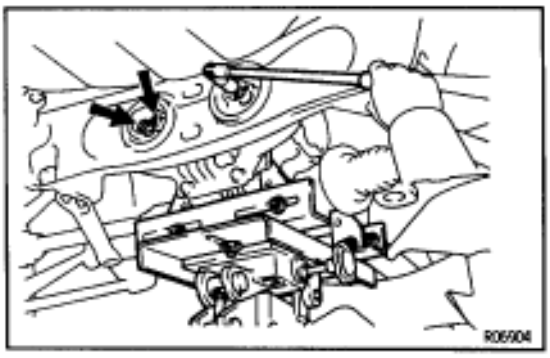

4. **REMOVE REAR STABILIZER BAR**
   (See page SA–96)
5. **REMOVE DIFFERENTIAL**

(a) Support the differential with a jack.

(b) Using a 12 mm hexagon wrench, remove the bolts.
Torque: 142 N·m (1,450 kgf·cm, 105 ft·lbf)

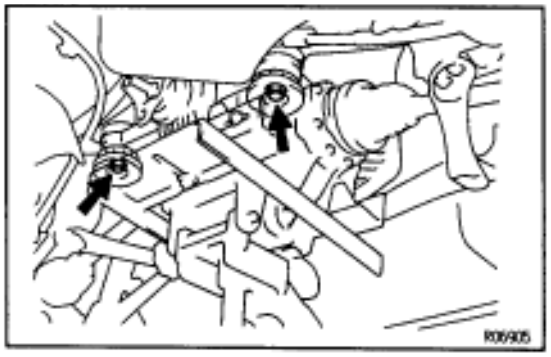

(c) Remove the 2 bolts and lower mount stoppers.
Torque: 147 N·m (1,500 kgf·cm, 108 ft·lbf)

(d) Remove the differential.

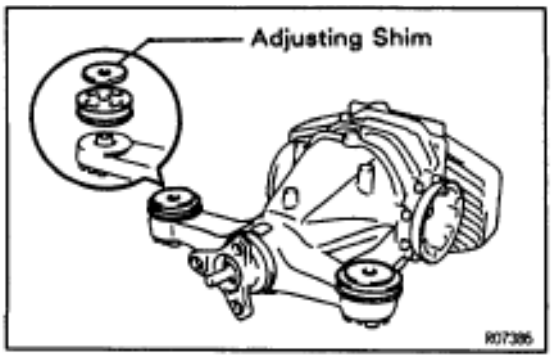

(e) Remove the upper mount stopper from the differential carrier.
HINT: During production, some vehicles did not need adjusting shims to be fitted.
INSTALLATION HINT: Use the upper mount stopper which was removed.

DIFFERENTIAL CARRIER COMPONENTS

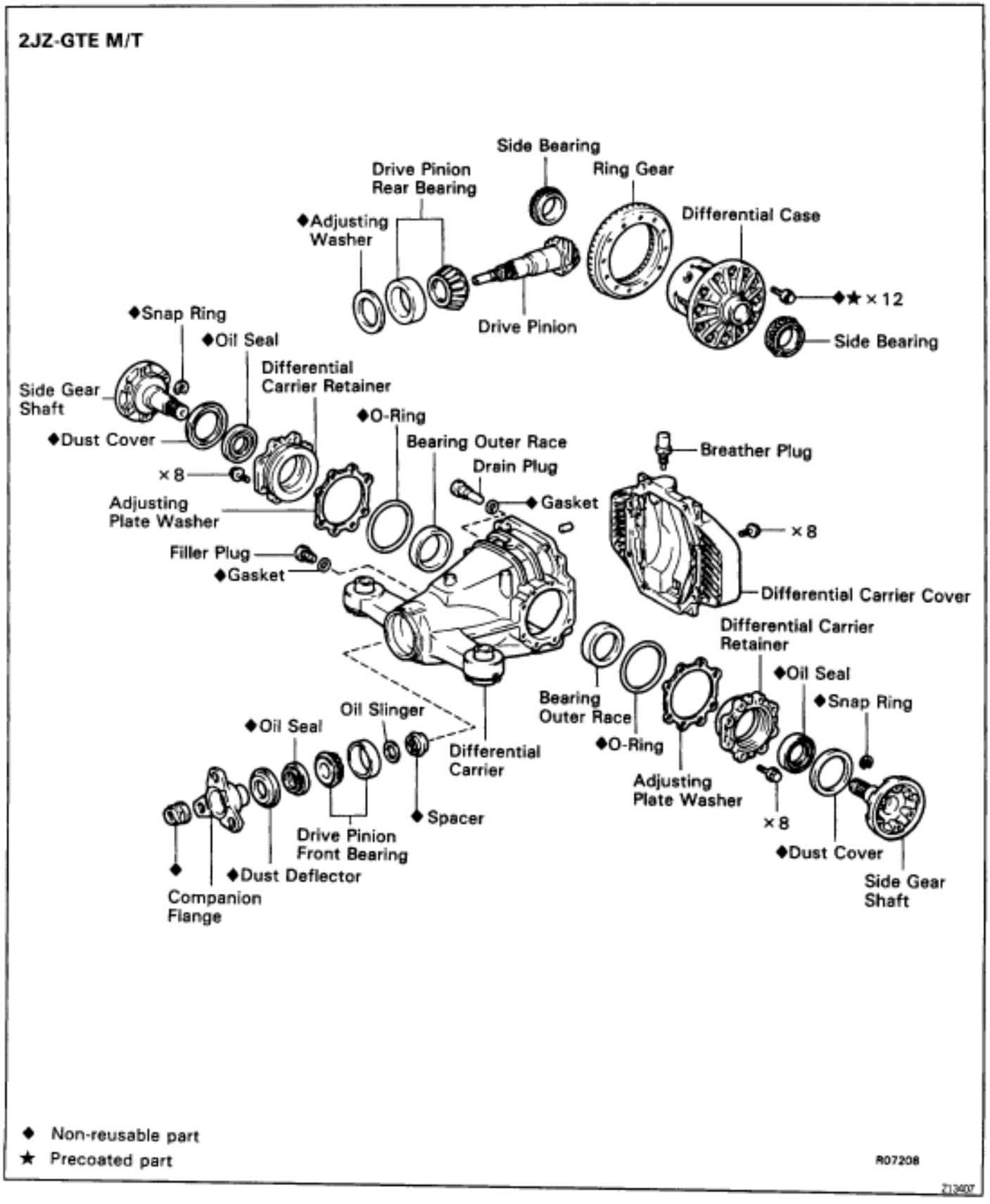

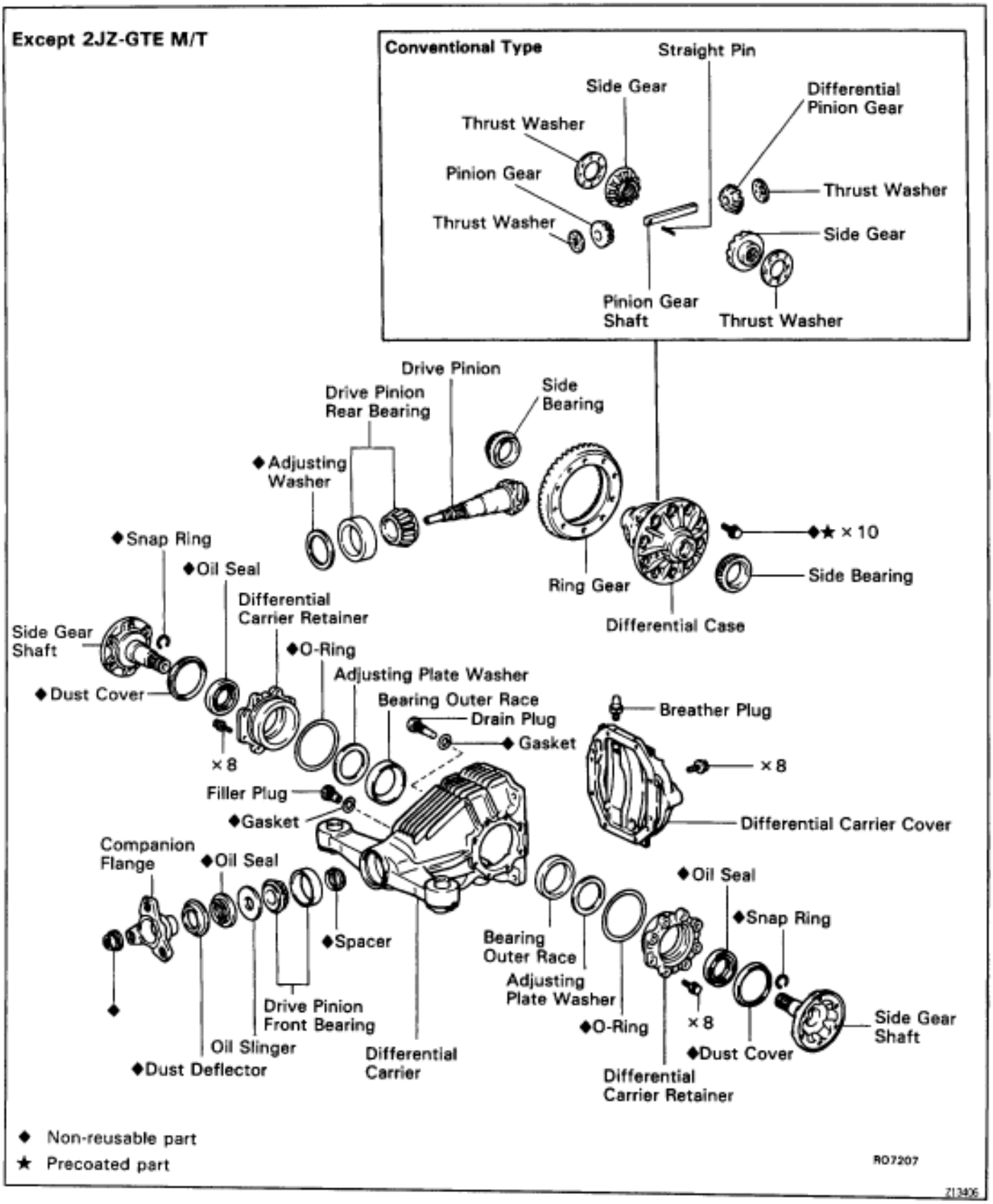
Except 2JZ-GTE M/T
Conventional Type
Straight Pin
Side Gear
Differential Pinion Gear
Thrust Washer
Pinion Gear
Thrust Washer
Thrust Washer
Side Gear
Pinion Gear Shaft
Thrust Washer
Drive Pinion
Drive Pinion Rear Bearing
Side Bearing
◆Adjusting Washer
◆★ × 10
Side Bearing
Ring Gear
Differential Case
◆Snap Ring
◆Oil Seal
Differential Carrier Retainer
Side Gear Shaft
◆O-Ring
Adjusting Plate Washer
◆Dust Cover
Bearing Outer Race
Drain Plug
◆Gasket
Breather Plug
× 8
× 8
Filler Plug
◆Gasket
Differential Carrier Cover
Companion Flange
◆Oil Seal
◆Oil Seal
◆Snap Ring
◆Spacer
Bearing Outer Race
Adjusting Plate Washer
◆O-Ring
× 8
Side Gear Shaft
Drive Pinion Front Bearing
Oil Slinger
◆Dust Deflector
Differential Carrier
◆Dust Cover
Differential Carrier Retainer
◆ Non-reusable part
★ Precoated part
RO7207
Z13406

DIFFERENTIAL CARRIER INSPECTION

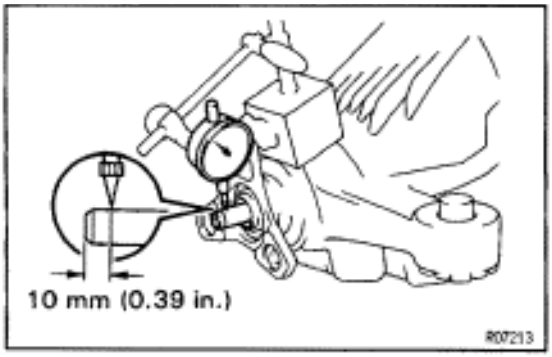

1. CHECK DRIVE PINION SHAFT RUNOUT

Measure the drive pinion shaft runout at a position 10 mm (0.39 in.) from the end of the shaft.

Maximum runout:

0.08 mm (0.0031 in.)

If the runout is greater than the maximum, replace the drive pinion and/or ring gear.

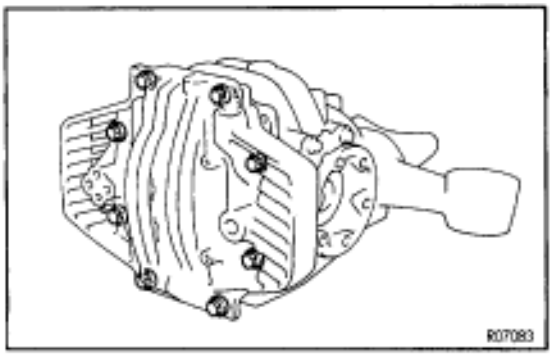

2. REMOVE DIFFERENTIAL CARRIER COVER

(a) Remove the 8 bolts from the carrier cover.

(b) Using a brass bar and hammer, separate the cover and carrier.

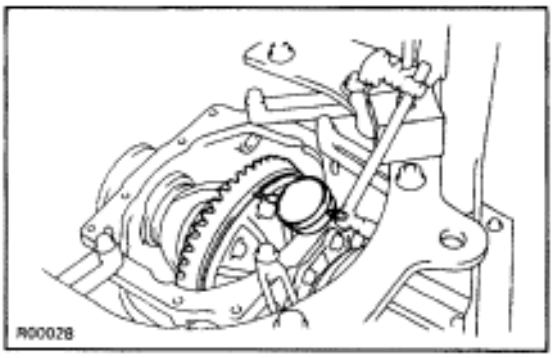

3. CHECK RING GEAR RUNOUT

Maximum runout:

2JZ–GTE M/T

0.08 mm (0.0031 in.)

Except 2JZ–GTE M/T

0.05 mm (0.0020 in.)

If the runout is greater than the maximum, replace the drive pinion, ring gear and/or differential case.

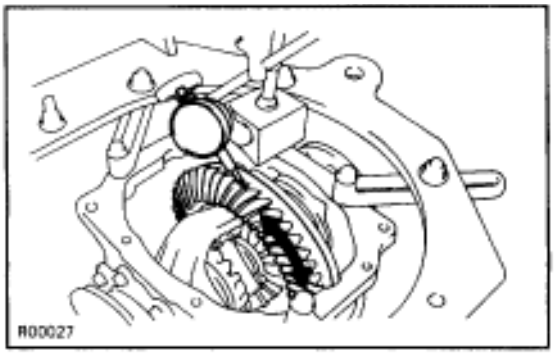

4. CHECK RING GEAR BACKLASH

Measure the backlash of the ring gear and drive pinion at 3 points (minimum) and check that the average value is within the specification.

Backlash (average value):

0.08–0.13 mm (0.0031–0.0051 in.)

NOTICE: The difference between the maximum and minimum measured values must be less than 0.05 mm (0.0020 in.).

If the backlash is not within the specification, adjust the ring gear backlash.

(See page SA–74)

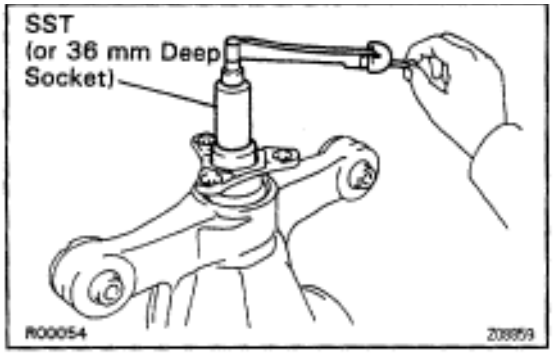

5. MEASURE DRIVE PINION PRELOAD

Using SST (or a 36 mm deep socket) and a torque wrench, measure the drive pinion preload using the backlash of the drive pinion and ring gear.

SST 09229–55010

Preload (at start):

2JZ–GTE M/T

1.0–1.2 N·m (10–12 kgf·cm, 8.9–10.6 in.·lbf)

Except 2JZ–GTE M/T

0.5–0.8 N·m (5–8 kgf·cm, 4.3–6.9 in.·lbf)

6. CHECK TOTAL PRELOAD

Using SST (or a 36 mm deep socket) and a torque wrench, measure the total preload.

SST 09229–55010

Total preload (at start):

In addition to drive pinion preload

2JZ–GTE M/T

0.4–0.6 N·m (4–6 kgf·cm, 3.4–5.2 in.·lbf)

Except 2JZ–GTE M/T

0.5–0.8 N·m (5–8 kgf·cm, 4.3–6.9 in.·lbf)

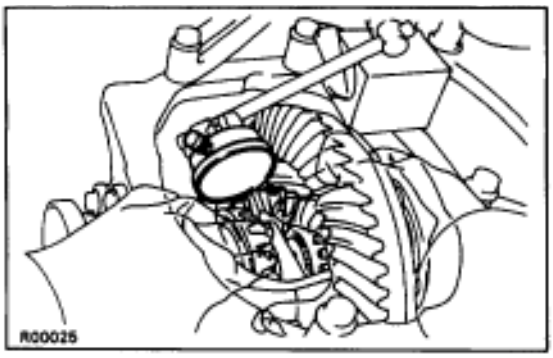

If necessary, disassemble and inspect the differential

7. CONVENTIONAL TYPE ONLY:

CHECK PINION GEAR BACKLASH

Measure the pinion gear backlash while holding one side gear toward the case.

Backlash:

0.05–0.20 mm (0.0020–0.0079 in.)

If the backlash is not within the specification, install the correct thrust washer.

(See page SA–70)

8. CHECK TOOTH CONTACT PATTERN

(See page SA–75)

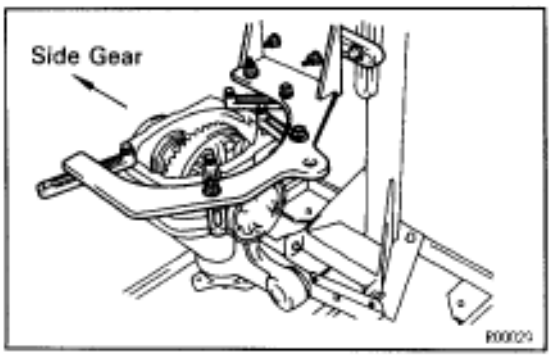

DIFFERENTIAL CARRIER DISASSEMBLY

HINT: When fastening the differential carrier to an overhaul stand, etc., fasten it at the 4 places on the ring gear side shown in the illustration.

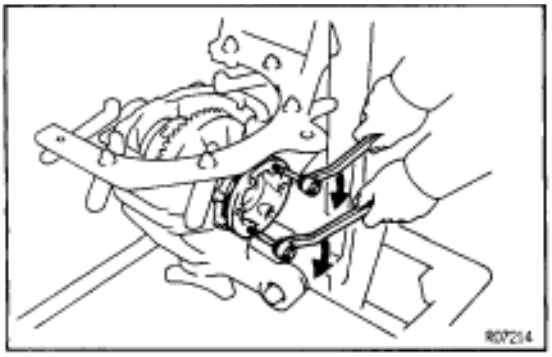

1. REMOVE SIDE GEAR SHAFT

(a) 2JZ–GTE M/T only:
Equally tighten both bolts at the same time and pull out the side gear shaft.
NOTICE: Pull out the side gear shaft until a nut can fit behind the shaft. Pulling the shaft out too far will damage the dust cover.

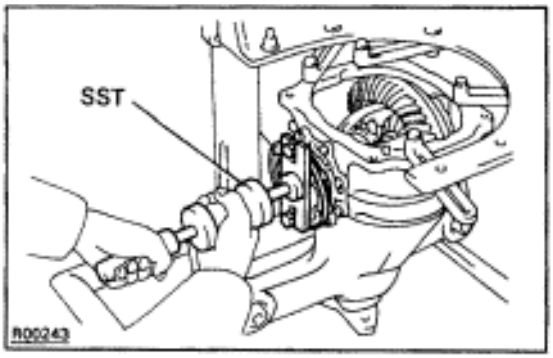

(b) Using SST and 2 bolts, nuts, remove the side gear shaft.
SST 09520–24010

(c) Using a screwdriver, remove the snap ring from the side gear shaft.

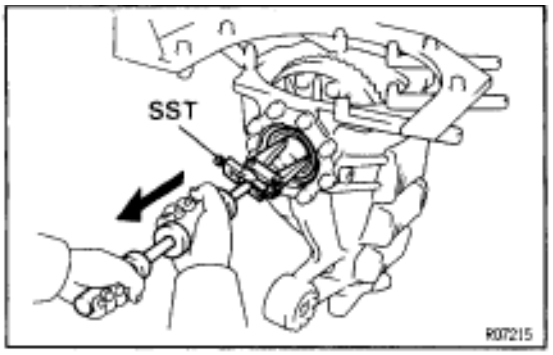

2. REMOVE SIDE GEAR SHAFT OIL SEALS

Using SST, remove the oil seal.
SST 09308–00010

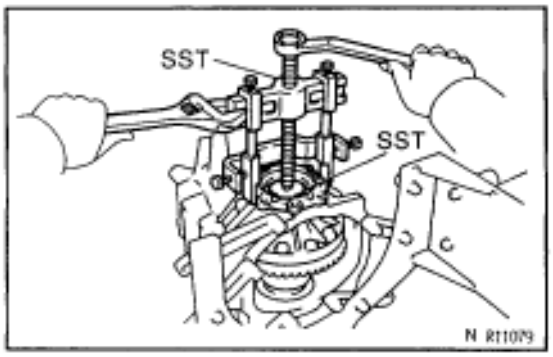

3. REMOVE DIFFERENTIAL CARRIER RETAINER (AND ADJUSTING PLATE WASHER)

(a) Remove the 8 bolts.

(b) 2JZ–GTE M/T:
Using SST, remove the carrier retainer and adjusting plate washer.
SST 09550–10012 (09558–10010),
09950–40010

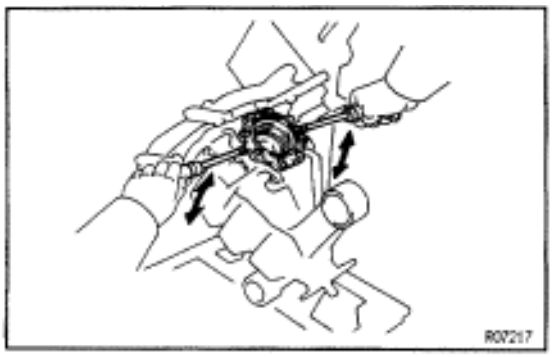

Except 2JZ–GTE M/T:
Using 2 screwdrivers, remove the carrier retainer.

(c) Using a screwdriver, remove the O–ring from the carrier retainer.

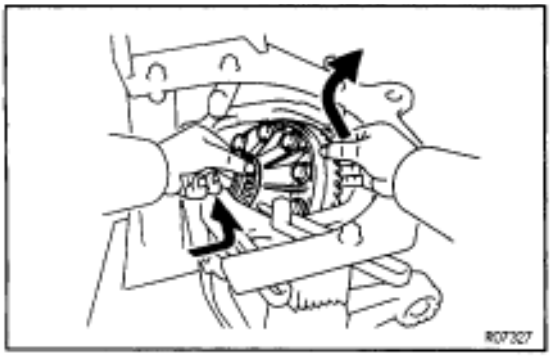

4. REMOVE DIFFERENTIAL CASE

Take the differential case out of the carrier while lifting the ring gear side, as shown in the illustration.

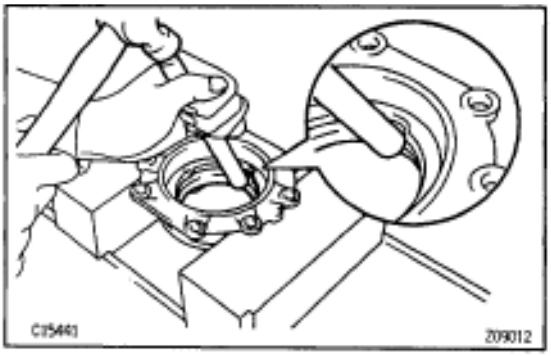

5. REMOVE SIDE BEARING OUTER RACE (AND ADJUSTING PLATE WASHER)

2JZ–GTE M/T:

Using a brass bar and hammer, drive out the outer race.

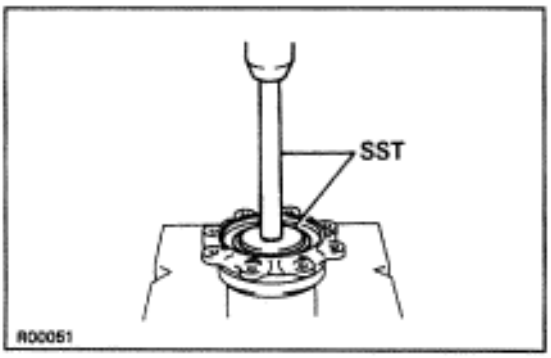

Except 2JZ–GTE M/T:

Using SST and a press, press out the outer race and adjusting plate washer.

SST 09608–35014 (09608–06020, 09608–06110)

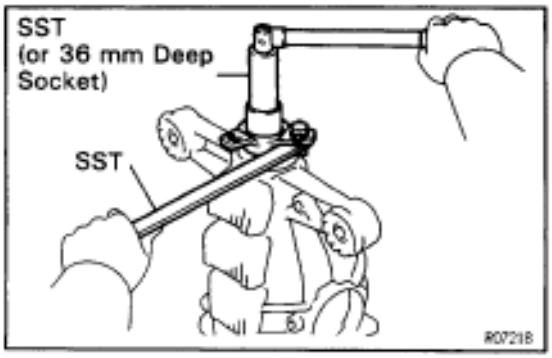

6. REMOVE DRIVE PINION, (OIL SLINGER), SPACER AND COMPANION FLANGE

(a) Using a hammer and chisel, loosen the staked part of the nut.

(b) Using SST (and a 36 mm deep socket wrench), remove the nut.

SST 09229–55010 (Except 2JZ–GTE M/T only),
09330–00021

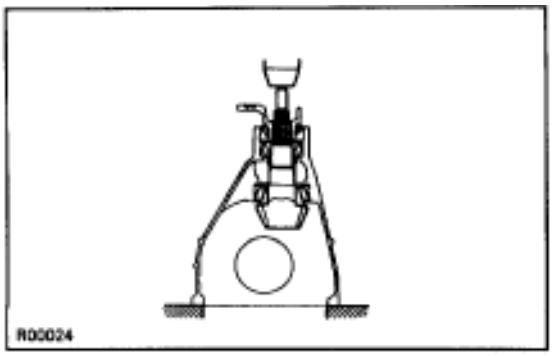

(c) Using a press, press out the drive pinion with the rear bearing and spacer.

NOTICE: Be careful not to drop the drive pinion.

(d) Remove the companion flange.

(e) Remove the oil slinger (2JZ–GTE M/T only) and spacer from the drive pinion.

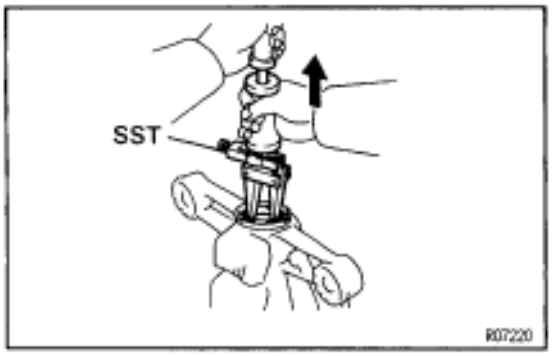

7. REMOVE OIL SEAL

Using SST, remove the oil seal.

SST 09308–00010

8. REMOVE (OIL SLINGER AND) FRONT BEARING

Remove the oil slinger (Except 2JZ–GTE M/T only) and front bearing by hand.

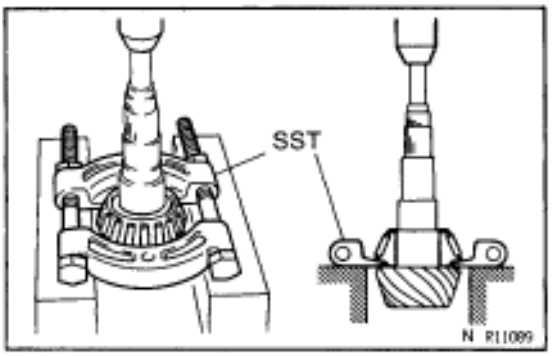

9. REMOVE REAR BEARING FROM DRIVE PINION

Using SST and a press, remove the rear bearing from the drive pinion.

SST 09950–00020

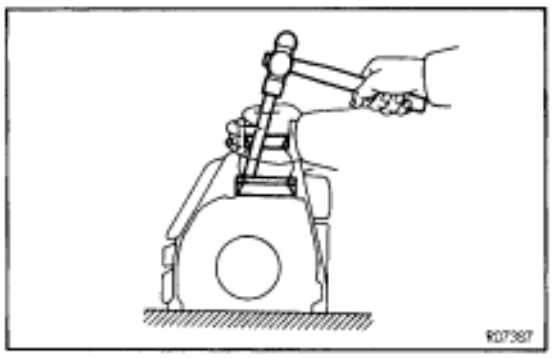

10. REMOVE FRONT AND REAR BEARING OUTER RACES AND ADJUSTING PLATE WASHER

Using a brass bar and hammer, drive out the outer races and adjusting plate washer from the differential carrier.

HINT: Measure the adjusting plate washer thickness and make a note of it for reassembly.

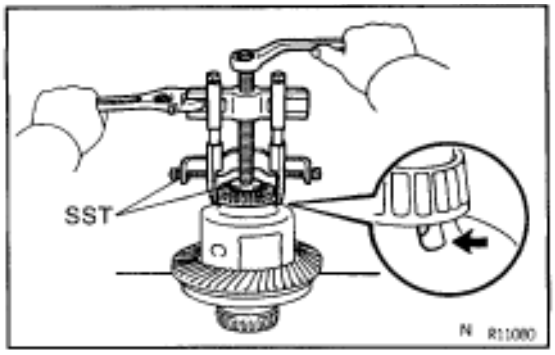

11. REMOVE LH AND RH SIDE BEARINGS

Using SST, remove the LH and RH side bearings from the differential case.

SST 09550–10012 (09558–10010), 09950–40010

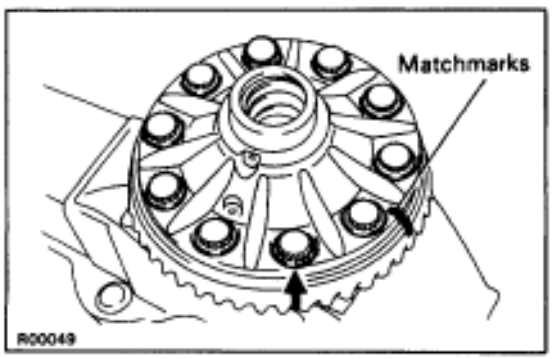

12. REMOVE RING GEAR

(a) Place matchmarks on the ring gear and differential case.

(b) Remove the ring gear set bolts.

(c) Using a plastic hammer, tap on the ring gear to separate it from the differential case.

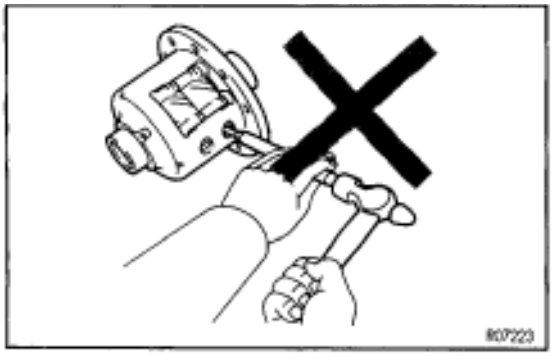

13. CONVENTIONAL DIFFERENTIAL ONLY: DISASSEMBLE DIFFERENTIAL CASE

NOTICE: If equipped with Torque Sensing LSD, do not disassemble the differential case.

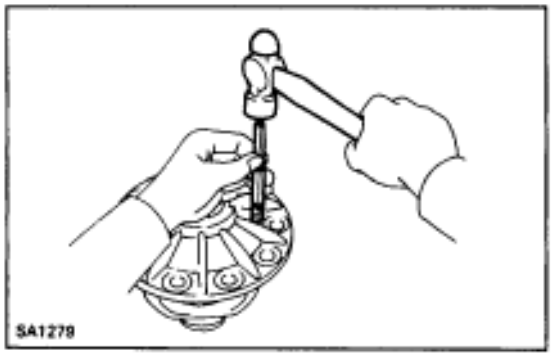

(a) Using a hammer and pin punch, drive out the straight pin.

(b) Remove these parts from the differential case.

- Pinion shaft
- Differential pinion
- Pinion thrust washer
- Side gear
- Side gears thrust washer

DUST DEFLECTOR AND DUST COVER REPLACEMENT

1. REPLACE COMPANION FLANGE DUST DEFLECTOR

(a) Using SST and a press, remove the dust deflector.

SST 09608–35014 (09608–06090), 09950–00020

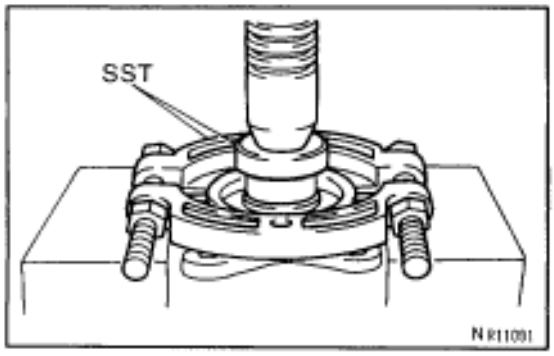

(b) Using SST and a press, install a new dust deflector.

2JZ–GTE M/T:

SST 09608–35014 (09608–06020, 09608–06100), 09631–32020

Except 2JZ–GTE M/T:

SST 09316–60010 (09316–00010)

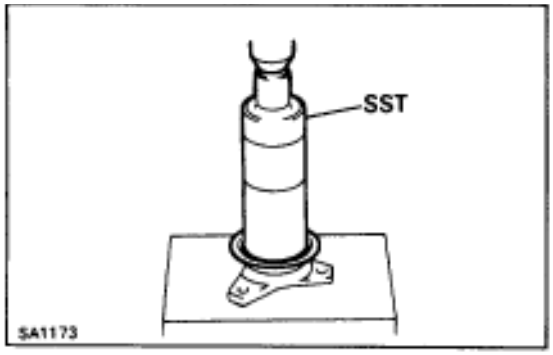

2. REPLACE SIDE GEAR SHAFT DUST COVER

(a) Using a screwdriver, remove the dust cover.

(b) Using SST and a press, install a new dust cover.

SST 09502–24010, 09608–35014 (09608–06020, 09608–06120)

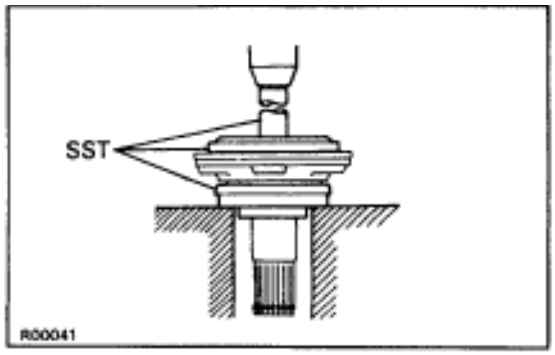

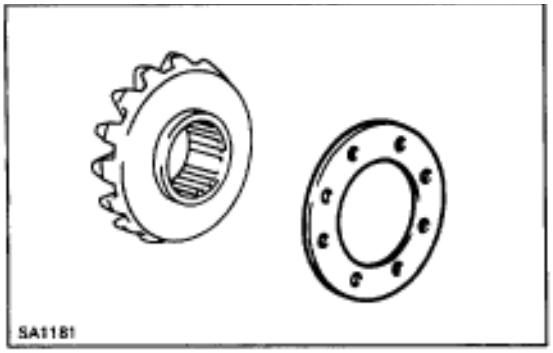

DIFFERENTIAL CARRIER ASSEMBLY

1. CONVENTIONAL DIFFERENTIAL ONLY: ADJUST DIFFERENTIAL PINION GEAR BACKLASH

(a) Install the proper thrust washers on the side gears.
HINT: Using the table below, select thrust washers which will ensure that the backlash is within specification.

Thrust washer thickness

Thickness mm (in.)	Thickness mm (in.)
1.6 (0.063)	1.8 (0.071)
1.7 (0.067)	—

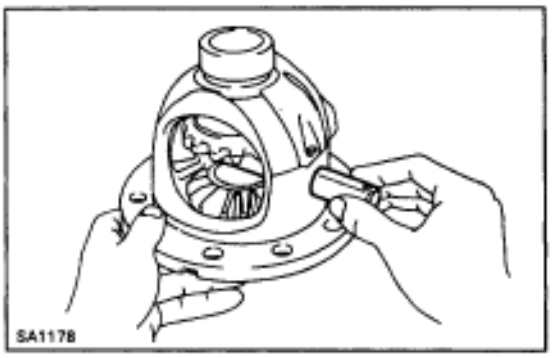

(b) Install the side gears, pinion gears, pinion gear thrust washers and pinion shaft in the differential case.
HINT: Align the holes of the differential case and pinion shaft.

(c) Push the side gear shafts gently into the differential case by hand and install them.

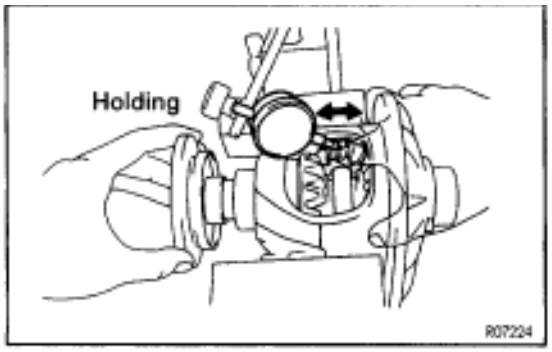

(d) Measure the pinion gear backlash while holding one side gear toward the case.
Backlash:
0.05–0.20 mm (0.0020–0.0079 in.)
If the backlash is not within the specification, install different thickness side gear thrust washers.

(e) Remove the side gear shaft.

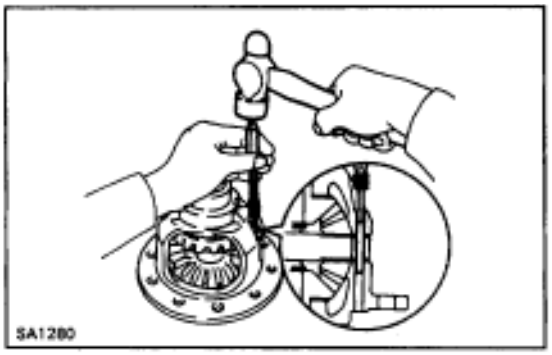

2. CONVENTIONAL DIFFERENTIAL ONLY: INSTALL RING GEAR ON DIFFERENTIAL CASE

(a) Using a hammer and pin punch, install the straight pin through the differential case and hole of the pinion shaft.

(b) Stake the differential case.

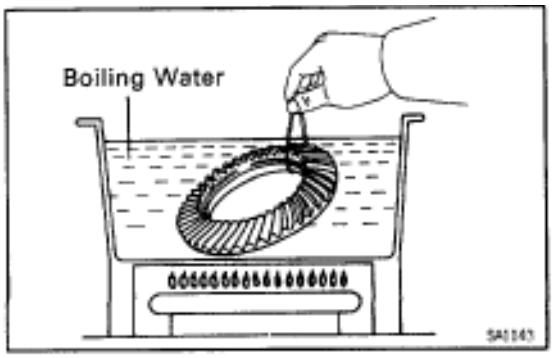

3. INSTALL RING GEAR ON DIFFERENTIAL CASE

(a) Clean the contact surfaces of the differential case and the threads of the ring gear and differential case.

(b) Heat the ring gear in boiling water.

(c) Carefully remove the ring gear from the boiling water.

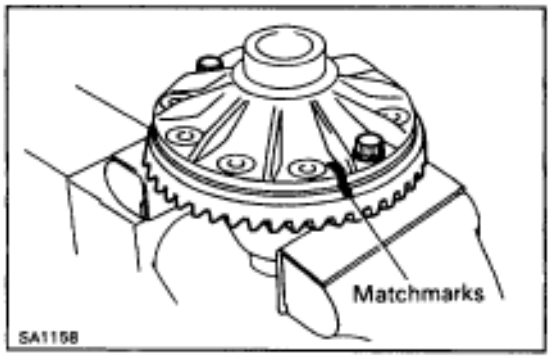

(d) After the moisture on the ring gear has completely evaporated, quickly install the ring gear to the differential case.
HINT: Align the matchmarks on the ring gear and the differential case.

(e) Temporarily tighten the 2 bolts so that the bolt holes in the ring gear and differential case are not misaligned.
NOTICE: The ring gear set bolts should not be tightened until the ring gear has cooled sufficiently.

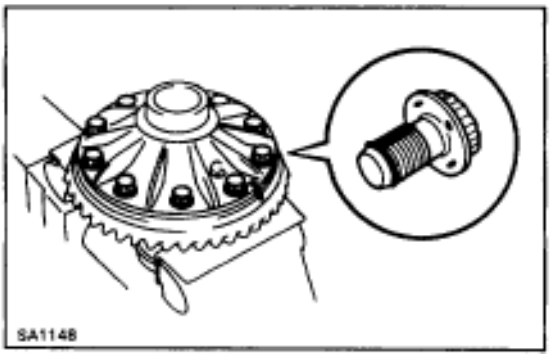

4. INSTALL RING GEAR SET BOLTS

(a) After the ring gear has cooled sufficiently, install new ring gear set bolts to which thread lock has been applied.
Thread lock:
Part No. 08833–00100, THREE BOND 1360 K or equivalent.
NOTICE: New ring gear set bolts should be used in every case.

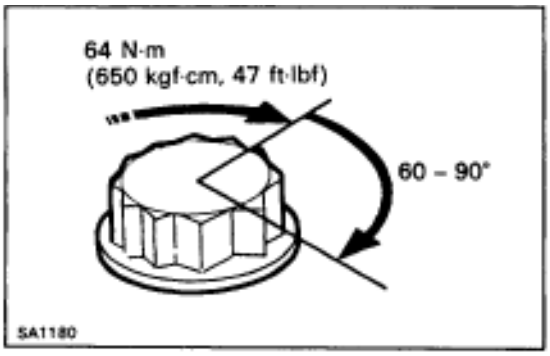

(b) Torque the set bolts uniformly and a little at a time.
Torque: 64 N·m (650 kgf·cm, 47 ft·lbf)

(c) Tighten the bolts an additional 60–90°.
NOTICE: Tighten the bolts in diagonally opposite pairs.

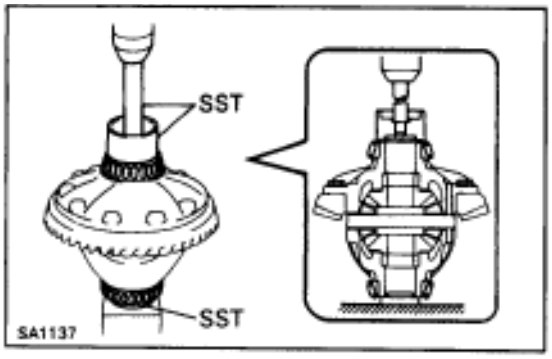

5. INSTALL SIDE BEARINGS

Using SST and a press, install the side bearings.
2JZ–GTE M/T:
SST 09608–35014 (09608–06020), 09710–30050, 09726–36010
Except 2JZ–GTE M/T:
SST 09608–35014 (09608–06020, 09608–06100), 09710–30050

6. INSTALL DRIVE PINION BEARING OUTER RACES AND ADJUSTING PLATE WASHER

NOTICE: Always reassemble with a new adjusting plate washer.
HINT: The adjusting plate washer is used for adjusting the tooth contact pattern. 42 types of washer with differential thicknesses are available.
First fit a washer with the same thickness as the washer which was removed, then after checking the tooth contact pattern, replace the washer with one of a different thickness if necessary.

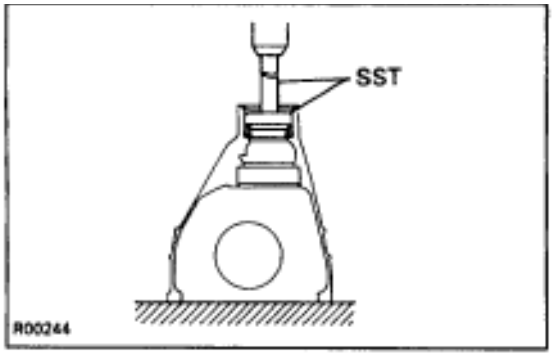

(a) Using SST and a press, install the front bearing outer race.
2JZ–GTE M/T:
SST 09502–24010, 09608–35014 (09608–06020)
Except 2JZ–GTE M/T:
SST 09608–35014 (09608–06020, 09608–06110)

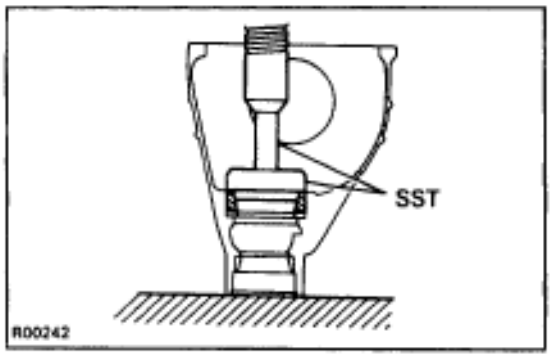

(b) Using SST and a press, install a new adjusting plate washer and the rear bearing outer race.
2JZ–GTE M/T:
SST 09608–35014 (09608–06020, 09608–06160)
Except 2JZ–GTE M/T:
SST 09250–10011 (09252–10010, 09255–10011)

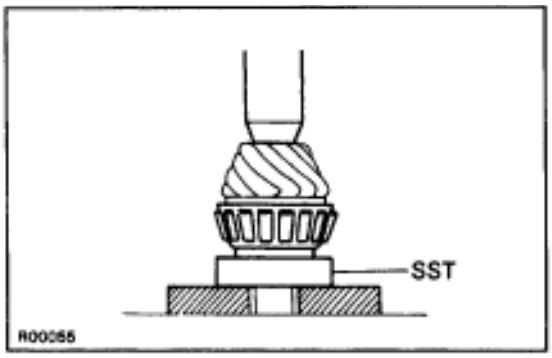

7. INSTALL REAR BEARING TO DRIVE PINION
Using SST and a press, install the rear bearing.
2JZ–GTE M/T:
SST 09316–20011
Except 2JZ–GTE M/T:
SST 09502–24010

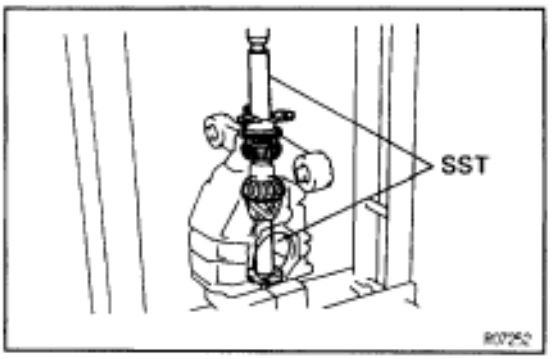

8. TEMPORARILY INSTALL DRIVE PINION, FRONT BEARING, (OIL SLINGER) AND COMPANION FLANGE
(a) Position the drive pinion in the differential carrier.
(b) Using SST and a press, install the front bearing, oil slinger (Except 2 JZ–GTE M / T) and companion flange.
SST 09608–30012 (09608–04030),
09608–35014 (09608–06040)
HINT: Assemble the spacer, oil slinger (2JZ–GTE M/ T) and oil seal after adjusting the tooth contact pattern.
NOTICE: Be careful not to press the bearing too far onto the drive pinion's bearing surface.

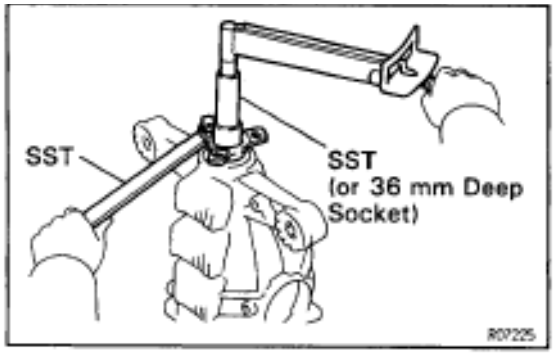

9. TEMPORARILY ADJUST DRIVE PINION PRELOAD

(a) Adjust the drive pinion preload by tightening the nut.
HINT: Using SST (and a 36 mm deep socket wrench) to hold the companion flange, tighten the nut.
SST 09229–55010 (Except 2JZ–GTE M/T),
09330–00021
NOTICE: As there is no spacer, tighten the nut a little at a time, being careful not to overtighten it.

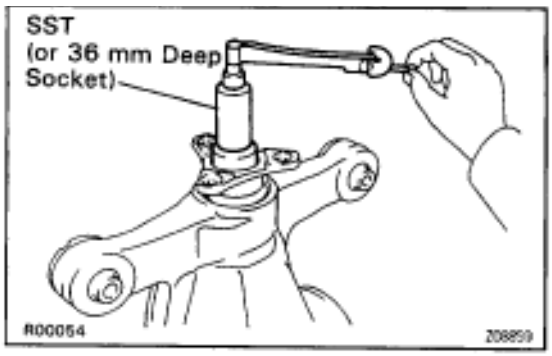

(b) Using SST (or a 36 mm deep socket) and a torque wrench, measure the drive pinion preload.
SST 09229–55010
Preload (at start):
New bearing
2JZ–GTE M/T
2.0–2.5 N·m (20–25 kgf·cm, 17.3–21.7 in.·lbf)
Except 2JZ–GTE M/T
1.2–1.8 N·m (12–18 kgf·cm, 10.8–16.0 in.·lbf)
Reused bearing
2JZ–GTE M/T
1.0–1.2 N·m (10–12 kgf·cm, 8.9–10.6 in.·lbf)
Except 2JZ–GTE M/T
0.5–0.8 N·m (5–8 kgf·cm, 4.3–6.9 in.·lbf)

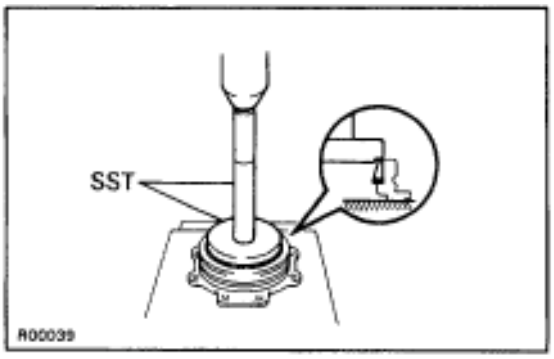

10. INSTALL SIDE BEARING OUTER RACE (AND ADJUST PLATE WASHER)
2JZ–GTE M/T:
Using SST and a press, press the outer race.
SST 09608–35014 (09608–06020, 09608–06150)
Except 2JZ–GTE M/T:
Using SST and a press, press the outer race and adjusting plate washer.
SST 09608–35014 (09608–06020, 09608–06210)

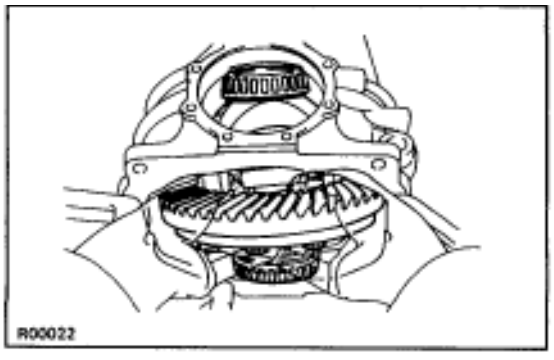

11. INSTALL DIFFERENTIAL CASE IN CARRIER
Install the drive side bearing in the differential carrier first, as shown in the illustration, then install the differential case.

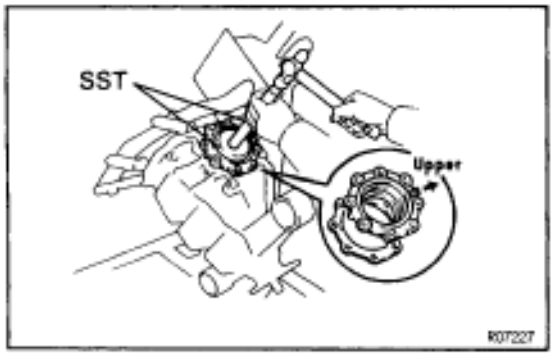

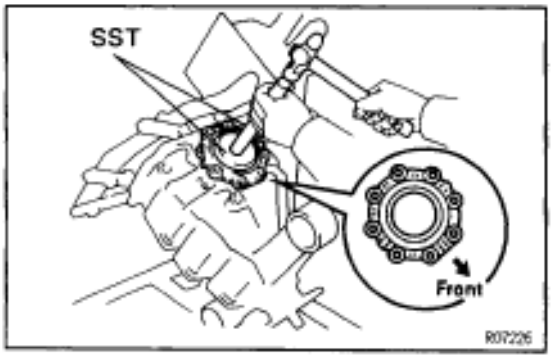

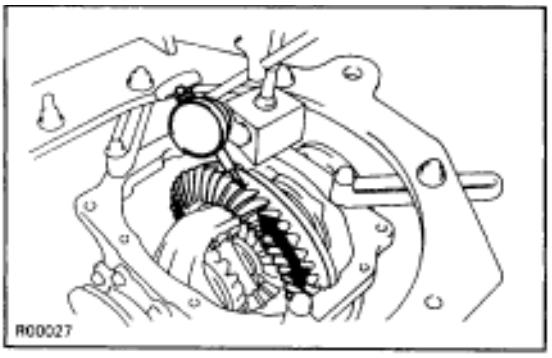

12. INSTALL (ADJUSTING PLATE WASHER AND) DIFFERENTIAL CARRIER RETAINERS

2JZ–GTE M/T:

(a) Place the adjusting washer to the carrier retainer.

(b) Using SST and hammer, install the carrier retainer with adjusting washer.
SST 09608–35014 (09608–06020, 09608–06150)
HINT: Do not install a new O–ring and a new oil seal. Install it after inspect tooth contact pattern.

(c) Tighten the 8 bolts.
Torque: 47 N·m (480 kgf·cm, 35 ft·lbf)

Except 2JZ–GTE M/T:

(a) Using SST and hammer, install the carrier retainer.
SST 09608–35014 (09608–06020, 09608–06180)

(b) Tighten the 8 bolts.
Torque: 22 N·m (225 kgf·cm, 16 ft·lbf)

13. CHECK RING GEAR BACKLASH

Using dial gauge, measure the backlash of the ring gear and drive pinion at 3 positions at least.
Backlash (average value):
0.08–0.13 mm (0.0031–0.0051 in.)
NOTICE: The difference between the maximum and minimum measured values must be less than 0.05 mm (0.0020 in.).
HINT: The measured values should be used for reference when selecting washers, so make a memo of the values.
If the backlash is not within the specification replace the washer on the ring gear side with one of a different thickness using the following procedure.

Adjusting washer thickness

2JZ–GTE M/T: mm (in.)

Thickness	Thickness	Thickness
1.18 (0.0465)	1.48 (0.0583)	1.78 (0.0701)
1.20 (0.0472)	1.50 (0.0591)	1.80 (0.0709)
1.22 (0.0480)	1.52 (0.0598)	1.82 (0.0717)
1.24 (0.0488)	1.54 (0.0606)	1.84 (0.0724)
1.26 (0.0496)	1.56 (0.0614)	1.86 (0.0732)
1.28 (0.0504)	1.58 (0.0622)	1.88 (0.0740)
1.30 (0.0512)	1.60 (0.0630)	1.90 (0.0748)
1.32 (0.0520)	1.62 (0.0638)	1.92 (0.0756)
1.34 (0.0528)	1.64 (0.0646)	1.08 (0.0425)
1.36 (0.0535)	1.66 (0.0654)	1.10 (0.0433)
1.38 (0.0543)	1.68 (0.0661)	1.12 (0.0441)
1.40 (0.0551)	1.70 (0.0669)	1.14 (0.0449)
1.42 (0.0559)	1.72 (0.0677)	1.16 (0.0457)
1.44 (0.0567)	1.74 (0.0685)	
1.46 (0.0575)	1.76 (0.0693)	

Except 2JZ–GTE M/T: mm (in.)

No.	Thickness	No.	Thickness	No.	Thickness
02	2.02 (0.0795)	32	2.32 (0.0913)	62	2.62 (0.1031)
04	2.04 (0.0803)	34	2.34 (0.0921)	64	2.64 (0.1039)
06	2.06 (0.0811)	36	2.36 (0.0929)	66	2.66 (0.1047)
08	2.08 (0.0819)	38	2.38 (0.0937)	68	2.68 (0.1055)
10	2.10 (0.0827)	40	2.40 (0.0945)	70	2.70 (0.1063)
12	2.12 (0.0835)	42	2.42 (0.0953)	72	2.72 (0.1071)
14	2.14 (0.0843)	44	2.44 (0.0961)	74	2.74 (0.1079)
16	2.16 (0.0850)	46	2.46 (0.0969)	76	2.76 (0.1087)
18	2.18 (0.0858)	48	2.48 (0.0976)	78	2.78 (0.1094)
20	2.20 (0.0866)	50	2.50 (0.0984)	80	2.80 (0.1102)
22	2.22 (0.0874)	52	2.52 (0.0992)	82	2.82 (0.1110)
24	2.24 (0.0882)	54	2.54 (0.1000)	84	2.84 (0.1118)
26	2.26 (0.0890)	56	2.56 (0.1008)	86	2.86 (0.1126)
28	2.28 (0.0898)	58	2.58 (0.1016)		
30	2.30 (0.0906)	60	2.60 (0.1024)		

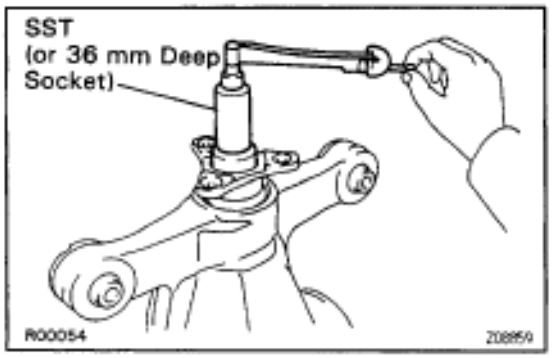

14. MEASURE TOTAL PRELOAD

Using SST (or a 36 mm deep socket) and a torque wrench, measure the total preload.

SST 09229–55010

Total preload (In addition to drive pinion preload):

New and Reused bearing

2JZ–GTE M/T

0.4–0.6 N·m (4–6 kgf·cm, 3.5–5.2 in.·lbf)

Except 2JZ–GTE M/T

0.5–0.8 N·m (5–8 kgf·cm, 4.3–6.9 in.·lbf)

If the measured preload is less than specification, replace the washer of the ring gear's tooth surface side with a thicker one.

If the preload is greater than the specification, replace the washer of the ring gear's tooth surface side with thinner one.

HINT: Changing the washer thickness by 0.02 mm (0.0008 in.) will change the total preload by approx. 0.1 N·m (1 kgf·cm, 0.9 in.·lbf).

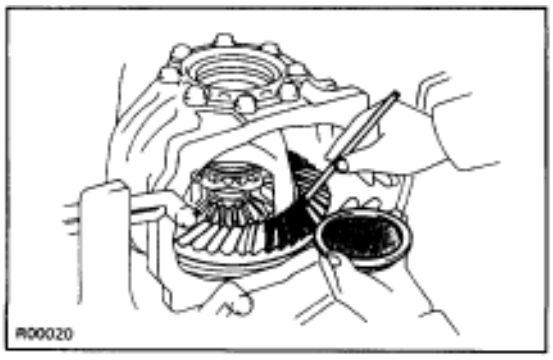

15. INSPECT TOOTH CONTACT PATTERN

(a) Coat 3 or 4 teeth at 3 different positions on the ring gear with red lead.

(b) Hold the companion flange firmly and rotate the ring gear in both directions.

(c) Inspect the tooth contact pattern.

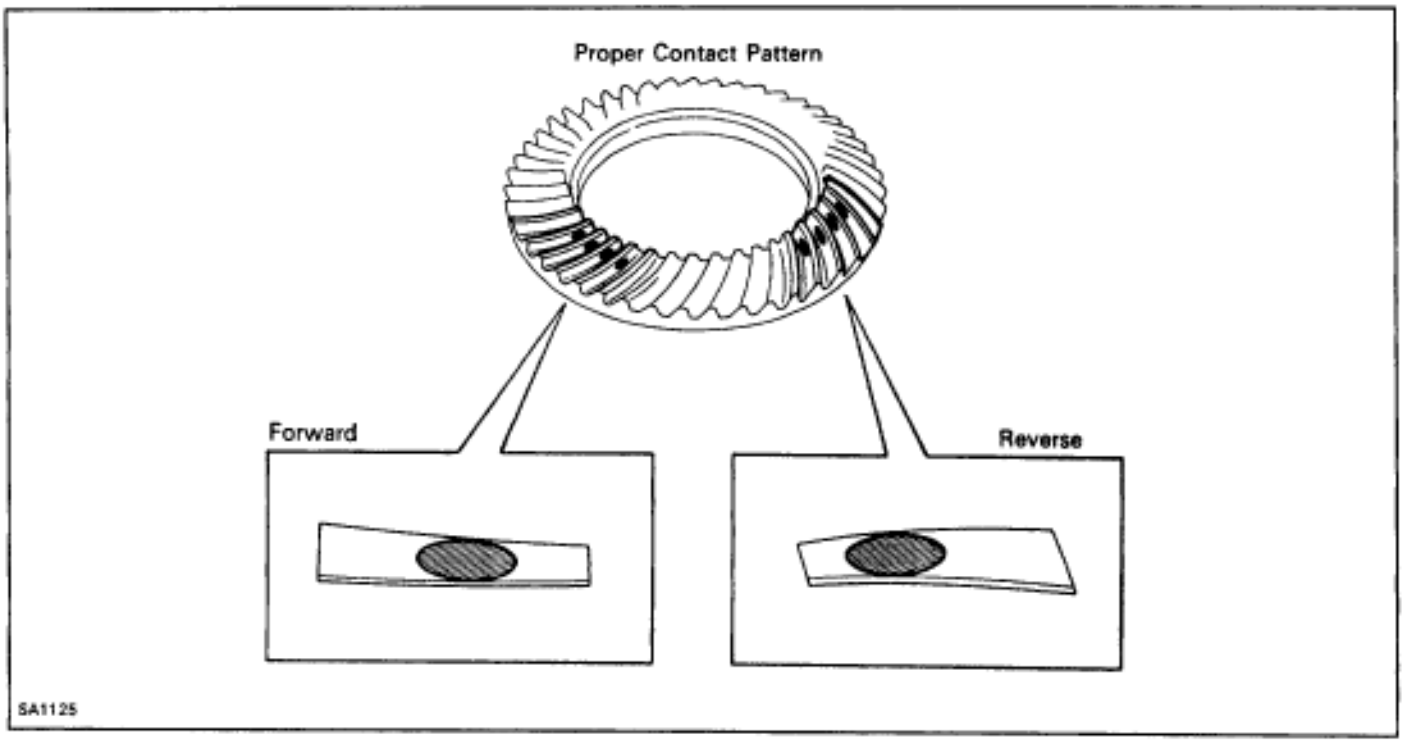

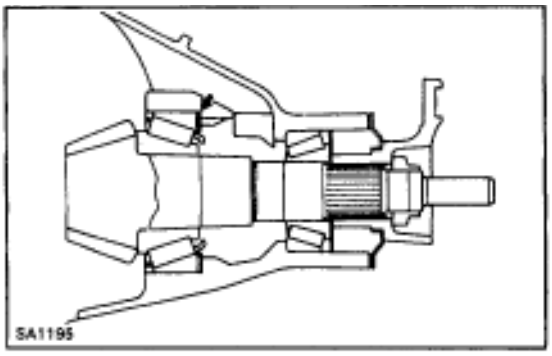

If tooth contact pattern is not correct, replace the adjusting washer installed on the front of the drive pinion rear bearing to adjust it.

NOTICE: Be sure to always use a new part when replacing adjusting washer.

HINT: Refer to the table below for selection of the adjusting washer.

Tooth contact pattern		Adjusting washer selection	
Forward	Reverse		
 SA1117	 SA1121	+ 0.08 mm (+ 0.0031 in.)	Replacing the washer with one 0.08 mm (0.0031 in.) thicker will give proper contact pattern.
 SA1118	 SA1124	+ 0.14 mm (+ 0.0055 in.)	Replacing the washer with one 0.14 mm (0.0055 in.) thicker will give proper contact pattern.
 SA1119	 SA1123	+ 0.08 mm (+ 0.0031 in.)	Replacing the washer with one 0.08 mm (0.0031 in.) thicker will give proper contact pattern.
 SA1120	 SA1122	+ 0.14 mm (+ 0.0055 in.)	Replacing the washer with one 0.14 mm (0.0055 in.) thicker will give proper contact pattern.

HINT: Adjust washer are available in 42 different thicknesses, in increments of 0.01 mm (0.004 in.).

Adjusting washer thickness

2JZ–GTE M/T: mm (in.)

No.	Thickness	No.	Thickness	No.	Thickness	No.	Thickness
80	1.80 (0.0709)	91	1.91 (0.0752)	02	2.02 (0.0795)	13	2.13 (0.0839)
81	1.81 (0.0713)	92	1.92 (0.0756)	03	2.03 (0.0799)	14	2.14 (0.0843)
82	1.82 (0.0717)	93	1.93 (0.0760)	04	2.04 (0.0803)	15	2.15 (0.0846)
83	1.83 (0.0720)	94	1.94 (0.0764)	05	2.05 (0.0807)	16	2.16 (0.0850)
84	1.84 (0.0724)	95	1.95 (0.0768)	06	2.06 (0.0811)	17	2.17 (0.0854)
85	1.85 (0.0728)	96	1.96 (0.0772)	07	2.07 (0.0815)	18	2.18 (0.0858)
86	1.86 (0.0732)	97	1.97 (0.0776)	08	2.08 (0.0819)	77	1.77 (0.0697)
87	1.87 (0.0736)	98	1.98 (0.0780)	09	2.09 (0.0823)	78	1.78 (0.0701)
88	1.88 (0.0740)	99	1.99 (0.0783)	10	2.10 (0.0827)	79	1.79 (0.0705)
89	1.89 (0.0744)	00	2.00 (0.0787)	11	2.11 (0.0831)		
90	1.90 (0.0748)	01	2.01 (0.0791)	12	2.12 (0.0835)		

Except 2JZ–GTE M/T: mm (in.)

No.	Thickness	No.	Thickness	No.	Thickness	No.	Thickness
87	1.87 (0.0736)	98	1.98 (0.0780)	09	2.09 (0.0823)	20	2.20 (0.0866)
88	1.88 (0.0740)	99	1.99 (0.0783)	10	2.10 (0.0827)	21	2.21 (0.0870)
89	1.89 (0.0744)	00	2.00 (0.0787)	11	2.11 (0.0831)	22	2.22 (0.0874)
90	1.90 (0.0748)	01	2.01 (0.0791)	12	2.12 (0.0835)	23	2.23 (0.0878)
91	1.91 (0.0752)	02	2.02 (0.0795)	13	2.13 (0.0839)	24	2.24 (0.0882)
92	1.92 (0.0756)	03	2.03 (0.0799)	14	2.14 (0.0843)	25	2.25 (0.0886)
93	1.93 (0.0760)	04	2.04 (0.0803)	15	2.15 (0.0846)	26	2.26 (0.0890)
94	1.94 (0.0764)	05	2.05 (0.0807)	16	2.16 (0.0850)	27	2.27 (0.0894)
95	1.95 (0.0768)	06	2.06 (0.0811)	17	2.17 (0.0854)	28	2.28 (0.0898)
96	1.96 (0.0772)	07	2.07 (0.0815)	18	2.18 (0.0858)		
97	1.97 (0.0776)	08	2.08 (0.0819)	19	2.19 (0.0862)		

16. **REMOVE DIFFERENTIAL RETAINER, DIFFERENTIAL CASE AND DRIVE PINION**
(See page SA–66, 67)

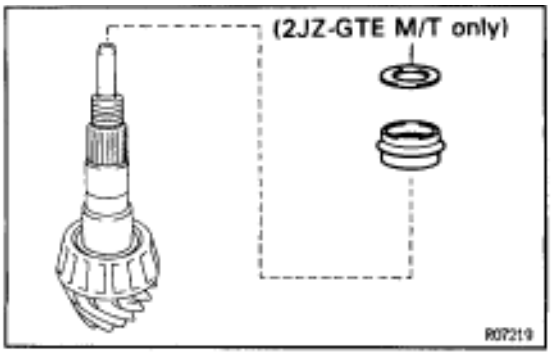

17. **INSTALL SPACER (AND OIL SLINGER) ON DRIVE PINION**
Install a new spacer and the oil slinger (2JZ–GTE M/ T only) on the drive pinion.
18. **POSITION DRIVE PINION IN DIFFERENTIAL CARRIER**
(See page SA–72)
19. **INSTALL FRONT BEARING (AND OIL SLINGER)**
(See page SA–72)

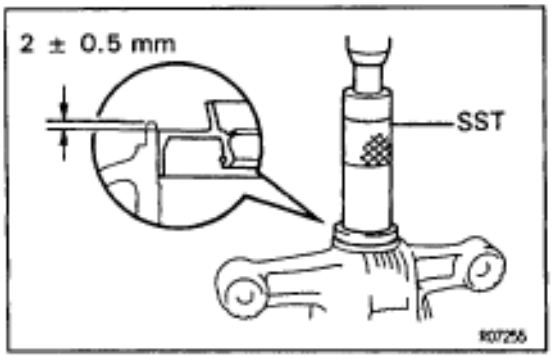

20. INSTALL OIL SEAL

(a) Using SST, install a new oil seal to the differential carrier.
2JZ–GTE M/T:
SST 09316–60010 (09316–00010, 09316–00070), 09502–24010

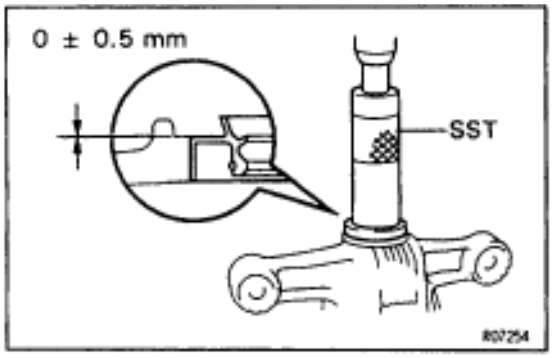

Except 2JZ–GTE M/T:
SST 09316–60010 (09316–00010, 09316–00040), 09502–12010

(b) Apply the MP grease to a new oil seal lip.

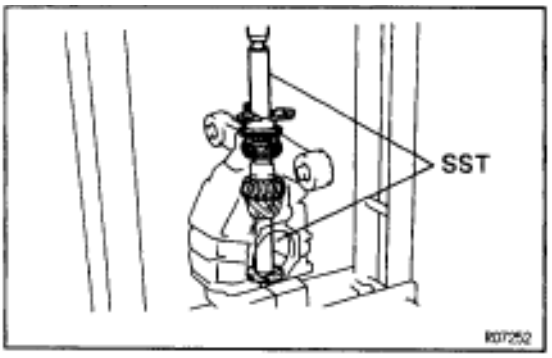

21. INSTALL COMPANION FLANGE

Using SST and a press, install the companion flange.
SST 09608–30012 (09608–04030), 09608–35014 (09608–06040)

NOTICE:

- **Be careful not to damage the oil seal.**
- **Be careful not to press the bearing too far onto the drive pinion's bearing surface.**

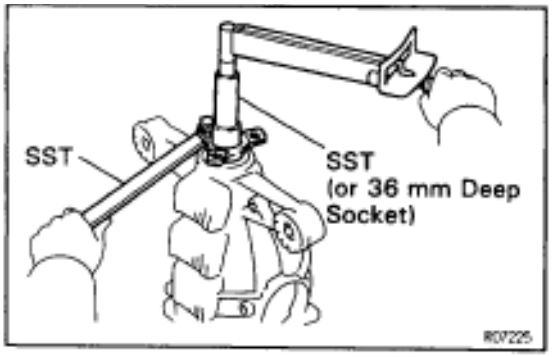

22. ADJUST DRIVE PINION PRELOAD

(a) Coat the drive pinion's threads and a new nut's flange with hypoid gear oil for LSD.

(b) Using SST (and a 36 mm deep socket wrench), tighten the nut.
SST 09229–55010 (Except 2JZ–GTE M/T only), 09330–00021

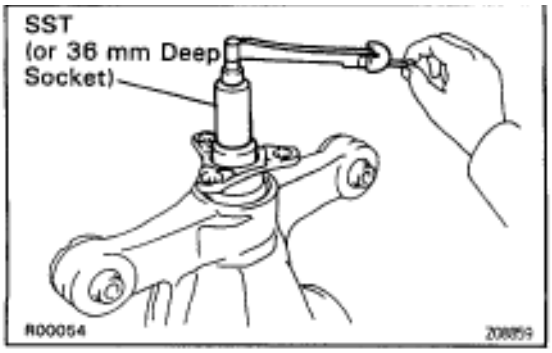

(c) Using SST (or a 36 mm deep socket) and a torque wrench, measure the drive pinion preload.
SST 09229–55010

Preload (at starting):

New bearing

2JZ–GTE M/T

2.0–2.5 N·m (20–25 kgf·cm, 17.3–21.7 in.·lbf)

Except 2JZ–GTE M/T

1.2–1.8 N·m (12–18 kgf·cm, 10.8–16.0 in.·lbf)

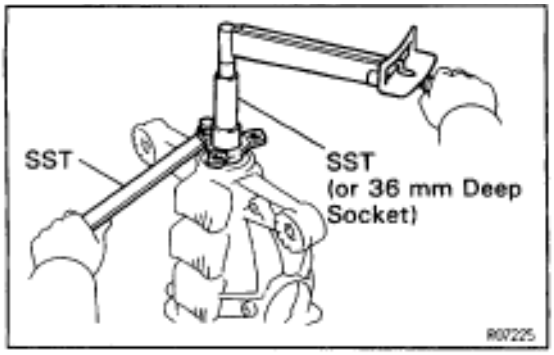

Reused bearing

2JZ–GTE M/T

1.0–1.2 N·m (10–12 kgf·cm, 8.9–10.6 in.·lbf)

Except 2JZ–GTE M/T

0.5–0.8 N·m (5–8 kgf·cm, 4.3–6.9 in.·lbf)

- If the preload is greater than the specification, replace the spacer and repeat the preload procedure.
- If the preload is less than the specification, retighten the nut 13 NVm (130 kgfVcm, 9 ftVlbf) at a time until the specified preload is reached.

Maximum torque:

2JZ–GTE M/T

510 N·m (5,200 kgf·cm, 376 ft·lbf)

Except 2JZ–GTE M/T

490 N·m (5,000 kgf·cm, 362 ft·lbf)

If the maximum torque is exceeded while retightening the nut, replace the spacer and repeat the preload procedure. Do not back off the nut to reduce the preload.

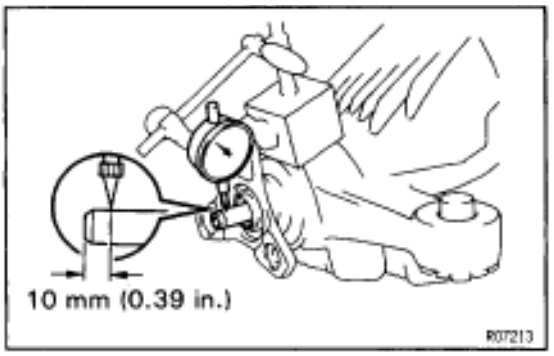

23. CHECK DRIVE PINION SHAFT RUNOUT

Measure the drive pinion shaft runout at a point 10 mm (0.39 in.) from the end of the shaft.

Maximum runout:

0.08 mm (0.0031 in.)

24. INSTALL DIFFERENTIAL CASE IN CARRIER

(See page SA–73)

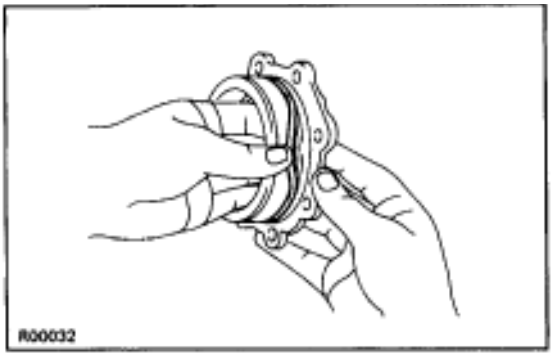

25. INSTALL O–RING

(a) Coat a new O–ring with hypoid gear oil.

(b) Install the O–ring to the carrier retainer.

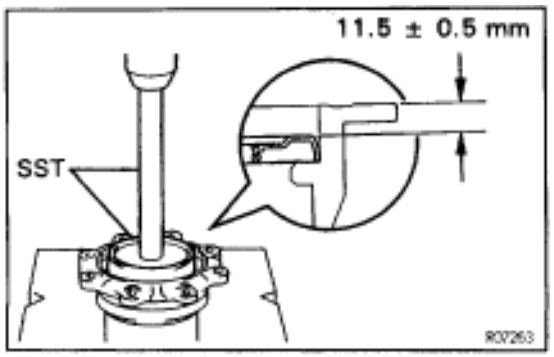

26. INSTALL OIL SEAL

(a) Using SST and a press, install a new oil seal to the carrier retainer.

2JZ–GTE M/T:

SST 09223–15030, 09608–35014 (09608–06020)

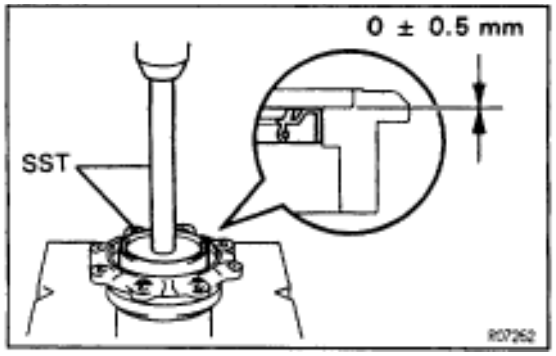

Except 2JZ–GTE M/T:
SST 09608–32010, 09608–35014 (09608–06020)

(b) Coat MP grease to the oil seal lip.

27. INSTALL SIDE BEARING RETAINER
(See page SA–74)

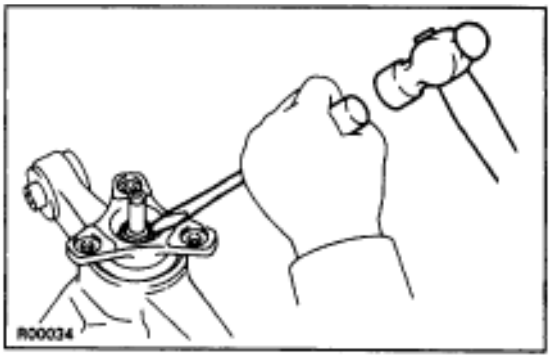

28. STAKE NUT
NOTICE: Do not damage the drive pinion.

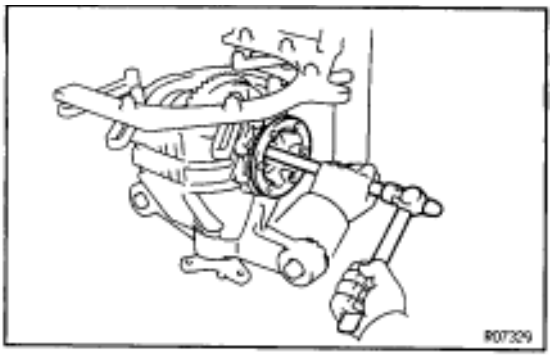

29. INSTALL BOTH GEAR SHAFTS

(a) Install a new snap ring to the shaft.

(b) Coat MP grease onto the snap ring.

(c) Using a hammer and brass bar, install both side gear shafts.
NOTICE: Be careful not to damage the side gear shaft and the oil seal.
HINT: Whether or not the side gear shaft is making contact with the pinion shaft can be known by the sound or feeling when driving it in.

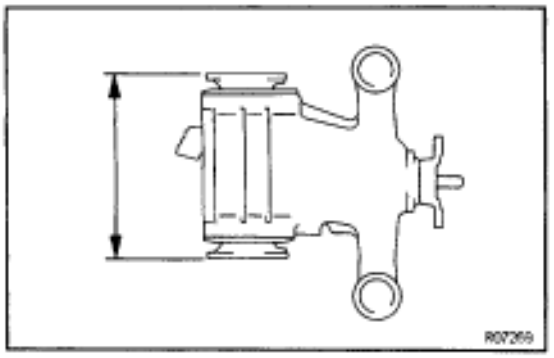

30. INSPECT DIFFERENTIAL CARRIER
Using vernier calipers, measure the distance between the mating surfaces of the 2 side gear shafts, as shown.
Standard Distance:
2JZ–GTE M/T
293.4 ± 0.65 mm
Except 2JZ–GTE M/T
281.8 ± 0.95 mm

31. RECHECK BACKLASH, TOTAL PRELOAD AND TOOTH CONTACT PATTERN

32. REMOVE DIFFERENTIAL CARRIER FROM OVERHAUL STAND, ETC.

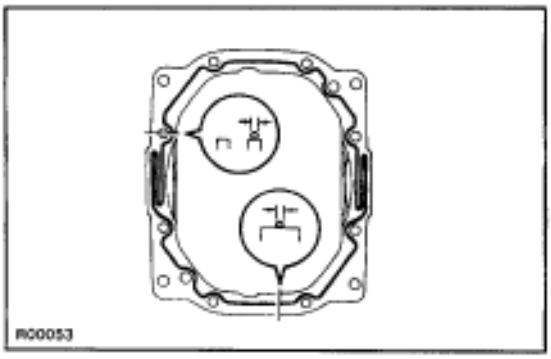

33. INSTALL DIFFERENTIAL CARRIER COVER

(a) Clean the contact surfaces of the carrier and cover of any residual FIPG material using cleaner.

(b) Coat the FIPG to the carrier or cover.

FIPG:

Part No. 08826–00090. THREE BOND 1281 or equivalent

NOTICE: After installing the cover, wait at least 1 hour before filling it with oil or running the vehicle.

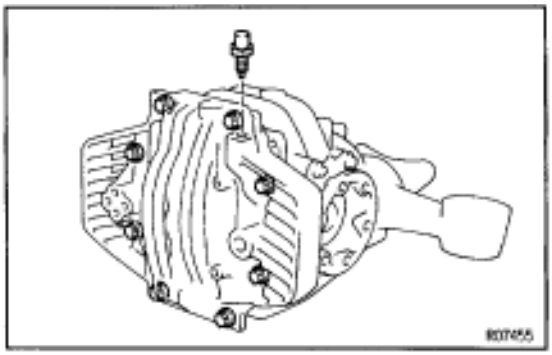

(c) Install the carrier cover to the carrier with the 8 bolts.

Torque:

2JZ–GTE M/0T

78 N·m (800 kgf·cm, 58 ft·lbf)

Except 2JZ–GTE M/T

47 N·m (475 kgf·cm, 34 ft·lbf)

(d) Install the breather plug.

Torque: 21 N·m (210 kgf·cm, 15 ft·lbf)

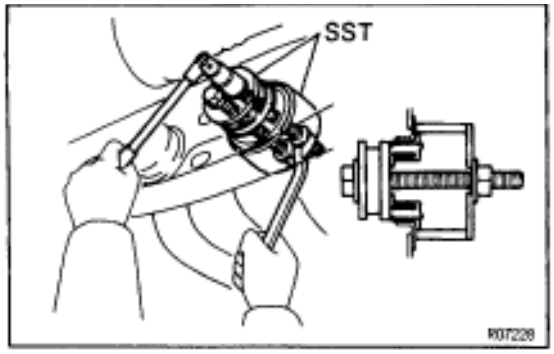

DIFFERENTIAL MOUNTING CUSHION REPLACEMENT

1. **DIFFERENTIAL ASSEMBLY REMOVAL**
   (See page SA–60)
2. **REMOVE DIFFERENTIAL MOUNT CUSHION**
   Using SST, remove the differential mount cushion.
   SST 09316–12010, 09570–24010

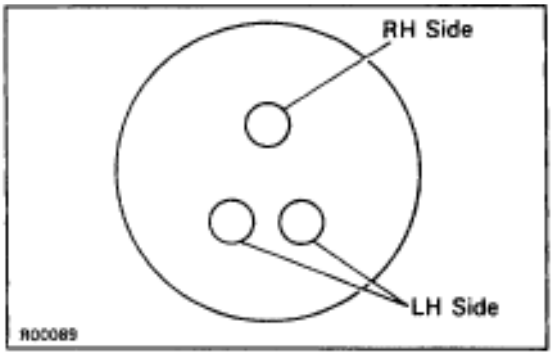

NOTICE:

- **When driving out the mount cushion, be careful not to touch the member with the SST.**
- **Align the SST straight so that the bolt of the SST is parallel with the center line of the mount cushion.**
- **When installing the bolts to the LH and RH differential mount cushions, make sure the bolts are passed through the correct holes in the SST, as shown in the illustration.**

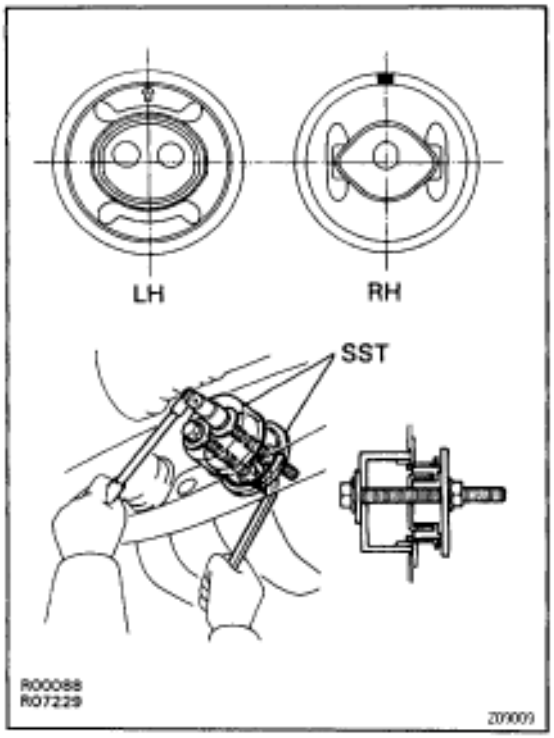

3. **INSTALL DIFFERENTIAL MOUNT CUSHION**
   Using SST, install the cushion so that the marks are positioned, as shown in the illustration.
   SST 09570–24010
   NOTICE:
   - **Do not make a mistake with left and right sides or top and bottom.**
   - **Set the SST after temporarily installing the differential mount cushion into the member so as not to be installed at an angle.**
   - **To confirm that the differential mount cushion is aligned straight in relation to the member, check that the SST is fully in contact with all of the cushion.**
4. **DIFFERENTIAL ASSEMBLY INSTALLATION**
   (See page SA–60)

REAR SUSPENSION

PREPARATION

SST (SPECIAL SERVICE TOOLS)

	09506–35010	Differential Drive Pinion Rear Bearing Replacer	Strut rod bushing replacement
	09610–20012	Pitman Arm Puller	
	09628–10011	Ball Joint Puller	
	09628–62011	Ball Joint Puller	
	09710–26010	Front Suspension Bushing Tool Set	Upper suspension arm bushing replacement
	(09710–05050)	Remover	
	(09710–05070)	Front Base	
	09710–30020	Suspension Bushing Tool Set	Upper suspension arm bushing replacement
	(09710–03030)	Front Suspension Upper Arm Bushing Remover	
	(09710–03120)	Rear Suspension Upper & Lower Arm Bushing Removing Base	
	09727–30020	Coil Spring Compressor	

RECOMMENDED TOOLS

	09025–00010 Torque Wrench (30 kgf·cm).	

EQUIPMENT

Torque wrench	

REAR SHOCK ABSORBER COMPONENTS

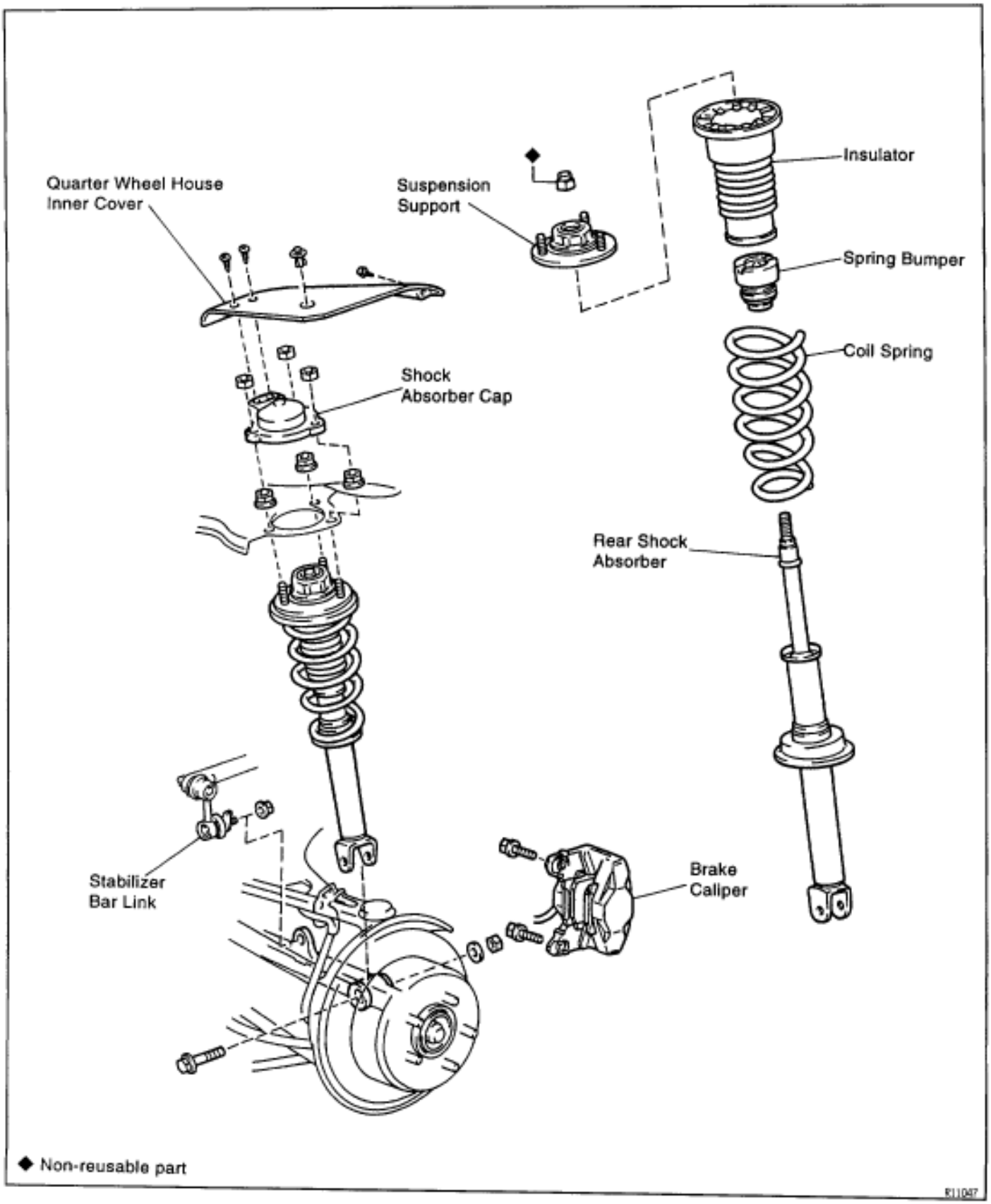

REAR SHOCK ABSORBER REMOVAL

Installation is in the reverse order of removal.

INSTALLATION HINT: After installation, check rear wheel alignment.

(See page SA–9)

1. w/ SPORT ROOF:

REMOVE THESE PARTS:
(See BO section)

- Rear seat cushion and Rear seat back
- Tonneau cover retainer
- Holder garnish and Holder
- Speaker grill and Quarter trim

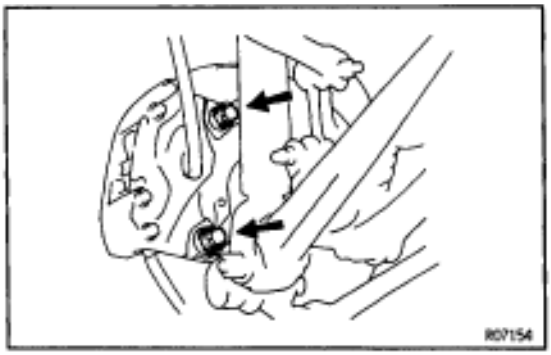

2. REMOVE REAR WHEEL

Torque: 103 N·m (1,050 kgf·cm, 76 ft·lbf)

3. REMOVE REAR BRAKE CALIPER

(a) Remove the 2 bolts and brake caliper from the rear axle carrier.

Torque: 104 N·m (1,065 kgf·cm, 77 ft·lbf)

(b) Support the brake caliper securely.

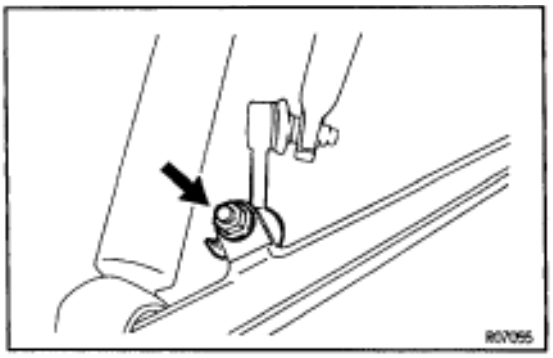

4. DISCONNECT REAR STABILIZER BAR LINK

Remove the nut and disconnect the stabilizer bar link from the lower suspension arm No.2.

Torque: 74 N·m (750 kgf·cm, 54 ft·lbf)

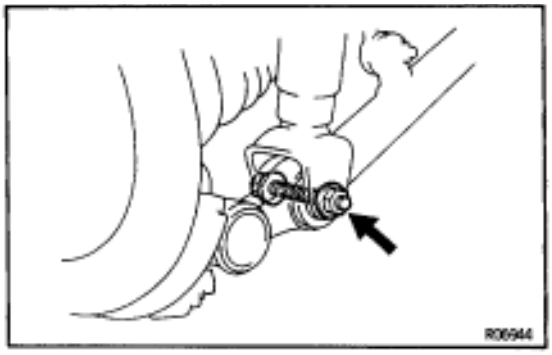

5. REMOVE SHOCK ABSORBER WITH COIL SPRING

(a) Remove the nut and bolt on lower side of the shock absorber.

Torque: 137 N·m (1,400 kgf·cm, 101 ft·lbf)

INSTALLATION HINT: After stabilizing the suspension, torque the nut.

(b) Remove the quarter wheel house inner cover.

(c) Remove the 3 nuts and the shock absorber cap.

Torque: 10 N·m (105 kgf·cm, 8 ft·lbf)

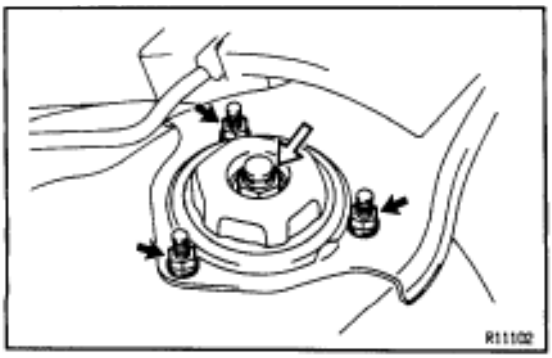

(d) Loosen the nut in the middle of the suspension support.

REMOVAL NOTICE: Do not remove the nut.

Torque: 27 N·m (280 kgf·cm, 20 ft·lbf)

(e) Remove the 3 nuts and shock absorber with the coil spring.

Torque: 26 N·m (260 kgf·cm, 19 ft·lbf)

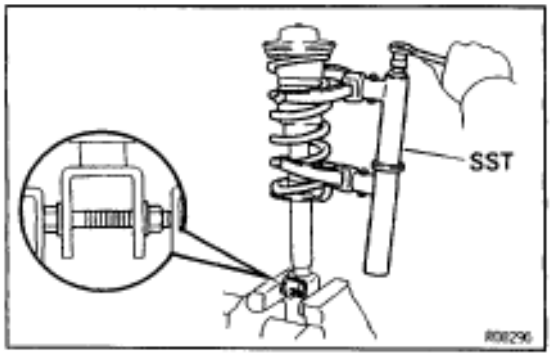

REAR SHOCK ABSORBER DISASSEMBLY

1. REMOVE SUSPENSION SUPPORT AND COIL SPRING

(a) Using SST, compress the coil spring.
SST 09727–30020
NOTICE: Do not use an impact wrench. It will damage the SST.

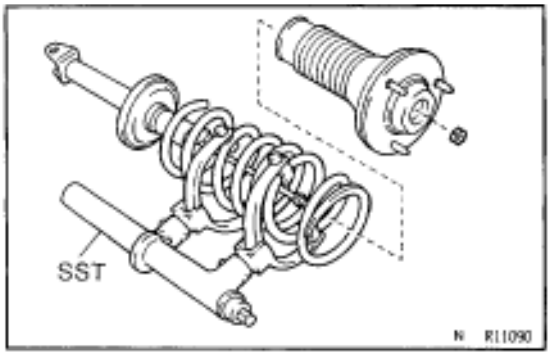

(b) Remove the suspension support nut.
(c) Remove the suspension support, coil spring and insulator.

2. REMOVE INSULATOR AND SPRING BUMPER

Remove the insulator and spring bumper from the suspension support.

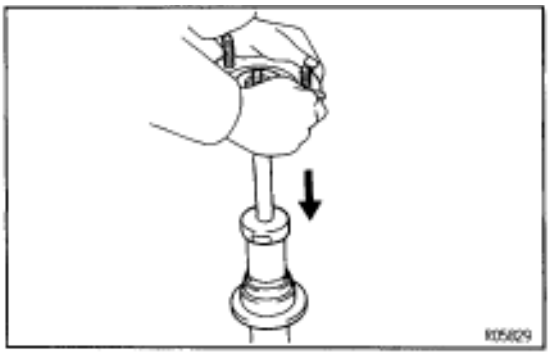

REAR SHOCK ABSORBER INSPECTION

INSPECT SHOCK ABSORBER

Compress and extend the shock absorber rod and check that there is no abnormal resistance or unusual operation sounds.
If there is any abnormality, replace the shock absorber with a new one.
NOTICE: When discarding the shock absorber, use the following procedure.

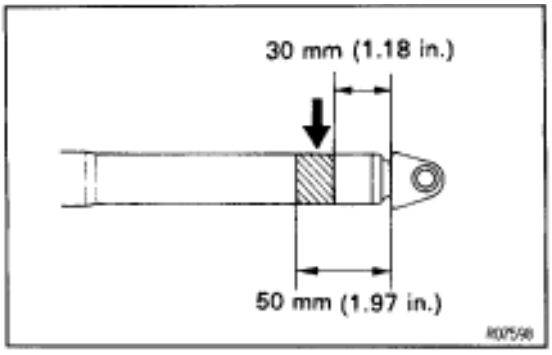

REAR SHOCK ABSORBER DISPOSAL

1. FULLY EXTEND SHOCK ABSORBER ROD

2. DRILL HOLE TO REMOVE GAS FROM CYLINDER

Using a drill, make a hole in the cylinder within the shaded region to remove the gas inside.
CAUTION: The gas coming out is harmless, but be careful of chips which may fly up when drilling.

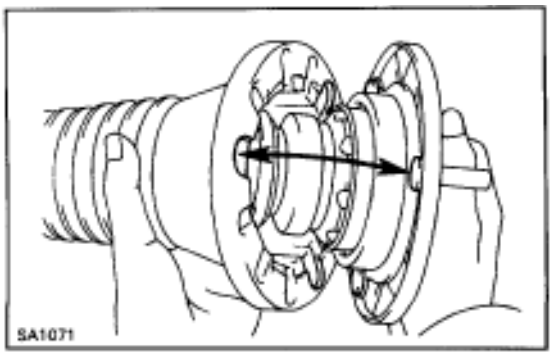

REAR SHOCK ABSORBER ASSEMBLY

1. INSTALL SUSPENSION SUPPORT AND COIL SPRING

(a) Install the spring bumper to the suspension support.
(b) Install the insulator to the suspension support.
HINT: Match the bolt of the suspension support with the cut–off part of the insulator.

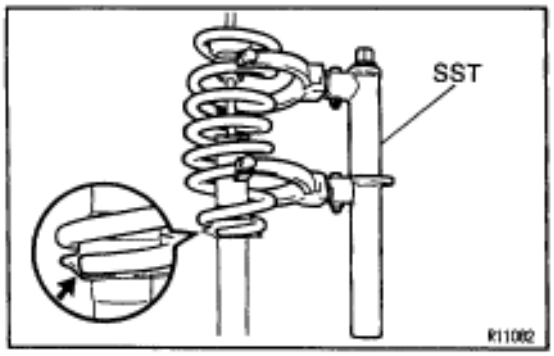

2. INSTALL COIL SPRING AND SUSPENSION SUPPORT

(a) Using SST, compress the coil spring.
SST 09727–30020
NOTICE: Do not use an impact wrench. It will damage the SST.

(b) Install the coil spring to the shock absorber.
HINT: Fit the lower end of the coil spring into the recess of the shock absorber's spring seat.

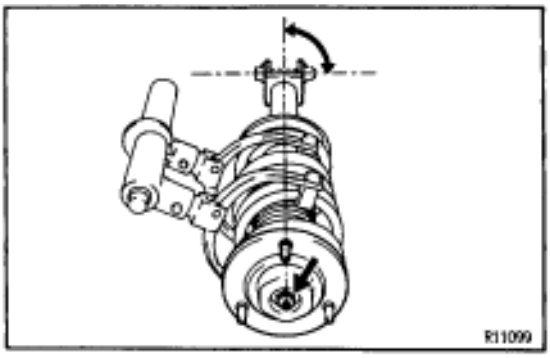

(c) Install the suspension support to the rod and temporarily tighten a new nut.

(d) Rotate the suspension support so that the rod and one of the bolts on suspension support are aligned with the lower bracket.

(e) Remove the SST.
HINT: After removing the SST, again check the direction of the suspension support.

UPPER SUSPENSION ARM COMPONENTS

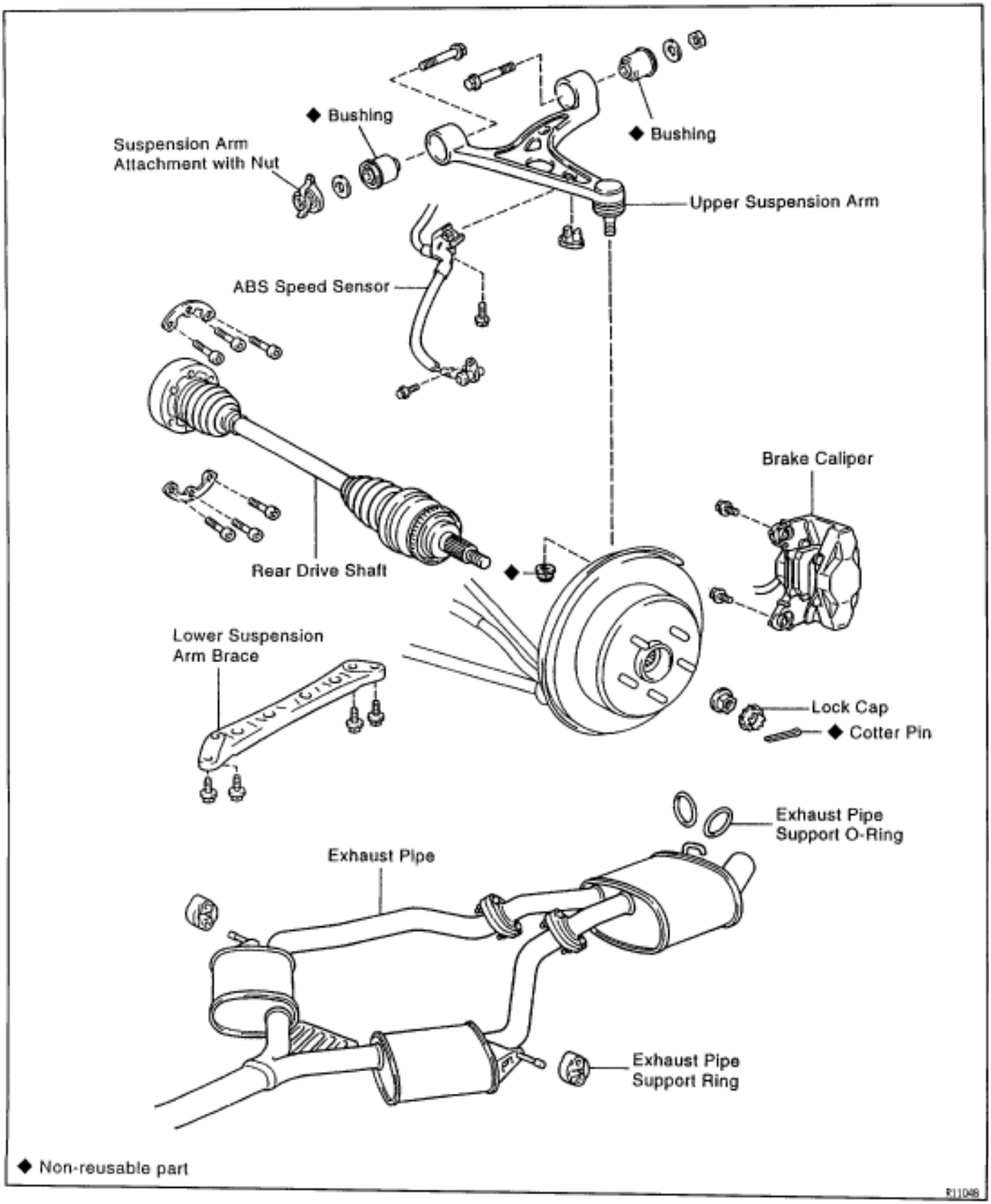

UPPER SUSPENSION ARM REMOVAL

Installation is in the reverse order of removal.

INSTALLATION HINT: After installation, check ABS speed sensor signal and rear wheel alignment.

(See page BR–62 and SA–9)

1. **REMOVE REAR WHEEL**

Torque: 103 N·m (1,050 kgf·cm, 76 ft·lbf)

2. **REMOVE REAR DRIVE SHAFT**

(See page SA–46)

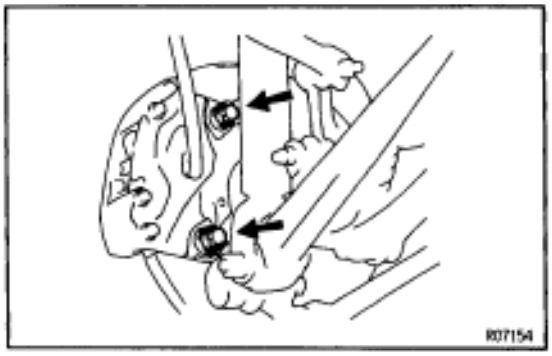

3. **REMOVE REAR BRAKE CALIPER**

(a) Remove the 2 bolts and brake caliper from the rear axle carrier.

Torque: 104 N·m (1,065 kgf·cm, 77 ft·lbf)

(b) Support the brake caliper securely.

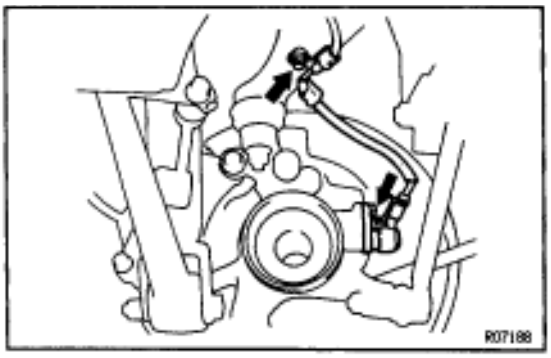

4. **DISCONNECT ABS SPEED SENSOR AND WIRE HARNESS**

(a) Remove the bolt and disconnect the speed sensor from the axle carrier.

Torque: 8 N·m (80 kgf·cm, 69 in.·lbf)

(b) Remove the bolt and disconnect the speed sensor wire harness clamp from the upper suspension arm.

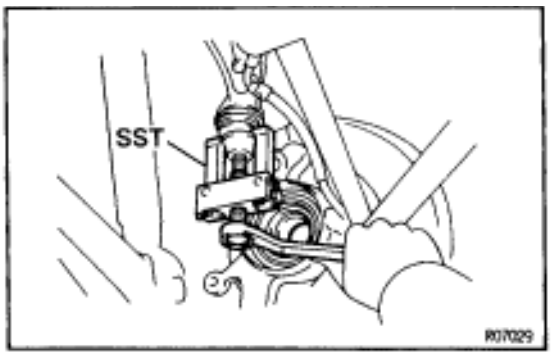

5. **REMOVE UPPER SUSPENSION ARM**

(a) Remove the nut from the upper suspension arm.

Torque: 109 N·m (1,100 kgf·cm, 80 ft·lbf)

(b) Using SST, disconnect the upper suspension arm from the axle carrier.

SST 09628–62011

NOTICE: Be careful not to damage the dust cover.

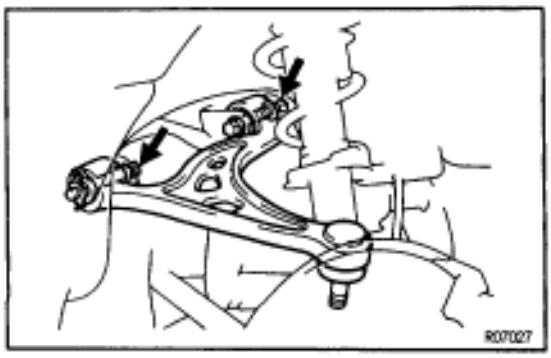

(c) Remove the bolts, nuts and upper suspension arm.

Torque: 164 N·m (1,670 kgf·cm, 121 ft·lbf)

INSTALLATION HINT: After stabilizing the suspension, torque the bolt and nut.

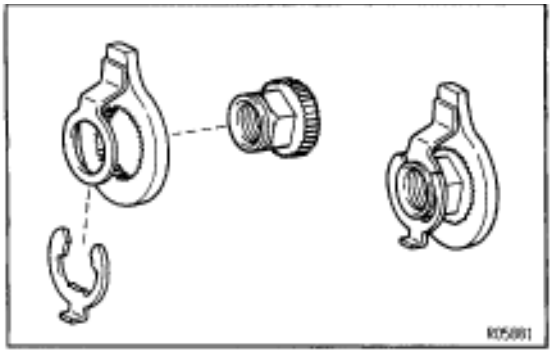

INSTALLATION HINT: If replacing the front nut, assemble the nut and E–ring to the washer with lock protrusion before installing.

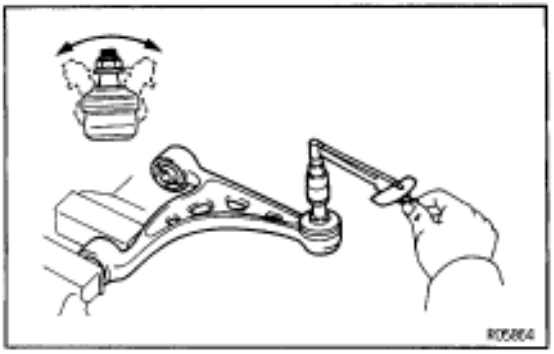

UPPER SUSPENSION ARM BALL JOINT INSPECTION

INSPECT BALL JOINT FOR ROTATION CONDITION

(a) Flip the ball joint stud back and forth 5 times, as shown in the illustration, before installing the nut.

(b) Using torque wrench, turn the nut continuously one turn every 2–4 seconds and take the torque reading on the 5th turn.

Torque (turning):

1.0–3.4 N·m (10–35 kgf·cm, 9–30 in.·lbf)

If not with in specification, replace the upper suspension arm.

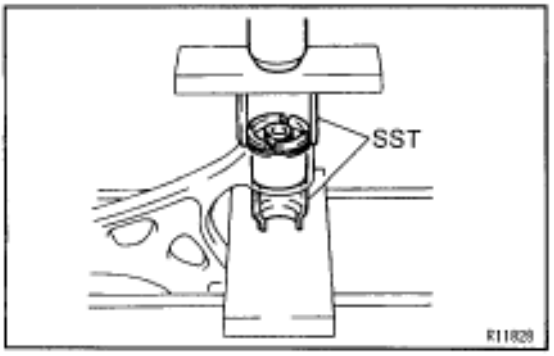

UPPER SUSPENSION ARM BUSHING REPLACEMENT

1. REMOVE BUSHING

Using SST, press out the bushing.

SST 09710–26010 (09710–05070),
09710–30020 (09710–03030)

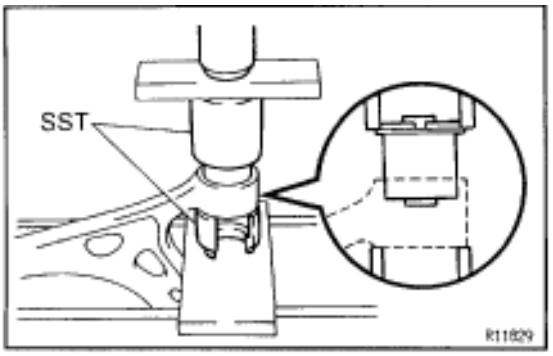

2. INSTALL NEW BUSHING

Using SST, press in a new bushing.

SST 09710–26010 (09710–05050),
09710–30020 (09710–03120)

LOWER SUSPENSION ARM AND STRUT ROD
COMPONENTS

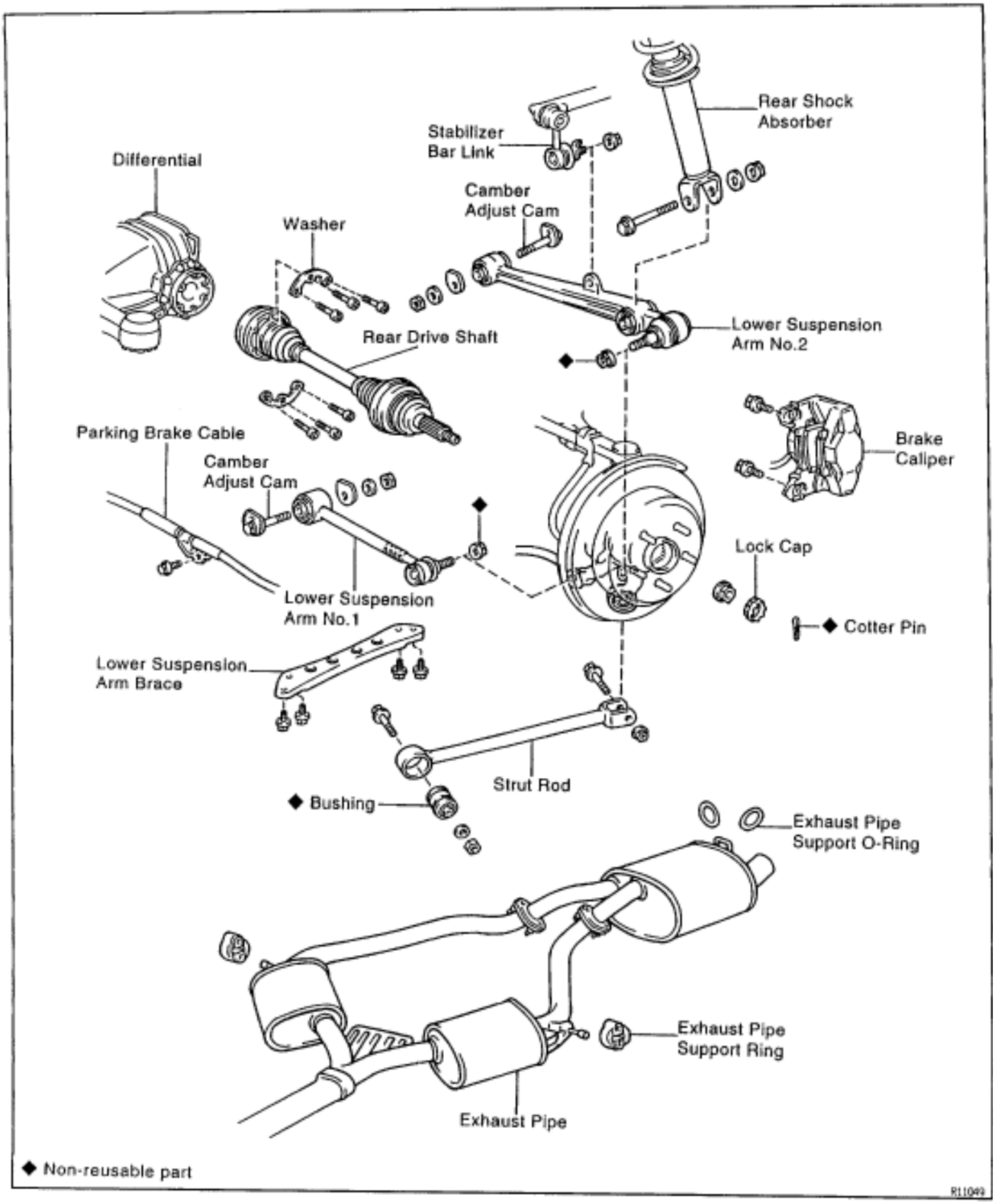

LOWER SUSPENSION ARM AND STRUT ROD REMOVAL

Installation is in the reverse order of removal.

INSTALLATION HINT: After installation, check ABS speed sensor signal and rear wheel alignment.

(See page BR–62 and SA–9)

1. REMOVE REAR WHEEL

Torque: 103 N·m (1,050 kgf·cm, 76 ft·lbf)

2. REMOVE REAR DRIVE SHAFT

(See page SA–46)

3. REMOVE REAR BRAKE CALIPER

(a) Remove the 2 bolts and brake caliper from the rear axle carrier.

Torque: 104 N·m (1,065 kgf·cm, 77 ft·lbf)

(b) Support the brake caliper securely.

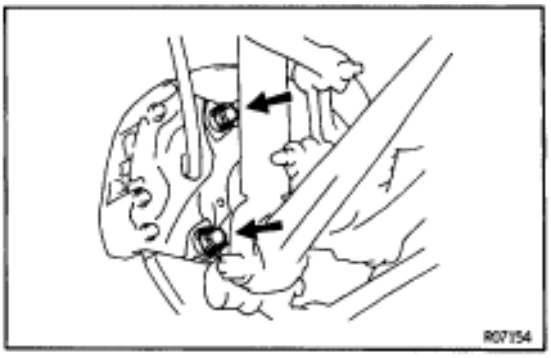

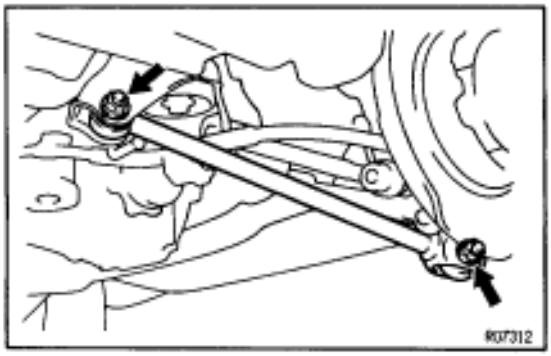

4. REMOVE STRUT ROD

Remove the 2 bolts, nuts and strut rod.

Torque: 184 N·m (1,880 kgf·cm, 134 ft·lbf)

INSTALLATION HINT: After stabilizing the suspension, torque the bolts.

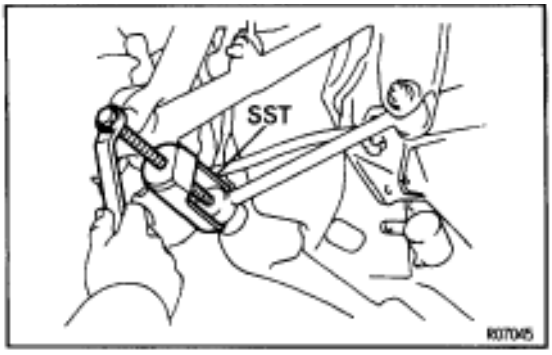

5. REMOVE LOWER SUSPENSION ARM NO.1

(a) Remove the nut.

Torque: 59 N·m (600 kgf·cm, 43 ft·lbf)

(b) Using SST, disconnect the lower suspension arm No.1 from the rear axle carrier.

SST 09610–20012

NOTICE: Be careful not to damage the dust boot.

(c) Remove the bolt and disconnect the parking brake cable bracket.

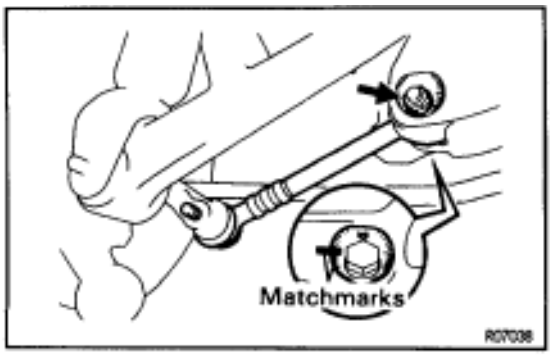

(d) Place matchmarks on the adjusting cam and subframe.

(e) Remove the adjusting cam and nut.

Torque: 184 N·m (1,880 kgf·cm, 134 ft·lbf)

INSTALLATION HINT: After stabilizing the suspension, torque the nut.

(f) Remove the lower suspension arm No.1.

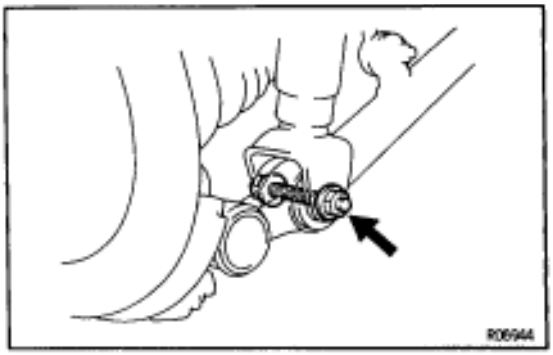

6. REMOVE LOWER SUSPENSION ARM NO.2

(a) Remove the bolt, nut and disconnect the shock absorber from the lower suspension arm No.2.
Torque: 137 N·m (1,400 kgf·cm, 101 ft·lbf)
INSTALLATION HINT: After stabilizing the suspension, torque the nuts.

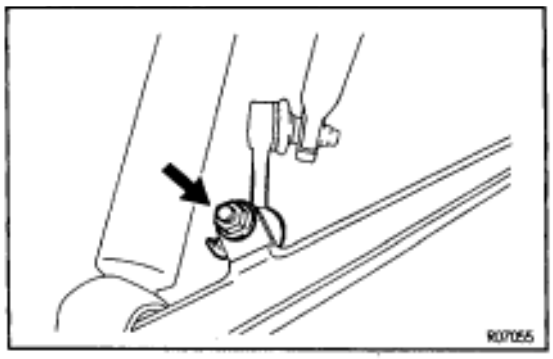

(b) Remove the nut and disconnect the stabilizer bar link from the lower suspension arm No.2.
Torque: 74 N·m (750 kgf·cm, 54 ft·lbf)

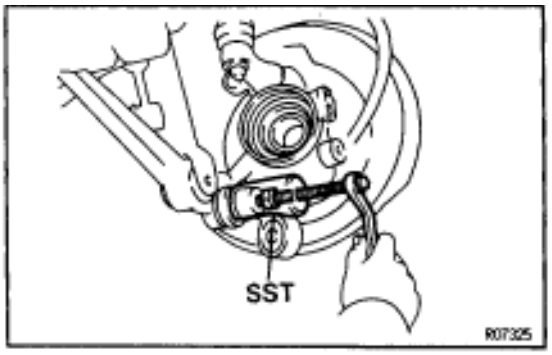

(c) Loosen the nut.
Torque: 150 N·m (1,525 kgf·cm, 110 ft·lbf)
(d) Using SST, disconnect the lower suspension arm No.2 from the rear axle carrier.
SST 09610–20012
NOTICE: Be careful not to damage the ball joint bolt.
(e) Remove the nut.

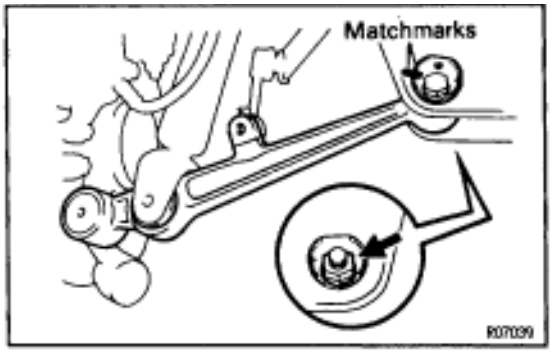

(f) Place matchmarks on the adjusting cam and subframe.
(g) Remove the nut, adjusting cam and lower suspension arm No.2.
Torque: 184 N·m (1,880 kgf·cm, 134 ft·lbf)
INSTALLATION HINT: After stabilizing the suspension, torque the nut.

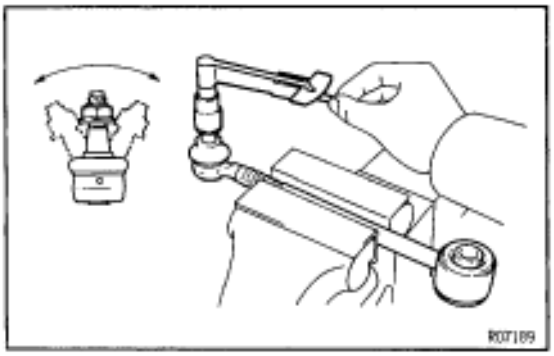

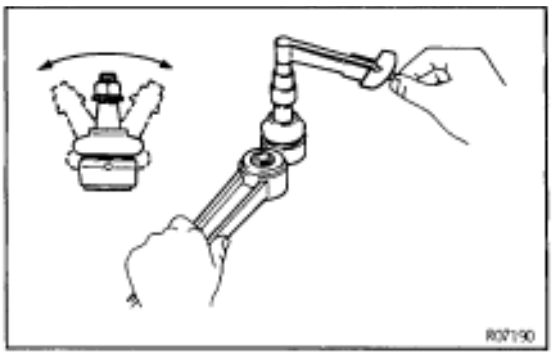

LOWER SUSPENSION ARM NO.1 AND NO.2 BALL JOINT INSPECTION

INSPECT BALL JOINT FOR ROTATION CONDITION

(a) Flip the ball joint stud back and forth 5 times, before installing the nut.

(b) Using a torque wrench, turn the nut continuously one turn every 2–4 seconds and take the torque reading on the 5th turn.

Torque (turning):

Lower suspension arm No.1

1.0–3.4 N·m (10–35 kgf·cm, 9–30 in.·lbf)

Lower suspension arm No.2

1.0–3.4 N·m (10–35 kgf·cm, 9–30 in.·lbf)

If not within specification, replace the lower suspension arm No.1 or/and No.2.

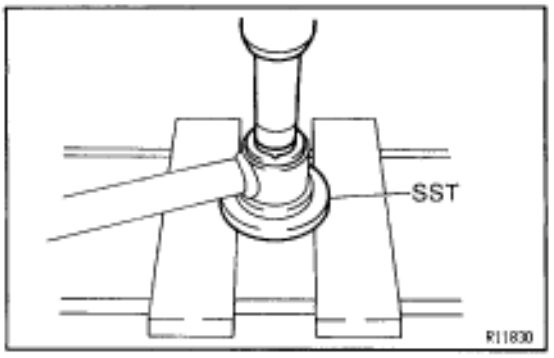

STRUT ROD BUSHING REPLACEMENT

1. REMOVE BUSHING

Using SST and a deep socket wrench, press out the bushing.
SST 09506–35010

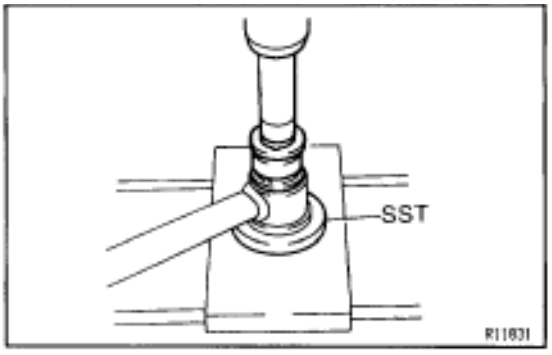

2. INSTALL NEW BUSHING

Using SST and a deep socket wrench, press in a new bushing.
SST 09506–35010
HINT: Do not apply grease or oil to the bushing.

STABILIZER BAR COMPONENTS

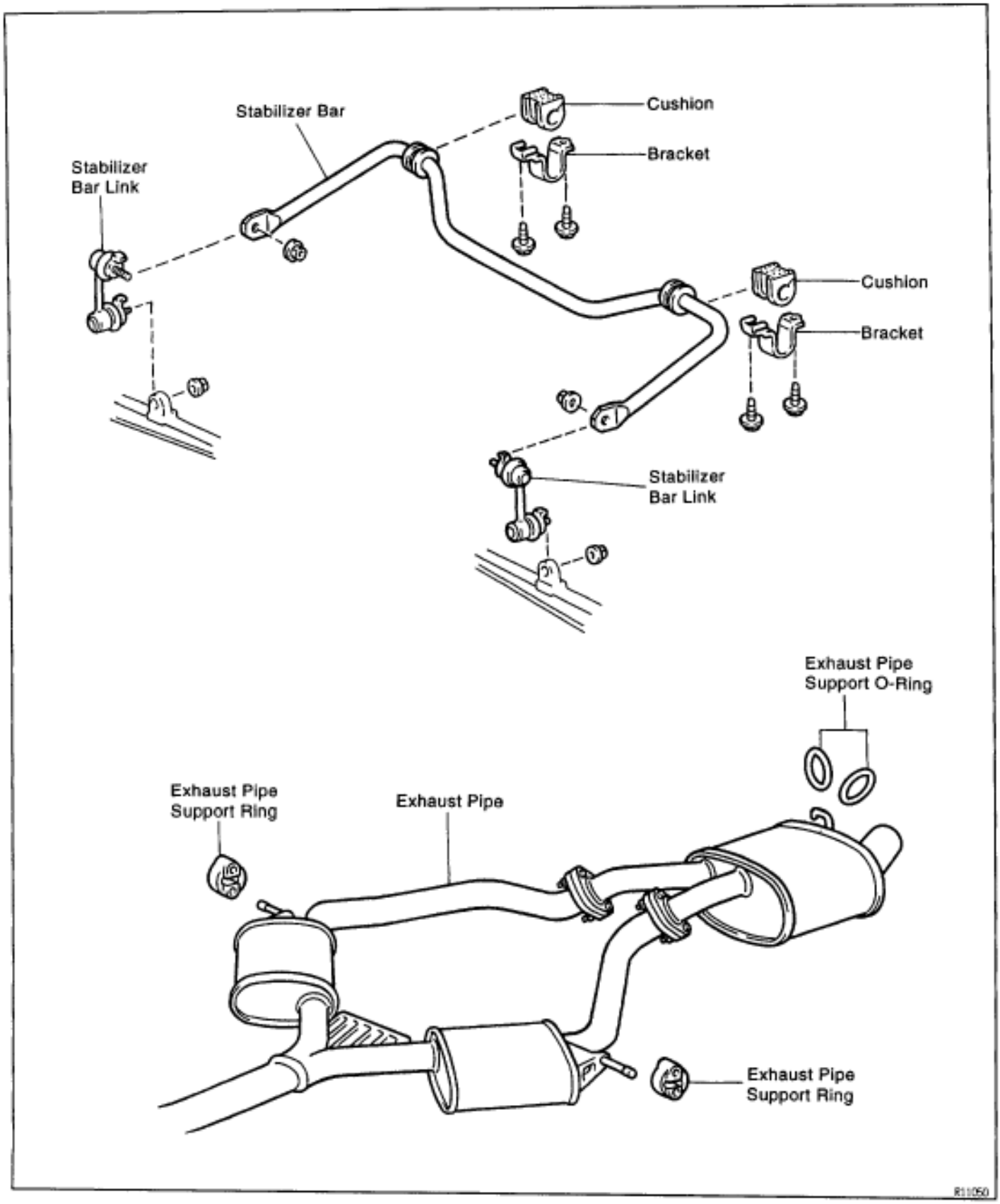

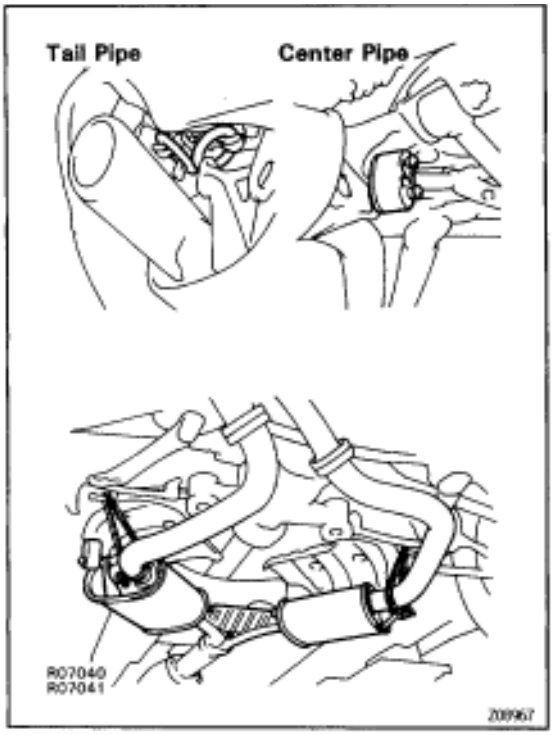

STABILIZER BAR REMOVAL

Installation is in the reverse order of removal.

1. DISCONNECT EXHAUST PIPE SUPPORTS

(a) Remove the 2 exhaust pipe support rings.
(b) Support the exhaust pipe securely.
(c) Remove the 2 exhaust pipe support O–rings.

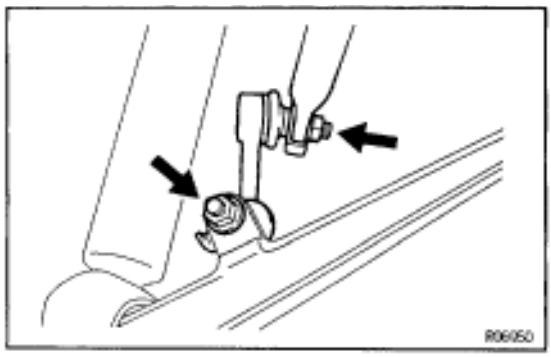

2. REMOVE BOTH STABILIZER BAR LINKS

Remove the 4 nuts and 2 stabilizer bar links.

Torque: 74 N·m (750 kgf·cm, 54 ft·lbf)

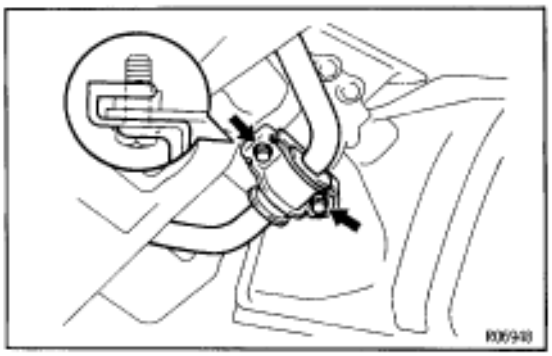

3. REMOVE BOTH STABILIZER BAR BRACKETS

Remove the 4 bolts and both stabilizer bar brackets from the subframe.

Torque: 31 N·m (320 kgf·cm, 23 ft·lbf)

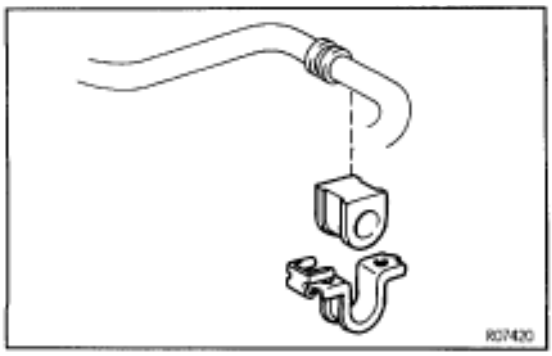

4. REMOVE BOTH CUSHIONS AND BRACKETS

Remove the cushions and brackets from the stabilizer bar.

INSTALLATION HINT: Install the cushion to the outside of the bush stopper.

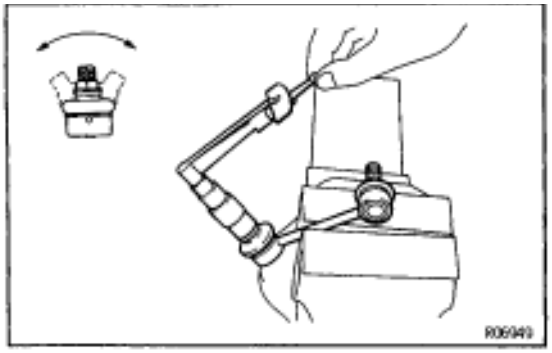

STABILIZER BAR LINK BALL JOINT INSPECTION

INSPECT BALL JOINT FOR ROTATION CONDITION

(a) Flip the ball joint stud back and forth 5 times, as shown in the illustration, before installing the nut.

(b) Using a torque wrench, turn the nut continuously one turn every 2–4 seconds and take the torque reading on the 5th turn.

Torque (turning):

0.05–1.0 N·m (0.5–10 kgf·cm, 2.6–8.7 in.·lbf)

If not within specification, replace the stabilizer bar link.

SERVICE SPECIFICATIONS

SERVICE DATA

Cold tire inflation pressure	2JZ-GE	Front	225/50ZR16	230 kPa (2.3 kgf/cm², 33 psi)
		Rear	245/50ZR16	250 kPa (2.5 kgf/cm², 36 psi)
	2JZ-GTE	Front	235/45ZR17	250 kPa (2.5 kgf/cm², 36 psi)
		Rear	255/40ZR17	250 kPa (2.5 kgf/cm², 36 psi)
Vehicle height	2JZ-GE	Front	225/50ZR16	185 mm (7.28 in.)
		Rear	245/50ZR16	250 mm (9.84 in.)
	2JZ-GTE	Front	235/45ZR17	187 mm (7.36 in.)
		Rear	255/40ZR17	251 mm (9.88 in.)
Front wheel alignment	Toe–in			0° ± 0.2° (0 ± 2 mm, 0.04 ± 0.08 in.)
		Tie rod end left–right error		1.5 mm (0.059 in.) or less
	Camber	2JZ-GE		−0°20′ ± 45′
		2JZ-GTE		−0°30′ ± 45′
		Left-right error		30′ or less
	Caster	2JZ-GE		3°20′ ± 45′
		2JZ-GTE		3°30′ ± 45′
		Left-right error		30′ or less
	Steering axis inclination	2JZ-GE		9°35′ ± 45′
		2JZ-GTE		9°45′ ± 45′
		Left-right error		30′ or less
	Wheel angle (Max.)	2JZ-GE	Inside wheel	35°00′ $^{+1°}_{-2°}$
			Outside wheel	30°45′ (reference)
		2JZ-GTE	Inside wheel	34°55′ $^{+1°}_{-2°}$
			Outside wheel	30°35′ (reference)
Front axle hub	Bearing axial direction play		Maximum	0.05 mm (0.0020 in.)
	Axle hub flange runout		Maximum	0.05 mm (0.0020 in.)
Front suspension	Upper ball joint turning torque			1.0 – 3.4 N·m (10 – 35 kgf·cm, 9 – 30 in.·lbf)
	Lower ball joint turning torque			1.0 – 3.4 N·m (10 – 35 kgf·cm, 9 – 30 in.·lbf)
	Stabilizer bar link ball joint turning torque			0.05 – 1.0 N·m (0.5 – 10 kgf·cm, 0.4 – 8.7 in.·lbf)
Rear wheel alignment	Toe–in			0.3° ± 0.2° (3 ± 2 mm, 0.12 ± 0.08 in.)
	Camber	2JZ-GE		−1°35′ ± 45′
		2JZ-GTE		−1°30′ ± 45′
		Left-right error		30′ or less
Rear axle hub	Bearing axial direction play		Maximum	0.05 mm (0.0020 in.)
	Axle hub flange runout		Maximum	0.05 mm (0.0020 in.)
Rear suspension	Lower ball joint turning torque			1.0 – 3.4 N·m (10 – 35 kgf·cm, 9 – 30 in.·lbf)
	Lower ball joint turning torque		No.1	1.0 – 3.4 N·m (10 – 35 kgf·cm, 9 – 30 in.·lbf)
			No.2	1.0 – 3.4 N·m (10 – 35 kgf·cm, 9 – 30 in.·lbf)
	Stabilizer bar link ball joint turning torque			0.05 – 1.0 N·m (0.5 – 10 kgf·cm, 0.4 – 8.7 in.·lbf)
Rear drive shaft	2JZ-GTE (M/T)		LH standard length	547.5 mm (21.555 in.)
			RH standard length	598.5 mm (23.602 in.)
	Others		LH standard length	553.5 mm (21.791 in.)
			RH standard length	598.5 mm (23.602 in.)

REAR DIFFERENTIAL (Except 2JZ–GTE M/T)

Rear differential	Drive pinion oil seal drive in depth		0 ± 0.5 mm
	Drive pinion shaft runout	Maximum	0.08 mm (0.0031 in.)
	Ring gear runout	Maximum	0.05 mm (0.0020 in.)
	Ring gear backlash		0.08 – 0.13 mm (0.0031 – 0.0051 in.)
	Drive pinion preload		0.5 – 0.8 N·m (5 – 8 kgf·cm, 4.3 – 6.9 in.·lbf)
	Total preload (add drive pinion preload)		0.5 – 0.8 N·m (5 – 8 kgf·cm, 4.3 – 6.9 in.·lbf)
	Pinion gear backlash(Conventional type)		0.05 – 0.20 mm (0.0020 – 0.0079 in.)

Pinion gear backlash adjusting thrust washer (Conventional type)

1.6 mm (0.063 in.)	1.7 mm (0.067 in.)	1.8 mm (0.071 in.)

Ring gear backlash adjusting washer

No.	Thickness mm (in.)	No.	Thickness mm (in.)	No.	Thickness mm (in.)
02	2.02 (0.0795)	32	2.32 (0.0913)	62	2.62 (0.1031)
04	2.04 (0.0803)	34	2.34 (0.0921)	64	2.64 (0.1039)
06	2.06 (0.0811)	36	2.36 (0.0929)	66	2.66 (0.1047)
08	2.08 (0.0819)	38	2.38 (0.0937)	68	2.68 (0.1055)
10	2.10 (0.0827)	40	2.40 (0.0945)	70	2.70 (0.1063)
12	2.12 (0.0835)	42	2.42 (0.0953)	72	2.72 (0.1071)
14	2.14 (0.0843)	44	2.44 (0.0961)	74	2.74 (0.1079)
16	2.16 (0.0850)	46	2.46 (0.0969)	76	2.76 (0.1087)
18	2.18 (0.0858)	48	2.48 (0.0976)	78	2.78 (0.1094)
20	2.20 (0.0866)	50	2.50 (0.0984)	80	2.80 (0.1102)
22	2.22 (0.0974)	52	2.52 (0.0992)	82	2.82 (0.1110)
24	2.24 (0.0882)	54	2.54 (0.1000)	84	2.84 (0.1118)
26	2.26 (0.0890)	56	2.56 (0.1008)	86	2.86 (0.1126)
28	2.28 (0.0898)	58	2.58 (0.1016)		
30	2.30 (0.0906)	60	2.60 (0.1024)		

Tooth contact pattern adjusting washer

No.	Thickness mm (in.)	No.	Thickness mm (in.)	No.	Thickness mm (in.)
87	1.87 (0.0736)	02	2.02 (0.0795)	17	2.17 (0.0854)
88	1.88 (0.0740)	03	2.03 (0.0799)	18	2.18 (0.0858)
89	1.89 (0.0744)	04	2.04 (0.0803)	19	2.19 (0.0862)
90	1.90 (0.0748)	05	2.05 (0.0807)	20	2.20 (0.0866)
91	1.91 (0.0752)	06	2.06 (0.0811)	21	2.21 (0.0870)
92	1.92 (0.0756)	07	2.07 (0.0815)	22	2.22 (0.0874)
93	1.93 (0.0760)	08	2.08 (0.0819)	23	2.23 (0.0878)
94	1.94 (0.0764)	09	2.09 (0.0823)	24	2.24 (0.0882)
95	1.95 (0.0768)	10	2.10 (0.0827)	25	2.25 (0.0886)
96	1.96 (0.0772)	11	2.11 (0.0831)	26	2.26 (0.0890)
97	1.97 (0.0776)	12	2.12 (0.0835)	27	2.27 (0.0894)
98	1.98 (0.0780)	13	2.13 (0.0839)	28	2.28 (0.0898)
99	1.99 (0.0783)	14	2.14 (0.0843)		
00	2.00 (0.0787)	15	2.15 (0.0846)		
01	2.01 (0.0791)	16	2.16 (0.0850)		

REAR DIFFERENTIAL (2JZ–GTE M/T)

Rear differential	Drive pinion oil seal drive in depth		2 ± 0.5 mm
	Drive pinion shaft runout	Maximum	0.08 mm (0.0031 in.)
	Ring gear runout	Maximum	0.08 mm (0.0031 in.)
	Ring gear backlash		0.08 – 0.13 mm (0.0031 – 0.0051 in.)
	Drive pinion preload		1.0 – 1.2 N·m (10 – 12 kgf·cm, 8.9 – 10.6 in.·lbf)
	Total preload (add drive pinion preload)		0.4 – 0.6 N·m (4 – 6 kgf·cm, 3.5 – 5.2 in.·lbf)

Ring gear backlash adjusting washer

No.	Thickness mm (in.)	No.	Thickness mm (in.)	No.	Thickness mm (in.)
18	1.18 (0.0465)	48	1.48 (0.0583)	78	1.78 (0.0701)
20	1.20 (0.0472)	50	1.50 (0.0591)	80	1.80 (0.0709)
22	1.22 (0.0480)	52	1.52 (0.0598)	82	1.82 (0.0717)
24	1.24 (0.0488)	54	1.54 (0.0606)	84	1.84 (0.0724)
26	1.26 (0.0496)	56	1.56 (0.0614)	86	1.86 (0.0732)
28	1.28 (0.0504)	58	1.58 (0.0622)	88	1.88 (0.0740)
30	1.30 (0.0512)	60	1.60 (0.0630)	90	1.90 (0.0748)
32	1.32 (0.0520)	62	1.62 (0.0638)	92	1.92 (0.0756)
34	1.34 (0.0528)	64	1.64 (0.0646)	08	1.08 (0.0425)
36	1.36 (0.0535)	66	1.66 (0.0654)	10	1.10 (0.0433)
38	1.38 (0.0543)	68	1.68 (0.0661)	12	1.12 (0.0441)
40	1.40 (0.0551)	70	1.70 (0.0669)	14	1.14 (0.0449)
42	1.42 (0.0559)	72	1.72 (0.0677)	16	1.16 (0.0457)
44	1.44 (0.0567)	74	1.74 (0.0685)		
46	1.46 (0.0575)	76	1.76 (0.0693)		

Tooth contact pattern adjusting washer

No.	Thickness mm (in.)	No.	Thickness mm (in.)	No.	Thickness mm (in.)
80	1.80 (0.0709)	95	1.95 (0.0768)	10	2.10 (0.0827)
81	1.81 (0.0713)	96	1.96 (0.0772)	11	2.11 (0.0831)
82	1.82 (0.0717)	97	1.97 (0.0776)	12	2.12 (0.0835)
83	1.83 (0.0720)	98	1.98 (0.0780)	13	2.13 (0.0839)
84	1.84 (0.0724)	99	1.99 (0.0783)	14	2.14 (0.0843)
85	1.85 (0.0728)	00	2.00 (0.0787)	15	2.15 (0.0846)
86	1.86 (0.0732)	01	2.01 (0.0791)	16	2.16 (0.0850)
87	1.87 (0.0736)	02	2.02 (0.0795)	17	2.17 (0.0854)
88	1.88 (0.0740)	03	2.03 (0.0799)	18	2.18 (0.0858)
89	1.89 (0.0744)	04	2.04 (0.0803)	77	1.77 (0.0697)
90	1.90 (0.0748)	05	2.05 (0.0807)	78	1.78 (0.0701)
91	1.91 (0.0752)	06	2.06 (0.0811)	79	1.79 (0.0705)
92	1.92 (0.0756)	07	2.07 (0.0815)		
93	1.93 (0.0760)	08	2.08 (0.0819)		
94	1.94 (0.0764)	09	2.09 (0.0823)		

TORQUE SPECIFICATIONS

(FRONT)

Part tightened		N·m	kgf·cm	ft·lbf
Hub nut		103	1,050	76
Lower suspension arm x Suspension crossmember		226	2,300	166
Lower suspension arm bracket stay	Bolt	43	440	32
	Nut	59	600	43
Axle hub lock nut		199	2,030	147
Upper suspension arm x Subframe		164	1,670	121
Lower suspension arm x Shock absorber bracket		52	530	38
Tie rod end x Steering knuckle		49	500	36
Steering knuckle x Upper suspension arm		103	1,050	76
Steering knuckle x Lower suspension arm		125	1,270	92
Disc brake caliper x Steering knuckle		118	1,200	87
ABS speed sensor x Steering knuckle		8	80	69in.·lbf
Front shock absorber x Body		35	360	26
Front shock absorber x Lower suspension arm		143	1,460	106
Front shock absorber x Suspension support		29	300	22
Stabilizer bar link x Lower suspension arm		74	750	54
Stabilizer bar link x Stabilizer bar		74	750	54
Stabilizer bar bracket x Body		18	180	13
Steering knuckle x Dust cover		8	85	74in.·lbf

(REAR)

Part tightened		N·m	kgf·cm	ft·lbf
Hub nut		103	1,050	76
Rear shock absorber x Lower suspension arm No.2		137	1,400	101
Upper suspension arm x Suspension crossmember		164	1,670	271
Rear axle carrier x Disc brake caliper		104	1,065	77
Lower suspension arm No.1 x Rear axle carrier		59	600	43
Lower suspension arm No.1 x Subframe		184	1,880	136
Lower suspension arm No.2 x Rear axle carrier		150	1,525	110
Lower suspension arm No.2 x suspension crossmember		184	1,880	136
Lower suspension arm bracket x Subframe		18	180	13
ABS speed sensor x Rear axle carrier		8	80	69in.·lbf
Strut rod x Rear axle carrier		184	1,880	136
Strut rod x Body		184	1,880	136
Rear drive shaft x Axle hub		289	2,950	213
Upper suspension arm x Rear axle carrier		109	1,110	80
Backing plate x Rear axle carrier		26	260	19
Rear axle carrier x Backing plate	(Hexagon bolt)	180	1,825	132
Rear drive shaft x Differential		83	850	61
Differential x Propeller shaft		79	805	58
Differential mounting bolt	Front Rear	123 142	1,250 1,450	90 105
Ring gear x Differential case		See page SA–71		
Differential carrier retainer set bolt	2JZ–GTE M/T Except 2JZ–GTE M/T	47 22	480 225	35 16
Differential carrier cover set bolt	2JZ–GTE M/T Except 2JZ–GTE M/T	78 47	800 475	58 34
Drain (Filler) plug		49	500	36
Breather plug		21	210	15
Shock absorber x Body		26	260	19
Suspension support x Shock absorber		27	280	20
Stabilizer bar link x Lower suspension arm No.2		74	750	54
Stabilizer bar link x Stabilizer bar		74	750	54
Stabilizer bar bracket x Body		31	320	23

A340E (2JZ–GE)
AUTOMATIC TRANSMISSION

OPERATION
FUNCTION OF COMPONENTS

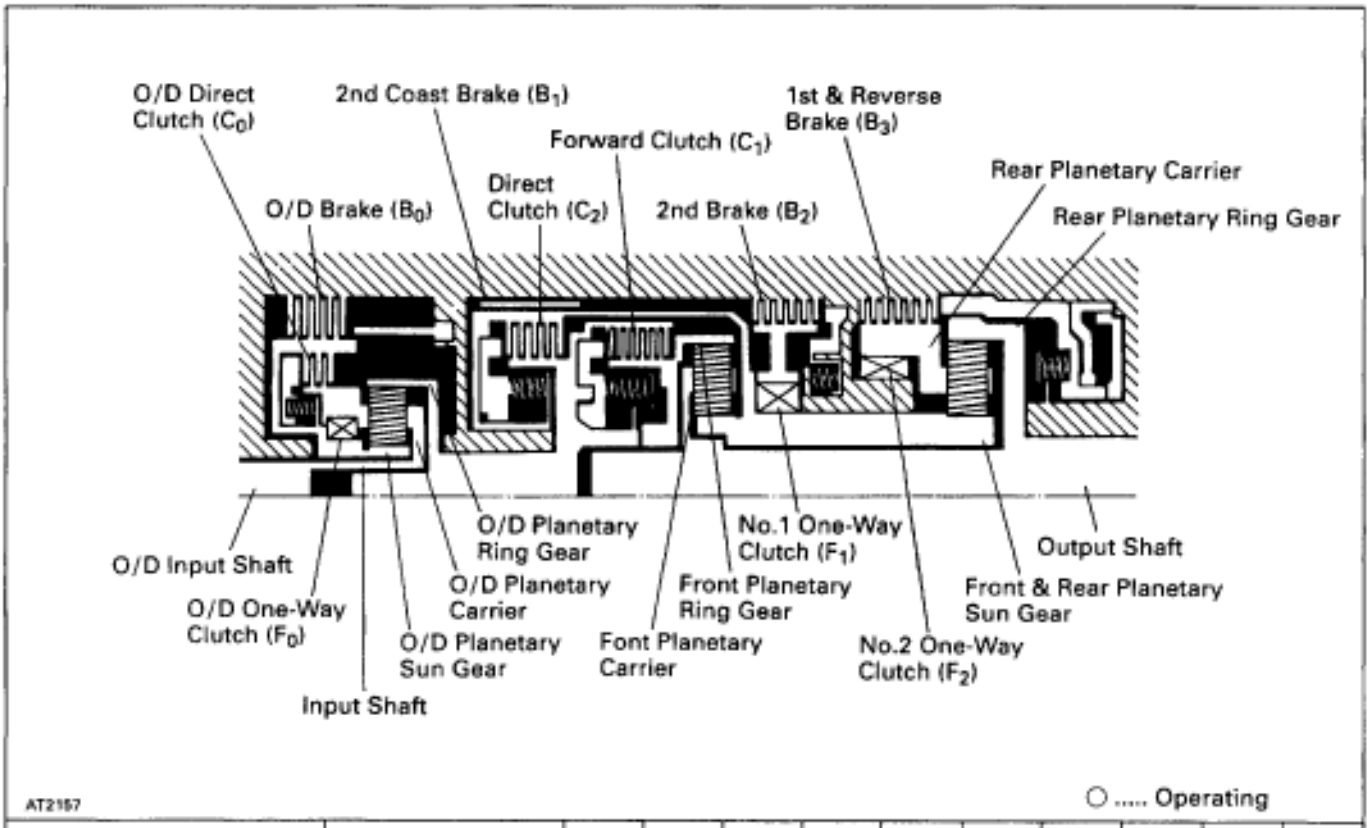

○ ..... Operating

Shift lever position	Gear position	C_0	C_1	C_2	B_0	B_1	B_2	B_3	F_0	F_1	F_2
P	Parking	○									
R	Reverse	○		○				○	○		
N	Neutral	○									
D	1st	○	○						○		○
	2nd	○	○				○		○	○	
	3rd	○	○	○			○		○		
	O/D		○	○	○		○				
2	1st	○	○						○		○
	2nd	○	○			○	○		○	○	
	*3rd	○	○	○			○		○		
L	1st	○	○					○	○		○
	*2nd	○	○			○	○		○	○	

* Down–shift only–no up–shift

COMPONENT	FUNCTION
O/D Direct Clutch (C_0)	Connects overdrive sun gear and overdrive carrier
O/D Brake (B_0)	Prevents overdrive sun gear from turning either clockwise or counterclockwise
O/D One–Way Clutch (F_0)	When transmission is being driven by engine, connects overdrive sun gear and overdrive carrier
Forward Clutch (C_1)	Connects input shaft and front planetary ring gear
Direct Clutch (C_2)	Connects input shaft and front & rear planetary sun gear
2nd Coast Brake (B_1)	Prevents front & rear planetary sun gear from turning either clockwise or counterclockwise
2nd Brake (B_2)	Prevents outer race of F_1 from turning either clockwise or counterclockwise, thus preventing front & rear planetary sun gear from turning counterclockwise
1st & Reverse Brake (B_3)	Prevents rear planetary carrier from turning either clockwise or counterclockwise
No. 1 One–Way Clutch (F_1)	When B_2 is operating, prevents front & rear planetary sun gear from turning counterclockwise
No. 2 One–Way Clutch (F_2)	Prevents rear planetary carrier from turning coiunterclockwise

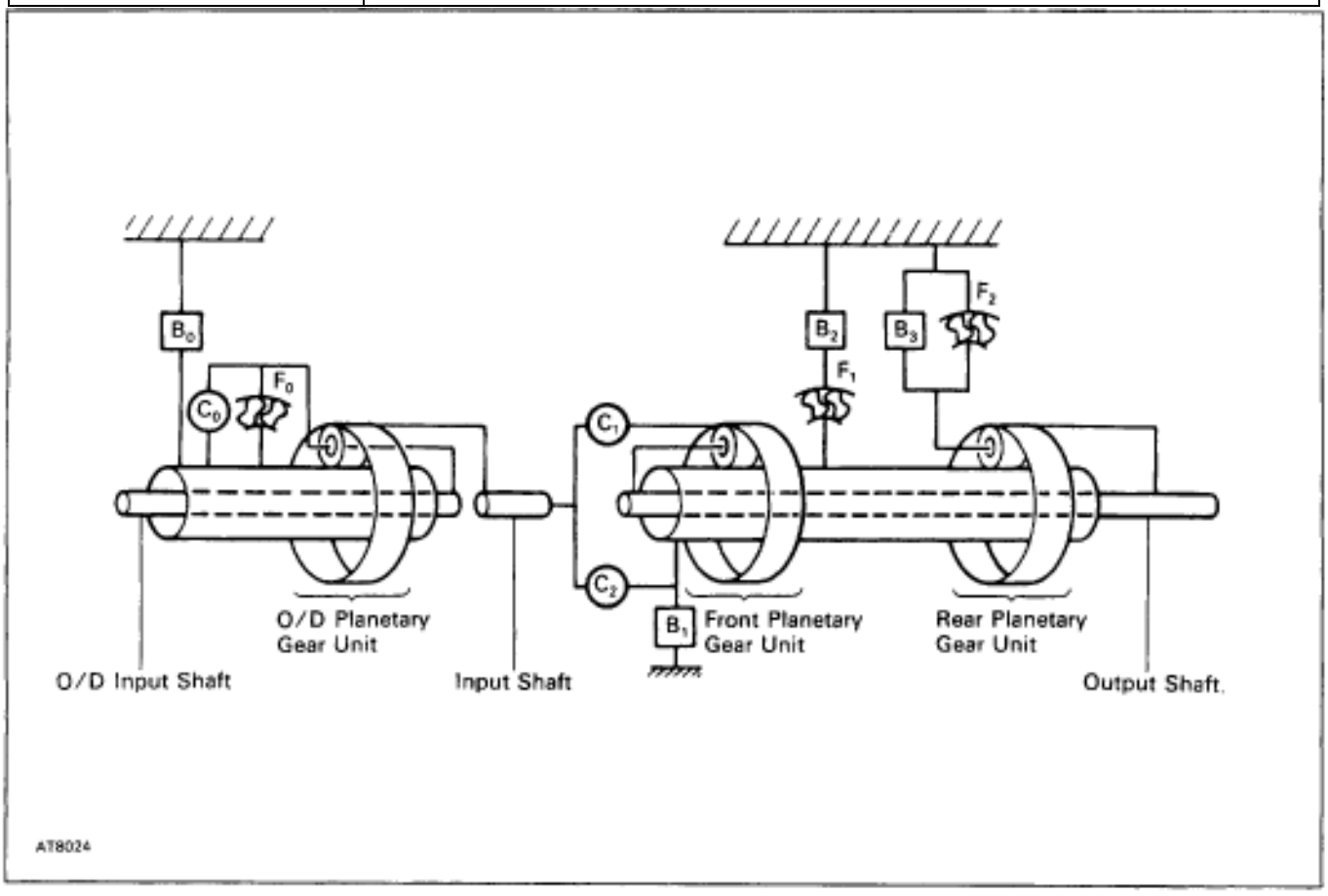

D or 2 Position 1st Gear

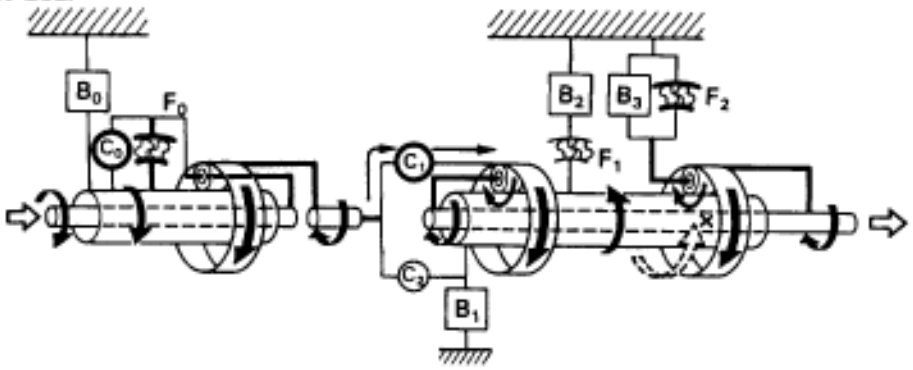

AT6675

D Position 2nd Gear

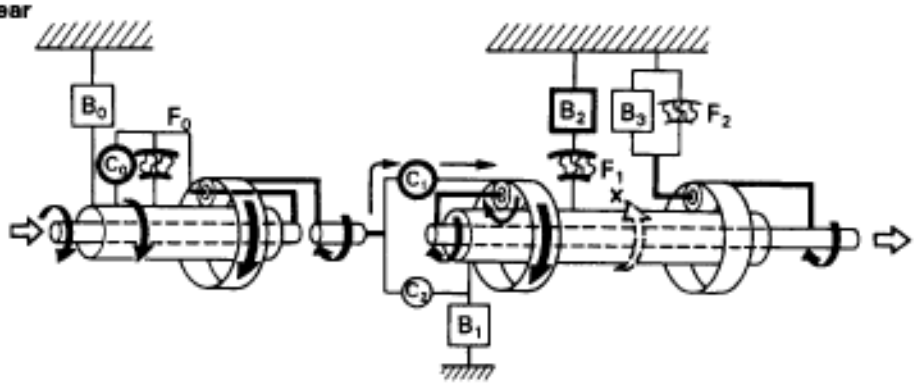

AT6676

D or 2 Position 3rd Gear

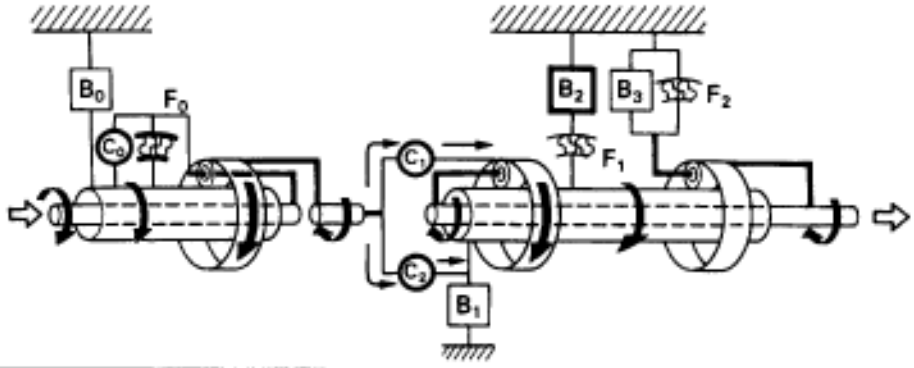

AT6677

D Position O/D

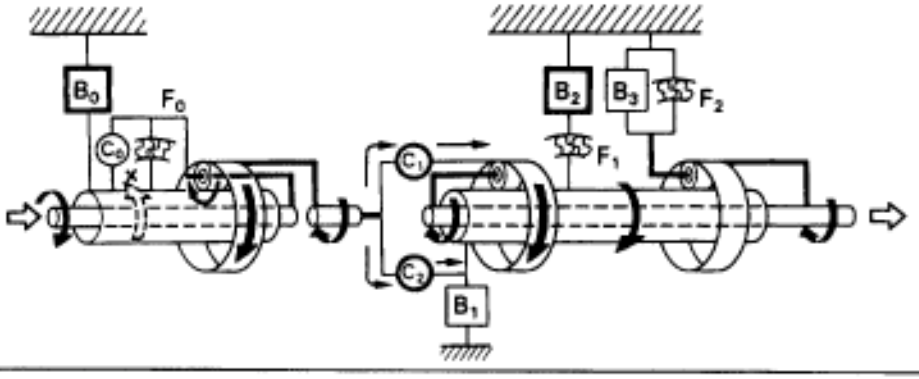

AT6678

2 or L Position 2nd Gear

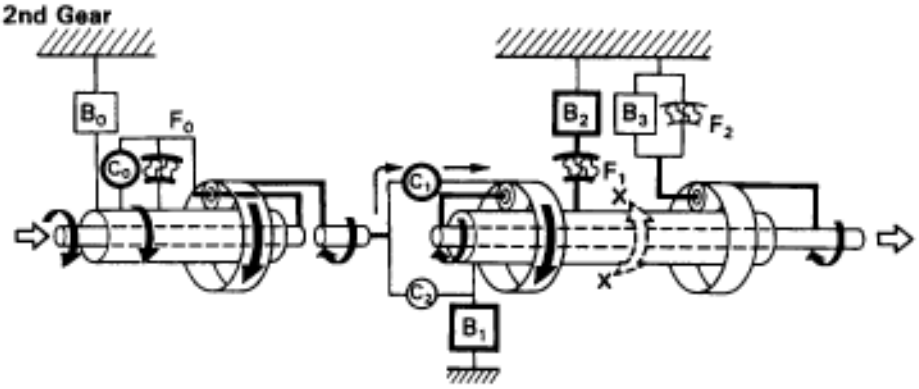

AT6679

L Position 1st Gear

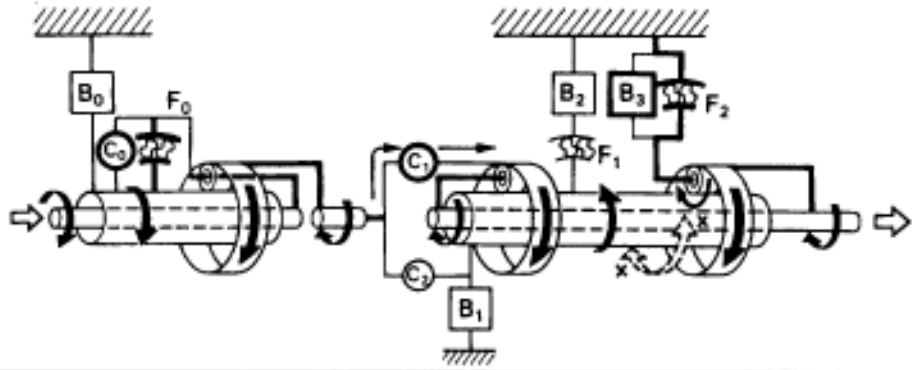

AT6680

R Position Reverse Gear

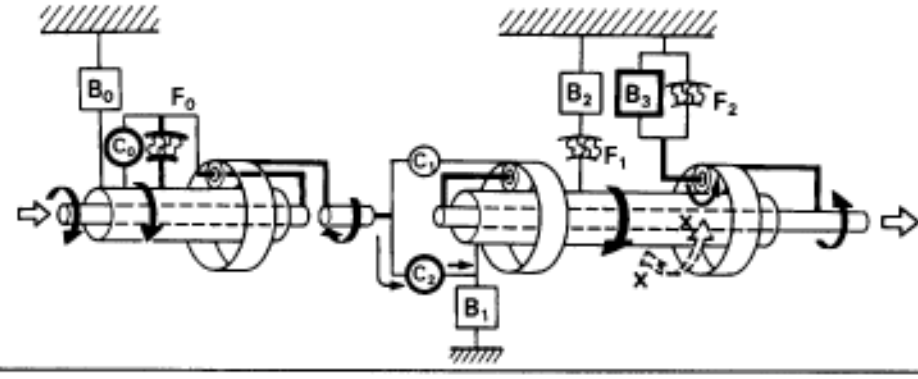

AT6681

HYDRAULIC CONTROL SYSTEM

The hydraulic control system is composed of the oil pump, the valve body, the solenoid valves and the clutches and brakes, as well as the fluid passages which connect all of these components. Based on the hydraulic pressure created by the oil pump, the hydraulic control system governs the hydraulic pressure acting on the torque converter clutch, clutches and brakes in accordance with the vehicle driving conditions.

There are three solenoid valves on the valve body. These solenoid valves are turned on and off by signals from the ECM to operate the shift valves. These shift valves then switch the fluid passages so that fluid goes to the torque converter clutch and planetary gear units.

Except for the solenoid valves, the hydraulic control system of the electronically controlled transmission is basically the same as that of the fully hydraulic controlled automatic transmission.

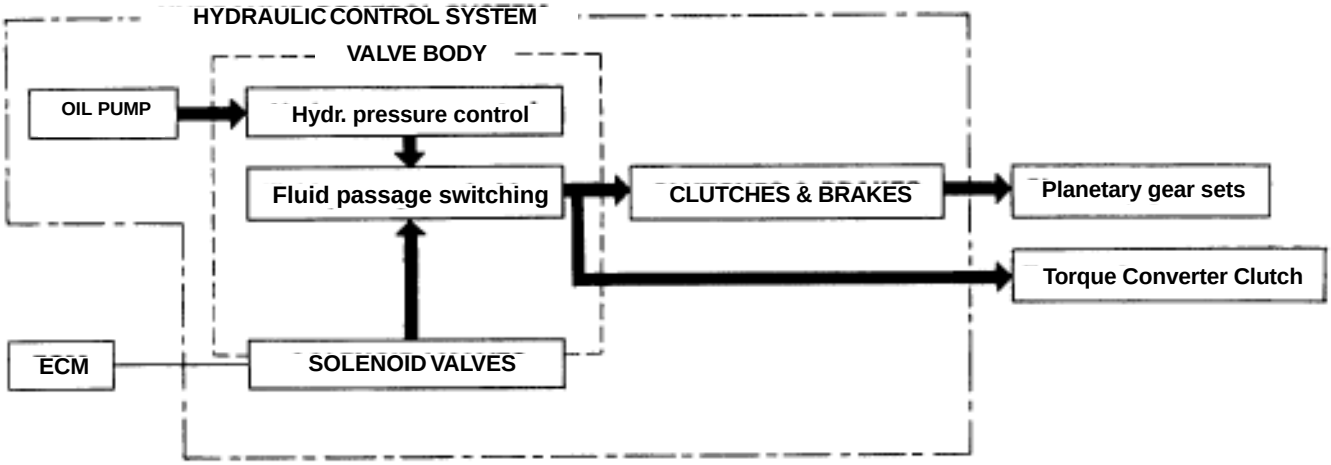

- **LINE PRESSURE**

Line pressure is the most basic and important pressure used in the automatic transmission, because it is used to operate all of the clutches and brakes in the transmission.

If the primary regulator valve does not operate correctly, line pressure will be either too high or too low. Line pressure that is too high will lead to shifting shock and consequent engine power loss due to the greater output required from the oil pump; line pressure that is too low will cause slippage of clutches and brakes, which will, in extreme cases, prevent the vehicle from moving. Therefore, if either of these problems are noted, the line pressure should be measured to see if it is within standard.

- **THROTTLE PRESSURE**

Throttle pressure is always kept in accordance with the opening angle of the engine throttle valve. This throttle pressure acts on the primary regulator valve and, accordingly, line pressure is regulated in response to the throttle valve opening.

In the fully hydraulic controlled automatic transmission, throttle pressure is used for regulating line pressure and as signal pressure for up–shift and down–shift of the transmission. In the electronically controlled transmission, however, throttle pressure is used only for regulating line pressure. Consequently, improper adjustment of the transmission throttle cable may result in a line pressure that is too high or too low. This, in turn, will lead to shifting shock or clutch and brake slippage.

ELECTRONIC CONTROL SYSTEM

The electronic control system, which controls the shift points and the operation of the lock–up clutch, is composed of the following three parts:

1. Sensors

These sensors sense the vehicle speed, throttle opening and other conditions and send this data to the ECM in the form of electrical signals.

2. ECM

The ECM determines the shift and lock–up timing based upon the signals from sensors, and controls the solenoid valves of the hydraulic control unit accordingly.

3. Actuators

These are three solenoid valves that control hydraulic pressure acting on the hydraulic valves to control shifting and lock–up timing.

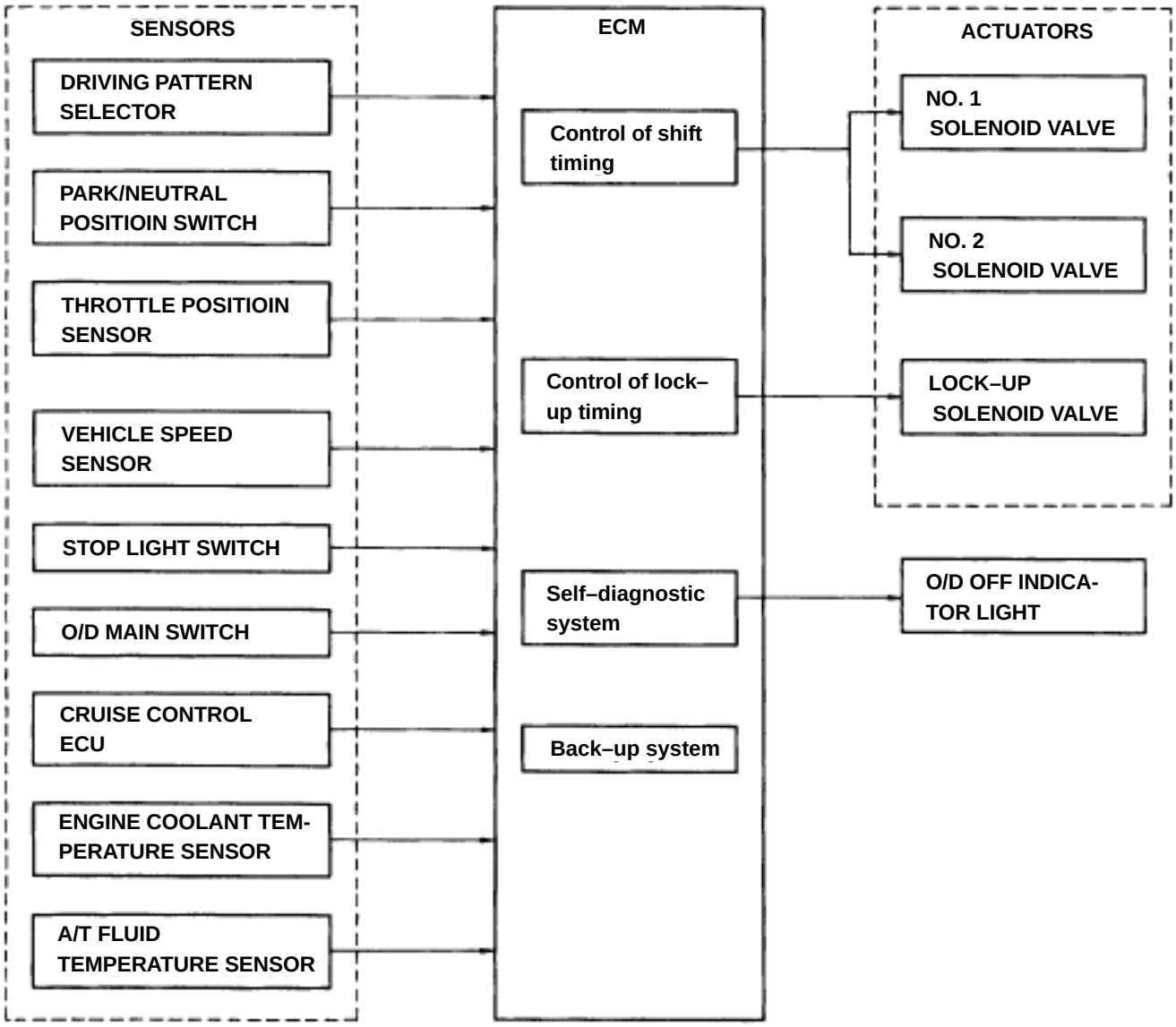

FUNCTION OF ECU

- **Control of Shifting Timing**

The ECM has programmed into its memory the optimum shift pattern for each shift lever position (D, 2, L position) and driving mode (Normal or Manual).
Based on the appropriate shift pattern, the ECM turns No.1 and No.2 solenoid valves on or off in accordance with the vehicle speed signal from the vehicle speed sensor and the throttle opening signal from the throttle position sensor. In this manner, the ECM operates each shift valve, opening or closing the fluid passages to the clutches and brakes to permit up–shift or down–shift of the transmission.
HINT: The electronic control system provides shift timing and lock–up control only while the vehicle is traveling forward. In REVERSE, PARK, and NEUTRAL, the transmission is mechanically, not electronically controlled.

- **Control of Overdrive**

Driving in overdrive is possible if the O/D main switch is on and the shift lever is in the D position. However, when the vehicle is being driven using the cruise control system (CCS), if the actual vehicle speed drops to about 4 km/h (2 mph) below the set speed while the vehicle is running in overdrive, the CCS ECU sends a signal to the ECM to release the overdrive and prevent the transmission from shifting back into overdrive until the actual vehicle speed reaches the speed set in the CCS memory.
On this model, if the engine coolant temperature falls below 60˚C (140˚F), the ECM sends a signal to the ECM, preventing the transmission from up–shifting into overdrive.

- **Control of Lock–Up System**

The ECM has programmed in its memory a lock–up clutch operation pattern for each driving mode (Normal of Manual). Based on this lock–up pattern, the ECM turns lock–up solenoid valve on or off in accordance with the vehicle speed signals received from the vehicle speed sensor and the throttle opening signals from the throttle position sensor.
Depending on whether lock–up solenoid valve is on or off, the lock–up relay valve performs changeover of the fluid passages for the converter pressure acting on the torque converter clutch to engage or disengage the lock–up clutch.
Mandatory Cancellation of Lock–Up System:
If any of the following conditions exist, the ECM turns off lock–up solenoid valve to disengage the lock–up clutch.

1) The brake light switch comes on (during braking).
2) The IDL points of the throttle position sensor close (throttle valve fully closed).
3) The vehicle speed drops 4 km/h (2 mph) or more below the set speed while the cruise control system is operating.
4) The engine coolant temperature falls below 60˚C (140˚F) and vehicle speed is under 60 km/h (37 mph), or 35˚C (95˚F) and vehicle speed is under 40 km/h (25 mph).

The purpose of 1) and 2) above is to prevent the engine from stalling if the rear wheels lock up.
The purpose of 3) is to cause the torque converter clutch to operate to obtain torque multiplication. The purpose of 4) is both to improve general driveability, and to speed up transmission warm–up.
Also, while the lock–up system is in operation, the ECM will temporarily turn it off during up–shift or down–shift in order to decrease shifting shock.

SYSTEM DIAGRAM

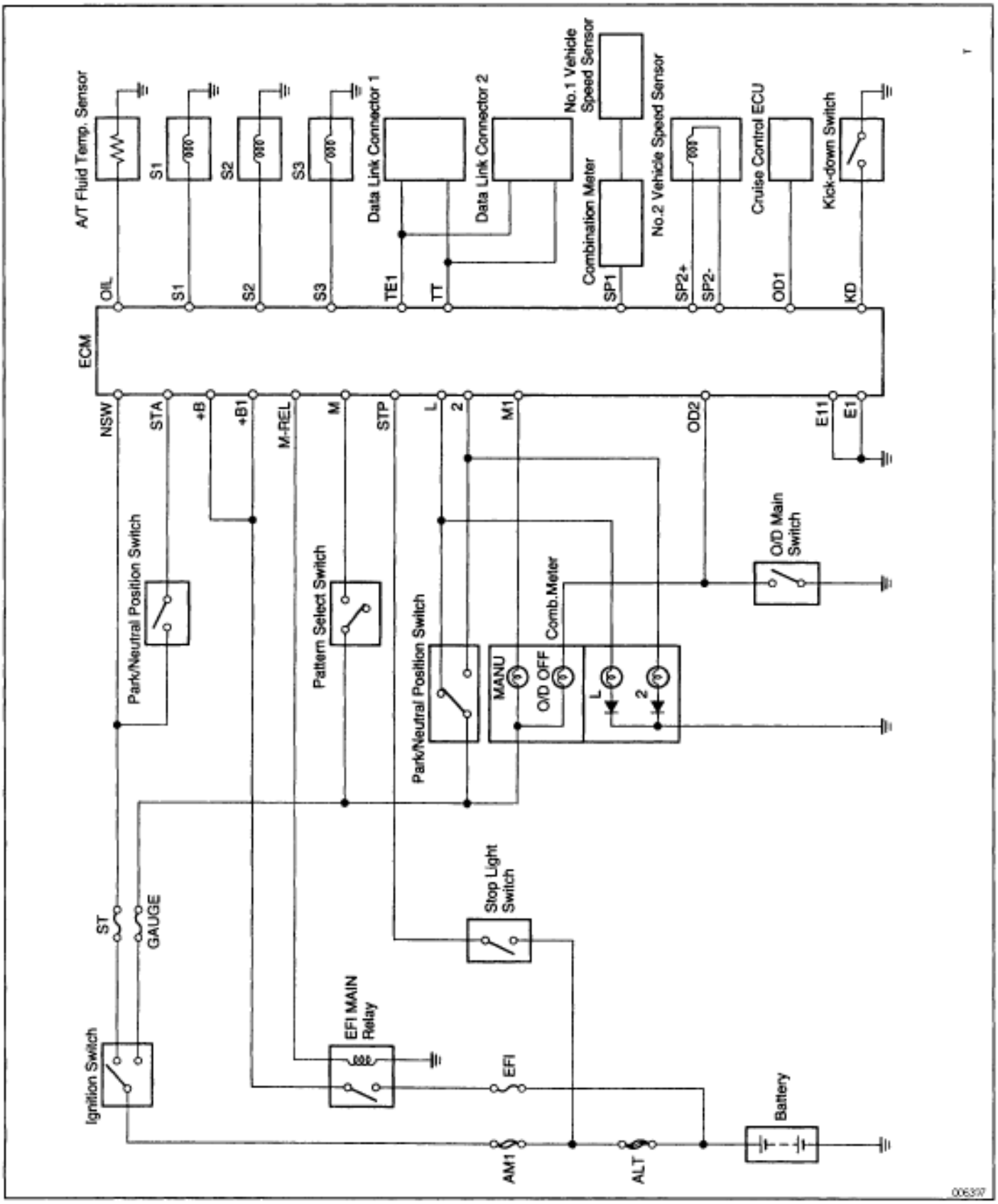

ARRANGEMENT OF COMPONENTS

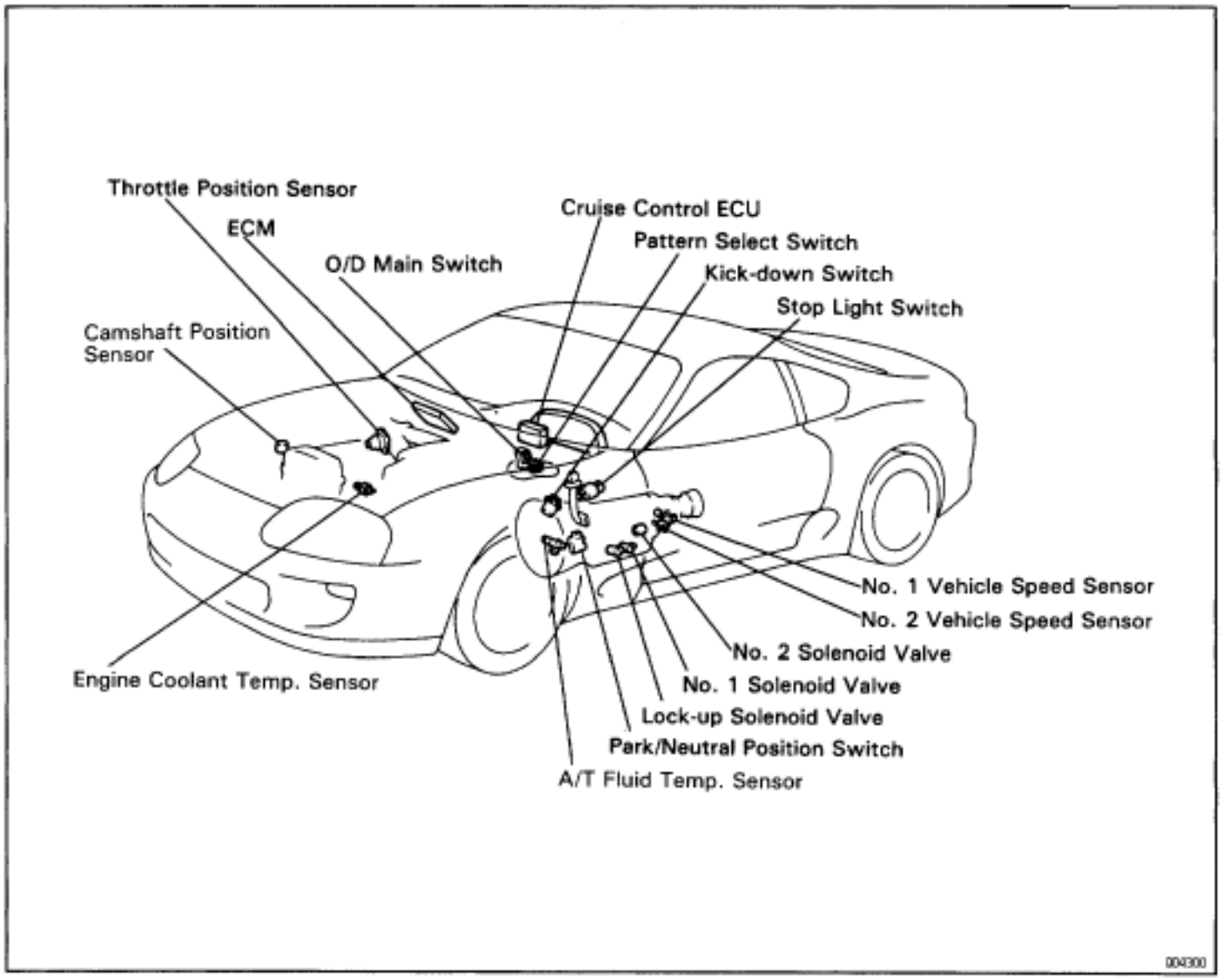

No.	Components	Function
1	Pattern Select Switch	Selects the Manual mode or the Normal mode for shift and lock–up timing.
2	Crankshaft Position Sensor	Detects the engine speed.
3	Park/Neutral Position Switch	Detects the shift lever position.
4	Stop Light Switch	Detects if the brake pedal is depressed.
5	Throttle Position Sensor	Detects the throttle valve opening angle.
6	O/D Main Switch	Prevents up–shift to the O/D gear if the O/D main switch is off.
7	Cruise Control ECU	This ECU prevents the transmission from shifting into O/D and prohibits lock–up control when the vehicle's speed drops below the cruise control set speed parameter.

8	No.1 and No.2 Vehicle Speed Sensor	Detects the vehicle speed. Ordinarily, transmission control uses signals from the No.2 vehicle speed sensor, and the No.1 vehicle speed sensor is used as a back–up.
9	Engine Coolant Temp. Sensor	Detects the engine coolant temp.
10	ECM	Controls the engine and transmission actuators based on signals from each sensor.
11	No.1 and No.2 Solenoid Valves	Control the hydraulic pressure applied to each shift valve, and control the gear position and timing.
12	Lock–up Solenoid Valve (For lock–up control pressure modulation)	Controls the hydraulic pressure applied to the lock–up clutch and controls lock–up timing.
13	O/D OFF Indicator Light	Blinks and warns the driver, while the O/D main switch is pushed in, when the electronic control circuit is malfunctioning.
14	Kick–down Switch	Detects if the accelerator pedal is depressed beyond the full throttle valve opening position.
15	A/T Fluid Temp. Sensor	Detects the A/T fluid temp.

PRECAUTION

PRECAUTIONS

When working with FIPG material, you must observe the following.

- **Using a razor blade and gasket scraper, remove all the old packing (FIPG) material from the gasket surfaces.**
- **Thoroughly clean all components to remove all the loose material.**
- **Clean both sealing surfaces with a non–residue solvent.**
- **Apply the seal packing in an approx. 1 mm (0.04 in.) bead along the sealing surface.**
- **Parts must be assembled within 10 minutes of application. Otherwise, the packing (FIPG) material must be removed and reapplied.**

If the vehicle is equipped with a mobile communication system, refer to the precaution in the IN section.

PREPARATION

SST (SPECIAL SERVICE TOOLS)

	09032–00100	Oil Pan Seal Cutter	
	09308–10010	Oil Seal Puller	
	09325–40010	Transmission Oil Plug	
	09350–30020	TOYTOA Automatic Transmission Tool Set	
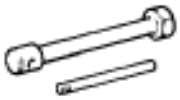	(09351–32010)	One–way Clutch Test Tool	
	(09351–32020)	Stator Stopper	
	09843–18020	Diagnosis Check Wire	
	09990–01000	Engine Control Computer Check Harness “A”	
	09992–00094	Automatic Transmission Oil Pressure Gauge Set	

RECOMMENDED TOOLS

	09082–00050 TOYTOA Electrical Tester Set	

EQUIPMENT

Vernier calipers	Check torque converter clutch installation.
Dial indicator with magnetic base	Check drive plate runout.
Straight edge	Check torque converter clutch installation.
Torque wrench	

LUBRICANT

Item	Capacity	Classification
Automatic transmission fluid Dry fill Drain and refill	 7.2 liter (7.6 US qts, 6.3 lmp.qts) 1.6 liter (1.7 US qts, 1.4 lmp.qts)	ATF DEXRON® II

SSM (SPECIAL SERVICE MATERIALS)

088260–0090	Seal Packing 1281. THREE BOND 1281 or equivalent (FIPG)	Transmission X Oil pan

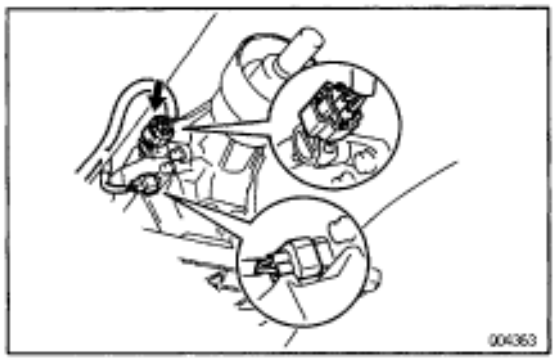

ON–VEHICLE REPAIR

NO.1 VEHICLE SPEED SENSOR ASSEMBLY REPLACEMENT

1. DISCONNECT NO.1 VEHICLE SPEED SENSOR CONNECTOR

2. REMOVE NO.1 VEHICLE SPEED SENSOR ASSEMBLY

(a) Remove the bolt and No.1 vehicle speed sensor assembly.

(b) Remove the speedometer driven gear from the No.1 vehicle speed sensor.

(c) Remove the O–ring from the No.1 vehicle speed sensor.

3. INSTALL NO.1 VEHICLE SPEED SENSOR ASSEMBLY

(a) Coat a new O–ring with A/T fluid and install it to the No.1 vehicle speed sensor.

(b) Install the speedometer driven gear to the No.1 vehicle speed sensor.

(c) Install the No.1 vehicle speed sensor to the extension housing and torque the bolt.

Torque: 16 N·m (160 kgf·cm, 12 ft·lbf)

4. CONNECT NO.1 VEHICLE SPEED SENSOR CONNECTOR

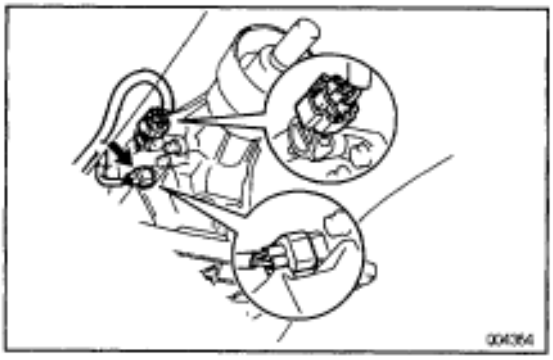

NO.2 VEHICLE SPEED SENSOR REPLACEMENT

1. DISCONNECT NO.2 VEHICLE SPEED SENSOR CONNECTOR

2. REMOVE NO.2 VEHICLE SPEED SENSOR

(a) Remove the bolt and No.2 vehicle speed sensor.

(b) Remove the O–ring.

3. INSTALL NO.2 VEHICLE SPEED SENSOR

(a) Coat a new O–ring with A/T fluid and install it to the No.2 vehicle speed sensor.

(b) Install the No.2 vehicle speed sensor to the extension housing and torque the bolt.

Torque: 5.4 N·m (55 kgf·cm, 48 in.·lbf)

4. CONNECT NO.2 VEHICLE SPEED SENSOR CONNECTOR

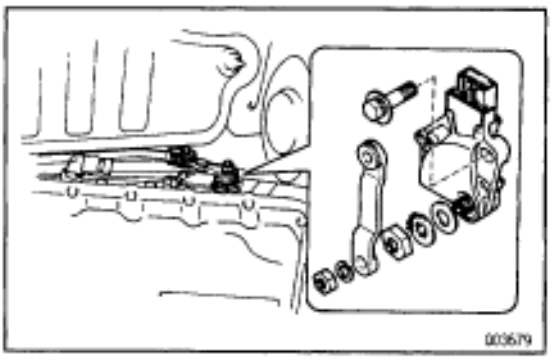

PARK/NEUTRAL POSITION SWITCH REPLACEMENT

1. REMOVE FRONT EXHAUST PIPE
(See page EG–83)
2. DISCONNECT PARK/NEUTRAL POSITION SWITCH CONNECTOR
3. REMOVE PARK/NEUTRAL POSITION SWITCH
(a) Remove the control shaft lever.
(b) Pry off the lock washer and remove the nut.
(c) Remove the bolt and pull out the park/neutral position switch.
4. INSTALL AND ADJUST PARK/NEUTRAL POSITION SWITCH
5. CONNECT PARK/NEUTRAL POSITION SWITCH CONNECTOR
6. INSTALL FRONT EXHAUST PIPE
(See page EG–127)



A/T FLUID TEMP. SENSOR REPLACEMENT

1. DISCONNECT A/T FLUID TEMP. SENSOR CONNECTOR
2. REMOVE A/T FLUID TEMP. SENSOR
(a) Remove the A/T fluid temp. sensor.
(b) Remove the O–ring.
3. INSTALL A/T FLUID TEMP. SENSOR
(a) Coat a new O–ring with A/T fluid and install it to the A/T fluid temp. sensor.
(b) Install the A/T fluid temp. sensor.
·**Torque: 15 N·m (150 kgf·cm, 11 ft·lbf)**
4. CONNECT A/T FLUID TEMP. SENSOR CONNECTOR

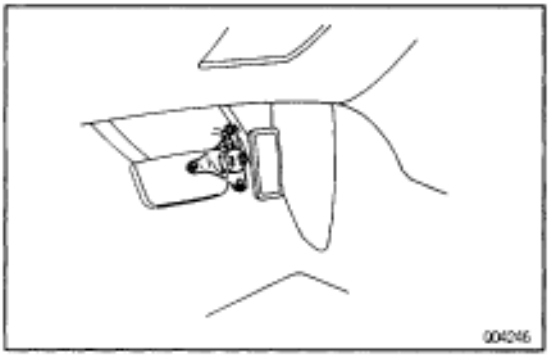

KICK–DOWN SWITCH REPLACEMENT

1. REMOVAL OF KICK–DOWN SWITCH
(a) Remove the 3 bolts and kick–down switch.
(b) Disconnect the kick–down switch connector.
2. INSTALLATION OF KICK–DOWN SWITCH
(a) Connect the kick–down switch connector.
(b) Install the kick–down switch and 3 bolts.

VALVE BODY REMOVAL

Installation is in the reverse order of removal.

INSTALLATION HINT: After installation, fill A/T fluid and check fluid level. (See page AT1–42)

1. RAISE VEHICLE AND CLEAN TRANSMISSION EXTERIOR

To prevent contamination, clean the exterior of the transmission.

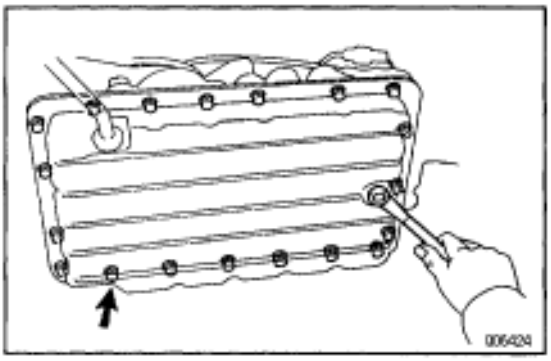

2. DRAIN TRANSMISSION

Remove the drain plug and drain fluid into a suitable container.

Torque: 20 N·m (205 kgf·cm, 15 ft·lbf)

3. REMOVE OIL PAN

REMOVAL NOTICE: Some fluid will remain in the oil pan.

(a) Remove the 19 bolts.

Torque: 7.4 N·m (75 kgf·cm, 65 in.·lbf)

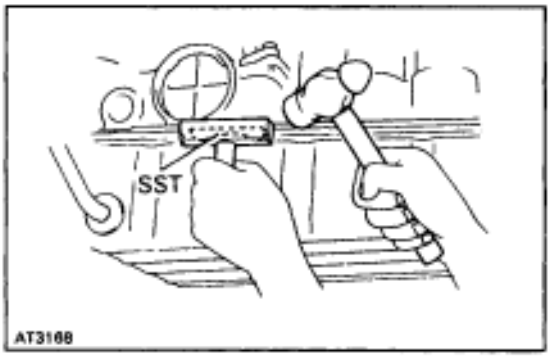

(b) Install the blade of SST between the transmission case and oil pan, cut off applied sealer and then remove the oil pan.

SST 09032–00100

REMOVAL NOTICE: When removing the oil pan, be careful not to damage the oil pan flange.

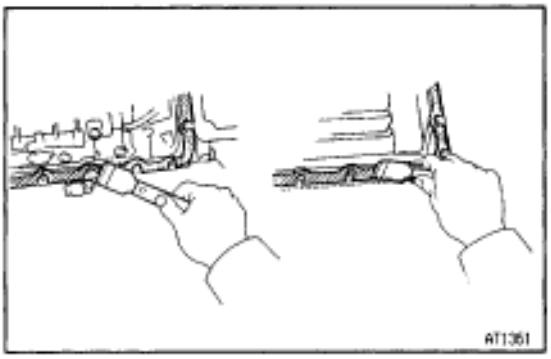

INSTALLATION HINT:

- Remove any packing material and be careful not to drop oil on the contacting surfaces of the oil pan and transmission case.
- Clean contacting surfaces of any residual packing material using gasoline or alcohol.

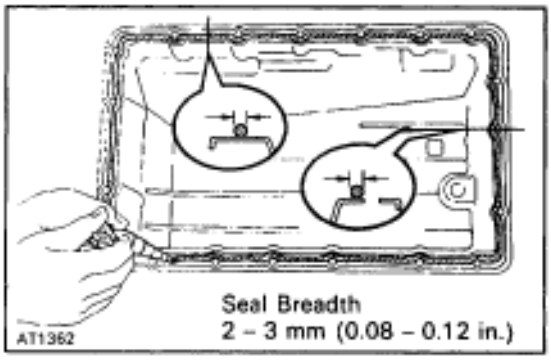

- Apply FIPG to the oil pan.

FIPG:

Part No. 08826–00090, THREE BOND 1281 or equivalent

- Install the oil pan within 10 minutes after applying FIPG.

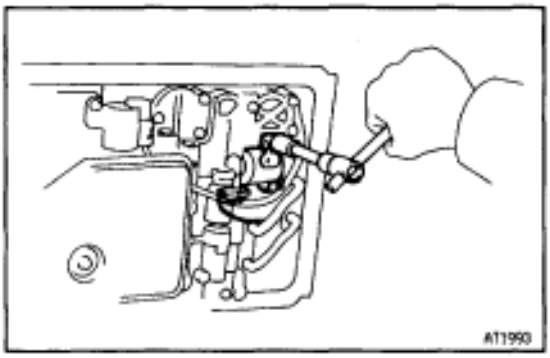

4. WHEN REPLACING 3 SOLENOIDS

(a) Disconnect the connectors from the solenoids.

(b) Remove the solenoid mounting bolts.
Torque: 10 N·m (100 kgf·cm, 7 ft·lbf)

(c) Remove the solenoids.

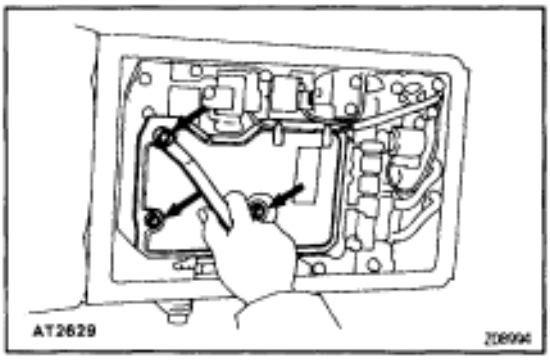

5. REMOVE OIL STRAINER

REMOVAL NOTICE: Be careful as some fluid will come out with the oil strainer.

Remove the 3 bolts, and the oil strainer and gasket.
Torque: 10 N·m (100 kgf·cm, 7 ft·lbf)

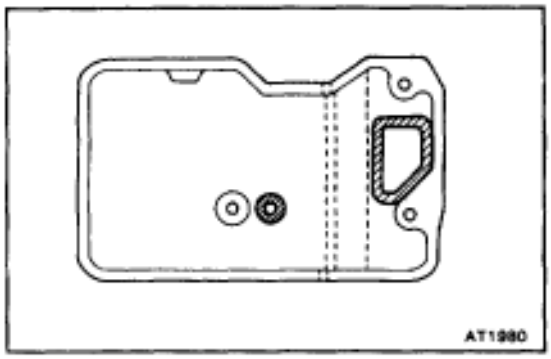

INSTALLATION HINT: If necessary, replace the strainer or case gasket.

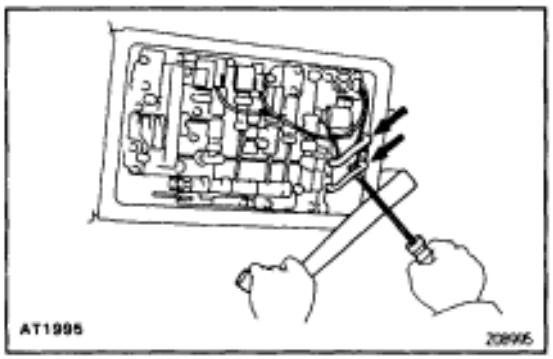

6. REMOVE OIL PIPES

Pry up both pipe ends with a large screwdriver and remove the 2 pipes.

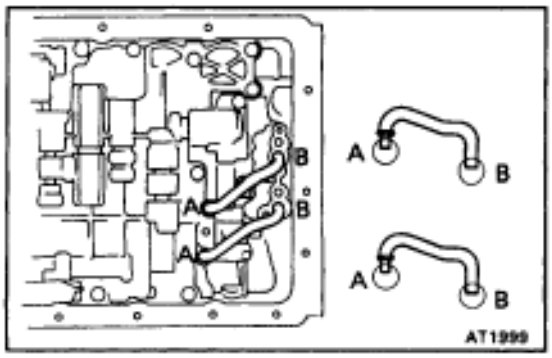

INSTALLATION NOTICE: Make sure that the oil pipes or the magnets do not interfere with the oil pan.

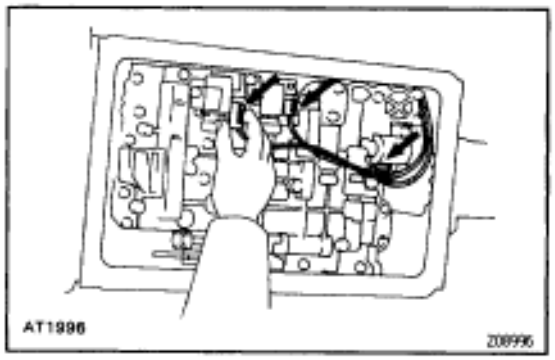

7. DISCONNECT CONNECTORS FROM EACH SOLENOID

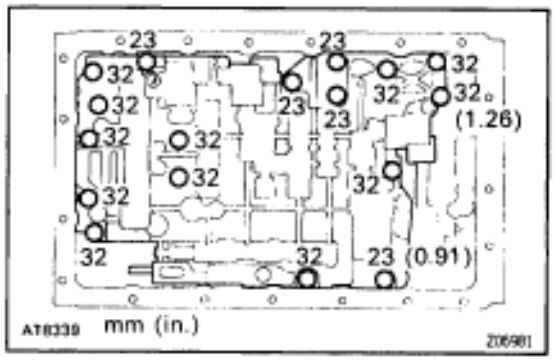

8. REMOVE VALVE BODY

(a) Remove the 17 bolts.

Torque: 10 N·m (100 kgf·cm, 7 ft·lbf)

INSTALLATION HINT: Each bolt length is indicated in the illustration.

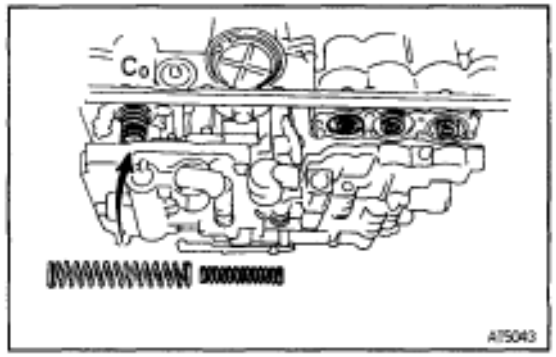

(b) Remove the 2 C_0 accumulator piston springs.

- **C_0 accumulator piston spring**

Spring	Outer	Inner
Free length	74.6 (2.937)	46.0 (1.811)
Outer diameter	20.9 (0.823)	14.0 (0.551)
Color	Orange	Yellow

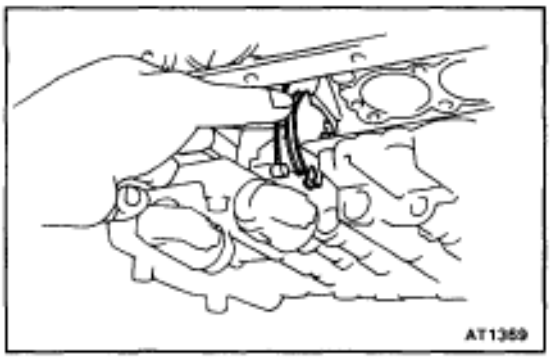

(c) Disconnect the throttle cable from the cam.

(d) Remove the valve body.

REMOVAL HINT: Be careful not to drop the check ball body and spring.

INSTALLATION HINT:

- Install the body together the check ball body and spring.
- Align the groove of the manual valve to the pin of the lever.

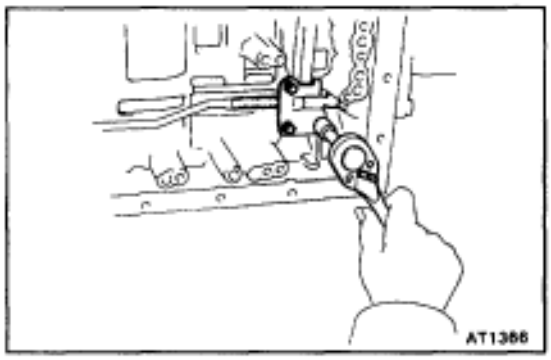

PARKING LOCK PAWL REMOVAL

Installation is in the reverse order of removal.

1. **REMOVE VALVE BODY (See page AT1–16)**
2. **REMOVE PARKING LOCK PAWL BRACKET**

INSTALLATION HINT:

- Push the lock rod fully forward.
- Install the 3 bolts finger tight.
- Check that the parking lock pawl operates smoothly.

Torque: 7.4 N·m (75 kgf·cm, 65 in.·lbf)

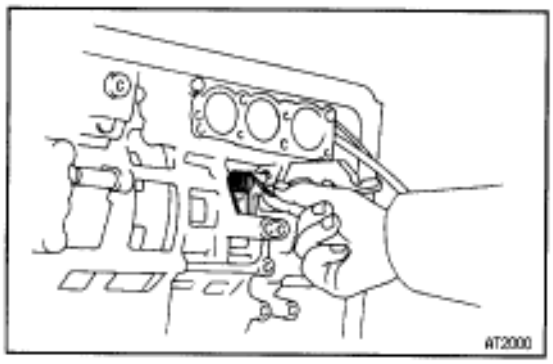

3. **REMOVE SPRING FROM PARKING LOCK PAWL SHAFT**

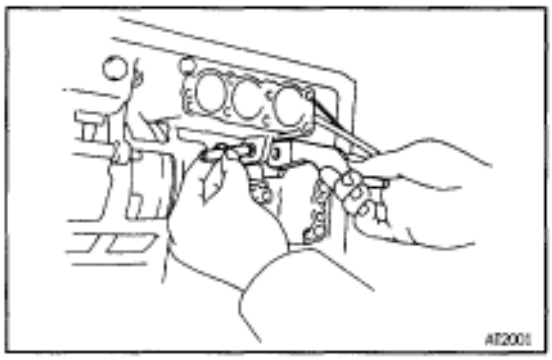

4. **REMOVE PARKING LOCK PAWL AND SHAFT**

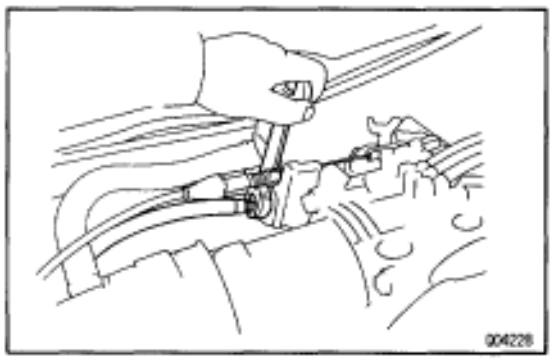

THROTTLE CABLE REPLACEMENT

1. **DISCONNECT THROTTLE CABLE**

(a) Disconnect the cable housing from the bracket.
(b) Disconnect the cable from the throttle linkage.

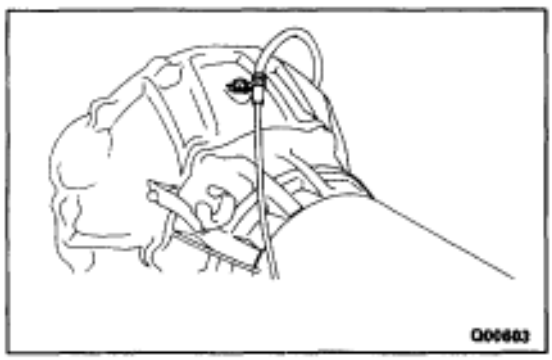

(c) Disconnect the cable from the torque converter clutch housing.

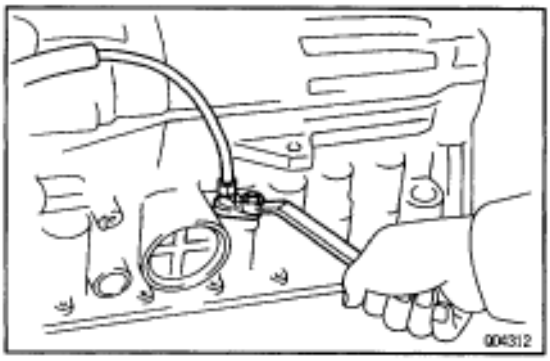

2. **REMOVE VALVE BODY**
(See page AT1–16)
3. **PUSH THROTTLE CABLE OUT OF TRANSMISSION CASE**
Remove the retaining bolt and pull out the throttle cable.
4. **INSTALL THROTTLE CABLE**
Install the retaining bolt and push in the throttle cable.
5. **INSTALL VALVE BODY**
(See page AT1–16)

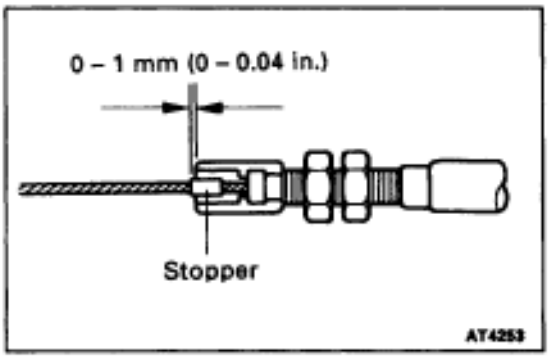

6. **IF THROTTLE CABLE IS NEW, STAKE STOPPER ON INNER CABLE**
(a) Pull in the slack of the inner cable.
(b) Stake the stopper, as shown, 0–1 mm (0–0.04 in.) from the end of outer cable.

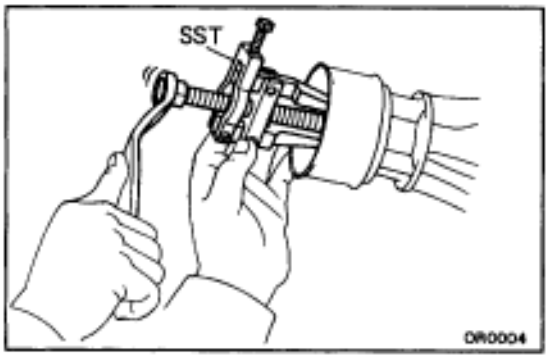

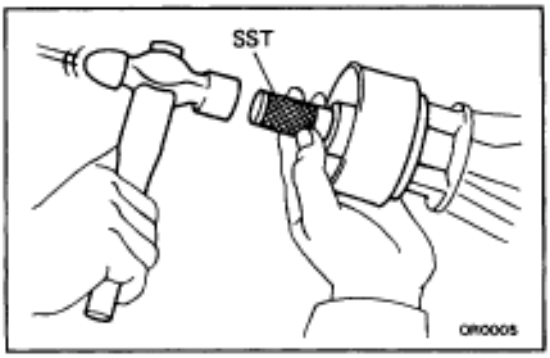

OIL SEAL REPLACEMENT

1. **RAISE VEHICLE AND POSITION PAN TO CATCH ANY FLUID THAT MAY DRIP**
2. **REMOVE PROPELLER SHAFT TOGETHER WITH CENTER BEARING**
3. **REMOVE REAR OIL SEAL**
NOTICE: Clean the extension housing before removing the oil seal.
Using SST, remove the oil seal.
SST 09308–10010
4. **INSTALL NEW OIL SEAL**
Using SST and a hammer, drive in a new oil seal as far as it will go.
SST 09325–40010
5. **INSTALL PROPELLER SHAFT**
6. **LOWER VEHICLE AND CHECK FLUID LEVEL**
(See page AT1–42)
Add fluid as necessary.
NOTICE: Do not overfill.
Fluid type:
ATF DEXRON® II

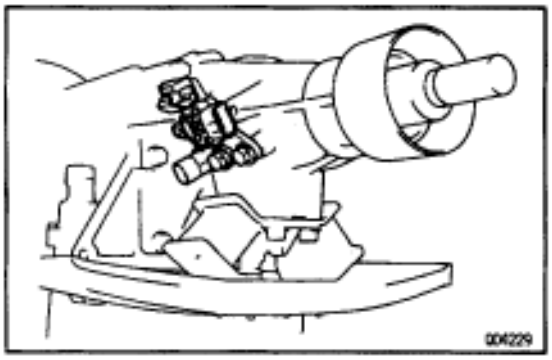

EXTENSION HOUSING REMOVAL

Installation is in the reverse order of removal.

INSTALLATION HINT: After installation, fill A/T fluid and check fluid lever. (See page AT1–42)

1. **RAISE VEHICLE AND POSITION PAN TO CATCH ANY FLUID THAT MAY DRIP**
2. **REMOVE PROPELLER SHAFT TOGETHER WITH CENTER BEARING.**
3. **DISCONNECT NO. 1 AND NO. 2 VEHICLE SPEED SENSOR CONNECTORS AND REMOVE SENSORS**
4. **REMOVE SPEEDOMETER DRIVEN GEAR**
5. **JACK UP TRANSMISSION SLIGHTLY**

   Securely support the transmission on a transmission jack. Lift the transmission slightly to remove weight from the rear support member.

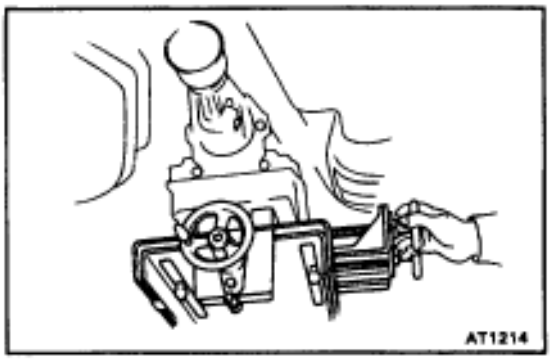

6. **REMOVE REAR SUPPORT MEMBER**

   Remove the 4 bolts, nuts and support member.

   Torque: 25 N·m (260 kgf·cm, 19 ft·lbf)

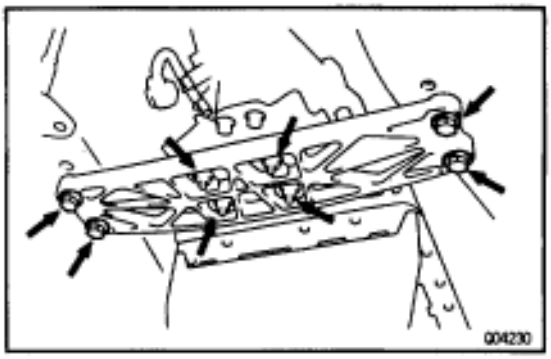

7. **REMOVE TRANSMISSION MOUNTING BRACKET**

   Remove the 4 bolts and bracket from the transmission.

   Torque: 25 N·m (250 kgf·cm, 18 ft·lbf)

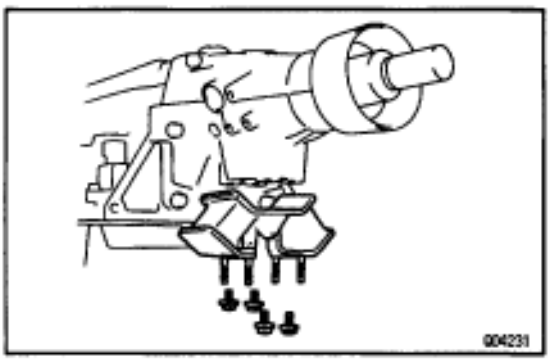

8. **REMOVE EXTENSION HOUSING AND GASKET**

   Remove the 6 bolts. If necessary, tap the extension housing with a plastic hammer or block of wood to loosen it.

   INSTALLATION HINT: The 2 lower bolts are shorter.

   Torque: 36 N·m (370 kgf·cm, 27 ft·lbf)

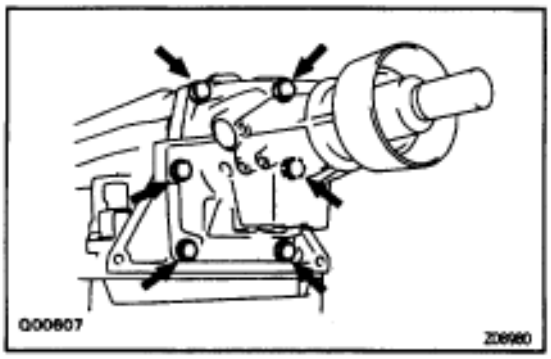

ASSEMBLY REMOVAL AND INSTALLATION

Remove and install the part, as shown.

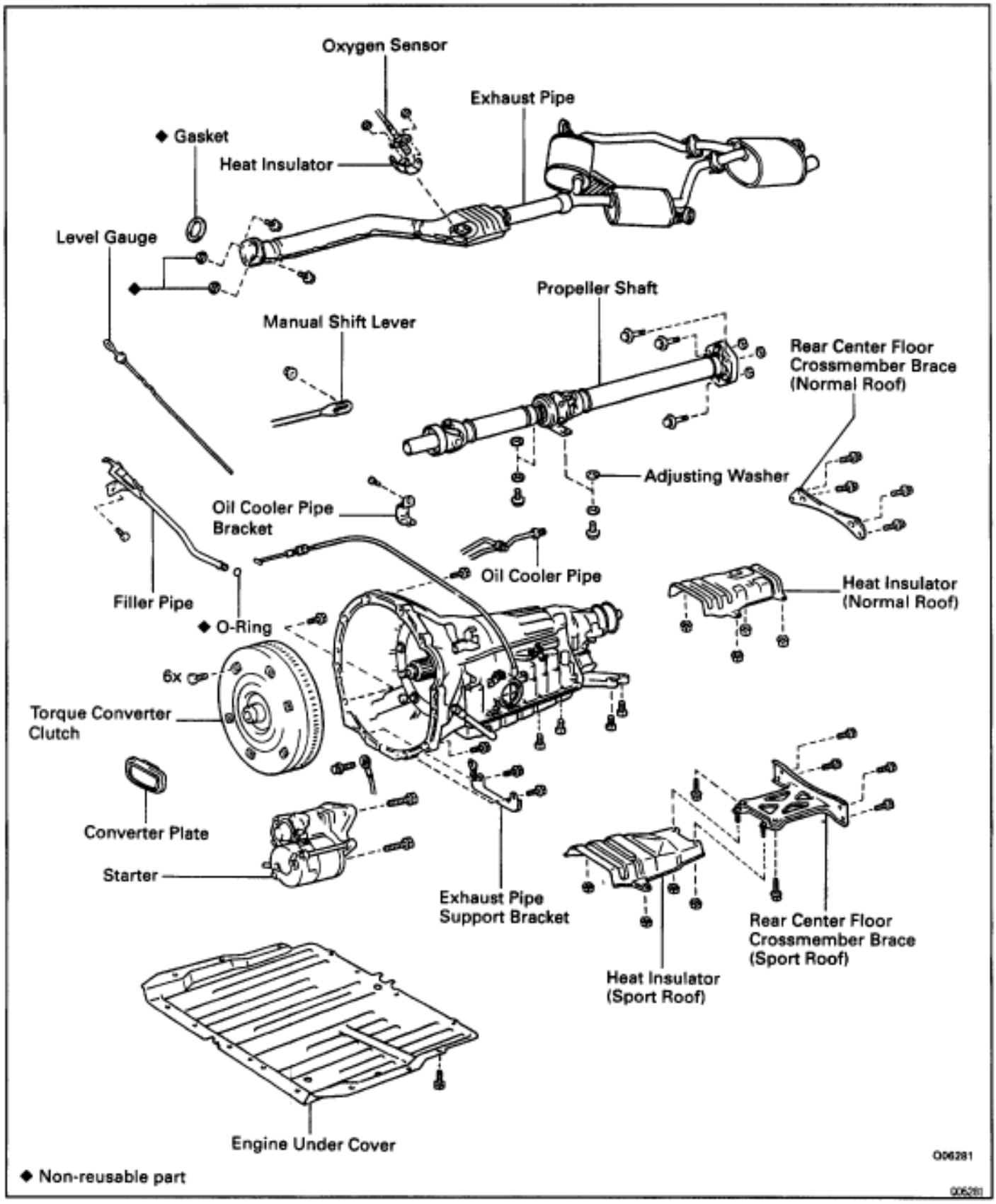

TRANSMISSION REMOVAL

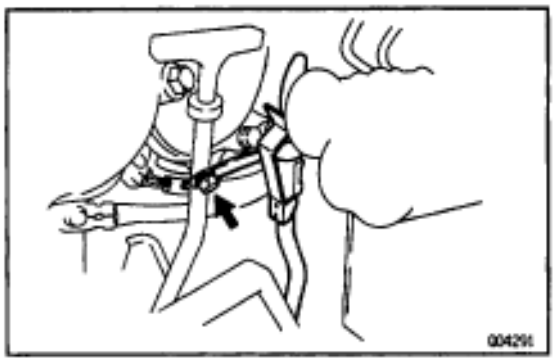

Installation is in the reverse order of removal.
INSTALLATION HINT: After installation, fill A/T fluid and check fluid level. (See page AT1–42)

1. **REMOVE A/T FLUID LEVEL GAUGE**
2. **REMOVE FILLER PIPE**
Remove the bolt and pipe.

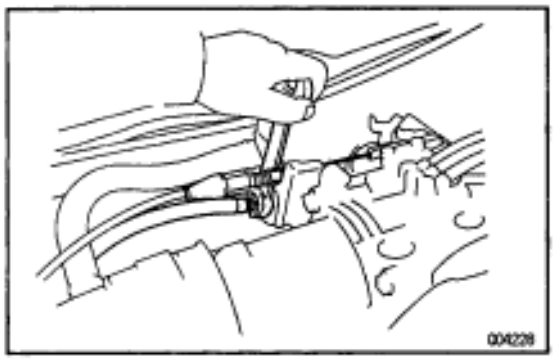

3. **DISCONNECT THROTTLE CABLE**

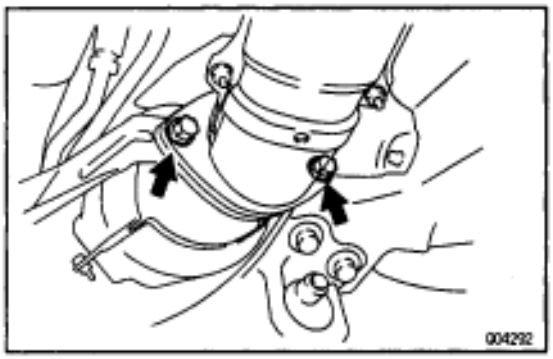

4. **REMOVE EXHAUST PIPE**
(See page EG–83)

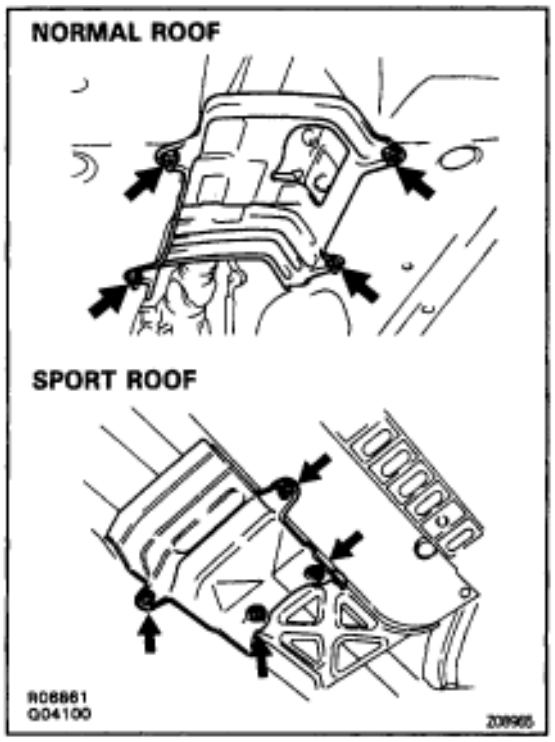

5. **REMOVE HEAT INSULATOR**
Remove the 4 nuts and the heat insulator.
Torque: 5.4 N·m (55 kgf·cm, 48 in.·lbf)

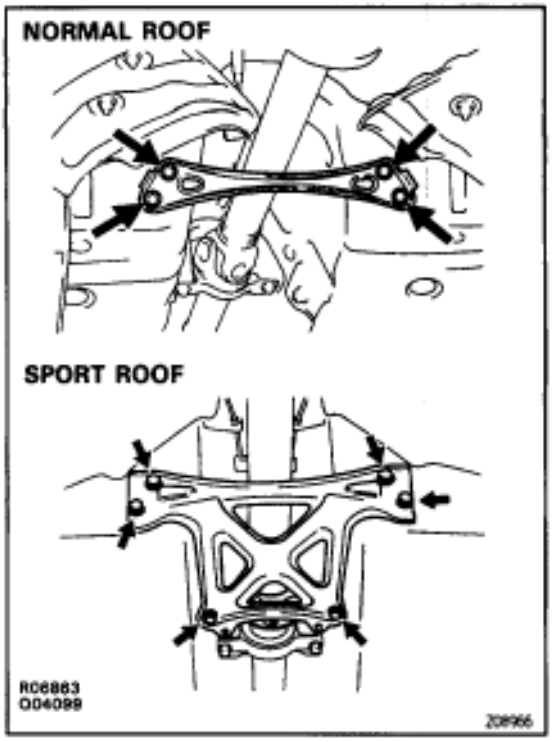

6. REMOVE REAR CENTER FLOOR CROSSMEMBER BRACE

Normal Roof:

Remove the 4 bolts and center floor crossmember brace.

Torque: 13 N·m (130 kgf·cm, 9 ft·lbf)

Sport Roof:

Remove the 6 bolts and center floor crossmember brace.

Torque: 13 N·m (130 kgf·cm, 9 ft·lbf)

7. REMOVE PROPELLER SHAFT

(See page PR–7)

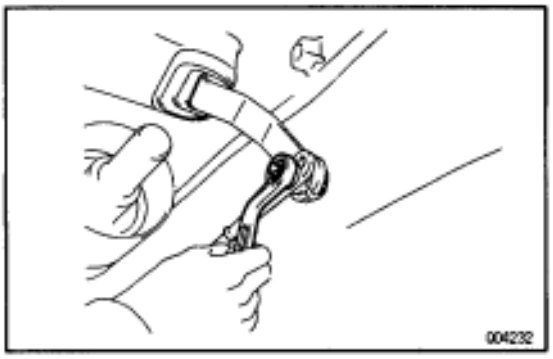

8. REMOVE SHIFT CONTROL ROD

(a) Remove the nut from shift lever.

INSTALLATION HINT: Inspect and adjust the park/ neutral position switch.

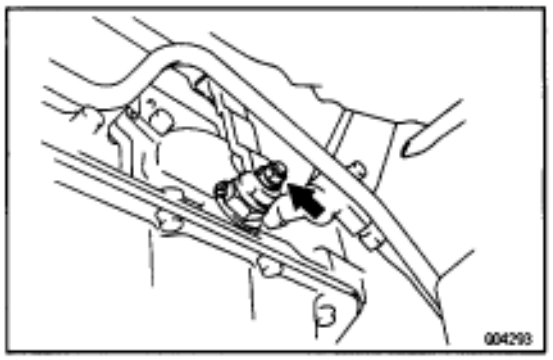

(b) Remove the nut and control rod with the control shaft lever.

Torque: 16 N·m (160 kgf·cm, 12 ft·lbf)

9. DISCONNECT THESE CONNECTORS

- No.1 vehicle speed sensor connector
- No.2 vehicle speed sensor connector
- Solenoid wire connector
- Sensor cover
- A/T fluid temp. sensor connector
- Park/neutral position switch connector

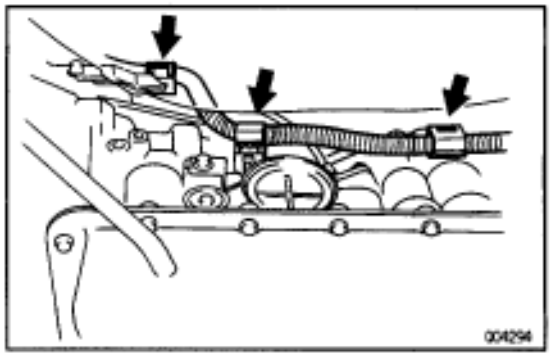

10. DISCONNECT 3 WIRE CLAMPS FROM THE BRACKET ON TRANSMISSION

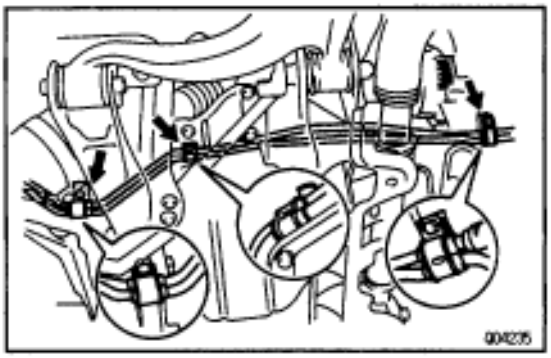

11. DISCONNECT OIL COOLER PIPES

(a) Remove the 3 bolts and oil cooler pipe clamps.

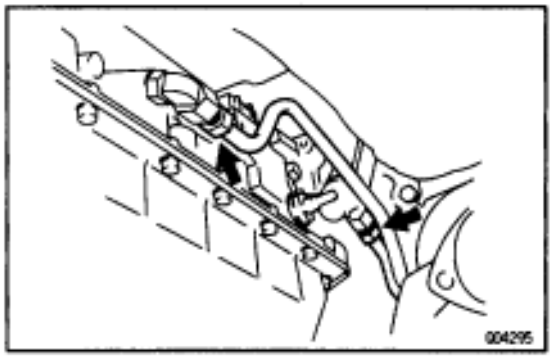

(b) Disconnect the 2 oil cooler pipes.
Torque: 34 N·m (350 kgf·cm, 25 ft·lbf)

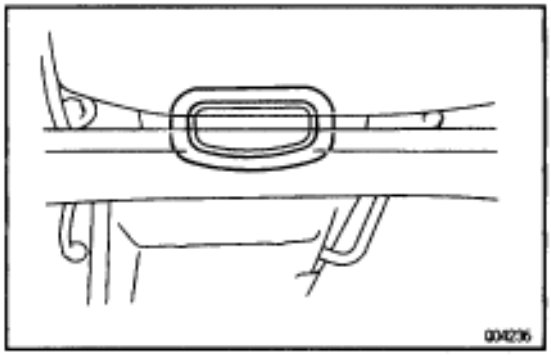

12. REMOVE TORQUE CONVERTER CLUTCH MOUNTING BOLTS

(a) Remove the engine under cover.
(b) Remove the converter plate.

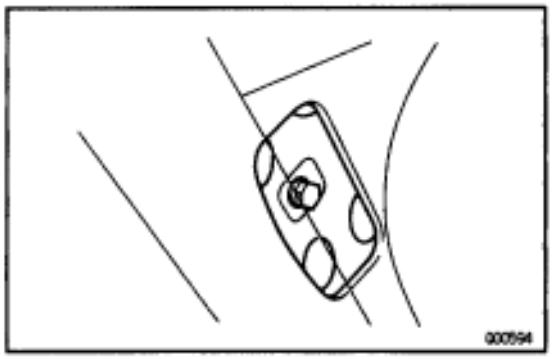

(c) Turn the crankshaft to gain access to each bolt.
Remove the 6 bolts.
Torque: 33 N·m (340 kgf·cm, 25 ft·lbf)

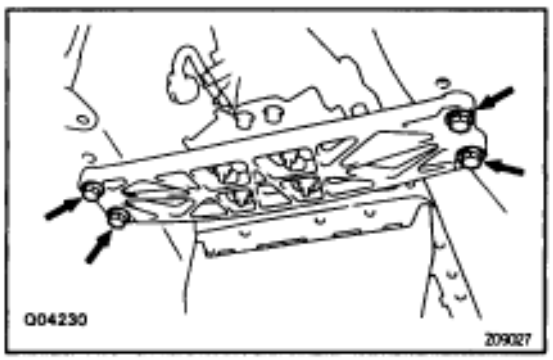

13. JACK UP TRANSMISSION

14. REMOVE REAR MOUNTING

Remove the 4 bolts and rear mounting.
Torque: 25 N·m (260 kgf·cm, 19 ft·lbf)

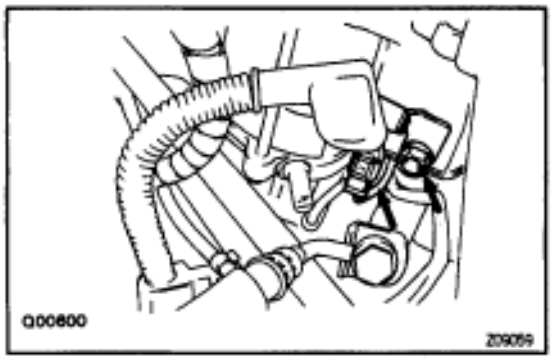

15. REMOVE STARTER

(a) Disconnect the connector.

(b) Remove the nut and cable.

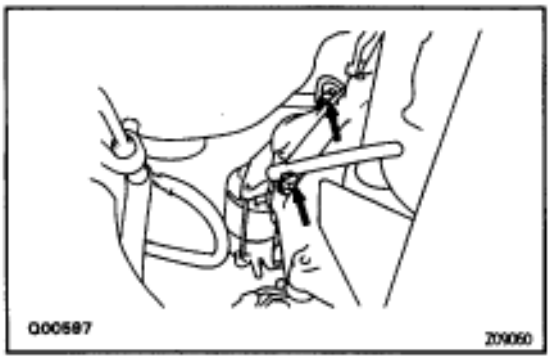

(c) Remove the 2 bolts and starter.
Torque: 37 N·m (380 kgf·cm, 27 ft·lbf)

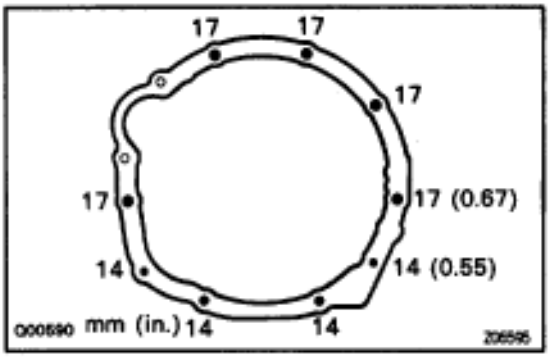

16. REMOVE TRANSMISSION

Remove the 9 bolts and transmission.
Torque:
14 mm head bolt: 37 N·m (380 kgf·cm, 27 ft·lbf)
17 mm head bolt: 72 N·m (730 kgf·cm, 53 ft·lbf)

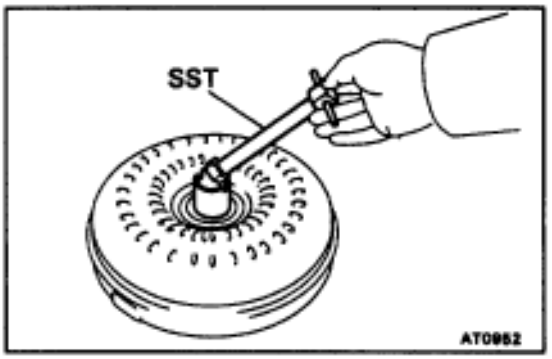

TORQUE CONVERTER CLUTCH AND DRIVE PLATE INSPECTION

1. INSPECT ONE–WAY CLUTCH

(a) Install SST in the inner race of one–way clutch.
SST 09350–30020 (09351–32010)

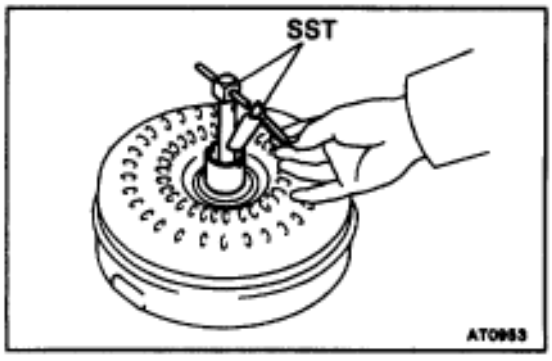

(b) Install SST so that it fits in the notch of the converter hub and outer race of the one–way clutch.
SST 09350–30020 (09351–32020)

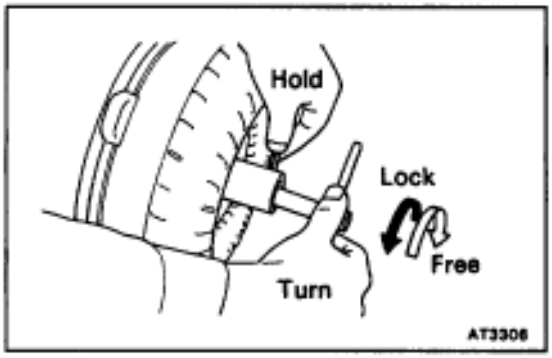

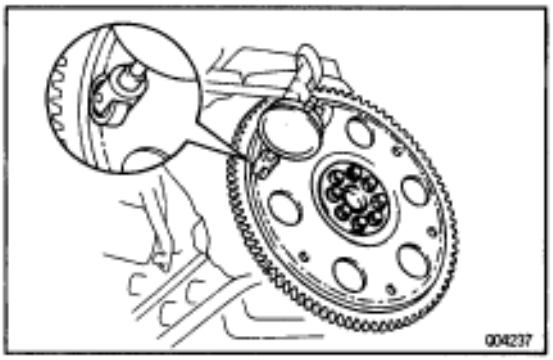

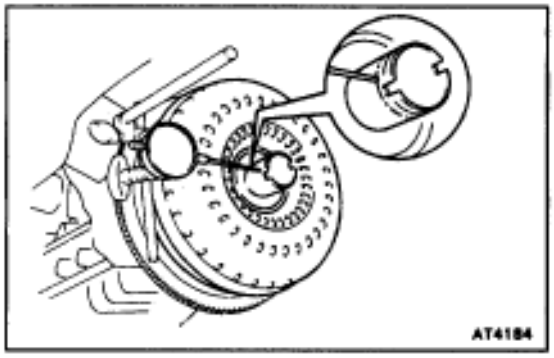

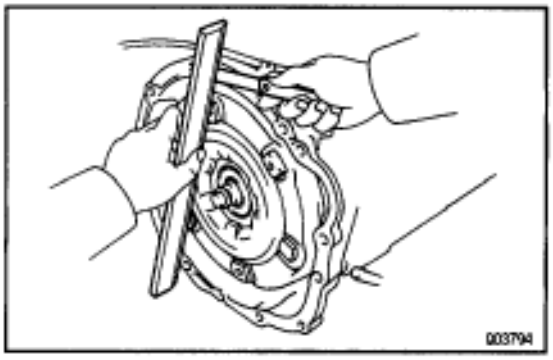

(c) With the torque converter clutch standing on its side the clutch should lock when turned counterclockwise, and rotate freely and smoothly clockwise.
If necessary, clean the converter clutch and retest the clutch. Replace the converter if the clutch still fails the test.

2. MEASURE DRIVE PLATE RUNOUT AND INSPECT RING GEAR

Set up a dial indicator and measure the drive plate runout.
Maximum runout:
0.20 mm (0.0079 in.)
If runout exceeds 0.20 mm (0.0079 in.) or if the ring gear is damaged, replace the drive plate. If installing a new drive plate, note the orientation of spacers and tighten the bolts.
Torque: 74 N·m (750 kgf·cm, 54 ft·lbf)

3. MEASURE TORQUE CONVERTER CLUTCH SLEEVE RUNOUT

(a) Temporarily mount the torque converter clutch to the drive plate. Set up a dial indicator.
Maximum runout:
0.30 mm (0.0118 in.)
If runout exceeds 0.30 mm (0.0118 in.), try to correct by reorienting the installation of the converter clutch. If excessive runout cannot be corrected, replace the torque converter clutch.
HINT: Mark the position of the converter clutch to ensure correct installation.

(b) Remove the torque converter clutch.

TORQUE CONVERTER CLUTCH INSTALLATION

1. INSTALL TORQUE CONVERTER CLUTCH TRANSMISSION

2. CHECK TORQUE CONVERTER CLUTCH INSTALLATION

Using feeler gauge and a straight edge, measure between the installed surface of the transmission and the straight edge.
Clearance:
Less than 0.1 mm (0.004 in.)

SHIFT LOCK SYSTEM

COMPONENT PARTS LOCATION

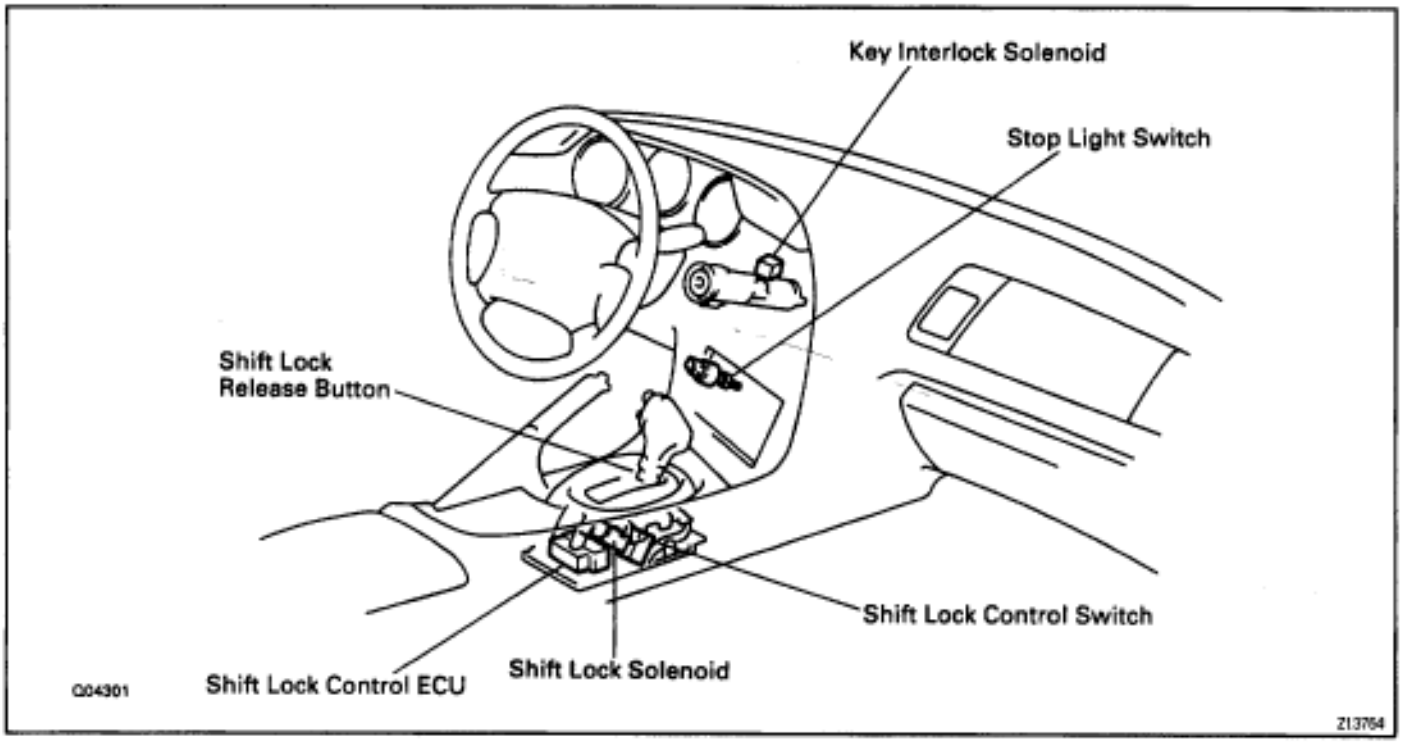

WIRING DIAGRAM

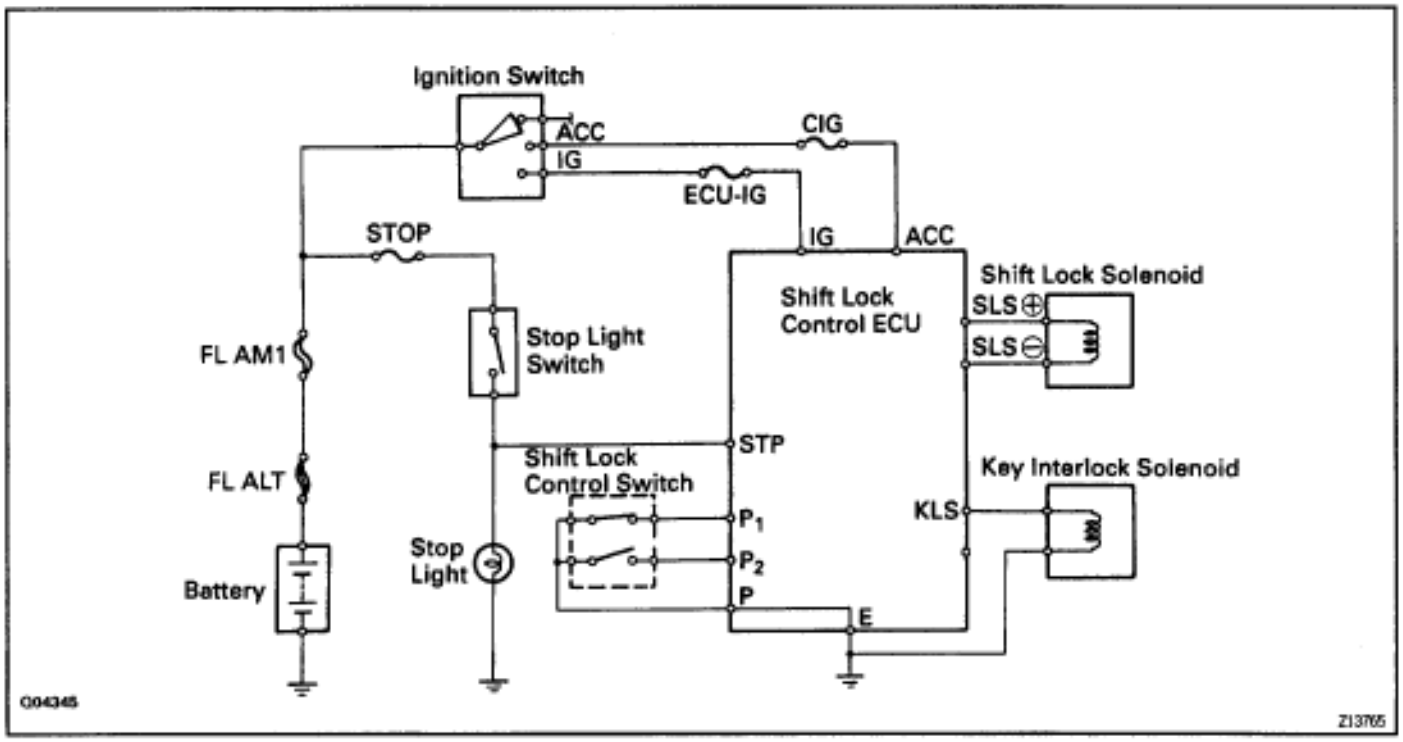

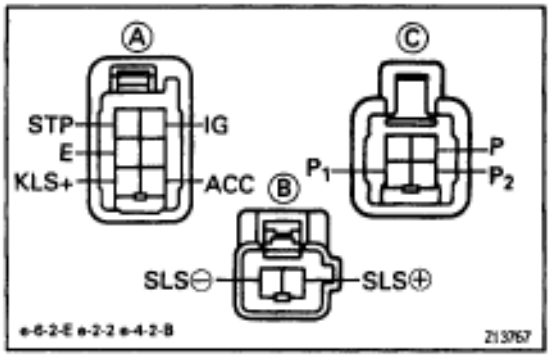

ELECTRONIC CONTROL COMPONENTS INSPECTION

1. INSPECT SHIFT LOCK CONTROL ECU

Using a voltmeter, measure the voltage at each terminal.

Connector	Terminal	Measuring condition		Voltage (V)
A	ACC – E	IG SW ACC		10 – 14
	IG – E	IG SW ON		10 – 14
	STP – E	Depress brake pedal		10 – 14
	KLS – E	(1)	IG SW ACC and P position	Below 1
		(2)	R, N, D, 2, L position	7.5 – 11
		(3)	R, N, D, 2, L position (after 1 second)	6 – 9.5
B	SLS (–) – SLS (+)	(1)	IG SW ON and P position	Below 1
		(2)	Depress brake pedal	8 – 13.5
		(3)	Depress brake pedal (after 20 seconds)	6 – 8.5
		(4)	R, N, D, 2, L position	Below 1
C	P_1 – P	(1)	IG SW ON, P position and depress brake pedal	Below 1
		(2)	R, N, D, 2, L position	9 – 13.5
	P_2 – P	(1)	IG SW ACC and P position	9 – 13.5
		(2)	R, N, D, 2, L position	Below 1

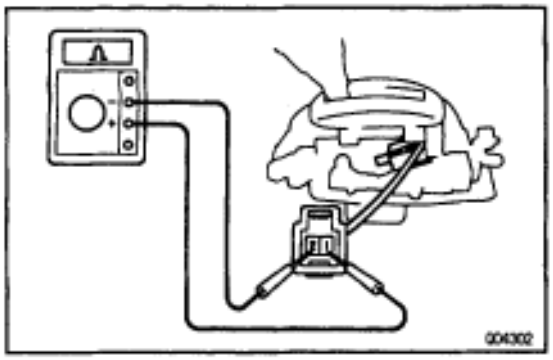

2. INSPECT SHIFT LOCK SOLENOID

(a) Disconnect the solenoid connector.

(b) Using an ohmmeter, measure the resistance between terminals 1 and 2.

Standard resistance:

20–28 Ω

If resistance value is not as specified, replace the solenoid.

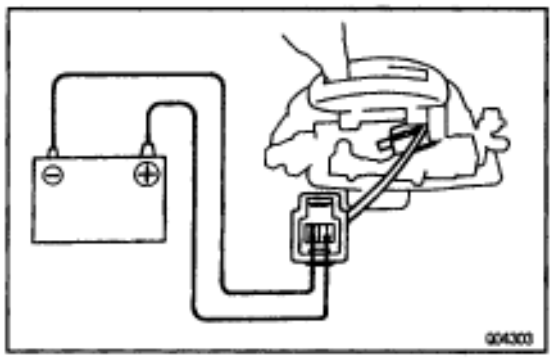

(c) Apply battery positive voltage between terminals 1 and 2. At this time, confirm that the solenoid operates.
If the solenoid does not operated, replace the solenoid.

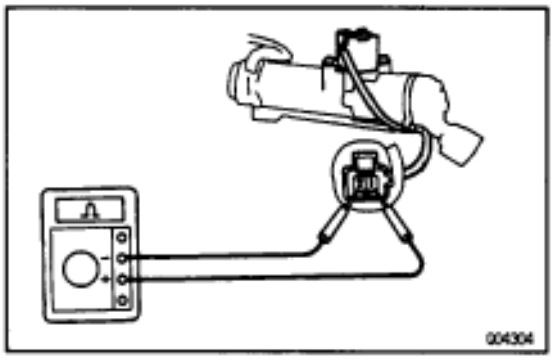

3. INSPECT KEY INTERLOCK SOLENOID

(a) Disconnect the solenoid connector.

(b) Using an ohmmeter, measure the resistance between terminals 1 and 2.

Standard resistance:

12–17 Ω

If resistance value is not as specified, replace the solenoid.

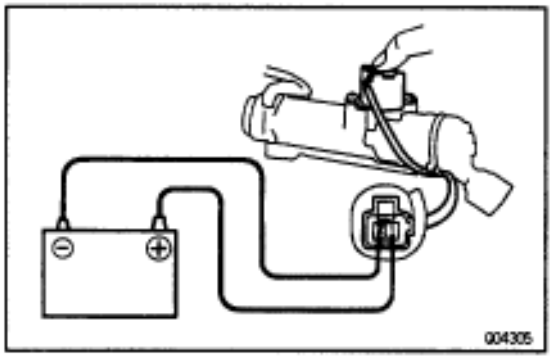

(c) Touch the solenoid with your finger and check that solenoid operation can be felt when battery positive voltage is applied intermittently to the terminals 1 and 2.

If the solenoid does not operated, replace the solenoid.

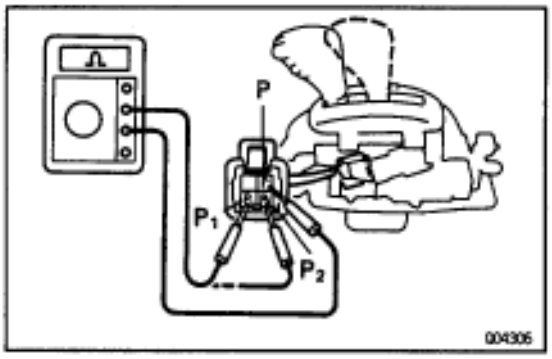

4. INSPECT SHIFT LOCK CONTROL SWITCH

Inspect that there is continuity between each terminal.

Shift position	Tester condition to terminal number	Specified value
P position (Release button is not pushed)	$P–P_1$	Continuity
R, N, D, 2, L position	$P–P_2$	Continuity

TROUBLESHOOTING

HOW TO PROCEED WITH TROUBLESHOOTING

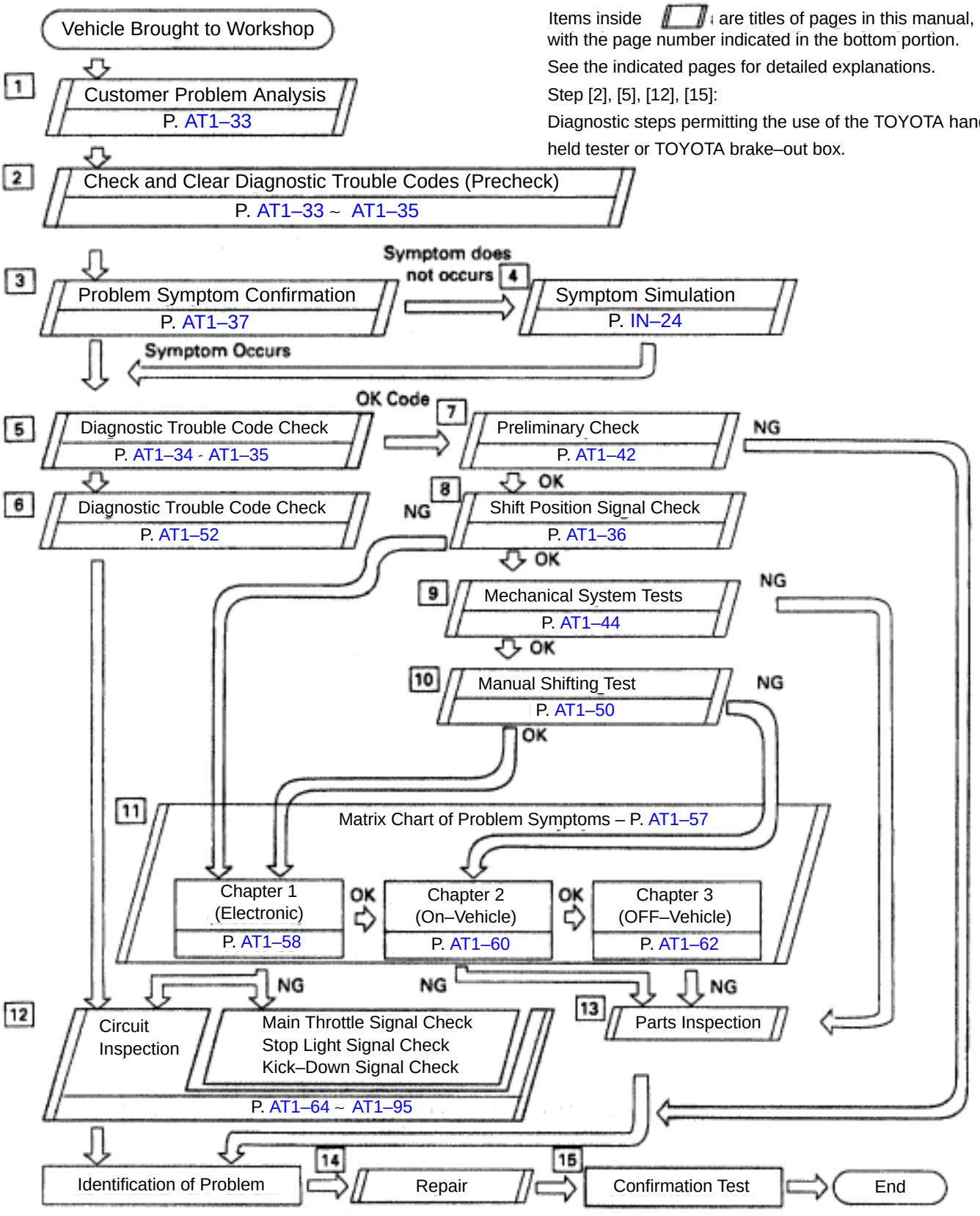

CUSTOMER PROBLEM ANALYSIS

Electronically Controlled Transmission Check Sheet

Inspector's Name:

Customer's Name		**Registration No.**	
		Registration Year	/ /
		Frame No.	
Date Vehicle Brought In	/ /	**Odometer Reading**	km Mile

Date Problem Occurred	/ /
How Often Does Problem Occur?	☐ Continuous ☐ Intermittent (times a day)

Symptoms	☐ Vehicle does not move. (☐ Any position ☐ Particular position)
	☐ No up-shift (☐ 1st → 2nd ☐ 2nd → 3rd ☐ 3rd → O/D)
	☐ No down-shift (☐ O/D → 3rd ☐ 3rd → 2nd ☐ 2nd → 1st)
	☐ Lock-up malfunction
	☐ Shift point too high or too low.
	☐ Harsh engagement (☐ N → D ☐ Lock-up ☐ Any drive position)
	☐ Slip or shudder
	☐ No Kick-down
	☐ No pattern select
	☐ Others ( )

Check Item	**Malfunction Indicator Lamp**	☐ Normal ☐ Remains ON

Diagnostic Trouble Code Check (O/D OFF Indicator Light)	**1st Time**	☐ Normal Code ☐ Malfunction Code (Code)
	2nd Time	☐ Normal Code ☐ Malfunction Code (Code)

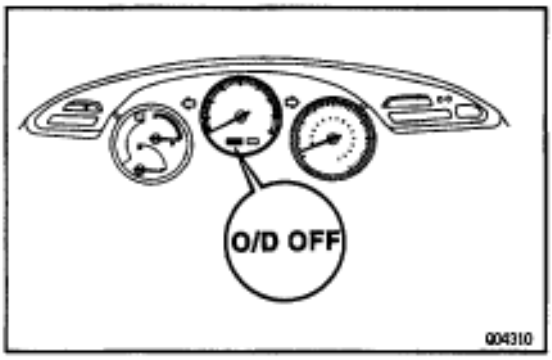

DIAGNOSIS SYSTEM

The Electronically Controlled Transmission has built–in self–diagnostic functions. If a malfunction occurs in the system, the ECM stores the diagnostic trouble code in memory and the O/D OFF (Overdrive OFF) indicator light blinks to inform the driver. The diagnostic trouble code stored in memory can be read out by the following procedure.

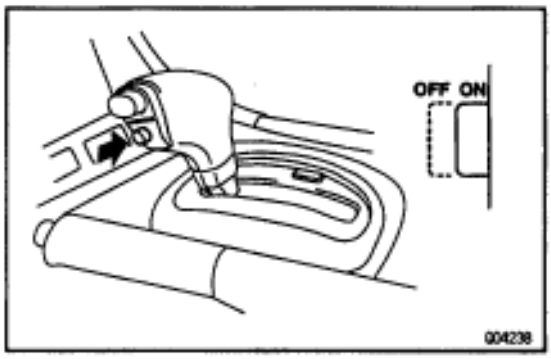

O/D OFF INDICATOR LIGHT INSPECTION

1. Turn the ignition switch ON.
2. Check if the O/D OFF indicator light lights up when the O/D main switch is pushed out to OFF and goes off when the O/D main switch is pushed in to ON.
   HINT: If the O/D OFF indicator light does not light up or stay on all the time, carry out the check for ”O/D OFF Indicator Light Circuit” on page AT1–88.

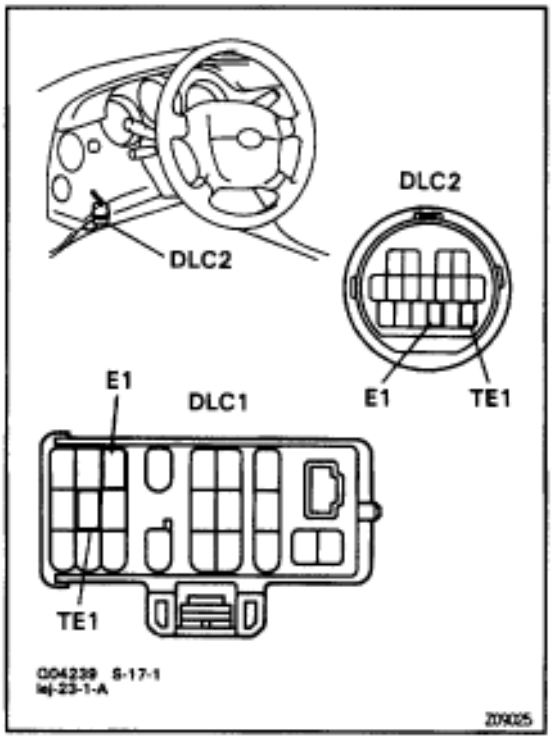

DIAGNOSTIC TROUBLE CODE CHECK

1. Turn the ignition switch ON, but do not start the engine.
2. Push in the O/D main switch to ON.
   HINT: Warning and diagnostic trouble codes can be read only when the O/D main switch is ON. If it is OFF, the O/D OFF indicator light up will light continuously and will not blink.
3. Using SST, connect terminals TE1 and E1 of the DLC 1 or DLC2.
   SST 09843–18020

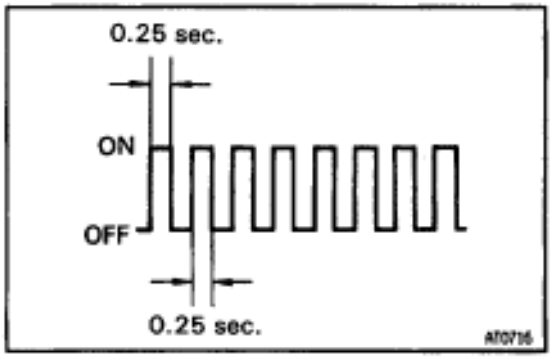

4. Read the diagnostic trouble code indicated by the number of times the O/D OFF indicator light blinks.
   HINT: If the system is operating normally, the light will blink 2 times per second.

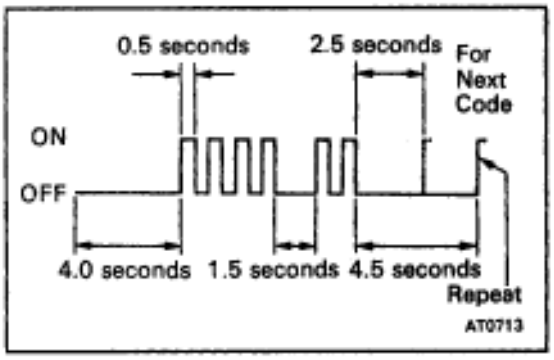

The trouble code is indicated, as shown in the illustration at left (Diagnostic trouble code ”42” is shown as an example).

HINT: When 2 or more trouble codes are stored in memory, the lower–numbered code is displayed first. If no diagnostic trouble code is output, or if a diagnostic trouble code is output even though no diagnostic trouble code output operation is performed, check the TE 1 terminal circuit on page AT1–93.

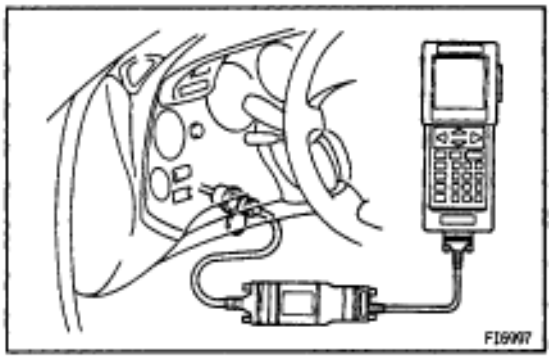

DIAGNOSTIC TROUBLE CODE CHECK BY USING TOYOTA HAND–HELD TESTER

1. Hook up the TOYOTA hand–held tester to the DLC2.
2. Read the diagnostic trouble codes by following the prompts on the tester screen.

   Please refer to the TOYOTA hand–held tester operator’s manual for further details.

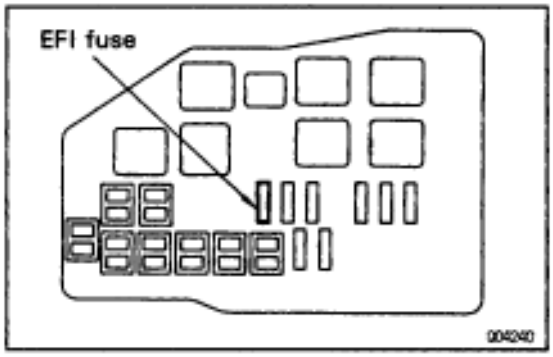

CANCELING DIAGNOSTIC TROUBLE CODE

After repair of the trouble area, the diagnostic trouble code retained in the ECM memory must be canceled out by removing the EFI fuse for 10 seconds or more, with the ignition switch OFF.

Check that the normal code is output after connecting the fuse.

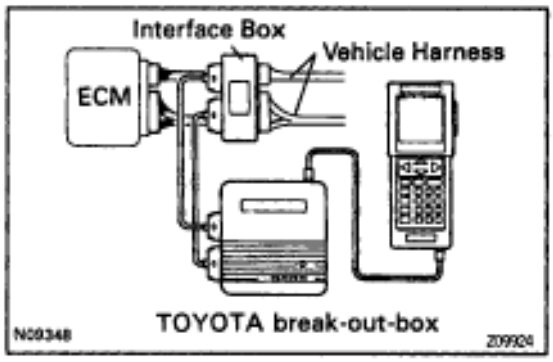

ECM TERMINALS STANDARD VALUE

ECM TERMINAL VALUES

MEASUREMENT BY USING TOYOTA BREAK–OUT –BOX AND TOYOTA HAND–HELD TESTER

1. Hook up the TOYOTA break–out–box and TOYOTA hand–held tester to the vehicle.
2. Read the ECM input/output values by following the prompts on the tester screen.

   HINT: TOYOTA hand–held tester has a ”Snapshot” function. This records the measured values and is effective in the diagnosis of intermittent problems.

   Please refer to the TOYOTA hand–held tester / TOYOTA break–out box operator’s manual for further details.

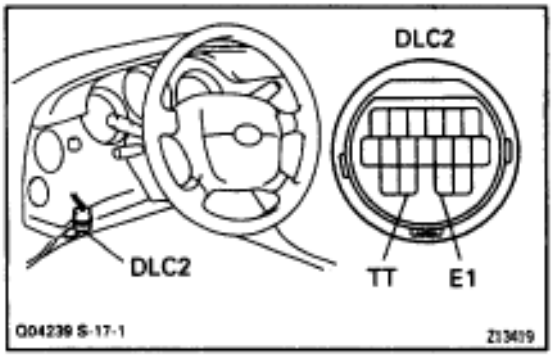

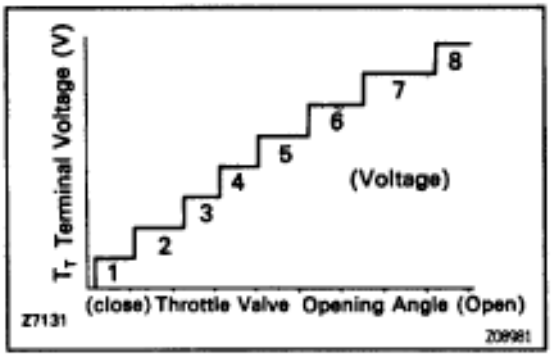

CHECK TERMINAL TT OUTPUT VOLTAGE

When a voltmeter is connected to the DLC2, the following items can be checked:

1. Throttle position sensor signal
2. Brake signal
3. Shift position signal

1. VOLTMETER CONNECTION

Connect the positive (+) probe of the voltmeter to terminal TT and the negative (–) probe to terminal E1 of the DLC2.

HINT: If a voltmeter with small internal resistance is used, the correct voltage will not be indicated, so use a voltmeter with an internal resistance of at least 10 kΩ/V.

2. TURN IGNITION SWITCH TO ON (DO NOT START THE ENGINE)

3. CHECK THROTTLE POSITION SENSOR SIGNAL

Check if the voltage changes from approx. 0 V to approx. 8 V when the accelerator pedal is gradually depressed from the fully closed position.

4. CHECK BRAKE SIGNAL (LOCK–UP CUT SIGNAL)

(a) Open the throttle valve fully to apply approx. 8 V to terminal TT.

(b) In this condition, check terminal TT voltage when the brake pedal is depressed and released.

TT terminal voltage:

0 V (When brake pedal is depressed)
8 V (When brake pedal is released)

5. START ENGINE

6. CHECK SHIFT POSITION SIGNAL
(VEHICLE SPEED ABOVE 9 km/h, 6 mph)

Check up–shifting together with terminal TT voltage.

HINT: Check for light shocks from up–shifting and for changes in the tachometer.

Gear Position	Terminal TT output voltage
1st Gear	0 V
2nd Gear	2 V
2nd Lock–up	3 V
3rd Gear	4 V
3rd Lock–up	5 V
O/D	6 V
O/D Lock–up	7 V

If terminal TT output voltage check cannot be done, do the check of TT terminal circuit on page AT1–95.

PROBLEM SYMPTOM CONFIRMATION

Taking into consideration the results of the customer problem analysis, try to reproduce the symptoms of the trouble. If the problem is that the transmission does not up–shift, does not down–shift, or the shift point is too high or too low, conduct the following road test to confirm the automatic shift schedule and simulate the problem symptoms.

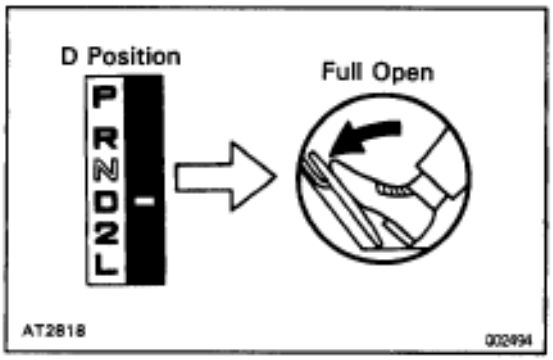

ROAD TEST

NOTICE: Do the test at normal A/T fluid operating temp. 50–80˚C (122 – 176˚F).

1. D POSITION TEST (NORM PATTERN)

Shift into the D position and keep the accelerator pedal constant at the full throttle valve opening position, and check the following points:

(a) Check up–shift operation.

Check that 1–2, 2–3 and 3–O/D up–shift takes place, at the shift point shown in the automatic shift schedule.

(See page AT1–96)

HINT:

(1) O/D Gear Up–shift Prohibition Control.

- Coolant temp. is 60˚C (140˚F) or less.
- If there is a 10 km/h (6 mph) difference between the set cruise control speed and
- vehicle speed.
- O/D main switch is pushed ON.
- (During O/D OFF, indicator light lights up.)

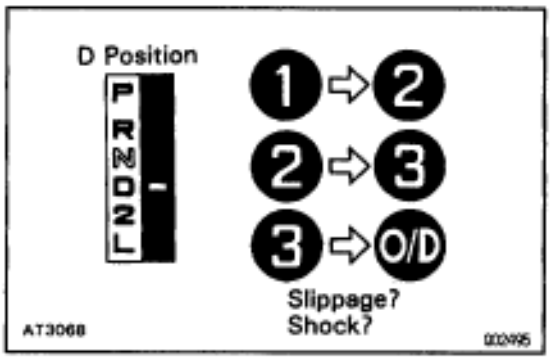

(2) O/D Gear Lock–up Prohibition Control.

- Brake pedal is depressed.
- Coolant temp. is 60˚C (140˚F) or less.

(b) Check for shift shock and slip.

Check for shock and slip at the 1–2, 2–3 and 3–O/ D up–shifts.

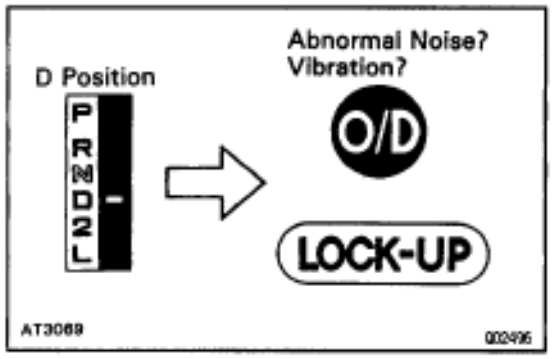

(c) Check for abnormal noise and vibration.

Run at the D position lock–up or O/D gear and check for abnormal noise and vibration.

HINT: The check for the cause of abnormal noise and vibration must be performed very thoroughly as it could also be due to loss of balance in the torque converter clutch, etc.

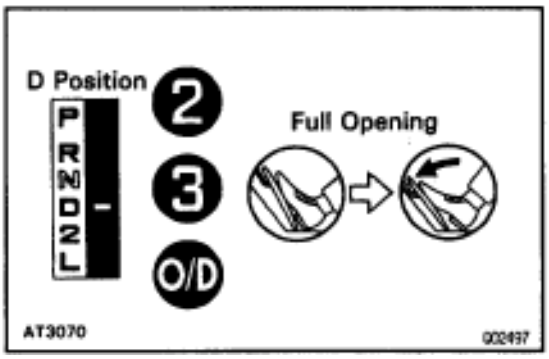

(d). Check kick–down operation.
While running in the D position, 2nd, 3rd and O/D gears, check to see that the possible kick–down vehicle speed limits for 2 → 1, 3 → 2 and O/D → 3 kick–downs conform to those indicated on the automatic shift schedule. (See page AT1–96)

(e) Check for abnormal shock and slip at kick–down.

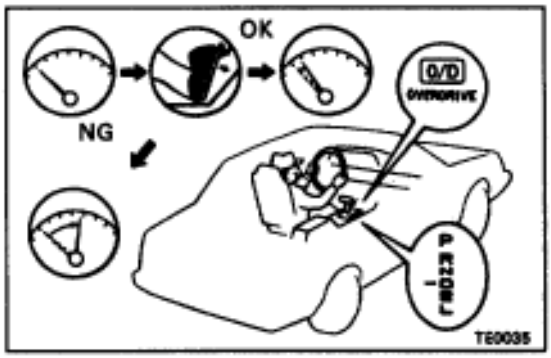

(f) Check the lock–up mechanism.
(1) Drive in D position, O/D gear, at a steady speed (lock–up ON) of about 61 km/h (38 mph).
(2) Lightly depress the accelerator pedal and check that the RPM does not change abruptly.
If there is a big jump in RPM, there is no lock–up.

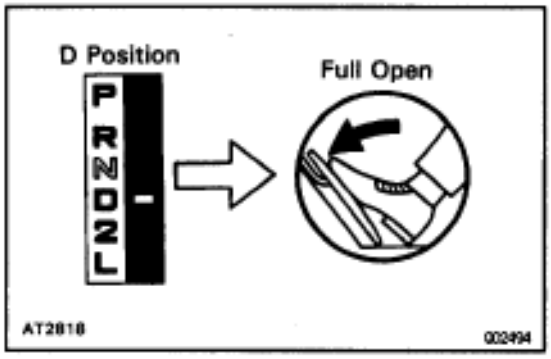

2. D POSITION TEST (MANU PATTERN)

Shift into the D position and hold the accelerator pedal constant at the full throttle valve opening position, and check the following points:

(a) Check up–shift operation.
2–3 and 3–O/D up shifts should take place, and shift points should conform to those shown in the automatic shift schedule.
(See page AT1–96)
HINT:

- O/D up–shift or lock–up will not occur when the engine coolant temp. is below 60°C (140°F) and speed is under 63 km/h (39 mph), or if there is a 10 km/h (6 mph) difference between the set cruise control speed.
- 3rd up–shift or lock–up will not occur when engine coolant temp. is 35°C (95°F) and speed is under 40 km/h (25 mph).

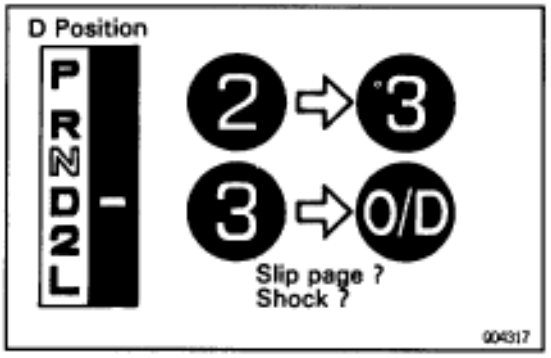

(b) Check for shift shock and slip.
In the same manner, check the shock slip at the 2 → 3 and 3 → O/D up–shifts.

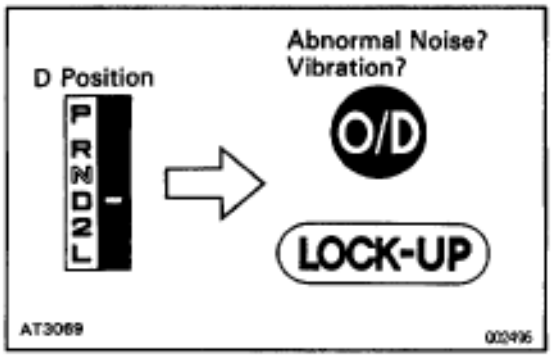

(c) Check for abnormal noise and vibration.
Run at the D position lock–up or O/D gear and check for abnormal noise and vibration.
HINT: The check for the cause of abnormal noise and vibration must be made with extreme care as it could also be due to loss of balance in the propeller shaft, differential, torque converter clutch, etc.

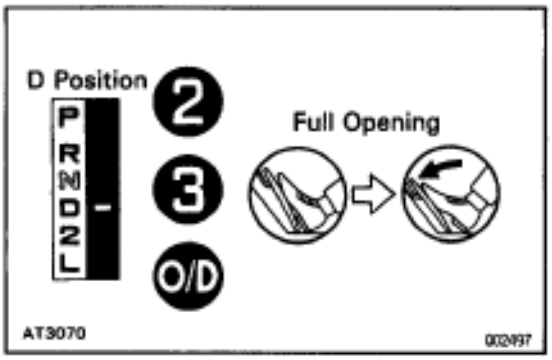

(d) Check kick–down operation.
While running in the D position, 2nd, 3rd and O/D gears, check to see that the possible kick–down vehicle speed limits for 3 → 2 and O/D → 3 kick–downs conform to those indicated on the automatic shift schedule.
(See page AT1–96)

(e) Check for abnormal shock slip at kick–down.

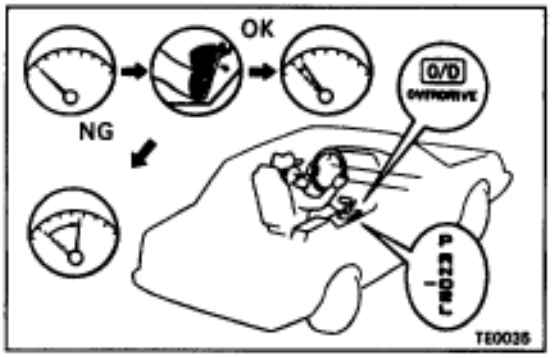

(f) Check the lock–up mechanism.
(1) Drive in D position, O/D gear, at a steady speed (lock–up ON) of about 172 km/h (107 mph).
(2) Lightly depress the accelerator pedal and check that the engine RPM does not change abruptly.
If there is big jump in the engine RPM there is no lock –up.

3. 2 POSITION TEST (NORM PATTERN)

Shift into the 2 position and, while driving with the accelerator pedal held constantly at the full throttle valve opening position, check on the following points:

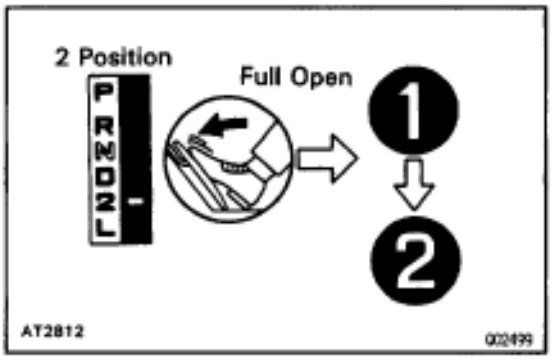

(a) Check up–shift operation.
Check to see that the 1 → 2 up–shift takes place and that the shift point conforms to the automatic shift schedule.
(See page AT1–96)
HINT: There is no O/D up–shift and lock–up in the 2 position.

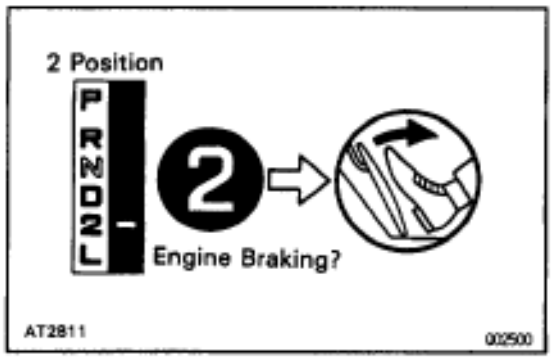

(b) Check engine braking.
While running in the 2 position and 2nd gear, release the accelerator pedal and check the engine braking effect.

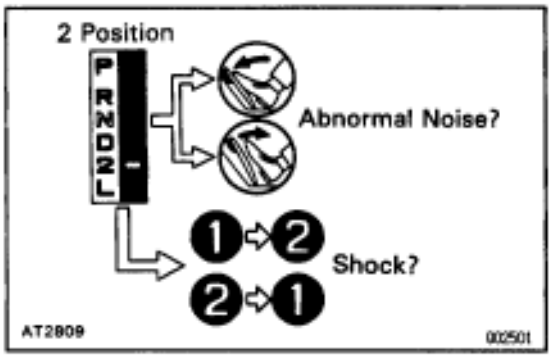

(c) Check for abnormal noise at acceleration and deceleration, and for shock at up–shift and down–shift.

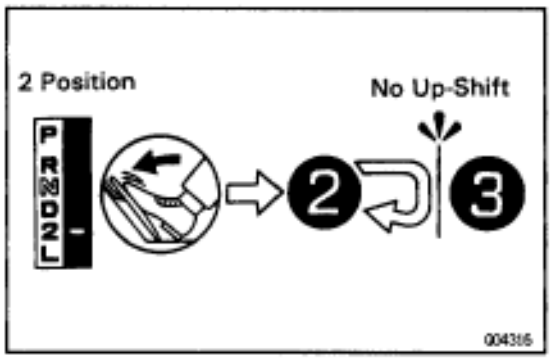

4. 2 POSITION TEST (MANU PATTERN)

Shift into the 2 position and while driving with the accelerator pedal held constantly at the full throttle valve opening position, push in one of the pattern selectors and check these points:

(a) Check no up–shift.

While running in the 2 position, check to see that there is no up–shift to 3rd gear.

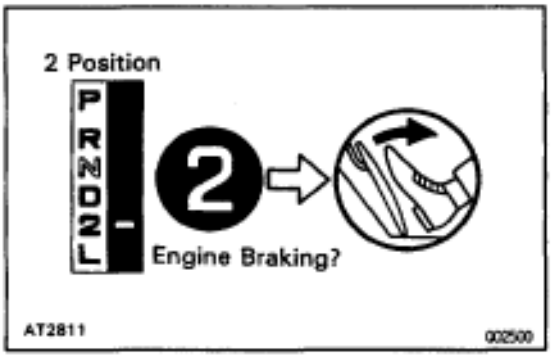

(b) Check engine braking.

While running in the 2 position and 2nd gear, release the accelerator pedal and check the engine braking effect.

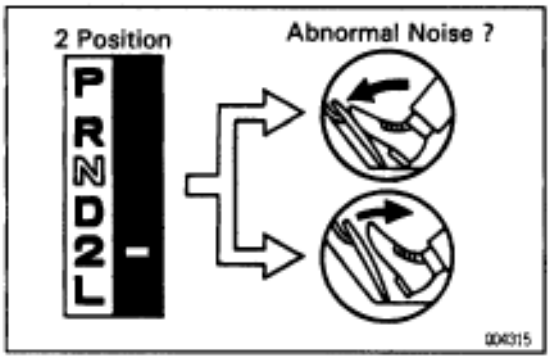

(c) Check for abnormal noise during acceleration and deceleration.

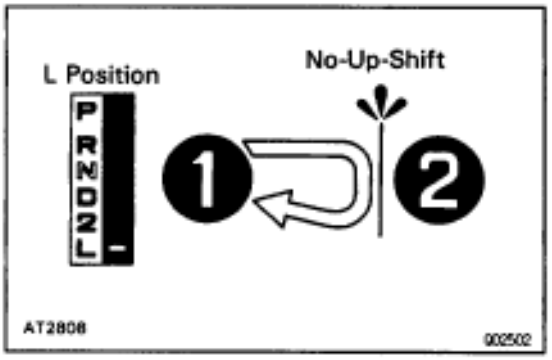

5. L POSITION TEST

Shift into the L position and while driving with the accelerator pedal held constantly at the full throttle valve opening position check the these points:

(a) Check no up–shift.

While running in the L position, check that there is no up–shift to 2nd gear.

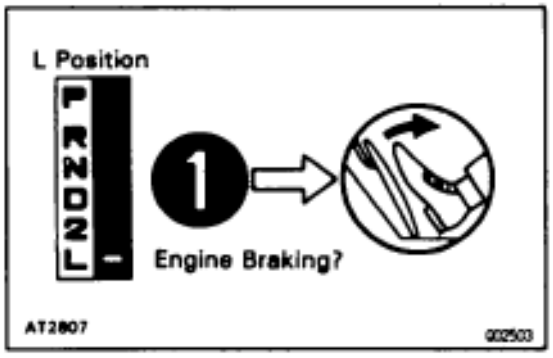

(b) Check engine braking.
While running in the L position, release the accelerator pedal and check the engine braking effect.

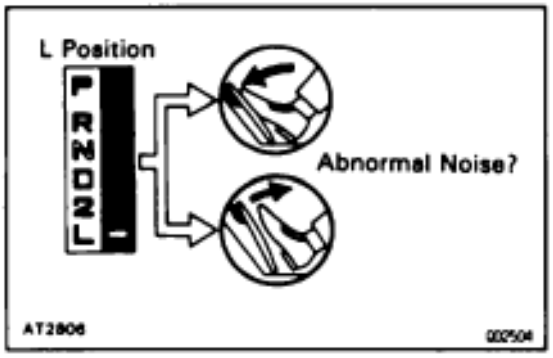

(c) Check for abnormal noise during acceleration and deceleration.

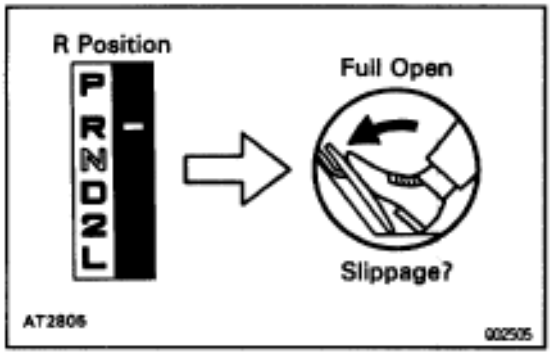

6. R POSITION TEST

Shift into the R position and while starting at full throttle, check for slipping.

CAUTION: Before conducting this test ensure that the test area is free from personnel and obstruction.

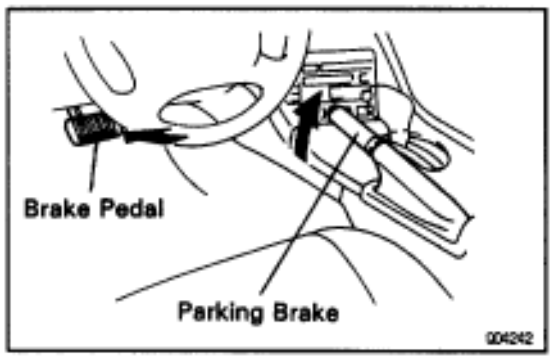

7. P POSITION TEST

Stop the vehicle on a gradient (more than 5°) and after shifting into the P position, release the parking brake.

Then check to see that the parking lock pawl holds the vehicle in place.

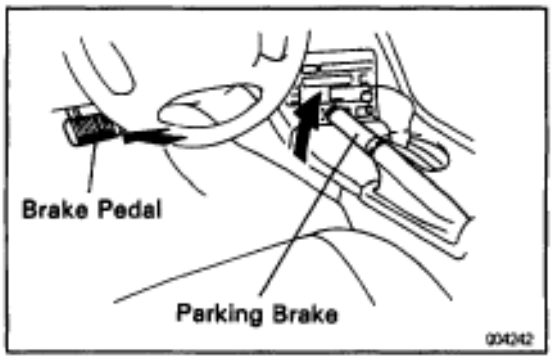

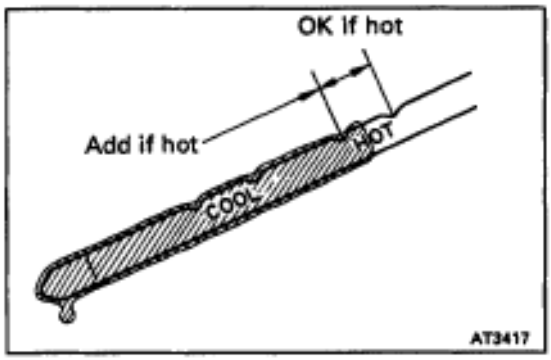

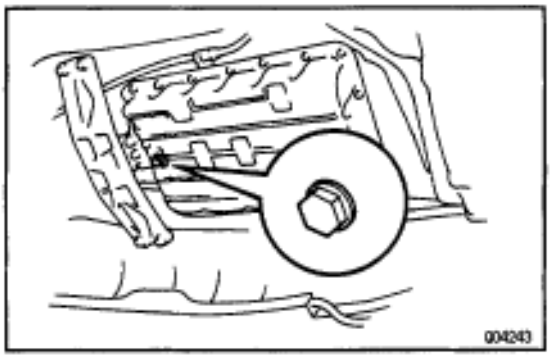

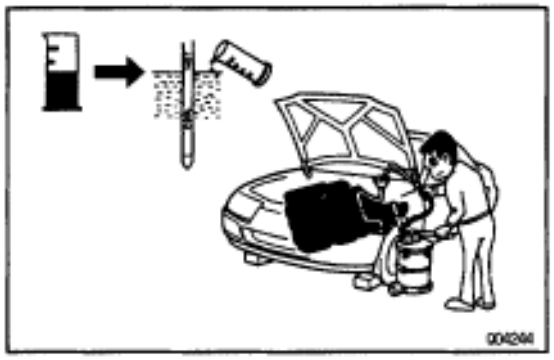

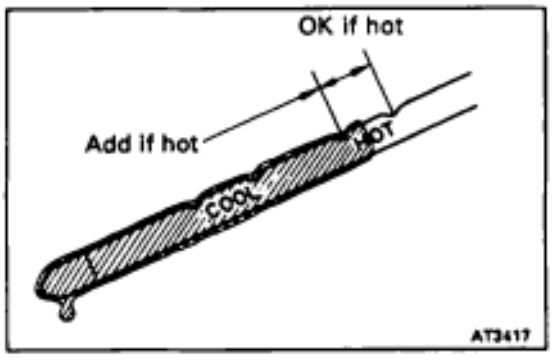

PRELIMINARY CHECK

1. CHECK FLUID LEVEL

HINT:

- Drive the vehicle so that the engine and transmission are at normal operating temp..
  Fluid temp. 70–80 ˚C (158–176 ˚F)
- Only use the COOL range on the dipstick as a rough reference when the fluid is replaced or the engine does not run.

(a) Park the vehicle on a level surface and set the parking brake.

(b) With the engine idling and the brake pedal depressed, shift the shift lever into all positions from P to L position and return to P position.

(c) Pull out the transmission dipstick and wipe it clean.

(d) Push it back fully into the pipe.

(e) Pull it out and check that the fluid level is in the HOT range. If the level is at the low side, add fluid.

Fluid type:

DEXRON® II

NOTICE: Do not overfill.

2. CHECK FLUID CONDITION

If the fluid smells burnt or is black, replace it.

3. REPLACE TRANSMISSION FLUID

(a) Remove the drain plug and drain the fluid.

(b) Reinstall the drain plug securely.

(c) With the engine OFF, add new fluid through the oil filler pipe.

Fluid type:

DEXRON® II

Capacity:

Dry fill: 7.2 liters (7.6 US qts, 6.3 Imp. qts)

Drain and refill: 1.6 liters (1.7 US qts, 1.4 Imp. qts)

(d) Start the engine and shift the shift lever into all positions from P to L position and then shift into P position.

(e) With the engine idling, check the fluid level. Add fluid up to the COOL level on the dipstick.

(f) Check the fluid level at the normal operating temperature 70–80 °C (158–176 °F) and add as necessary.

NOTICE: Do not overfill.

4. CHECK FLUID LEAKS

Check for leaks in the transmission.

If there are leaks, it is necessary to repair or replace O–rings, seal packings, oil seals, plugs or other parts.

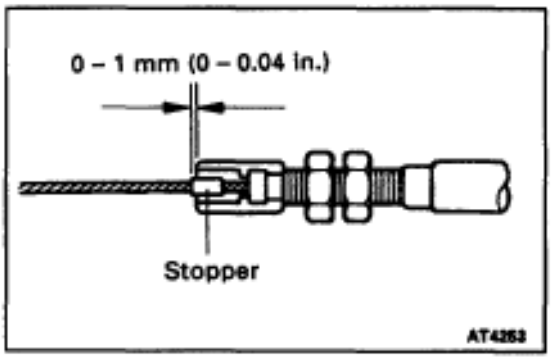

5. INSPECT AND ADJUST THROTTLE CABLE

(a) Check that the throttle valve is fully closed.

(b) Check that the inner cable is not slack.

(c) Measure the distance between the outer cable end and stopper on the cable.

Standard distance:

0–1 mm (0–0.04 in.)

If the distance is not standard, adjust the cable by the adjusting nuts.

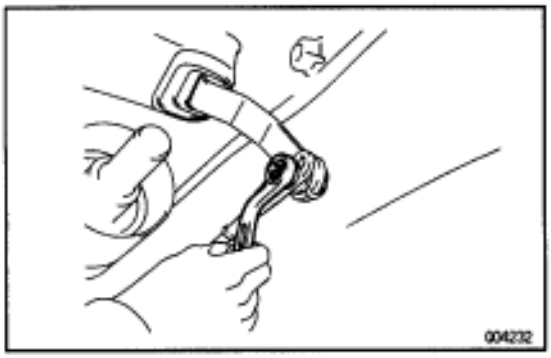

6. INSPECT AND ADJUST SHIFT LEVER POSITION

When shifting the shift lever from the N position to other positions, check that the lever can be shifted smoothly and accurately to each position and that the position indicator correctly indicates the position.

If the indicator is not aligned with the correct position, carry out the following adjustment procedures:

(a) Loosen the nut on the control shaft lever.

(b) Push the control shaft lever fully rearward.

(c) Return the control shaft lever 2 notches to N position.

(d) Set the shift lever to N position.

(e) While holding the shift lever lightly toward the R position side, tighten the shift lever nut.

(f) Start the engine and make sure that the vehicle moves forward when shifting the lever from the N to D position and reverses when shifting it to the R position.

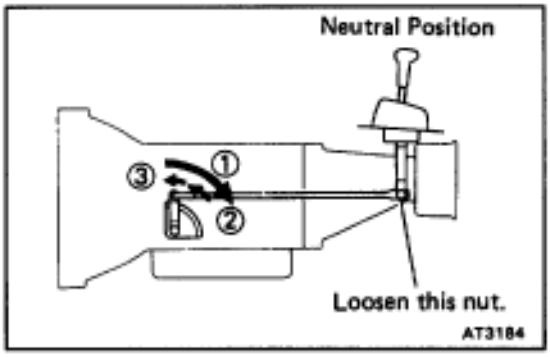

7. INSPECT AND ADJUST PARK/NEUTRAL POSITION SWITCH

Check that the engine can be started with the shift lever only in the N or P position, but not in other positions.

If not as started above, carry out these adjustment procedures:

(a) Loosen the park/neutral position switch bolt and set the shift lever to the N position.

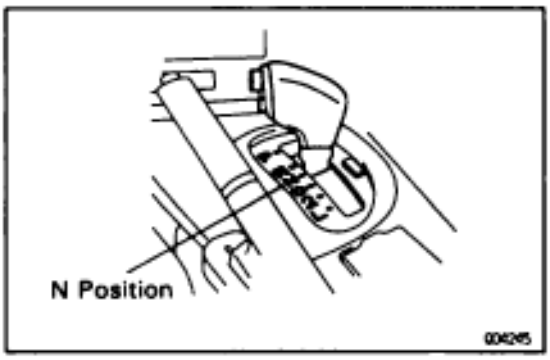

(b) Align the groove and neutral basic line.

(c) Hold in position and tighten the bolt.

Torque: 13 N·m (130 kgf·cm, 9 ft·lbf)

For continuity inspection of the park/neutral position switch, see page AT1–81.

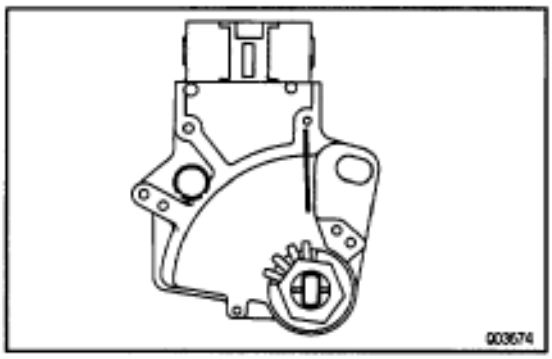

8. INSPECT IDLE SPEED

Idle speed:

700 ± 50 rpm

(In N position and air conditioner OFF)

MECHANICAL SYSTEM TEST

STALL TEST

The object of this test is to check the overall performance of the transmission and engine by measuring the stall speeds in the D and R positions.

NOTICE:

- **Do the test at normal operating fluid temp. 50–80 °C (122–176 °F).**
- **Do not continuously run this test longer than 5 seconds.**
- **To ensure safety, conduct this test in a wide, clear, level area which provides good traction.**
- **The stall test should always be carried out in pairs. One technician should observe the conditions of wheels or wheel stoppers outside the vehicle while the other is doing the test.**

MEASURE STALL SPEED

(a) Chock the 4 wheels.
(b) Connect a tachometer to the engine.
(c) Fully apply the parking brake.
(d) Keep your left foot pressed firmly on the brake pedal.
(e) Start the engine.
(f) Shift into the D position. Fully depress the accelerator pedal with your right foot. Quickly read the stall speed.

Stall speed:

2,450 ± 150 rpm

(g) Do the same test in R position.
Quickly read the stall speed.

Stall speed:

2,450 ± 150 rpm

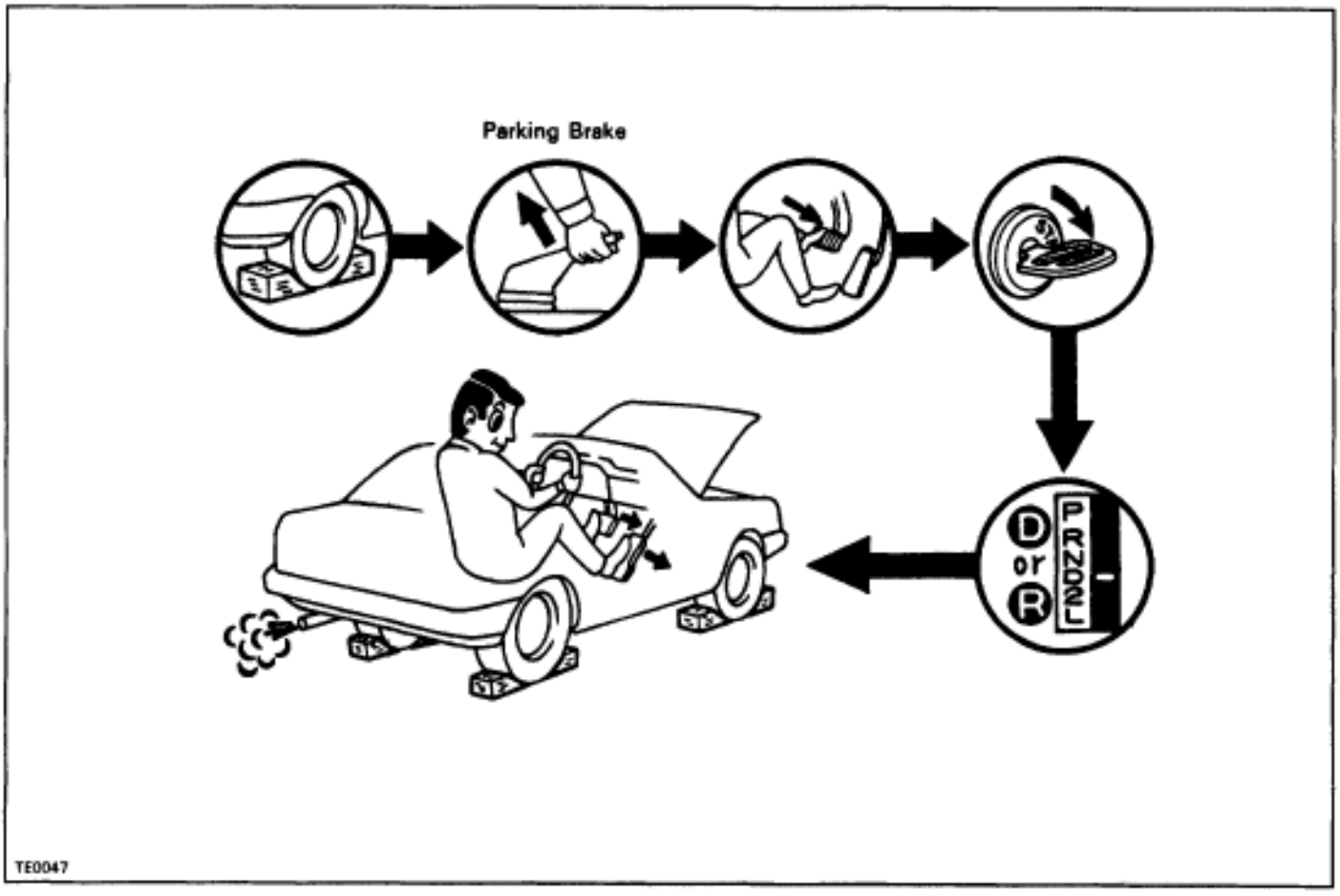

EVALUATION

Problem	Possible cause
(a) Stall speed low in D and R positions.	• Engine output may be insufficient. • Stator one–way clutch is operating properly HINT: If more than 600 rpm below the specified value, the torque converter clutch could be faulty.
(b) Stall speed high in D position.	• Line pressure too low • Forward clutch slipping • No.2 one–way clutch not operating properly • O/D one–way clutch not operating properly
(c) Stall speed high in R position.	• Line pressure too low • Direct clutch slipping • First and reverse brake slipping • O/D clutch one–way clutch not operating properly
(d) Stall speed high in D and R positions.	• Line pressure too low • Improper fluid level • O/D one–way clutch not operating properly

TIME LAG TEST

When the shift lever is shifted while the engine is idling, there will be a certain time lapse or lag before the shock can be felt. This is used for checking the condition of the O/D direct clutch, forward clutch, direct clutch, and first and reverse brake.

NOTICE:

- **Do the test at normal operating fluid temp. 50–80 °C (122–176 °F).**
- **Be sure to allow a one minute interval between tests.**
- **Take 3 measurements and take the average value.**

MEASURE TIME LAG

(a) Fully apply the parking brake

(b) Start the engine and check idle speed.

Idle speed:

700 ± 50 rpm (In N position and air conditioner OFF)

(c) Shift the shift lever from N to D position. Using a stop watch, measure the time it takes from shifting the lever until the shock is felt.

In same manner, measure the time lag for N → R.

Time lag:

N → D Less than 1.2 seconds

N → R Less than 1.5 seconds

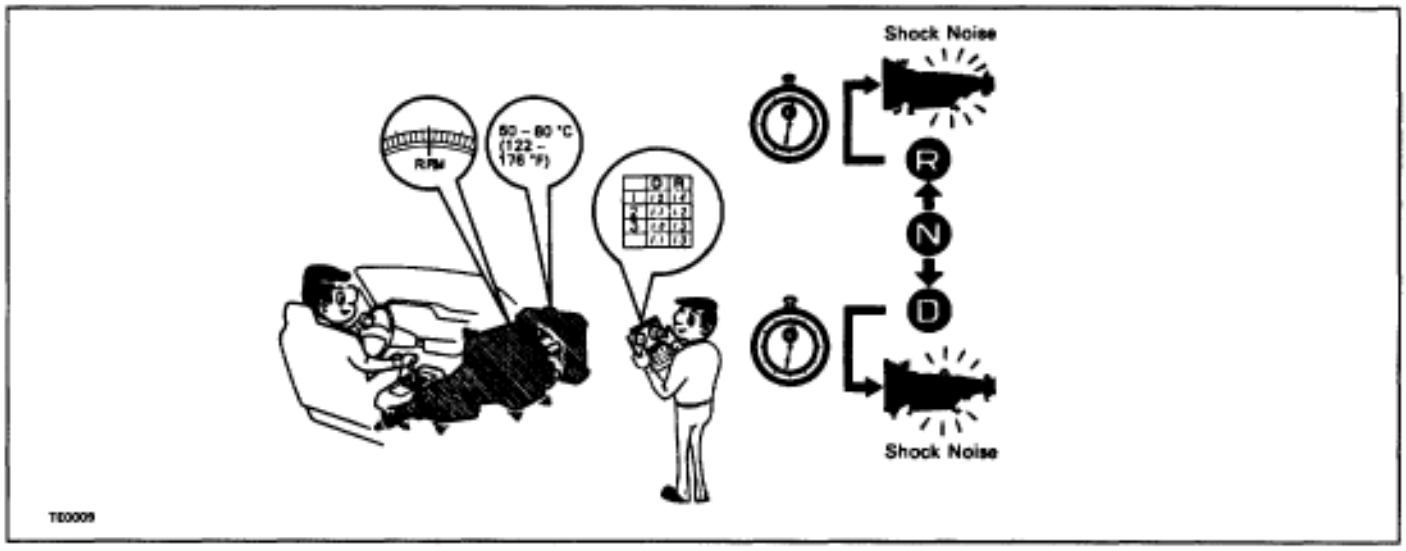

EVALUATION

If N → D or N → R time lag is longer than specified:

Problem	Possible cause
N→D time lag is longer	· Line pressure too low · Forward clutch worn · O/D one–way clutch not operating properly · Accumulator back pressure too low
N→R time lag is longer	· Line pressure too low · Direct clutch worn · First and reverse brake worn · O/D clutch one–way clutch not operating properly · Accumulator back pressure too low

HYDRAULIC TEST

MEASURE LINE PRESSURE

NOTICE:

- **Do the test at normal operating fluid temp. 50–80 °C (122–176 °F).**
- **The line pressure test should always be carried out in pairs. One technician should observe the conditions of wheels or wheel stoppers outside the vehicle while the other is doing the test.**
- **Be careful to prevent the oil pressure gauge hose from interfering with the exhaust pipe.**

(a) Warm up the transmission fluid.

(b) Remove the test plug on the transmission case left side and connect the oil pressure gauge (SST). SST 09992–00094 (Oil pressure gauge)

HINT: Connecting the oil pressure gauge will be made easier by moving LH side heat insulator aside.

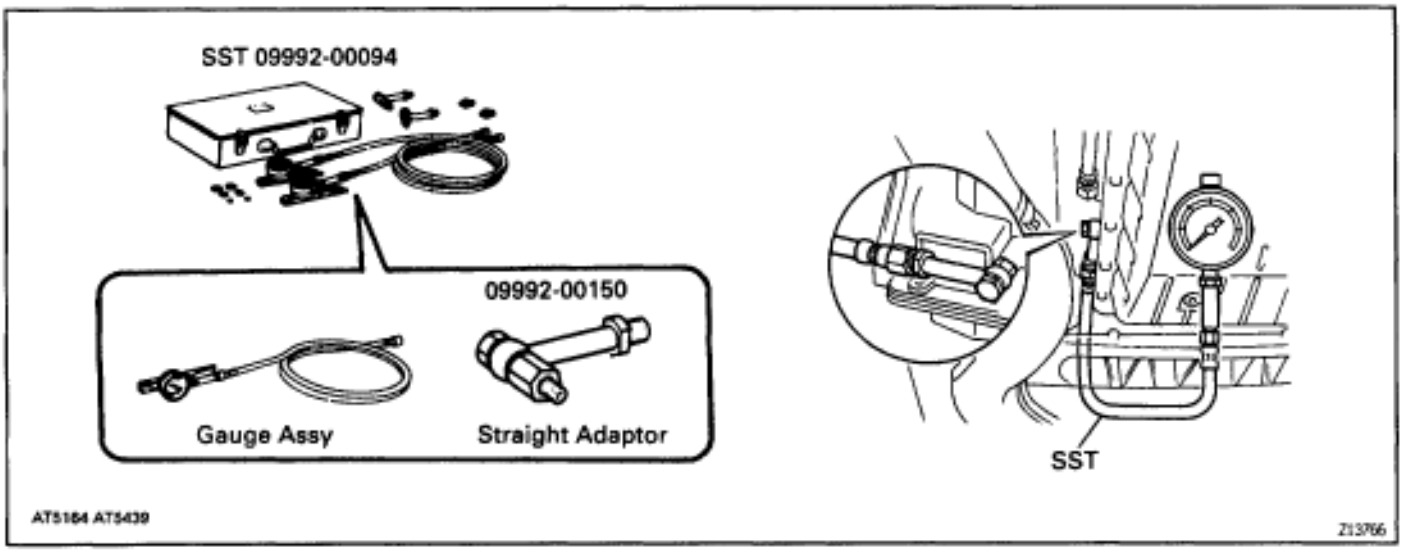

(c) Fully apply the parking brake and chock the 4 wheels.

(d) Start the engine and check idling RPM.

(e) Keep your left foot pressed firmly on the brake pedal and shift into D position.

(f) Measure the line pressure when the engine is idling.

(g) Press the accelerator pedal all the way down. Quickly read the highest line pressure when engine speed reaches stall speed.

(h) In the same manner, do the test in R position.

SPECIFIED LINE PRESSURE

Line pressure	D position kPa (kgf/cm^2,psi)	R position kPa (kgf/cm^2, psi)
Idling	363–422 (3.7–4.3, 53–61)	500–598 (5.1–6.1, 73–88)
Stall	902–1,147 (9.2–11.7, 131–166)	1,236–1,589 (12.6–16.2, 179–230)

If the measured pressures are not up to specified values, recheck the throttle cable adjustment and retest.

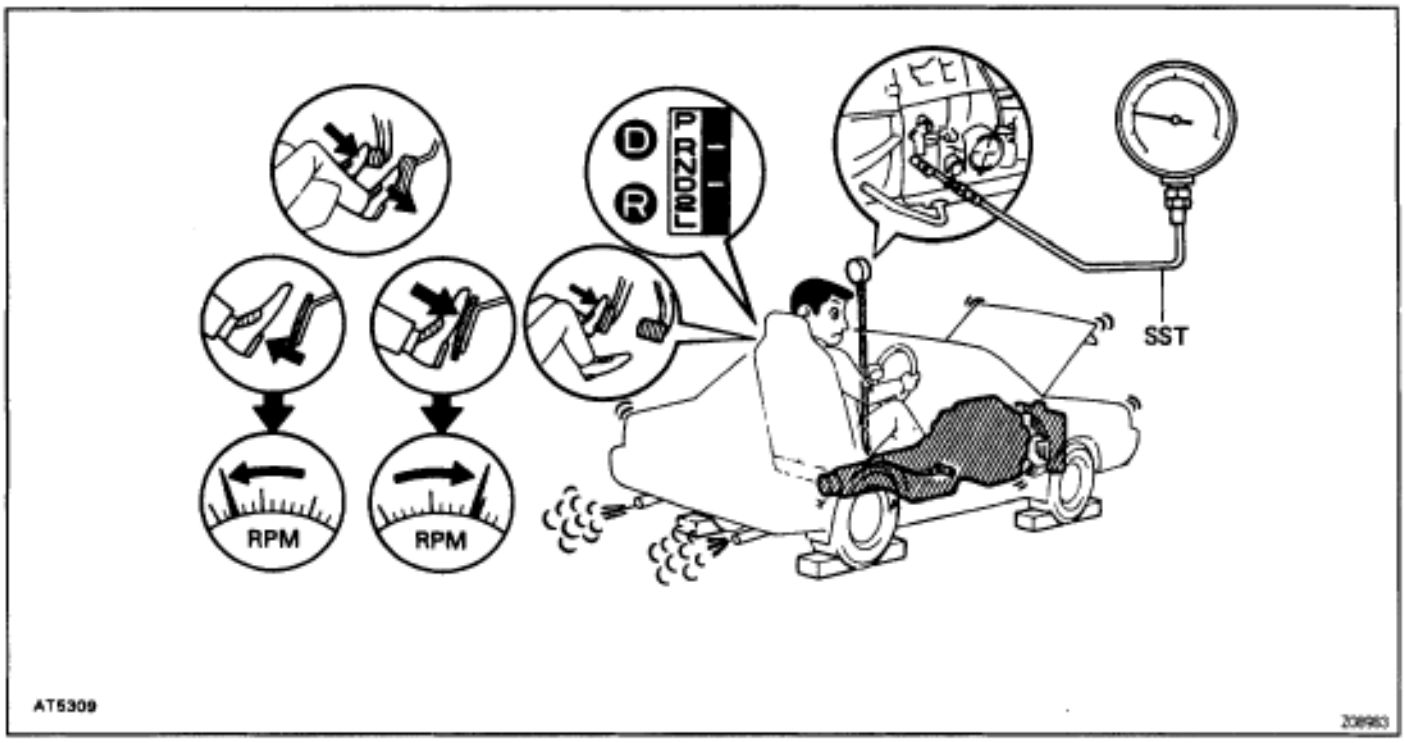

EVALUATION

Problem	Possible cause
If the measured values at all positions are higher.	· Throttle cable out of adjustment · Throttle valve defective · Regulator valve defective
If the measured values at all positions are lower.	· Throttle cable out of adjustment · Throttle valve defective · Regulator valve defective · Oil pump defective · O/D direct clutch defective
If pressure is low in the D position only.	· D position circuit fluid leakage · Forward clutch defective
If pressure is low in the R position only	· R position circuit fluid leakage · Direct clutch defective · First and reverse brake defective

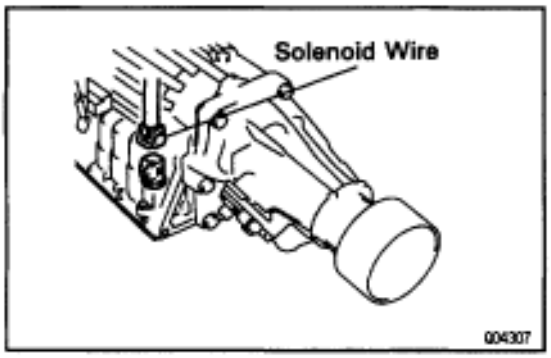

MANUAL SHIFTING TEST

HINT: With this test, it can be determined whether the trouble is within the electrical circuit or is a mechanical problem in the transmission.

1. DISCONNECT SOLENOID WIRE

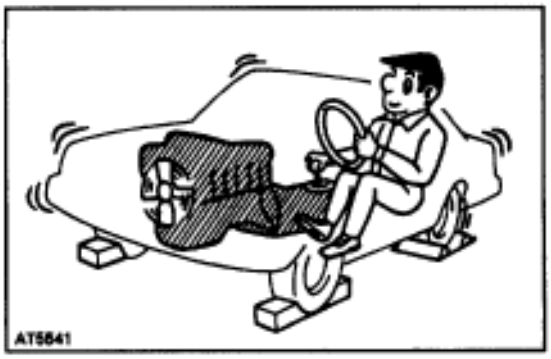

2. INSPECT MANUAL DRIVING OPERATION

Check that the shift and gear positions correspond with the table below.

Shift Position	Gear Position
D	O/D
2	3rd
L	1st
R	Reverse
P	Pawl Lock

HINT: If the L, 2 and D position gear positions are difficult to distinguish, do the following road test.

- While driving, shift through the L, 2 and D positions. Check that the gear change corresponds to the shift position.

If any abnormality is found in the above test, the problem is in the transmission itself.

3. CONNECT SOLENOID WIRE

4. CANCEL OUT DIAGNOSTIC TROUBLE CODE

(See page AT1–35**)**

–Memo–

DIAGNOSTIC TROUBLE CODE CHART

If a diagnostic trouble code is displayed during the diagnostic trouble code check, check the circuit listed for that code in the table below and proceed to the page given.

DTC No.	Blinking Pattern	Circuit	Diagnostic Trouble Code Detection Condition
38	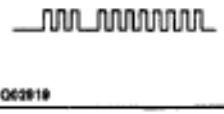	A/T fluid temp. sensor	Either (a) or (b) are detected for 0.5 sec. or more. (a) Temperature sensor resistance less than 79 Ω (b) After the engine has been operating for 15 minutes or more, the resistance at the temperature sensor is more than 156 kΩ
42	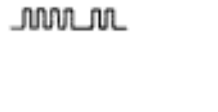	No. 1 vehicle speed sensor	All conditions below are detected 500 times or more continuously. (2 trip detection logic) *3 (a) No No. 1 vehicle speed sensor signal in 16 pulses of No. 2 vehicle speed sensor signal. (b) Vehicle speed: 9 km/h (5.6 mph) or more for 4 secs. or more. (c) Park/neutral position switch: OFF (Other than P or N position)
61		No. 2 vehicle speed sensor	All conditions below are detected 500 times or more continuously. (2 trip detection logic) *3 (a) No No. 2 vehicle speed sensor signal in 4 pulses of No. 1 vehicle speed sensor signal. (b) Vehicle speed: 9 km/h (5.6 mph) or more for 4 secs. or more. (c) Park/neutral position switch: OFF (Other than P or N position)
62		No. 1 solenoid valve	(1) Solenoid resistance of 8 Ω or less is detected (*) 8 times or more when No. 1 solenoid is energized. (2) Solenoid resistance of 100 kΩ or more is detected (*) 8 times or more when No. 1 solenoid is not energized. (*) If the above failures are detected less than 8 times, the ECM memorizes the malfunction code but the O/D OFF indicator light does not blink.
63	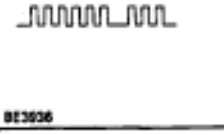	No. 2 solenoid valve	(1) Solenoid resistance of 8 Ω or less is detected (*) 8 times or more when No. 2 solenoid is energized. (2) Solenoid resistance of 100 kΩ or more is detected (*) 8 times or more when No. 2 solenoid is not energized. (*) If the above failures are detected less than 8 times, the ECM memorizes the malfunction code but the O/D OFF indicator light does not blink.
64	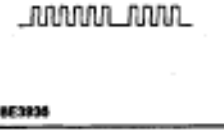	Lock–up solenoid valve	(a) Solenoid resistance is 8 Ω or lower (short circuit) when solenoid energized. (b) Solenoid resistance is 100 kΩ or higher (open circuit) when solenoid is not energized. (*) ECM memorizes diag. trouble code 64 if above (a) or (b) condition is detected once or more, but ECM does not start O/D OFF indicator light blinking.

Trouble Area	O/D OFF Light *1 Blinks	Memory *2	See Page
• Harness or connector between A/T fluid temp. senter and ECM. • A/T fluid temp. sensor. • ECM	○	○	AT1–64
• Harness or connector between No. 1 vehicle speed sensor and ECM. • No. 1 vehicle speed sensor. • Telltale light RH. • ECM	○	○	AT1–66
• Harness or connector between No. 2 vehicle speed sensor and ECM. • No. 2 vehicle speed sensor. • ECM	○	○	AT1–69
• Harness or connector between No. 1 solenoid and ECM. • No. 1 solenoid valve. • ECM	○	○	AT1–72
• Harness or connector between No. 2 solenoid and ECM. • No. 2 solenoid valve. • ECM	○	○	AT1–72
• Harness or connector between lock–up solenoid and ECM. • Lock–up solenoid valve. • ECM	×	○	AT1–75

*1 "○" mark means "O/D OFF" indicator light blinks once every 2 seconds.
"X" mark means "O/D OFF" indicator light never blinks.

*2 "○" marks means the ECM memorizes the malfunction code if the ECM detects the diagnostic trouble code detection condition.

*3 This indicates items for which "2 trip detection logic" is used. With this logic, when a logic malfunction is first detected, the malfunction is temporarily stored in the ECM memory. If the same case is detected again during the second drive test, this second detection causes the O/D OFF Indicator Light to blink. The 2 trip repeats the same mode twice. (However, the IG switch must be turned OFF between the 1st trip and 2nd trip.)

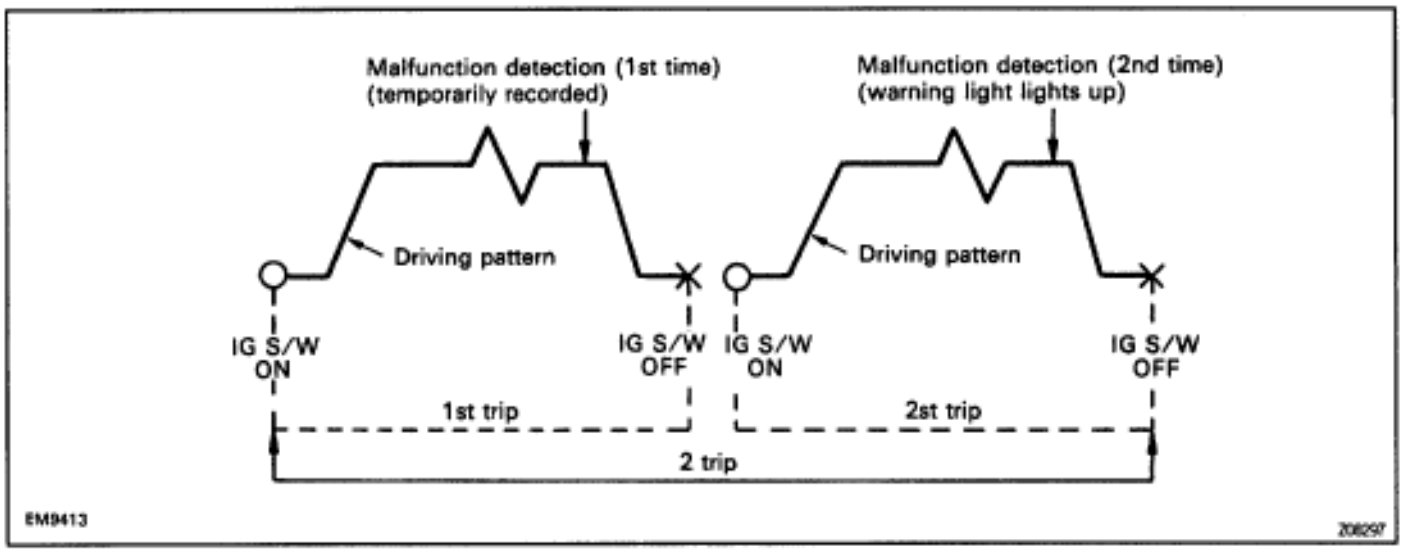

HINT:

- If the malfunction returns to normal while a malfunction warning is being output, the O/D OFF indicator light stops blinking and goes off.
  However, the diagnostic trouble code is retained in memory until it is cleared from memory.
- If the diagnosis system outputs a diagnostic trouble code even though the O/D OFF indicator was not blinking, there is intermittent trouble. Check all the connections in the circuits corresponding to that code.
- If the vehicle speed sensors No.1 and No.2 happen to fail simultaneously, the ECM will neither alert the driver by blinking the O/D OFF indicator nor record any diagnostic trouble code. It will, however, decide that the vehicle can be driven only in 1st and none of the other gears, so shifting upward will then be prohibited.
- Codes 46, 62, 63 and 64 are limited to short or open circuits in the electrical system comprised of the solenoids, wire harnesses, and connectors. The ECM is unable to detect mechanical trouble (sticking, for example) in the solenoid valves.

–Memo–

STANDARD VALUE OF ECM TERMINAL

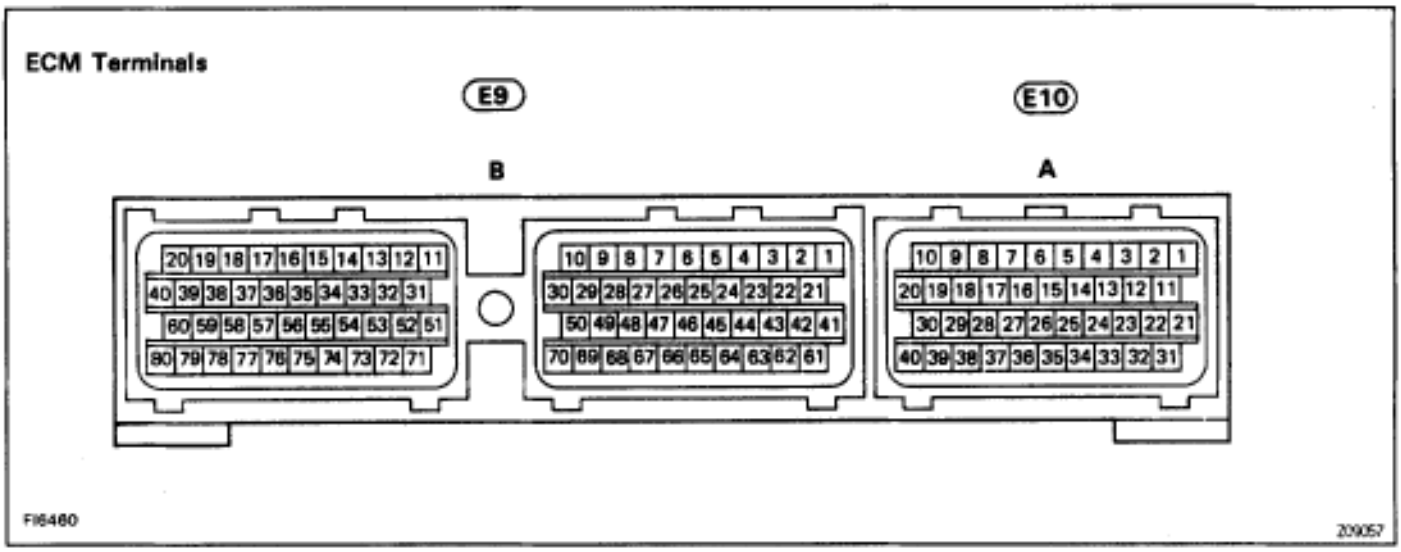

* A = (E10), B = (E9)

Terminals	Symbols	Wiring Color	Condition		Standard Value
B76 – B69	NSW – E1	B–W ↔ BR	IG ON	Shift Lever; P or N position	Below 3 V
				Shift Lever; Other than P or N position	9 – 14 V
B3 – B23	$SP2^-$ – $SP2^+$	G ↔ R	IG OFF		560 – 680 Ω
B10 – B69	S1 – E1	W–R ↔ BR	IG OFF		10 – 16 Ω
			Vehicle driving in 2nd gear position		9 – 14 Ω
			IG ON		9 – 14 Ω
B9 – B69	S2 – E1	RL ↔ BR	IG OFF		10 – 16 Ω
			Vehicle driving in 2nd or 3rd position		9 – 14 Ω
			IG ON		Below 1.5 V
B43 – B65	VTA1 – E2	Y ↔ BR–B	IG ON	Accel. pedal is not depressed	Below 0.8 V
				Accel. pedal is fully depressed	3.2 – 4.9 V
B64 – B65	IDL1 – E2	R ↔ BR–B	IG ON	Accel. pedal is not depressed	Below 3 V
				Accel. pedal is depressed	9 – 14 V
A2 – B65	SP1 – E2	P ↔ BR–B	Ignition switch ON Turn the rear wheel slowly		Repeat 0–8V or above
A3 – B69	KD – E1	Y ↔ BR	IG ON	Kick–down SW; OFF (Accel. pedal is not depressed)	9 – 14 V
				Kick–down SW; ON (Accel. pedal is fully depressed)	Below 3 V
A9 – B69	2 – E1	LG–R ↔ BR	IG ON	Shift Position; 2 position	7.5 – 14 V
				Shift Position; Other than 2 position	Below 1.5 V
A10 – B69	L – E1	G–B ↔ BR	IG ON	Shift Position; L position	7.5 – 14 V
				Shift Position; Other than L position	Below 1.5 V
A12 – B69	OD1 – E1	BR–B ↔ BR	Ignition switch ON		4.5 – 5.5 V
A18 – B69	M – E1	G–Y ↔ BR	IG ON	Pattern select SW: MANU	7.5 – 14 V
				Pattern select SW: NORM	Below 1.5 V
A28 – B69	OD2 – E1	V–G ↔ BR	IG ON	O/D main SW; ON	7.5 – 14 V
				O/D main SW; OFF	Below 3 V
B24 – B65	OIL – E2	BR–B ↔ O	A/T fluid temperature 110°C (230°F)		Below 1 V

MATRIX CHART OF PROBLEM SYMPTOMS

If a normal code is displayed during the diagnostic trouble code check but the trouble still occurs, check the circuits for each symptom in the order given in the charts on the following pages and proceed to the page given for troubleshooting.

The Matrix Chart is divided into 3 chapters.

Chapter 1: Electronic Circuit Matrix Chart

Chapter 2: On–vehicle Repair Matrix Chart

Chapter 3: Off–vehicle Repair Matrix Chart

When troubleshooting, check Chapter 1 first. If instructions are given in Chapter 1 to proceed to Chapter 2 or 3, proceed as instructed.

1. If the instruction ”Proceed to next circuit inspection shown on matrix chart” is given in the flow chart for each circuit, proceed to the circuit with the next highest number in the table to continue the check.
2. If the trouble still occurs even though there are no abnormalities in any of the other circuits, then check or replace the ECM.

Chapter 1. Electronic Circuit

See Page / Suspect Area / Symptom		AT1–66 No.1 Vehicle speed sensor circuit	AT1–69 No.2 Vehicle speed sensor circuit	AT1–72 No.1, No.2 Solenoid circuit	AT1–75 SL Solenoid circuit	AT1–77 Throttle position sensor circuit	AT1–81 Park/neutral position switch circuit	AT1–79 kick–down switch circuit
Vehicle does not move in any forward position and reverse position								
Vehicle does not move in particular position or positions								
No up–shift	1st → 2nd	3	4	1		2	6	
	2nd → 3rd	3	4	1		2	6	
	3rd → O/D	3	4	2		5	6	
No down–shift	O/D → 3rd	3	4	1		2		
	3rd → 2nd	3	4	1		2		
	2nd → 1st	3	4	1		2		
No lock–up		3	4		1	2	7	
No lock–up off		3	4		1	2		
Shift point too high or too low		3	4			1		
Up–shifts to 2nd while in L position Up–shifts to 3rd while in L position							1	
Up–shifts to O/D from 3rd while O/D switch is OFF								
Up–shifts to O/D from 3rd while engine is cold							3	
Harsh engagement	N → D				1	3	4	
	Lock–up	3	4		1	2		
	Any driving position	4	5		1	3		
Slip or Shudder	Forward and reverse							
	Any particular position							
No engine braking								
Poor acceleration		3	4		6	2		1
No kick–down		3		4		2		1
No pattern select*								
Large shift shock or engine stalls when starting off or stopping.					1			

* The automatic transmission is not shifted into the manual mode when the automatic transmission fluid temperature is too high.

AT1–83 Stop light switch circuit	AT1–85 Pattern select switch circuit	AT1–88 O/D switch O/D OFF indicator light circuit	AT1–91 O/D cancel signal circuit	AT1–64 A/T fluid temp. sensor circuit	EG–312 Engine coolant temp. switch circuit	AT1–56 ECM	AT1–60 On–Vehicle repair matrix chart	AT1–62 OFF–Vehicle repair matrix chart
							1	2
							1	2
						8	5	7
						8	5	7
		1	7		8	11	9	10
						6	5	—
						6	5	—
						7	5	6
5					8	11	9	10
5						8	6	7
	2					5	—	—
						2	—	—
		1				2	—	—
					1	4	2	3
				2		7	5	6
						7	5	6
				2		8	6	7
							1	2
							1	2
							1	2
						8	—	7
						6	5	—
	1					2	—	—
2						4	—	3

Chapter 2. On–Vehicle Repair

(★ : A340E, A340F, A340H AUTOMATIC TRANSMISSION Repair Manual Pub. No. RM391U)

See Page / Suspect Area / Symptom		AT1–43	AT1–43	★	★	★	★	★	★
		Throttle cable	Transmission control rod	Oil strainer	Parking lock pawl	Manual valve	Throttle valve	1–2 shift valve	2–3 shift valve
Vehicle does not move in any forward position and reverse position		1	2		5	3			
Vehicle does not move in particular position or positions									
Vehicle does not move in particular position or positions (except R position)									
No up–shift	1st → 2nd							1	
	2nd → 3rd								1
	3rd → O/D								
No down–shift	O/D → 3rd								
	3rd → 2nd								1
	2nd → 1st							1	
No lock–up or No lock–up off									
Harsh engagement	N → D								
	Lock–up								
	N → R								
	N → D								
	1st → 2nd (D position)								
	1st → 2nd (2 position)								
	2nd → 3rd → O/D								
	1st → 2nd → 3rd → O/D						1		
	2nd → 3rd								
	3rd → O/D								
	O/D → 3rd								
Slip or Shudder	Forward and Reverse	1	2	3					
	Particular position	1	2						
No engine braking	1st								
	2nd								
No kick–down								1	2

★	★	★	★	★	★	★	★	★	★	★	★	AT1–62
3–4 shift valve	Primary regulator valve	Lock–up relay valve	Accumulator control valve	Cut–back valve	C_2 accumulator	Low coast modulator valve	B_2 accumulator	2nd coast modulator valve	B_0 accumulator	C_0 accumulator	Pressure relief valve	OFF–Vehicle repair matrix chart
	4											6
												2
												1
												2
												2
1												2
1												
												2
		2										3
			1									5
		2										4
			1		2							4
						1						
			1				3					
			1					3				
				1								
			2									
			1		3							4
			1						3			4
			1							3		4
											4	5
												3
						1						2
								1				2

Chapter 3. Off–Vehicle Repair

(★ : A340E, A340F, A340H AUTOMATIC TRANSMISSION Repair Manual Pub. No. RM391U)

See Page / Suspect Area / Symptom		★	★	★	★	★	★
		O/D one–way clutch (F_O)	O/D brake (B_O)	O/D direct clutch (C_O)	O/D Planetary gear unit	Torque converter clutch (AT1–26)	1st reverse brake (B_3)
Vehicle does not move in any forward position and reverse position		1	2	3	4	5	
Vehicle does not move in R position				5			4
Vehicle does not move in:	D, 2 and L positions						
	D and 2 positions						
	2 position						1
	L position						
No up–shift	1st → 2nd						
	2nd → 3rd						
	3rd → O/D		1				
No down–shift	2nd → 1st						
No lock–up or No lock–up off						1	
Harsh engagement	N → D						
	N → R						2
	2nd → 3rd						
	3rd → O/D		2	1	3		
	O/D → 3rd		1				
	Lock–up					1	
Slip or Shudder	Forward & Reverse (After warm–up)	2		3		1	
	Forward & Reverse (Just after engine starts)					1	
	R position						2
	1st						
	2nd						
	3rd						
	O/D		1				
No engine braking	1st ~ 3rd			1			
	1st						1
	2nd						
Poor acceleration	All position					1	
	O/D			1	2		
	Other than O/D		1				
	Other than 2nd						
	1st and 2nd						
	1st and R position						1
	R position						
Engine stalls when starting off or stopping						1	

*	*	*	*	*	*	*
2nd coast brake (B_1)	Direct clutch (C_2)	Front and rear planetary gear unit	Forward clutch (C_1)	No.2 one–way clutch (F_2)	2nd brake (B_2)	No.1 one–way clutch (F_1)
1	3	2				
			1			
				1		
2	3				1	
					1	2
	1					
1					2	
			1			
	1					
1						
	1					
			1	2		
2					1	3
	1					
1						
1					2	
	1					
			1			

CIRCUIT INSPECTION

DTC 38 A T Fluid Temperature Sensor Circuit

CIRCUIT DESCRIPTION

The fluid temp. sensor converts fluid temp. into resistance values which is input into the ECM.

DTC No.	Diagnostic Trouble Code Detection Condition	Trouble Area
38	Either (a) or (b) are detected for 0.5 sec. or more (a) Temp. sensor resistance less than 79 Ω (b) After the engine has been operating for 15 minutes or more, the resistance at the temp. sensor is more than 156 kΩ	• Harness or connector between A/T fluid temp. sensor and ECM • A/T fluid temp. sensor • ECM

WIRING DIAGRAM

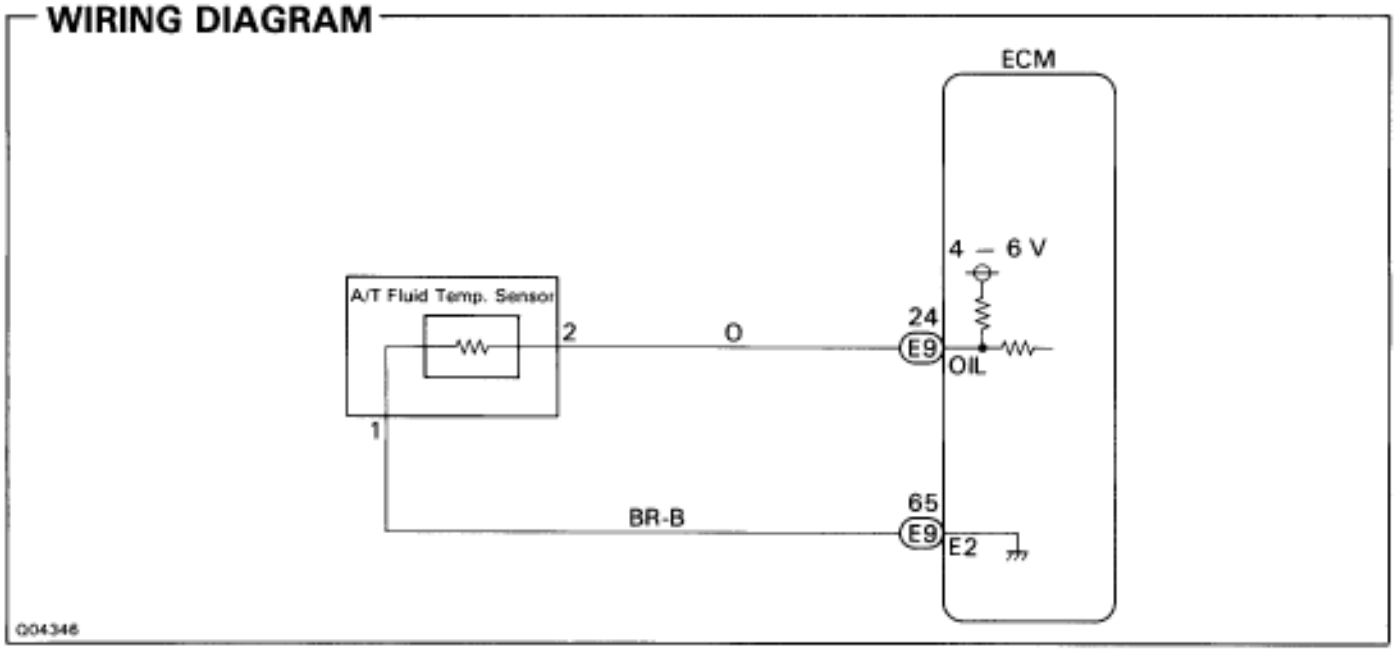

INSPECTION PROCEDURE

1 **Check A/T fluid temp. sensor.**

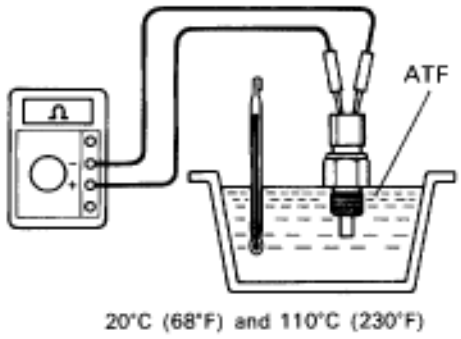

Check sensor resistance

P Remove A/T fluid temp. sensor.

C Measure resistance between terminals of A/T fluid temp. sensor at 20˚C (68˚F) and 110˚C (230˚F).

OK Resistance:
20˚C (68˚F) Approx. 12.08 kΩ
110˚C (230˚F) Approx. 0.78 kΩ

OK

NG → Replace A/T fluid temp. sensor.

2 **Check harness and connector between battery and A/T fluid temp. sensor A/T fluid temp. sensor and ECM. (See page IN–30).**

OK

NG → Repair or replace harness or connector.

Check and replace ECM.

DTC 42 No. 1 Vehicle Speed Sensor Signal Circuit

CIRCUIT DESCRIPTION

The No. 1 vehicle speed sensor outputs a 4–pulse signal for every revolution of the rotor shaft, which is rotated by the transmission output shaft via the driven gear. After this signal is converted into a more precise rectangular waveform by the waveform shaping circuit inside the combination meter, it is then transmitted to the ECM. The ECM determines the vehicle speed based on the frequency of these pulse signals.

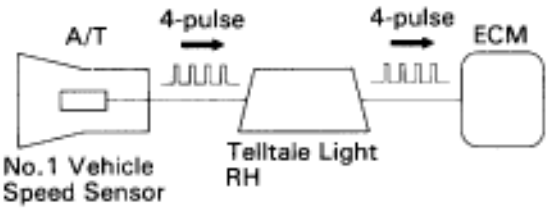

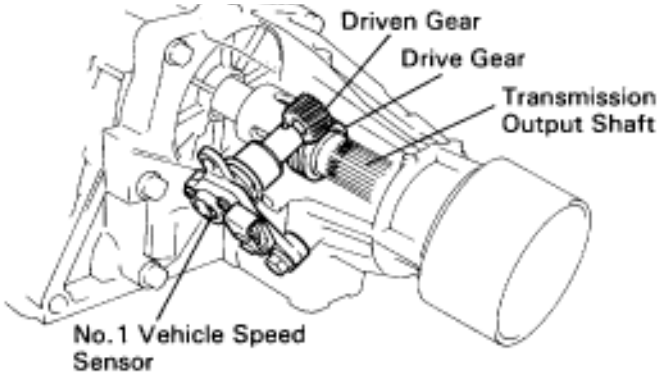

FI6643 FI6644

DTC No.	Diagnostic Trouble Code Detection Condition	Trouble Area
42	All conditions below are detected 500 times or more continuously. (2 trip detection logic)* (a) No. No. 1 vehicle speed sensor signal in 16 pulses of No. 2 vehicle speed sensor signal. (b) Vehicle speed: 9 km/h (5.6 mph) or more for 4 secs. or more for 4 secs. or more. (c) Park/neutral position switch: OFF (Other than P or N position)	• No. 1 vehicle speed sensor • Telltale light RH • Harness or connector between No. 1 vehicle speed sensor and ECM • ECM

*: See page AT1–54

HINT: In test more, diagnostic trouble code 42 is output when vehicle speed is 5 km/h (3 mph) or below.

< Reference >

- Waveform between terminals SP1 and E2 when vehicle speed is approx. 20 km/h (12 mph).

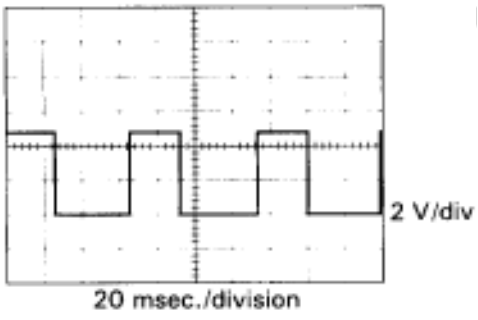

V01496

HINT: As the vehicle's speed increases, the signal output from SP1 increases.

WIRING DIAGRAM

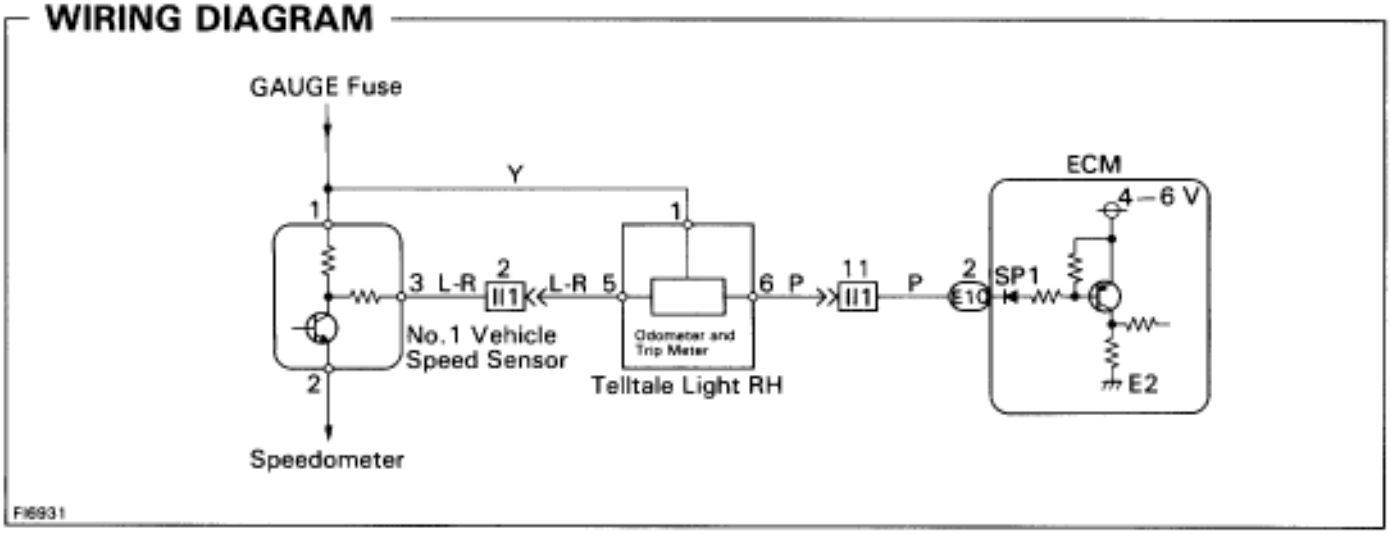

INSPECTION PROCEDURE

1 **Check voltage between terminal SP1 of ECM connector and body ground.**

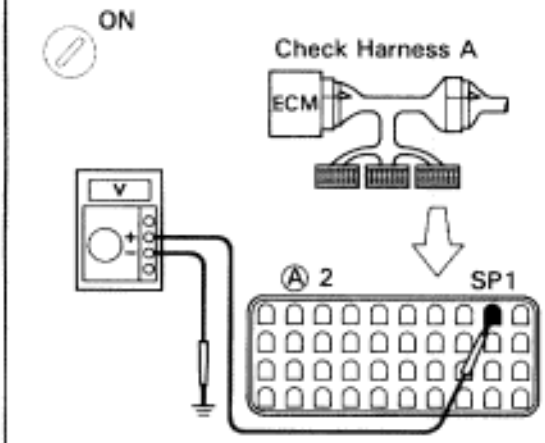

P
(1) Shift the shift lever to N position.
(2) Jack up one of the rear wheels.
(3) Connect the Check Harness A (See page EG–404)
(4) Disconnect power steering ECU connector and cruise control ECU connector.
(5) Turn ignition switch ON.

C Measure voltage between terminal SP1 of ECM connector and body ground when the wheel is turned slowly.

OK Voltage is generated intermittently.

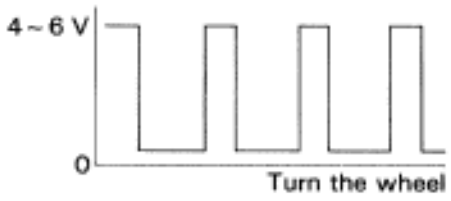

NG

OK Check and replace ECM.

2 **Check operation of odometer and trip meter (telltale light RH (See page BR–48))**

NG

OK Repair or replace harness or connector between ECM and telltale light RH.

3 **Check operation of No. 1 vehicle speed sensor (See page BR–46).**

NG

Replace No. 1 vehicle speed sensor.

OK

Repair or replace harness or connector between tell-tale light RH and No. 1 vehicle speed sensor.

DTC 61 No. 2 Vehicle Speed Sensor Circuit

CIRCUIT DESCRIPTION

The No. 2 vehicle speed sensor detects the rotation speed of the transmission output shaft and sends signals to the ECM. The ECM determines the vehicle speed based on these signals. An AC voltage is generated in the No.2 vehicle speed sensor coil as the rotor mounted on the output shaft rotates, and this voltage is sent to the ECM.
The gear shift point and lock–up timing are controlled by the ECM based on the signals from this vehicle speed sensor and the throttle position sensor signal.
If the No.2 vehicle speed sensor malfunctions, the ECM uses input signals from the No.1 vehicle speed sensor as a back–up signal.

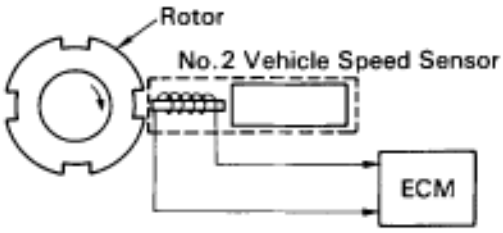

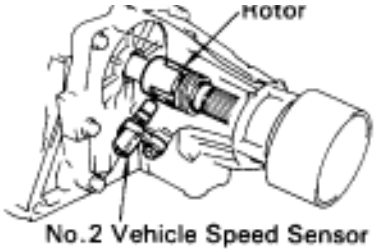

Q04436 Q04437

DTC No.	Diagnostic Trouble Code Detection Condition	Trouble Area
61	All conditions below are detected 500 times or more continuously. (2 trip detection logic)* (a) No. No. 2 vehicle speed sensor signal in 4 pulses of No. 2 vehicle speed sensor signal. (b) Vehicle speed: 9 km/h (5.6 mph) or more for 4 secs. or more for 4 secs. or more. (c) Park/neutral position switch: OFF (Other than P or N position)	• No. 2 vehicle speed sensor • Harness or connector between No. 2 vehicle speed sensor and ECM • ECM

*: See page AT1–54

< Reference >

- Waveform between terminals SP2– and SP2– when vehicle speed is approx. 60 km/h (37 mph).

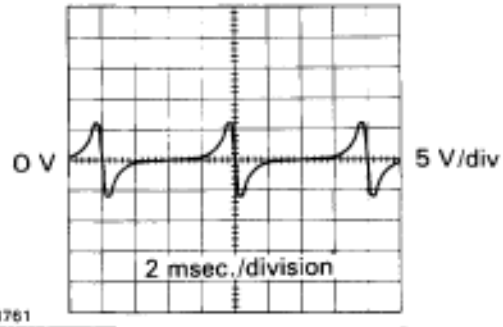

AT8761

WIRING DIAGRAM

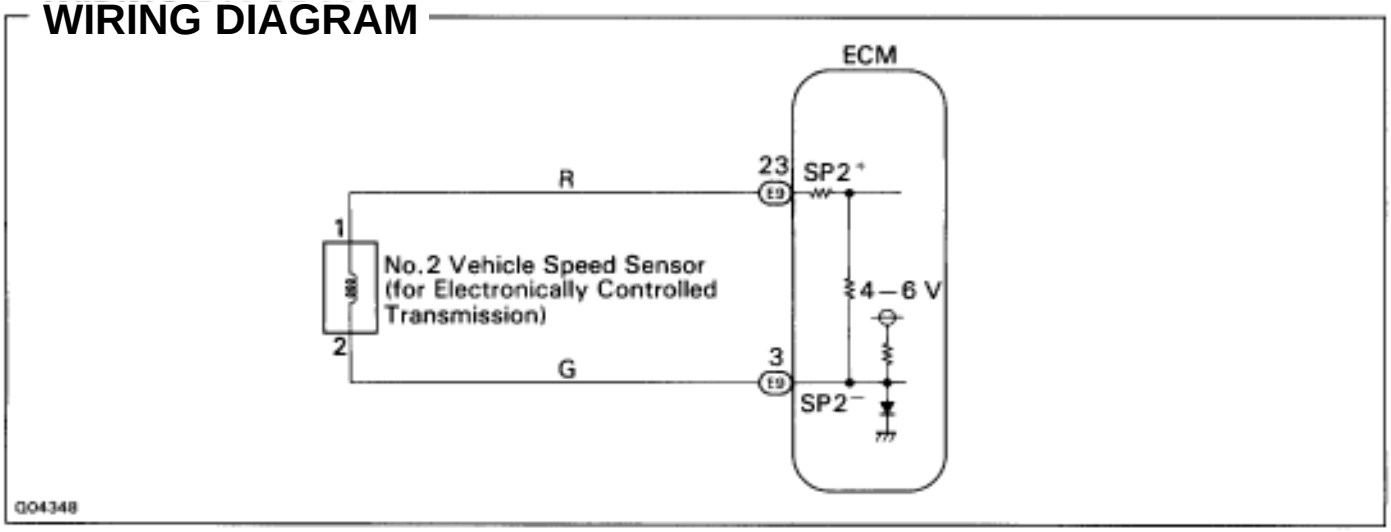

INSPECTION PROCEDURE

1 **Check resistance between terminals SP2+ and SP2− of ECM connector.**

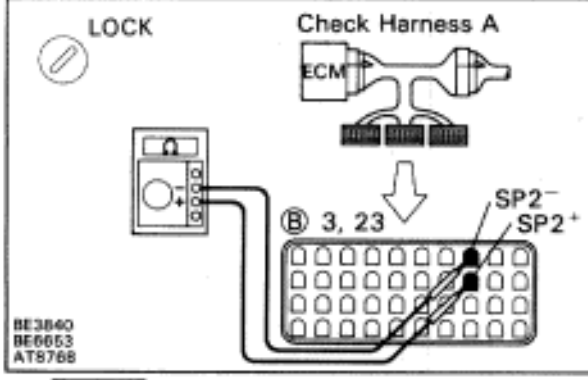

P Connect the Check Harness A to the ECM (See page EG–404).

C Check resistance between terminals SP2+ and SP2− of ECM connector.

OK Resistance: 560 – 680 Ω

NG

Go to **2** .

OK

Proceed to next circuit inspection shown on matrix chart (See page AT1–58).

2 **Check No. 2 vehicle speed sensor.**

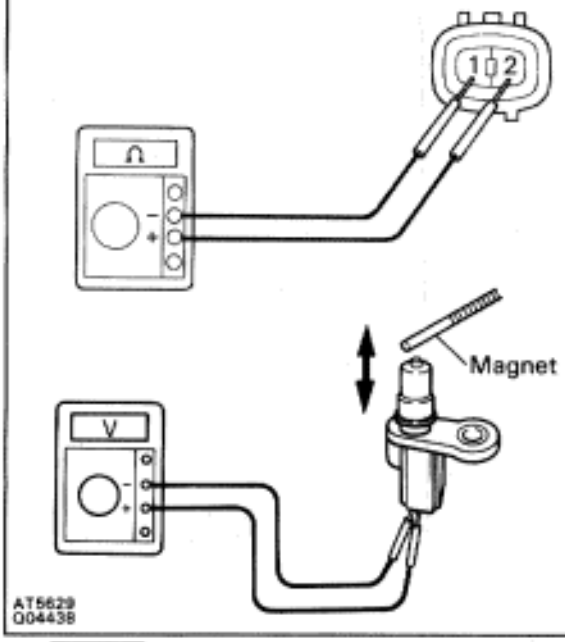

P Remove No. 2 vehicle speed sensor from transmission (See page AT1–14).

C Measure resistance between terminals 1 and 2 of No. 2 vehicle speed sensor.

OK Resistance: 560 – 680 Ω

<Reference>

Check the vehicle speed sensor's function

C Check voltage between terminals 1 and 2 of the speed sensor when a magnet is put close to the front end of the vehicle speed sensor then taken away quickly.

OK Voltage is generated intermittently.

Hint The voltages generated is extremely low.

OK

NG Replace No. 2 vehicle speed sensor.

Check and repair harness and connector between ECM and No. 2 vehicle speed sensor (See page IN–30).

DTC 62 63 No.1 No. 2 Solenoid Valve Circuit

CIRCUIT DESCRIPTION

Shifting from 1st to O/D is done in combination with ON and OFF of the No.1 and No.2 solenoid valves controlled by ECM. If an open or short circuit occurs in either of the solenoid valves, the ECM controls the remaining normal solenoid to allow the vehicle to be operated smoothly (Fail safe function).

Fail Safe Function

If either of the solenoid valve circuits develops a short or an open, the ECM turns the other solenoid ON and OFF to shift to the gear positions shown in the table below. The ECM also turns the lock–up solenoid valve OFF at the same time. If both solenoids malfunction, hydraulic control cannot be performed electronically and must be done manually.

Manual shifting as shown in the following table must be done (In the case of a short circuit, the ECM stops sending current to the short circuited solenoid).

Position	NORMAL			NO.1 SOLENOID MALFUNCTIONING			NO.2 SOLENOID MALFUNCTIONING			BOTH SOLENOIDS MALFUNCTIONING
	Solenoid valve		Gear	Solenoid valve		Gear	Solenoid valve		Gear	Gear when shift selector is manually operated
	No.1	No.2		No.1	No.2		No.1	No.2		
D	ON	OFF	1st	X	ON	3rd	ON	X	1st	O/D
	ON	ON	2nd	X	ON	3rd	OFF	X	O/D	O/D
	OFF	ON	3rd	X	ON	3rd	OFF	X	O/D	O/D
	OFF	OFF	O/D	X	OFF	O/D	OFF	X	O/D	O/D
2	ON	OFF	1st	X	ON	3rd	ON	X	1st	3rd
	ON	ON	2nd	X	ON	3rd	OFF	X	3rd	3rd
	OFF	ON	3rd	X	ON	3rd	OFF	X	3rd	3rd
L	ON	OFF	1st	X	OFF	1st	ON	X	1st	1st
	ON	ON	2nd	X	ON	2nd	ON	X	1st	1st

X: Malfunctions

Check the No.1 solenoid when diagnostic trouble code 62 is output and check and No.2 solenoid when diagnostic trouble code 63 is output.

DTC No.	Diagnostic Trouble Code Detection Condition	Trouble Area
62, 63	(a) Solenoid resistance is 8 Ω or lower (short circuit) when solenoid is energized. (b) Solenoid resistance is 100 kΩ or higher (open circuit) when solenoid is not energized. The ECM checks for an open or short circuit in the No.1 and No.2 solenoid circuit when it changes gear position. The ECM records diag. trouble code 62 or 63 if condition (a) or (b) is detected once, but it does not blink the O/D OFF indicator light. After the ECM detects the condition (a) or (b) continuously 8 times or more in one–trip *, it causes the O/D OFF indicator light to blink until condition (a) or (b) disappears. After that, if the ECM detects condition (a) or (b) one, it starts blinking the O/D OFF indicator light again.	• Solenoid valve • Harness or connector between solenoid and • ECM • ECM

* one–trip (1st trip) See page AT1–54

WIRING DIAGRAM

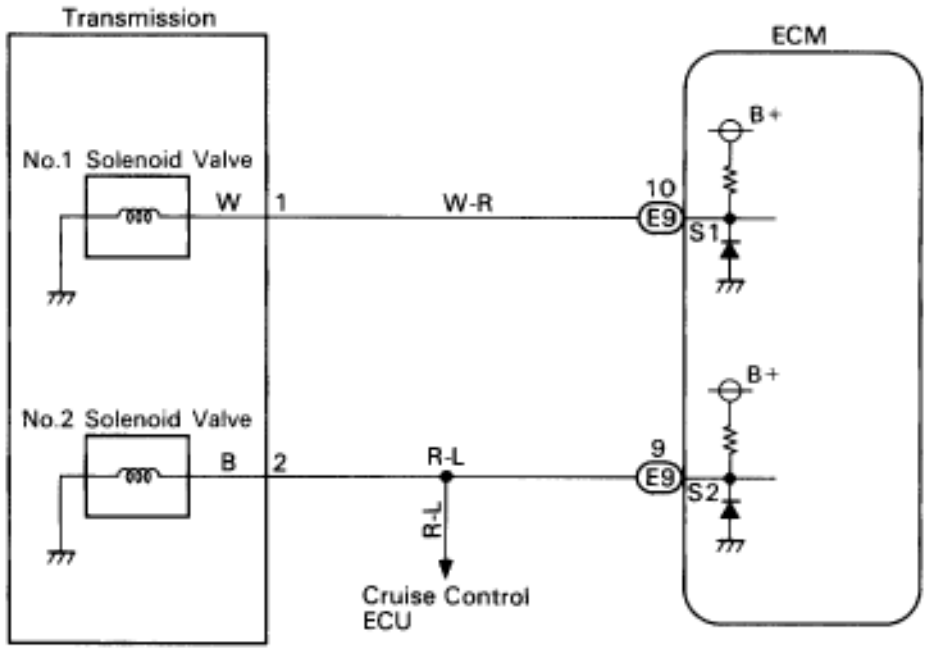

INSPECTION PROCEDURE

1 Check No. 1, No. 2 solenoid valves.

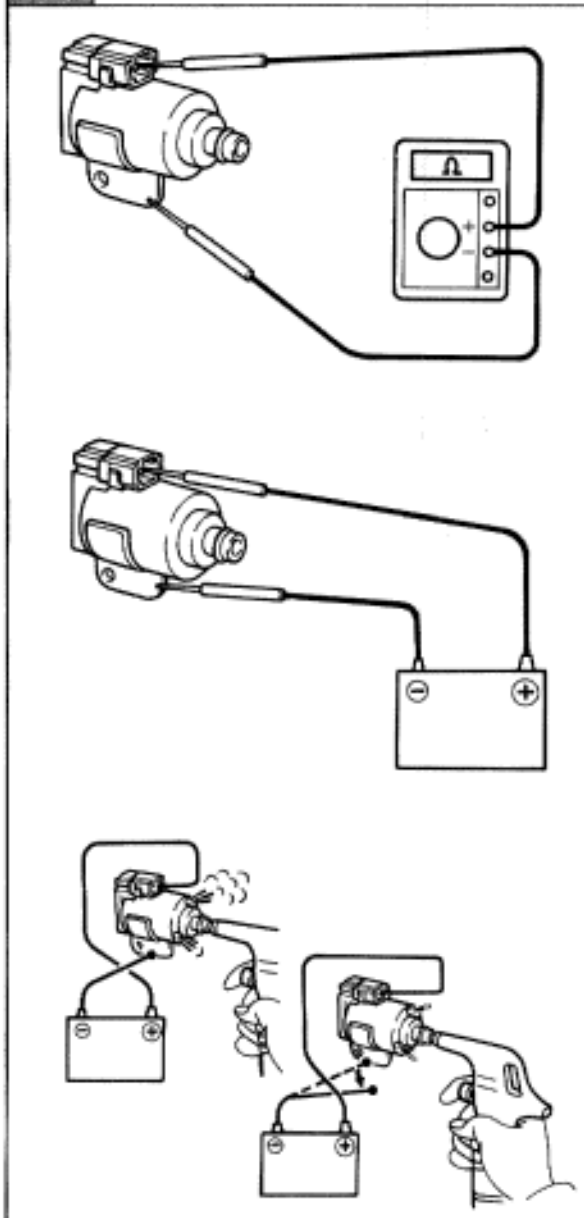

Electrical Check

P
1. Jack up the vehicle.
2. Remove the oil pan.
3. Disconnect the solenoid connector.

C Measure resistance between solenoid connector and solenoid body.

OK Resistance: 10 – 16 Ω

C Connect positive (+) lead to terminal of solenoid connector, negative (–) lead to solenoid body.

OK The solenoid makes an operating noise.

Mechanical Check

P
1. Remove the oil pan.
2. Remove the No. 1 and No. 2 solenoid valves.

C
1. Applying 490 kPa (5 kgf/cm^2, 71 psi) of compressed air, check that the solenoid valves do not leak air.
2. When battery positive voltage is supplied to the solenoid valves, check that the solenoid valves open.

OK

NG Replace solenoid valve.

2 Check harness and connector between ECM and solenoid (See page IN–30).

OK

NG Repair or replace harness or connector.

Proceed to next circuit inspection shown on matrix chart (See page AT1–58). However, when diagnostic trouble code 62 or 63 is displayed, check and replace ECM.

DTC 64 Lock–up Solenoid valve Circuit

CIRCUIT DESCRIPTION

The SL solenoid valve is turned ON and OFF by signals from the ECM to control the hydraulic pressure acting on the lock–up relay valve, which then controls operation of the lock–up clutch.
If a malfunction occurs in this circuit and diagnostic trouble code 64 is stored in memory, the O/D OFF indicator light does not blink.
Fail Safe Function
If the ECM detects a malfunction, it turns the lock–up solenoid valve OFF.

DTC No.	Diagnostic Trouble Code Detection Condition	Trouble Area
64	(a) Solenoid resistance is 8 Ω or lower (short circuit) when solenoid energized. (b) Solenoid resistance is 100 kΩ or higher (open circuit) when solenoid is not energized. ECM memorizes diag. trouble code 64 if about (a) or (b) condition is detected once or more, but ECM does not start O/D OFF indicator light blinking.	· Lock–up solenoid valve · Harness or connector between lock–up solenoid valve and ECM · ECM

WIRING DIAGRAM

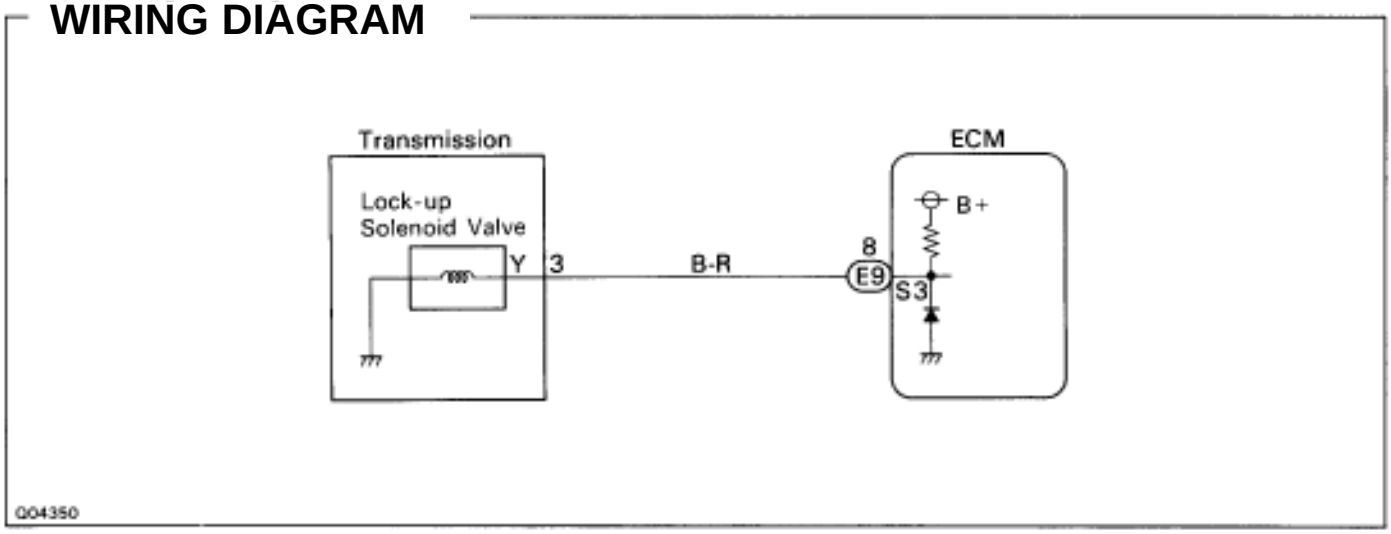

1 Check lock–up solenoid valve.

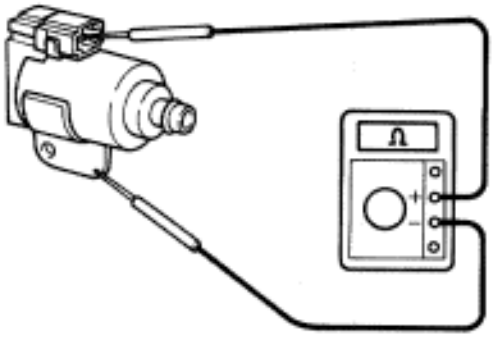

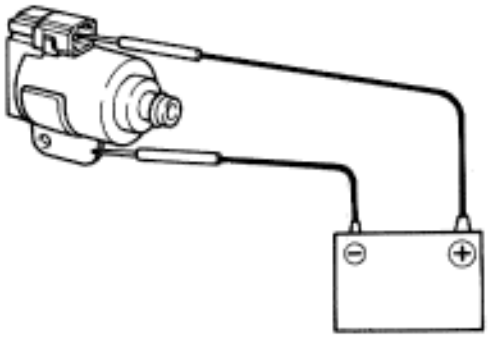

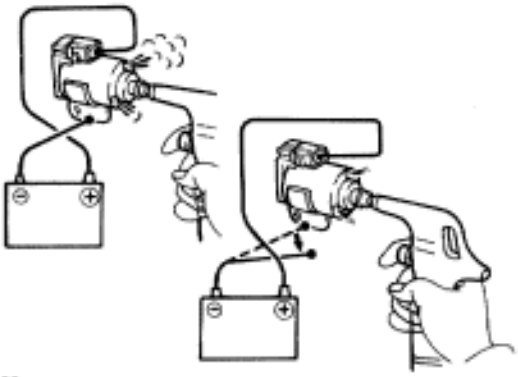

Q04439
Q04440
Q04441

Electrical Check

P
1. Jack up the vehicle.
2. Remove the oil pan.
3. Disconnect the lock–up solenoid valve connector.

C Measure resistance between lock–up solenoid connector and solenoid body.

OK Resistance: 10 – 16 Ω

C Connect lock–up solenoid valve operation noise when battery positive voltage is applied to the solenoid connector terminal and solenoid body.

OK The lock–up solenoid valve makes operation noise.

Mechanical Check

P Remove lock–up solenoid valve from valve body.

C
1. Applying 490 kPa (5 kgf/cm^2, 71 psi) of compressed air, check that the solenoid valve does not leak air.
2. When battery positive voltage is supplied to the solenoid valve, check that the solenoid valve opens.

OK

NG Replace lock–up solenoid valve.

2 Check harness and connector between lock–up solenoid valve and ECM (See page IN–30).

OK

NG Repair or replace harness or connector.

Proceed to next circuit inspection shown on matrix chart (See page AT1–58). However, when diagnostic trouble code 64 is displayed, check and replace ECM.

Throttle Position Sensor Circuit

CIRCUIT DESCRIPTION

The throttle position sensor detects the throttle valve opening angle and sends signals to ECM.

WIRING DIAGRAM

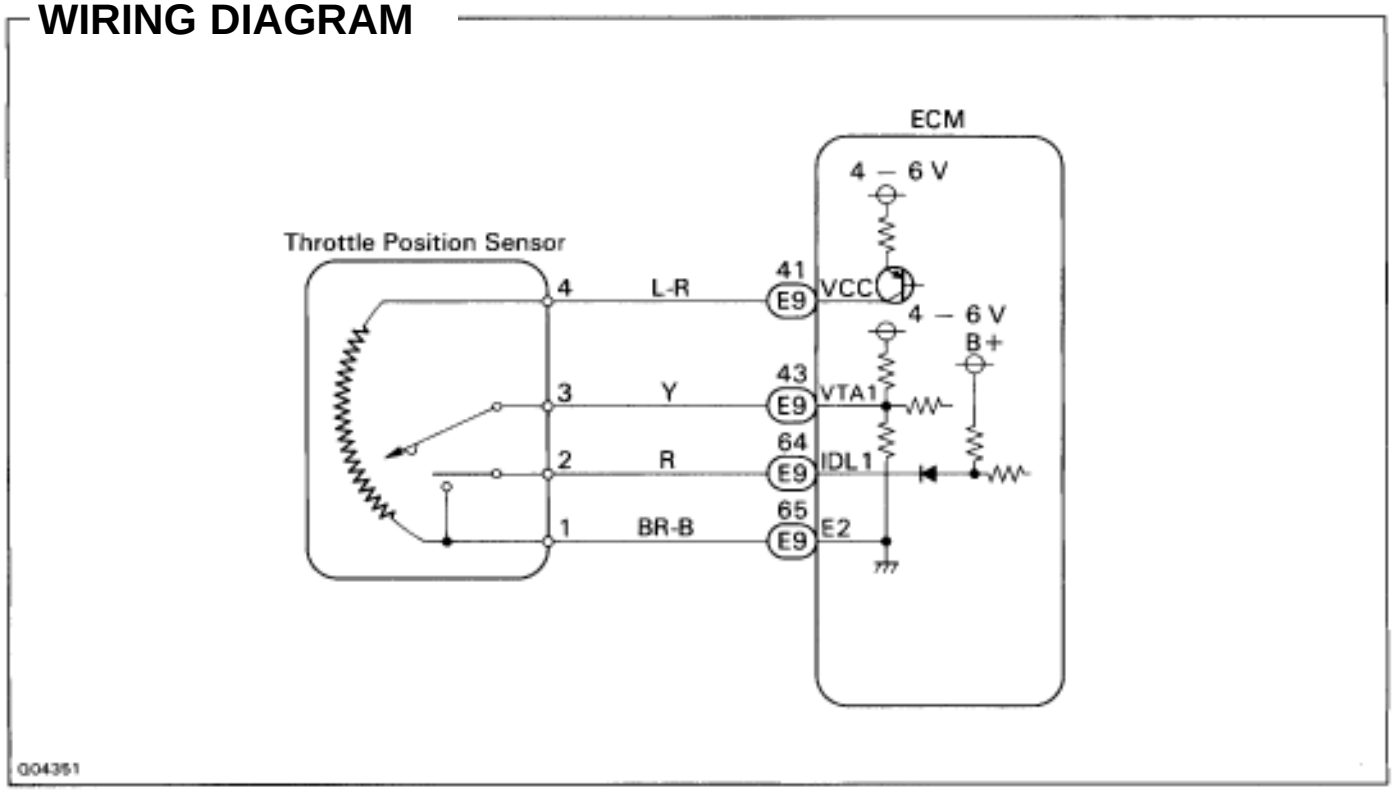

INSPECTION PROCEDURE

1 **Check throttle position signal.**

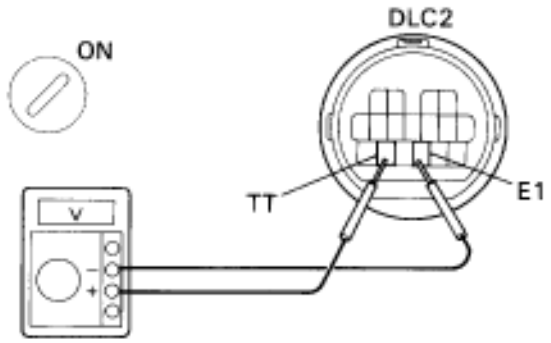

P Turn ignition switch ON.

C Check voltage at the terminal TT of the DLC2 while gradually depressing the accelerator pedal from the fully closed position to the fully opened position.

OK Voltage changes from 0 V to 8 V by stages.

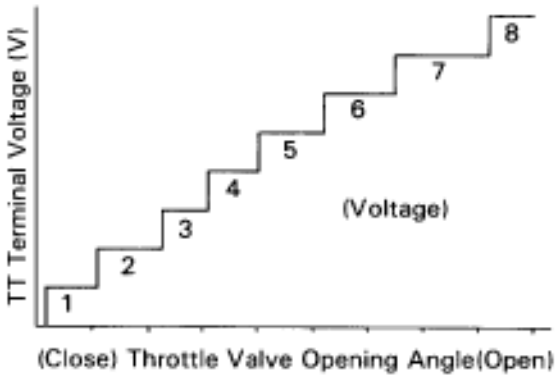

Hint Do not depress the brake pedal during this test. The voltage will stay at 0 V if depressed.

NG

OK → Proceed to next circuit inspection shown on matrix chart (See page AT1–58).

2 **Check throttle position sensor** (See page EG–219).

OK

NG → Replace throttle position sensor.

3 **Check harness and connector between ECM and throttle position sensor (See page IN–30).**

OK

NG → Repair or replace harness or connector.

Check and replace ECM.

Kick–down Switch Circuit

CIRCUIT DESCRIPTION

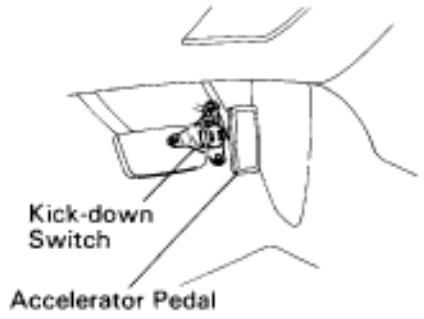

Q04246

The kick–down switch is turned on when the accelerator pedal is depressed beyond the full throttle opening and sends signals to ECM.
When the kick–down switch is turned on, the ECM controls gear shifting according to the programmed shift diagrams.
If a short circuit develops in the kick–down switch, the ECM disregards the kick–down signals and controls shifting at the normal shift points.

WIRING DIAGRAM

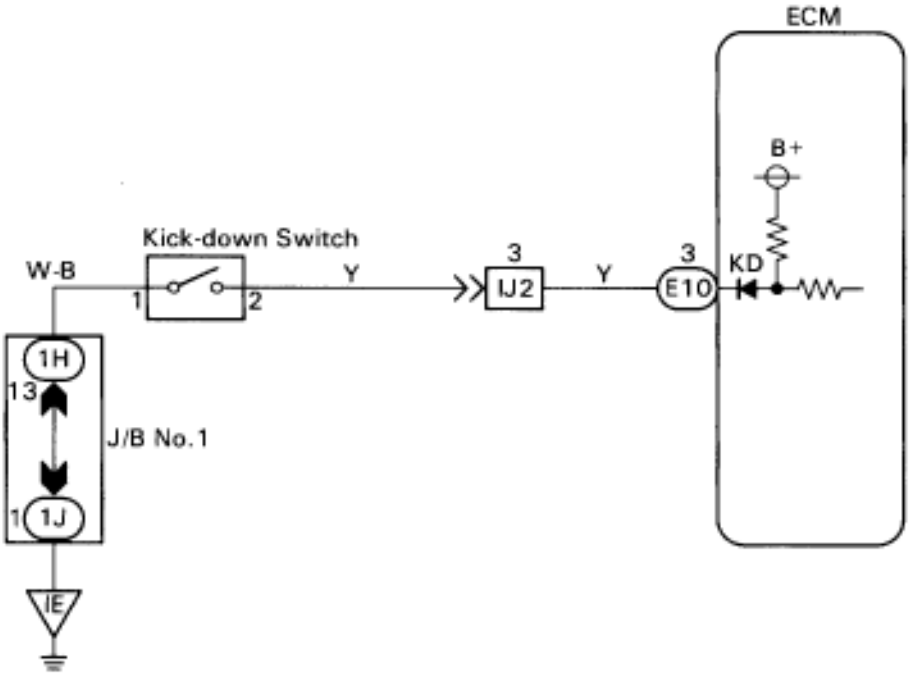

Q04321

INSPECTION PROCEDURE

1 Check voltage between terminal KD of ECM connector and body ground.

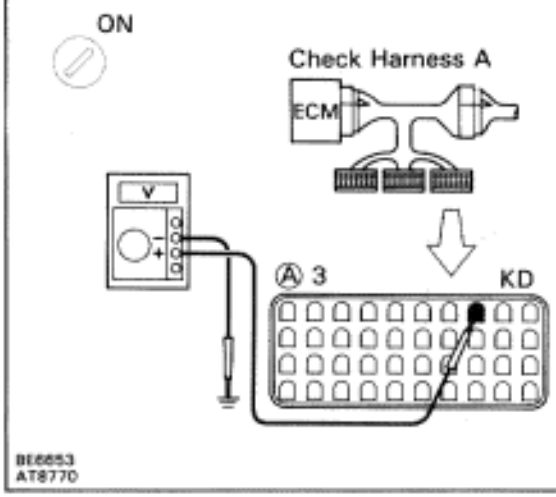

P
1. Connect the Check Harness A to the ECM (See page EG–404).
2. Turn ignition switch ON.

C
Measure voltage between terminal KD of ECM connector and body ground when accel. pedal is fully depressed or not.

OK

Accel. pedal	Voltage
Fully depressed (Kick–down SW is ON)	Below 3 V
Released (Kick–down SW is OFF)	9 – 14 V

NG

OK → Proceed to next circuit inspection shown on matrix chart (See page AT1–58).

2 Check kick–down switch.

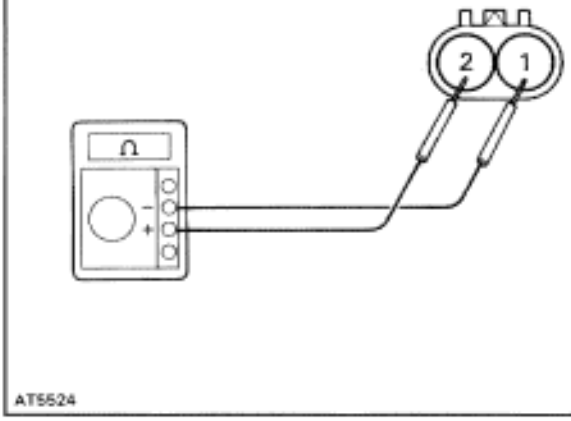

C
1. Disconnect kick–down switch connector (See page AT1–15).
2. Measure voltage between terminals 1 and 2 of kick–down switch connector when kick–down switch is on and off.

OK

Kick–down switch	Resistance
ON	C Ω (continuity)
OFF	∞ Ω (open)

OK

NG → Replace kick–down switch.

3 Check harness and connector between ECM and kick–down switch, kick–down switch and body ground (See page IN–30).

OK

NG → Repair or replace harness connector.

Check and replace ECM.

Park Neutral Position Switch Circuit

CIRCUIT DESCRIPTION

The park/neutral position switch detects the shift lever position and sends signals to ECM.
The ECM receives signals (NSW, 2 and L) from the park/neutral position switch. When the signal is not sent to the ECM from the park/neutral position switch, the ECM judges that the shift lever is in the D position.

WIRING DIAGRAM

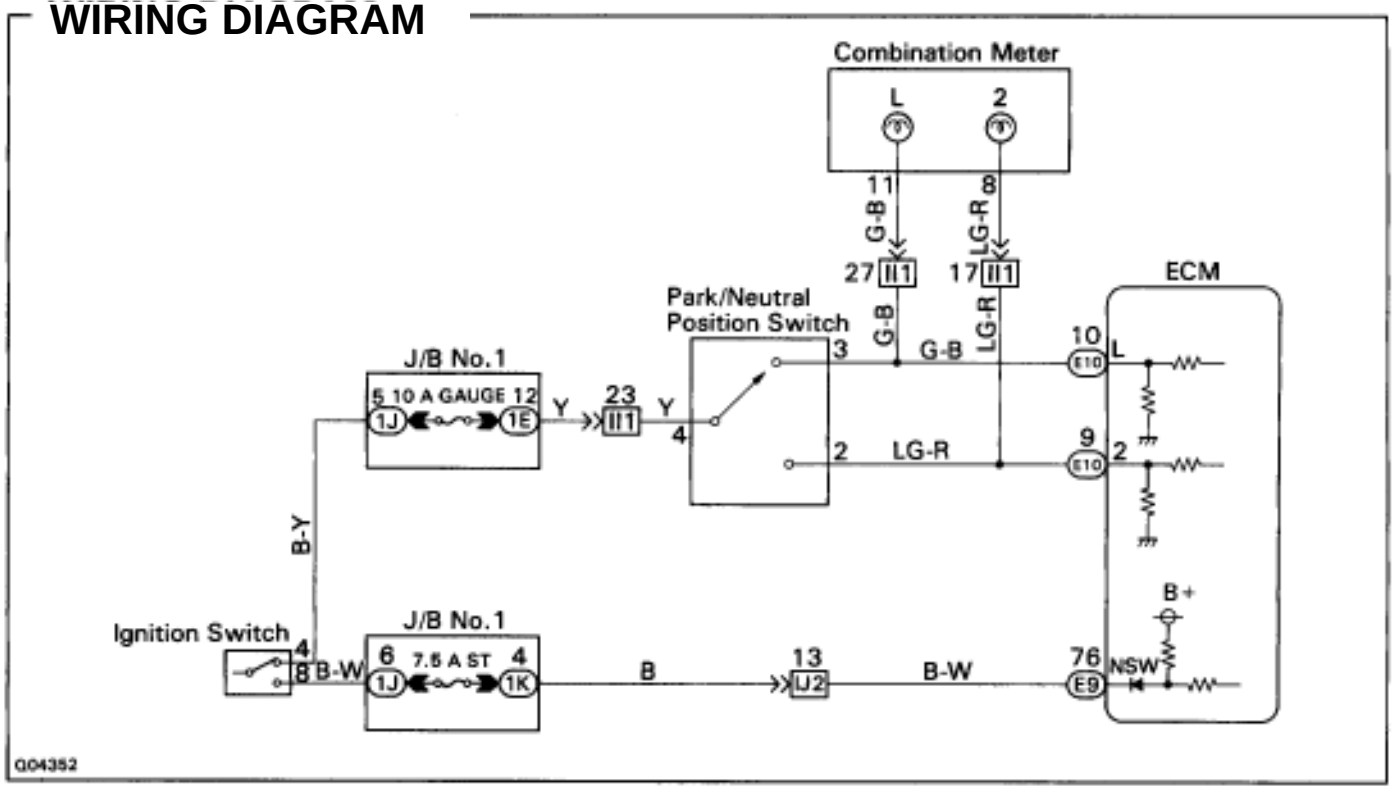

INSPECTION PROCEDURE

1 Check voltage between terminals NSW, 2, L of ECM connector and body ground.

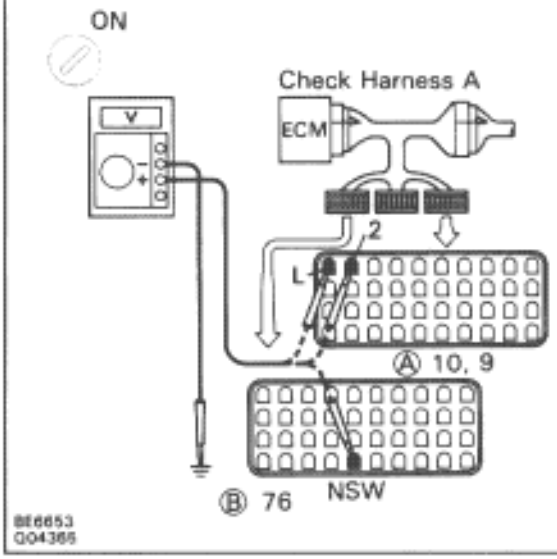

P
1. Connect the Check Harness A to the ECM (See page EG–404).
2. Turn ignition switch ON.

C
Measure voltage between terminals NSW, 2, L of ECM connector and body ground when the shift lever is positioned to the following positions.

OK

Position	NSW-body ground	2-body ground	L-body ground
P, N	3 V	Below 1.5 V	Below 1.5 V
R	9 – 14 V*	Below 1.5 V	Below 1.5 V
D	9 – 14 V	Below 1.5 V	Below 1.5 V
2	9 – 14 V	7.5 V – 14 V	Below 1.5 V
L	9 – 14 V	Below 1.5 V	7.5 V – 14 V

*: The voltage will drop slighty due to lighting up of the back up light.

NG

OK → Proceed to next circuit inspection shown on matrix chart (See page AT1–58).

2 Check park/neutral position switch.

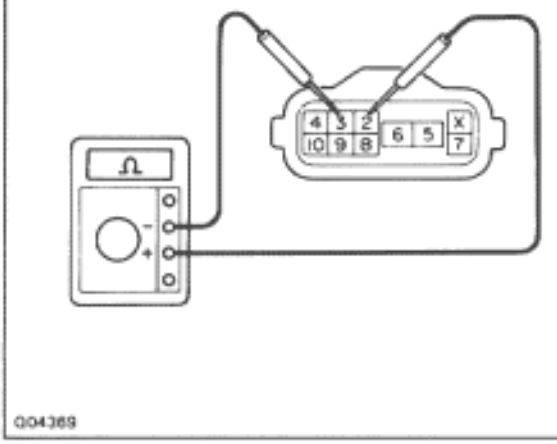

P
1. Jack up the vehicle.
2. Remove park/neutral position switch (See page AT1–15).

C
Check continuity between each terminal shown below when the shift lever is positioned to each position.

○—○ Continuity

Shift Position \ Terminal	6	5	4	7	8	10	9	2	3
P	○	○	○	○					
R			○		○				
N	○	○	○			○			
D			○				○		
2			○					○	
L			○						○

OK

NG → Replace park/neutral position switch.

3 Check harness and connector between battery and park/neutral position switch, park/neutral position switch and ECM (See page IN–30).

OK

NG → Repair or replace harness and connector.

Check and replace ECM.

Stop Light Switch Circuit

CIRCUIT DESCRIPTION

The purpose of this circuit is to prevent the engine from stalling, while driving in lock–up condition, when brakes are suddenly applied.
When the brake pedal is operated, this switch sends a signal to ECM. Then the ECM cancels operation of the lock–up clutch while braking is in progress.

WIRING DIAGRAM

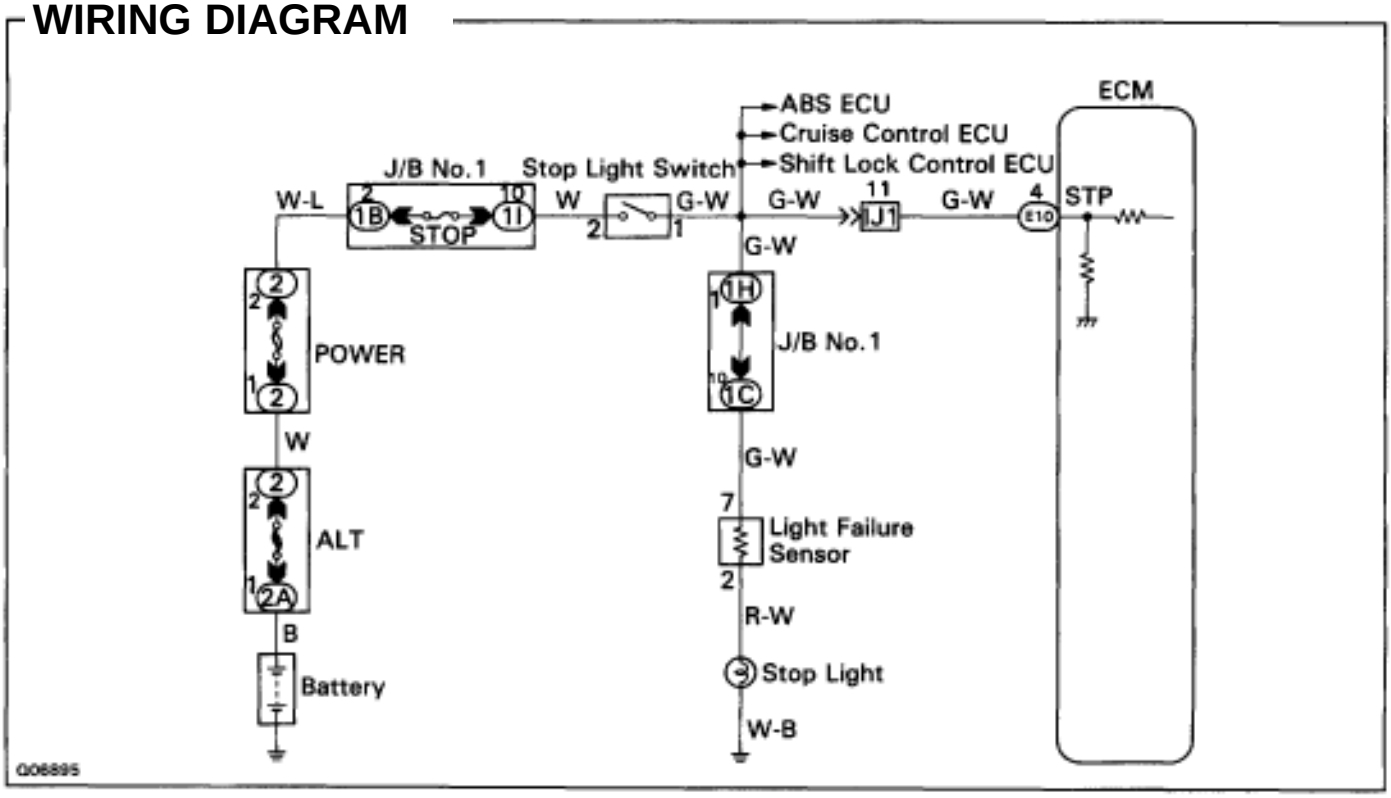

INSPECTION PROCEDURE

1 Check operation of stop light.

C Check if the stop lights go on and off normally when the brake pedal is depressed and released.

OK

NG Check and repair stop light circuit.

Go to 2 .

2 Check stop light signal.

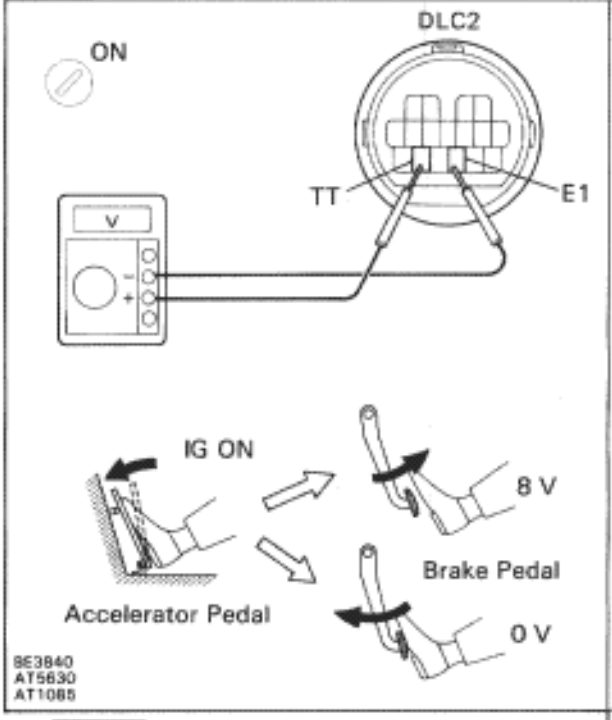

C

1. Connect a voltmeter to the terminals TT and E1 of the DLC2.
2. Turn ignition switch ON (Do not start the engine).
3. Fully depress the accelerator pedal until the voltmeter indicates 8 V and hold it.
4. Depress and release the brake pedal and check the voltage.

OK

Brake pedal	Voltage
Depressed	0 V
Released	8 V

NG

OK → Proceed to next circuit inspection shown on matrix chart (See page AT1–58).

3 Check harness and connector between ECM and stop light switch (See page IN–30).

OK

NG → Repair or replace harness or connector

Check and replace ECM.

Pattern Select Switch Circuit

CIRCUIT DESCRIPTION

The ECM memory contains the shift programs for the NORMAL and MANUAL patterns, 2 position, and L position and the lock–up patterns. Following the programs corresponding to the signals from the pattern select switch, the park/neutral position switch and other various sensors the ECM switches the solenoid valves ON and OFF, thereby controlling the transmission gear change and the lock–up clutch operation.

WIRING DIAGRAM

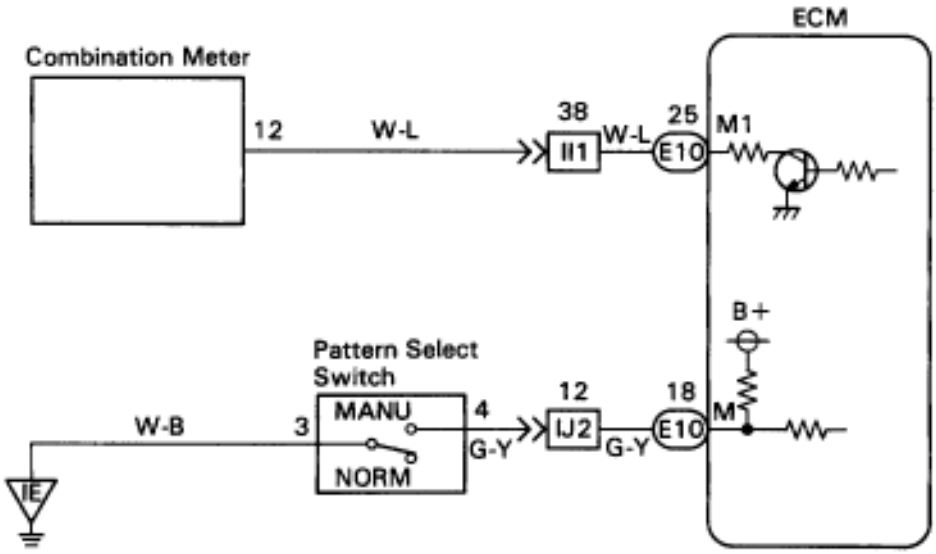

INSPECTION PROCEDURE

1 **Check A/T fluid temp. sensor. (See page AT1–64).**

NG → Replace A/T fluid temp. sensor.

OK

Go to **2** .

2 Check if A/T fluid is too hot.

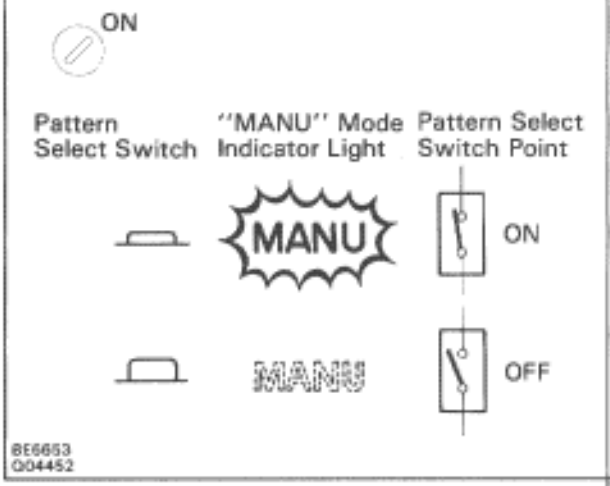

C
1. Turn ignition siwtch ON.
2. Check "MANU" mode indicator light when pattern select switch is pushed in to ON.

OK "MANU" mode indicator light comes on and stays on.

Hint If the A/T fluid temp. becomes too hot, the "MANU" mode indicator light flashes for several seconds and goes off. The driving mode then automatically changes from MANU mode to the NORM mode.

OK

NG Wait until the A/T fluid temp. is reduced.

3 Check voltage between terminal M of ECM connector and body ground.

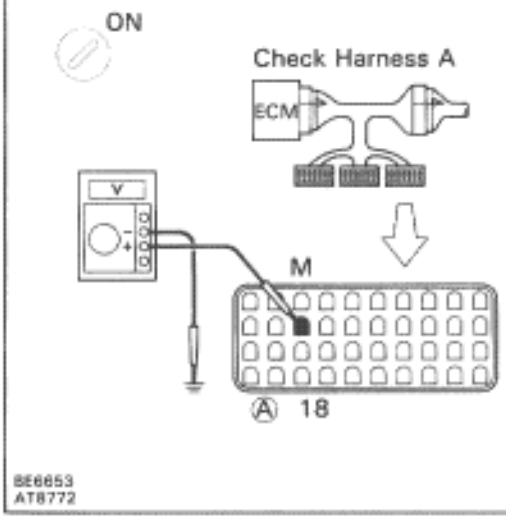

P
1. Connect the Check Harness A to the ECM (See page EG–404).
2. Turn igntion switcn ON.

C Measure voltage between the terminal M of ECM connector and body ground when the pattern select switch is set to the MANU (MANUAL) position and NORM (NORMAL) position.

OK

Pattern select switch	Voltage
MANU	7.5 – 14 V
NORM	Below 1.5 V

Hint The ECM uses the Normal pattern signal if the Manual signal is not input.

NG

OK Proceed to next circuit inspection shown on matrix chart. (See page AT1–58)

Go to step 4 .

4 **Check pattern select switch.**

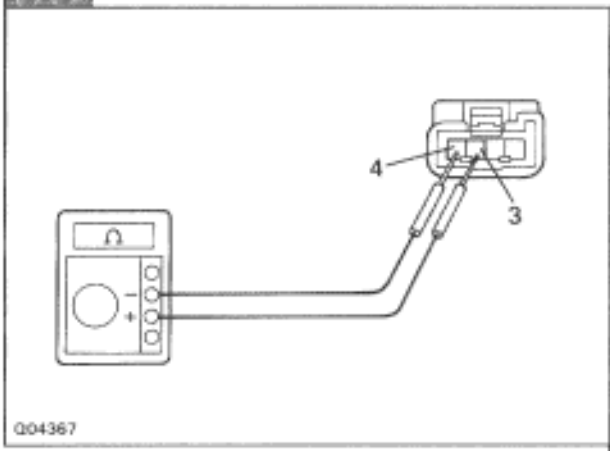

P Disconnect the pattern select switch connector.

C Measure resistance between terminals 3 and 4 of the pattern select switch connector when the select switch is set to the MANU and NORM positions.

OK

Pattern	Resistance
MANU	0 Ω (continuity)
NORM	∞ Ω (open)

OK

NG → Replace pattern select switch.

5 **Check harness and connector between battery and pattern select switch, pattern select switch and ECM (See page IN–30).**

OK

NG → Repair or replace harness or connector.

Check and replace ECM.

O D Main Switch & O D OFF Indicator Light Circuit

CIRCUIT DESCRIPTION

The O/D main switch contacts go off when the switch is pushed in and come on when it is pushed out. In O/D main switch OFF position, the O/D OFF indicator light lights up, and the ECM prohibits shifting to overdrive. The ECM also causes the O/D OFF indicator light to blink when a malfunction is detected. In this case, connecting the terminals in the DLC2 or DLC1 can display the malfunction code.

WIRING DIAGRAM

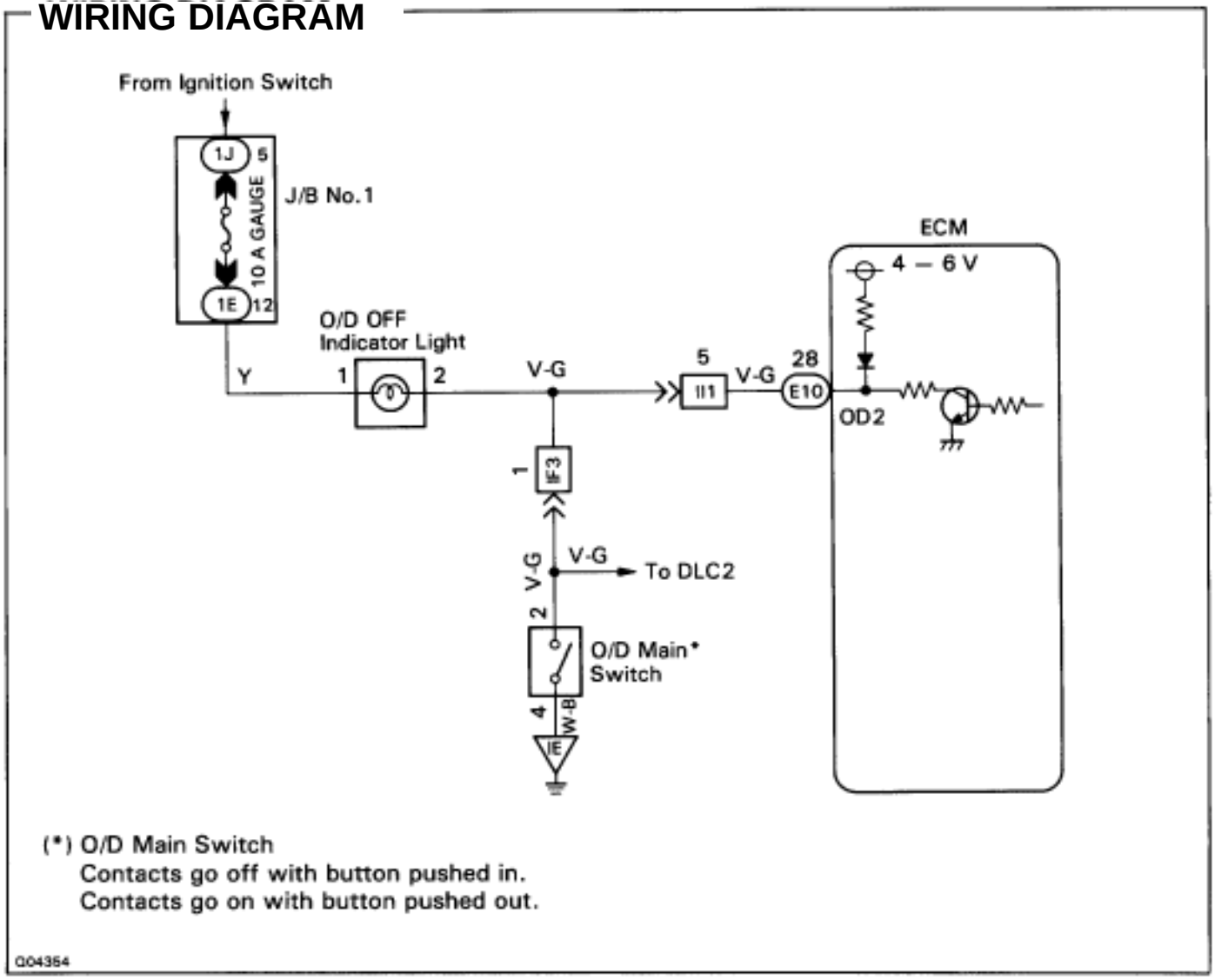

INSPECTION PROCEDURE

O/D OFF indicator light does not light up.

1 Check operation of O/D main switch.

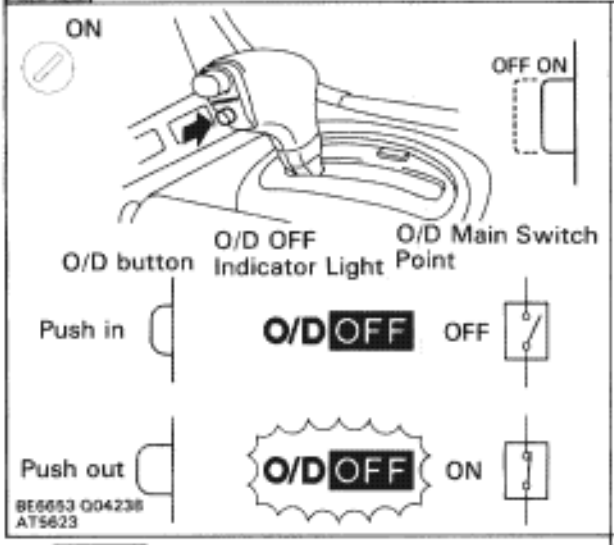

C
1. Turn ignition switch ON.
2. Check “O/D OFF” indicator light when O/D main switch is pushed in to ON.

OK ”O/D OFF” indicator light goes off.

C
3. Check “O/D OFF” indicator light when O/D main switch is pushed again, to OFF.

OK ”O/D OFF” indicator light lights up.

Hint If the “O/D OFF” indicator light blinks when the O/D main switch is pushed in to ON, a malfunction is occurring in the system.
Check the diagnostic trouble code.

OK

NG → Go to step 4.

2 Check voltage between terminal OD2 of ECM connector and body ground.

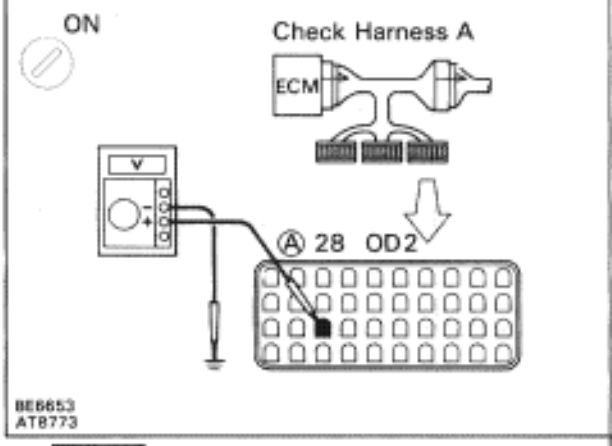

P
1. Connect the Check Harness A to the ECM (See page EG–404).
2. Turn ignition switch ON.

C Check voltage between terminal OD2 of the ECM and body ground.

OK

O/D Main Switch	Voltage
OFF	Below 3 V
ON	9 – 14 V

NG

OK → Proceed to next circuit inspection shown on matrix chart (See page AT1–58).

3 Check harness and connecter between O/D off indicator light and ECM (See page IN–30).

OK

NG → Repair or replace harness or connector.

Check and replace ECM.

4 Check O/D main switch.

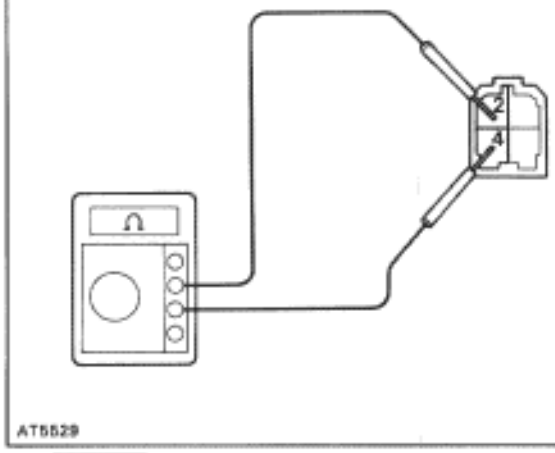

C
1. Disconnect the O/D main switch connector.
2. Measure resistance between terminals 2 and 4 of O/D main switch connector.

OK

O/D Main Switch	Resistance
ON	∞ Ω (open)
OFF	0 Ω (continuity)

OK

NG → Replace O/D main switch.

Check and replace combination meter.
(See combination meter troubleshooting section on page BE–41).

O/D OFF indicator light remains ON

1 Check O/D main switch.

OK

NG → Replace O/D main switch.

2 Check harness and connector between O/D off indicator light and ECM (See page IN–30).

OK

NG → Repair or replace harness or connector.

Check and replace ECM.

O/D OFF indicator light blinks

Do diagnostic trouble code check (See page AT1–52).

O D Cancel Signal Circuit

CIRCUIT DESCRIPTION

While driving with cruise control activated, in order to minimize gear shifting and provide smooth uphill cruising, overdrive may be prohibited temporarily in some conditions.
The Cruise Control ECU sends O/D cut signals to the ECM as necessary and the ECM cancels overdrive shifting until these signals are discontinued.
(For details, see the cruise control section, page BE–162)

WIRING DIAGRAM

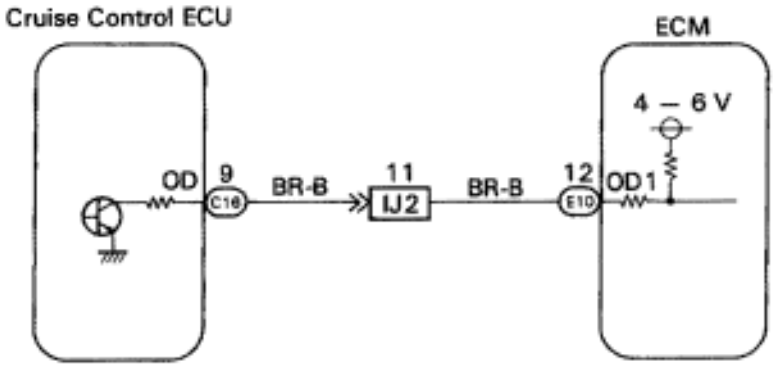

INSPECTION PROCEDURE

1 **Check voltage between terminal OD1 of ECM connector and body ground.**

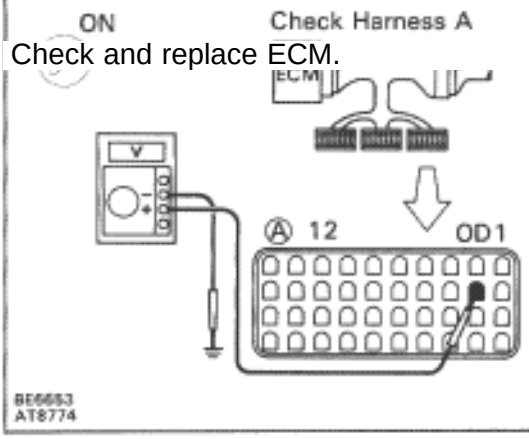

P
1. Connect the Check Harness A to the ECM (See page EG–404).
2. Turn ignition switch ON.

C Measure voltage between terminal OD1 of ECM connector and body ground.

OK Voltage: 4 – 6 V

NG → Check and replace ECM.

OK → Proceed to next circuit inspection shown on matrix chart (See page AT1–58).

2 **Check voltage between terminal OD of Cruise Control ECU harness side connector and body ground.**

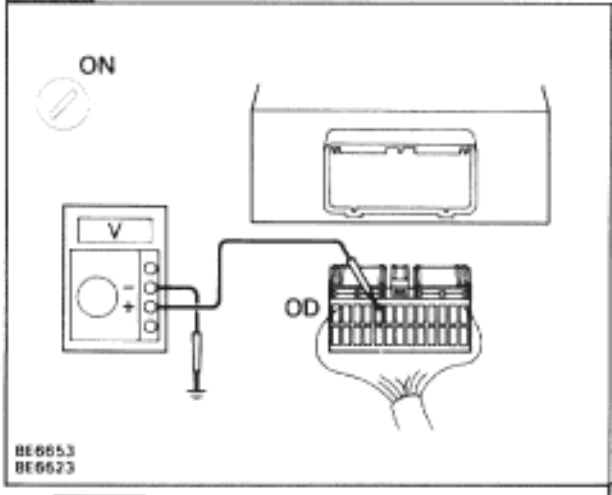

P
1. Disconnect Cruise Control ECU connector.
2. Turn ignition switch ON.

C
Measure voltage between terminal OD of Cruise Control ECU harness side connector and body ground.

OK
Voltage 4 – 6 V

NG

OK → Check and replace Cruise Control ECU.

3 **Check harness and connector between Cruise Control ECU and ECM (See page IN–30).**

OK

NG → Repair or replace harness or connector.

Check and replace ECM.

TE1 Terminal Circuit

CIRCUIT DESCRIPTION

ECM displays diagnostic trouble codes using the O/D OFF indicator light when terminals TE1 and E1 of the DLC2 or DLC1 are connected.

WIRING DIAGRAM

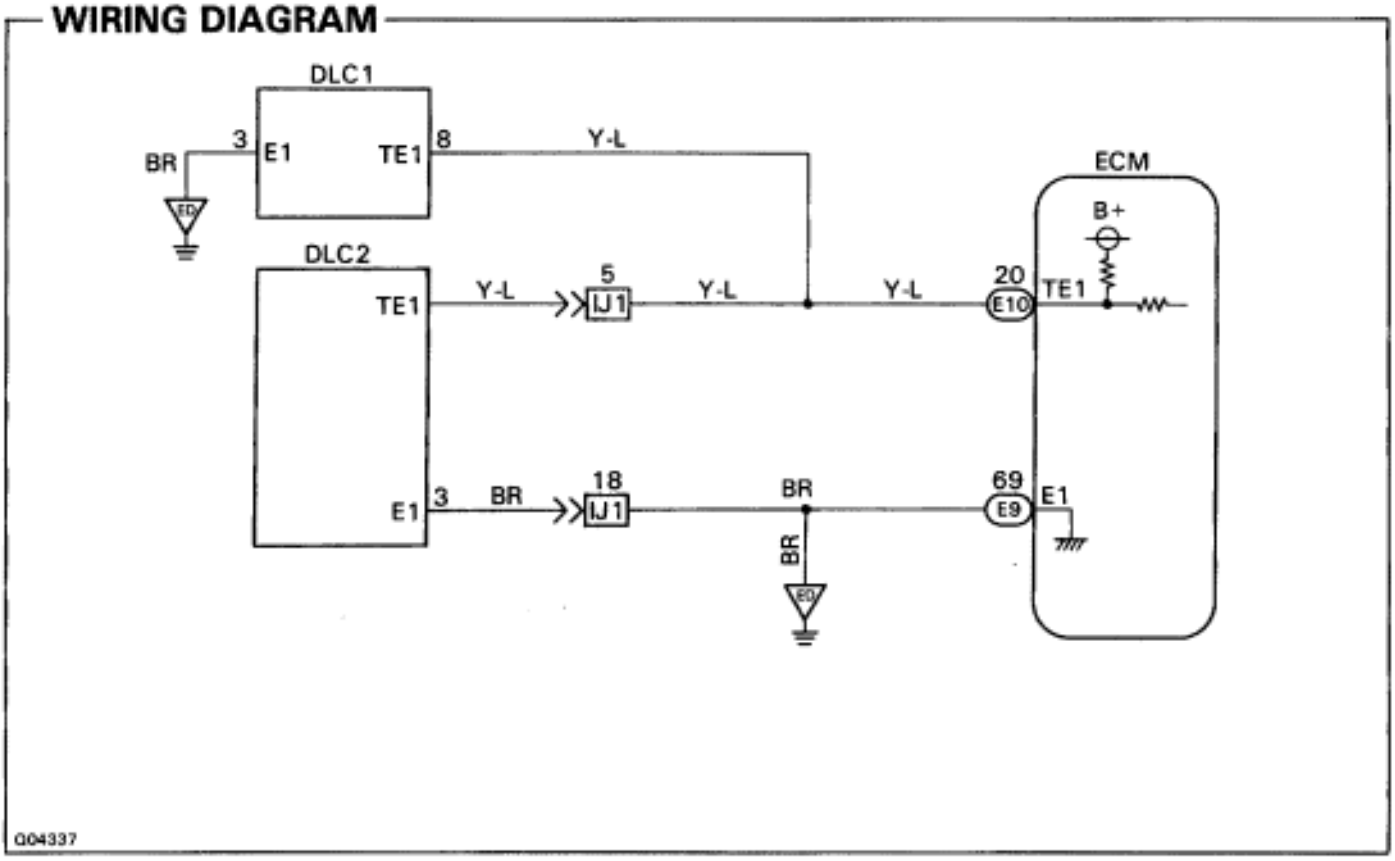

INSPECTION PROCEDURE

1 **Check voltage between terminal TE1 and E1 of DLC2 or DLC1.**

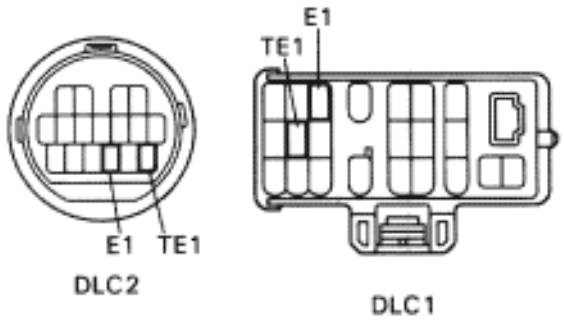

S-17-1 lej-23-1-A

C Measure voltage between terminals TE1 and E1 of DLC2 or DLC1.

OK Voltage 4 – 6 V

NG

OK → Proceed to next circuit inspection shown on matrix chart (See page AT1–58).

2 **Check harness and connector between ECM and DLC2, DLC1 and body ground (See page IN–30).**

OK

NG → Repair or replace harness or connector.

Check and replace ECM.

TT Terminal Circuit

CIRCUIT DESCRIPTION

Checks of ECM input and output signals related to the throttle position sensor, brakes, shift position and other circuits can be performed by measuring the voltages at terminal TT of the DLC2

WIRING DIAGRAM

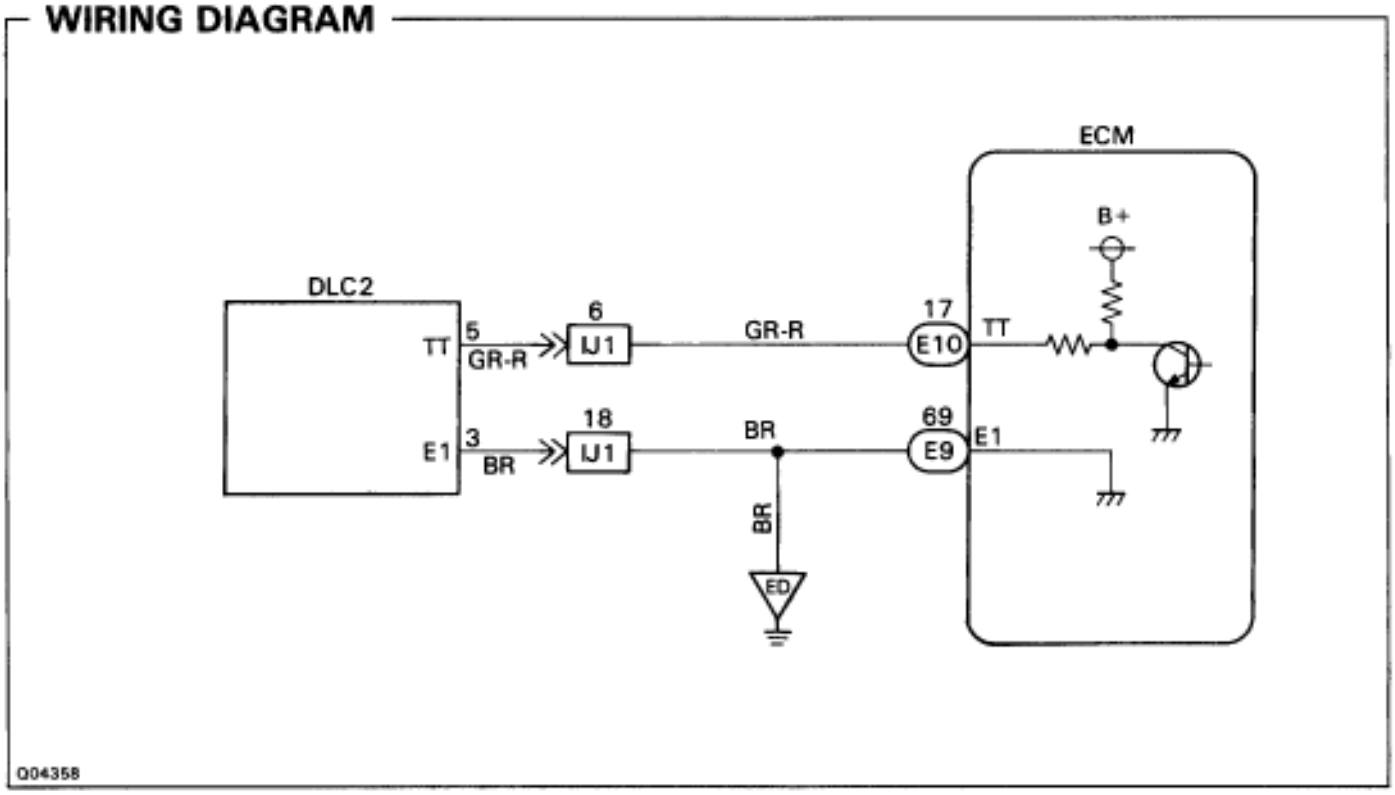

INSPECTION PROCEDURE

1	**Check harness and connector between ECM and DLC2 and body ground (See page IN–30).**

OK → Check and replace ECM.

NG → Repair or replace harness or connector.

SERVICE SPECIFICATIONS

SERVICE DATA

Line pressure (wheel locked) Engine idling			
D position	363–422 kPa	3.7–4.3 kgf/cm^2	53–61 psi
R position	500–598 kPa	5.1–6.1 kgf/cm^2	73–88 psi
AT stall (Throttle valve fully opened)			
D position	902–1,147 kPa	9.2–11.7 kgf/cm^2	131–166 psi
R position	1,236–1,589 kPa	12.6–16.2 kgf/cm^2	179–230 psi
Engine stall revolution (D and R position)	2,200±150 rpm		
Time lag N → D position	Less than 1.2 seconds		
N → R position	Less than 1.5 seconds		
Engine idle speed (In N position and air conditioner OFF)	700±50 rpm		
Throttle cable adjustment	Between boot and face and inner cable stopper		
(Throttle valve fully closed)	0–1 mm	0–0.04 in.	
Drive plate runout Max	0.20 mm	0.0079 in.	
Torque converter clutch runout Max	0.30 mm	0.0118 in.	

SHIFT POINT

NORM Mode

Shift Position	Shifting Point		Vehicle speed km/h (mph)
D	Throttle valve fully opened	1→2	53–62 (33–39)
		2→3	104–112 (65–70)
		3→O/D	163–175 (101–109)
		O/D→3	157–169 (98–105)
		3→2	98–105 (61–65)
		2→1	42–48 (26–30)
	Throttle valve fully closed	3→O/D	34–39 (21–24)
		O/D→3	20–25 (12–16)
2	Throttle valve fully opened	1→2	53–62 (33–39)
		* 3→2	121–132 (75–82)
		2→1	42–48 (26–330)
L	Throttle valve fully opened	* 2→1	48–53 (30–33)

MANU Mode

Shift Position	Shifting Point		Vehicle speed km/h (mph)
D	Throttle valve fully opened	2→3	104–112 (65–70)
		3→O/D	163–175 (101–109)
		O/D→3	157–169 (98–109)
		3→2	98–105 (61–65)
	Throttle valve fully closed	3→O/D	163–175 (101–109)
		O/D→3	20–25 (12–16)
2	Throttle valve fully opened	* 3→2	121–132 (75–82)
L	Throttle valve fully opened	* 2→1	48–53 (30–33)

LOCK–UP POINT

NORM Mode

D position km/h (mph) Throttle valve opening 5%	Lock–up ON	Lock–up OFF
3rd Gear (O/D switch OFF)	56–62 (35–39)	53–59 (35–39)
O/D Gear	56–62 (35–39)	53–59 (35–39)

MANU Mode

D position km/h (mph) Throttle valve opening 5%	Lock–up ON	Lock–up OFF
3rd Gear (O/D switch OFF)	98–105 (61–65)	92–99 (57–62)
O/D Gear	163–175 (101–109)	56–62 (35–39)

HINT:

(1) There is no lock–up in the 2 and L positions.

(2) In the following cases, the lock–up will be released regardless of the lock–up pattern.

- When the throttle valve is completely closed.
- When the brake light switch is ON.

(3) Shift up to 3rd will not occur when the engine coolant temp. is below 35˚C (95˚F) and the vehicle speed is below 40 km/h (25 mph).

(4) Shift–up to O/D will not occur when the engine coolant temp. is below 60˚C (140˚F) and the vehicle speed is below 63 km/h (39 mph)

(5) When the vehicle speed drops to 10 km/h (6 mph) or more below the cruise control set vehicle speed, shift down from O/D to 3rd occurs.

TORQUE SPECIFICATIONS

Part tightened		N·m	kgf·cm	ft·lbf
Engine block X Transmission	14 mm	37	380	27
	17 mm	72	730	53
Rear mounting X Body		25	260	19
Extension housing X Transmission case		36	370	27
Valve body X Transmission case		10	100	7
Oil strainer		10	100	7
Oil pan		7.4	75	65 in.·lbf
No.1 vehicle speed sensor		16	160	12
No.2 vehicle speed sensor		5.4	55	48 in.·lbf
Solenoid wiring stopper plate		5.4	55	48 in.·lbf
Rear center floor crossmember brace X Body		13	130	9
Propeller shaft X Differential		79	805	58
Manual shift linkage X Control shaft lever		13	130	9
Center support bearing X Body		49	500	36
Throttle cable X Transmission case		5.4	55	48 in.·lbf
Cooler pipe union nut		34	350	25
Drive plate X Crankshaft		74	750	54
Torque converter clutch X Drive plate		33	340	25
Control shaft lever X Park/Neutral position switch		16	160	12
A/T fluid temp. sensor		15	150	11
Drain plug		20	205	15
Solenoid valve X Valve body		10	100	7
Parking lock pawl bracket		7.4	75	65 in.·lbf
Transmission mounting bracket X Extension housing		25	250	18
Heat insulator X Body		5.4	55	48 in.·lbf
Starter		37	380	27

A340E (2JZ–GTE)
AUTOMATIC TRANSMISSION

OPERATION

FUNCTION OF COMPONENTS

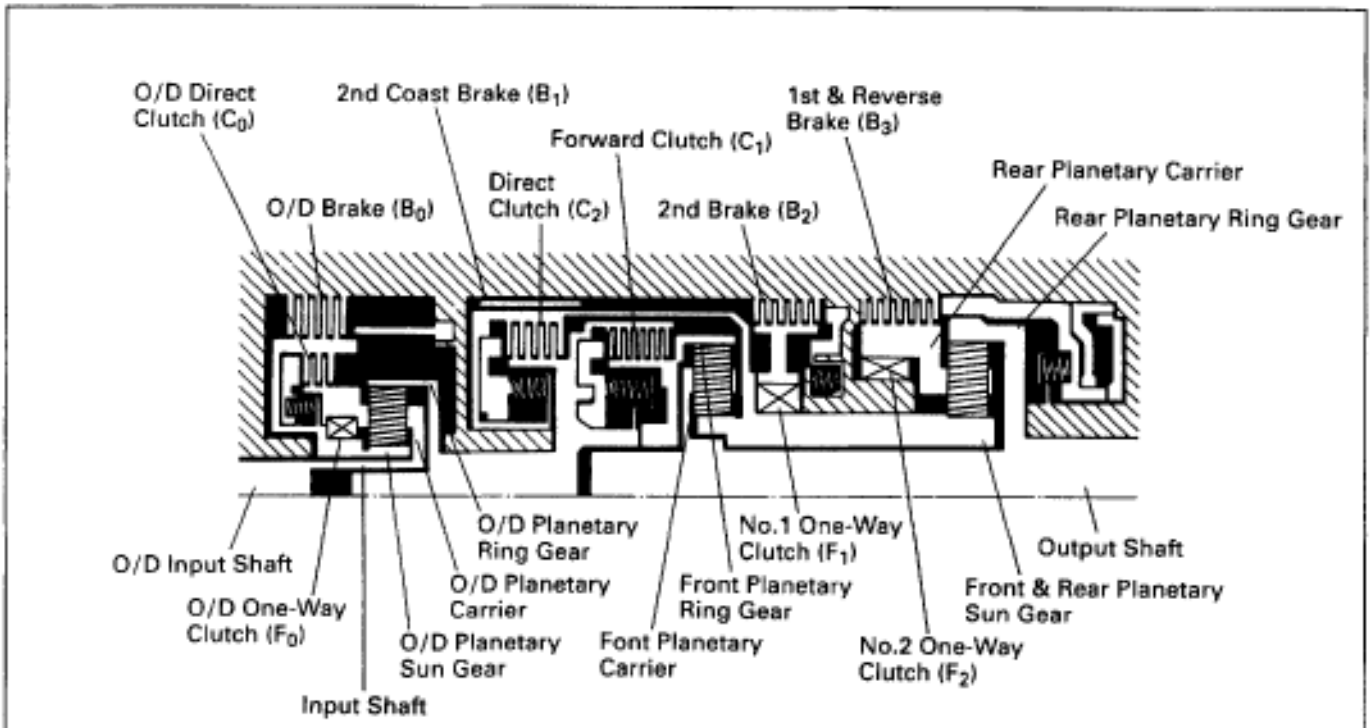

AT2157

○ ..... Operating

Shift lever position	Gear position	C_0	C_1	C_2	B_0	B_1	B_2	B_3	F_0	F_1	F_2
P	Parking	○									
R	Reverse	○		○				○	○		
N	Neutral	○									
D	1st	○	○						○		○
	2nd	○	○				○		○	○	
	3rd	○	○	○			○		○		
	O/D		○	○	○		○				
2	1st	○	○						○		○
	2nd	○	○			○	○		○	○	
	*3rd	○	○	○			○		○		
L	1st	○	○					○	○		○
	*2nd	○	○			○	○		○	○	

*Down–shift only–no up–shift

Component	Function
O/D Direct Clutch (C_0)	Connect overdrive sun gear and overdrive carrier
O/D Brake (B_0)	Prevents overdrive sun gear from turning either clockwise or counterclockwise
O/D One–Way Clutch (F_0)	When transmission is being driven by engine, connects overdrive sun gear and overdrive carrier
Forward Clutch (C_1)	Connects input shaft and front planetary ring gear
Direct Clutch (C_2)	Connects input shaft and front & rear planetary sun gear
2nd Coast Brake (B_1)	Prevents front & rear planetary sun gear from turning either clockwise or counterclockwise
2nd Brake (B_2)	Prevents outer race of F_1 from turning either clockwise or counterclockwise, thus preventing front & rear planetary sun gear from turning counterclockwise
1st & Reverse Brake (B_3)	Prevents rear planetary carrier from turning either clockwise or counterclockwise
No.1 One–Way clutch (F_1)	When B_2 is operating, prevents front & rear planetary sun gear from turning counterclockwise
No.2 One–Way Clutch (F_2)	Prevents rear planetary carrier from turning counterclockwise

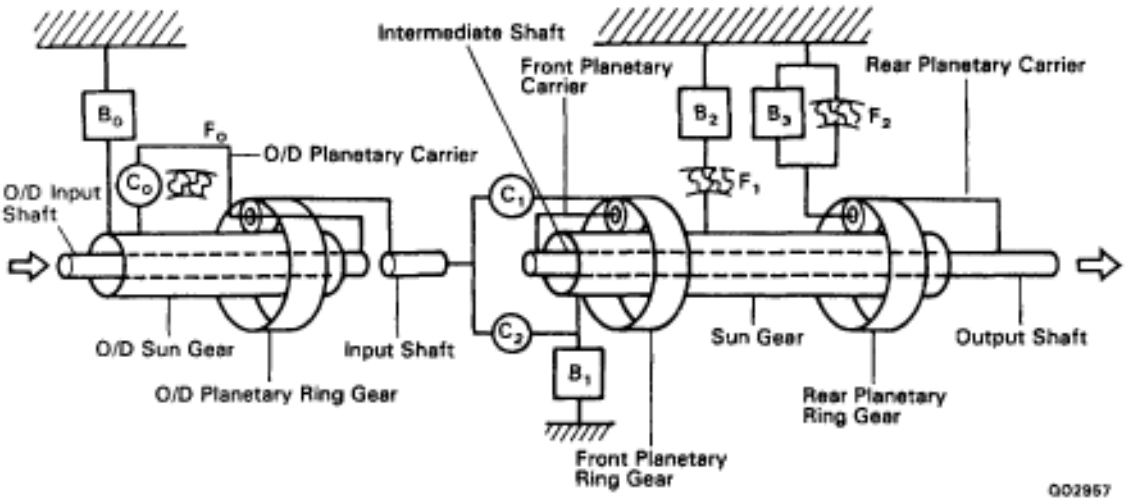

D or 2 Position 1st Gear

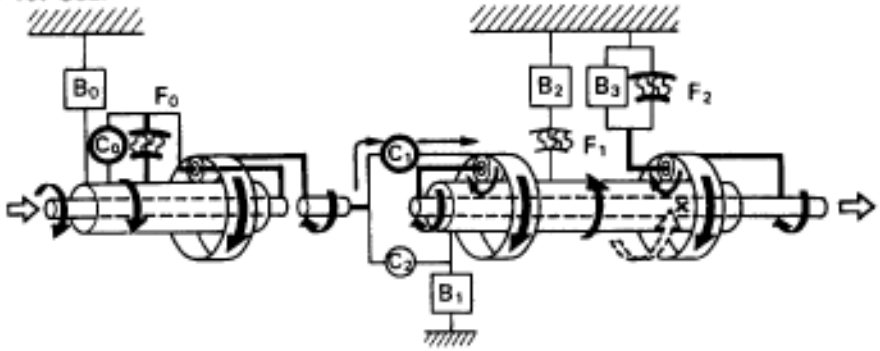

AT6675

D Position 2nd Gear

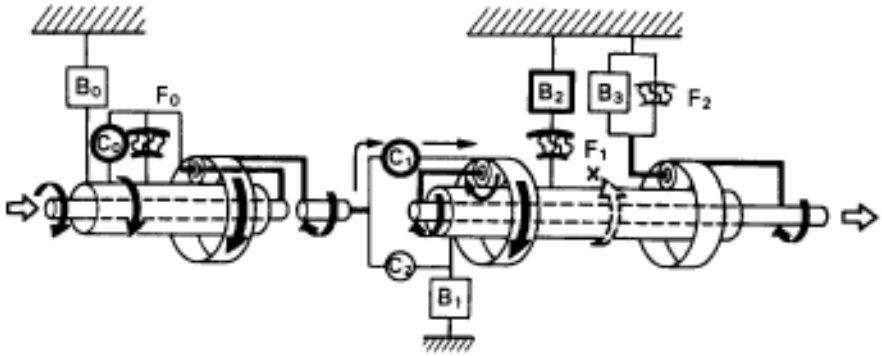

AT6676

D or 2 Position 3rd Gear

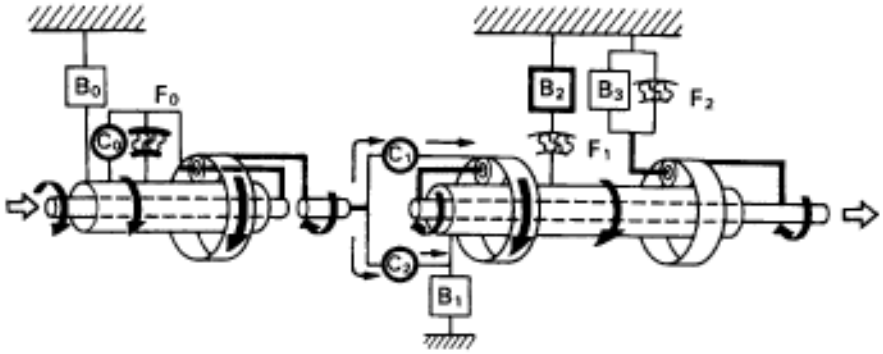

AT6677

D Position O/D

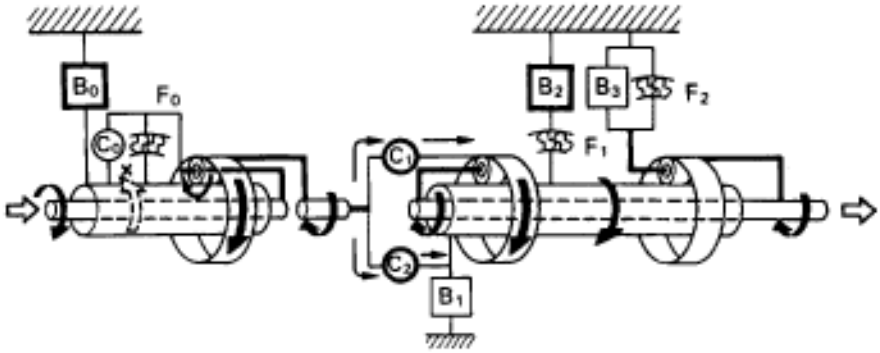

AT6678

2 or L Position 2nd Gear

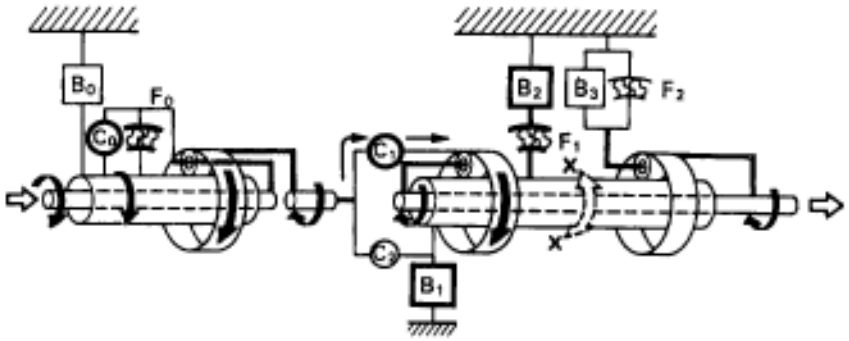

AT6679

L Position 1st Gear

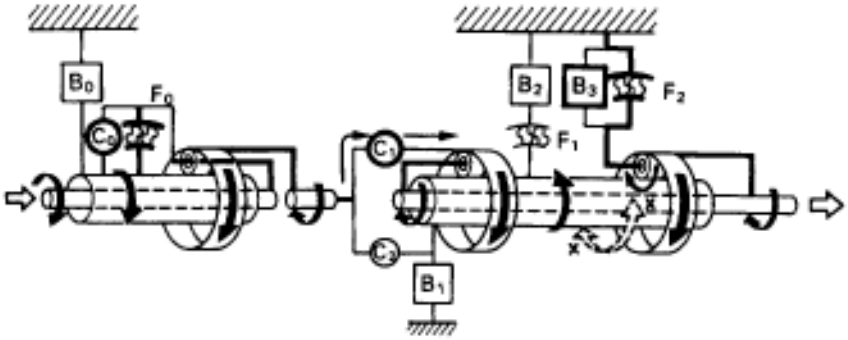

AT6680

R Position Reverse Gear

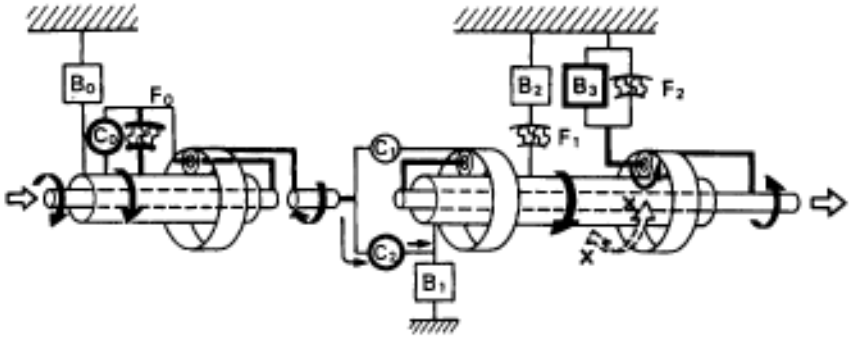

AT6681

HYDRAULIC CONTROL SYSTEM

The hydraulic control system is composed of an oil pump, valve body, solenoid valves, accumulators, clutches and brakes, as well as the fluid passages which connect all of these components. Based on the hydraulic pressure created by the oil pump, the hydraulic control system governs the hydraulic pressure acting on the torque converter clutch, clutches and brakes in accordance with the vehicle driving conditions.

There are five solenoid valves on the valve body.

The No.1 and No.2 solenoid valves are turned on and off by signals from the ECM to control the shift valves, and change the gear shift position.

The No.3 solenoid valve is operated by signals from the ECM to engage or disengage the lock–up clutch of the torque converter clutch.

The No.4 solenoid valve is operated by signals from the ECM to control the engagement speed and reduce gear shift shock.

The No.5 solenoid valve is operated by signals from the ECM to regulate the line pressure to throttle pressure.

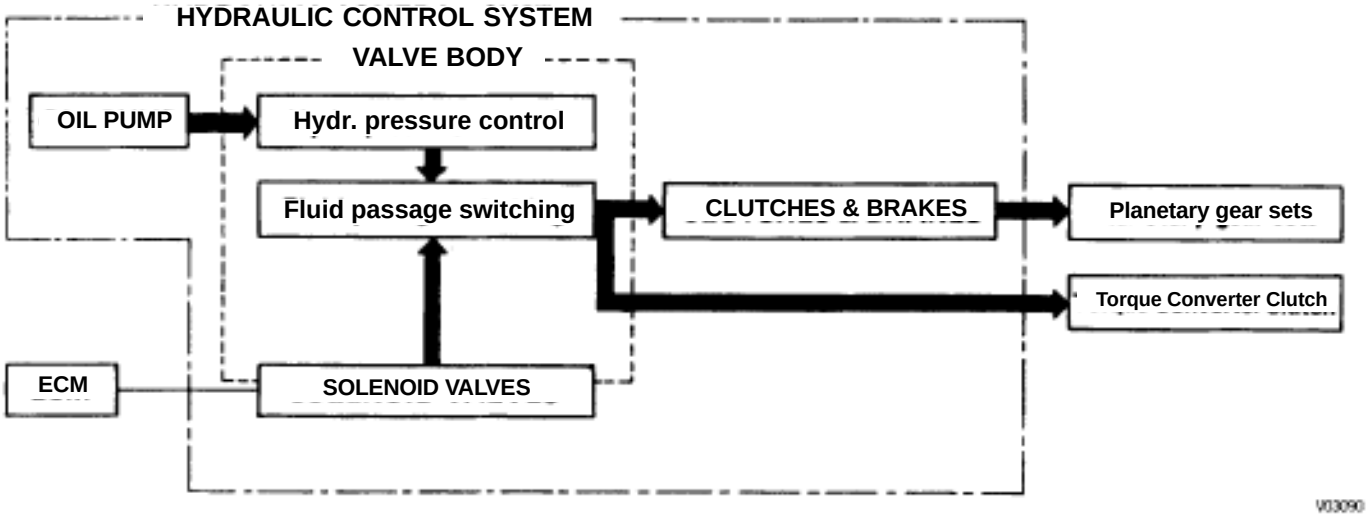

ELECTRONIC CONTROL SYSTEM

The electronic control system for the A340E automatic transmission provides extremely precise control of the gear shift timing and lock–up timing in response to driving conditions as sensed by various sensors located throughout the vehicle and in response to the engine's running condition.

At the same time, the ECM control reduces vehicle squat when the vehicle starts out and gear shift shock.

The electronic control system is also equipped with a self diagnosis system which diagnoses malfunctions for the vehicle to continue functioning when a malfunction occurs.

CONSTRUCTION

The electronic control system can be broadly divided onto three groups; the sensors, ECM and actuators.

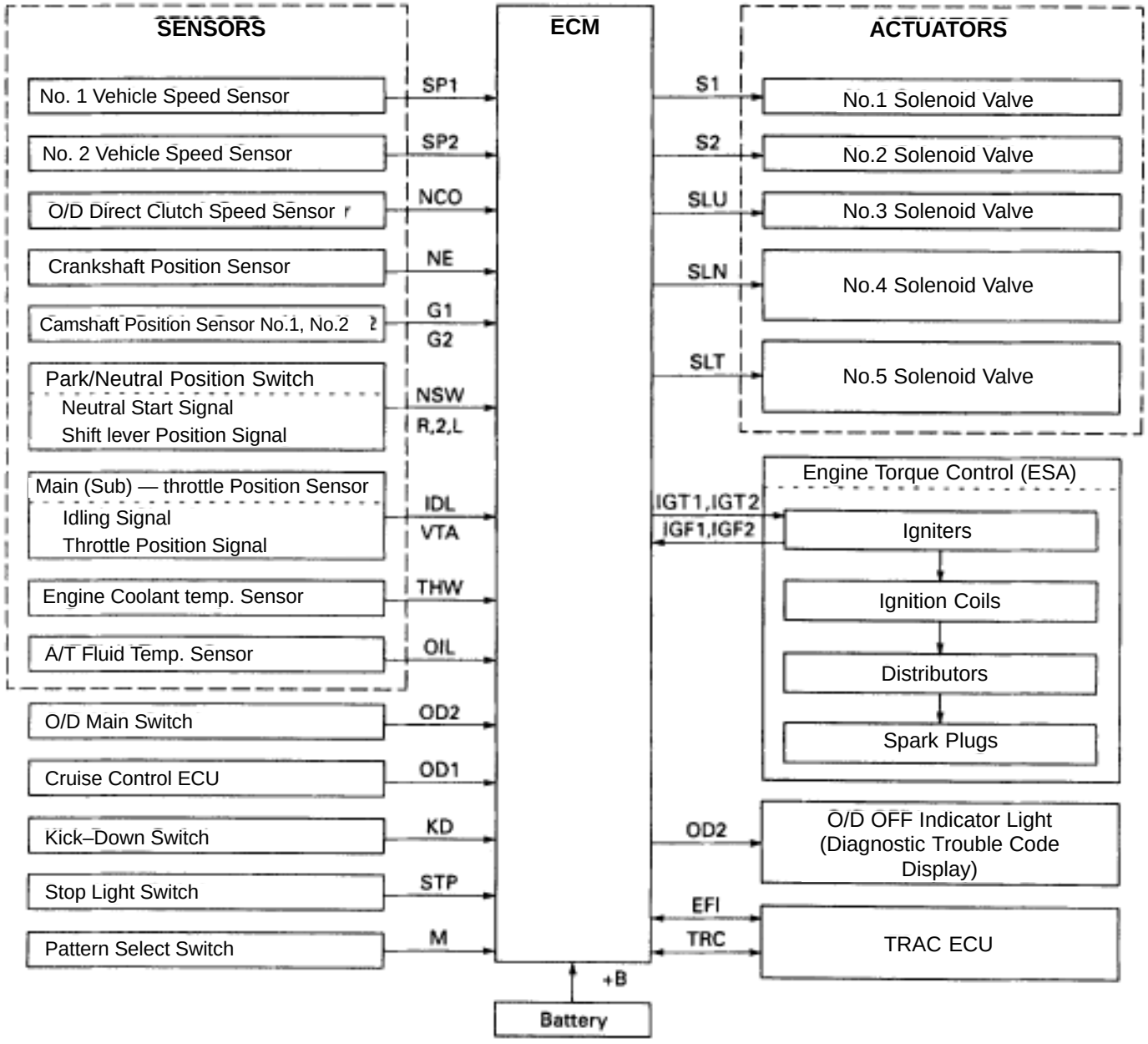

SYSTEM DIAGRAM

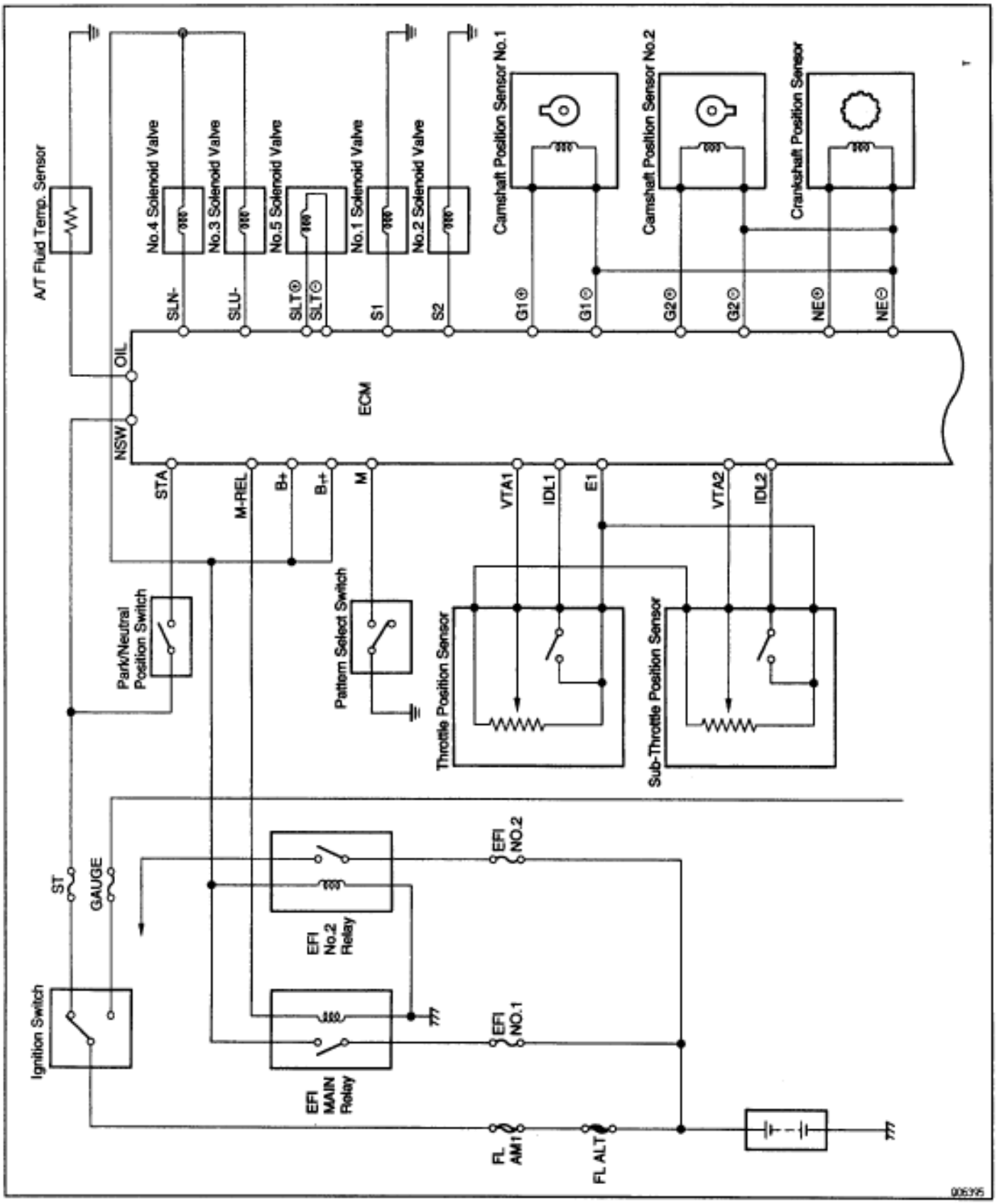

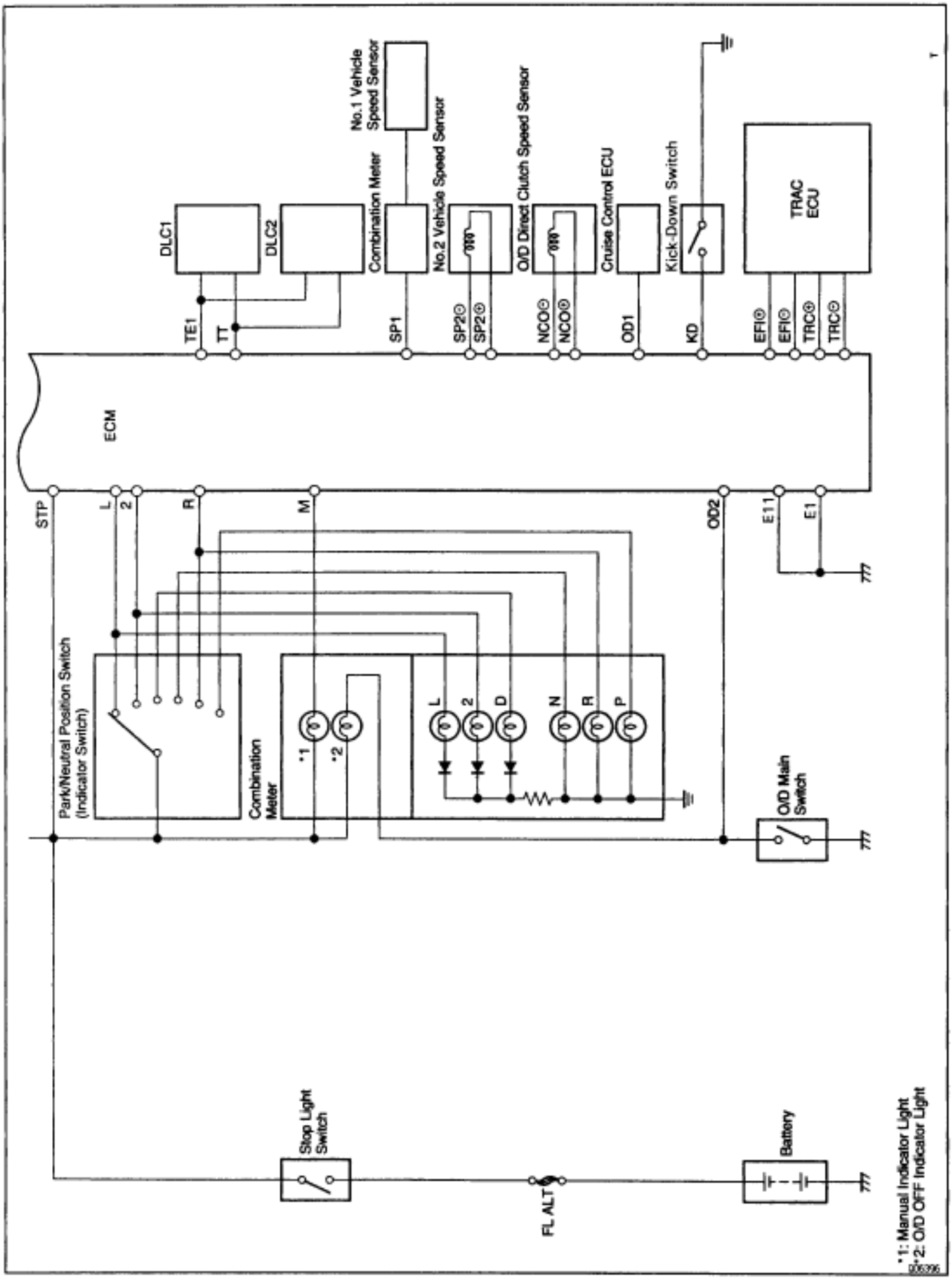
DLC1
DLC2
Combination Meter
No.1 Vehicle Speed Sensor
No.2 Vehicle Speed Sensor
O/D Direct Clutch Speed Sensor
Cruise Control ECU
Kick-Down Switch
TRAC ECU
TE1
TT
SP1
SP2⊖
SP2⊕
NCO⊖
NCO⊕
OD1
KD
EFI⊕
EFI⊖
TRC⊕
TRC⊖
ECM
STP
L
2
R
M
OD2
E11
E1
Park/Neutral Position Switch (Indicator Switch)
Combination Meter
*1
*2
L
2
D
N
R
P
O/D Main Switch
Stop Light Switch
FL ALT
Battery
*1: Manual Indicator Light
*2: O/D OFF Indicator Light

ARRANGEMENT OF COMPONENTS

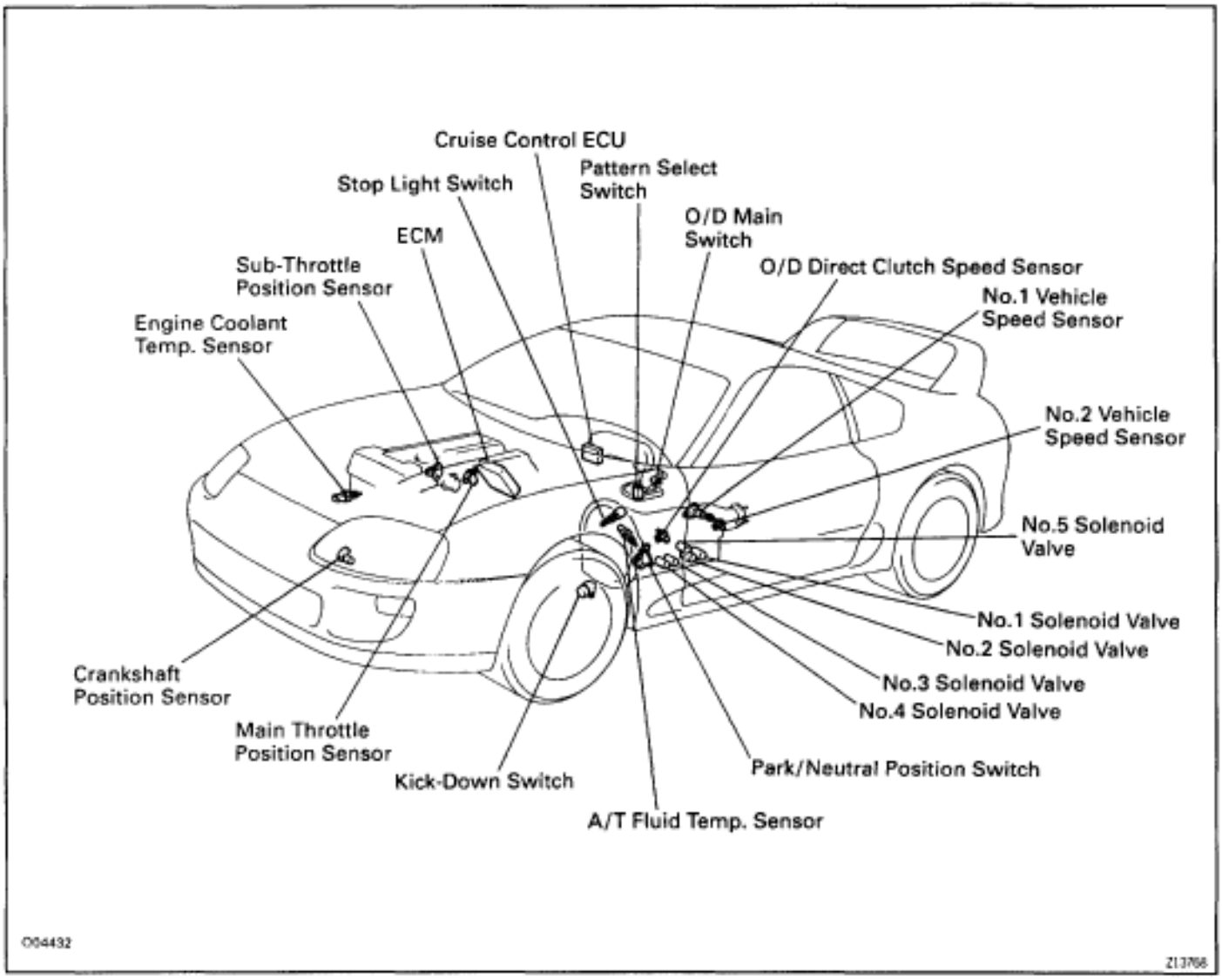

Components	Function
Pattern Select Switch	Selects the Power mode or the Normal mode for shift and lock–up timing.
Crankshaft Position Sensor and Camshaft Position Sensor	Detects the engine speed.
Park/Neutral Position Switch	Detects the shift lever position.
Stop Light Switch	Detects if the brake pedal is depressed.
Throttle Position Sensor	Detects the throttle valve opening angle.
O/D Main Switch	Prevents up–shift to the O/D gear if the O/D switch is off.
Cruise Control ECU	This ECU prevents the transmission from shifting into O/D and prohibits lock–up control when the vehicle's speed drops below the cruise control set speed parameter.
No.1 and No.2 Vehicle Speed Sensor.	Detects the vehicle speed. Ordinarily, transmission control uses signals from the No.2 vehicle speed sensor, and the No.1 vehicle speed sensor is used as a back–up.

O/D Direct Clutch Speed Sensor	Detects the input shaft speed from 1st gear to 3rd gear
Engine Coolant Temp. Sensor	Detects the engine coolant temp.
ECM	Controls the engine and transmission actuators based on signals from each sensor.
No.1 and No.2 Solenoid Valves	Control the hydraulic pressure applied to each shift valve, and control the gear position and timing.
No.4 Solenoid Valve (For accumulator back pressure modulation)	Controls the hydraulic pressure applied to the back chamber of the accumulator and smoothes the engagement of clutches and brakes during shifting.
No.3 Solenoid Valve (For lock–up control pressure modulation)	Controls the hydraulic pressure applied to the lock–up clutch and controls lock–up timing.
No.5 Solenoid Valve (For line pressure modulation)	Controls the line pressure.
O/D OFF Indicator Light	Blinks and warns the driver, while the O/D main switch is pushed in, when the electronic control circuit is malfunctioning.
A/T Fluid Temp. Sensor	Detects A/T fluid temp.

PRECAUTION

PRECAUTIONS

When working with FIPG material, you must observe the following.

- Using a razor blade and gasket scraper, remove all the old packing (FIPG) material from the gasket surfaces.
- Thoroughly clean all components to remove all the loose material.
- Clean both sealing surfaces with a non–residue solvent.
- Apply the FIPG in an approx. 1 mm (0.04 in.) wide bead along the sealing surface.
- Parts must be assembled within 10 minutes of application. Otherwise, the FIPG material must be removed and reapplied.

If the vehicle is equipped with a mobile communication system, refer to the precaution in the IN section.

PREPARATION

SST (SPECIAL SERVICE TOOLS)

	09032–00100 Oil Pan Seal Cutter	
	09308–00010 Oil Seal Puller	
	09309–37010 Transmission Bearing Replacer	
	09350–30020 TOYOTA Automatic Transmission Tool Set	
	(09351–32010) One–way Clutch Test Tool	
	(09351–32020) Stator Stopper	
	09517–36010 Rear Axle Shaft Oil Seal Replacer	
	09843–18020 Diagnosis Check Wire	
	09990–01000 Engine Control Computer Check Harness “A”	

	09992–00094 Automatic Transmission Oil Pressure Gauge Set	

RECOMMENDED TOOLS

	09082–00050 TOYOTA Electrical Toaster Set	

EQUIPMENT

Straight edge	Check torque converter clutch installation.
Vernier calipers	Check torque converter clutch installation.
Dial indicator or dial indicator with magnetic base	Measure drive plate runout
Torque wrench	

LUBRICANT

Item	Capacity	Classification
Automatic transmission fluid Dry fill Drain and refill	 8.2 liters (8.7 US qts, 7.2 lmp. qts) 1.9 liters (2.0 US qts, 1.6 lmp. qts)	 ATF TYPE T–II or Equivalent

SSM (Special Service Materials)

08826–00090	Seal Packing 128 THREE BOND 1281 or equivalent (FIPG)	Oil pan

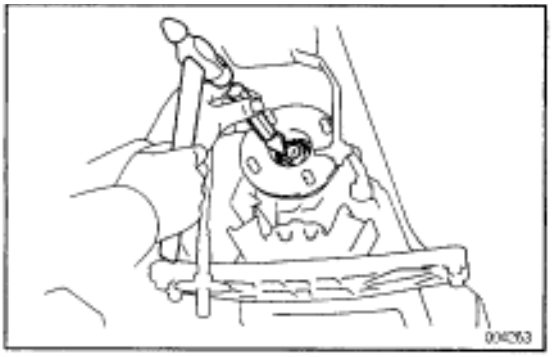

ON–VEHICLE REPAIR

EXTENSION HOUSING REAR OIL SEAL REPLACEMENT

1. DRAIN A/T FLUID

2. REMOVE FRONT EXHAUST PIPE AND HEAT INSULATOR (See page AT2–22)

3. REMOVE PROPELLER SHAFT (See page PR–7)

4. REMOVE TRANSMISSION OUTPUT FLANGE

(a) Using a hammer and chisel, loosen the staked part of the nut.
HINT: Shift the shift lever to the P position.

(b) Remove the nut.

(c) Tap the output flange with a plastic hammer to remove it and 2 washers.

(d) Using a screwdriver, remove the oil seal from the output flange.



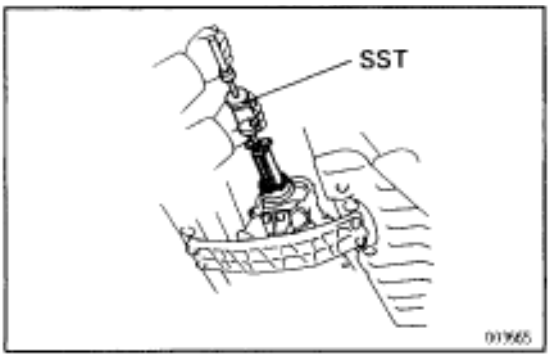

5. REMOVE EXTENSION HOUSING REAR OIL SEAL

Using SST, remove the oil seal.
SST 09308–00010

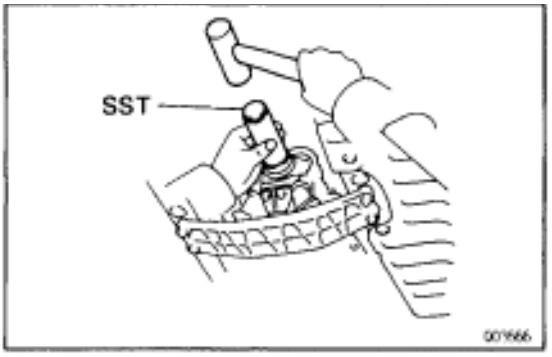

6. INSTALL EXTENSION HOUSING REAR OIL SEAL

(a) Coat the lip of a new oil seal with MP grease.

(b) Using SST and a hammer, drive in the oil seal with the lip facing downward.
SST 09309–37010
Oil seal depth from flat end:
0–0.3 mm (0–0.012 in.)

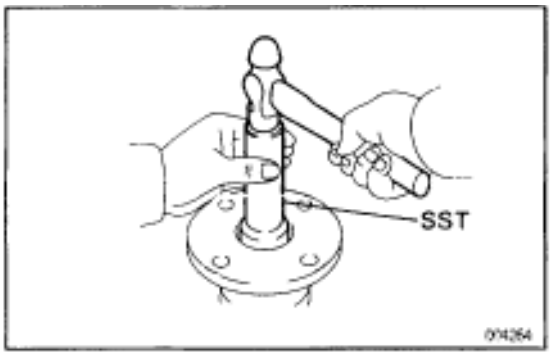

7. INSTALL TRANSMISSION OUTPUT FLANGE

(a) Using SST and a hammer, drive in a new oil seal.
SST 09517–36010

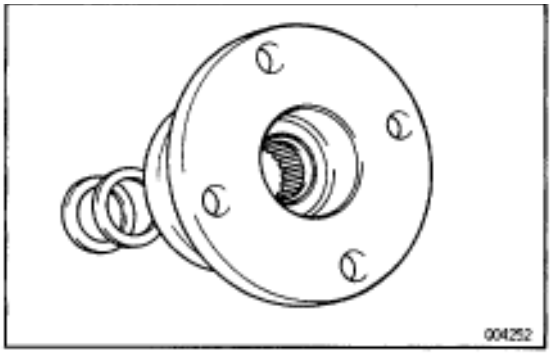

(b) Install the output flange and 2 washers.

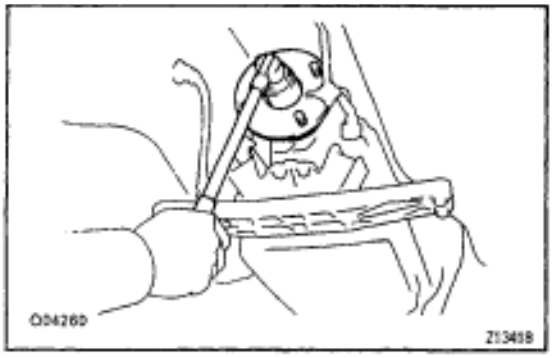

(c) Install and torque a new nut.
Torque: 123 N·m (1.250 kgf·cm, 90 ft·lbf)
HINT: Shift the shift lever to the P position

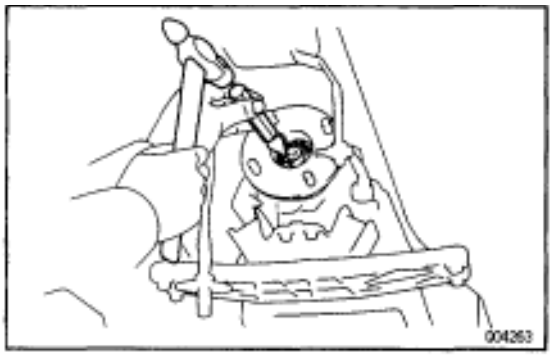

(d) Using a hammer and chisel, stake the nut.

8. INSTALL PROPELLER SHAFT
(See page PR–13)

9. INSTALL FRONT EXHAUST PIPE AND HEAT INSULATOR
(See page AT2–22)

10. FILL AND CHECK A/T FLUID (See page AT2–42)

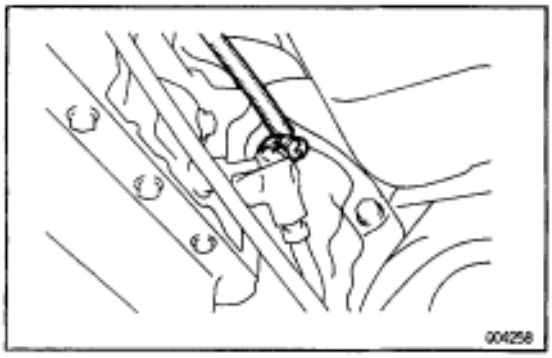

A/T FLUID TEMP. SENSOR REPLACEMENT

1. DISCONNECT A/T FLUID TEMP. SENSOR CONNECTOR

2. REMOVE A/T FLUID TEMP. SENSOR

(a) Remove the A/T fluid temp. sensor.

(b) Remove the O–ring from it.

3. INSTALL A/T FLUID TEMP. SENSOR

(a) Coat a new O–ring with A/T fluid and install it to the A/T fluid temp. sensor

(b) Install the A/T fluid temp. sensor.
Torque: 15 N·m (150 kgf·cm, 11 ft·lbf)

4. CONNECT A/T FLUID TEMP. SENSOR CONNECTOR

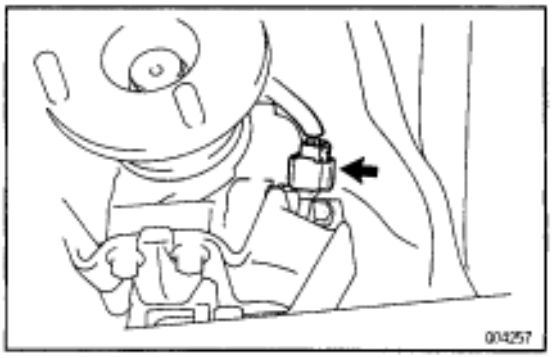

NO.1 VEHICLE SPEED SENSOR ASSEMBLY REPLACEMENT

1. DISCONNECT NO.1 VEHICLE SPEED SENSOR CONNECTOR

2. REMOVE NO.1 VEHICLE SPEED SENSOR ASSEMBLY

(a) Remove the bolt and No.1 vehicle speed sensor assembly.

(b) Remove the speedometer driven gear from the No.1 speed sensor.

(c) Remove the O–ring from the No.1 vehicle speed sensor.

3. INSTALL NO.1 VEHICLE SPEED SENSOR ASSEMBLY

(a) Coat a new O–ring with A/T fluid and install it to the No.1 vehicle speed sensor.

(b) Install the speedometer driven gear to the No.1 vehicle speed sensor.

(c) Install the No.1 vehicle speed sensor to the extension housing and torque the bolt.

Torque: 16 N·m (160 kgf·cm, 12 ft·lbf)

4. CONNECT NO.1 VEHICLE SPEED SENSOR CONNECTOR

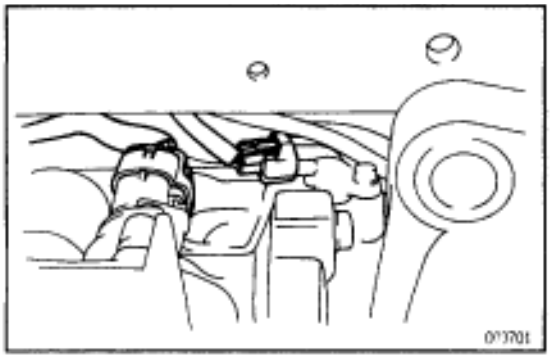

NO.2 VEHICLE SPEED SENSOR REPLACEMENT

1. DISCONNECT NO.2 VEHICLE SPEED SENSOR CONNECTOR

2. REMOVE NO.2 VEHICLE SPEED SENSOR

(a) Remove the bolt and No.2 vehicle speed sensor.

(b) Remove the O–ring.

3. INSTALL NO.2 VEHICLE SPEED SENSOR

(a) Coat a new O–ring with A/T fluid and install it to the No.2 vehicle speed sensor.

(b) Install the No.2 vehicle speed sensor to the extension housing and torque the bolt.

Torque: 5.4 N·m (55 kgf·cm, 48 in.·lbf)

4. CONNECT NO.2 VEHICLE SPEED SENSOR CONNECTOR

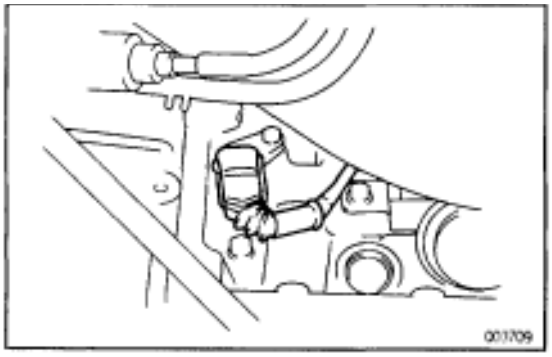

O/D DIRECT CLUTCH SPEED SENSOR REPLACEMENT

1. **DISCONNECT O/D DIRECT CLUTCH SPEED SENSOR CONNECTOR**
2. **REMOVE O/D DIRECT CLUTCH SPEED SENSOR**

(a) Remove the bolt and O/D direct clutch speed sensor.
(b) Remove the O–ring.

3. **INSTALL O/D DIRECT CLUTCH SPEED SENSOR**

(a) Coat a new O–ring with A/T fluid and install it to the O/D direct clutch speed sensor.
(b) Install the O/D direct clutch speed sensor to the transmission case and torque the bolt.
Torque: 5.4 N·m (55 kgf·cm, 48 in.·lbf)

4. **CONNECT O/D DIRECT CLUTCH SPEED SENSOR CONNECTOR**

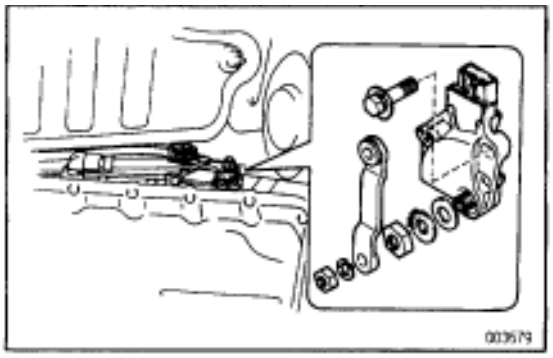

PARK/NEUTRAL POSITION SWITCH REPLACEMENT

1. **REMOVE FRONT EXHAUST PIPE**
(See page AT2–22)
2. **DISCONNECT PARK/NEUTRAL POSITION SWITCH CONNECTOR**
3. **REMOVE PARK/NEUTRAL POSITION SWITCH**

(a) Remove the control shaft lever.
(b) Pry off the lock washer and remove the nut.
(c) Remove the bolt and pull out the park/neutral position switch.

4. **INSTALL AND ADJUST PARK/NEUTRAL POSITION SWITCH**
5. **CONNECT PARK/NEUTRAL POSITION SWITCH CONNECTOR**
6. **INSTALL FRONT EXHAUST PIPE**
(See page AT2–22)

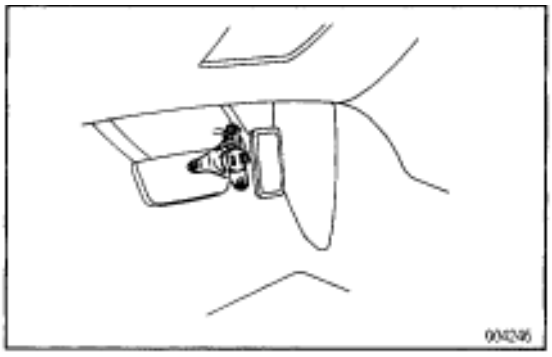

KICK–DOWN SWITCH REPLACEMENT

1. **REMOVE KICK–DOWN SWITCH**

(a) Remove the 3 bolts and kick–down switch.
(b) Disconnect the kick–down switch connector.

2. **INSTALL KICK–DOWN SWITCH**

(a) Connect the kick–down switch connector.
(b) Install the kick–down switch and 3 bolts.

VALVE BODY REMOVAL

Installation is in the reverse order of removal.

INSTALLATION HINT: After installation, fill A/T fluid and check fluid level. (See page AT2–42)

1. **DRAIN A/T FLUID**
2. **REMOVE EXHAUST PIPE**
   (See page AT2–22)

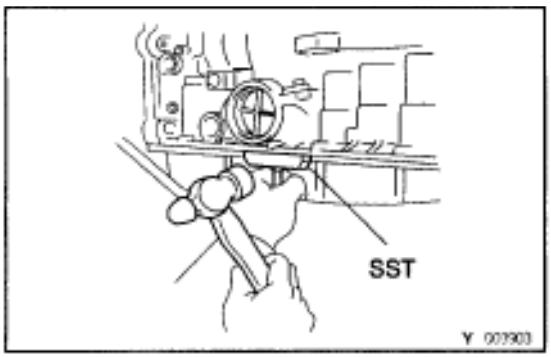

3. **REMOVE OIL PAN**

(a) Remove the 19 bolts.
Torque: 7.4 N·m (75 kgf·cm, 85 in.·lbf)

(b) Install the blade of SST between the transmission case and oil pan, cut off applied sealer.
SST 09032–00100
REMOVAL NOTICE: Be careful not to damage the oil pan flange.

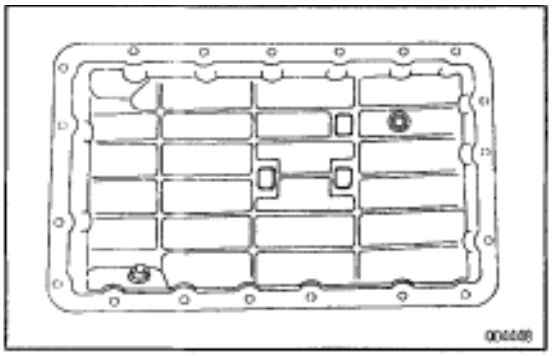

4. **EXAMINE PARTICLES IN PAN**

Remove the magnets and use them to collect steel particles. Carefully look at the foreign matter and particles in the pan and on the magnets to anticipate the type of wear you will find in the transmission:

Steel (magnetic)
bearing, gear and clutch plate wear

Brass (non–magnetic)
bushing wear

INSTALLATION HINT:

- Install the 3 magnets in the indentations of the oil pan, as shown in the illustration.

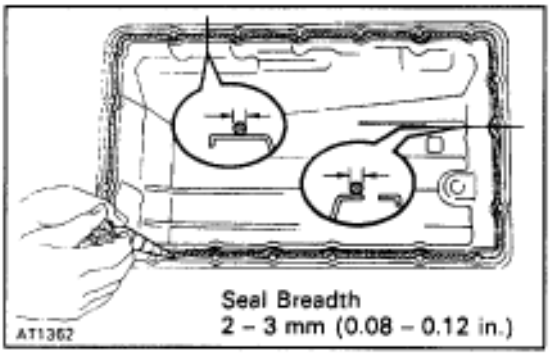

- Remove any packing material and be careful not to drop oil on the contacting surfaces of the transmission case and oil pan.
- Apply FIPG to the oil pan, as shown in the illustration.

FIPG
Part No.08826–00090, THREE BOND 1281 or equivalent

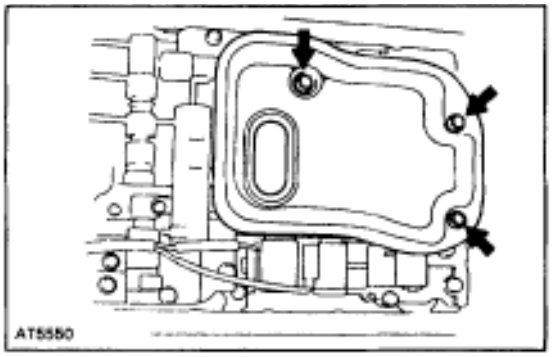

5. REMOVAL OIL STRAINER

Remove the 3 bolts holding the oil strainer to the valve body.

Torque: 10 N·m (100 kgf·cm, 7 ft·lbf)

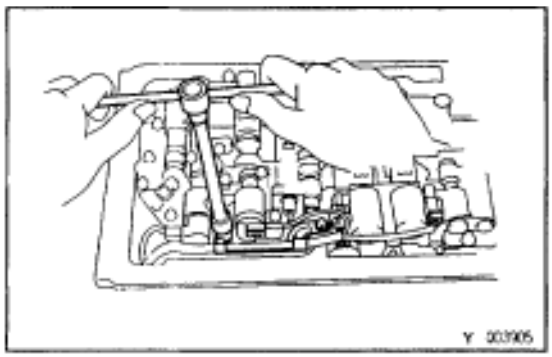

6. REMOVE SOLENOID WIRING

(a) Remove the 2 bolts and clamp.

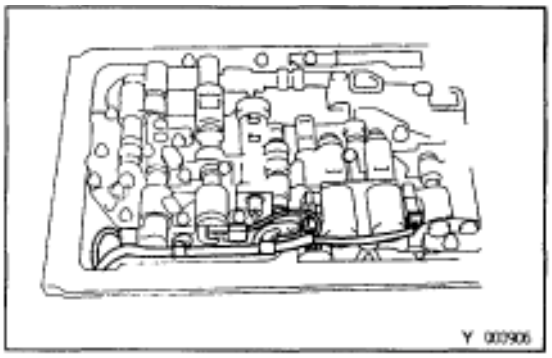

(b) Disconnect the 5 connectors from the solenoid valves.

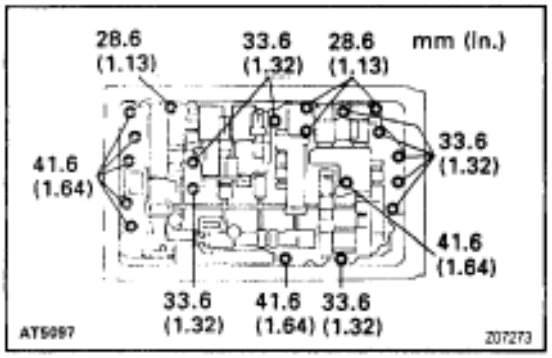

7. REMOVE VALVE BODY

(a) Remove the 20 bolts.

Torque: 10 N·m (100 kgf·cm, 7 ft·lbf)

INSTALLATION HINT: Each bolt length is indicated in the illustration.

(b) Remove the valve body.

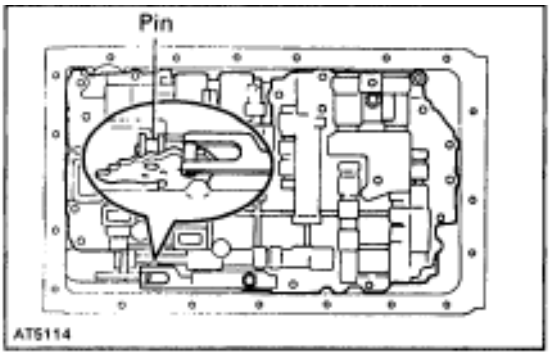

INSTALLATION HINT: Align the groove of the manual valve to the pin of the lever.

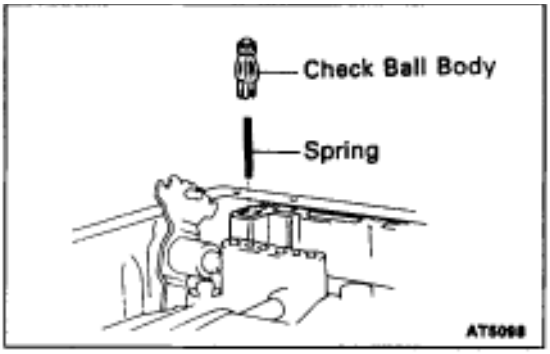

REMOVAL NOTICE: Do not drop the check ball body and spring.

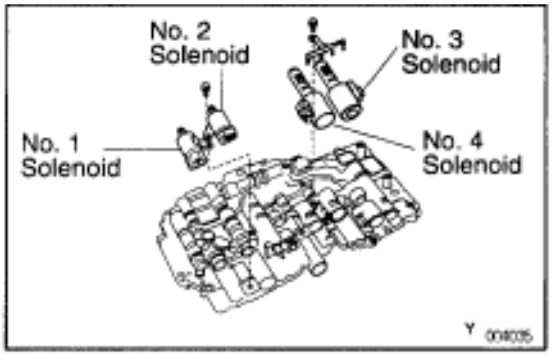

8. REMOVE 5 SOLENOID VALVES

(a) Remove the No.1, No.2 solenoid valves.

(b) Remove the O–ring from the No.1 and No.2 solenoid valves.
INSTALLATION HINT: Replace the O–rings with new ones.

(c) Remove the lock plate, No.3 and No.4 solenoid valves.

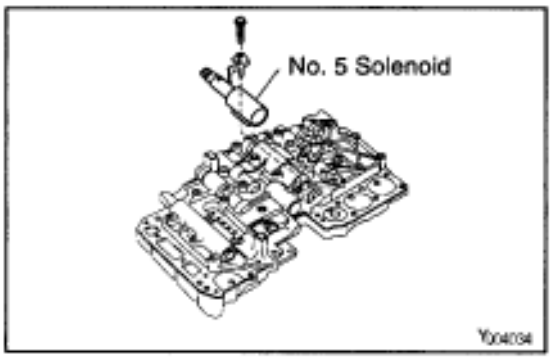

(d) Remove the No.5 solenoid valve.

9. INSPECT VALVE BODY

Refer to A 340 E Automatic Transmission Repair Manual.

ASSEMBLY REMOVAL AND INSTALLATION

COMPONENTS

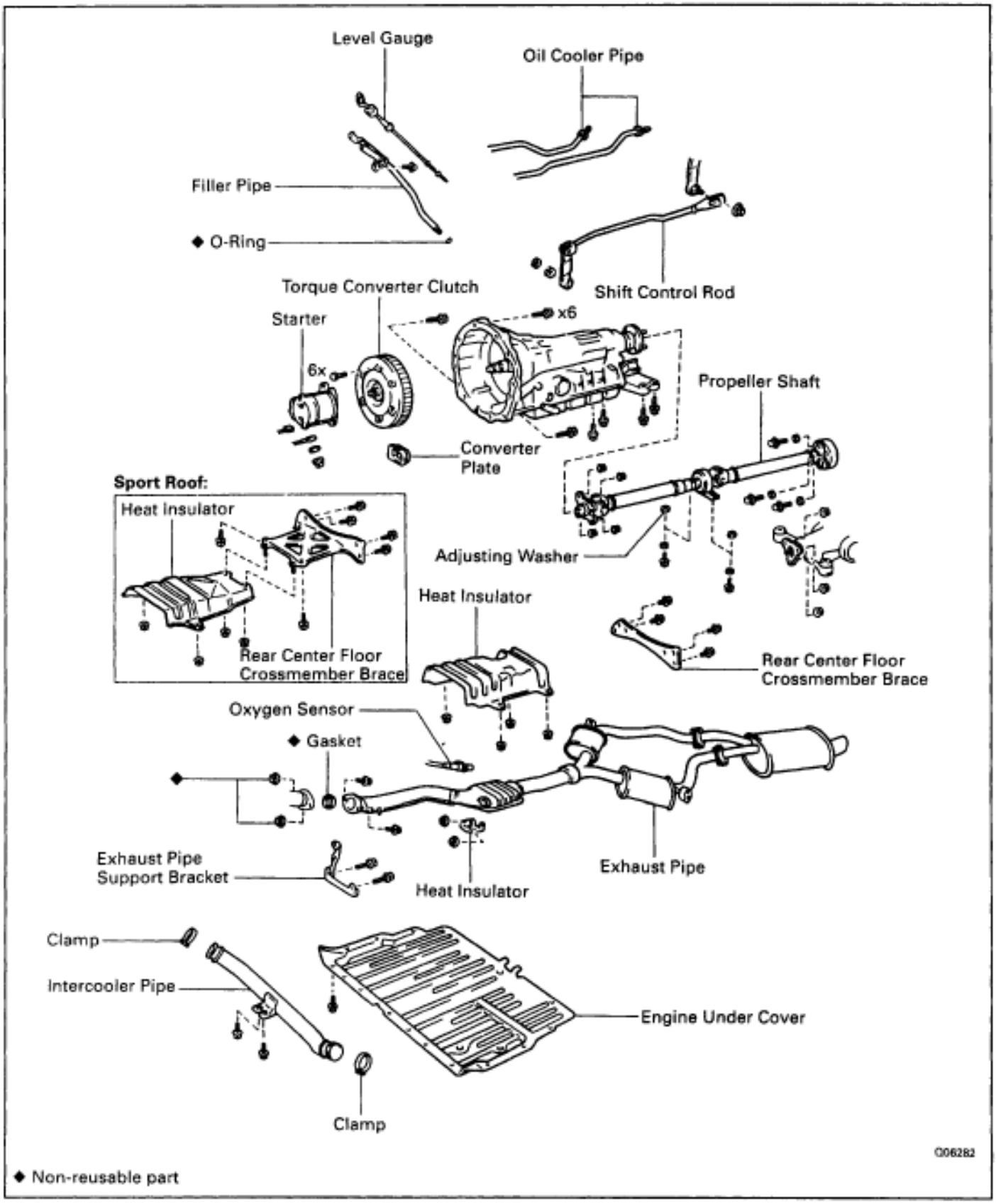

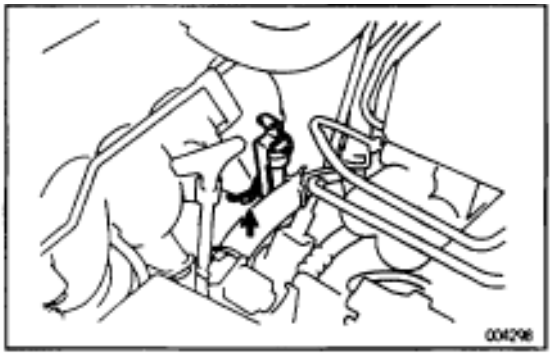

TRANSMISSION REMOVAL

Installation is in the reverse order of removal.

INSTALLATION HINT: After installation, fill A/T fluid and check fluid level. (See page AT2–42)

1. REMOVE LEVEL GAUGE

2. REMOVE FILLER PIPE

Remove the bolt and filler pipe.

3. REMOVE ENGINE UNDER COVER

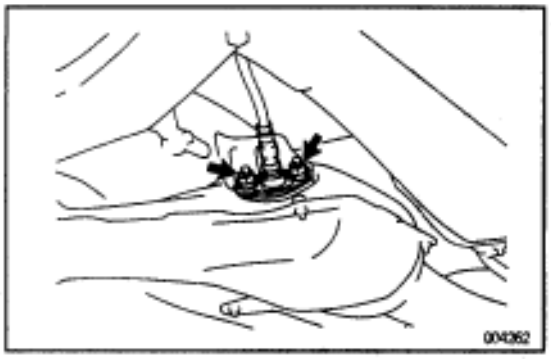

4. DISCONNECT OXYGEN SENSOR

(a) Remove the 2 nuts.

(b) Remove the cover and the sensor.

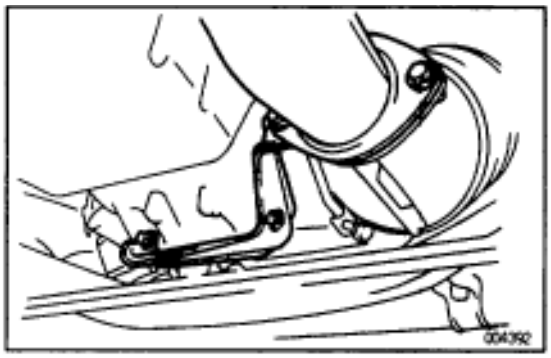

5. REMOVE EXHAUST PIPE

(a) Remove the 2 nuts and 4 bolts.

(b) Disconnect the rings from the exhaust pipe brackets.

(c) Remove the exhaust pipe, gasket and bracket.

Torque:

Bracket X Transmission housing:
37 N·m (380 kgf·cm, 27 ft·lbf)
No.2 exhaust pipe X Center exhaust pipe:
58 N·m (590 kgf·cm, 43 ft·lbf)

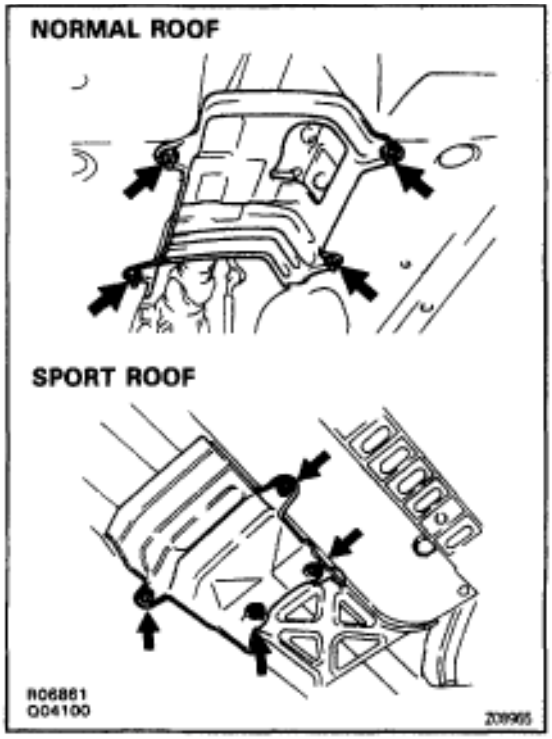

6. REMOVE HEAT INSULATOR

Torque: 5.4 N·m (55 kgf·cm, 48 in.·lbf)

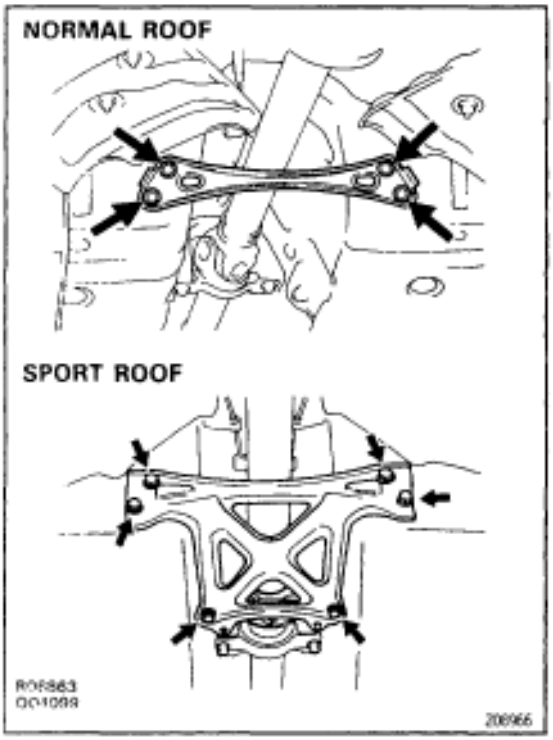

7. REMOVE REAR CENTER FLOOR CROSSMEMBER BRACE

Torque: 13 N·m (130 kgf·cm, 9 ft·lbf)

8. REMOVE PROPELLER SHAFT

(See page PR–7)



9. DISCONNECT SHIFT CONTROL ROD FROM SHIFT LEVER

Torque: 13 N·m (130 kgf·cm, 9 ft·lbf)

INSTALLATION HINT: Inspect and adjust the park/ neutral position switch. (See page AT2–43)

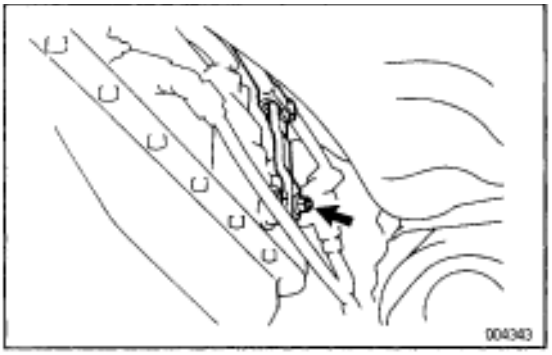

10. REMOVE SHIFT CONTROL ROD FROM PARK/NEUTRAL POSITION SWITCH

Torque: 16 N·m (160 kgf·cm, 12 ft·lbf)

11. DISCONNECT THESE CONNECTORS:

- O/D direct clutch speed sensor
- No.1 vehicle speed sensor
- No.2 vehicle speed sensor
- Solenoid wire
- Park/neutral position switch
- A/T fluid temp. sensor

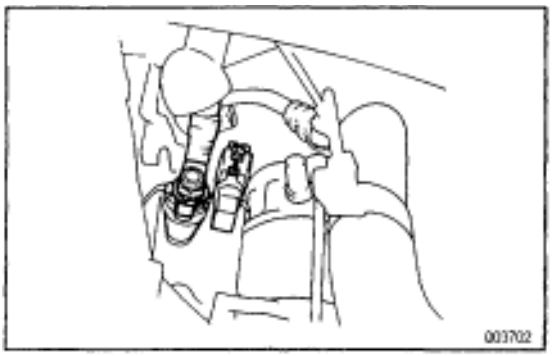

12. DISCONNECT CONNECTORS AND CABLE FROM STARTER

(a) Remove the nut and disconnect the wire harness.

(b) Disconnect the connectors.

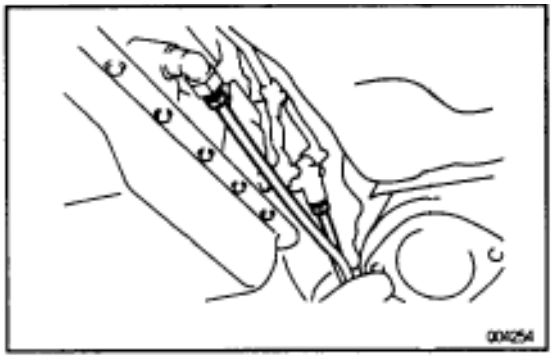

13. REMOVE OIL COOLER PIPES

(a) Loosen the 2 oil cooler union nuts.

INSTALLATION HINT:

- Place the 2 oil cooler pipes at installation position.
- Tighten the 2 oil cooler union nuts to the transmission.

Torque: 34 N·m (350 kgf·cm, 25 ft·lbf)

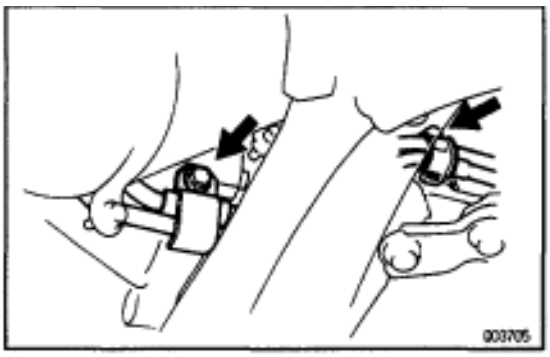

(b) Remove the center and rear oil cooler pipe brackets.
Torque: 10 N·m (100 kgf·cm, 7 ft·lbf)

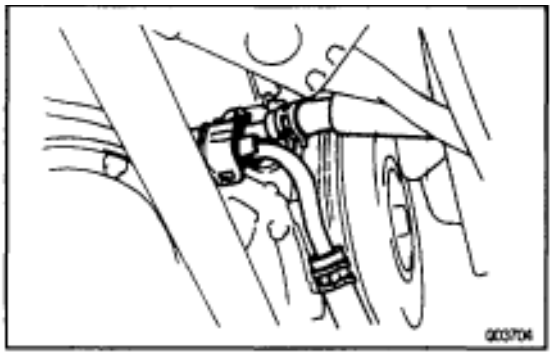

(c) Remove the front oil cooler pipe bracket.
Torque: 10 N·m (100 kgf·cm, 7 ft·lbf)

(d) Disconnect the 2 oil cooler pipes.

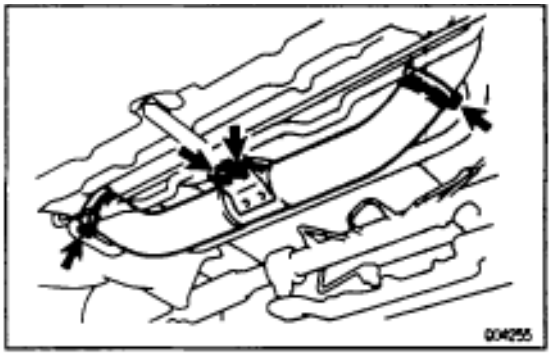

14. REMOVE INTERCOOLER PIPE

(a) Remove the 2 bolts.

(b) Loosen the 2 clamps.

(c) Remove the pipe.

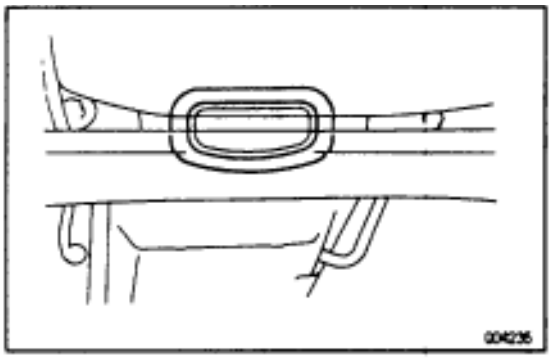

15. REMOVE TORQUE CONVERTER CLUTCH MOUNTING BOLTS

(a) Remove the converter plate.

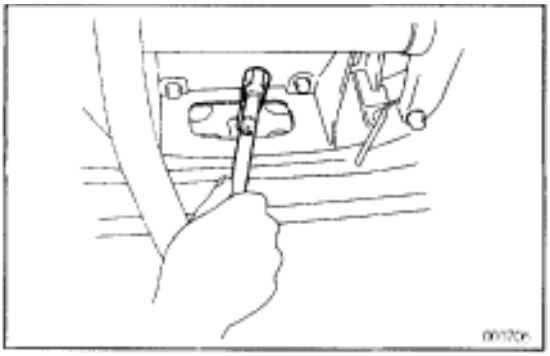

(b) Turn the crankshaft to gain access and remove the 6 bolts.
Torque: 33 N·m (340 kgf·cm, 25 ft·lbf)

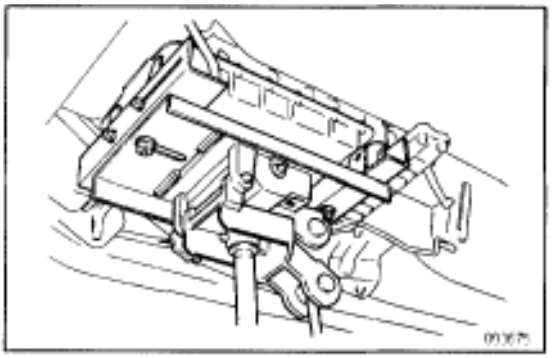

16. SET TRANSMISSION JACK

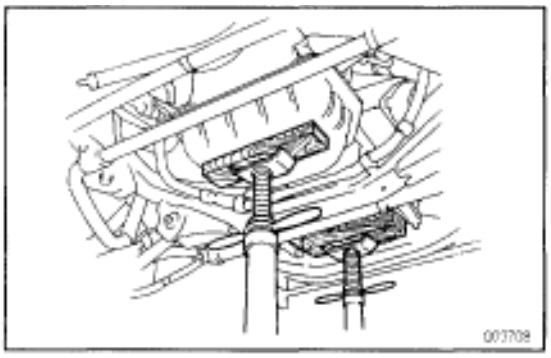

17. SUPPORT ENGINE
NOTICE: Use a wooden block so not to damage the engine oil pan.

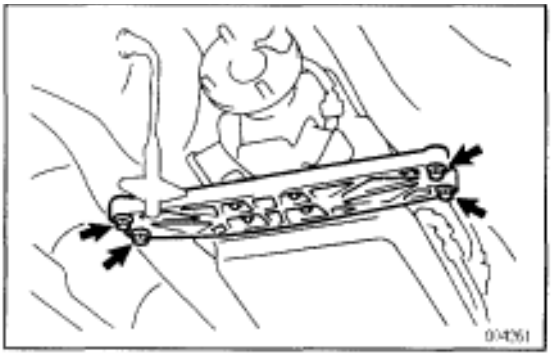

18. REMOVE TRANSMISSION REAR SUPPORT
Torque: 25 N·m (250 kgf·cm, 19 ft·lbf)

19. REMOVE 4 WIRE HARNESS CLAMPS
Lower the transmission and remove the 4 wire harness clamps from the retainer.

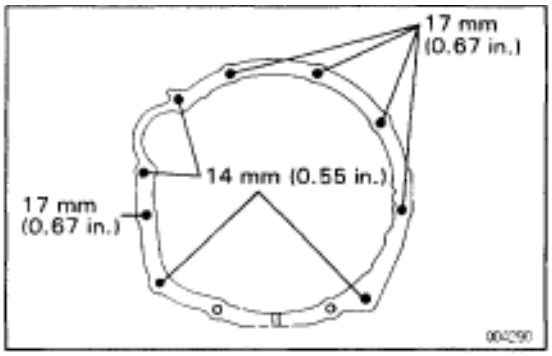

20. REMOVE STARTER AND TRANSMISSION SET BOLTS
Torque:
17 mm head bolt:
72 N·m (730 kgf·cm, 53 ft·lbf)
14 mm head bolt:
37 N·m (380 kgf·cm, 27 ft·lbf)

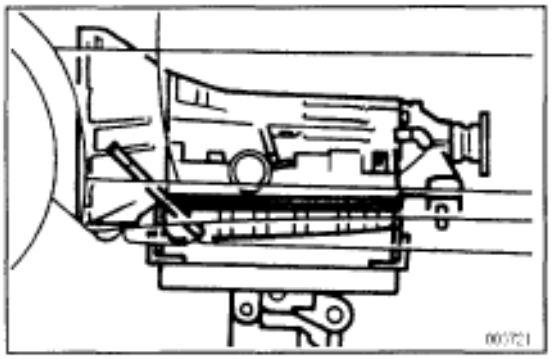

21. REMOVE TRANSMISSION FROM ENGINE

INSTALLATION HINT:

- Jack up and push the transmission fully into position.
- Make sure the engine and transmission are aligned precisely.
- Adjust the angle of the engine and transmission so that the engine installation surface and transmission surfaces are parallel.

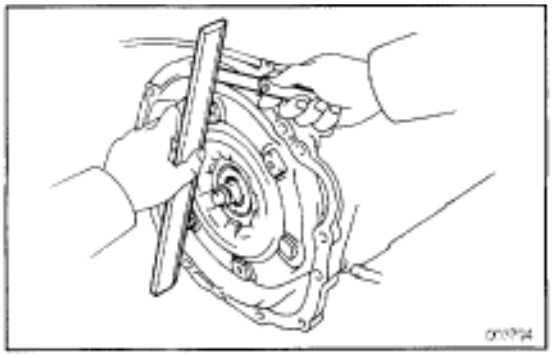

TORQUE CONVERTER CLUTCH INSTALLATION

1. INSTALL TORQUE CONVERTER CLUTCH IN TRANSMISSION

2. CHECK TORQUE CONVERTER CLUTCH INSTALLATION

Using calipers and a straight edge, measure between the installed surface of the transmission and the straight edge.

Clearance:

Less than 0.1 mm (0.004 in.)

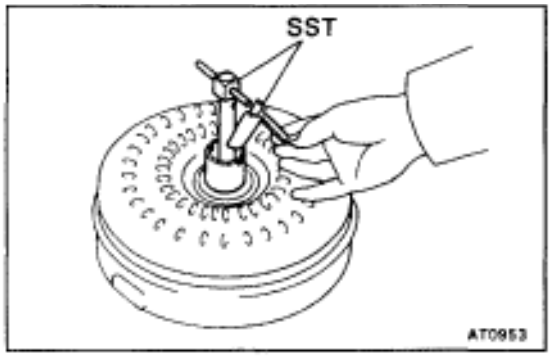

TORQUE CONVERTER CLUTCH AND DRIVE PLATE INSPECTION

1. INSPECT ONE–WAY CLUTCH

(a) Install SST into the inner race of the one–way clutch.
SST 09350–30020 (09351–32010)

(b) Install SST so that is fits in the notch of the converter clutch hub and outer race of the one–way clutch.
SST 09350–30020 (09351–32020)

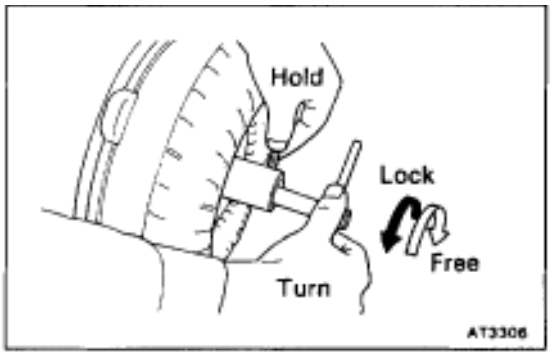

(c) With the torque converter clutch standing on its side, the clutch locks when turned counterclockwise, and rotates freely and smoothly clockwise.
If necessary, clean the converter clutch and retest the clutch. Replace the converter clutch if the clutch still fails the test.

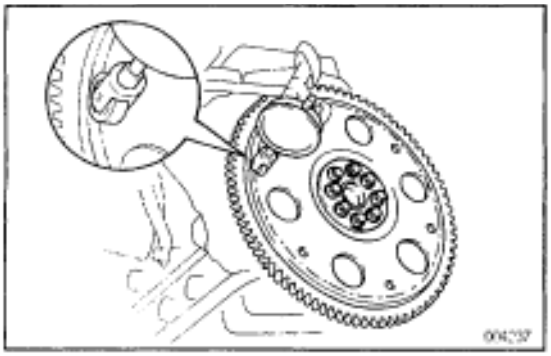

2. MEASURE DRIVE PLATE RUNOUT AND INSPECT RING GEAR

Set up a dial indicator and measure the drive plate runout.

Maximum runout:

0.20 mm (0.0079 in.)

If runout exceeds 0.20 mm (0.0079 in.) or if the ring gear is damaged replace the drive plate. If installing a new drive plate, note the orientation of spacers and tighten the bolts.

Torque: 64 N·m (650 kgf·cm, 47 ft·lbf)

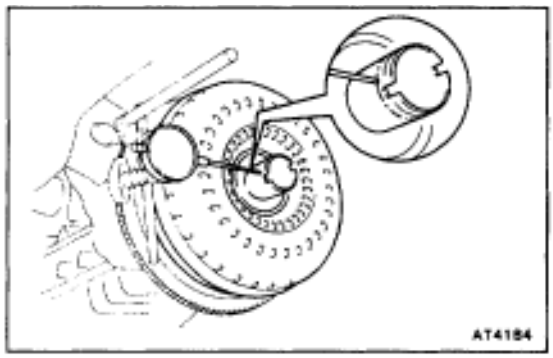

3. MEASURE TORQUE CONVERTER CLUTCH SLEEVE RUNOUT

(a) Temporarily mount the torque converter clutch to the drive plate. Set up a dial indicator.

Maximum runout:

0.30 mm (0.0118 in.)

If runout exceeds 0.30 mm (0.0118 in.), try to correct by reorienting the installation of the converter clutch.

If excessive runout cannot be corrected, replace the torque converter clutch.

HINT: Mark the position of the converter clutch to ensure correct installation.

(b) Remove the torque converter clutch.

SHIFT LOCK SYSTEM

COMPONENT PARTS LOCATION

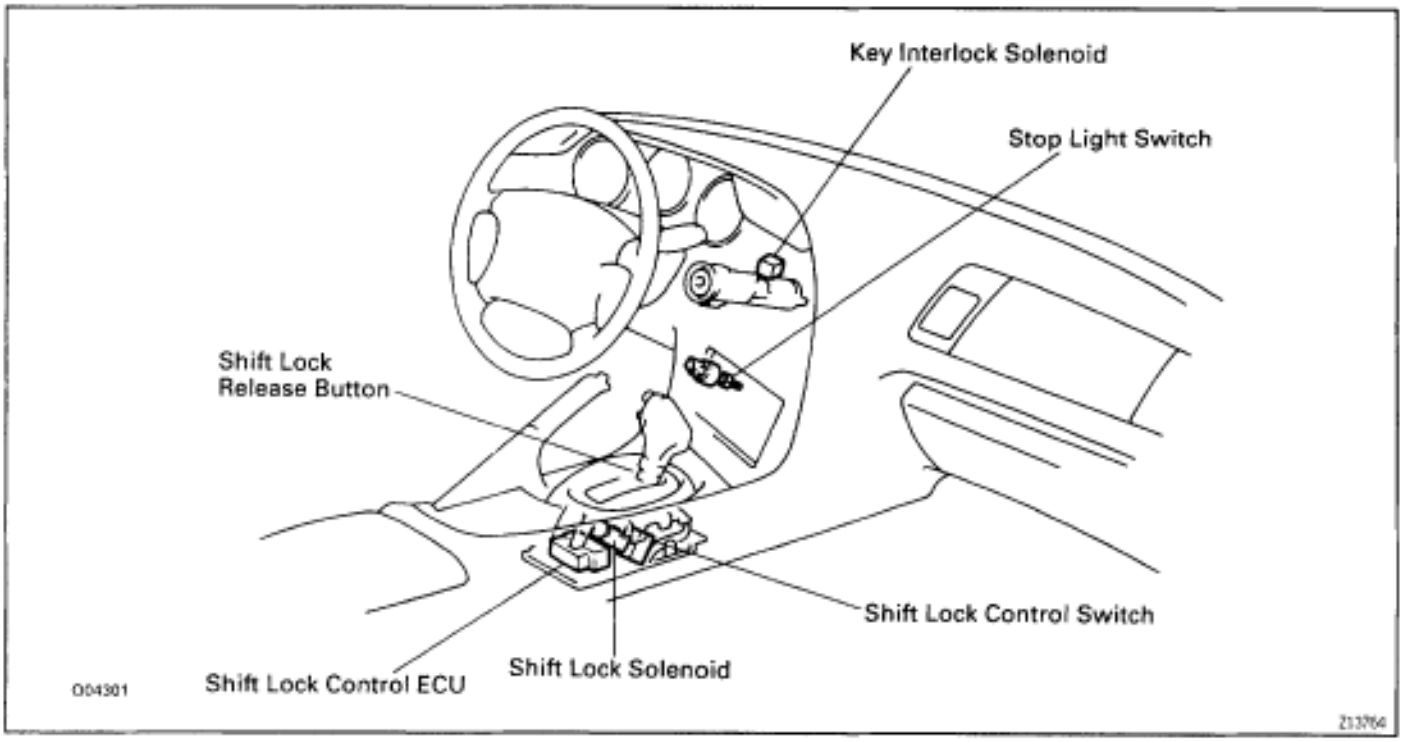

WIRING DIAGRAM

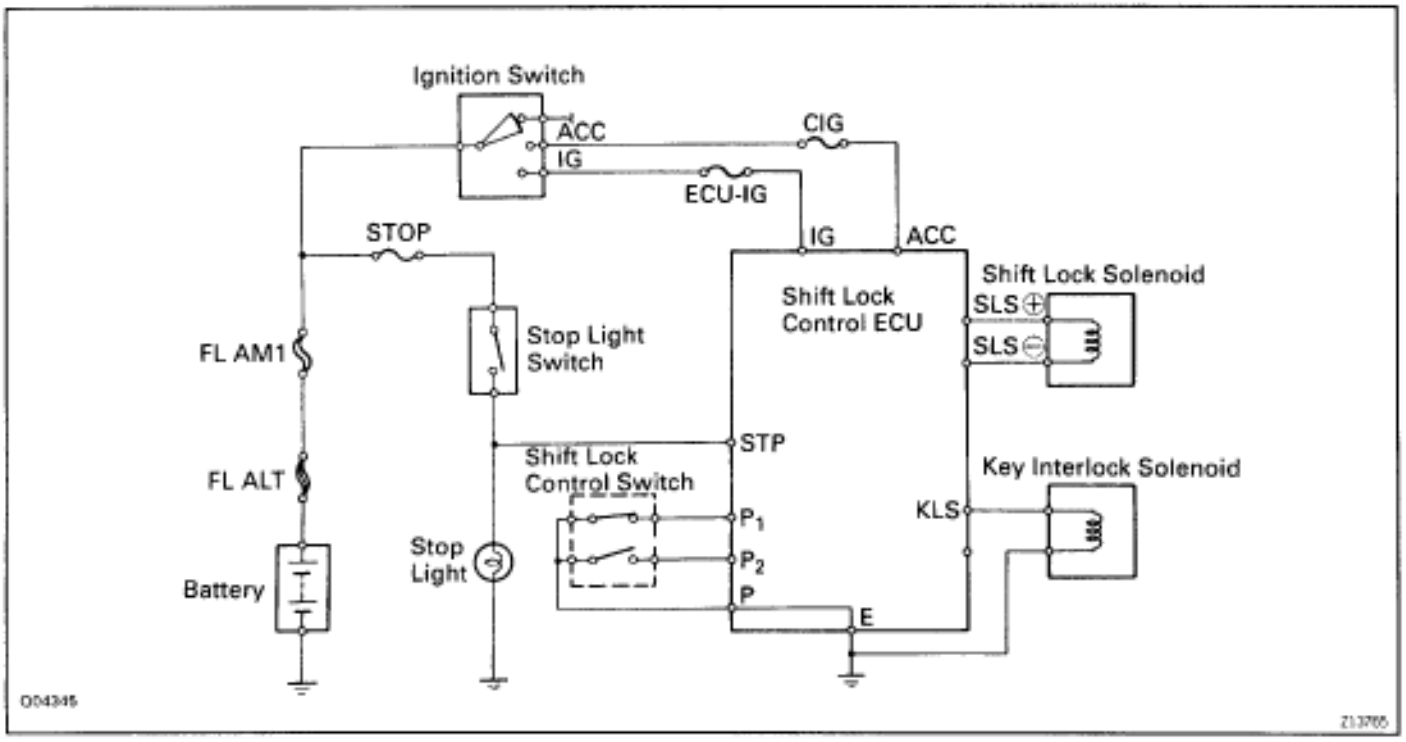

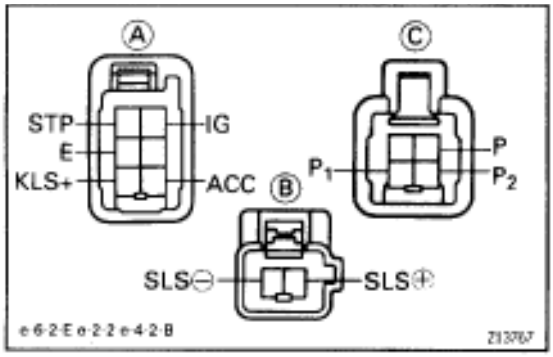

ELECTRIC CONTROL COMPONENTS INSPECTION

1. INSPECT SHIFT LOCK CONTROL ECU

Using a voltmeter, measure the voltage at each terminal.

Connector	Terminal	Measuring condition	Voltage (v)
A	ACC – E	IG SW ACC	10 – 14
	IG – E	IG SW ON	10 – 14
	STP – E	Depress brake pedal	10 – 14
	KLS – E	(1) IG SW ACC and P position	0
		(2) R, N, D, 2, L position	7.5 – 11
		(3) R, N, D, 2, L position (after one second)	6 – 9.5
B	SLS(+) – SLS(–)	(1) IG SW ON and P position	0
		(2) Depress brake pedal	8 – 13.5
		(3) Depress brake pedal (after 20 seconds)	6 – 8.5
		(4) R,N,D,2,L position	0
C	P_1 – P	(1) IG SW ON, P position and depress brake pedal	0
		(2) R,N,D,2,L position	9 – 13.5
	P_2 – P	(1) IG SW ACC and P position	9 – 13.5
		(2) R,N,D,2,L position	0

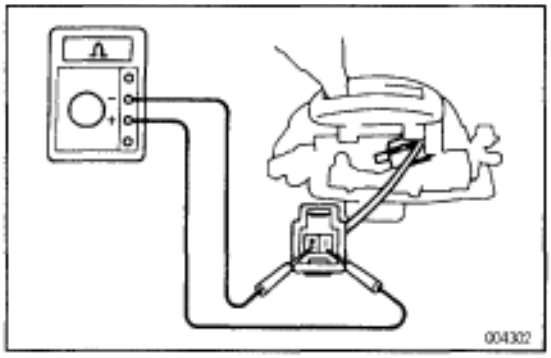

2. INSPECT SHIFT LOCK SOLENOID

(a) Disconnect the solenoid connector.

(b) Using an ohmmeter, measure the resistance between terminals 1 and 2.

Standard resistance:

20–28

If resistance value is not as specified, replace the solenoid.

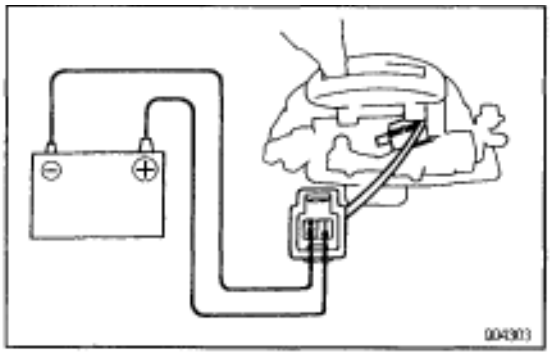

(c) Apply the battery positive voltage between terminals 1 and 2. At this time, confirm that the solenoid operates.

If the solenoid does not operated, replace the solenoid.

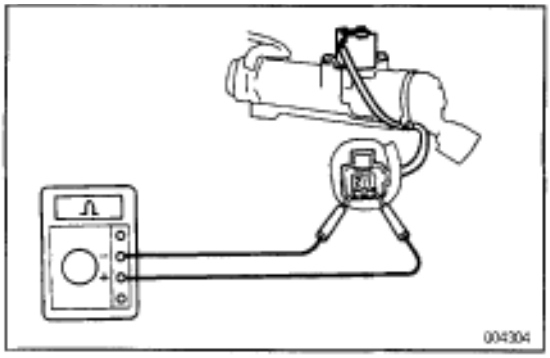

3. INSPECT KEY INTERLOCK SOLENOID

(a) Disconnect the solenoid connector.

(b) Using an ohmmeter, measure the resistance between terminals 1 and 2.

Standard resistance:

12–17

If resistance value is not as specified, replace the solenoid.

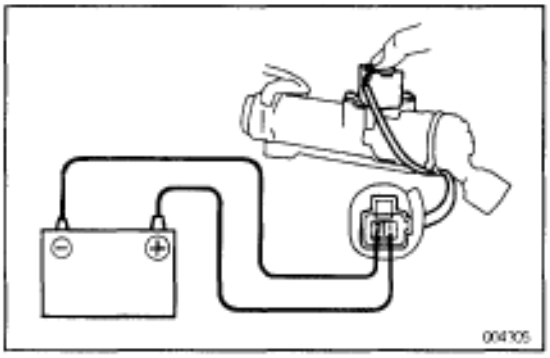

(c) Touch the solenoid with your finger and check that solenoid operation can be felt when battery positive voltage is applied intermittently to the terminals 1 and 2.

If the solenoid does not operate, replace the solenoid.

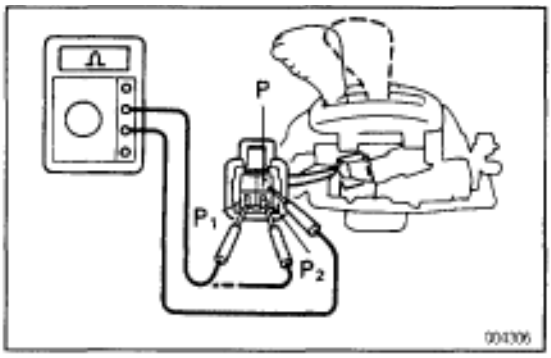

4. INSPECT SHIFT LOCK CONTROL SWITCH

Inspect that there is continuity between each terminal.

Shift position	Tester condition to terminal number	Specified value
P position (Release button is not pushed)	$P–P_1$	Continuity
R, N, D, 2, L position	$P–P_2$	Continuity

TROUBLESHOOTING

HOW TO PROCEED WITH TROUBLESHOOTING

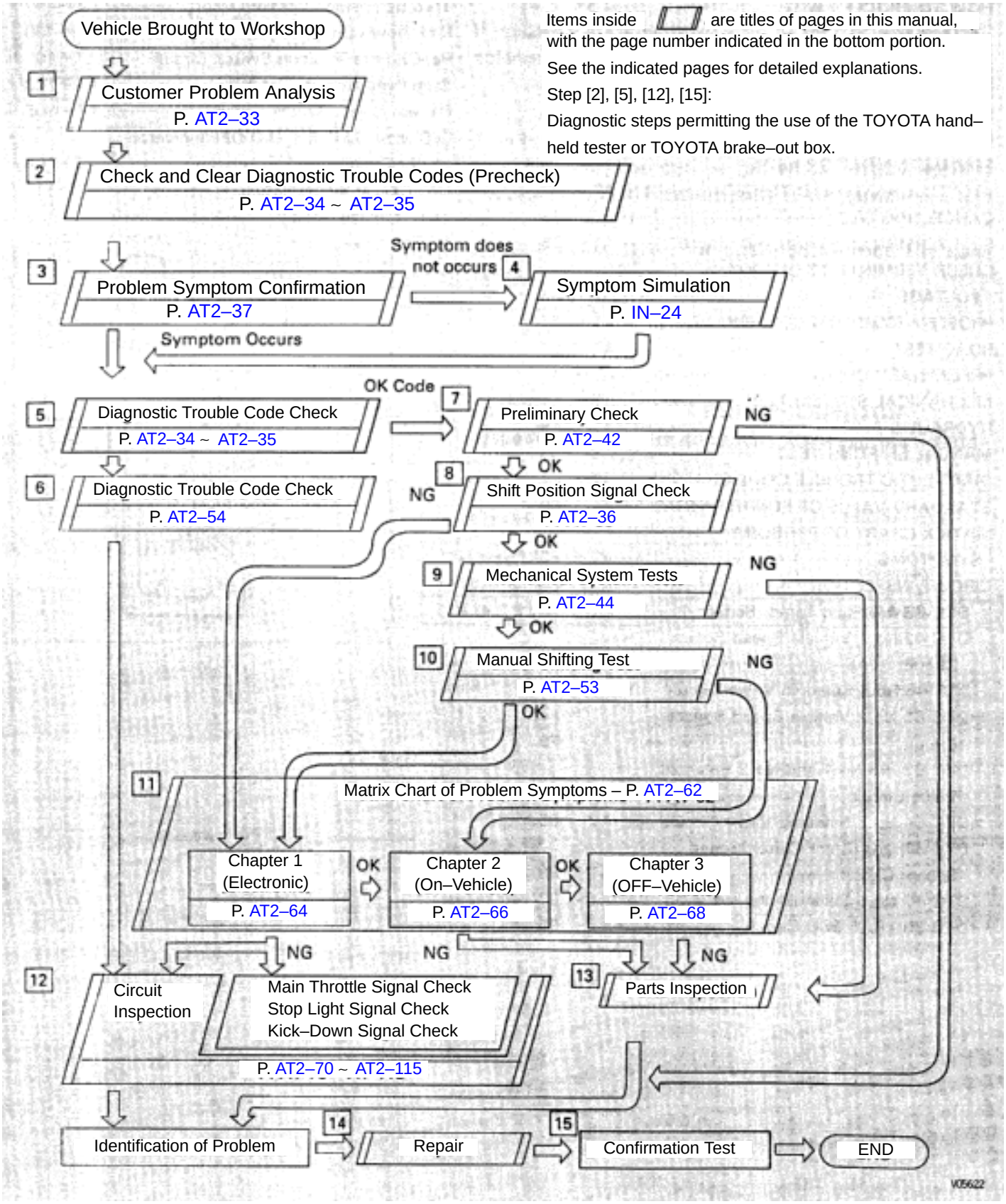

CUSTOMER PROBLEM ANALYSIS

Electronically Controlled Transmission Check Sheet

Inspector's Name:

Customer's Name		**Registration No.**	
		Registration Year	/ /
		Frame No.	
Date Vehicle Brought In	/ /	**Odometer Reading**	km Miles

Date Problem Occurred	/ /
How often Does Problem Occur?	☐ Continuous ☐ Intermittent (times a day)

Symptoms	☐ Vehicle does not move. (☐ Any position ☐ Particular position)
	☐ No up–shift (☐ 1st → 2nd ☐ 2nd → 3rd ☐ 3rd → O/D)
	☐ No down–shift (☐ O/D → 3rd ☐ 3nd → 2rd ☐ 2rd → 1st)
	☐ Lock–up malfuction
	☐ Shift point too high or too low.
	☐ Harsh engagement (☐ N → D ☐ Lock–up ☐ Any drive position)
	☐ Slip or shudder
	☐ No Kick–down
	☐ No pattern select
	☐ Others ( )

Check Item	**Malfunction Indicator Lamp**	☐ Normal	☐ Remains ON

Diagnostic Trouble Code (O/D OFF Indicator LIght)	1st Time	☐ Normal Code	☐ Malfunction Code (Code)
	2nd Time	☐ Normal Code	☐ Malfunction Code (Code)

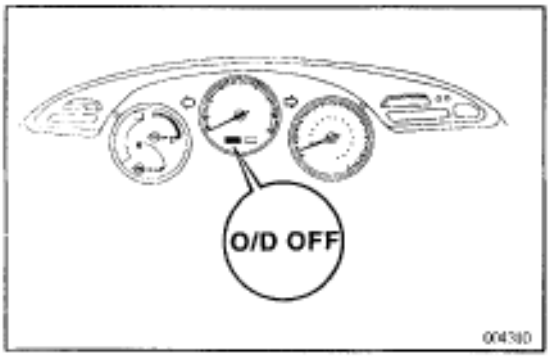

DIAGNOSIS SYSTEM

The automatic transmission has built–in self–diagnostic functions. If a malfunction occurs in the system, the ECM stores the diagnostic trouble code in memory and the O/D OFF (Overdrive OFF) indicator light blinks to inform the driver. The diagnostic trouble code stored in memory can be read out by the following procedure.

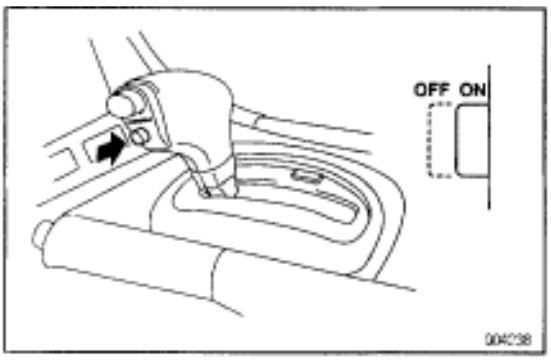

O/D OFF INDICATOR LIGHT INSPECTION

1. Turn the ignition switch ON.
2. Check if the O/D OFF indicator light lights up when the O/D main switch is pushed out to OFF and goes off when the O/D main switch is pushed in to ON.
   HINT: If the O/D OFF indicator light does not light up or stay on all the time, carry out the check for ”O/D OFF Indicator Light Circuit” on page AT2–108.

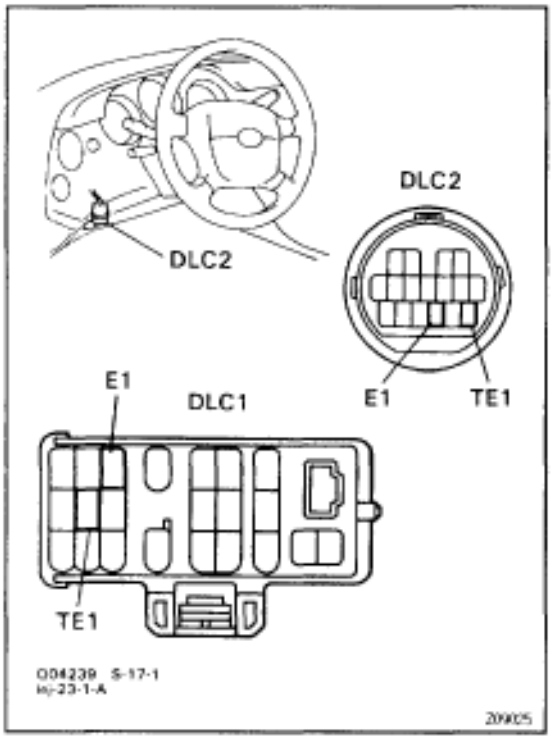

DIAGNOSTIC TROUBLE CODE CHECK

1. Turn the ignition switch ON, but do not start the engine.
2. Push in the O/D main switch to ON.
   HINT: Warning and diagnostic trouble codes can be read only when the O/D main switch is ON. If it is OFF, the O/D OFF indicator light up will light continuously and will not blink.
3. Using SST, connect terminals TE1 and E1 of the DLC 1 or DLC2.
   SST 09843–18020

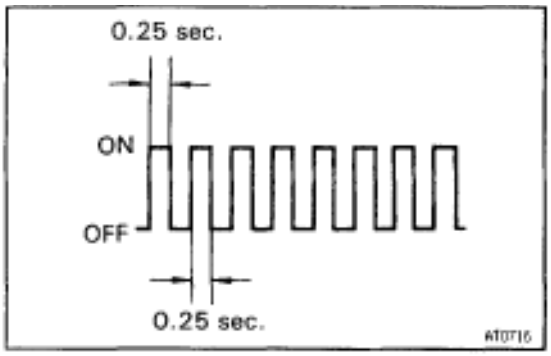

4. Read the diagnostic trouble code indicated by the number of times the O/D OFF indicator light blinks
   (See next page).
   HINT: If the system is operating normally, the light will blink 2 times per second.

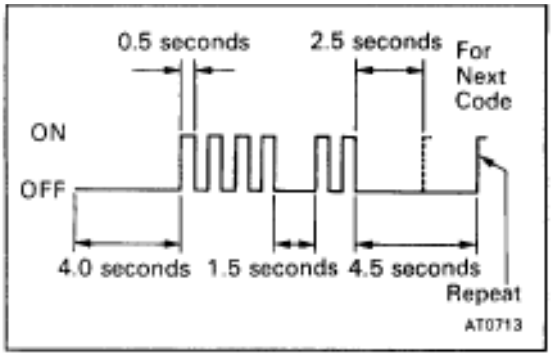

The trouble code is indicated as shown in the illustration at left (Diagnostic trouble code ”42” is shown as an example).
HINT: When 2 or more trouble codes are stored in memory, the lower–numbered code is displayed first.
If no diagnostic trouble code is output, or if a diagnostic trouble code is output even though no diagnostic trouble code output operation is performed, check the TE1 terminal circuit on page AT2–113

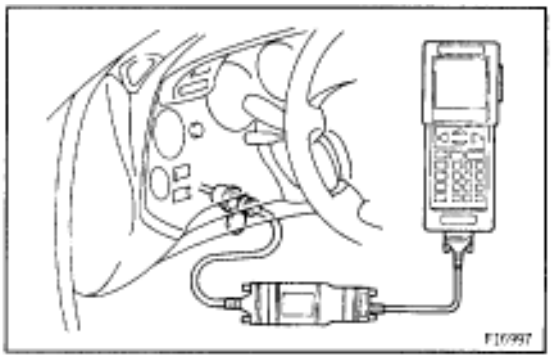

ECM DATA MONITOR USING TOYOTA HAND–HELD TESTER

1. Hook up the TOYOTA hand–held tester to the DLC2.
2. Monitor the ECM data by following the prompts on the tester screen.
   HINT: TOYOTA hand–held tester has a ”Snapshot” function which records the monitored data.
   Please refer to the TOYOTA hand–held tester operator’s manual.

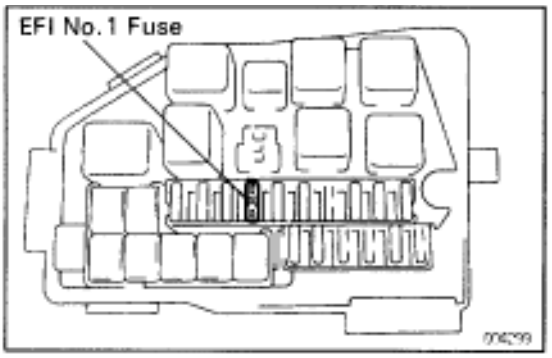

CANCELING DIAGNOSTIC TROUBLE CODE

After repair of the trouble area, the diagnostic trouble code retained in the ECM memory must be canceled out by removing the EFI No.1 fuse for 10 seconds or more, with the ignition switch OFF.
Check that the normal code is output after connecting the fuse.

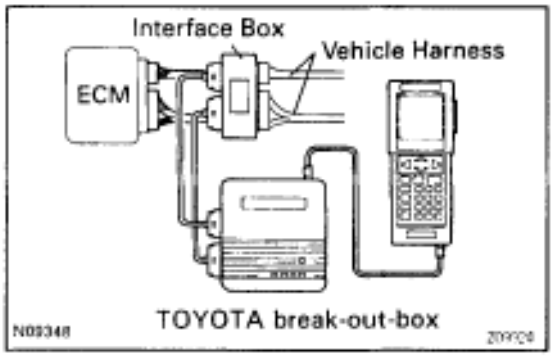

ECM TERMINALS STANDARD VALUE

ECM TERMINAL VALUES
MEASUREMENT BY USING TOYOTA BREAK–OUT –BOX AND TOYOTA HAND–HELD TESTER

1. Hook up the TOYOTA break–out–box and TOYOTA hand–held tester to the vehicle.
2. Read the ECM input/output values by following the prompts on the tester screen.
   HINT: TOYOTA hand–held tester has ”Snapshot” function. This record the measured values and is effective in the diagnosis of intermittent problems.
   Please refer to the TOYOTA hand–held tester/ TOYOTA break–out–box operator’s manual for further details.

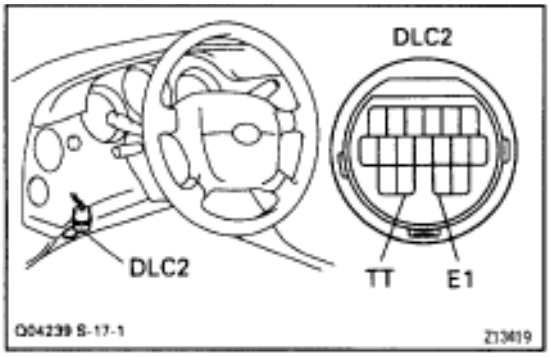

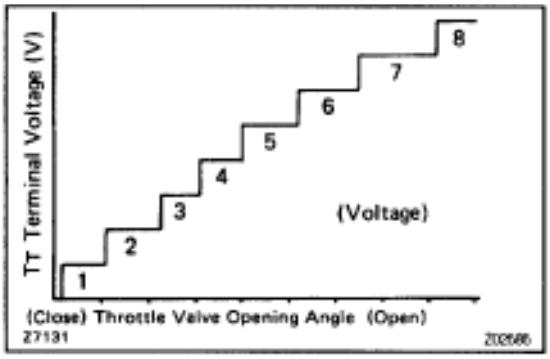

CHECK TERMINAL TT OUTPUT VOLTAGE

When a voltmeter is connected to the DLC2, the following items can be checked.

1. Throttle position sensor signal
2. Brake signal
3. Shift position signal

1. VOLTMETER CONNECTION

Connect the positive (+) probe of the voltmeter to terminal TT and the negative (–) probe to terminal E1 of the DLC2.

HINT: If a voltmeter with small internal resistance is used, the correct voltage will not be indicated, so use a voltmeter with an internal resistance of at least 10 k /V.

2. TURN IGNITION SWITCH TO ON (DO NOT START THE ENGINE)

3. CHECK THROTTLE POSITION SENSOR SIGNAL

Check if the voltage changes from approx. 0 V to approx. 8 V when the accelerator pedal is gradually depressed from the fully closed position.

4. CHECK BRAKE SIGNAL (LOCK–UP CUT SIGNAL)

(a) Open the throttle valve fully to apply approx. 8 V to terminal TT.

(b) In this condition, check terminal TT voltage when the brake pedal is depressed and released.

TT terminal voltage:

0 V (When brake pedal is depressed)

8 V (When brake pedal is released)

5. START ENGINE

6. CHECK SHIFT POSITION SIGNAL (VEHICLE SPEED ABOVE 10 km/h, 6 mph)

Check up–shifting together with terminal TT voltage.

Gear Position	Terminal TT output voltage
1st Gear	0 V
2nd Gear	2 V
3rd Gear	4 V
3rd Lock–up	5 V
O/D	6 V
O/D Lock–up	7 V

HINT: Check for light shocks from up–shifting and for changes in the tachometer.

If terminal TT Output voltage check cannot be done, do the check of TT terminal circuit on page AT2–115.

PROBLEM SYMPTOM CONFIRMATION

Taking into consideration the results of the customer problem analysis, try to reproduce the symptoms of the trouble. If the problem is that the transmission does not up–shift, does not down–shift, or the shift point is too high or too low, conduct the following road test to confirm the automatic shift schedule and simulate the problem symptoms.

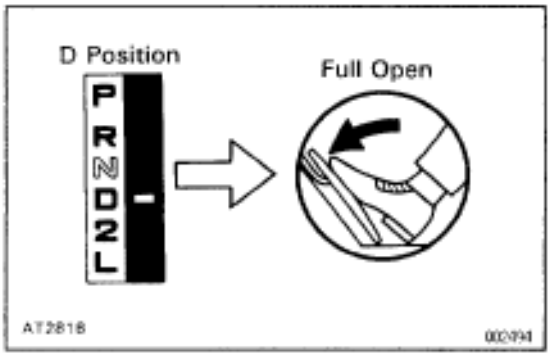

ROAD TEST

NOTICE: Do the test at normal A/T fluid operating temp. 50–80°C (122–176°F).

1. D POSITION TEST (NORM PATTERN)

Shift into the D position and keep the accelerator pedal constant at the full throttle valve opening position, and check the following points:

(a) Check up–shift operation.

Check that 1–2, 2–3 and 3–O/D up–shift takes place, at the shift point shown in the automatic shift schedule.

(See page AT2–116)

HINT:

(1) O/D Gear Up–shift Prohibition Control.

- Coolant temp. is 60°C (140°F) or less.
- If there is a 10 km/h (6 mph) difference between the set cruise control speed and vehicle speed.
- O/D main switch is pushed ON.

‘(During O/D OFF, indicator light lights up.)

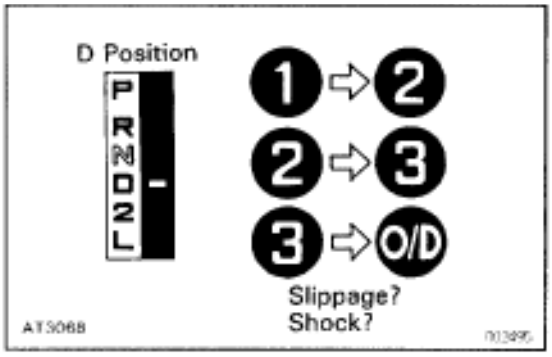

(2) O/D Gear Lock–up Prohibition Control.

- Brake pedal is depressed.
- Coolant temp. is 60°C (140°F) or less.

(b) Check for shift shock and slip.

Check for shock and slip at the 1–2, 2–3, and 3–O/ D up–shifts.

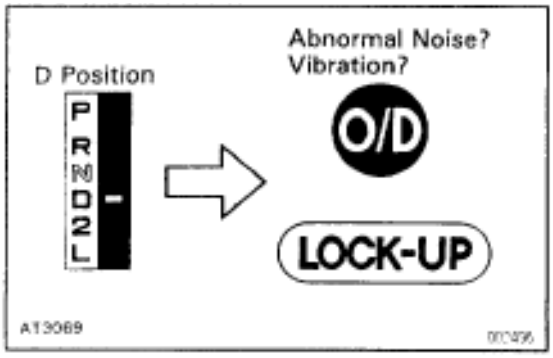

(c) Check for abnormal noise and vibration.

Run at the D position lock–up or O/D gear and check for abnormal noise and vibration.

HINT: The check for the cause of abnormal noise and vibration must be performed very thoroughly as it could also be due to loss of balance in the, torque converter clutch, etc.

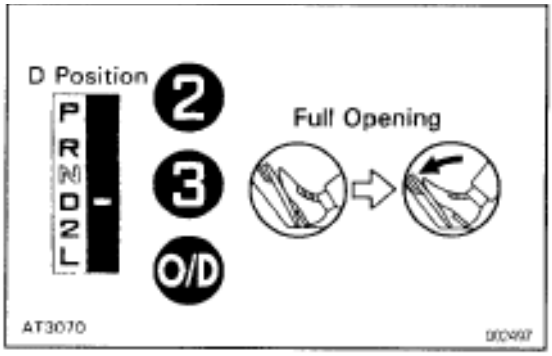

(d) Check kick–down operation.
While running in the D position, 2nd, 3rd and O/D gears, check to see that the possible kick–down vehicle speed limits for 2 → 1, 3 → 2 and O/D → 3 kick–downs conform to those indicated on the automatic shift schedule.
(See page AT2–116)

(e) Check for abnormal shock and slip at kick–down.

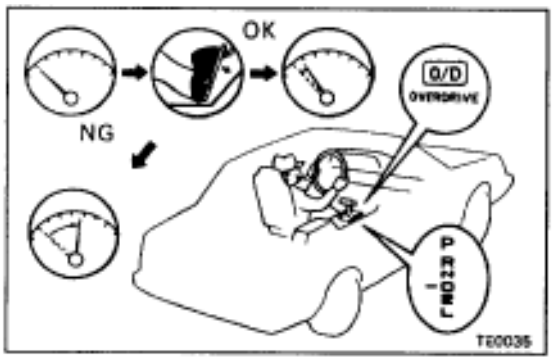

(f) Check the lock–up mechanism.
(1) Drive in D position, O/D gear, at a steady speed (lock–up ON) of about 59 km/h (37 mph).
(2) Lightly depress the accelerator pedal and check that the RPM does not change abruptly.
If there is a big jump in RPM, there is no lock–up.

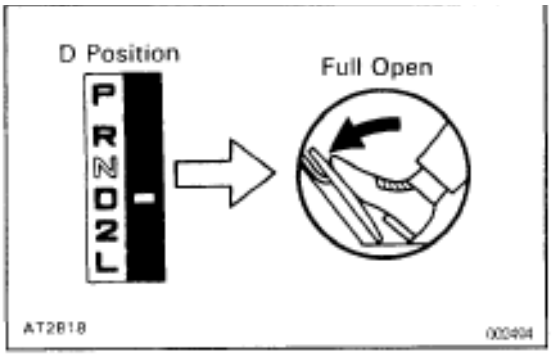

2. D POSITION TEST (MANU PATTERN)
Shift into the D position and hold the accelerator pedal constant at the full throttle valve opening position, and check the following points:

(a) Check up–shift operation.
2–3 and 3–O/D up shifts should take place, and shift points should conform to those shown in the automatic shift schedule.
(See page AT2–116)
HINT:
- O/D up–shift or lock–up will not occur when the engine coolant temp. is below 60°C (140°F) and speed is under 60 km/h (37 mph), or if there is a 10 km/h (6 mph) difference between the set cruise control speed.
- 3rd up–shift or lock–up will not occur when engine coolant temp. is 35°C (95°F) and speed is under 40 km/h (25 mph).

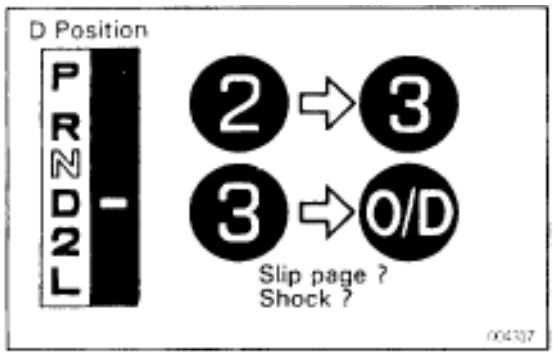

(b) Check for shift shock and slip.
In the same manner, check the shock slip at the 2 → 3 and 3 → O/D up–shifts.

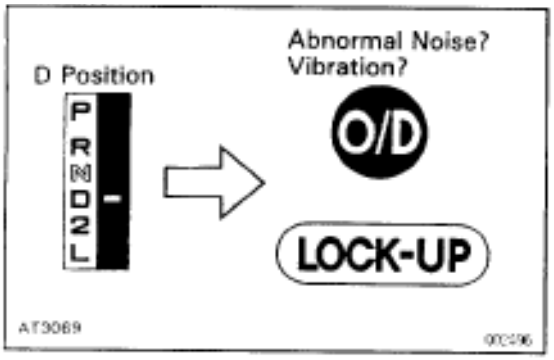

(c) Check for abnormal noise and vibration.
Run at the D position lock–up or O/D gear and check for abnormal noise and vibration.
HINT: The check for the cause of abnormal noise and vibration must be made with extreme care as it could also be due to loss of balance in the propeller shaft, differential, torque converter clutch, etc.

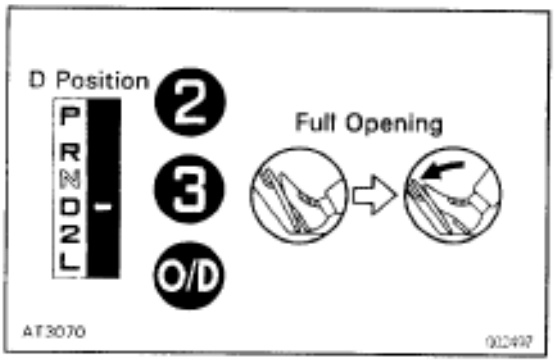

(d) Check kick–down operation.
While running in the D position, 2nd, 3rd and O/D gears, check to see that the possible kick–down vehicle speed limits for 3 → 2 and O/D → 3 kick–downs conform to those indicated on the automatic shift schedule.
(See page AT2–116)

(e) Check for abnormal shock slip at kick–down.

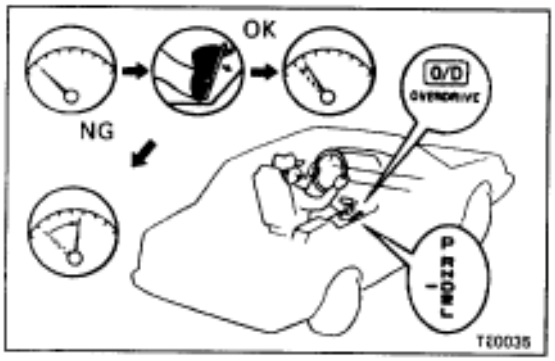

(f) Check the lock–up mechanism.
(1) Drive in D position, O/D gear, at a steady speed (lock–up ON) of about 195 km/h (121 mph).
(2) Lightly depress the accelerator pedal and check that the engine RPM does not change abruptly.
If there is big jump in the engine RPM there is no lock –up.

3. 2 POSITION TEST (NORM PATTERN)

Shift into the 2 position and, while driving with the accelerator pedal held constantly at the full throttle valve opening position, check on the following points:

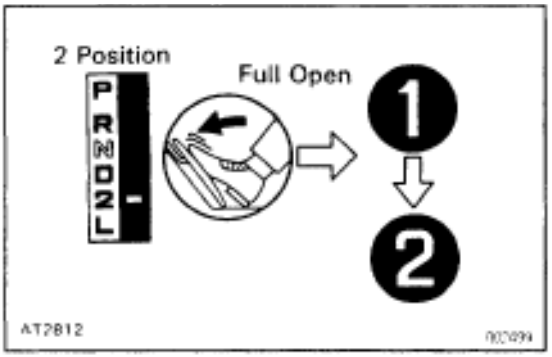

(a) Check up–shift operation.
Check to see that the 1 → 2 up–shift takes place and that the shift point conforms to the automatic shift schedule.
(See page AT2–116)
HINT: There is no O/D up–shift and lock–up in the 2 position.

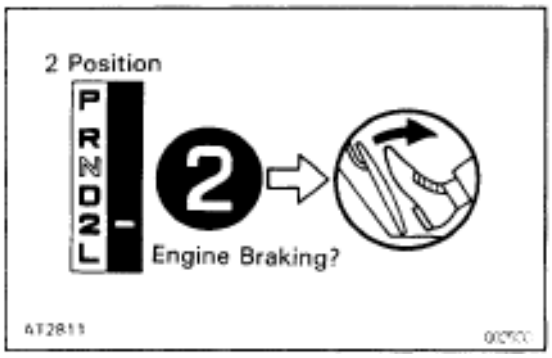

(b) Check engine braking.
While running in the 2 position and 2nd gear, release the accelerator pedal and check the engine braking effect.

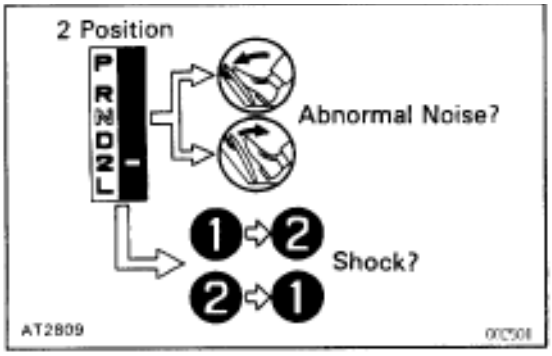

(c) Check for abnormal noise at acceleration and deceleration, and for shock at up–shift and down–shift.

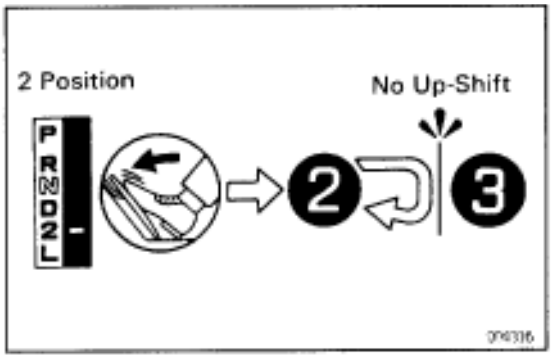

4. 2 POSITION TEST (MANU PATTERN)

Shift into the 2 position and while driving with the accelerator pedal held constantly at the full throttle valve opening position, push in one of the pattern selectors and check these points:

(a) Check no up–shift.

While running in the 2 position, check to see that there is no up–shift to 3rd gear.

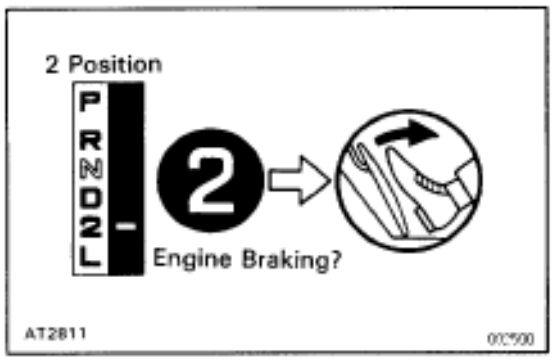

(b) Check engine braking.

While running in the 2 position and 2nd gear, release the accelerator pedal and check the engine braking effect.

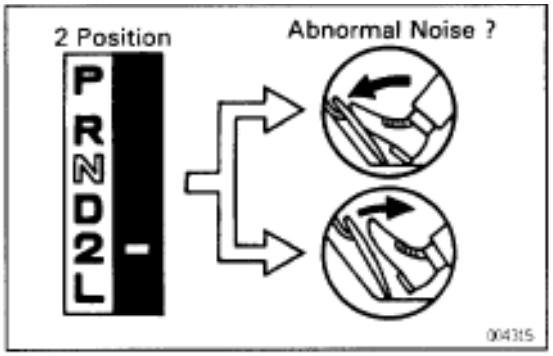

(c) Check for abnormal noise during acceleration and deceleration.

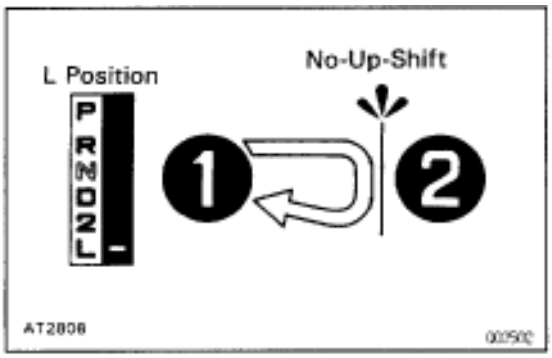

5. L POSITION TEST

Shift into the L position and while driving with the accelerator pedal held constantly at the full throttle valve opening position, check these points:

(a) Check no up–shift.

While running in the L position, check that there is no up–shift to 2nd gear.

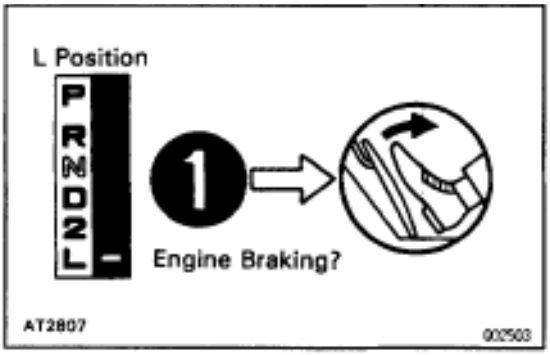

(b) Check engine braking
While running in the L position, release the accelerator pedal and check the engine braking effect.

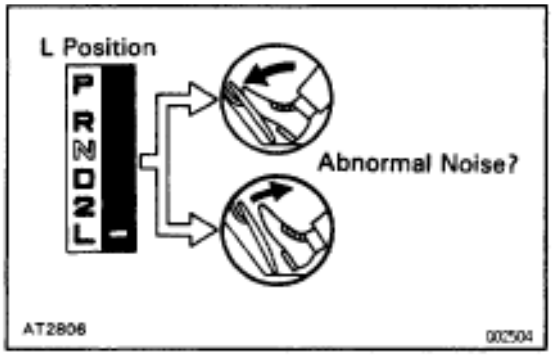

(c) Check for abnormal noise during acceleration and deceleration.

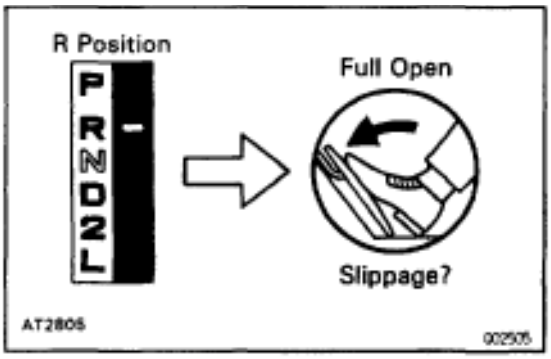

6. R POSITION TEST

Shift into the R position and while starting at full throttle, check for slipping.

CAUTION: Before conducting this test ensure that the test area is free from personnel and obstruction.

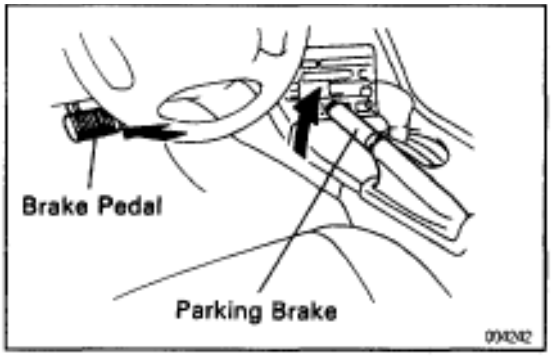

7. P POSITION TEST

Stop the vehicle on a gradient (more than 5°) and after shifting into the P position, release the parking brake.

Then check to see that the parking lock pawl holds the vehicle in place.

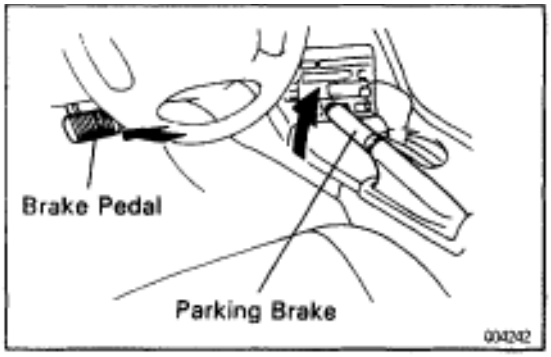

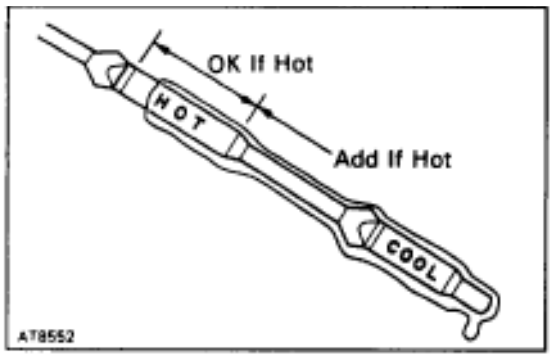

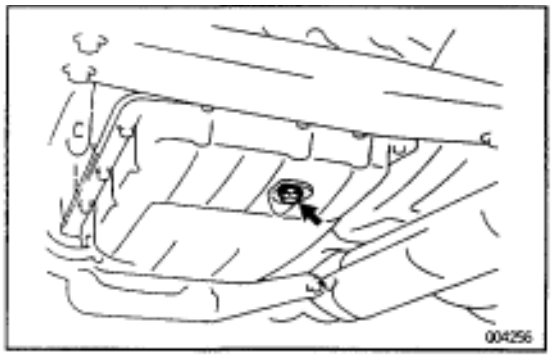

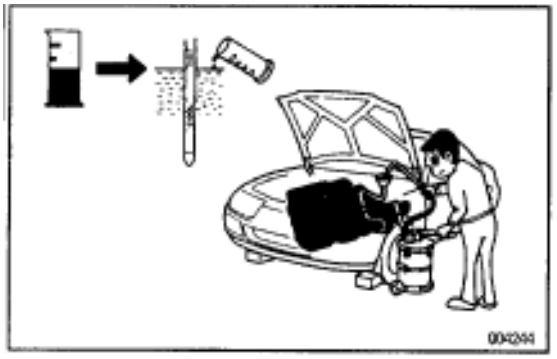

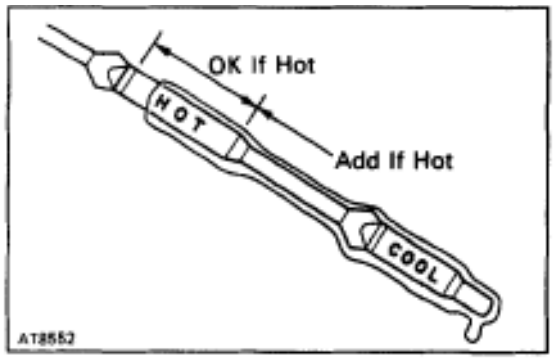

PRELIMINARY CHECK

1. CHECK FLUID LEVEL

HINT:

- Drive the vehicle so that the engine and transmission are at normal operating temperature.
  Fluid temp.: 70–80°C (158–176°F)
- Only use the COOL position on the dipstick as a rough reference when the fluid is replaced or the engine does not run.

(a) Park the vehicle on a level surface and set the parking brake.

(b) With the engine idling and the brake pedal depressed, shift the shift lever into all positions from P to L position and return to P position.

(c) Pull out the oil level gauge and wipe it clean.

(d) Push it back fully into the pipe.

(e) Pull it out and check that the fluid level is in the HOT position. If the level is at the low side, add fluid.

Fluid type:

ATF TYPE T–II or Equivalent

NOTICE: Do not overfill

2. CHECK FLUID CONDITION

If the fluid smells burnt or is black, replace it.

3. REPLACE TRANSMISSION FLUID

(a) Remove the drain plug and drain the fluid.

(b) Reinstall the drain plug securely.

(c) With the engine OFF, add new fluid through the oil filler pipe.

Fluid type:

ATF TYPE T–II or Equivalent

Capacity:

Dry fill: 8.2 liters (8.7 US qts, 7.2 Imp. qts)

Drain and refill: 1.9 liters (2.0 US qts, 1.6 Imp. qts)

(d) Start the engine and shift the shift lever into all positions from P to L position and then shift into P position.

(e) With the engine idling, check the fluid level. Add fluid up to the COOL level on the dipstick.

(f) Check the fluid level at the normal operating temperature 70–80°C (158–176°F) and add as necessary.

NOTICE: Do not overfill.

4. CHECK FLUID LEAKS

Check for leaks in the transmission.

If there are leaks, it is necessary to repair or replace O –rings, seal packings, oil seals, plugs or other parts.



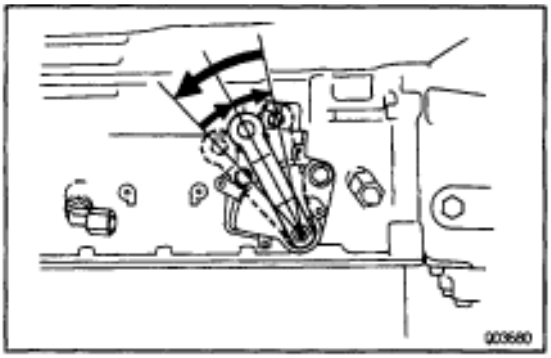

5. INSPECT AND ADJUST SHIFT LEVER POSITION

When shifting the shift lever from the N position to other positions, check that the lever can be shifted smoothly and accurately to each position and that the position indicator correctly indicates the position.

If the indicator is not aligned with the correct position, carry out the following adjustment procedures:

(a) Loosen the nut on the control shaft lever.
(b) Push the control shaft lever fully rearward.
(c) Return the control shaft lever 2 notches to N position.
(d) Set the shift lever to N position.
(e) While holding the shift lever lightly toward the R position side, tighten the shift lever nut.
(f) Start the engine and make sure that the vehicle moves forward when shifting the lever from the N to D position and reverses when shifting it to the R position.

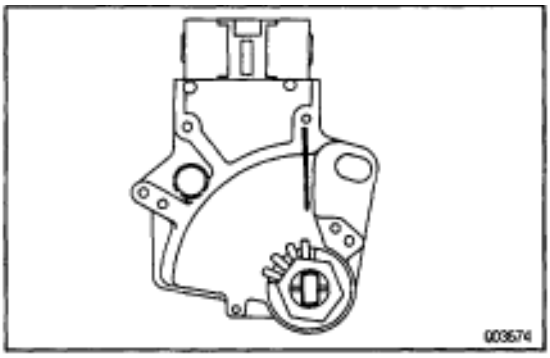

6. INSPECT AND ADJUST PARK/NEUTRAL POSITION SWITCH

Check that the engine can be started with the shift lever only in the N or P position, but not in other positions.

If not as stated above, carry out these adjustment procedures:

(a) Loosen the park/neutral position switch bolt and set the shift lever to the N position.
(b) Align the groove and neutral basic line.
(c) Hold in position and tighten the bolt.

Torque: 12 N·m (125 kgf·cm, 9 ft·lbf)

For continuity inspection of the park/neutral position switch, see page AT2–101.

7. INSPECT IDLE SPEED

Idle speed:

650±50 rpm

(In N position and air conditioner OFF)

MECHANICAL SYSTEM TESTS

STALL TEST

The object of this test is to check the overall performance of the transmission and engine by measuring the stall speeds in the D and R positions.

NOTICE:

- **Do the test at normal operating fluid temp. 50–80°C (122–176°F).**
- **Do not continuously run this test longer than 5 seconds.**
- **To ensure safety, conduct this test in a wide, clear, level area which provides good traction.**
- **The stall test should always be carried out in pairs. One technician should observe the conditions of wheels or wheel stoppers outside the vehicle while the other is doing the test.**

MEASURE STALL SPEED

(a) Chock the 4 wheels.

(b) Fully apply the parking brake.

(c) Connect a tachometer to the engine.

(d) Start the engine and check idle.

(e) Keep you foot pressed firmly on the brake pedal.

(f) Shift into the D position. Fully depress the accelerator pedal.

Quickly read the stall speed.

Stall speed:

2,600±150 rpm

(g) Do the same test in R position.

Quickly read the stall speed.

Stall speed:

2,600±150 rpm

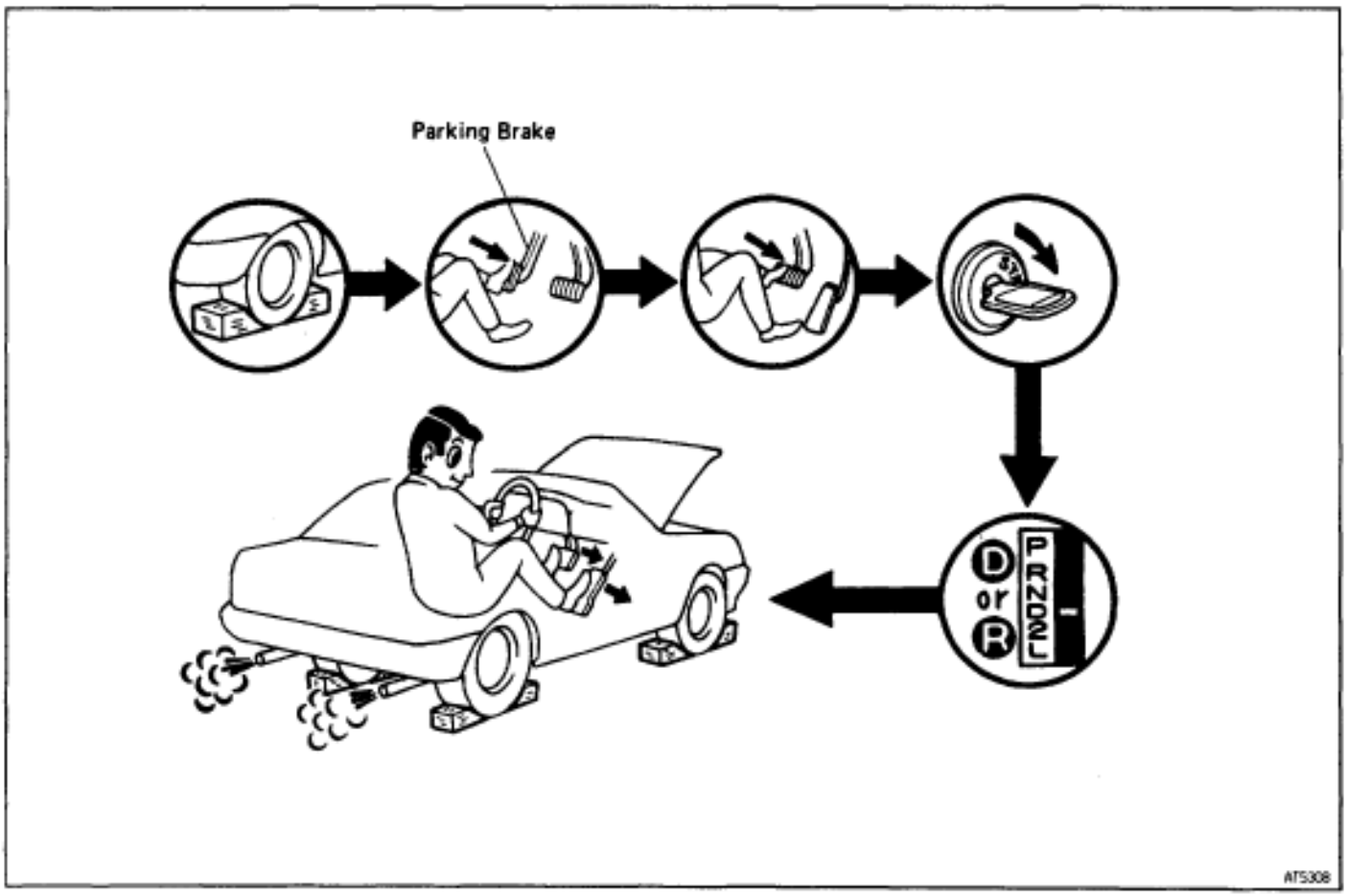

EVALUATION

Problem	Possible cause
(a) Stall speed low in D and R positions.	★Engine output may be insufficient. ★Stator one–way clutch is operating properly HINT: If more than 600 rpm below the specified value, the torque converter clutch could be faulty.
(b) Stall speed high in D position	★Line pressure too low. ★Forward clutch slipping ★No.2 one–way clutch not operating properly ★O/D one–way clutch not operating properly
(c) Stall speed high in R position.	★Line pressure too low ★Direct clutch slipping ★First and reverse brake slipping ★O/D clutch slipping
(d) Stall speed high in D and R positions.	★Line pressure too low ★Improper fluid level ★O/D one–way clutch not operating properly

TIME LAG TEST

When the shift lever is shifted while the engine is idling, there will be a certain time lapse or lag before the shock can be felt. This is used for checking the condition of the O/D direct clutch, forward clutch, direct clutch, and first and reverse brake.

NOTICE:

- **Do the test at normal operating fluid temp. 50–80°C (122–176°F).**
- **Be sure to allow 1 minute interval between tests.**
- **Take 3 measurements and take the average value.**

MEASURE TIME LAG

(a) Fully apply the parking brake

(b) Start the engine and check idle speed.

Idle speed:

650±50 rpm (In N position and air conditioner OFF)

(c) Shift the shift lever from N to D position. Using a stop watch, measure the time it takes from shifting the lever until the shock is felt.

In same manner, measure the time lag for N → R.

Time lag:

N → D Less than 1.2 seconds

N → R Less than 1.5 seconds

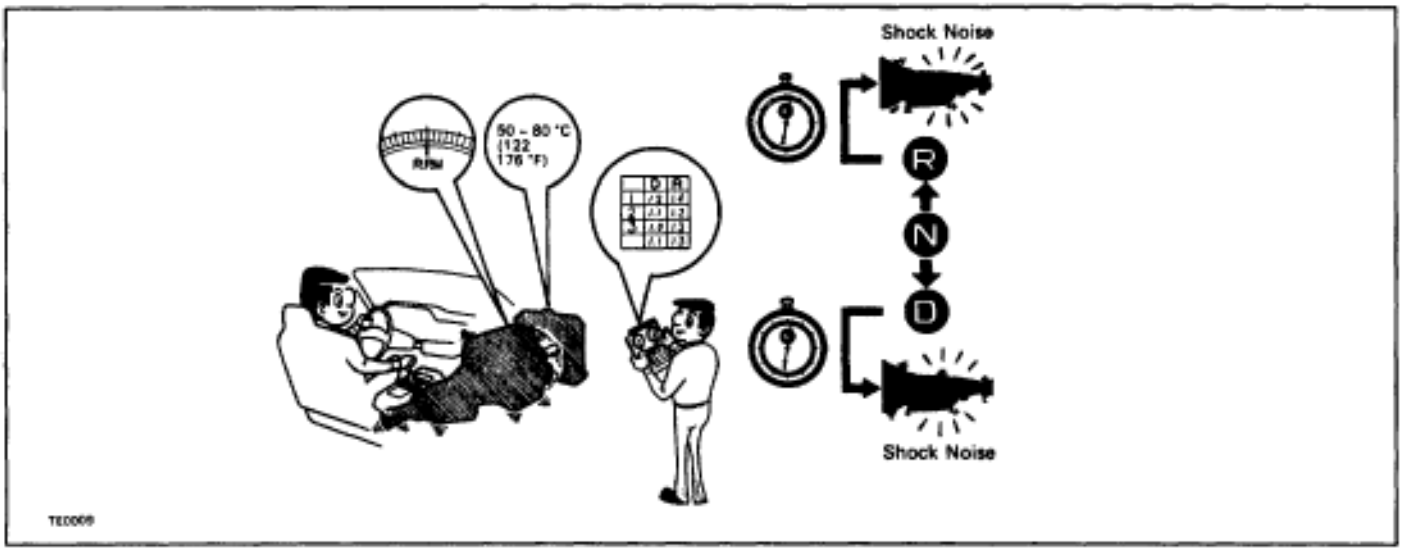

EVALUATION

If N → D or N → R time lag is longer than specified:

Problem	Possible cause
N→D time lag is longer	★Line pressure too low ★Forward clutch worn ★O/D one–way clutch not operating properly
N→R time lag is longer	★Line pressure too low ★Direct clutch worn ★First and reverse brake worn ★O/D clutch worn

HYDRAULIC TEST

MEASURE LINE PRESSURE

NOTICE:

- **Do the test at normal operating fluid temp. 50–80°C (122–176°F)**
- **The line pressure test should always be carried out in pairs. One technician should observe the conditions of wheels or wheel stoppers outside the vehicle while the other is doing the test.**
- **Be careful to prevent the oil pressure gauge hose from interfering with the exhaust pipe.**

(a) Warm up the transmission fluid.

(b) Remove the test plug on the transmission case left side and connect the oil pressure gauge (SST).
SST 09992–00094 (Oil pressure gauge)
HINT: Connecting the oil pressure gauge will be made easier by moving LH side heat insulator side.

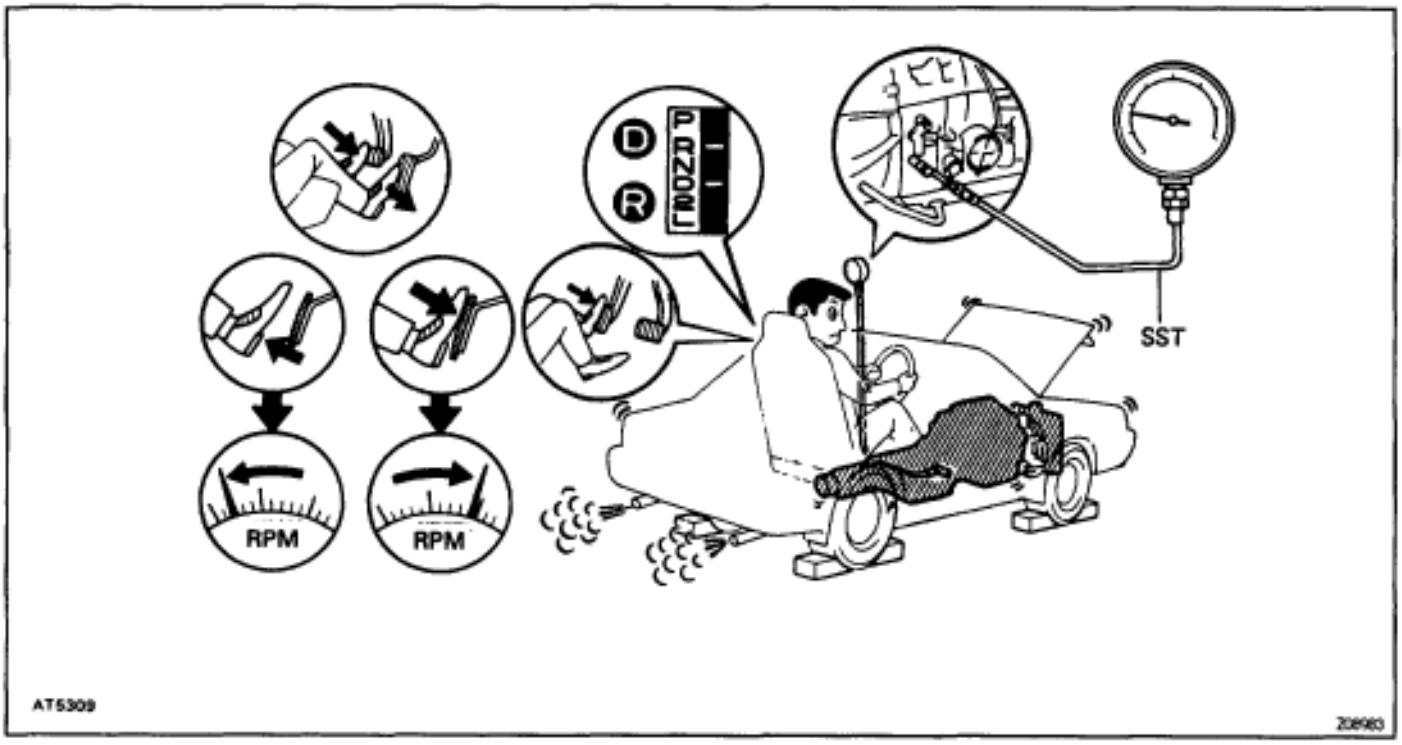

(c) Chock the 4 wheels.

(d) Fully apply the parking brake.

(e) Start the engine and check idling speed.

(f) Keep your left foot pressed firmly on the brake pedal and shift into D position.

(g) Measure the line pressure when the engine is idling.

(h) Fully depress the accelerator. Quickly read the highest line pressure when engine speed reaches stall speed.
NOTICE: Release the accelerator pedal and stop test if the wheels begin to rotate before the engine speed reaches specified stall speed.

(i) In the same manner, do the test in R position.

SPECIFIED LINE PRESSURE

Line pressure:

Condition	D position kPa (kgf/cm^2 psi)	R position kPa (kgf/cm^2, psi)
Idling	471–530 (4.8–5.4, 68–77)	686–785 (7.0–8.0, 100–114)
Stall	1,334–1,470 (13.6–15.0, 193–213)	1,697–2,030 (17.3–20.7, 246–294)

If the measured pressures are not up to specified values, check the No.5 solenoid valve and retest.

EVALUATION

Problem	Possible cause
If the measured values at all positions are higher.	Throttle cable out of adjustment Throttle valve defective Regulator valve defective
If the measured values at all positions are lower.	Throttle cable out of adjustment Throttle valve defective Regulator valve defective Oil pump defective O/D direct clutch defective
If pressure is low in the D position only.	D position circuit fluid leakage Forward clutch defective
If pressure is low in the R position only.	R position circuit fluid leakage Direct clutch defective First and reverse brake defective

MEASURE ACCUMULATOR BACK PRESSURE

NOTICE:

- **Do the test at normal operating fluid temp. 50–80°C (122–176°F).**
- **Be careful to prevent the oil pressure gauge hose from interfering with the exhaust pipe.**

(a) Warm up the transmission fluid.

(b) Remove the test plug on the transmission case rear right side and connect the oil pressure gauge (SST)
SST 09992–00094 (Oil pressure gauge)
HINT: Connecting the oil pressure gauge will be made easier by moving the RH side head insulator aside.

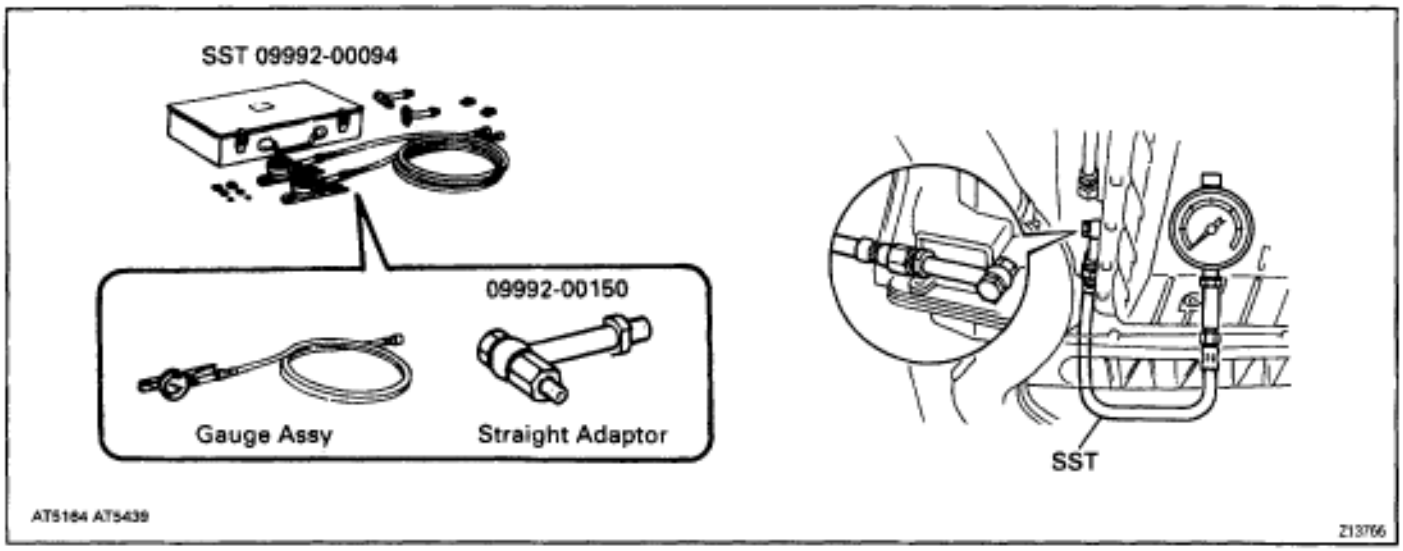

(c) Remove the passenger side floor carpet and ECM protector.

(d) Connect the SST (check harness A) between ECM and connector of vehicle wire harness.
SST: 09990–01000

(e) Install one test lead probe into the terminal SLN of the ECM wire harness side connector and take care not to ground the other test lead probe.
HINT: Prepare test leads which are connected with an approximately 8 W light bulb.

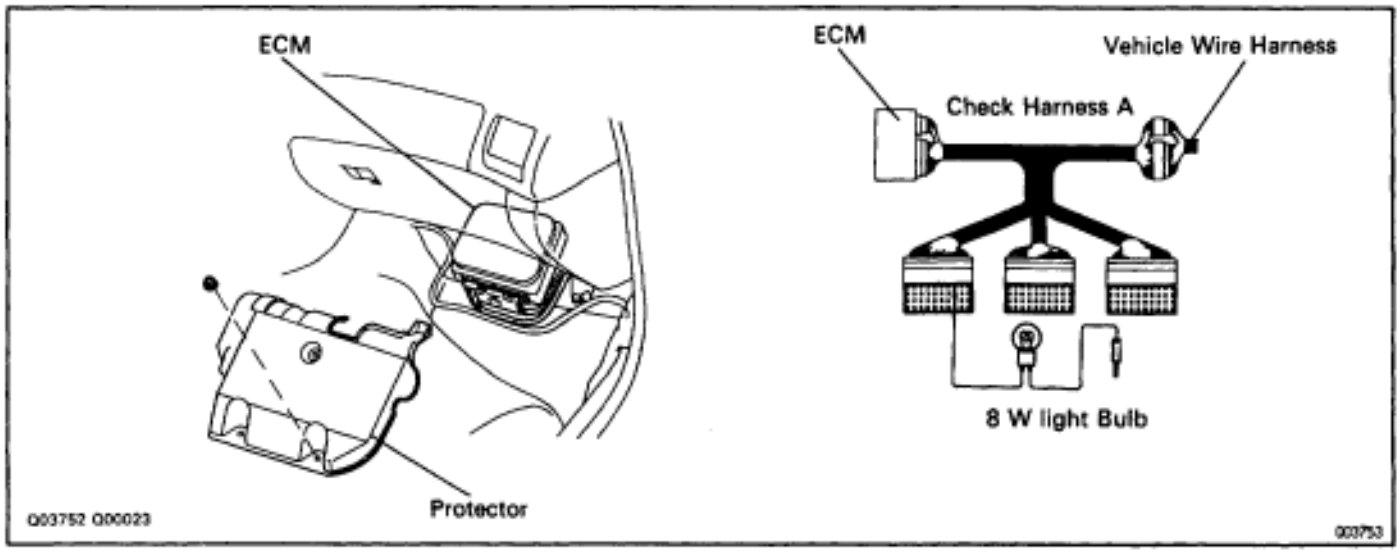

(f) Fully apply the parking brake and chock the 4 wheels.
(g) Start the engine and check idling speed.
(h) Keep your left foot pressed firmly on the brake pedal and shift into D position.
(i) Measure the accumulator back pressure.
(j) With the conditions the same as in (h), ground the other probe or the test lead which has one end inserted into the terminal SLN of the ECM harness side connector, then measure the accumulator back pressure again.

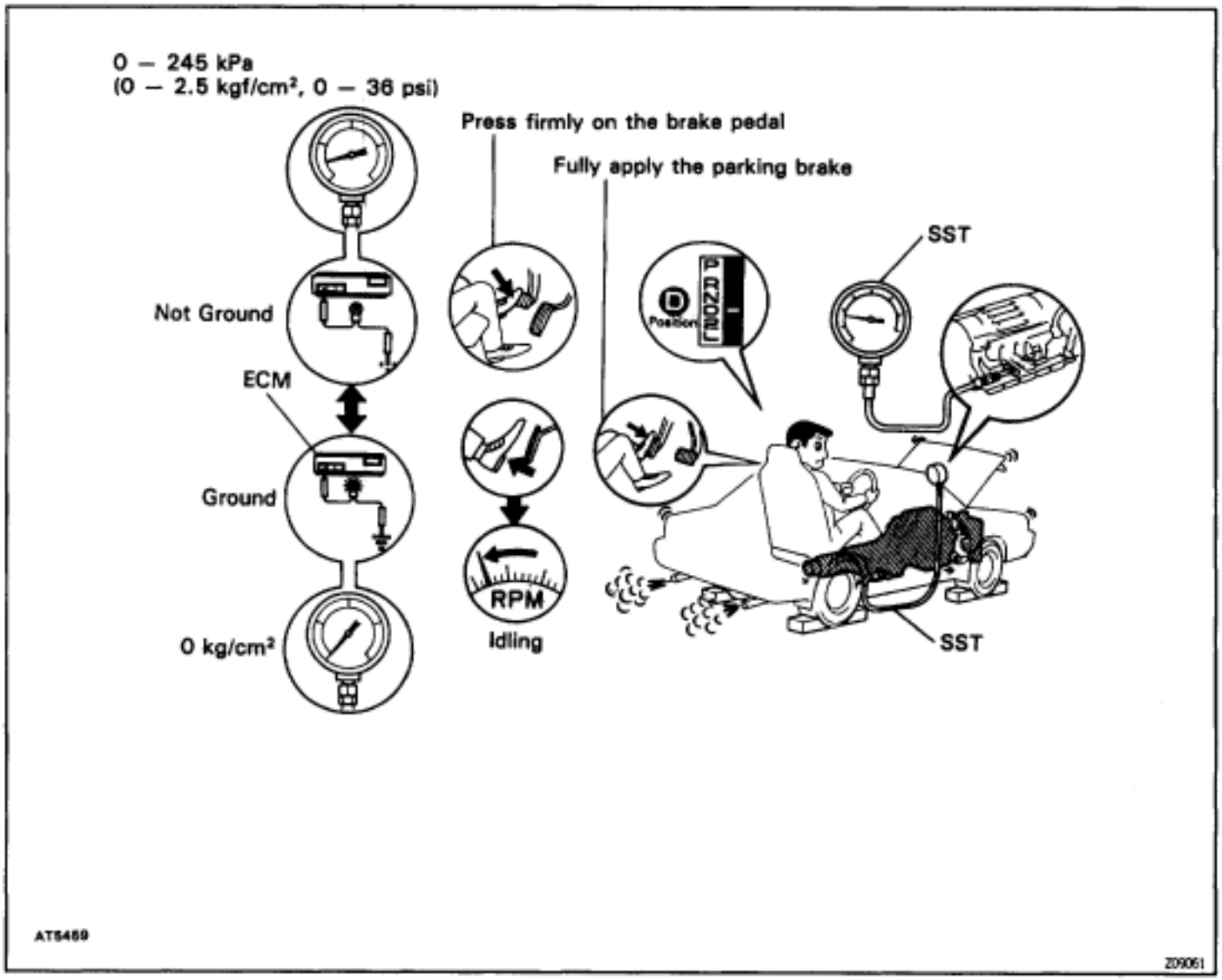

SPECIFIED ACCUMULATOR BACK PRESSURE (D position, Idling)

Condition of ECM terminal SLN	Not ground	Ground
Accumulator back pressure kPa (kgf/cm^2, psi)	177–255 (1.8–2.6, 26–37)	0

EVALUATION

Problem	Possible cause
The accumulator back pressure is not as specified (high or low) when the terminal SLN is not ground.	Throttle cable out of adjustment Throttle valve defective Solenoid modulator valve defective SLN solenoid valve defective Accumulator control valve defective
The accumulator back pressure does not become 0 kgf/cm^2 when the terminal SLN is grounded.	SLN solenoid valve defective

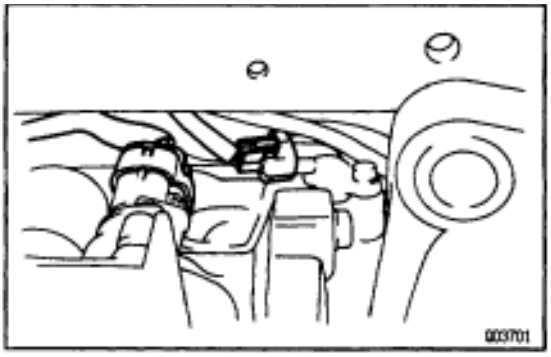

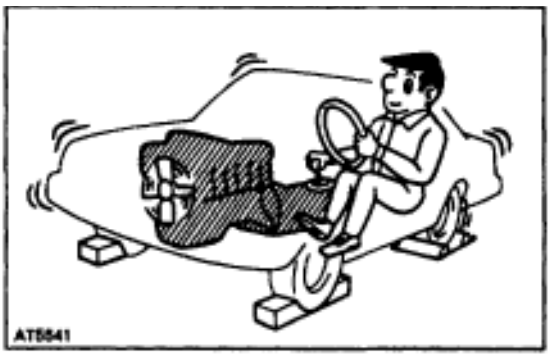

MANUAL SHIFTING TEST

HINT: With this test, it can be determined whether the trouble is within the electrical circuit or is a mechanical problem in the transmission.

1. **DISCONNECT SOLENOID WIRE**
2. **INSPECT MANUAL DRIVING OPERATION**

Check that the shift and gear positions correspond with the table below.

Shift Position	Gear Position
D	O/D
2	3rd
L	1st
R	Reverse
P	Pawl Lock

HINT: If the L, 2 and D position gear positions are difficult to distinguish, do the following road test.

- While driving, shift through the L, 2 and D positions. Check that the gear change corresponds to the shift position.

If any abnormality is found in the above test, the problem is in the transmission itself.

3. **CONNECT SOLENOID WIRE**
4. **CANCEL OUT DIAGNOSTIC TROUBLE CODE**

(See page AT2–35**)**

DIAGNOSTIC TROUBLE CODE CHART

If a diagnostic trouble code is displayed during the diagnostic trouble code check, check the circuit listed for that code in the table below and proceed to the page given.

DTC. No.	Blinking Pattern	Circuit	Diagnostic Trouble Code Detection Condition
38	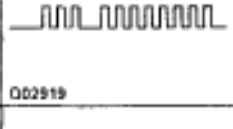	A/T fluid temp. sensor	Either (a) or (b) are detected for 0.5 sec. or more: (a) Temp. sensor resistance less than 79 (b) After the engine has been operating for 15 minutes or more, the resistance at the temp. sensor is more than 156 k .
42		No.1 vehicle speed sensor	All conditions below are detected for 4 secs. or more: (2 trip detection logic)*3 (a) No. No.1 vehicle speed sensor signal in 16 pulses of No.2 vehicle speed sensor signal (b) Vehicle speed: 9 km/h (5.6 mph) or more for or more (c) Park/neutral position switch: OFF (Other than P or N position)
46	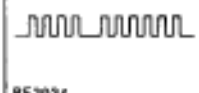	No.4 solenoid valve	All conditions below are detected for 1 sec. or more: (2 trip detection logic)*3 (a) ECM output duty signal to No.4 solenoid in 90% or higher duty ratio (b) Current to No.4 solenoid: 330±100 mA or less
61		No.2 vehicle speed sensor	All conditions below are detected: (2 trip detection logic)*3 (a) No. No.2 vehicle speed sensor signal in 4 pulses of No.1 vehicle speed sensor signal (b) Vehicle speed: 9 km/h (5.6 mph) or more for 4 secs. or more (c) Park/neutral position switch: OFF (Other than P or N position)
62		No.1 solenoid valve	(1) Solenoid resistance of 8 or less is detected (*) times or more when NO.1 solenoid is energized. (2) Solenoid resistance of 100 k or more is detected (*) 8 times or more when No.1 solenoid is not energized. (*) If the above failure are detected less than 8 times, the ECM memorizes the malfunction code but the O/D OFF indicator light does not blink.
63		No.2 solenoid valve	(1) Solenoid resistance of 8 or less is detected (*) times or more when NO.2 solenoid is energized. (2) Solenoid resistance of 100 k or more is detected (*) 8 times or more when No.2 solenoid is not energized. (*) If the above failure are detected less than 8 times, the ECM memorizes the malfunction code but the O/D OFF indicator light does not blink.
64		No.3 solenoid circuit	All conditions below are detected for 1 sec. or more: (2 trip detection logic)*3 (a) ECM output duty signal to No.3 solenoid in 90% or higher duty ratio (b) Current to No.3 solenoid: 450±100 mA or less

Trouble Area	O/D OFF Indicator Light *1 Blinks	Memory *2	See Page
Harness or connector between A/T fluid temp. sensor and ECM A/T fluid temp. sensor ECM	★	★	AT2–70
Harness or connector between No.1 vehicle speed sensor and ECM No.1 vehicle speed sensor Telltale light RH ECM	★	★	AT2–72
Harness or connector between No.4 solenoid valve and ECM No.4 solenoid valve ECM	★	★	AT2–75
Harness or connector between No.2 vehicle speed sensor and ECM No.2 vehicle speed sensor ECM	★	★	AT2–79
Harness or connector between No.1 solenoid valve and ECM No.1 solenoid valve ECM	★	★	AT2–82
Harness or connector between No.2 solenoid valve and ECM No.2 solenoid valve ECM	★	★	AT2–82
Harness or connector between No.3 solenoid valve and ECM No.3 solenoid valve ECM	X	★	AT2–85

DTC. No.	Blinking Pattern	Circuit	Diagnostic Trouble Code Detection Condition
67	 BE3936	O/D direct clutch speed sensor	All conditions below are detected for 4 secs. or more: (2 trip detection logic)*3 (a) Gear change not being performed. (b) Gear position: 1st, 2nd or 3rd (c) T/M input shaft rpm: Less than 300 rpm (d) T/M output shaft rpm: 1000 rpm or more
77	 BE3937	No.5 solenoid circuit	Any of condition below are detected: (2 trip detection logic)*3 (a) SLT⁻ terminal: 0 V or 5 V for 1 sec. or more.
89	 R05005	TRAC ECU circuit	All conditions below are detected for 5 secs. or more: (a) No.1 vehicle speed sensor: 9 km/h (5.6 mph) or more (b) Mirror check of TRAC ECU input signal is abnormal. (c) TRAC ECU input signal does not inform to ECM. (d) TRAC ECU input signal order is abnormal.

Trouble Area	O/D OFF Indicator Light *1 Blinks	Memory *2	See Page
Harness or connector between O/D direct clutch speed sensor and ECM O/D direct clutch speed sensor ECM	★	★	AT2–89
Harness or connector between No.5 solenoid valve and ECM No.5 solenoid valve ECM	★	★	AT2–92
Harness or connector between TRAC ECU and ECM. TRAC ECU	★	★	AT2–95

*1: ”O” mark means ”O/D OFF” light blinks once every 2 seconds.
”X” mark means ”O/D OFF” light never blinks.

*2: ”O” marks means the ECM memorizes the malfunction code if the ECM detects the diagnostic trouble code detection condition.

*3: This indicates items for which ”2 trip detection logic” is used. With this logic, when a logic malfunction is first detected, the malfunction is temporarily stored in the ECM memory. If the same case is detected again during the second drive test, this second detection causes the O/D OFF indicator light to blink. The 2 trip repeats the same mode twice. (However, the IG switch must be turned OFF between the 1st trip and 2nd trip.)

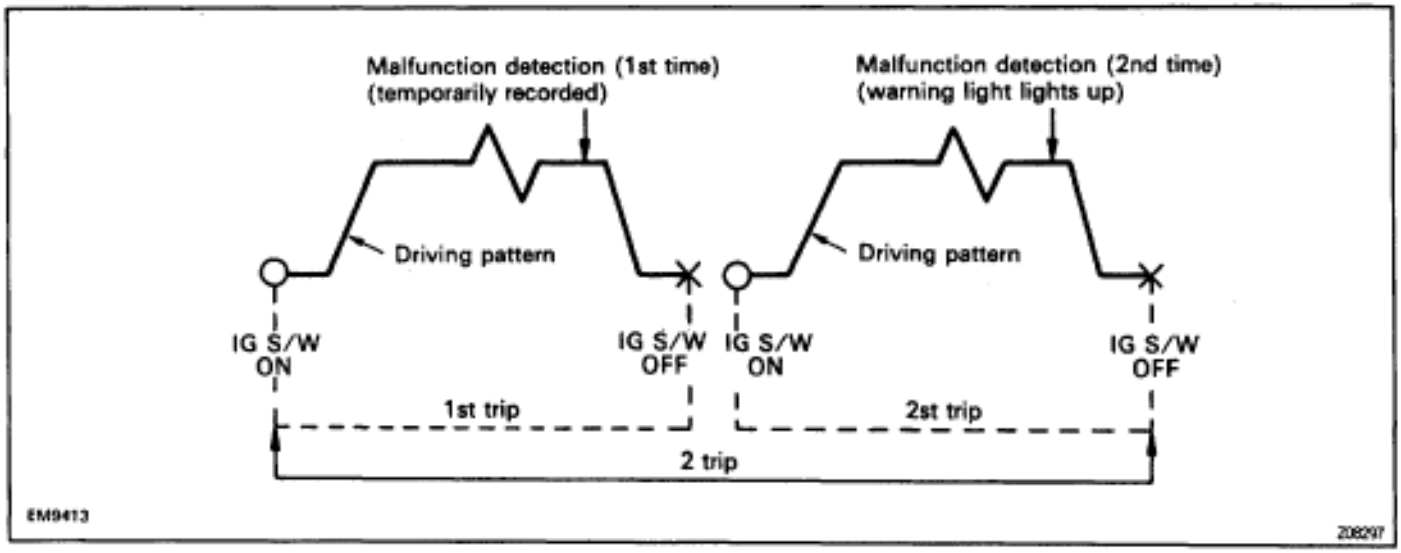

HINT:

- If the malfunction returns to normal while a malfunction warning is being output, the O/D OFF indicator light stops blinking and goes off.
  However, the diagnostic trouble code is retained in memory until it is cleared from memory.
- If the diagnosis system outputs a diagnostic trouble code even though the O/D OFF indicator was not blinking, there is intermittent trouble. Check all the connections in the circuits corresponding to that code.
- Codes 42, 62, 63 and 64 are limited to short or open circuits in the electrical system comprised of the solenoids, wire harnesses, and connectors. The ECM is unable to detect mechanical trouble (sticking, for example) in the solenoid valves.
- If the speed sensors No.1 and No.2 happen to fail simultaneously, the ECM will neither alert the driver by blinking the O/D OFF indicator nor record any diagnostic trouble code. It will, however, decide that the vehicle can be driven only in 1st and none of the other gears, shifting upward will then be prohibited.

Memo

STANDARD VALUE OF ECM TERMINAL

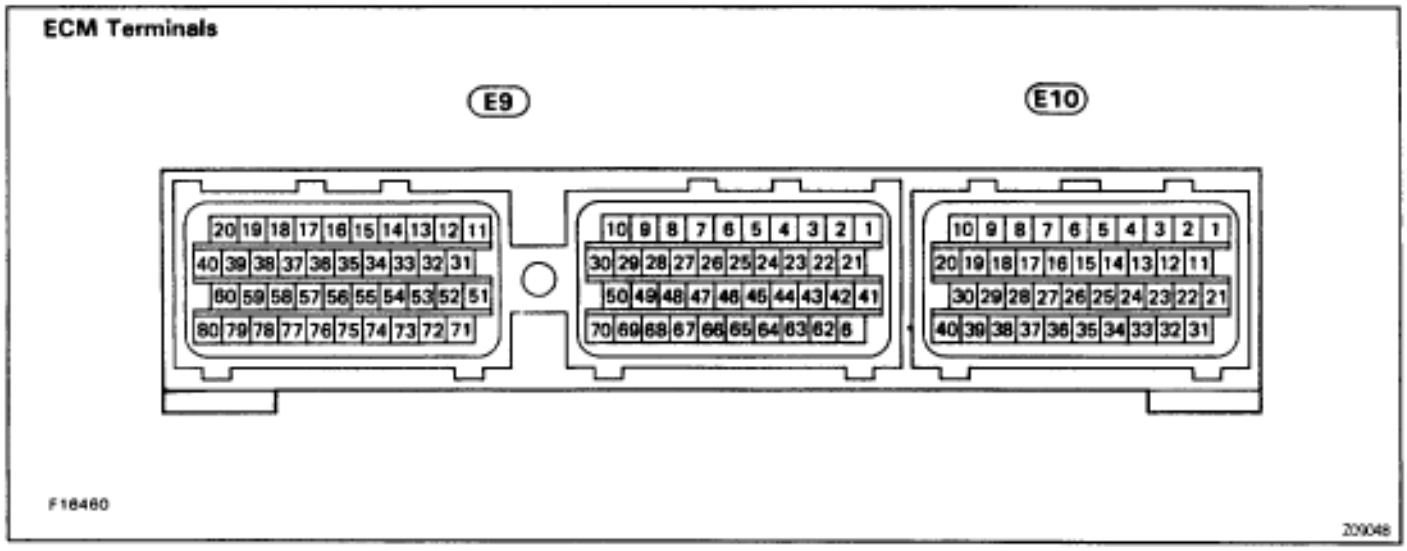

(*A= (E10), B= (E9))

Terminals	Symbols	Wiring Color	Condition		Standard Value
B13 – B69	SLN⊖–E1	Y–G ↔ BR	Ignition switch ON		10 – 14 V
B14 – B69	SLU⊖–E1	LG–B ↔ BR	Ignition switch ON		10 – 14 V
B76 – B69	NSW–E1	B–W ↔ BR	IG ON	Shift Lever: P or N position	Below 1 V
				Shift Lever: Other than P or N position	10 – 14 V
B1 – B21	NCO⊖–NCO⊕	L ↔ Y	IG OFF, Disconnect ECM connector		560 – 680
B3 – B23	SP2⊖–SP2⊕	G ↔ R	IG OFF		560 – 680
B10 – B69	S1 – E1	WR ↔ BR	IG OFF		10 – 16
			Vehicle driving in 2nd gear position		10 – 14 V
			IG ON		10 – 14 V
B9 – B69	S2 – E1	RL ↔ BR	IG OFF		10 – 16
			Vehicle driving in 2nd or 3rd position		10 – 14 V
			IG ON		Below 0.5 V
B43 – B65	VTA1 – E2	Y ↔ BR	IG ON	Accel. Pedal is not depressed	Below 1.5 V
				Accel. Pedal is fully depressed	3.0 – 5.5 V
B64 – B65	IDL1 – E2	R ↔ BR	IG ON	Accel. Pedal is not depressed	Below 1 V
				Accel. Pedal is depressed	10 – 14 V
A2 – B65	SP1 – E2	P ↔ BR	Ignition switch ON turn one rear wheel slowly		Repeat 0–8 V or above
A3 – B69	KD – E1	Y ↔ BR	IG ON	Kickdown SW: OFF (Accel. pedal is not depressed)	10 – 14 V
				Kickdown SW: ON (Accel. pedal is fully depressed)	Below 0.5 V
A7 – B69	R – E1	RB ↔ BR	IG ON	Shift position: R position	10 – 14 V
				Shift position: Other than R position	Below 0.5 V
A9 – B69	2 – E1	LG–R ↔ BR	IG ON	Shift position: 2 position	10 – 14 V
				Shift position: Other than 2 position	Below 0.5 V
A10 – B69	L – E1	G–B ↔ BR	IG ON	Shift position: L position	10 – 14 V
				Shift position: Other than L position	Below 0.5 V
A12 – B69	OD1 – E1	BR–B ↔ BR	Ignition switch ON		4 – 6 V

(*A= (E10), B= (E9))

Terminals	Symbols	Wiring Color	Condition		Standard Value
A14 – B69	TRC⊕ – E1	O ↔ BR	Ignition switch ON		10 – 14 V
A13 – B69	TRC⊖– E1	W–R ↔ BR	Ignition switch ON		10 – 14 V
B12 – B31	SLT⊖–SLT⊕	LG–R ↔ W–G	Ignition switch ON		10 – 14 V
A18 – B69	M – E1	G–Y ↔ BR	IG ON	Pattern select SW: MANU	10 – 14 V
				Pattern select SW: NORM	Below 1 V
A28 – B69	OD2 – E1	V–G ↔ BR	IG ON	O/D main SW: ON	10 – 14 V
				O/D main SW: OFF	Below 0.5 V
A27 – B69	EFI⊕ – E1	B ↔ BR	Ignition switch ON		10 – 14 V
A26 – B69	EFI⊖ – E1	W ↔ BR	Ignition switch ON		10 – 14 V

MATRIX CHART OF PROBLEM SYMPTOMS

If a normal code is displayed during the diagnostic trouble code check but the trouble still occurs, check the circuits for each symptom in the order given in the charts on the following pages and proceed to the page given for troubleshooting.

The Matrix Chart is divided into 3 chapters.

Chapter 1: Electronic Circuit Matrix Chart

Chapter 2: On–vehicle Repair Matrix Chart

Chapter 3: Off–vehicle Repair Matrix Chart

When troubleshooting, check Chapter 1 first. If instructions are given in Chapter 1 to proceed to Chapter 2 or 3, proceed as instructed.

1. If the instruction ”Proceed to next circuit inspection shown on matrix chart” is given in the flow chart for each circuit, proceed to the circuit with the next highest number in the table to continue the check.
2. If the trouble still occurs even though there are no abnormalities in any of the other circuits, then check or replace the ECM.

–Memo–

Chapter 1. Electronic Circuit

Symptom / Suspect Area	See Page	AT2–72	AT2–75	AT2–79	AT2–82	AT2–85	AT2–89	AT2–97
		No.1 Vehicle speed sensor circuit	No.4 solenoid circuit	No.2 Vehicle speed sensor circuit	No.1, No.2 solenoid circuit	No.3 solenoid circuit	O/D direct clutch speed sensor circuit	(Sub)–throttle position sensor circuit
Vehicle does not move in any forward position and reverse position								
Vehicle does not move in particular position or positions								
No up–shift	1st → 2nd	3		4	1			2
	2nd → 3rd	3		4	1			2
	3rd → O/D	3		4	2			5
No down–shift	O/D → 3rd	3		4	1			2
	3rd → 2nd	3		4	1			2
	2nd → 1st	3		4	1			2
No lock–up		3		4		1		2
No lock–up off		3		4		1		2
Shift point too high or too low		3		4				1
Up–shifts to 2nd while in L position Up–shifts to 3rd while in L position								
Up–shifts to O/D from 3rd while O/D switch is OFF								
Up–shifts to O/D from 3rd while engine is cold								
Harsh engagement	N → D		3			1	4	5
	Lock–up	3		4		1		2
	Any driving position	6	3	7		1	4	5
Slip or Shudder	Forward and reverse							
	Any particular position							
No engine braking								
Poor acceleration		4		5	6	7		3
No kick–down		3			4			2
*No pattern select								
Large shift shock or Engine stalls when starting off or stopping.						1		

* The automatic transmission in not shifted into the manual mode when the automatic transmission fluid temperature is too high.

Park/neutral position switch AT2–101	Kick–down switch circuit AT2–99	Stop light switch circuit AT2–103	Pattern select switch circuit AT2–105	O/D switch O/D OFF indicator light circuit AT2–108	O/D cancel signal circuit AT2–111	Engine coolant temp. sensor circuit EG–312	ECM AT2–60	On–Vehicle repair matrix chart AT2–66	OFF–Vehicle repair matrix chart AT2–68	No.5 solenoid circuit AT2–92	TRAC ECU BR–128	A/T fluid temp. sensor circuit AT2–70
								2	3	1		
								1	2			
6							8	5	7			
6							8	5	7			
6				1	7	8	11	9	10			
							6	5	-			
							6	5	-			
							7	5	6			
7	6	5				8	11	9	10			
		5					8	6	7			
			2				6	-	-		5	
1							2	-	-			
				1			2	-	-			
						1	4	2	3			
6							10	7	8		9	2
							7	5	6			
							11	8	9		10	2
								1	2			
								1	2			
								2	3	1		
	2						10	-	8	1	9	
	1						6	5	-			
			1				2	-	-			
		2					5	-	3		4	

Chapter 2. On–Vehicle Repair

(★ : A340E, A340F, A340H AUTOMATIC TRANSMISSION Repair Manual Pub. No.RM391U)

See Page / Suspect Area / Symptom		AT2–43	★	★	★	★	★	★
		Transmission control rod	Oil strainer	Parking lock pawl	Manual valve	Reverse control valve	1–2 shift valve	2–3 shift valve
Vehicle does not move in any forward position and reverse		1		3	2			
Vehicle does not move in R position						1		
Vehicle does not move in any particular position or positions (except R position)								
No up–shift	1st → 2nd						1	
	2nd → 3rd							1
	3rd → O/D							
No down–shift	O/D → 3rd							
	3rd → 2nd							1
	2nd → 1st						1	
No lock–up or No lock–up off								
Harsh engagement	N → D							
	Lock–up							
	N → R							
	N → L							
	1st → 2nd (D position)							
	1st → 2nd (2 position)							
	1st → 2nd → 3rd → O/D							
	2nd → 3rd							
	3rd → O/D							
	O/D → 3rd							
Slip or Shudder	Forward and Reverse	1	2					
	Particular position	1						
No engine braking	1st							
	2nd							
No kick–down							1	2

*	*	*	*	*	*	*	*	*	*	*	*	*	*	*	*
3–4 shift valve	Lock–up control valve	Lock–up relay valve	Accumulator control valve	Solenoid modulator valve	C_1 accumulator	Orifice control valve	Solenoid relay valve	C_2 accumulator	Low coast modulator valve	B_2 accumulator	2nd coast modulator valve	B_0 accumulator	C_0 accumulator	Pressure relief valve	OFF–Vehicle repair matrix chart
															4
															2
															1
															2
															2
1															2
1															
															2
	1	2													3
			1	2	3	4									5
	1	2					3								4
			1	3				2							4
									1						
			1	2						3					
			1	2							3				
			1	2											
			1	2				3							4
			1	2								3			4
			1	2									3		4
														3	4
															2
									1						2
											1				2

Chapter 3. Off–Vehicle Repair

(★ : A340E, A340F, A340H AUTOMATIC TRANSMISSION Repair Manual Pub. No.RM391U)

Symptom \ Suspect Area	See Page	★ O/D one–way clutch (F_O)	★ O/D brake (B_O)	★ O/D direct clutch (C_O)	★ O/D planetry gear unit	★ Torque converter clutch	★ 1st and reverse brake (B_3)
Vehicle does not move in any forward position and reverse position		1	2	3	4	5	
Vehicle does not move in R position				5			4
Vehicle does not move in:	D, 2 and L position						
	D and 2 positions						
	2 position						1
	L position						
No up–shift	1st → 2nd						
	2nd → 3rd						
	3rd → O/D		1				
No down–shift	2nd → 1st						
No lock–up or No lock–up off						1	
Harsh engagement	N → D						
	N → R						2
	2nd → 3rd						
	3rd → O/D		2	1	3		
	O/D → 3rd		1				
	Lock–up					1	
Slip or Shudder	Forward & Reverse (After warm–up)_	2		3		1	
	Forward & Reverse (Just after engine starts)					1	
	R position						2
	R position						
	2nd						
	3rd						
	O/D		1				
No engine braking	1st ~ 3rd			1			
	1st						1
	2nd						
Poor acceleration	All positions					1	
	O/D			1	2		
	Other than O/D		1				
	Other than 2nd						
	1st an 2nd						
	1st and R position						1
	R position						
Engine stalls when starting off or stopping						1	

*	*	*	*	*	*	*
2nd coast brake (B_1)	Direct clutch (C_2)	Front and rear planetary gear unit	Forward clutch (C_1)	No.2 one–way clutch (F_2)	2nd brake (B_2)	No.1 one–way clutch (F_1)
1	3	2				
			1			
				1		
2	3				1	
					1	2
	1					
1					2	
			1			
	1					
1						
	1					
			1	2		
2					1	3
	1					
1						
1					2	
	1					
			1			

CIRCUIT INSPECTION

DTC 38 A T Fluid Temperature Sensor Circuit

— CIRCUIT DESCRIPTION

The fluid temp. sensor converts fluid temp. into resistance values which is input into the ECM.

DTC No.	Diagnostic Trouble Code Detection Condition	Trouble Area
38	Either (a) or (b) are detected for 0.5 sec. or more. (a) Temp. sensor resistance less 79 (b) After the engine has been operating for 15 minutes or more, the resistance at the temp. sensor is more than 156 k	Harness or connector between A/T fluid temp. sensor and ECM A/T fluid temp. sensor ECM

WIRING DIAGRAM

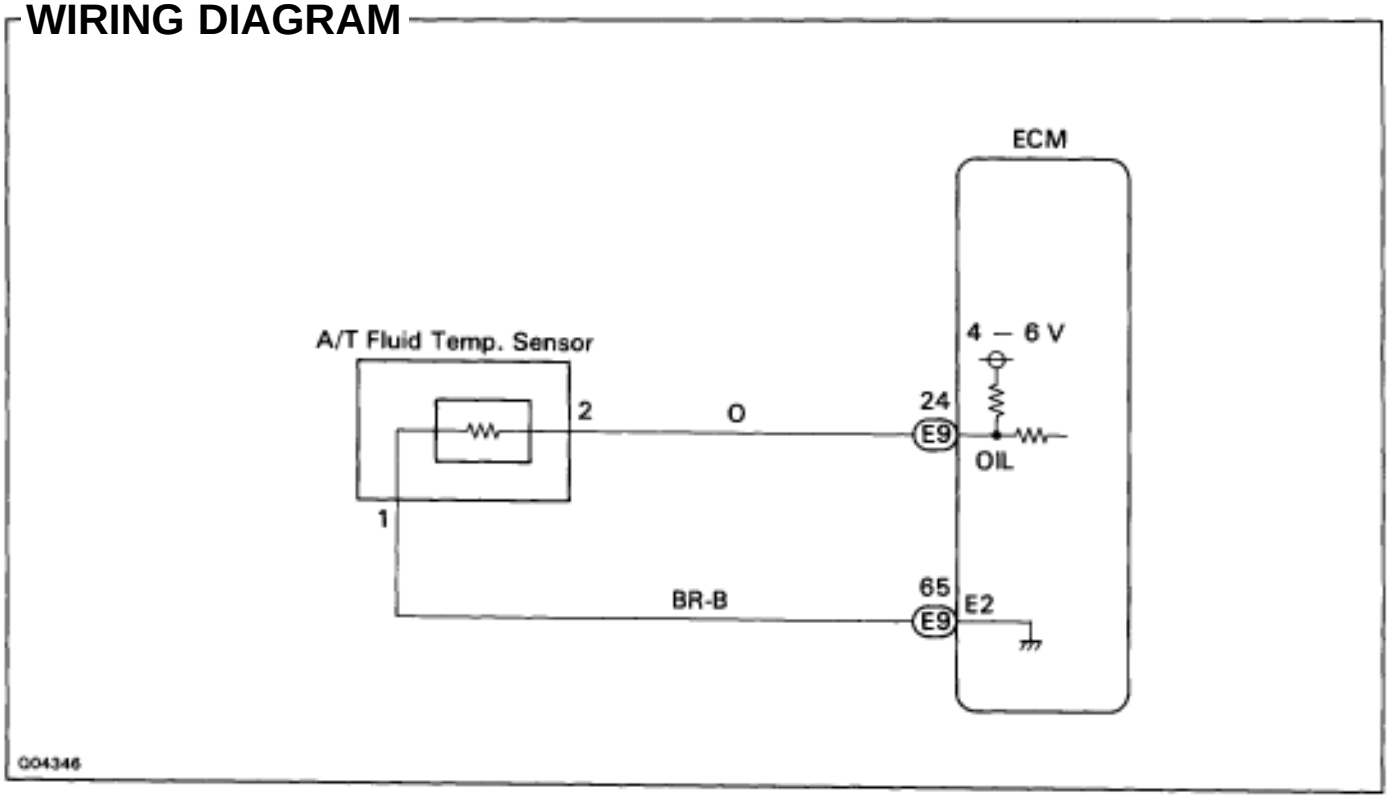

INSPECTION PROCEDURE

1 **Check A/T fluid temp. sensor.**

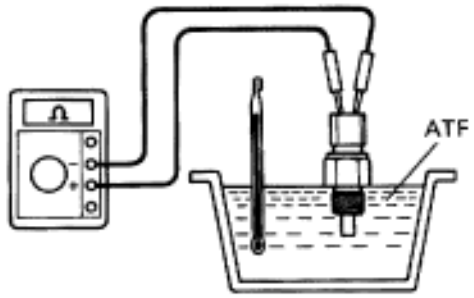

20˚C (68˚F) and 110˚C (230˚F).

Check sensor resistance

P Remove A/T fluid temp. sensor.

C Measure resistance between terminals of A/T fluid temp. sensor at 20˚C (68˚F) and 110˚C (230˚F).

OK **Resistance:**

20˚C (68˚F): Approx. 12.08 k.

110˚C (230˚F): Approx. 0.78 k.

OK

NG **Replace A/T fluid temp. sensor.**

2 **Check harness and connector between A/T fluid temp. sensor and ECM (See page IN–30).**

OK

NG **Repair or replace harness or connector.**

Check and replace ECM.

DTC 42 No.1 Vehicle Speed Sensor Signal Circuit

CIRCUIT DESCRIPTION

The No. 1 vehicle speed sensor outputs a 4–pulse signal for every revolution of the rotor shaft, which is rotated by the transmission output shaft via the driven gear. After this signal is converted into a more precise rectangular waveform by the waveform shaping circuit inside the combination meter, it is then transmitted to the engine control module. The ECM determines the vehicle speed based on the frequency of these pulse signals.

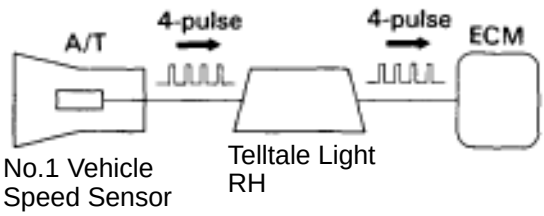

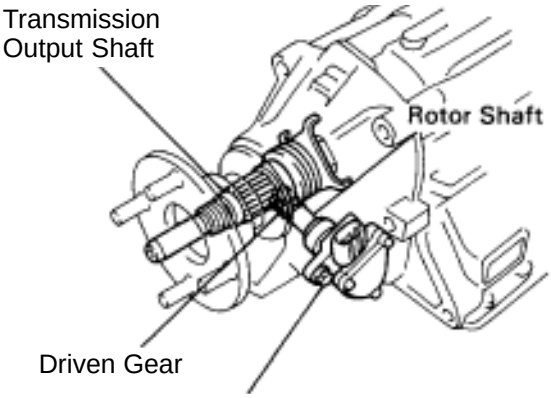

FI6643 Q04361

DTC No.	Diagnostic Trouble Code Detection Condition	Trouble Area
42	All conditions below are detected for 4 secs. or more. (2 trips detection logic)* (a) No No.1 vehicle speed sensor signal in 16 pulses of No.2 vehicle speed sensor signal. (b) Vehicle speed: 9 km/h (5.6 mph) or more (c) Park/neutral position switch: OFF (Other than P or N position)	No. 1 vehicle Speed sensor Telltale light RH Harness or connector between No. 1 vehicle speed sensor and ECM ECM

* See page AT2–58

HINT: In test mode, diagnostic trouble code 42 is output when vehicle speed is 5 km/h (3 mph) or below.

<Reference>
Waveform between terminals SP1 and E2 when vehicle speed is approx. 20 km/h (12 mph).

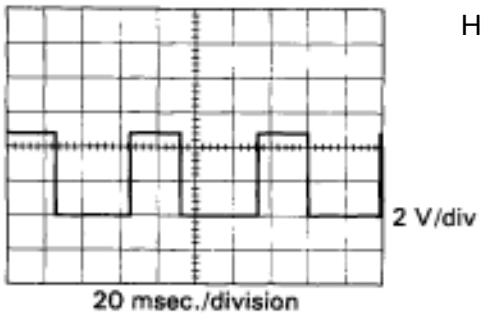

V01496

HINT: As the vehicle's speed increases, the signal output from SP1 increases.

WIRING DIAGRAM

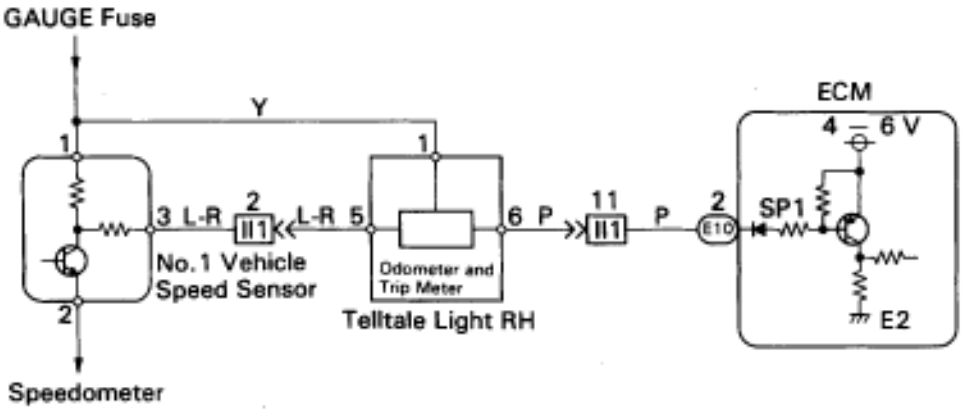

INSPECTION PROCEDURE

1 **Check voltage between terminal SP1 of ECM connector and body ground.**

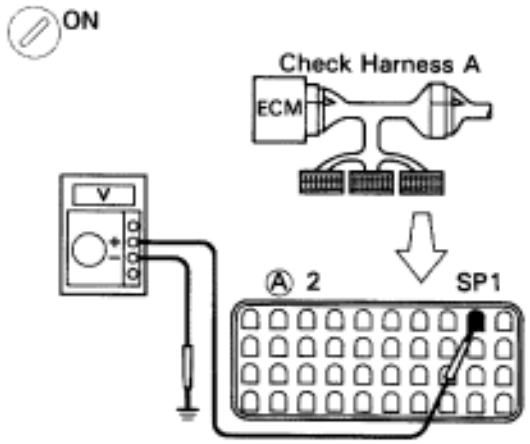

P
1. Shift the shift lever to N position
2. Jack up one of the rear wheels.
3. Connect the Check Harness A. See page EG–510)
(1) Disconnect power steering ECU connector and cruise control ECU connector.
(5) Turn ignition switch ON.

C Measure voltage between terminal SP1 of ECM connector and body ground when the wheel is turned slowly.

OK **Voltage is generated intermittently.**

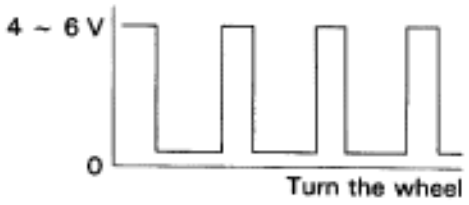

NG

OK → **Check and replace ECM.**

2 **Check operation of odometer and trip meter (telltale light RH (See page BE–48)).**

NG

OK → **Repair or replace harness or connector between ECM and telltale light RH.**

Go to 3 .

3 **Check operation of No.1 vehicle speed sensor (see page BE–46).**

NG

Replace No.1 vehicle speed sensor.

OK

Repair or replace harness or connector between telltale light RH and No.1 vehicle speed sensor.

DTC 46 No.4 Solenoid Valve Circuit (For Accumulator Back Pressure Modulation)

CIRCUIT DESCRIPTION

The No.4 solenoid valve controls the hydraulic pressure acting on the brakes and clutches of the planetary gear units when gears are shifted and performs smooth gear shifting.
The ECM determines optimum operating pressure according to the signals from the throttle position sensor, vehicle speed sensor and O/D clutch speed sensor and controls the volume of current flow to the solenoid valve.
The amount of electric current to the solenoid is controlled by the (*) duty ratio of ECM output signals, causing momentary change to the hydraulic pressure acting on the clutches during gear shifting. When the duty ratio is high, the hydraulic pressure acting on the clutches is now.

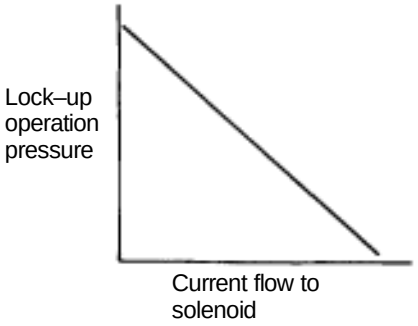

(*) Duty Ratio
The duty ratio is the ratio of the period of continuity in one cycle.
For example, if A is the period of continuity in one cycle, and B is the period of non–continuity, then

$$\text{Duty Ratio} = \frac{A}{A + B} \times 100\ (\%)$$

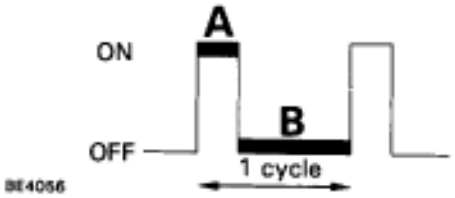

DTC No.	Diagnostic Trouble Code Detection Condition	Trouble Area
46	All conditions below are detected for 1 sec. or more. (2 trips detection logic)* (a) ECM outputs duty signal to No.4 solenoid in 90% or higher duty ratio. (b) Current to No.4 solenoid: 330 ± 100 mA or less (O/D OFF indicator light doesn't blink)	No. 4 solenoid valve Harness or connector between No.4 solenoid valve and ECM ECM

* See page AT2–58

<Reference>
Waveform between terminals SLN and E1 when engine is idling.

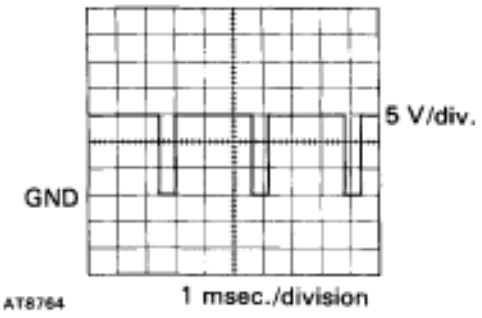

Waveform between terminals SLN and E1 during shift change.

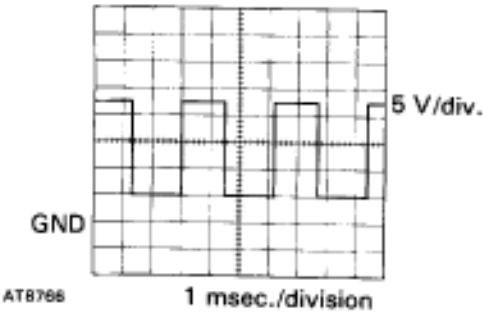

WIRING DIAGRAM

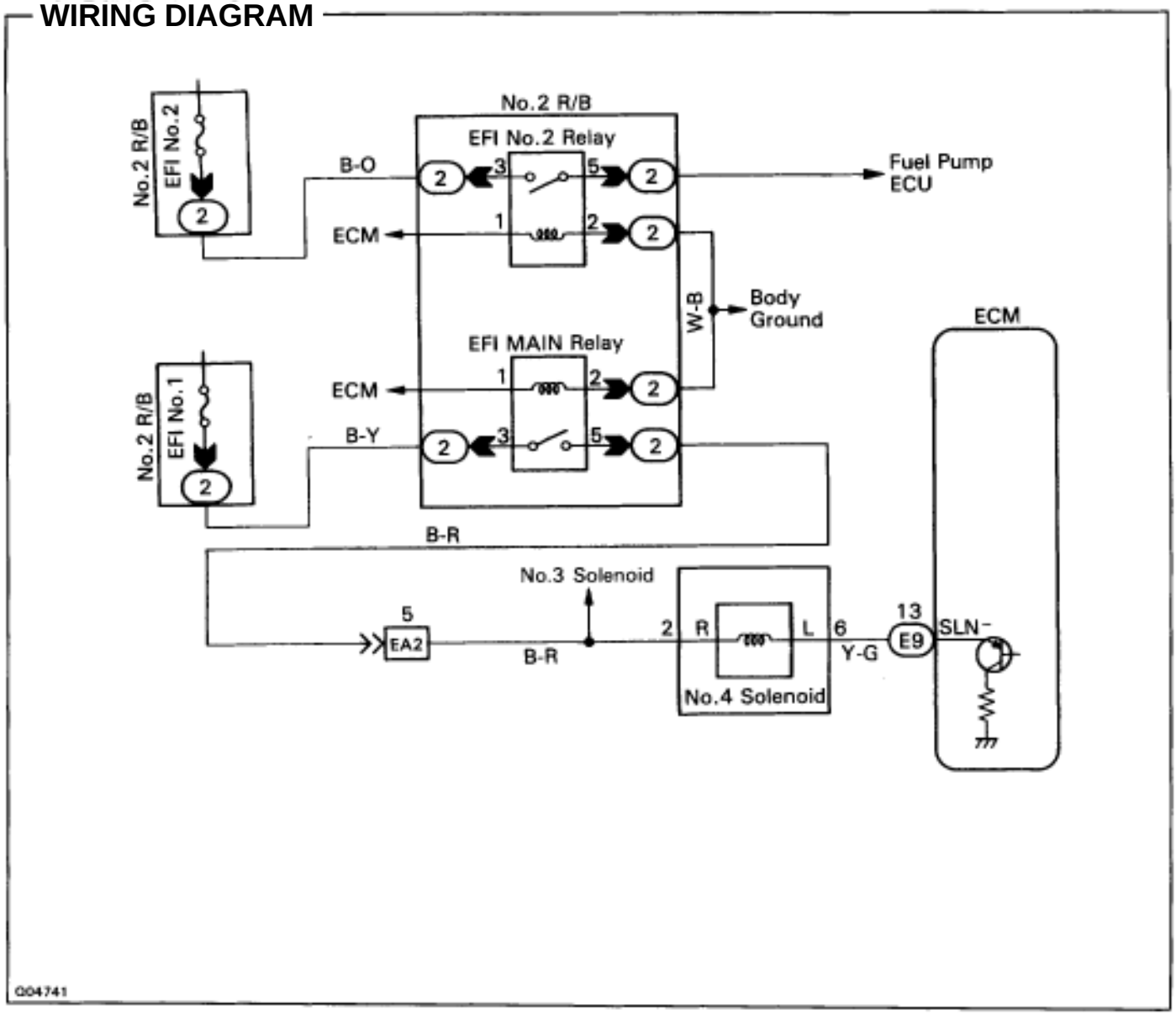

INSPECTION PROCEDURE

1 Check No.4 solenoid valve.

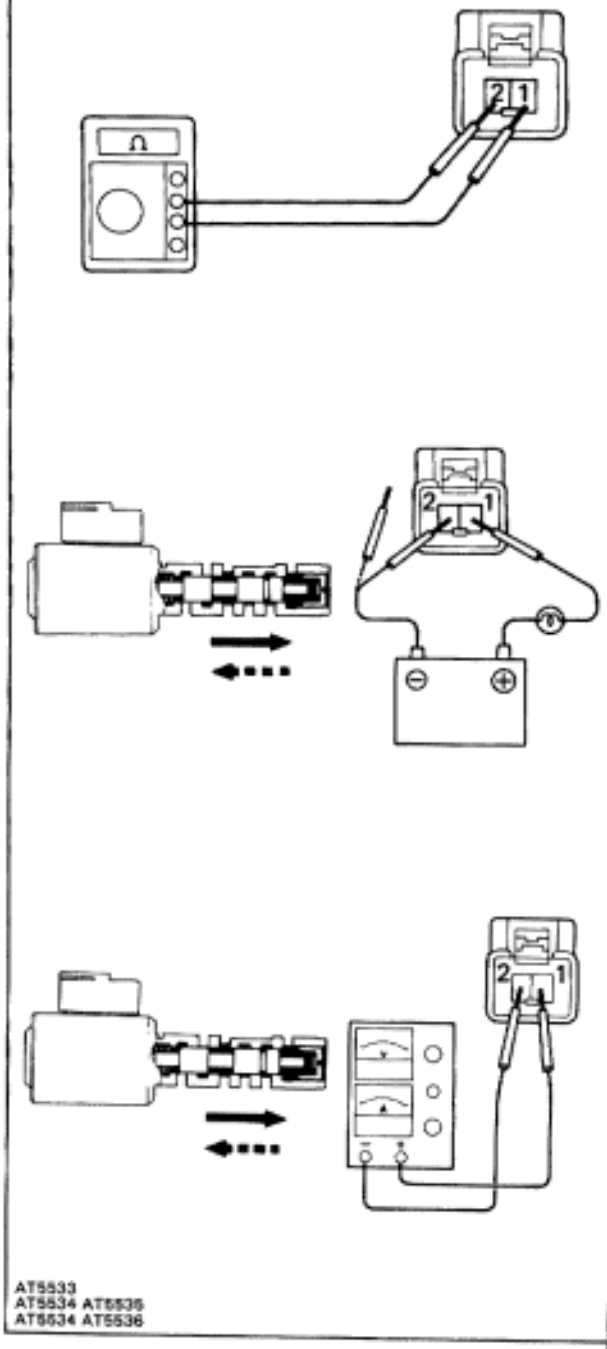

AT5533
AT5534 AT5535
AT5534 AT5536

Check solenoid resistance

P
1. Jack up the vehicle.
2. Remove oil pan.
3. Disconnect the connector

C Measure resistance between terminal 1 and 2 of solenoid connector.

OK **Resistance: 5.1 — 5.5 .**

Check solenoid operation

C Connect positive ⊕ lead with an 8 — 10 W bulb to terminal 1 of solenoid connector and negative ⊖ lead to terminal 2, then check the movement of the valve.

OK

When battery positive voltage is applied.	Valve moves in ➡ direction in illustration at left.
When battery positive voltage is cut off.	Valve moves in ⬅ direction in illustration at left.

<Reference>

Check solenoid's operation

C
1. Prepare a variable power supply.
2. Connect positive ⊕ lead of the variable power supply to terminal 1 of solenoid connector and negative ⊖ lead to terminal 2.
3. Check the movement of the valve when the voltage is gradually increased. (A current greater than 1A should not be supplied.)

OK **As the voltage is increased, the valve should move slowly in the ➡ direction.**

C 4. Check the movement of the valve when the volt age is cut off.

OK **The valve should return in the ⬅ direction.**

OK

NG **Replace No.4 solenoid valve.**

Go to step [2].

2 **Check harness and connector between battery and No.4 solenoid valve, No.4 solenoid valve and ECM (See page IN–30).**

OK

NG → **Repair or replace harness or connector.**

Proceed to next circuit inspection shown on matrix chart (See page AT2–64). However, when diagnostic trouble code 46 is displayed, check and replace ECM.

DTC 61 No.2 Vehicle Speed Sensor Circuit

CIRCUIT DESCRIPTION

The No. 2 vehicle speed sensor detects the rotation speed of the transmission output shaft and sends signals to the ECM. The ECM determines the vehicle speed based on these signals. An AC voltage is generated in the No.2 vehicle speed sensor coil as the rotor mounted on the output shaft rotates, and this voltage is sent to the ECM.
The gear shift point and lock–up timing are controlled by the ECM based on the signals from this vehicle speed sensor and the throttle position sensor signal.
If the No.2 vehicle speed sensor malfunctions, the ECM uses input signals from the No.1 vehicle speed sensor as a back–up signal.

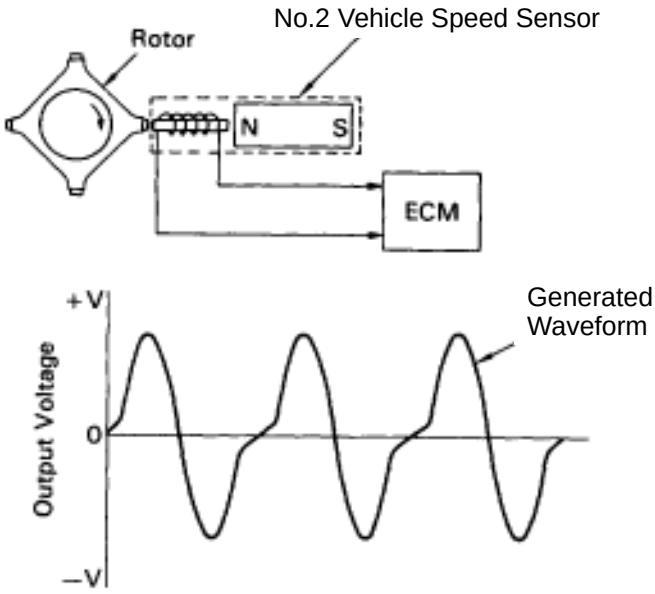

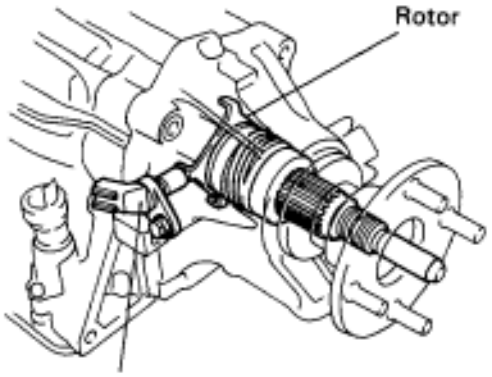

AT5605
AT5606 G04362

DTC No.	Diagnostic Trouble Detection Condition	Trouble Area
61	All conditions below are detected. (2 trips detection logic)* (a) No No.2 vehicle speed sensor signal in 4 pulses of No. 1 vehicle speed sensor signal. (b) Vehicle speed: 9 km/h (5.6 mph) or more for 4 secs. or more. (c) Park/neutral position switch: OFF (Other than P or N position)	No. 2 vehicle speed sensor Harness or connector between No.2 vehicle speed sensor and ECM ECM

*: See page AT2–58
<Reference>
Waveform between terminals $SP2^+$ and $SP2^-$ when vehicle speed is approx. 60 km/h (37 mph).

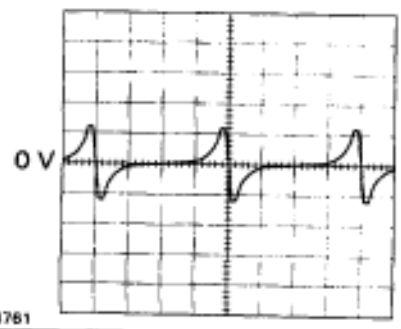

WIRING DIAGRAM

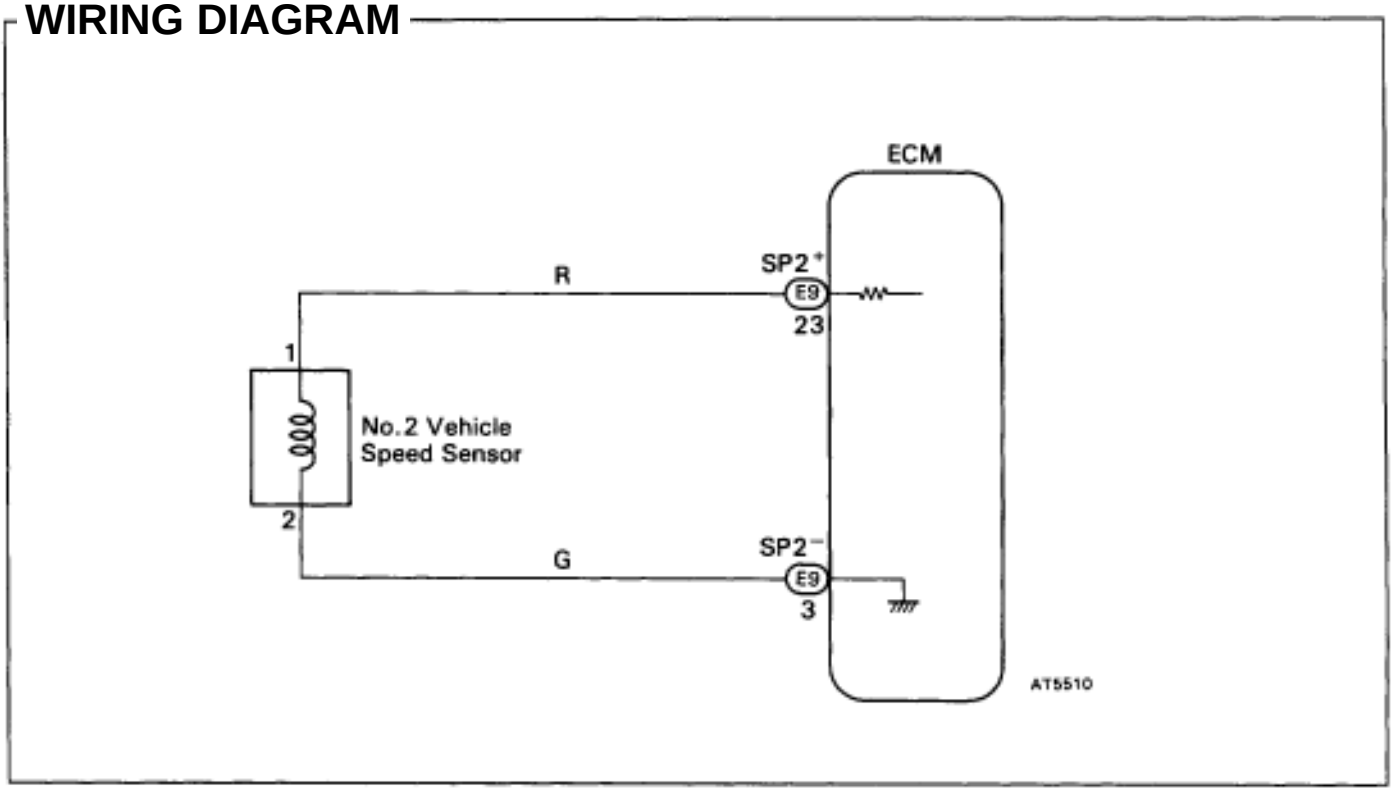

INSPECTION PROCEDURE

1 **Check resistance between terminals SP2+ and SP2− of ECM connector.**

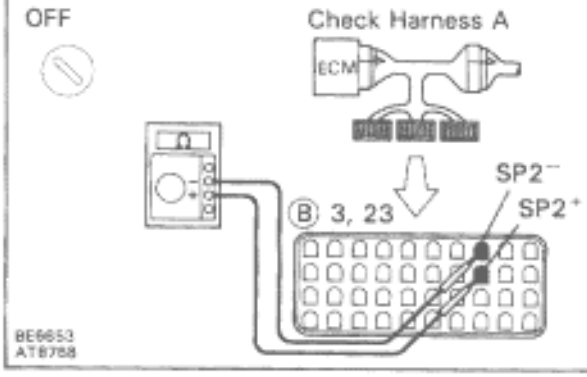

P Connect the Check Harness A to the ECM. (See page EG–510).

C Check resistance between terminals SP2+ and SP2− of ECM.

OK **Resistance: 560 — 680 .**

NG

OK → **Proceed to next circuit inspection shown on matrix chart (See page AT2–64).**

Go to step [2].

2 Check No.2 vehicle speed sensor.

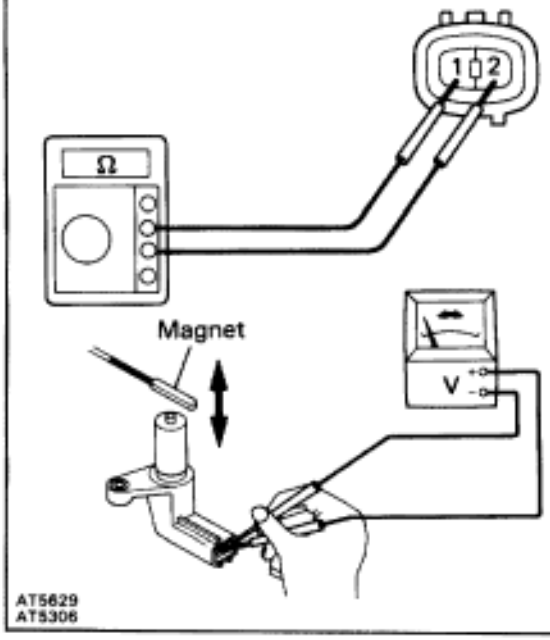

P Remove No.2 vehicle speed sensor from transmission (See page AT2–16).

C Measure resistance between terminals 1 and 2 of No.2 vehicle speed sensor.

OK **Resistance: 560 — 680 .**

<Reference>

Check the speed sensor's function

C Check voltage between terminals 1 and 2 of the speed sensor when a magnet is put close to the front end of the speed sensor then taken away quickly.

OK **Voltage is generated intermittently.**

Hint The voltage generated is extremely low.

NG **Replace No.2 vehicle speed sensor.**

OK

Check and repair harness and connector between ECM and No.2 vehicle speed sensor (See page IN–30).

DTC 62 63 No.1 No.2 Solenoid Valve Circuit

— CIRCUIT DESCRIPTION

Shifting from 1st to O/D is done in combination with ON and OFF of the No.1 and No.2 solenoid valves controlled by ECM. If an open or short circuit occurs in either of the solenoid valves, the ECM controls the remaining normal solenoid to allow the vehicle to be operated smoothly (Fail safe function).

Fail Safe Function

If either of the solenoid valve circuits develops a short or an open, the ECM turns the other solenoid ON and OFF to shift the gear positions shown in the table below. If both solenoids malfunction, the hydraulic control is not made electronically and can only be operated manually.

Manual shifting, as shown in the following table must be done (In the case of a short circuit, the ECM stops sending current to the short circuited solenoid).

Position	NORMAL			NO 1 SOLENOID MALFUNCTIONING			NO 2 SOLENOID MALFUNCTIONING			BOTH SOLENOIDS MALFUNCTIONING
	Solenoid valve		Gear	Solenoid valve		Gear	Solenoid valve		Gear	Gear when shift selector is manually operated
	No.1	No.2		No.1	No.2		No.1	No.2		
D	ON	OFF	1st	X	ON	3rd	ON	X	1st	O/D
	ON	ON	2nd	X	ON	3rd	OFF	X	O/D	O/D
	OFF	ON	3rd	X	ON	3rd	OFF	X	O/D	O/D
	OFF	OFF	O/D	X	OFF	O/D	OFF	X	O/D	O/D
2 (S)	ON	OFF	1st	X	ON	3rd	ON	X	1st	3rd
	ON	ON	2nd	X	ON	3rd	OFF	X	3rd	3rd
	OFF	ON	3rd	X	ON	3rd	OFF	X	3rd	3rd
L	ON	OFF	1st	X	OFF	1st	ON	X	1st	1st
	ON	ON	2nd	X	ON	2nd	ON	X	1st	1st

X: Malfunctions

Check the No.1 solenoid when diagnostic trouble code 62 is output and check the No.2 solenoid when diagnostic trouble code 63 is output.

DTC No.	Diagnostic Trouble Code Detection Condition	Trouble Area
62, 63	(a) Solenoid resistance is 8 or lower (short circuit) when solenoid is energized. (b) Solenoid resistance is 100 k or higher (open circuit) when solenoid is not energized. The ECM checks for an open or short circuit in the No.1 and No.2 solenoid circuit when it changes gear position. The ECM records DTC 62 or 63 if condition (a) or (b) is detected once, but it does not blink the O/D OFF indicator light. After the ECM detects the condition (a) or (b) continuously 8 times or more, it causes the O/D OFF indicator light to blink until condition (a) or (b) disappears. After that, if the ECM detects condition (a) or (b) one, it starts blinking the O/D OFF indicator light again.	Solenoid valve Harness or connector between sole–noid and ECM ECM

WIRING DIAGRAM

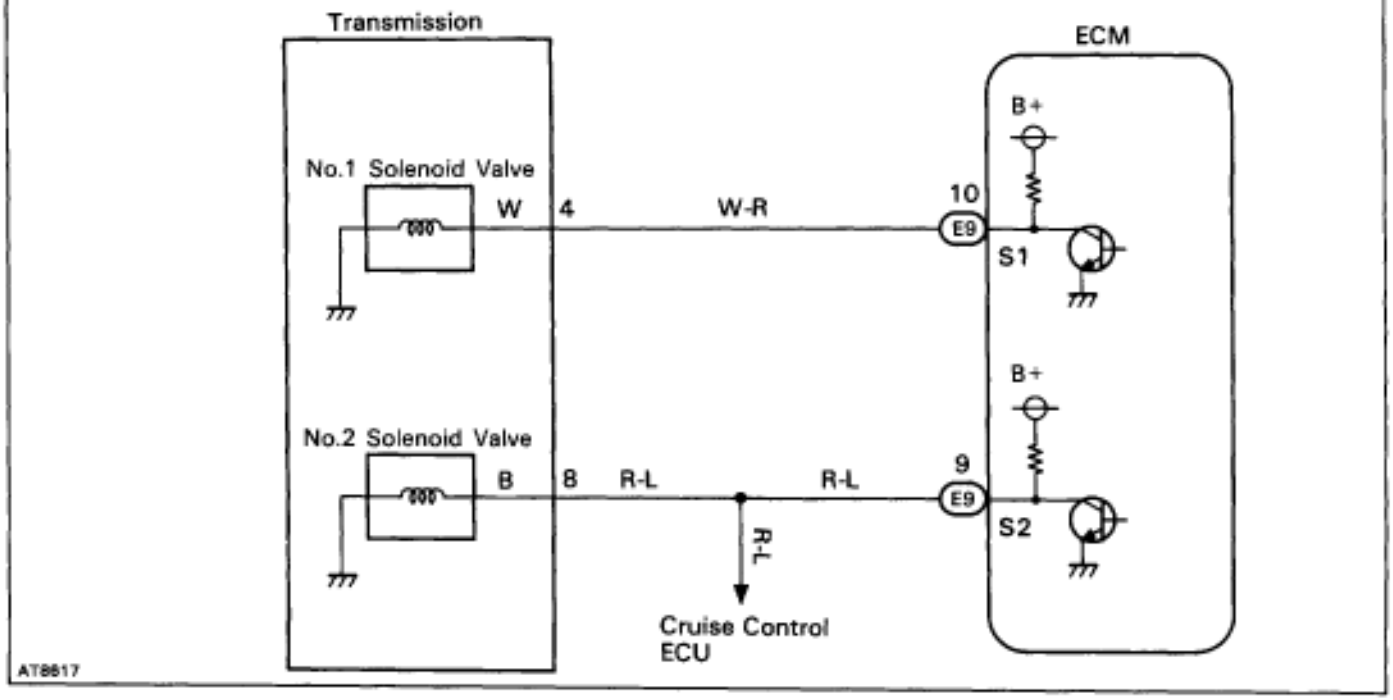

INSPECTION PROCEDURE

1 Check No.1 No.2 solenoid valves.

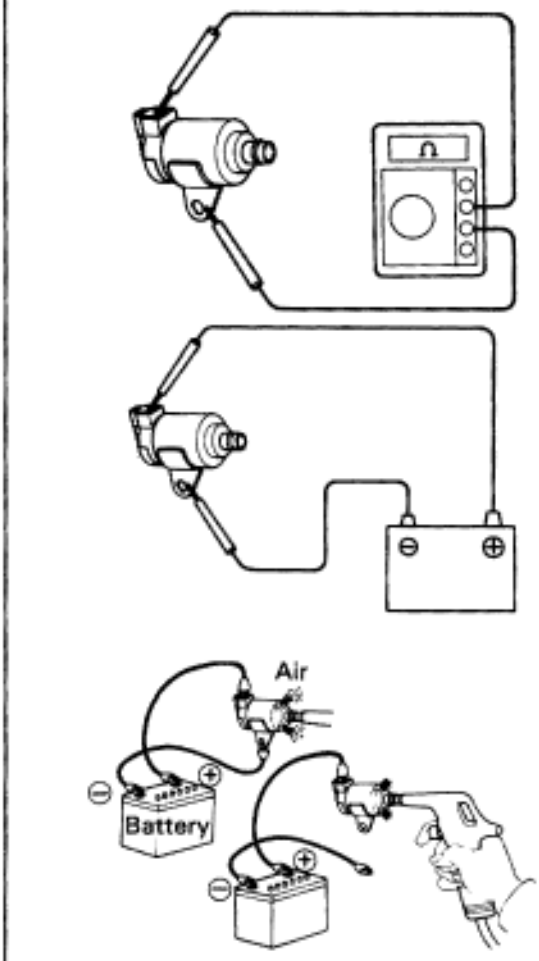

AT5530
AT5531
AT5628

Electrical Check

P
1. Jack up the vehicle.
2. Remove the oil pan.
3. Disconnect the solenoid connector.

C Measure resistance between the solenoid connector and solenoid body.

OK **Resistance: 10 — 16 .**

C Connect positive × lead to terminal of solenoid connector, negative ⊕ lead to solenoid body.

OK **The solenoid makes an operating noise.**

Mechanical Check

P
1. Remove the oil pan.
2. Remove the No.1 and No.2 solenoid valves.

C
1. Applying 490 kPa (5 kgf/cm^2, 71 psi) of compressed air, check that the solenoid valves do not leak air.
2. When battery positive voltage is supplied to the solenoid valves, check that the solenoid valves open.

OK

NG **Replace solenoid valve.**

2 Check harness and connector between ECM and solenoid (See page IN–30).

OK

NG **Repair or replace harness or connector.**

Proceed to next circuit inspection shown on matrix chart (See page AT2–64). However, when diagnostic trouble code 62 or 63 is displayed, check and replace ECM.

DTC 64 No. 3 Solenoid Valve Circuit (For Lock–up Control Pressure Modulation)

CIRCUIT DESCRIPTION

The No.3 solenoid valve is provided for lock–up operations. The lock–up operation pressure is controlled by the linear solenoid for smooth engagement.
The amount of current flow to the solenoid is controlled by the duty ratio (See page AT2–75) of ECM output signal. The higher the duty ratio becomes, the higher the lock–up hydraulic pressure becomes during the lock–up operation. If the malfunction occurs in this circuit and diagnostic trouble code 64 is stored in memory, but the O/D OFF indicator light does not blink.

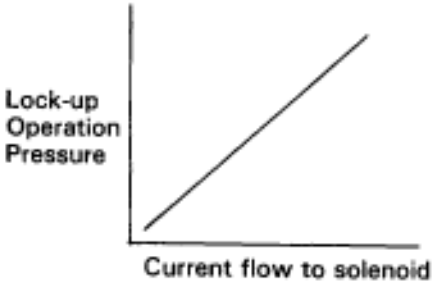

DTC No.	Diagnostic Code Detection Condition	Trouble Area
64	All conditions below are detected for 1 sec. or more. (2 trips detection logic)* (a) ECM outputs duty signal to No.3 solenoid in 90% or higher duty ratio. (b) Current to No.3 solenoid: 450 ± 100 mA or less.	No.3 solenoid valve Harness or connector between No.3 solenoid valve and ECM ECM

*: See page AT2–58

<Reference>

Waveform between terminals SLN– and E1 when engine is idling.

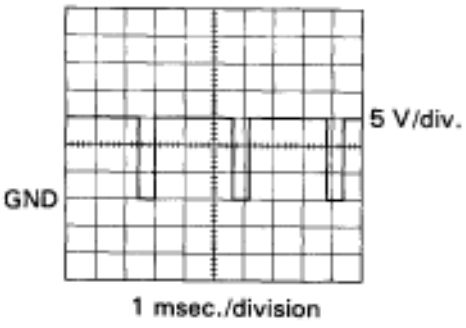

AT8764

Waveform between terminals SLN– and E1 during shift change.

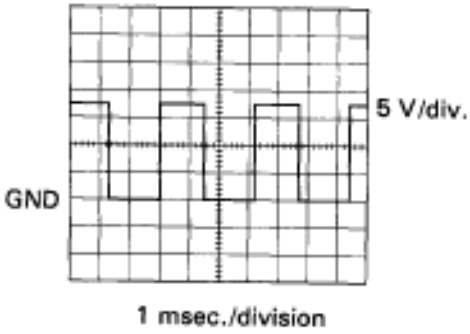

AT8765

WIRING DIAGRAM

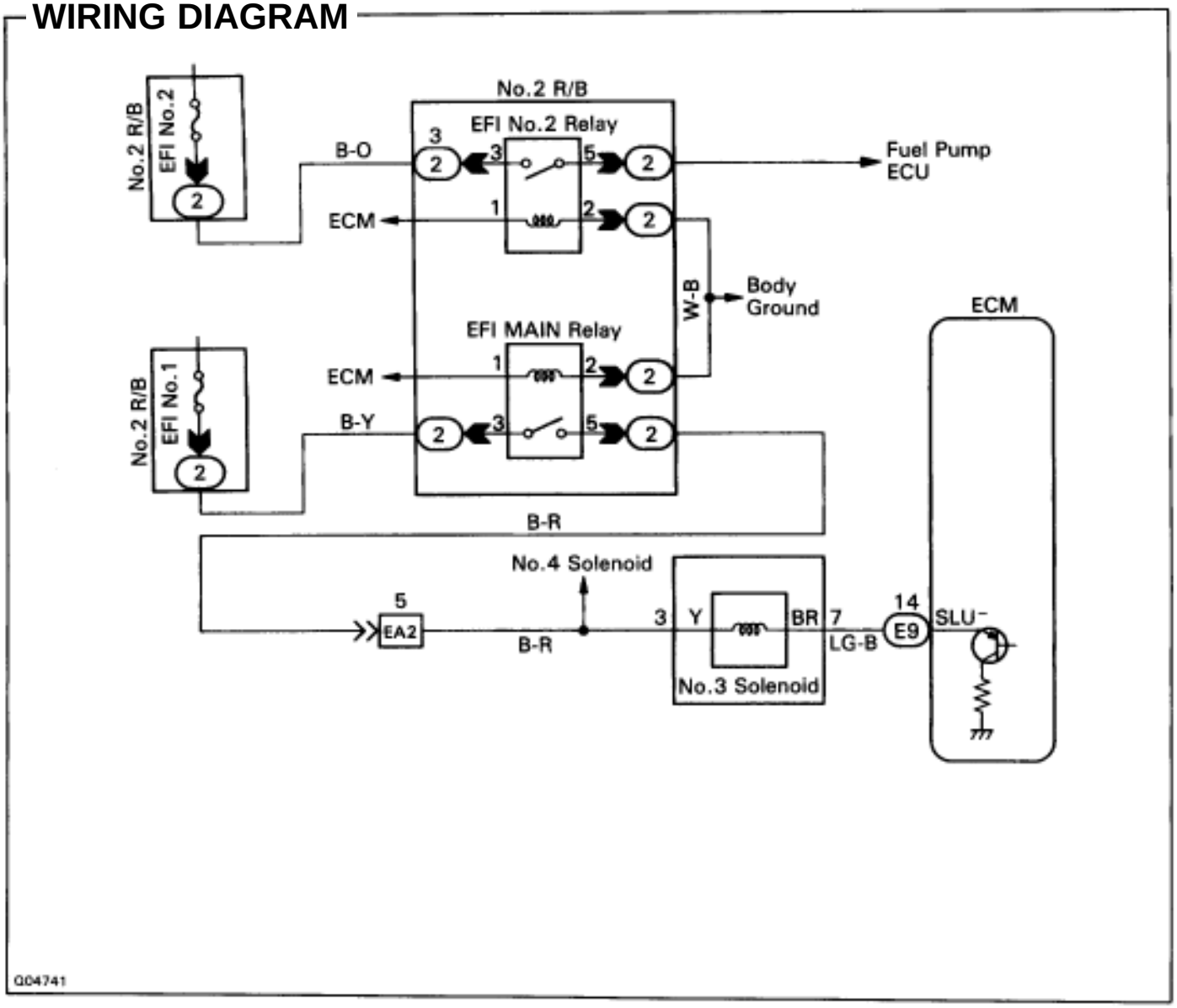

INSPECTION PROCEDURE

1 Check No.3 solenoid valve.

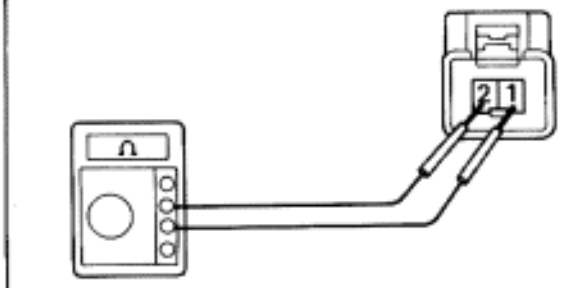

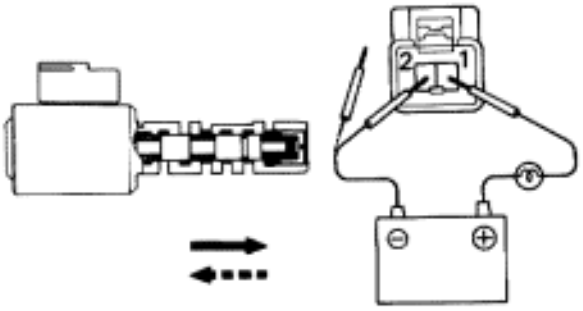

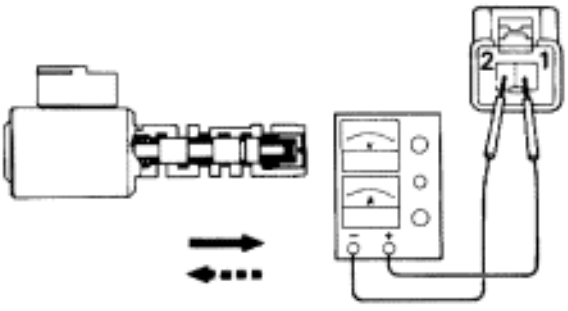

AT5533
AT5534 AT5535
AT5534 AT5536

Check solenoid resistance

P
1. Jack up the vehicle.
2. Remove the oil pan.
3. Disconnect the solenoid connector

C Measure resistance between terminal 1 and 2 of the solenoid connector.

OK **Resistance: 3.5 — 3.9 .**

Check solenoid operation

C Connect positive × lead with an 8 — 10 W bulb to terminal 1 of solenoid connector and negative ⊕ lead to terminal 2, then check the movement of the valve.

OK

When battery positive voltage is applied.	Valve moves in ➡ direction in illustration at left.
When battery positive voltage is cut off.	Valve moves in ⬅ direction in illustration at left.

<Reference>

Check solenoid's operation

C
1. Prepare a variable power supply.
2. Connect positive × lead of the variable power supply to terminal 1 of solenoid connector and negative ⊕ lead to terminal 2.
3. Check the movement of the valve when the voltage is gradually increased. (A current greater than 1A should not be supplied.)

OK **As the voltage is increased, the valve should move slowly in the ➡ direction.**

C 4. Check the movement of the valve when the voltage is cut off.

OK **The valve should return in the ⬅ direction.**

OK

Go to step 2.

NG **Replace No.3 solenoid valve.**

2 **Check harness and connector between battery and No.3 solenoid valve, No.3 solenoid valve and ECM (See page IN–30).**

OK

NG **Repair or replace harness or connector.**

Proceed to next circuit inspection shown on matrix chart (See page AT2–64). However, when diagnostic trouble code 64 is displayed, check and replace ECM.

DTC 67 O D Direct Clutch Speed Sensor Circuit

CIRCUIT DESCRIPTION

O/D Direct Clutch Drum

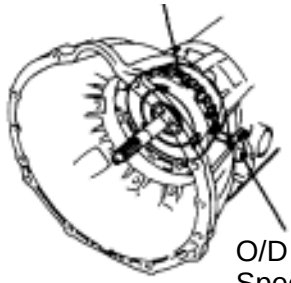

AT5609

This sensor detects the rotation speed of the O/D input shaft from the rotation of the O/D direct clutch drum.
Its construction is the same as that of the No.2 vehicle speed sensor (See page AT2–79).
By comparing the O/D direct clutch speed signal and the No.2 vehicle speed sensor signal, the ECM detects the shift timing of the gears and appropriately controls the engine torque and hydraulic pressure in response to various conditions, thus performing smooth gear shift.

DTC No.	Diagnostic Trouble Code Detection Condition	Trouble Area
67	All conditions below are detected for 4 secs. or more. (2 trips detection logic)* (a) Gear position: 1st, 2nd or 3rd (b) T/M input shaft rpm: 1000 rpm or more (c) T/M output shaft rpm: Less than 300 rpm (d) NSW OFF (other than P or N position)	O/D direct clutch speed sensor Harness or connector between O/D direct clutch speed sensor and ECM ECM

*: See page AT2–58

<Reference>

Waveform between terminals NCO^{+} and NCO^{-} during engine idling.

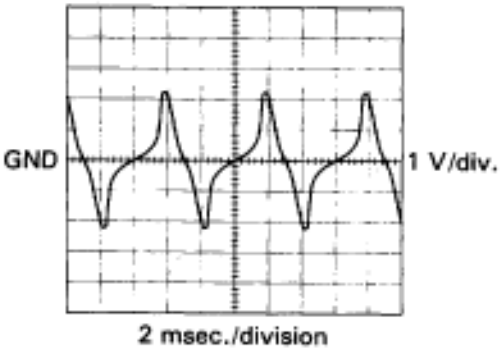

AT8763

WIRING DIAGRAM

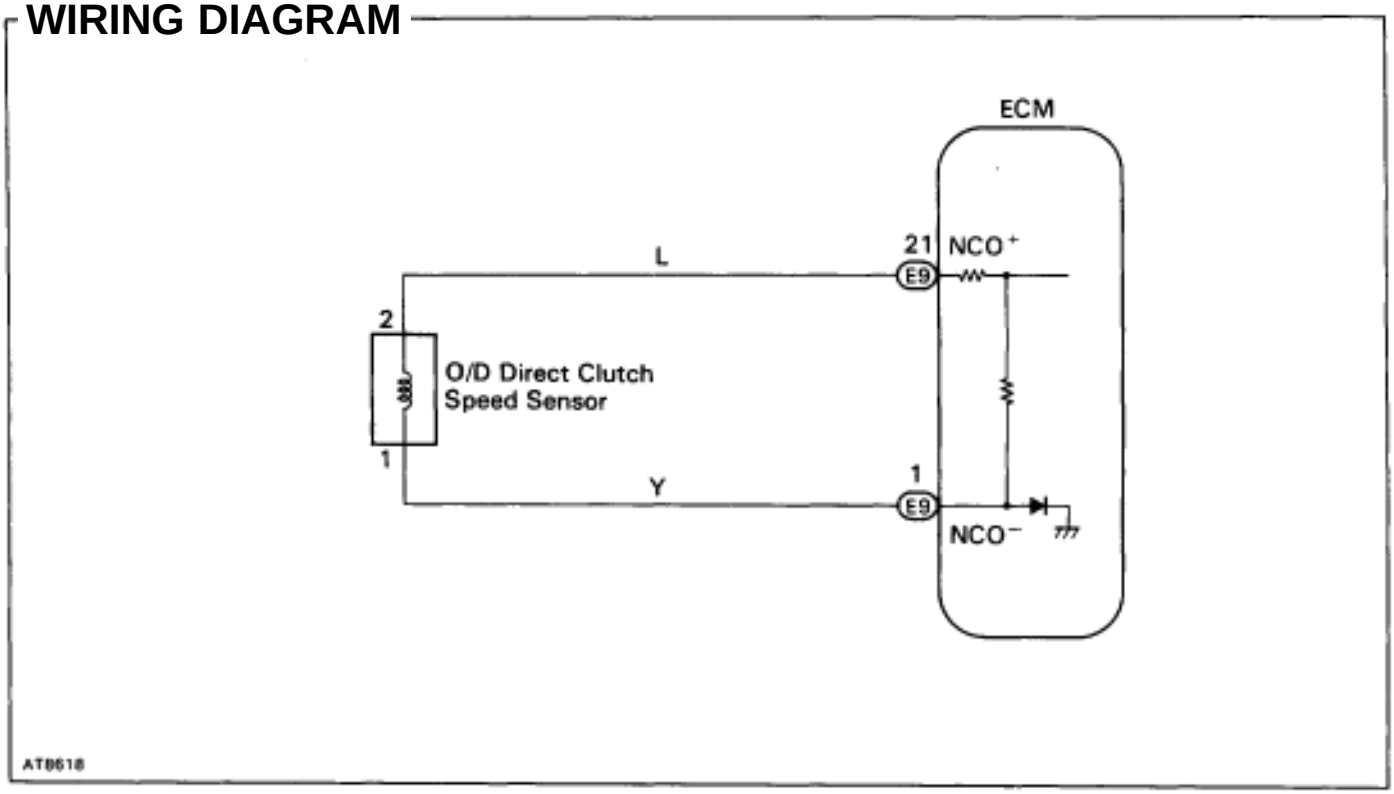

INSPECTION PROCEDURE

1 **Check resistance between terminals NCO+ and NCO− of ECM.**

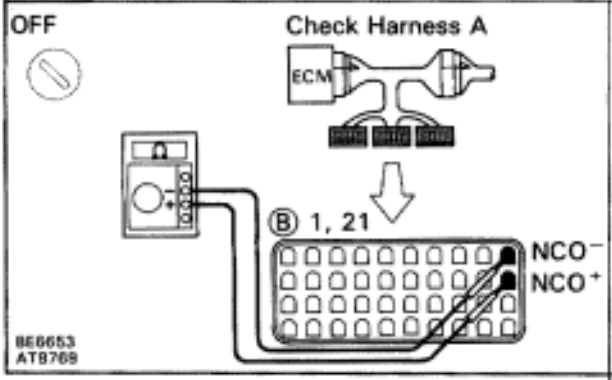

P Connect the Check Harness A to the ECM (See page EG–510).

C Check Resistance between terminals NCO+ and NCO− of ECM.

OK **Resistance: 560 — 680**

OK → **Proceed to next circuit inspection shown on matrix chart (See page AT2–64). However, when diagnostic trouble code 67 is displayed, check and replace ECM.**

NG → G to **2**.

2 Check O/D direct clutch speed sensor.

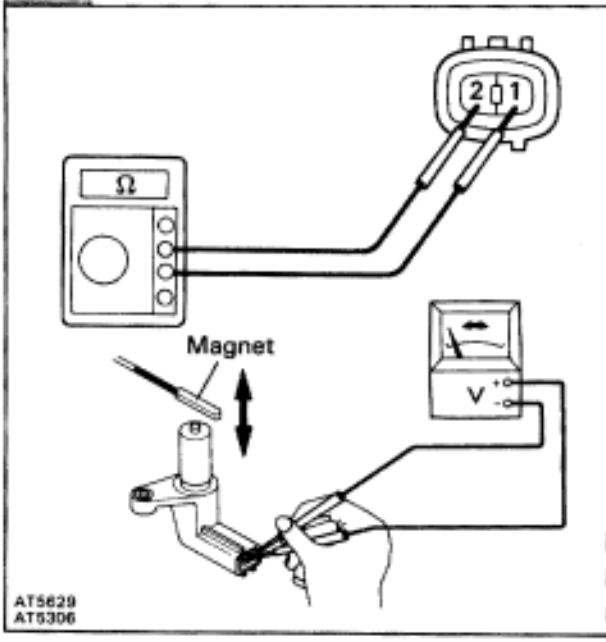

P Remove the O/D direct clutch speed sensor from the transmission (See page AT2–17).

C Measure resistance between the terminals 1 and 2 of the O/D direct clutch speed sensor.

OK **Resistance: 560 — 680**

<Reference>
Check the speed sensor function

C Check voltage between the terminals 1 and 2 of the speed sensor when a magnet is put close to the front end of the speed sensor then taken away quickly.

OK **Voltage is generated intermittently.**

Hint The voltage generated is extremely low.

OK

NG **Replace O/D direct clutch speed sensor.**

Check and repair harness and connector between ECM and O/D direct clutch speed sensor (See page IN–30).

DTC 77 No.5 Solenoid Valve Circuit (For Line Pressure Modulation)

CIRCUIT DESCRIPTION

The throttle pressure that is applied to the primary regulator valve (which modulates line pressure) causes the No.5 solenoid valve, under electronic control, to precisely and minutely modulate and generate line pressure according to the accelerator pedal effort, or engine power output detected. This reduces the fluctuation of line pressure and provides smooth shifting characteristics.
Upon receiving the throttle valve opening angle signal, ECM controls the line pressure by sending a predetermined duty ratio to the No.5 solenoid valve located in the valve body, activating the solenoid valve, modulating the line pressure, generating throttle pressure.

DTC No.	Diagnostic Trouble Code Detection Condition	Trouble Area
77	Any of condition below are detected. (2 trip detection logic) SLT⁻ terminal: 0 V or 5 V for 1 sec. or more.	No.5 solenoid valve Harness or connector between No.5 solenoid valve and ECM ECM

WIRING DIAGRAM

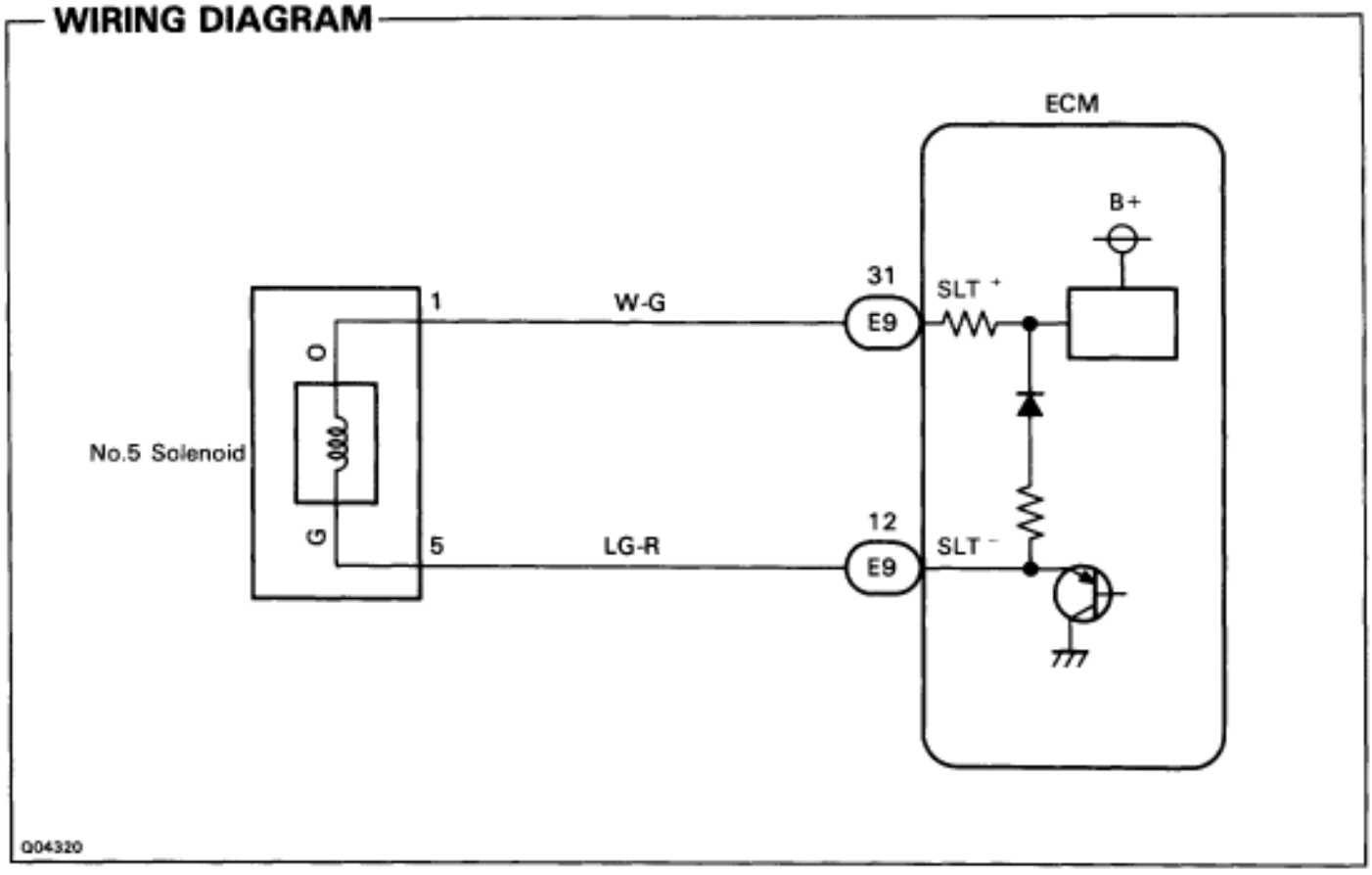

INSPECTION PROCEDURE

1 Check No.5 solenoid valve.

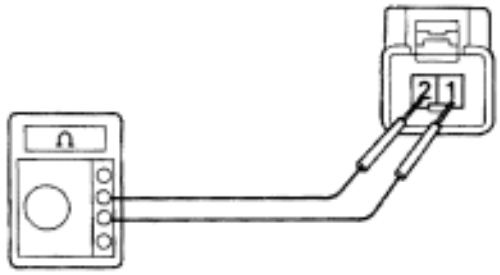

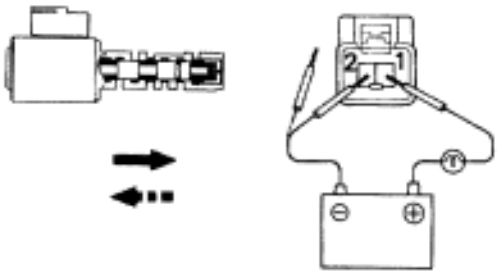

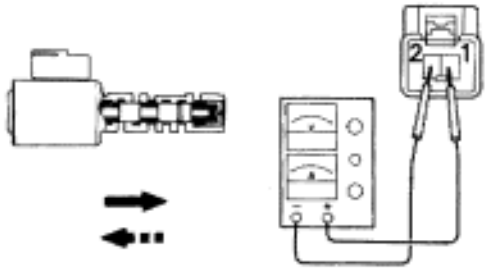

AT5533
AT5534 AT5535
AT5534 AT5536

Check solenoid resistance

P
1. Jack up the vehicle.
2. Remove the oil pan.

C
1. Disconnect the solenoid connector.
2. Measure resistance between terminals 1 and 2 of solenoid connector.

OK **Resistance: 3.6 — 4.0 Ω.**

Check solenoid operation

C Connect positive × lead with an 8 — 10 W bulb to terminal 1 of solenoid connector and negative ⊕ lead to terminal 2, then check the movement of the valve.

OK

When battery positive voltage is applied.	Valve moves in ➡ direction in illustration at left.
When battery positive voltage is cut off.	Valve moves in ⬅ direction in illustration at left.

<Reference>

Check solenoid operation

C
1. Prepare a variable power supply.
2. Connect positive × lead of the variable power supply to terminal 1 of solenoid connector and negative ⊕ lead to terminal 2.
3. Check the movement of the valve when the voltage is gradually increased. (A current greater than 1A should not be supplied.)

OK **As the voltage is increased, the valve should move slowly in the ➡ direction.**

C 4. Check the movement of the valve when the voltage is cut off.

OK **The valve should return in the ⬅ direction.**

OK

NG **Replace No.5 solenoid valve.**

Go to step 2.

2 **Check harness and connector between battery and No.5 solenoid valve, No.5 solenoid valve and ECM (See page IN–30).**

NG → **Repair or replace harness or connector.**

OK

Proceed to next circuit inspection shown on matrix chart (See page AT2–64). However, when diagnostic trouble code 77 is displayed, check and replace ECM.

DTC 89 TRAC ECU Circuit

— CIRCUIT DESCRIPTION

When the transmission is in the shift up or stall condition, the TRAC ECU sends a sub–throttle valve close signal to the sub–throttle actuator.

DTC No.	Diagnostic Code Detection Condition	Trouble Area
89	All conditions below are detected 5 secs. or more. (a) No.1 vehicle speed sensor: 9 km/h (5.6 mph) or more (b) Mirror check of TRAC ECU input signal is abnormal. (c) TRAC ECU input signal does not inform to ECM. (d) TRAC ECU input signal order is abnormal.	Harness or connector between TRAC ECU and ECM TRAC ECU

— WIRING DIAGRAM

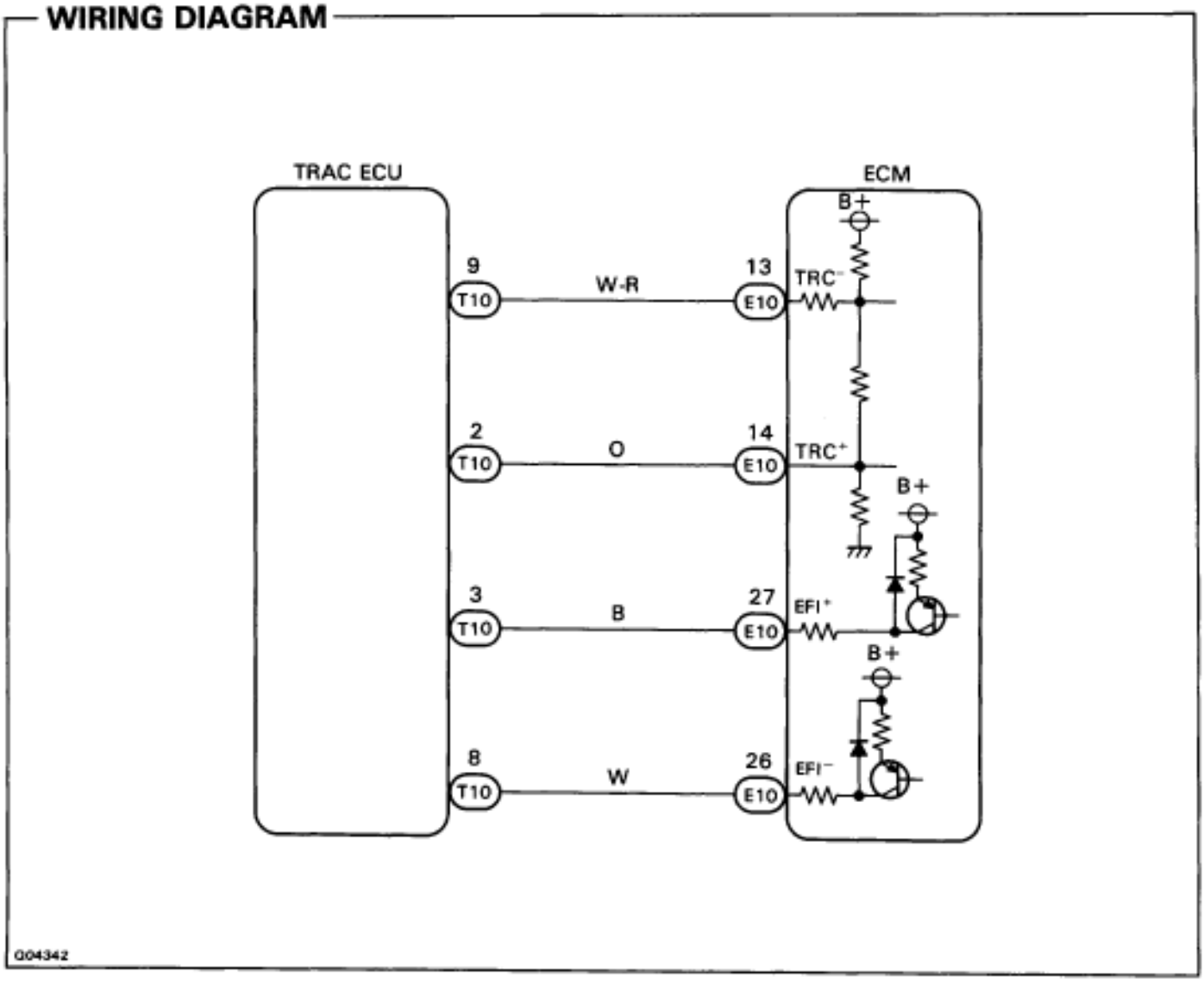

INSPECTION PROCEDURE

1 Check harness and connector between ECM and TRAC ECU (See page IN–30).

- OK
- NG → Repair or replace harness or connector.

2 Check diagnostic trouble code of TRAC ECU (See page BR–128).

- OK
- NG → Substitute another TRAC ECU.

If the same code is still output after the diagnostic trouble code is deleted, check the contact condition of each connection.
If the connections are normal, the TRAC ECU may be defective.

Throttle Position Sensor Circuit

CIRCUIT DESCRIPTION

The throttle position sensor detects the throttle valve opening angle and sends signals to ECM.

WIRING DIAGRAM

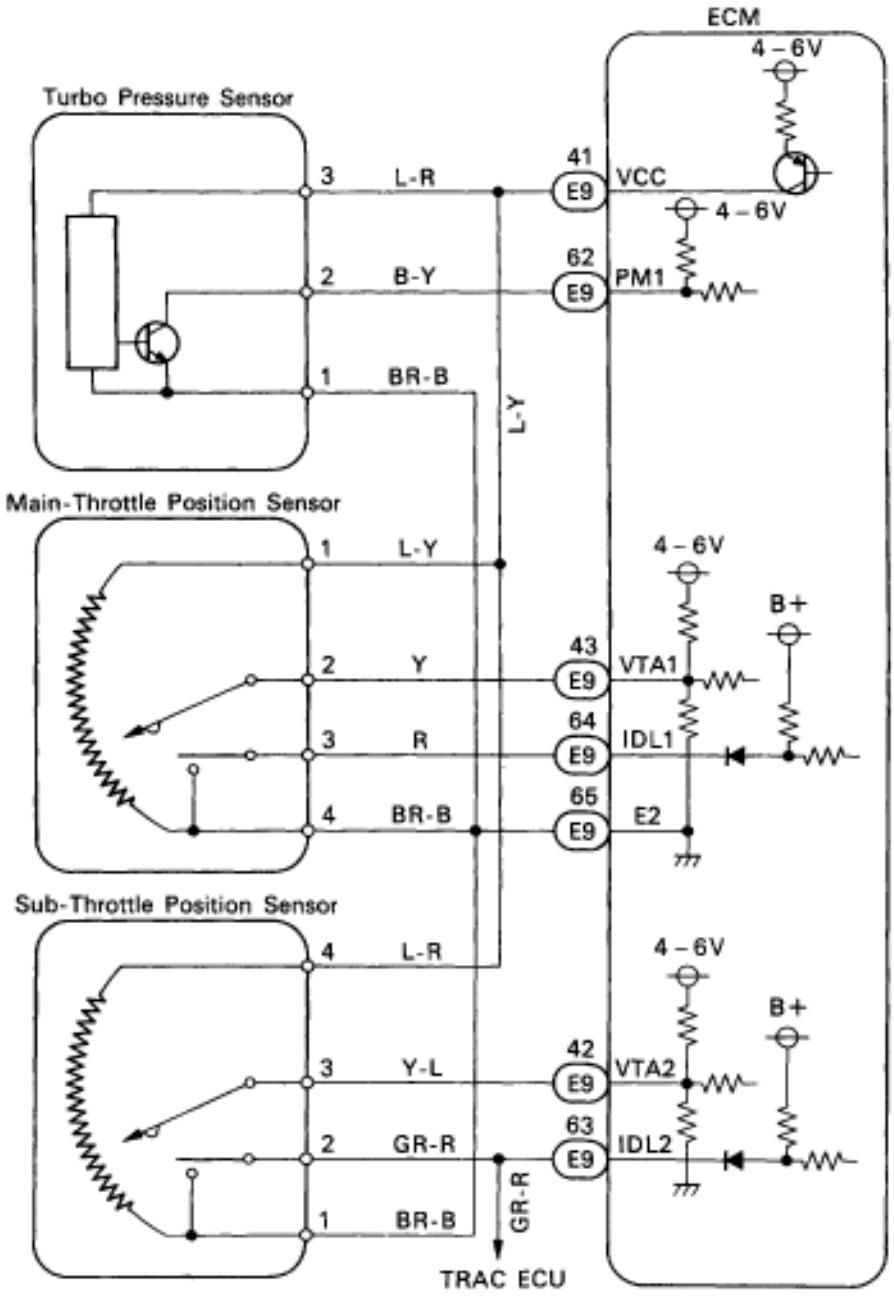

INSPECTION PROCEDURE

1 Check main throttle position signal.

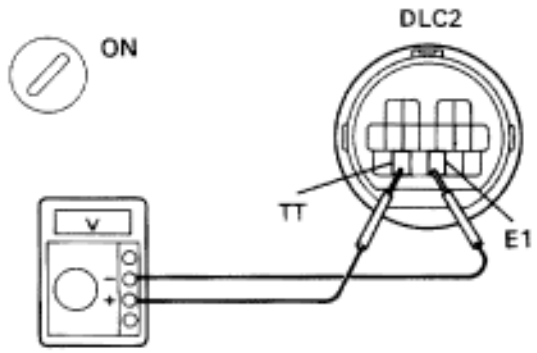

P Turn ignition switch ON.

C Check voltage at the terminal TT of the DLC2 while gradually depressing the accelerator pedal from the fully closed position to the fully opened position.

OK **Voltage changes from 0 V to 8 V by stages.**

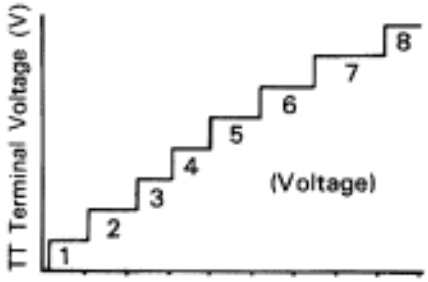

Hint Do not depress the brake pedal during the test. The voltage will stay at 0 V if depressed.

NG

OK → **Proceed to next circuit inspection shown on matrix chart (See page AT2–64).**

2 Check main (sub)–throttle position sensor. (see page EG–292, 293)

OK

NG → **Replace throttle position sensor.**

3 Check harness and connector between ECM and Main (Sub)–throttle position sensor (See page IN–30).

OK

NG → **Repair or replace harness or connector.**

Check and replace ECM.

Kick–down Switch Circuit

CIRCUIT DESCRIPTION

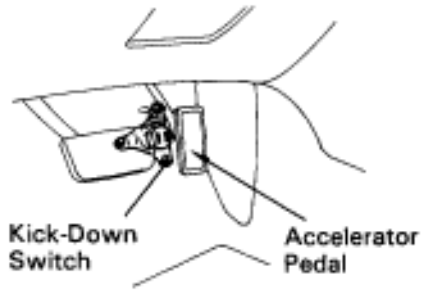

Q04246

The kick–down switch is turned on when the accelerator pedal is depressed beyond the full throttle opening and sends signals to ECM.
When the kick–down switch is turned on, the ECM controls gear shifting according to the programmed shift diagrams.
If a short circuit develops in the kick–down switch, the ECM disregards the kick–down signals and controls shifting at the normal shift points.

WIRING DIAGRAM

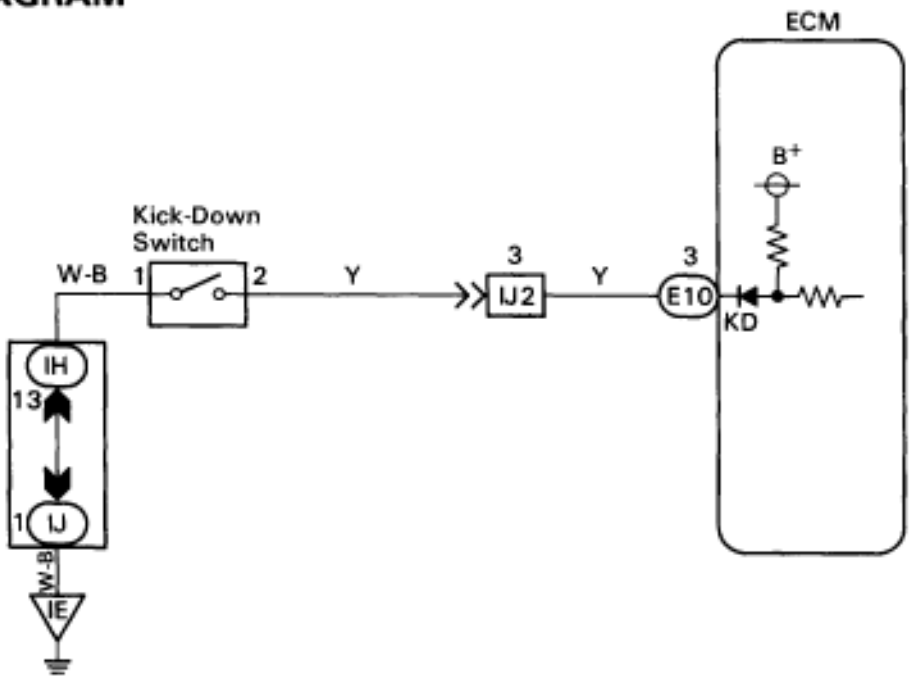

Q04321

INSPECTION PROCEDURE

1 **Check voltage between terminal KD of ECM connector and body ground.**

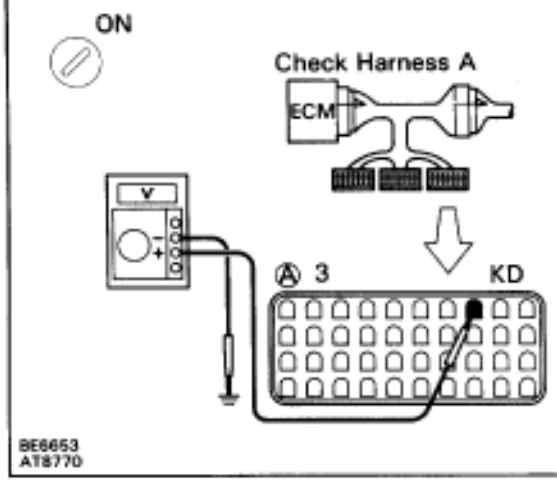

P
1. Connect the Check Harness A to the ECM (See page EG–510).
2. Turn ignition switch ON.

C Measure voltage between terminal KD of ECM connector and body ground when accel. pedal is fully depressed or not.

OK

Accel. pedal	Voltage
Fully depressed (Kick–down SW is ON)	Below 0.5 V
Released (Kick–down SW is OFF)	10 — 14 V

NG

OK **Proceed to next circuit inspection shown on matrix chart (See page AT2–64).**

2 **Check kick–down switch.**

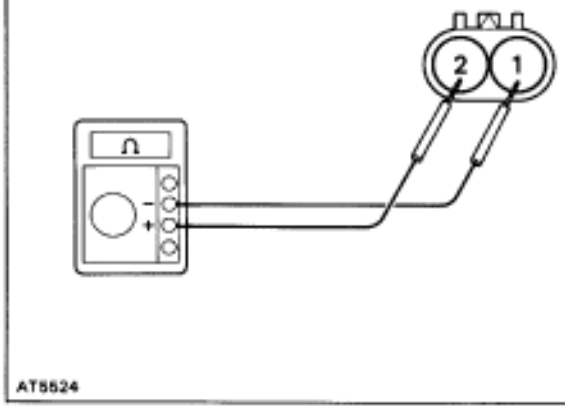

C
1. Disconnect kick–down switch connector.
2. Measure resistance between terminals 1 and 2 of kick–down switch connector when kick–down switch is on and off.

OK

Kick–down switch	Resistance
ON	0 Ω (continuity)
OFF	∞ Ω (open)

OK

NG **Replace kick–down switch.**

3 **Check harness and connector between ECM and kick–down switch, kick–down switch and body ground (See page IN–30).**

OK

NG **Repair or replace harness or connector.**

Check and replace ECM.

Park Neutral Position Switch Circuit

CIRCUIT DESCRIPTION

The park/neutral position switch detects the shift lever position and sends signal to ECM.
The ECM receives signals (R, NSW, 2 and L) from the park/neutral position switch. When the signal is not sent to the ECM from the park/neutral position switch, the ECM judges that the shift lever is in the D position.

WIRING DIAGRAM

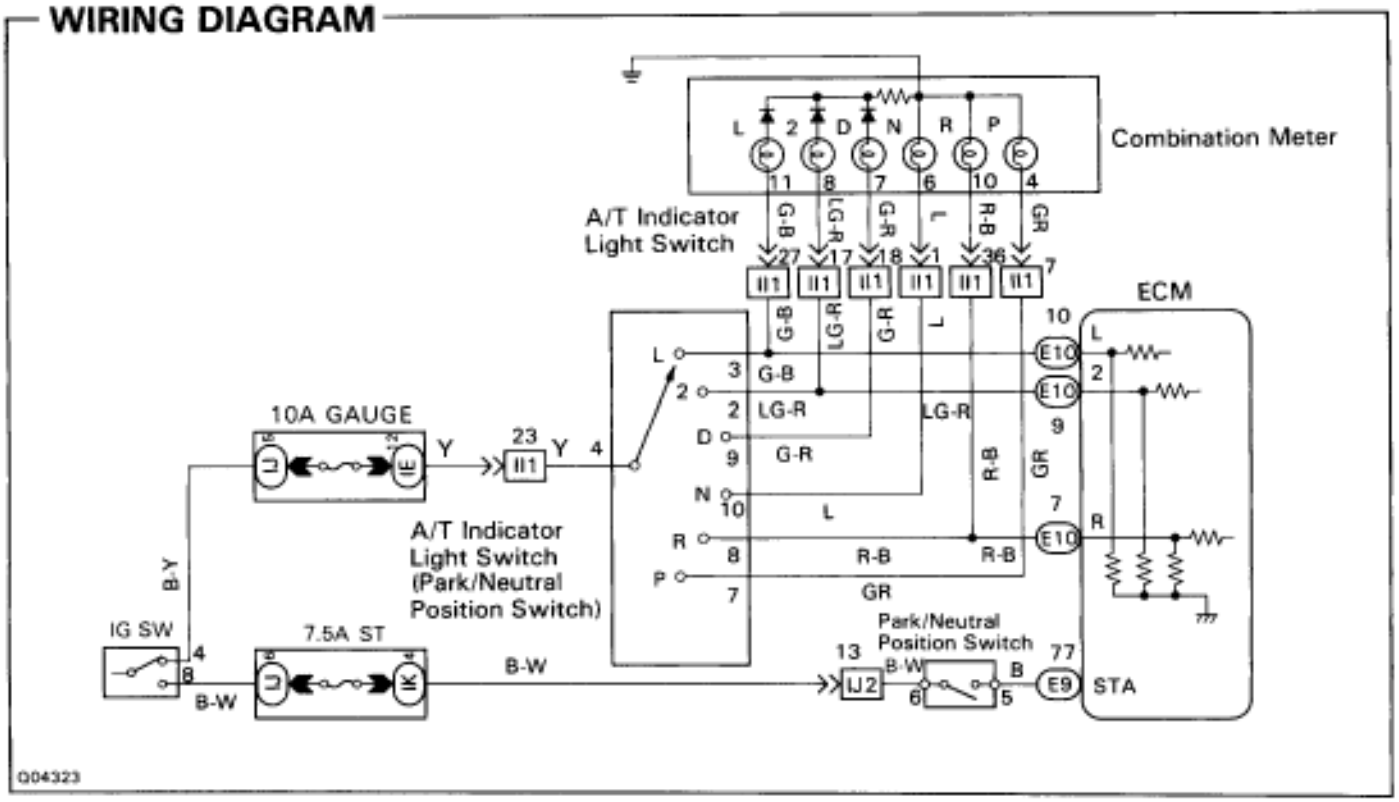

INSPECTION PROCEDURE

1 Check voltage between terminals R, NSW, 2, L of ECM connector and body ground.

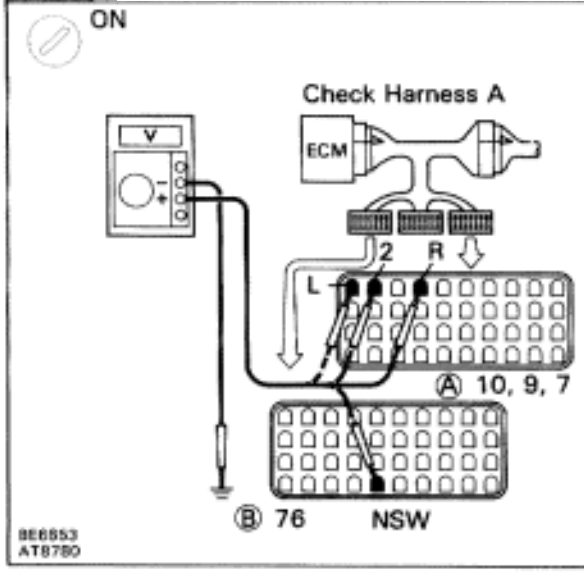

P
1. Connect the Check Harness A to the ECM (See page EG–510).
2. Turn ignition switch ON.

C
Measure voltage between terminals R, NSW, 2, L of the Check Harness A connector and body ground when the shift lever is positioned to the following ranges.

OK

Position	R-body ground	NSW-body ground	2-body ground	L-body ground
P, N	Below 0.5 V	Below 0.5 V	Below 0.5 V	Below 0.5 V
R	10 – 14 V*	10 – 14 V*	Below 0.5 V	Below 0.5 V
D	Below 0.5 V	10 – 14 V	Below 0.5 V	Below 0.5 V
2	Below 0.5 V	10 – 14 V	10 – 14 V	Below 0.5 V
L	Below 0.5 V	10 – 14 V	Below 0.5 V	10 – 14 V

*: The voltage will drop slightly due to lighting up of the back up light.

NG

OK → **Proceed to next circuit inspection shown on matrix chart (See page AT2–64).**

2 Check park/neutral position switch.

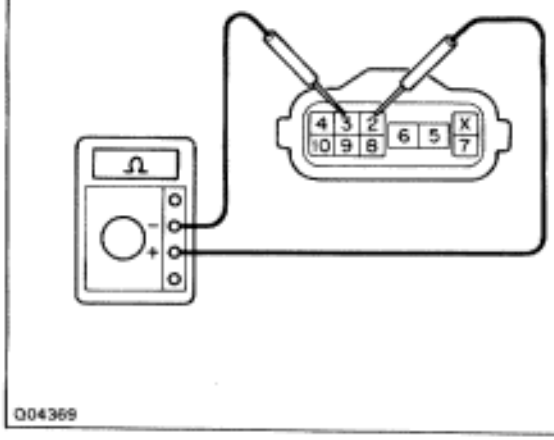

P
1. Jack up the vehicle.
2. Remove the park/neutral position switch (See page AT2–17).

C
Check continuity between each terminal shown below when the shift lever is positioned to each position.

○—○ Continuity

Position \ Terminal	6	5	4	7	8	10	9	2	3
P	○	○	○	○					
R			○	○					
N	○	○	○			○			
D			○				○		
2			○					○	
L			○						○

OK

NG → **Replace the park/neutral position switch.**

3 Check harness and connector between battery and park/neutral position switch, park/neutral position switch and ECM (See page IN–30).

OK

NG → **Repair or replace harness and connector.**

Check and replace ECM.

Stop Light Switch Circuit

CIRCUIT DESCRIPTION

The purpose of this circuit is to prevent the engine from stalling, while driving in lock–up condition, when brakes are suddenly applied.
When the brake pedal is operated, this switch sends a signal to the ECM. Then the ECM cancels operation of the lock–up clutch while braking is in progress.

WIRING DIAGRAM

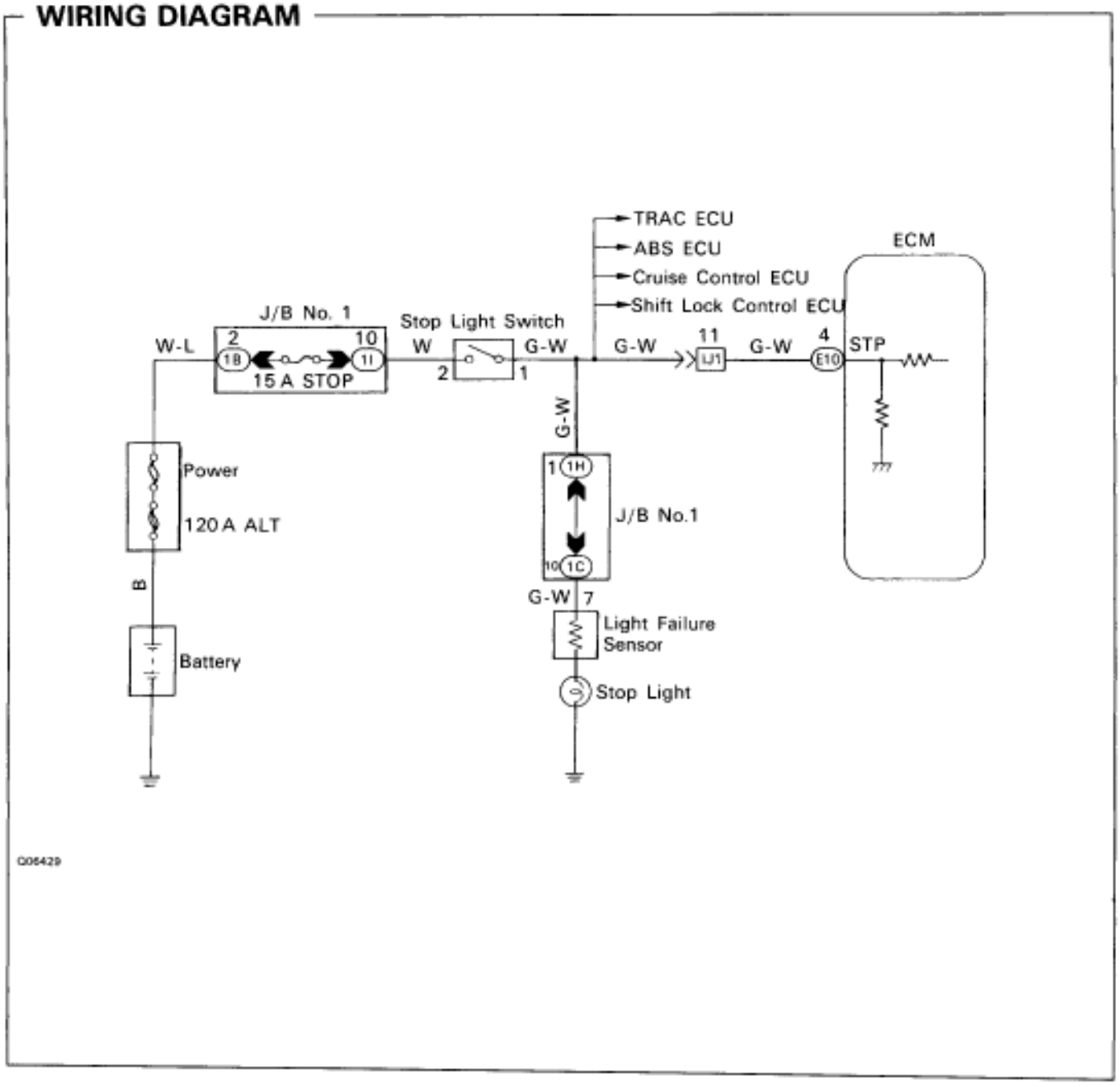

INSPECTION PROCEDURE

1 Check operation of stop light.

C Check if the stop lights go on and off normally when the brake pedal is depressed and released.

OK → **2**

NG → **Check and repair stop light circuit.**

2 Check stop light signal.

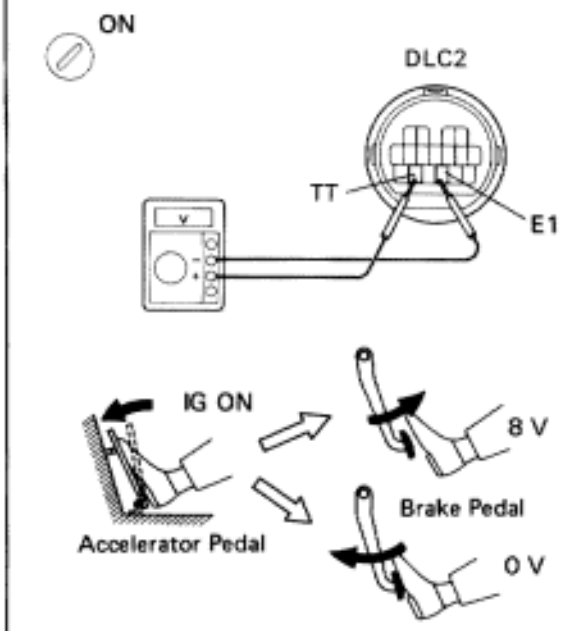

C
1. Connect the voltmeter to the terminals TT and E1 of the DLC2.
2. Turn ignition switch ON.
3. Fully depress the accelerator pedal until the voltmeter indicates 8 V and hold it.
4. Depress and release the brake pedal and check the voltage.

OK

Brake pedal	Voltage
Depressed	0 V
Released	8 V

NG → **3**

OK → **Proceed to next circuit inspection shown on matrix chart (See page AT2–64).**

3 Check harness and connector between ECM and stop light switch (See page IN–30).

OK → **Check and replace ECM.**

NG → **Repair or replace harness or connector.**

Pattern Select Switch Circuit

CIRCUIT DESCRIPTION

The ECM memory contains the shift programs for the NORMAL and MANUAL patterns, 2 position, L position and the lock–up patterns. Following the programs corresponding to the signals from the pattern select switch, the park/neutral position switch and other various sensors the ECM switches the solenoid valves ON and OFF, thereby controlling the transmission gear change and the lock–up clutch operation.

WIRING DIAGRAM

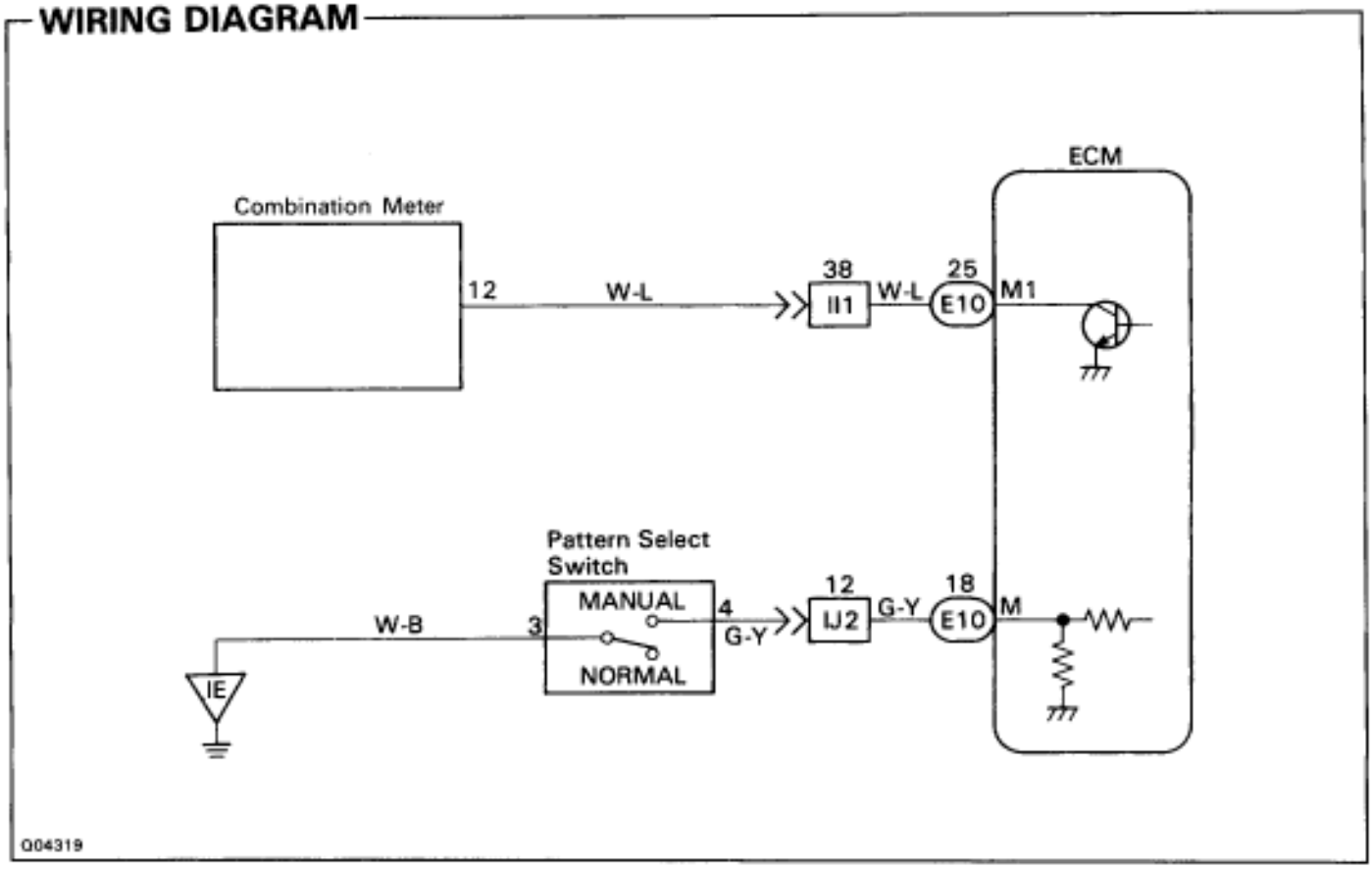

INSPECTION PROCEDURE

1 **Check A/T fluid temp. sensor (See page AT2–70).**

OK → NG: **Replaces A/T fluid temp. sensor.**

2 **Check if A/T fluid temp. is too hot.**

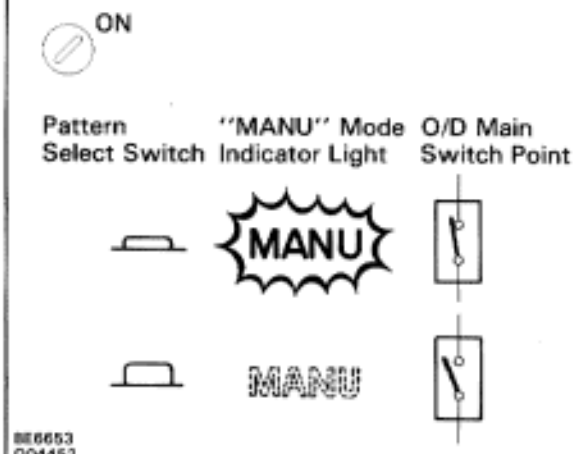

P
1. Turn ignition switch ON.
2. Check "MANU" mode indicator light when pattern select switch is pushed in to ON.

OK: "MANU" mode indicator light comes on and stays on.

Hint: If the A/T fluid temp. becomes too hot, the "MANU" mode indicator light flashes for several seconds and goes off. The driving mode then automatically changes from Manual mode to the Normal mode.

OK → NG: **Wait until the A/T fluid temp. is reduced.**

3 **Check voltage between terminal M of ECM connector and body ground.**

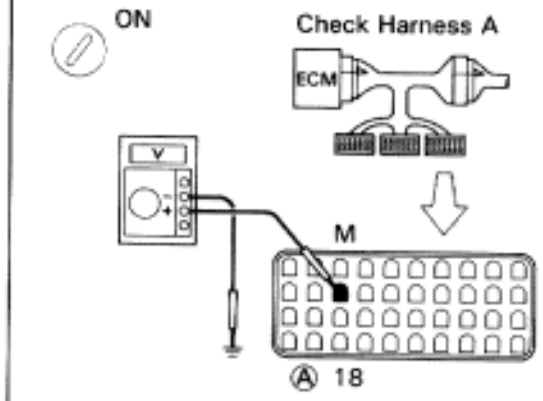

P
1. Connect the Check Harness A to the ECM (See page EG–510).
2. Turn ignition switch ON.

C: Measure voltage between the terminal M of the ECM connector and body ground when the pattern select switch is set to the MANU (MANUAL) position and NORM (NORMAL) position.

OK

Pattern select switch	Voltage
MANU	10 — 14 V
NORM	Below 1 V

Hint: The ECM uses the Normal pattern signal if the Manual signal is not input.

NG → OK: **Proceed to next circuit inspection shown on matrix chart (See page AT2–64).**

Go to step. 4.

4 **Check pattern select switch.**

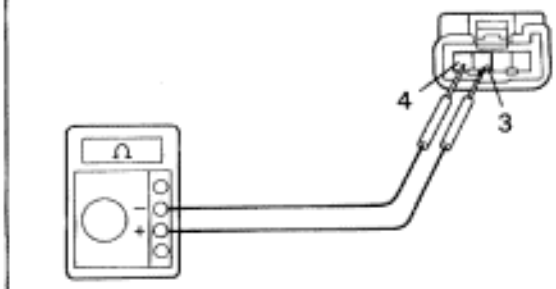

P Disconnect the pattern select switch connector.

C Measure resistance between the terminals 3 and 4 of the pattern select switch connector when the select switch is set to MANU and NORM positions.

OK

Pattern	Resistance
MANU	0 Ω (continuity)
NORM	∞ Ω (open)

OK

NG → **Replace pattern select switch.**

5 **Check harness and connector between battery and pattern select switch, pattern select switch and ECM (See page IN–30).**

OK

NG → **Repair or replace harness or connector.**

Check and replace ECM.

O D Main Switch & O D OFF Indicator Light Circuit

CIRCUIT DESCRIPTION

The O/D main switch contacts go off when the switch is pushed in and comes on when it is pushed out. In O/D main switch OFF position the O/D OFF indicator lights up, and the ECM prohibits shifting to overdrive. The ECM also causes the O/D OFF indicator light to blink when a malfunction is detected. In this case, connecting the terminals in the DLC2 or DLC1 can display the malfunction code.

WIRING DIAGRAM

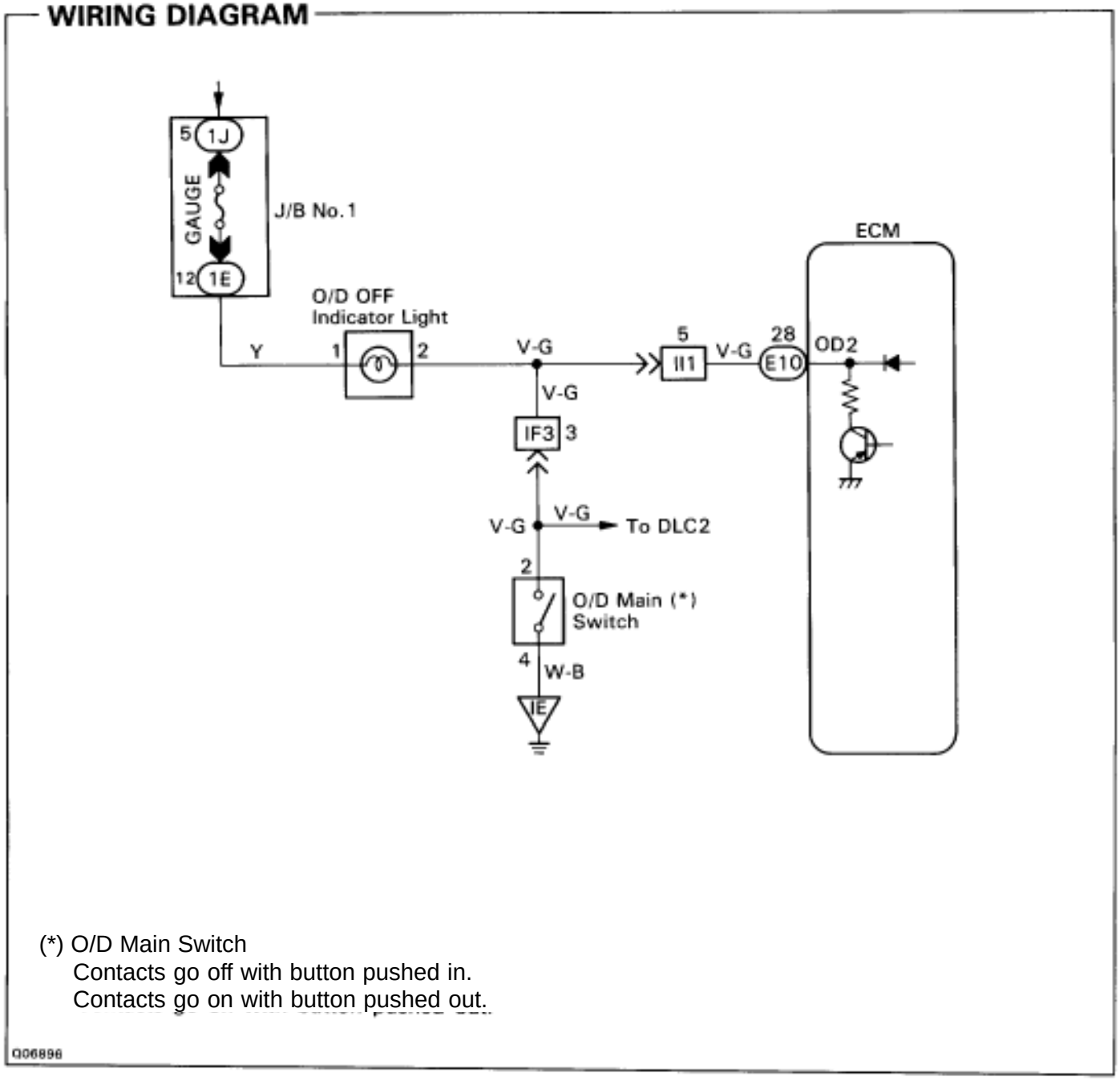

(*) O/D Main Switch
Contacts go off with button pushed in.
Contacts go on with button pushed out.

Q06896

INSPECTION PROCEDURE

O/D OFF indicator light does not light up.

1 Check operation of O/D main switch.

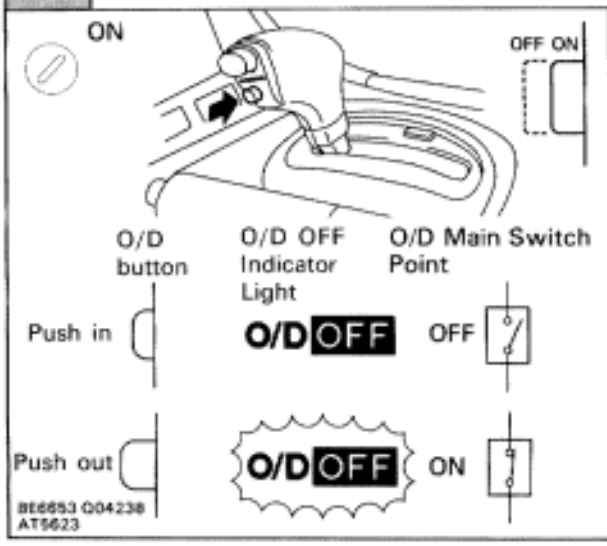

C
1. Turn ignition switch ON.
2. Check “O/D OFF” indicator light when O/D button is pushed in to ON.

OK **“O/D OFF” indicator light goes off.**

C
3. Check “O/D OFF” indicator light when O/D button is pushed again, to OFF.

OK **“O/D OFF” indicator light lights up.**

Hint If the “O/D OFF” indicator light blinks when the O/D button is pushed in to ON, a malfunction is occurring in the system.
Check the diagnostic trouble code.

OK

NG **Go to step 4.**

2 Check voltage between terminal OD2 of ECM connector and body ground.

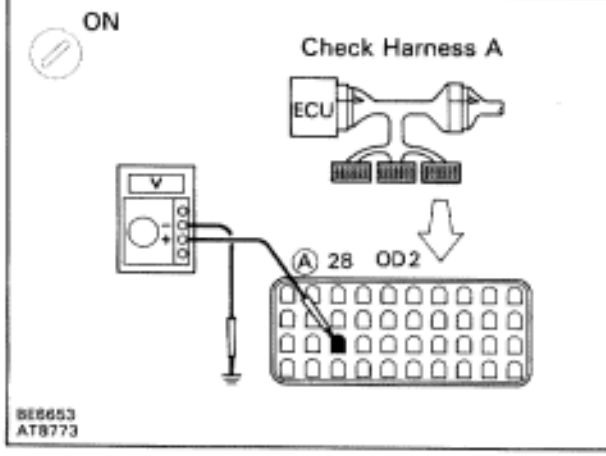

P
1. Connect the Check Harness A to the ECM (See page EG–510).
2. Turn ignition switch ON.

C Check voltage between terminal OD2 of ECM and body ground.

OK

O/D Main Switch	Voltage
OFF	Below 0.5 V
ON	10 ~ 14 V

NG

OK **Proceed to next circuit inspection shown on matrix chart (See page AT2–64).**

3 Check harness and connector between O/D off indicator light and ECM (See page IN–30).

OK

NG **Repair or replaces harness or connector.**

Check and replace ECM.

4 Check O/D main switch.

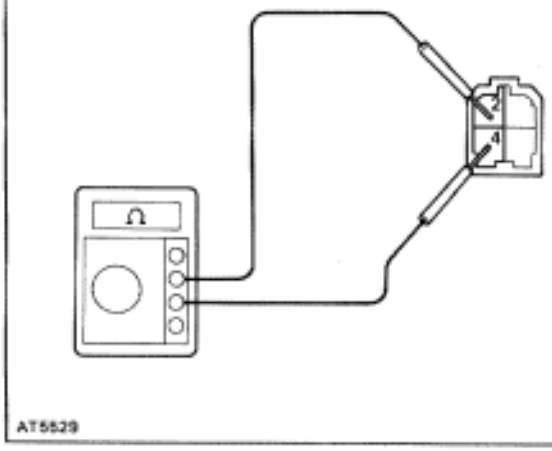

C
1. Disconnect O/D main switch connector.
2. Measure resistance between terminals 2 and 4 of O/D main switch connector.

OK

O/D Main Switch	Resistance
ON	∞ Ω (open)
OFF	0 Ω (continuity)

OK

NG → **Replace O/D main switch.**

Check and replace combination meter. (See combination meter troubleshooting section on page BE–41).

O/D OFF indicator light remains ON

1 Check O/D main switch.

OK

NG → **Replace O/D main switch.**

2 Check harness and connector between O/D off indicator light and ECM (See page IN–30).

OK

NG → **Repair or replace harness or connector.**

Check and replace ECM.

O/D OFF indicator light blinks

Do diagnostic trouble code check (See page AT2–34).

O D Cancel Signal Circuit

— CIRCUIT DESCRIPTION

While driving with cruise control activated, in order to minimize gear shifting and provide smooth up–hill cruising, overdrive may be prohibited temporarily in some conditions.
The Cruise Control ECU sends O/D cut signals to the ECM as necessary and the ECM cancels overdrive shifting until these signals are discontinued.
(For details see the cruise control section, page BE–162)

WIRING DIAGRAM

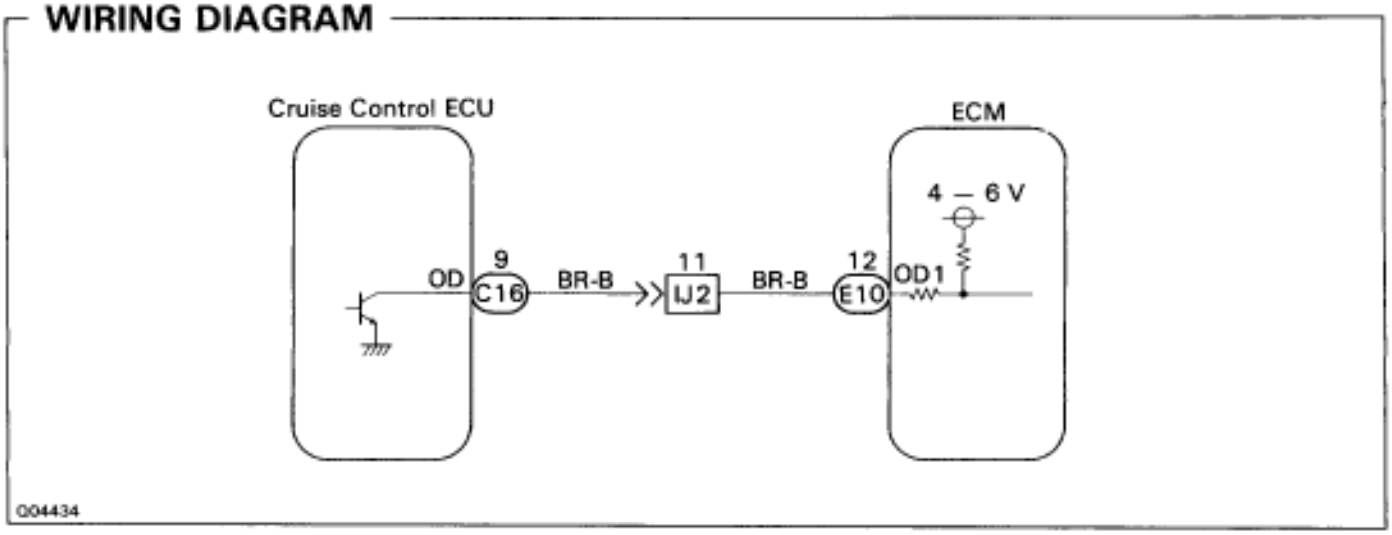

INSPECTION PROCEDURE

1 **Check voltage between terminal OD1 of ECM connector and body ground.**

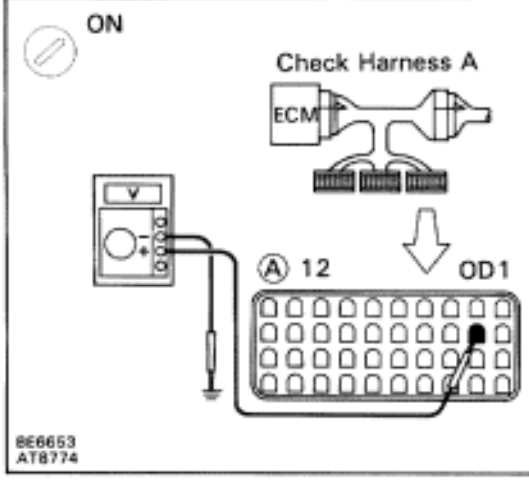

P
1. Connect the Check Harness A to the ECM
2. Turn ignition switch ON.

C Measure voltage between terminal OD1 of ECM connector and body ground.

OK **Voltage: 4 — 6 V**

NG

Go to **2** .

OK Proceed to next circuit inspection shown on matrix chart (See page AT2–64).

2 **Check voltage between terminal OD of Cruise Control ECU harness side connector and body ground.**

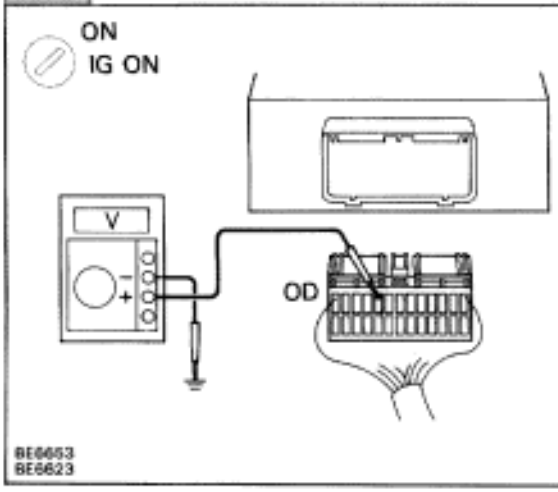

P
1. Disconnect Cruise Control ECU connector.
2. Turn ignition switch ON.

C
Measure voltage between terminal OD of Cruise Control ECU harness side connector and body ground.

OK
Voltage: 4 — 6 V

NG

OK → **Check and replace Cruise Control ECU.**

3 **Check harness and connector between Cruise Control ECU and ECM (See page IN–30).**

OK

NG → **Repair or replace harness or connector.**

Check and replace ECM.

TE1 Terminal Circuit

CIRCUIT DESCRIPTION

ECM displays diagnostic trouble codes using the O/D OFF indicator light when terminals TE1 and E1 of the DLC2 or DLC1 are connected.

WIRING DIAGRAM

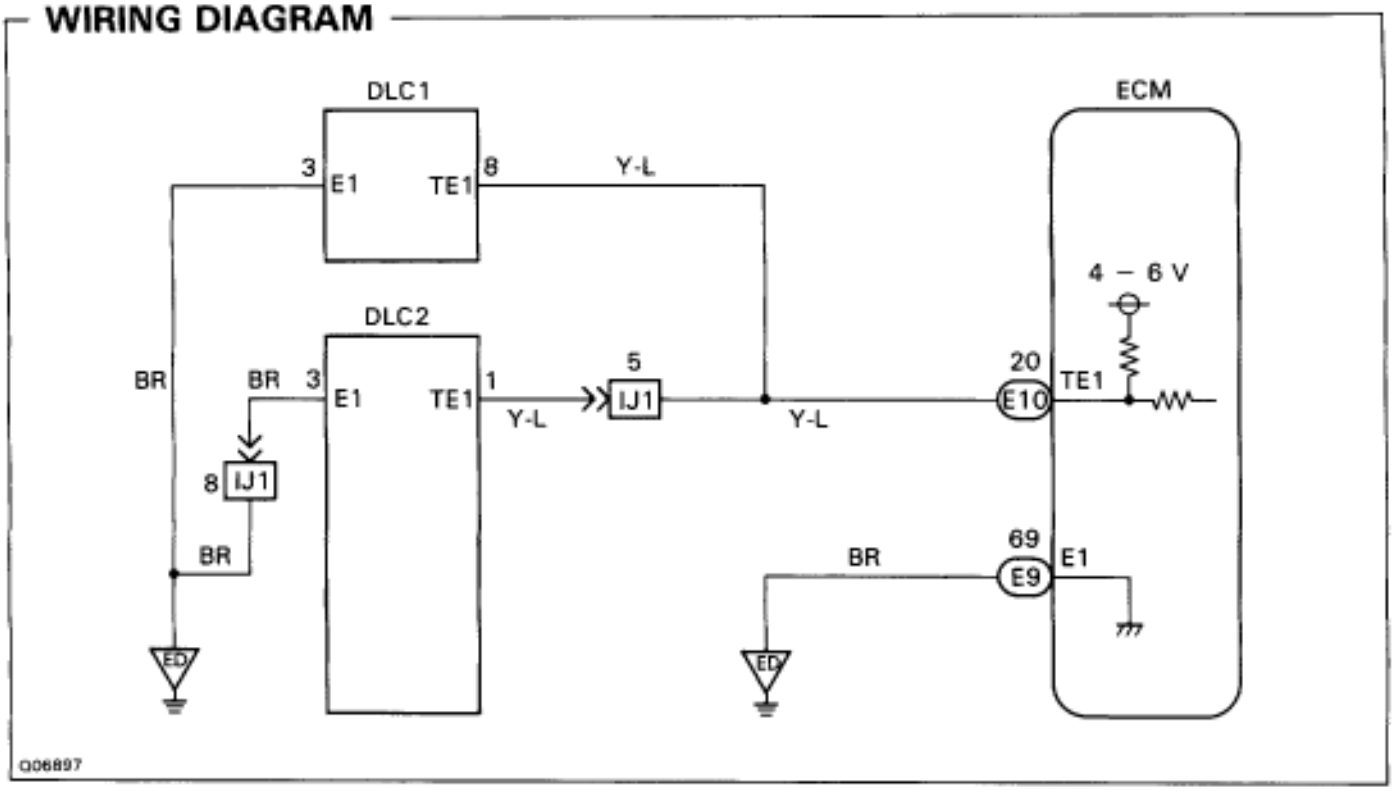

INSPECTION PROCEDURE

1 **Check voltage between terminal TE1 and E1 of DLC2 or DLC1.**

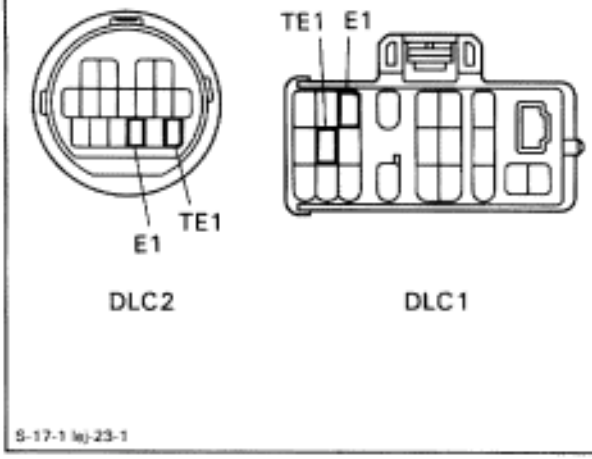

C Measure voltage between terminals TE1 and E1 of DLC2 or DLC1.

OK **Voltage: 4 — 6 V**

NG

OK → **Proceed to next circuit inspection shown on matrix chart (See page AT2–64).**

2 **Check harness and connector between ECM and DLC2, DLC1 and body ground (See page IN–30).**

OK

NG → **Repair or replace harness or connector.**

Check and replace ECM.

TT Terminal Circuit

CIRCUIT DESCRIPTION

Checks of ECM input and output signals related to the throttle position sensor, brakes, shift position and other circuits can be performed by measuring the voltages at terminal TT of the DLC2

WIRING DIAGRAM

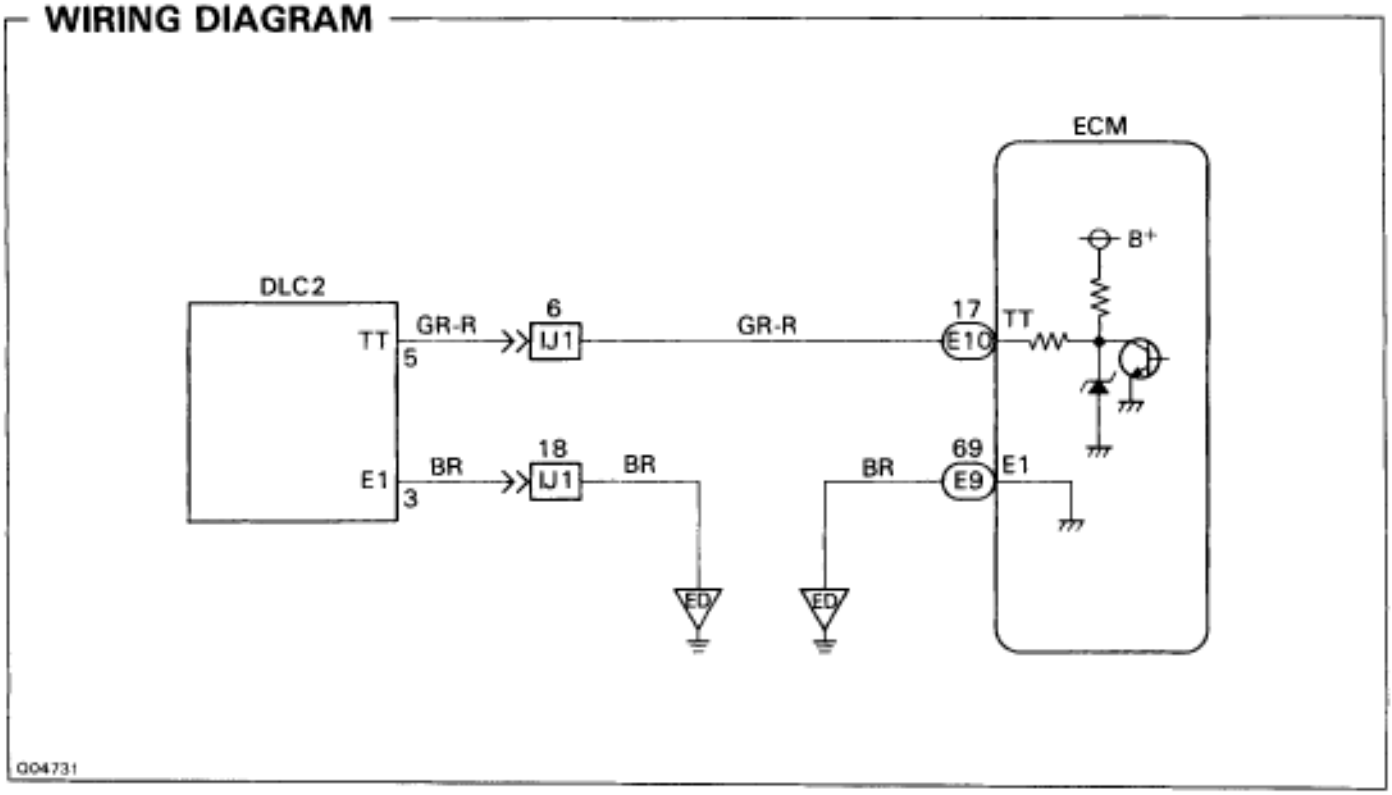

INSPECTION PROCEDURE

1 **Check harness and connector between ECM and DLC2, DLC1 and body ground (See page IN–30).**

OK

NG **Repair or replace harness or connector.**

Check and replace ECM.

SERVICE SPECIFICATIONS

SERVICE DATA

Line pressure (wheel locked)	Engine idling			
	D position	471–530 kPa	4.8–5.4 kgf/cm^2	68–77 psi
	R position	686–785 kPa	7.0–8.0 kgf/cm^2	100–114 psi
	AT stall			
	D position	1,334–1,470 kPa	13.6–15.0 kgf/cm^2	193–213 psi
	R position	1,697–2,030 kPa	17.3–20.7 kgf/cm^2	246–294 psi
Engine stall revolution	D and R position	2,600 ± 150 rpm		
Time lag	N → D position	Less than 1.2 seconds		
	N → R positionposition	Less than 1.5 seconds		
Engine idle speed (In N position and air conditioner OFF)		650 ± 50 rpm		
Drive plate runout	Max.	0.20 mm		0.0079 in.
Torque converter clutch runout	Max.	0.1 mm		0.004 in.

SHIFT POINT

NORM Mode

Shift position	Shifting point		Vehicle speed km/h (mph)
D	Throttle valve fully opened	1→2	62–72 (39–45)
		2→3	120–129 (75–80)
		3→O/D	187–201 (116–125)
		O/D→3	181–195 (112–121)
		3→2	109–117 (68–73)
		2→1	41–47 (25–29)
	Throttle valve fully closed	3→O/D	29–34 (18–25)
		O/D→3	23–28 (14–17)
2	Throttle valve fully opened	1→2	62–72 (39–45)
		*3→2	135–147 (84–91)
		2→1	41–47 (25–29)
L	Throttle valve fully opened	*2→1	60–66 (37–41)

MANU Mode

Shift position	Shifting point		Vehicle speed km/h (mph)
D	Throttle valve fully opened	2→3	122–131 (76–81)
		3→O/D	194–207 (121–129)
		O/D→3	187–201 (116–125)
		3→2	109–117 (68–73)
	Throttle valve fully closed	3→O/D	181–195 (112–121)
		O/D→3	23–28 (14–17)
2	Throttle valve fully opened	*3→2	135–147 (84–91)
L	Throttle valve fully opened	*2→1	60–66 (37–41)

* Shift points is the same when the throttle valve is closed as when the throttle valve is opened.

LOCK–UP POINT

NORM Mode

D position Throttle valve opening 5%	Lock–up ON km/h (mph)	Lock–up OFF km/h (mph)
3rd Gear	60–66 (37–41)	50–56 (31–35)
O/D Gear	53–59 (33–37)	50–56 (31–35)

MANU Mode

D position Throttle valve opening 5%	Lock–up ON km/h (mph)	Lock–up OFF km/h (mph)
2nd Gear (2 position)	60–66 (37–41)	57–63 (35–39)
3rd Gear (D position)	60–66 (37–41)	57–63 (35–39)
O/D Gear (D position)	181–195 (112–121)	69–76 (43–47)

HINT:

(1) There is no lock–up in the L positions.
(2) In the following cases, the lock–up will be released regardless of the lock–up pattern.
- When the throttle valve is completely closed.
- When the brake light switch is ON.

(3) Shift up to 3rd will not occur when the engine coolant temp. is below 35˚C (95˚F) and the vehicle speed is below 40 km/h (25 mph).
(4) Shift–up to O/D will not occur when the engine coolant temp. is below 60˚C (140˚F) and the vehicle speed is below 60 km/h (37 mph).
(5) When the vehicle speed drops to 10 km/h (6 mph) or more below the cruise control set vehicle speed, shift down from O/D to 3rd occurs.

TORQUE SPECIFICATIONS

Part tightened	N·m	kgf·cm	ft·lbf
No.1 vehicle speed sensor	16	160	12
No.2 vehicle speed sensor	5.4	55	48 in.·lbf
O/D direct clutch speed sensor	5.4	55	48 in.·lbf
A/T fluid temp. sensor	15	150	11
Valve body	10	100	7
Oil strainer	10	100	7
Oil pan	7.4	75	65 in.·lbf
Starter	37	380	27
Rear support X Body	25	260	19
Torque converter X Drive plate	34	340	25
Oil cooler union nut	34	350	25
Oil cooler pipe bracket	10	100	7
Propeller shaft X Transmission	56	570	41
Propeller shaft X Differential	79	805	58
Propeller shaft center support	49	500	36
Propeller shaft adjusting nut	53	540	39
Oil pan drain plug	17	175	13
Drive plate X Torque converter	33	340	25
Drive plate X Crankshaft	64	650	47
Transmission X Engine block 14 mm bolt 17 mm bolt	37 72	380 730	27 53
Park/neutral position switch X Transmission case	16	160	12
Transmission output flange	123	1,250	90
Shift control rod X Shift lever	13	130	9
Shift control rod X Park/neutral position switch	16	160	12
Exhaust pipe bracket X Transmission housing	37	380	27
No.2 exhaust pipe X Center exhaust pipe	58	590	43
Rear center floor crossmember brace X Body	13	130	9
Heat insulator X Body	5.4	55	48 in.·lbf

V160 MANUAL TRANSMISSION

PREPARATION
SST (SPECIAL SERVICE TOOLS)

	09308–10010 Oil Seal Puller	
	09308–14010 Replacer Pipe A	
	09309–14040 Remover & Replacer D	
	09330–00021 Companion Flange Holding Tool	
	09950–30010 Puller A Set	
	(09951–03010) Upper Plate	
	(09953–03010) Center Bolt	
	(09954–03010) Arm	
	(09955–03030) Lower Plate 130	
	(09956–03030) Adaptor 20	

EQUIPMENT

Calipers	
Torque wrench	

LUBRICANT

Item	Capacity	Oil type
Manual transmission oil	1.8 liters (1.9 US qts, 1.6 lmp.qts)	TOYOTA GEAR OIL V160 or ESSO ATF DEXRON®D 21065

SSM (SPECIAL SERVICE MATERIALS)

08833–00080	Adhesive 1344, THREE BOND 1344, LOCTITE 242 or equivalent	Companion flange lock nut Vehicle speed sensor set bolt

TROUBLESHOOTING

Use the table below to help you find the cause of the problem. The numbers indicate the priority of the likely cause of the problem. Check each part in order. If necessary, replace these parts.

See page / Parts Name / Trouble	Oil (Level low)	Oil (Wrong)	Oil (Level too high)	Gasket (Damaged)	Oil seal (Worn or damaged)	O–Ring (Worn or damaged)	Control cable (Family)	Locking ball spring (Damaged)	Shift fork (Worn)	Gear (Worn or damaged)	Bearing (Worn or damaged)	Synchronizer ring (Worn or damaged)	Shift key spring (Damaged)	Flywheel damper
	–	–	–	–	MT2–8	MT2–4 MT2–8	–	–	–	–	–	–	–	CL Section
Noise	2	3								4	4			1
Oil leakage			1	2	2	3								
Hard to shift or will not shift							1					2	3	
Jumps out of gear								1	2	3	3			

SSM (SPECIAL SERVICE MATERIALS)

08833–00080	Adhesive 1344, THREE BOND 1344, LOCTITE 242 or equivalent	Companion flange lock nut Vehicle speed sensor set bolt

TROUBLESHOOTING

Use the table below to help you find the cause of the problem. The numbers indicate the priority of the likely cause of the problem. Check each part in order. If necessary, replace these parts.

See page / Parts Name / Trouble	Oil (Level low)	Oil (Wrong)	Oil (Level too high)	Gasket (Damaged)	Oil seal (Worn or damaged) MT2–8	O–Ring (Worn or damaged) MT2–4 MT2–8	Control cable (Family)	Locking ball spring (Damaged)	Shift fork (Worn)	Gear (Worn or damaged)	Bearing (Worn or damaged)	Synchronizer ring (Worn or damaged)	Shift key spring (Damaged)	Flywheel damper CL Section		
Noise	2	3								4	4			1		
Oil leakage			1	2	2	3										
Hard to shift or will not shift							1					2	3			
Jumps out of gear								1	2	3	3					

ASSEMBLY REMOVAL AND INSTALLATION

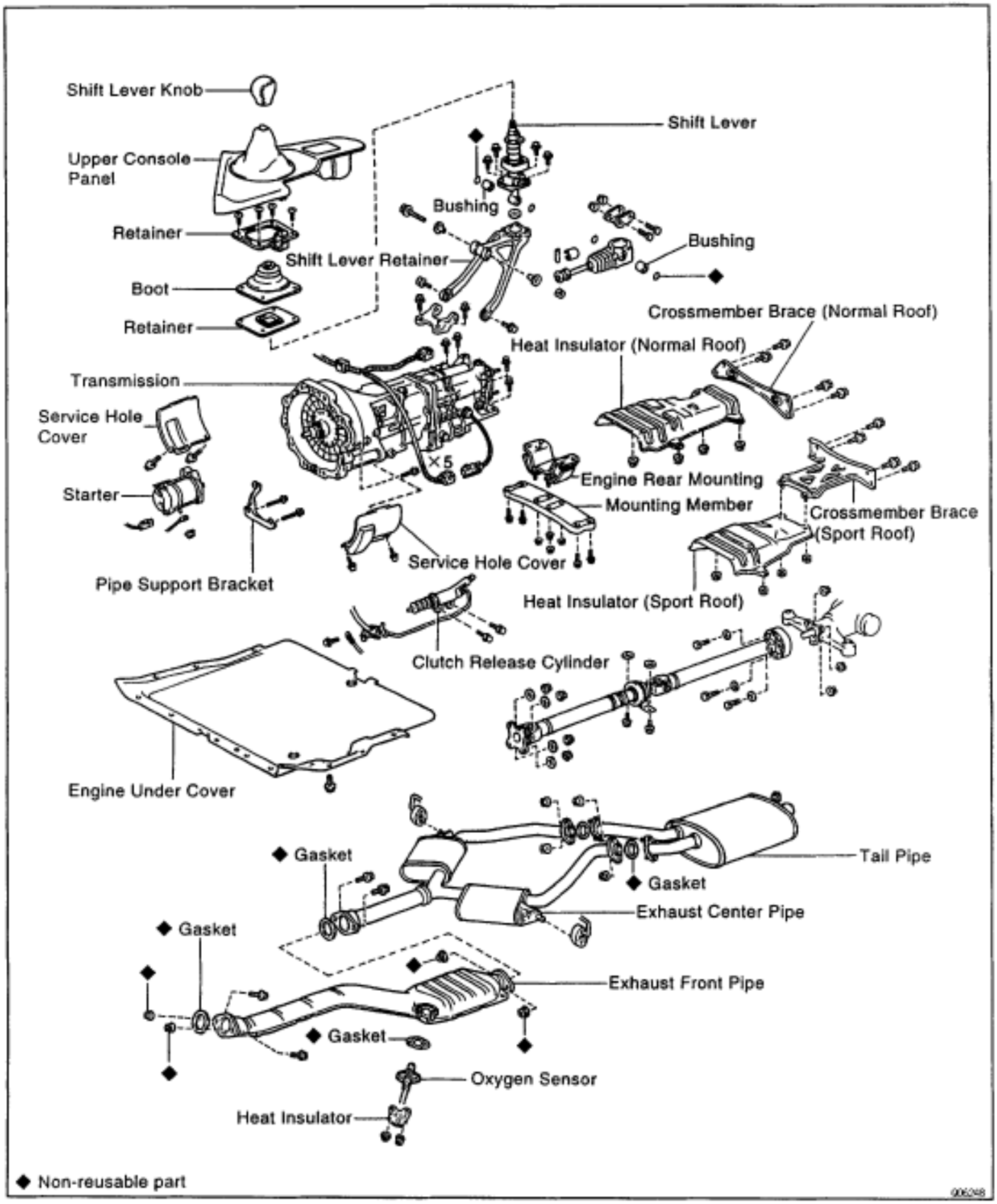

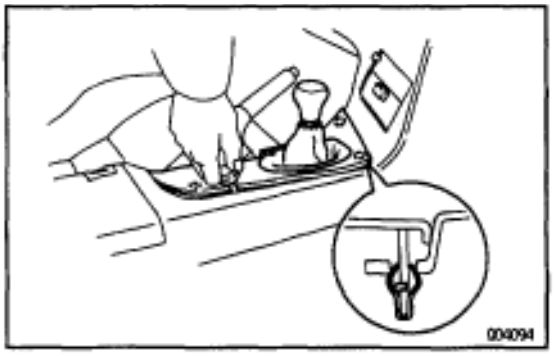

TRANSMISSION REMOVAL

Installation is in the reverse order of removal.

INSTALLATION HINT: After installation, check and inspect item as follow.

- Road test the vehicle.

1. REMOVE UPPER CONSOLE PANEL, SHIFT LEVER BOOT AND SET BOLTS

(a) Remove the shift lever knob.

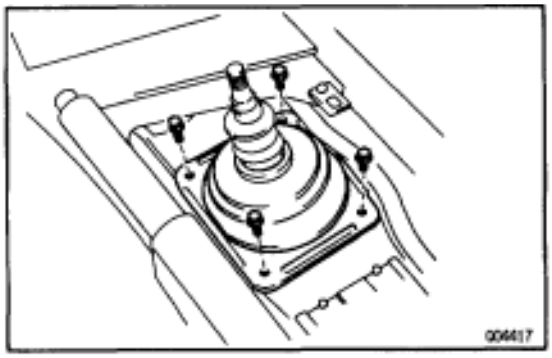

(b) Using a screwdriver, pry out the upper console panel.
(c) Remove the 4 set bolts.
(d) Remove the shift and select lever boot No.1 and No.2.

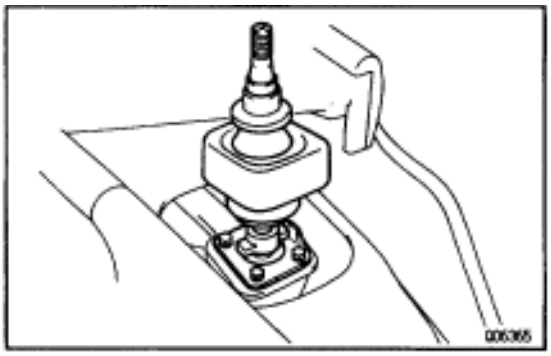

(e) Remove the 4 set bolts.
Torque: 7.8 N·m (80 kgf·cm, 69 in.·lbf)

2. RAISE VEHICLE

NOTICE: Be sure the vehicle is securely supported.

3. DRAIN TRANSMISSION OIL

Oil type:

TOYOTA GEAR OIL V160 or
ESSO ATF DEXRON®D–21065

Capacity:

1.8 liters (1.9 US qts. 1.6 lmp.qts)

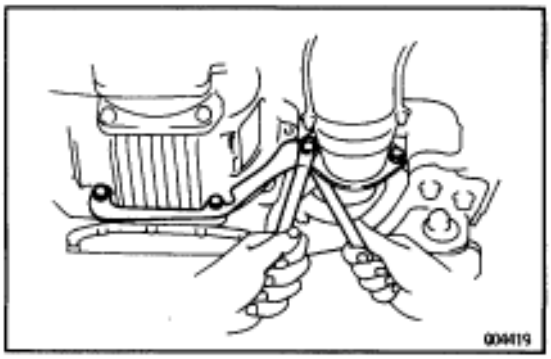

4. REMOVE EXHAUST FRONT PIPE AND PIPE SUPPORT BRACKET

(a) Remove the 2 nuts, heat insulator, oxygen sensor and gasket.
(b) Remove the 2 bolts and nuts.
(c) Remove the 2 bolts and pipe support bracket.
Torque: 43 N·m (440 kgf·cm, 32 ft·lbf)

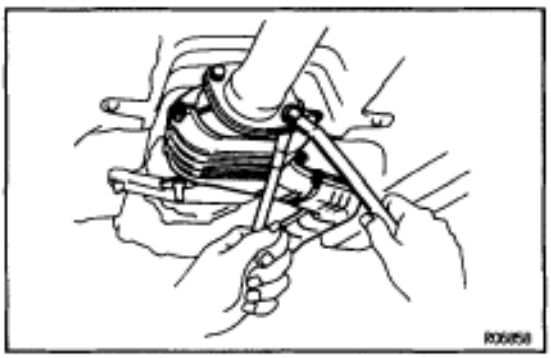

(d) Remove the 2 bolts and nuts.
(e) Remove the exhaust front pipe and gasket.
Torque: 58 N·m (590 kgf·cm, 43 ft·lbf)

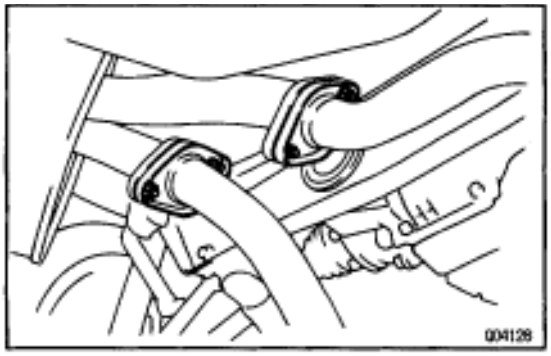

5. REMOVE EXHAUST CENTER PIPE

(a) Remove the 4 nuts.
Torque: 19 N·m (195 kgf·cm, 14 ft·lbf)

(b) Disconnect the exhaust center pipe from the 2 rings.

(c) Remove the exhaust center pipe.

6. REMOVE HEAT INSULATOR

Remove the 4 nuts and heat insulator.
Torque: 5.4 N·m (55 ft·lbf, 48 in.·lbf)

7. REMOVE CROSSMEMBER BRACE

Normal Roof:
Remove the 4 bolts and center floor crossmember brace.
Sport Roof:
Remove the 6 bolts and center floor crossmember brace.
Torque: 13 N·m (130 kgf·cm, 9 ft·lbf)

8. REMOVE PROPELLER SHAFT

(See page PR–7**, 13)**



9. REMOVE TRANSMISSION SHIFT LEVER

(a) Remove the bolt and nut.

(b) Remove the transmission shift lever, inside of vehicle.
Torque: 19 N·m (195 kgf·cm, 14 ft·lbf)

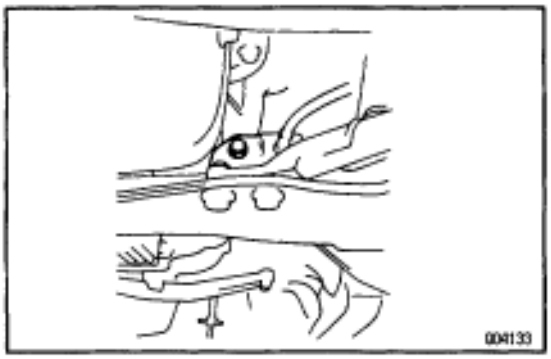

10. REMOVE CLUTCH RELEASE CYLINDER AND GROUND CABLE

(a) Remove the bolt, clamp and ground cable.
Torque: 72 N·m (730 kgf·cm, 53 ft·lbf)

(b) Remove the 2 bolts and clutch release cylinder.
Torque: 12 N·m (120 kgf·cm, 9 ft·lbf)

11. DISCONNECT STARTER WIRE

(a) Remove the nut and disconnect the starter wire.

(b) Disconnect the starter wire connector.

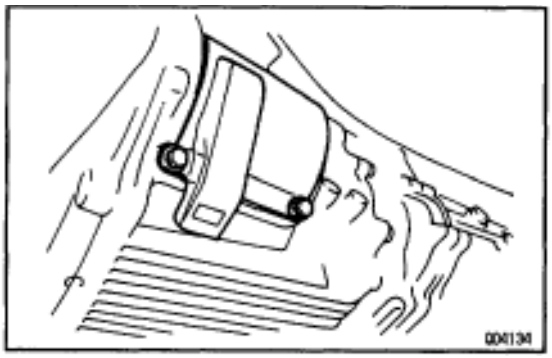

12. DISCONNECT VEHICLE SPEED SENSOR CONNECTOR

13. DISCONNECT BACK–UP LIGHT SWITCH CONNECTOR

14. REMOVE CLUTCH COVER SET BOLTS

(a) Remove the 2 bolts and service hole cover.
Torque: 12 N·m (120 kgf·cm, 9 ft·lbf)

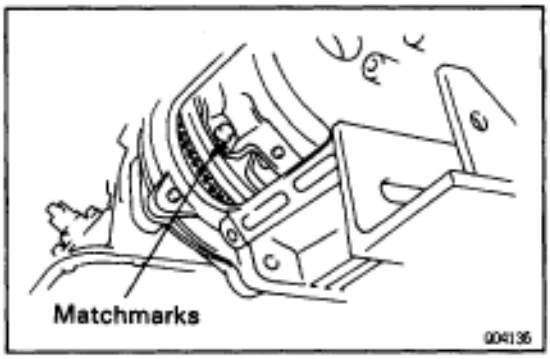

(b) Place matchmarks on the flywheel and clutch cover.

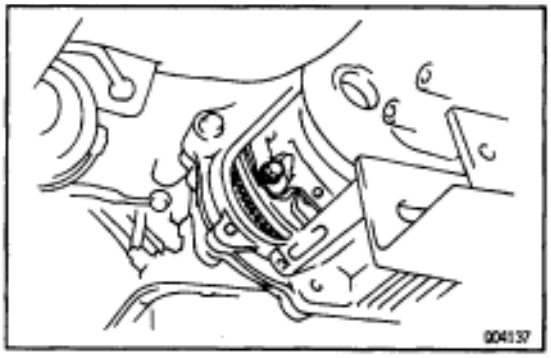

(c) Remove the 6 bolts.
Torque: 19 N·m (195 kgf·cm, 14 ft·lbf)

15. JACK UP TRANSMISSION SLIGHTLY
Using a transmission jack, support the transmission.

16. REMOVE REAR ENGINE MOUNTING MEMBER
Remove the 4 nuts, bolts and rear engine mounting member.
Torque:
·Nut: 13 N·m (135 kgf·cm, 10 ft·lbf)
Bolt: 25 N·m (260 kgf·cm, 19 ft·lbf)

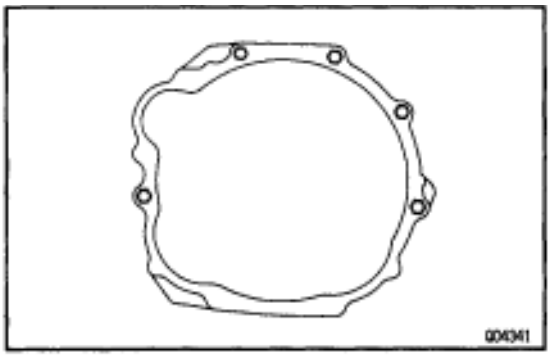

17. REMOVE STARTER
Lower the engine rear side and remove the 2 bolts and starter.
Torque: 39 N·m (400 kgf·cm, 29 ft·lbf)

18. REMOVE TRANSMISSION
Remove the transmission mounting 5 bolts and transmission from the engine.
Torque: 72 N·m (730 kgf·cm, 53 ft·lbf)

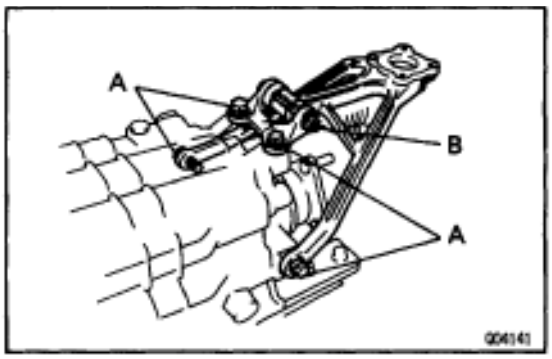

19. REMOVE SHIFT LEVER RETAINER
Remove the 4 bolts and shift lever retainer from the transmission.
Torque:
Bolt A: 19 N·m (195 kgf·cm, 14 ft·lbf)
Bolt B: 25 N·m (250 kgf·cm, 18 ft·lbf)

20. REMOVE ENGINE REAR MOUNTING
Remove the 4 bolts and engine rear mounting from the transmission.
Torque: 25 N·m (250 kgf·cm, 18 ft·lbf)

OIL SEALS
COMPONENTS

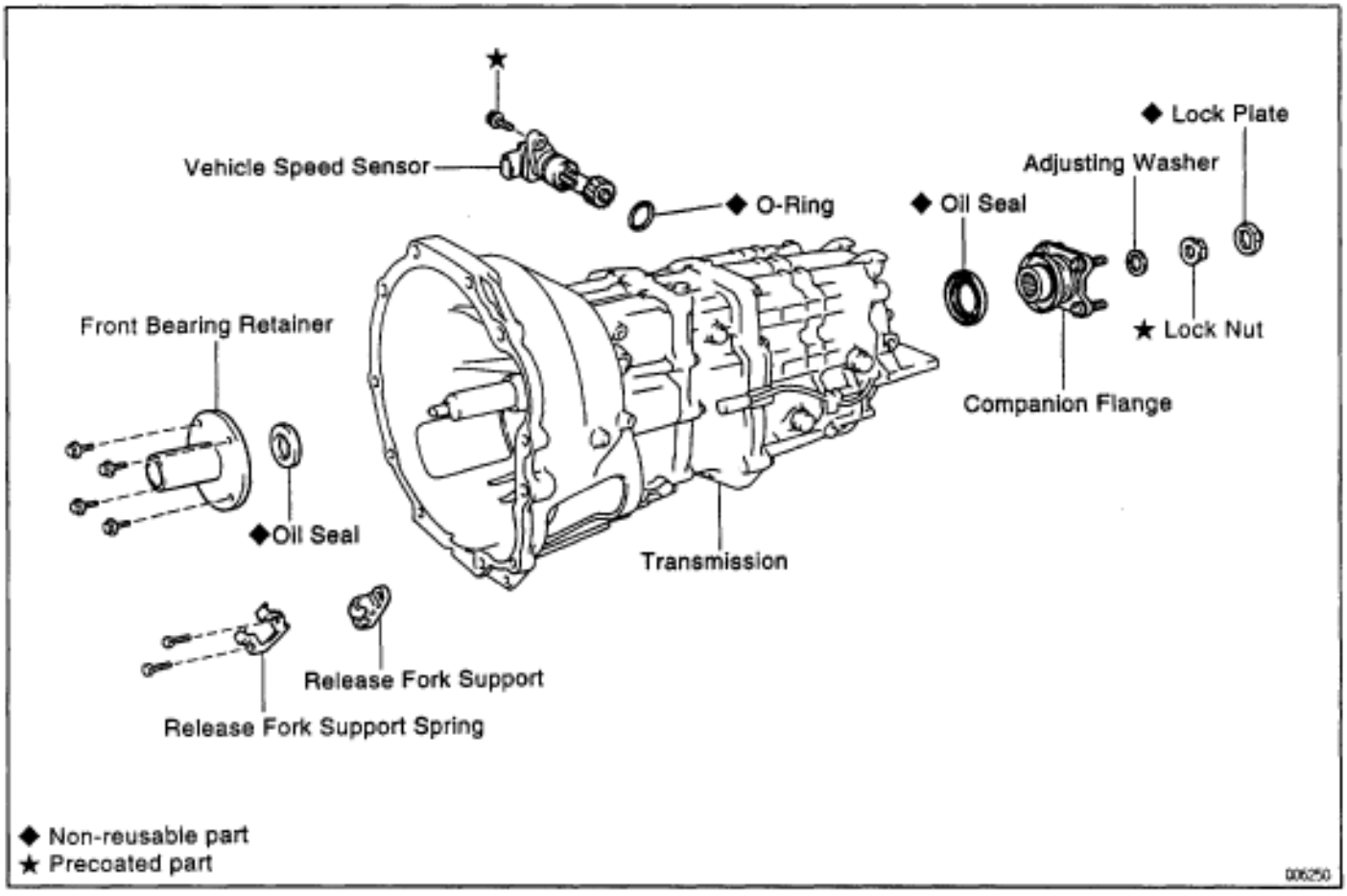

OIL SEAL REPLACEMENT

1. REPLACE TRANSMISSION REAR OIL SEAL

(a) Remove propeller shaft.
(See page PR–7)

(b) Using a screwdriver, remove the lock plate.

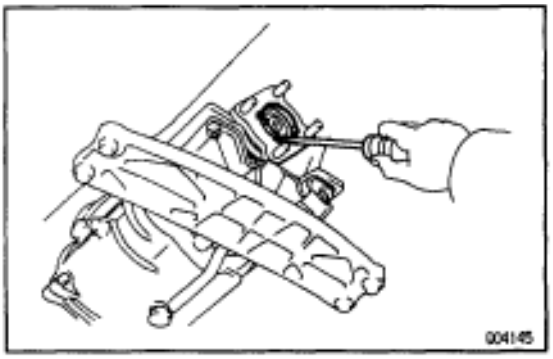

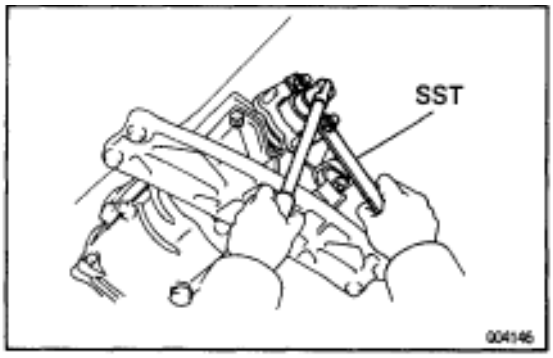

(c) Using SST to hold the flange, remove the lock nut.
SST 09330–00021

(d) Remove the 2 adjusting washers.

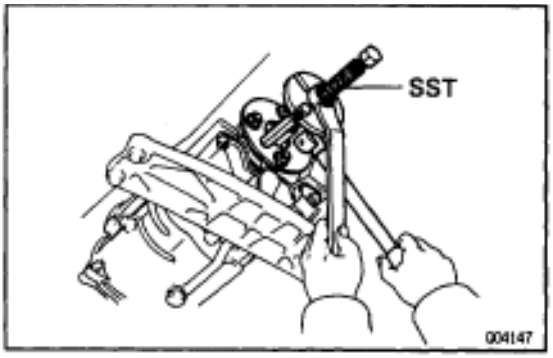

(e) Using SST, remove the companion flange.
SST 09950–30010 (09951–03010, 09953–03010, 09954–03010, 09955–03030, 09956–03030)

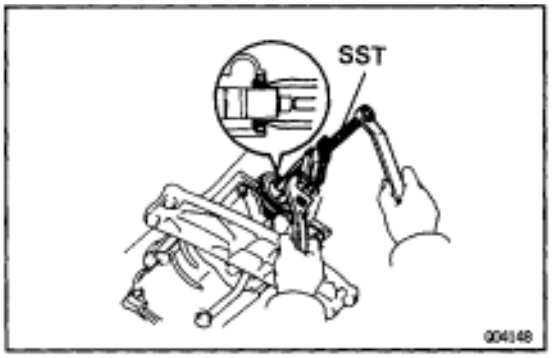

(f) Using SST, remove the oil seal.
SST 09308–10010

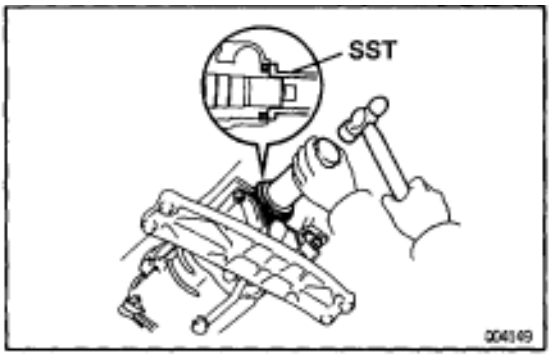

(g) Using SST and a hammer, install a new oil seal.
SST 09308–14010, 09309–14040

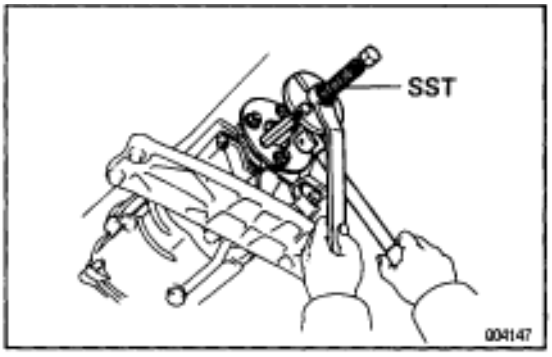

(h) Heat the companion flange in an oven.
80–90°C (176–194°F)

(i) Apply gear oil to the output shaft and install the companion flange.

(j) Using SST, install the companion flange to the output shaft.
SST 09950–30010 (09951–03010, 09953–03010, 09954–03010, 09955–03030, 09956–03030)

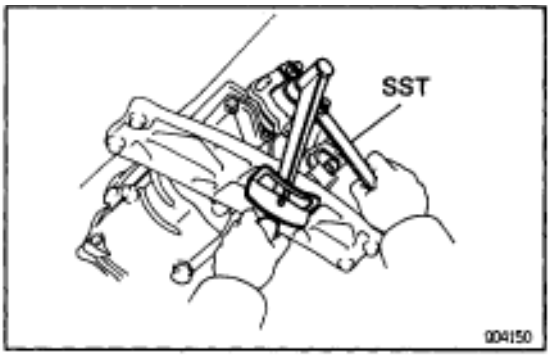

(k) Using SST to hold the flange, install and torque the lock nut.
SST 09330–00021
Torque: 190 N·m (1,940 kgf·cm, 140 ft·lbf)

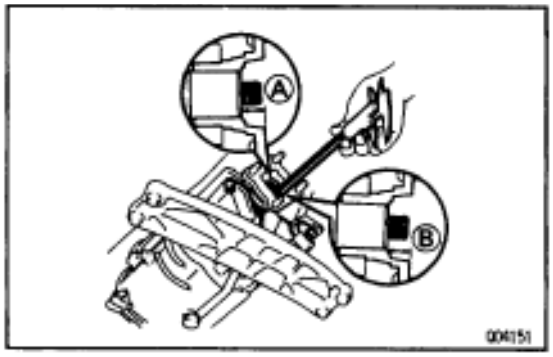

(l) Remove the lock nut.

(m) Using a caliper gauge, measure dimension (A) and dimension (B).

(n) Calculate the required thickness of the adjusting shim.

Thickness:

(Dimension (A)– Dimension (B) – (0.05 ~ 0.14 mm, 0.0020 ~ 0.0055 in.)

Adjusting shim thickness mm (in.)	Adjusting shim thickness mm (in.)
1.15–1.20 (0.0453–0.0472)	1.65–1.70 (0.0650–0.0669)
1.25–1.30 (0.0492–0.0512)	1.85–1.90 (0.0729–0.0748)
1.45–1.50 (0.0571–0.0591)	1.95–2.00 (0.0768–0.0787)

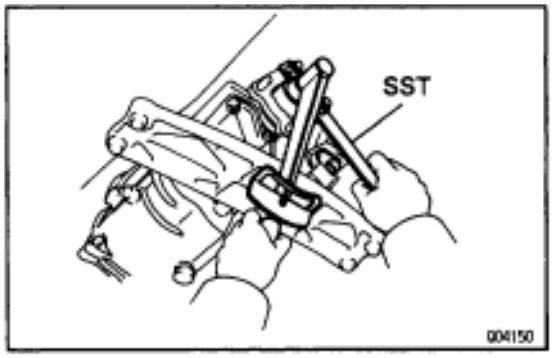

(o) Install the selected shims to the output shaft.

(p) Apply sealant to the nut threads.

Sealant:

Part No.08833–00080, THREE BOND 1344, LOCTITE 242 or equivalent

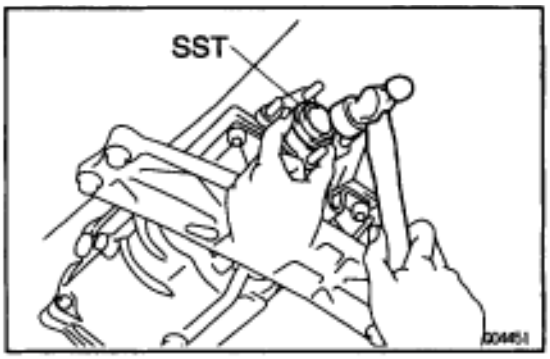

(q) Using SST to hold the flange, reinstall and torque the lock nut.

SST 09330–00021

Torque: 120 N·m (1,220 kgf·cm, 88 ft·lbf)

(r) Using SST and a hammer, install the lock plate.

SST 09309–14010

HINT: If necessary, using a pin punch and hammer tap the lock plate.

(s) Install the propeller shaft.

(See page PR–13)

2. REPLACE TRANSMISSION FRONT OIL SEAL

(a) Remove the transmission.

(See page MT2–4)

(b) Remove the 2 bolts and clutch release fork support.

(c) Remove the 4 bolts and front bearing retainer.

(d) Using a hammer, tap in the screwdriver to the oil seal.

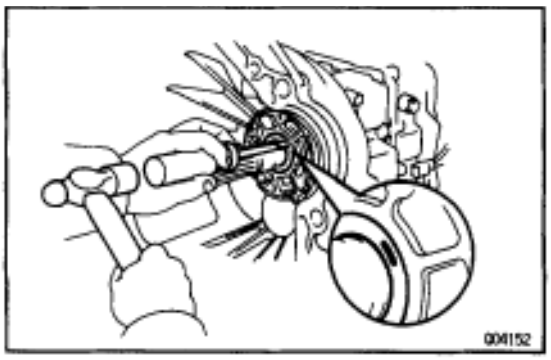

(e) Pry out the oil seal.

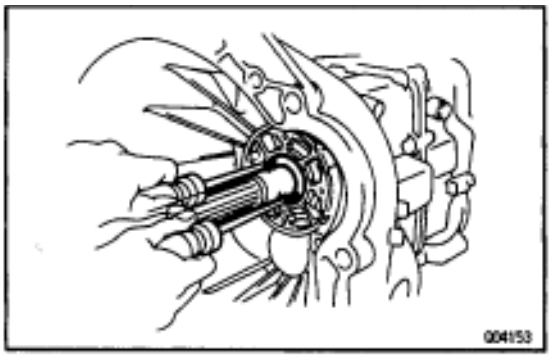

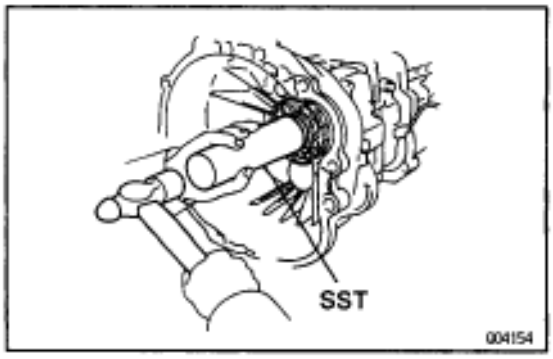

(f) Using SST and a hammer, install a new oil seal.
SST 09308–14010, 09309–14040

(g) Install the transmission.
(See page MT2–4)

(h) Install the front bearing retainer with the 4 bolts.
Torque: 10 N·m (100 kgf·cm, 7 ft·lbf)

(i) Install the clutch release fork support with the 2 bolts.
Torque: 26 N·m (260 kgf·cm, 19 ft·lbf)

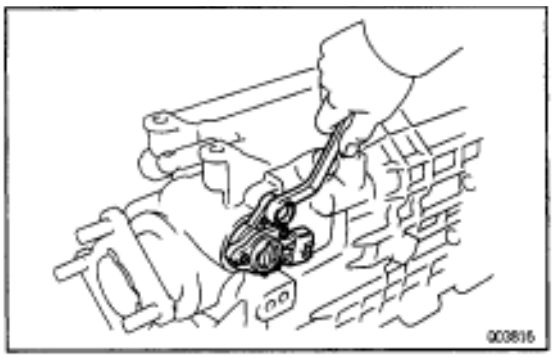

O–RING REPLACEMENT

REPLACE VEHICLE SPEED SENSOR OIL SEAL

(a) Remove the transmission.
(See page MT2–4)

(b) Remove the set bolt and driven gear.

(c) Remove the O–ring from the driven gear.

(d) Install a new O–ring to the driven gear.

(e) Apply sealant to the bolt threads.
Sealant:
Part No.08833–00080, THREE BOND 1344, LOCTITE 242 or equivalent

(f) Install the driven gear with a bolt.
Torque: 11 N·m (110 kgf·cm, 8 ft·lbf)

SERVICE SPECIFICATIONS

SERVICE DATA

Companion flange adjusting shim thickness	1.15–1.20 mm (0.0453–0.0472 in.) 1.25–1.30 mm (0.0492–0.0512 in.) 1.45–1.50 mm (0.0571–0.0591 in.) 1.65–1.70 mm (0.0650–0.0669 in.) 1.85–1.90 mm (0.0729–0.0748 in.) 1.95–2.00 mm (0.0768–0.0787 in.)

TORQUE SPECIFICATIONS

Part tightened	N–m	kgf·cm	ft·lbf
Engine rear mounting x Transmission	25	250	18
Shift lever retainer x Transmission	19	195	14
Transmission x Engine	72	730	53
Starter x Transmission	39	400	29
Rear engine mounting member x Body	25	260	19
Rear engine mounting member x Transmission	13	135	10
Clutch cover x Flywheel	19	195	14
Service hole cover set bolt	12	120	9
Clutch release cylinder set bolt	12	120	9
Shift lever x Control rod	19	195	14
Crossmember brace x Body	13	130	9
Heat insulator x Body	5.4	55	48in.·lbf
Exhaust center pipe x Tail pipe	19	195	14
Exhaust front pipe x Exhaust center pipe	43	440	32
Pipe support bracket x Transmission	37	380	27
Exhaust front pipe x Exhaust manifold	58	590	43
Oxygen sensor set bolt	18	180	13
Shift lever x Shift lever retainer	7.8	80	69 in.·lbf
Clutch release fork support x Transmission	26	260	19
Vehicle speed sensor set bolt	11	110	8
Companion flange lock nut	120	1,220	88
Front bearing retainer set bolt	10	100	7
Clutch release fork support set bolt	26	260	19
Vehicle speed sensor set bolt	11	110	8

W58 MANUAL TRANSMISSION

OPERATION

- The illustrations below show the engagements of transmission gears.

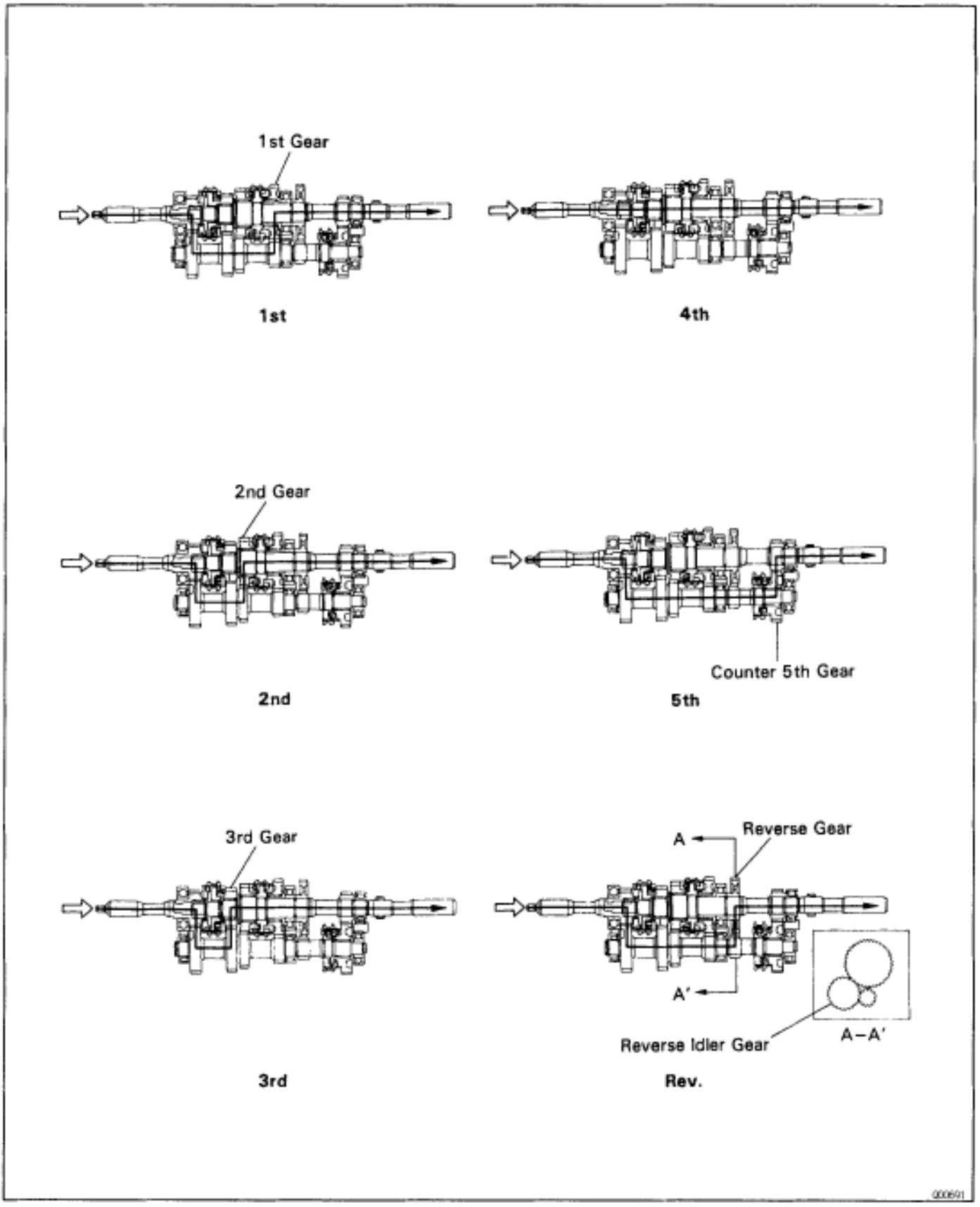

PREPARATION
SST (SPECIAL SERVICE TOOLS

	09304–12012	Input Shaft Front Bearing Replacer	
	09308–00010	Oil Seal Puller	
	09308–10010	Oil Seal Puller	
	09312–20011	Transmission Gear Remover & Replacer	
	(09313–00010)	Reverse Gear Remover	
	(09313–00030)	Rear Bearing Remover	
	(09313–00040)	Plate “A”	
	(09313–00050)	Plate “B”	
	09316–60010	Transmission & Transfer Bearing Replacer	
	(09316–00010)	Replacer Pipe	
	(09316–00070)	Replacer “F”	
	09325–20010	Transmission Oil Plug	
	09506–35010	Differential Drive Pinion Rear Bearing Replacer	Input shaft bearing Output shaft center bearing

	09608–12010	Front Hub & Drive Pinion Bearing Replacer Set
	(09608–00020)	Remover & Replacer Handle
	(09608–00050)	Drive Pinion Front Bearing Cup Replacer — Extension housing outer race
	09608–20012	Front Hub & Drive Pinion Bearing Tool Set
	(09608–00080)	Replacer — Front bearing retainer oil seal
	(09608–03020)	Handle
	09608–35014	Axle Hub & Drive Pinion Bearing Tool Set
	(09608–06020)	Handle
	(09608–06090)	Front Hub Outer & Steering Worm Bearing Replacer — Counter gear bearing outer race
	(09608–06100)	Front Hub Outer Bearing Replacer — Extension housing outer race
	09950–00020	Bearing Remover
	09950–40010	Puller B Set

RECOMMENDED TOOLS

	09031–00030 Pin Punch ◆	
	09042–00020 Torx Socket T40 ◆	
	09905–00012 Snap Ring No.1 Expand ◆	

EQUIPMENT

Calipers	
Dial indicator	
Micrometer	
Torque wrench	
Feeler gauge	

LUBRICANT

Item	Capacity	Classification
Manual transmission oil	2.6 liters (2.7 US qts, 2.3 Imp. qts)	API GL–3, GL–4 or GL–5 SAE 75W–90

SSM (SPECIAL SERVICE MATERIALS)

08826–00090	Seal Packing 1281, THREE BOND 1281 or equivalent (FIPG)	Transmission case x Intermediate plate Front bearing retainer x Transmission case
08833–00080	Adhesive 1344, THREE BOND 1344, LOCTITE 242 or equivalent	Straight screw plug Front bearing retainer bolt

TROUBLESHOOTING

Use the table below to help you find the cause of the problem. The numbers indicate the priority of the likely cause of the problem. Check each part in order. If necessary, replace these parts.

See page / Parts Name / Trouble	–	MT2–2	–	MT1–11	MT1–11	MT1–11	MT1–11	MT1–12	MT1–12	MT1–12	MT1–24,26 34	MT1–26,34				
	Oil (Level low)	Oil (Wrong)	Oil (Level too high)	Gasket (Damaged)	Oil seal (Worn or damaged)	O–Ring (Worn or damaged)	Locking ball spring (Damaged)	Shift fork (Worn)	Gear (Worn or damaged)	Bearing (Worn or damaged)	Synchronizer ring (Worn or damaged)	Shifting key spring (Damaged)				
Noise	1	2							3	3						
Oil leakage			1	2	2	3										
Hard to shift or will not shift											1	2				
Jumps out of gear							1	2	3	3						

PRECAUTION

When working with FIPG material, you must observe the following.

- **Using a razor blade and gasket scraper, remove all the old FIPG material from the gasket surfaces.**
- **Thoroughly clean all components to remove all the loose material.**
- **Clean both sealing surfaces with a non–residue solvent.**
- **Apply the FIPG in an approx. 1 mm (0.04 in.) wide bead along the sealing surface.**
- **Parts must be assembled within 10 minutes of application. Otherwise, the FIPG material must be removed and reapplied.**

TROUBLESHOOTING

Use the table below to help you find the cause of the problem. The numbers indicate the priority of the likely cause of the problem. Check each part in order. If necessary, replace these parts.

See page / Parts Name / Trouble	–	MT2–2	–	MT1–11	MT1–11	MT1–11	MT1–11	MT1–12	MT1–12	MT1–12	MT1–24,26 34	MT1–26,34				
	Oil (Level low)	Oil (Wrong)	Oil (Level too high)	Gasket (Damaged)	Oil seal (Worn or damaged)	O–Ring (Worn or damaged)	Locking ball spring (Damaged)	Shift fork (Worn)	Gear (Worn or damaged)	Bearing (Worn or damaged)	Synchronizer ring (Worn or damaged)	Shifting key spring (Damaged)				
Noise	1	2							3	3						
Oil leakage			1	2	2	3										
Hard to shift or will not shift											1	2				
Jumps out of gear							1	2	3	3						

PRECAUTION

When working with FIPG material, you must observe the following.

- **Using a razor blade and gasket scraper, remove all the old FIPG material from the gasket surfaces.**
- **Thoroughly clean all components to remove all the loose material.**
- **Clean both sealing surfaces with a non–residue solvent.**
- **Apply the FIPG in an approx. 1 mm (0.04 in.) wide bead along the sealing surface.**
- **Parts must be assembled within 10 minutes of application. Otherwise, the FIPG material must be removed and reapplied.**

ASSEMBLY REMOVAL AND INSTALLATION

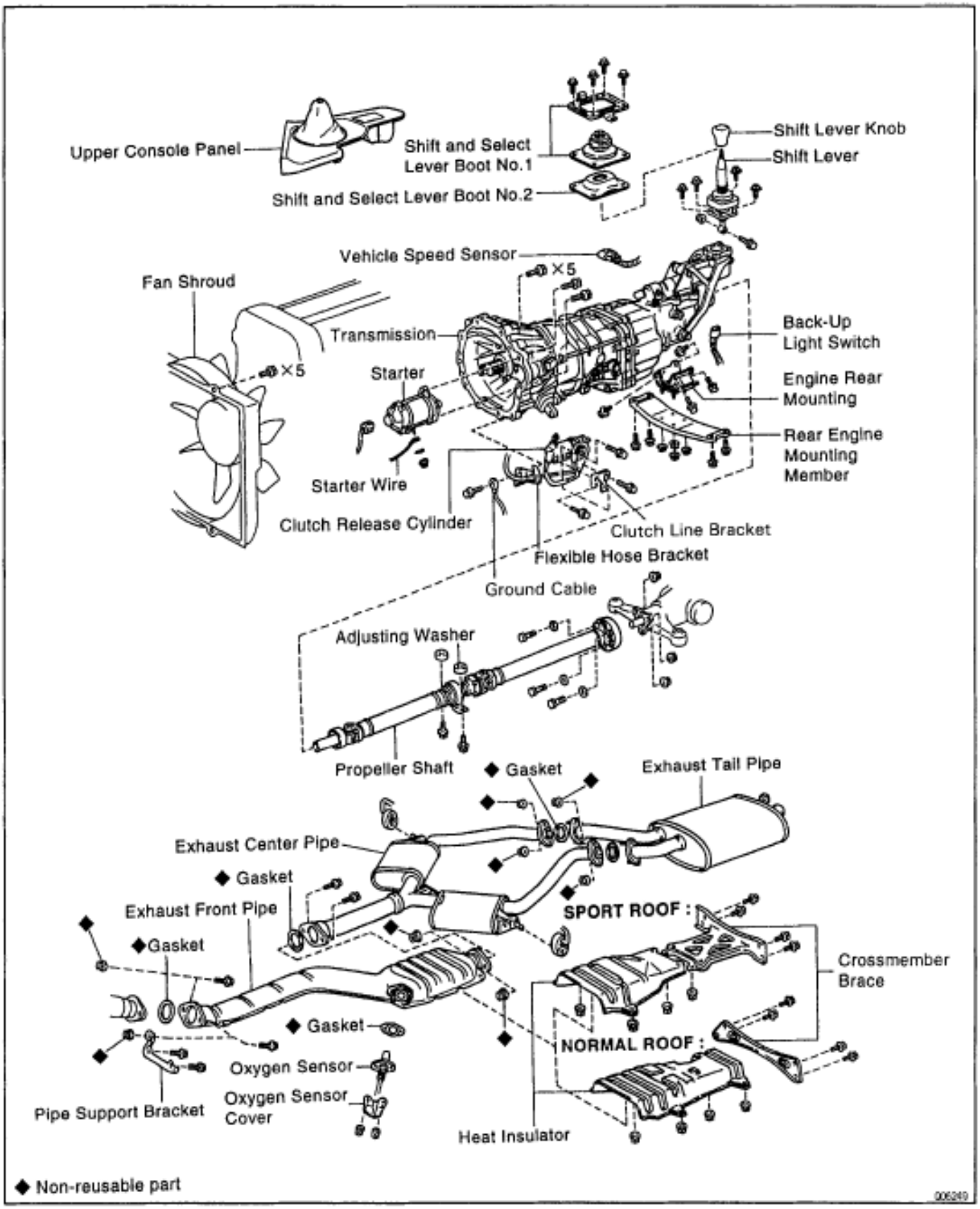

TRANSMISSION REMOVAL

Installation is in the reverse order of removal.

INSTALLATION HINT: After installation, check and inspect item as follows.

- Road test the vehicle.

1. REMOVE FAN SHROUD SET BOLTS

Remove the 5 bolts.

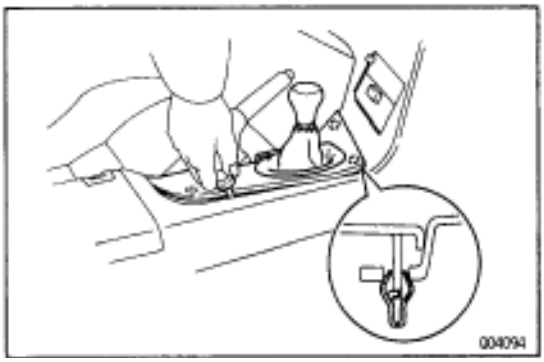

2. REMOVE UPPER CONSOLE PANEL, SHIFT LEVER BOOT AND MOUNTING BOLTS

(a) Remove the shift lever knob.

(b) Using a screwdriver, pry out the upper console panel.

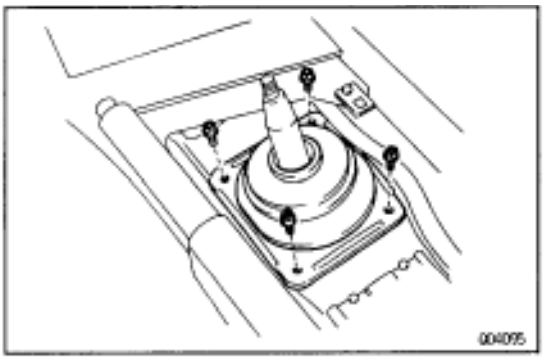

(c) Remove the 4 mounting bolts.

(d) Remove the shift and select lever boot No.1 and No.2.

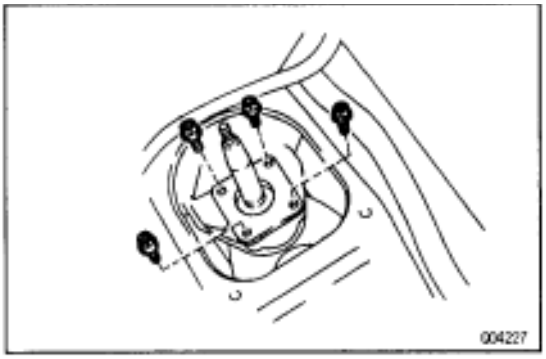

(e) Remove the 4 mounting bolts.

Torque: 7.8 N·m (80 kgf·cm, 69 in.·lbf)

3. RAISE VEHICLE

NOTICE: Be sure the vehicle is securely supported.

4. DRAIN TRANSMISSION OIL

Oil grade:

API GL–3, GL–4 or GL–5

Viscosity:

SAE 75W–90

Capacity:

2.6 liters (2.7 US qts, 2.3 Imp.qts)

5. REMOVE EXHAUST FRONT PIPE AND PIPE SUPPORT BRACKET

(a) Remove the 2 nuts, cover and oxygen sensor.

Torque: 18 N·m (180 kgf·cm, 13 ft·lbf)

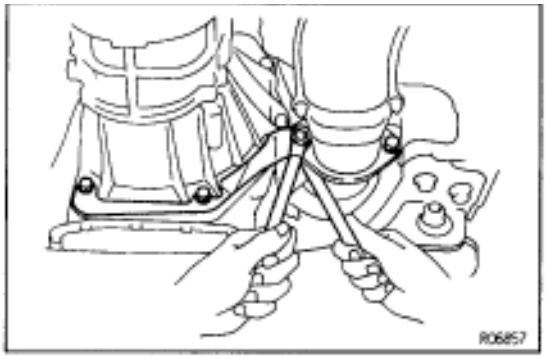

(b) Remove the 2 bolts and nuts.
Torque: 43 N·m (440 kgf·cm, 32 ft·lbf)
(c) Remove the 2 bolts and pipe support bracket.
Torque: 37 N·m (380 kgf·cm, 27 ft·lbf)

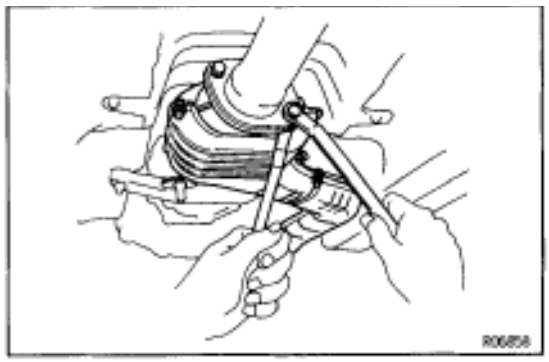

(d) Remove the 2 bolts and nuts.
Torque: 43 N·m (440 kgf·cm, 32 ft·lbf)
(e) Remove the exhaust front pipe.



6. REMOVE EXHAUST CENTER PIPE
(a) Remove the 4 nuts.
Torque: 19 N·m (195 kgf·cm, 14 ft·lbf)
(b) Disconnect the exhaust center pipe from the 2 rings.
(c) Remove the exhaust center pipe.
7. REMOVE HEAT INSULATOR
Remove the 4 nuts and heat insulator.
Torque: 5.4 N·m (55 kgf·cm, 48 in.·lbf)
8. REMOVE CROSSMEMBER BRACE
Normal Roof:
Remove the 4 bolts and center floor crossmember brace.
Sport Roof:
Remove the 6 bolts and center floor crossmember brace.
Torque: 13 N·m (130 kgf·cm, 9 ft·lbf)
9. REMOVE PROPELLER SHAFT
(See page PR–7, 13)

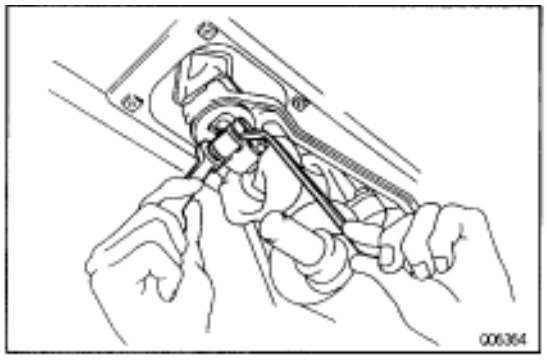

10. REMOVE TRANSMISSION SHIFT LEVER
(a) Remove the bolt and nut.
Torque: 19 N·m (195 kgf·cm, 14 ft·lbf)
(b) Remove the transmission shift lever, inside the vehicle.

11. REMOVE CLUTCH RELEASE CYLINDER AND GROUND CABLE

(a) Remove the 2 bolts and clutch release cylinder.
Torque: 13 N·m (130 kgf·cm, 9 ft·lbf)

(b) Remove the bolt, ground cable and flexible hose bracket.
Torque: 37 N·m (380 kgf·cm, 27 ft·lbf)

12. REMOVE STARTER

(a) Remove the nut and disconnect the starter wire.

(b) Disconnect the starter wire connector.

(c) Remove the 2 bolts and starter.
Torque: 39 N·m (400 kgf·cm, 29 ft·lbf)

13. DISCONNECT BACK–UP LIGHT SWITCH CONNECTOR

14. DISCONNECT VEHICLE SPEED SENSOR CONNECTOR

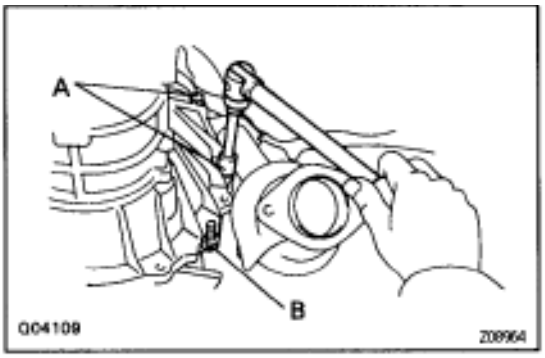

15. REMOVE TRANSMISSION MOUNTING BOLTS

Remove the 3 transmission mounting bolts.
Torque:
Bolt A: 72 N·m (730 kgf·cm, 53 ft·lbf)
Bolt B: 37 N·m (380 kgf·cm, 27 ft·lbf)

16. JACK UP TRANSMISSION SLIGHTLY

Using a transmission jack, support the transmission.

17. REMOVE REAR ENGINE MOUNTING MEMBER

(a) Remove the 4 bolts and nuts.
Torque:
Nut: 13 N·m (135 kgf·cm, 10 ft·lbf)
Bolt: 25 N·m (260 kgf·cm, 19 ft·lbf)

(b) Remove the rear engine mounting member.

18. REMOVE ENGINE REAR MOUNTING

Remove the 3 bolts and engine rear mounting from the transmission.
Torque: 25 N·m (250 kgf·cm, 18 ft·lbf)

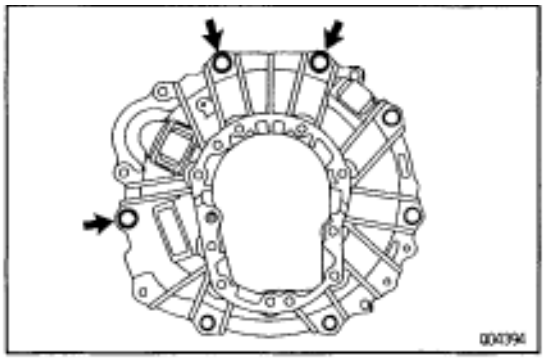

19. REMOVE TRANSMISSION

(a) Remove the 3 remaining transmission mounting bolts.
Torque: 72 N·m (730 kgf·cm, 53 ft·lbf)

(b) Lower the engine rear side and remove the transmission from the engine.

COMPONENT PARTS REMOVAL

COMPONENTS

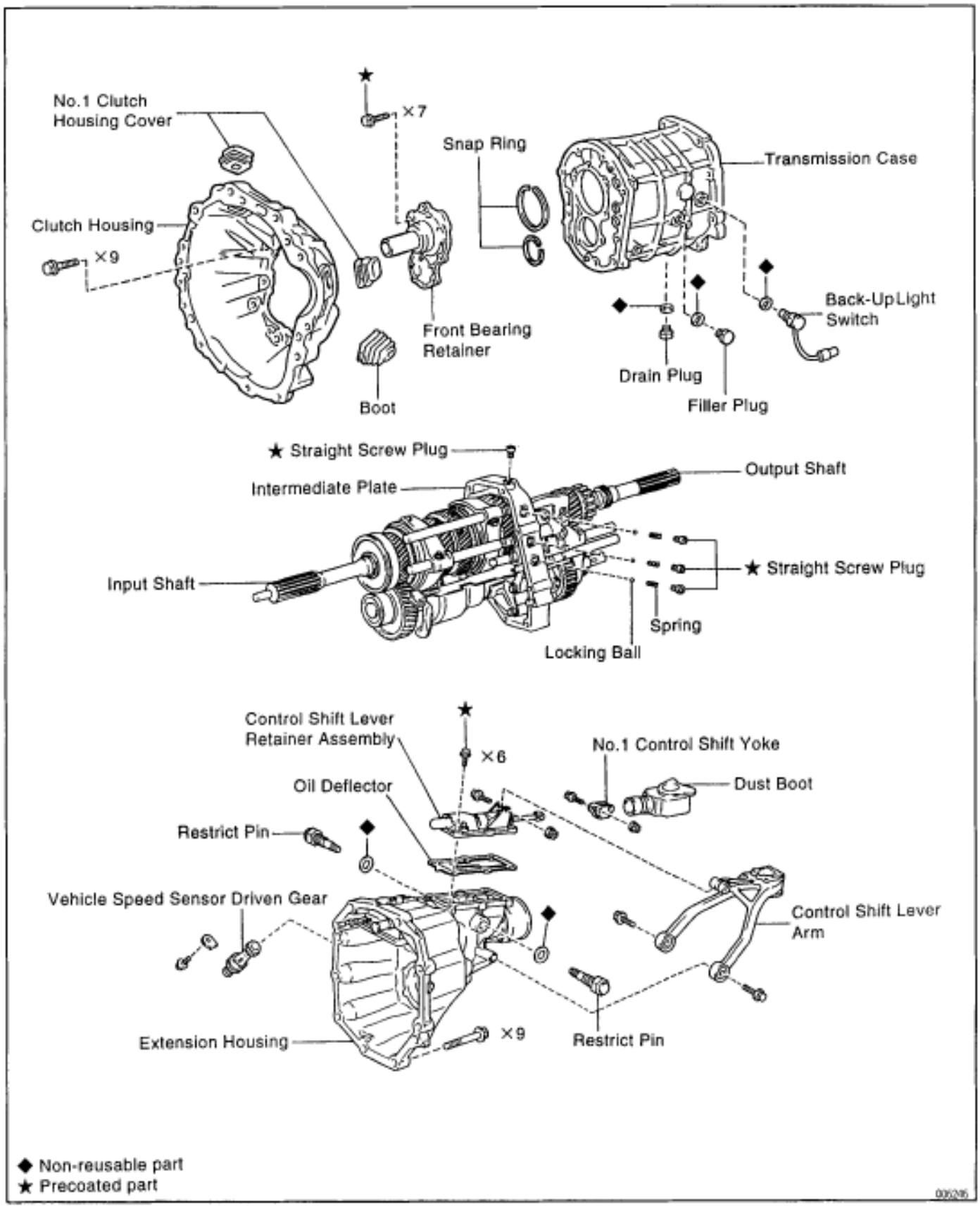

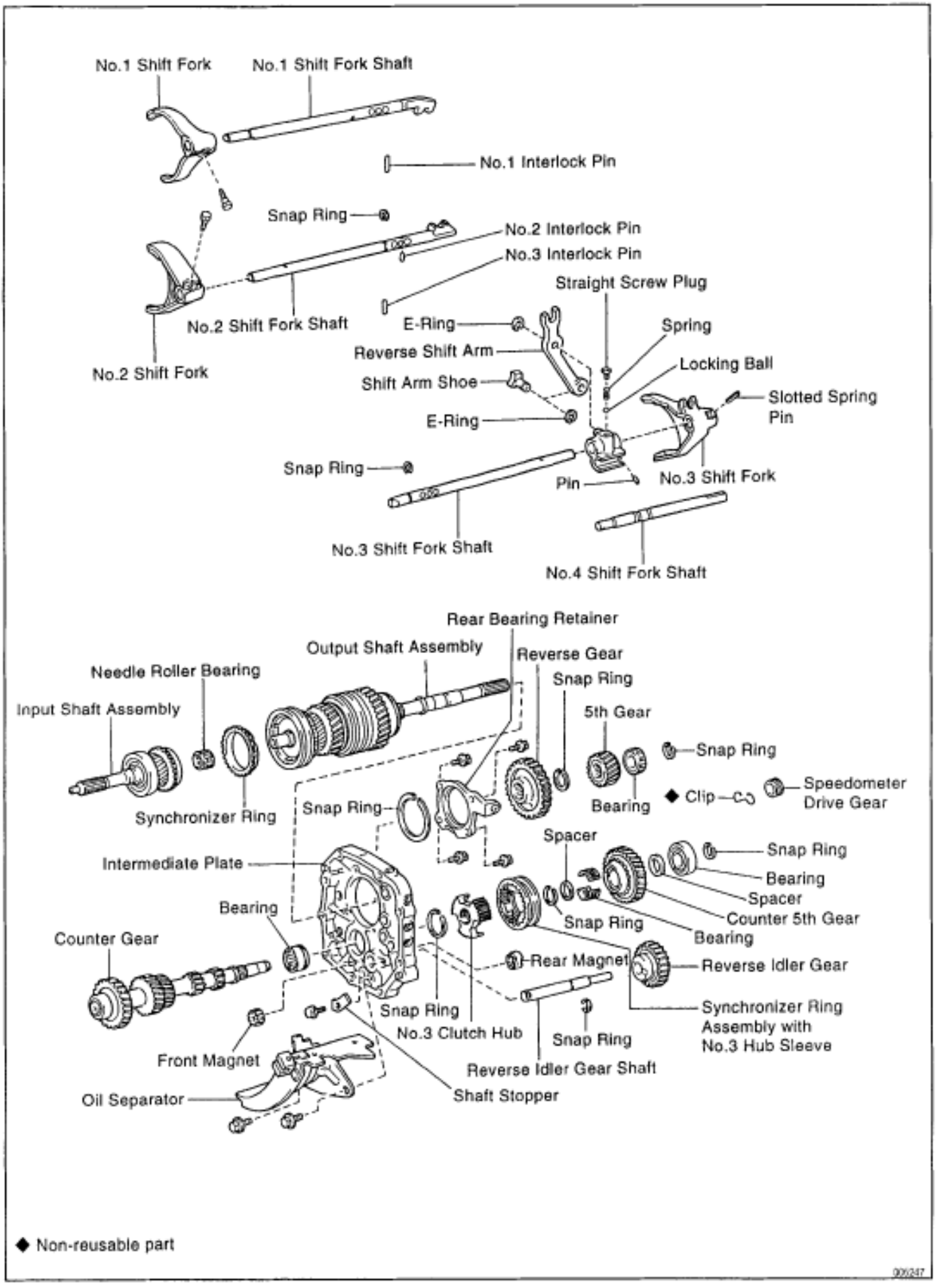
No.1 Shift Fork
No.1 Shift Fork Shaft
No.1 Interlock Pin
Snap Ring
No.2 Interlock Pin
No.3 Interlock Pin
Straight Screw Plug
No.2 Shift Fork Shaft
E-Ring
Spring
Reverse Shift Arm
Locking Ball
No.2 Shift Fork
Shift Arm Shoe
Slotted Spring Pin
E-Ring
Snap Ring
Pin
No.3 Shift Fork
No.3 Shift Fork Shaft
No.4 Shift Fork Shaft
Rear Bearing Retainer
Output Shaft Assembly
Reverse Gear
Needle Roller Bearing
Snap Ring
Input Shaft Assembly
5th Gear
Snap Ring
◆ Clip
Speedometer Drive Gear
Synchronizer Ring
Snap Ring
Bearing
Spacer
Intermediate Plate
Snap Ring
Bearing
Spacer
Counter 5th Gear
Bearing
Snap Ring
Bearing
Counter Gear
Rear Magnet
Reverse Idler Gear
Synchronizer Ring Assembly with No.3 Hub Sleeve
Snap Ring
No.3 Clutch Hub
Snap Ring
Front Magnet
Reverse Idler Gear Shaft
Shaft Stopper
Oil Separator
◆ Non-reusable part
00247

BASIC SUBASSEMBLY SEPARATION

Assembly is in the reverse order of separation.

1. REMOVE BACK–UP LIGHT SWITCH

Torque: 40 N·m (410 kgf·cm, 30 ft·lbf)

2. REMOVE VEHICLE SPEED SENSOR DRIVEN GEAR

Torque: 13 N·m (130 kgf·cm, 9 ft·lbf)

3. REMOVE CLUTCH HOUSING FROM TRANSMISSION CASE

Remove the 9 bolts and clutch housing from the transmission case.

Torque: 37 N·m (380 kgf·cm, 27 ft·lbf)

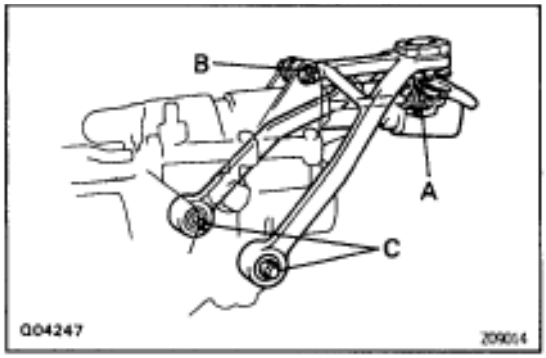

4. REMOVE CONTROL SHIFT LEVER ARM, DUST BOOT AND NO. 1 CONTROL SHIFT YOKE

(a) Remove the 3 mounting bolts and control shift lever arm.

Torque:

Bolt B: 25 N·m (250 kgf·cm, 18 ft·lbf)

Bolt C: 19 N·m (195 kgf·cm, 14 ft·lbf)

(b) Remove the dust boot.

(c) Remove the bolt and No. 1 control shift yoke from the control shaft.

Torque:

Bolt A: 19 N·m (195 kgf·cm, 14 ft·lbf)

5. REMOVE CONTROL SHIFT LEVER RETAINER ASSEMBLY

(a) Remove the 6 bolts.

Torque: 18 N·m (185 kgf·cm, 13 ft·lbf)

(b) Remove the control shift lever retainer assembly and oil deflector.

6. REMOVE 2 RESTRICT PINS

INSTALLATION HINT: Install the black pin on the reverse gear/5th gear side.

Torque: 40 N·m (410 kgf·cm, 30 ft·lbf)

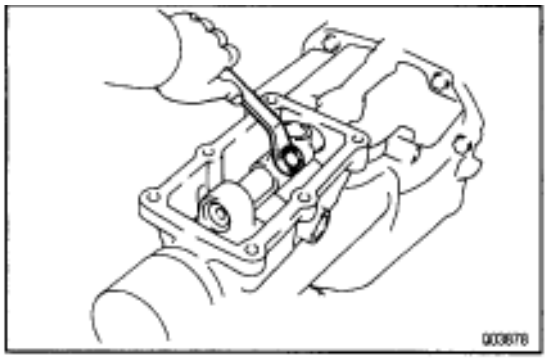

7. REMOVE EXTENSION HOUSING

(a) Remove the shift lever housing set bolt.

Torque: 39 N·m (400 kgf·cm, 29 ft·lbf)

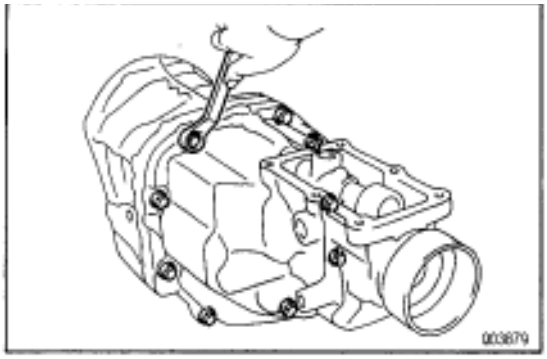

(b) Remove the 9 bolts.
Torque: 37 N·m (380 kgf·cm, 27 ft·lbf)

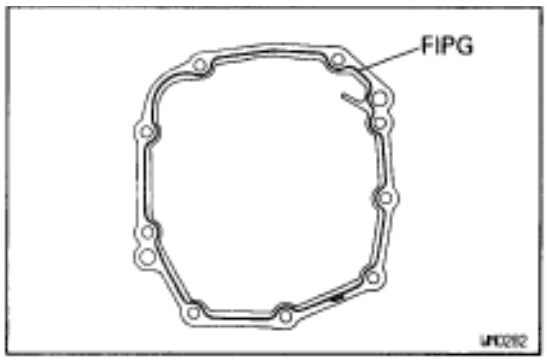

INSTALLATION HINT:
- Remove any FIPG material and be careful not to drop oil on the contacting surface of the transmission case or intermediate plate.
- Apply FIPG to the transmission case, as shown.

FIPG:
Part No.08826–00090, THREE BOND 1281 or equivalent
- Align each bearing outer race and each shift fork shaft end with the case holes.
- Using a plastic hammer, tap on the case to install it.

(c) Using a plastic hammer, carefully tap the extension housing.
(d) Disengage the shift and select lever from the shift head.
(e) Pull out the extension housing.

8. REMOVE FRONT BEARING RETAINER AND BEARING SNAP RINGS

(a) Remove the 7 bolts and front bearing retainer.
Torque: 25 N·m (250 kgf·cm, 18 ft·lbf)

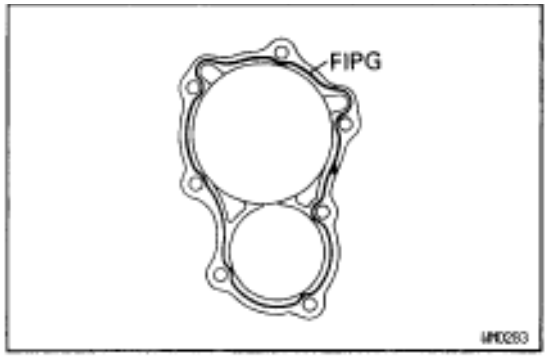

INSTALLATION HINT:
- Remove any FIPG material and be careful not to drop oil on the contacting surface of the front bearing retainer or transmission case.
- Apply FIPG to the retainer, as shown and install it to the transmission case.

FIPG:
Part No.08826–00090, THREE BOND 1281 or equivalent
- Apply sealant to the bolt threads.

Sealant:
Part No.08833–00080, THREE BOND 1344, LOCTITE 242 or equivalent

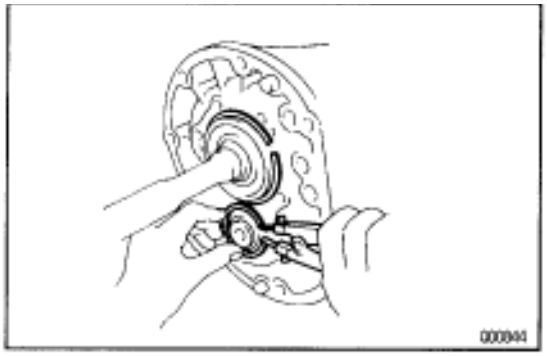

(b) Using a snap ring expander, remove the 2 bearing snap rings.

9. SEPARATE INTERMEDIATE PLATE FROM TRANSMISSION CASE

(a) Using a plastic hammer, carefully tap the transmission case.

(b) Pull the transmission case from the intermediate plate.

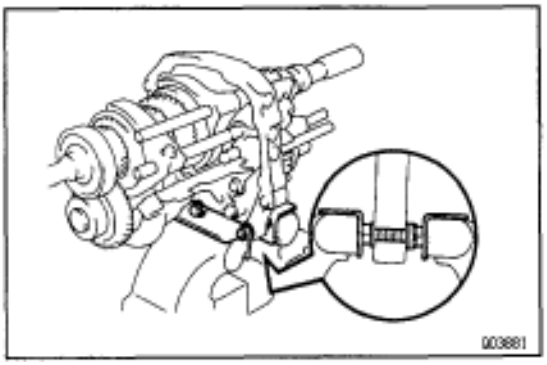

10. MOUNT INTERMEDIATE PLATE IN VISE

(a) Use the 2 long clutch housing bolts, plate washers and suitable nuts, as shown.

NOTICE: Increase or decrease plate washers so that the bolt tip does not stand proud of the nut.

(b) Mount the intermediate plate in a vise.

11. REMOVE OIL SEPARATOR

Remove the 2 bolts and oil separator.

Torque: 18 N·m (185 kgf·cm, 13 ft·lbf)

12. REMOVE FRONT MAGNET

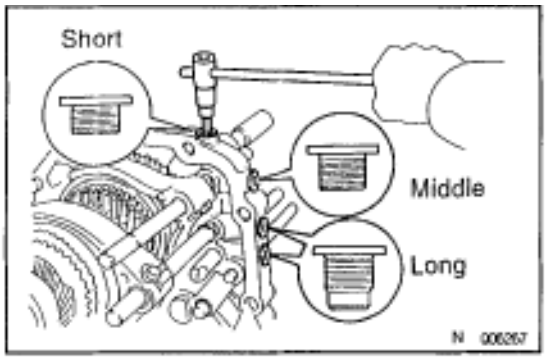

13. REMOVE LOCKING BALL AND SPRING

(a) Using a hexagon wrench, remove the 4 straight screw plugs.

Torque: 25 N·m (250 kgf·cm, 18 ft·lbf)

INSTALLATION HINT: Apply sealant to the plug threads.

Sealant:

Part No.08833–00080, THREE BOND 1344, LOC–TITE 242 or equivalent

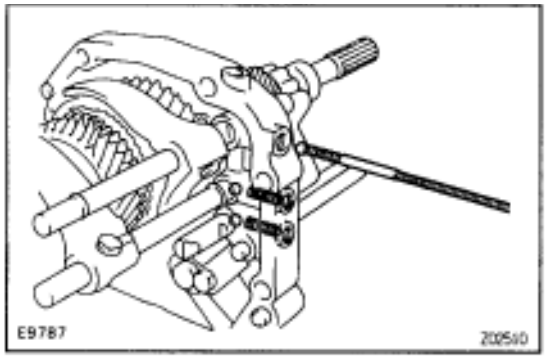

(b) Using a magnetic finger, remove the 3 springs and balls.

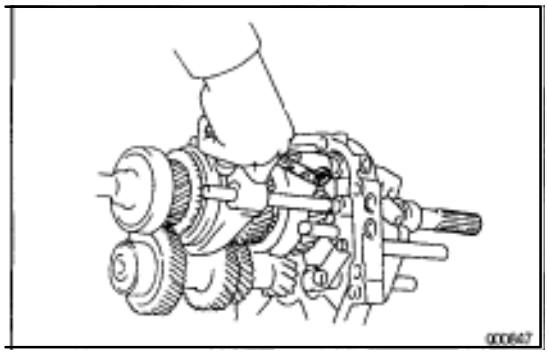

14. REMOVE SHIFT FORKS, SHIFT FORK SHAFTS AND REVERSE IDLER GEAR

(a) Remove the No. 1 shift fork set bolt.

Torque: 20 N·m (200 kgf·cm, 14 ft·lbf)

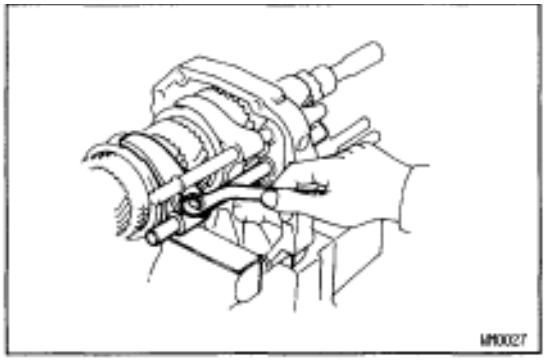

(b) Remove the No.2 shift fork set bolt.
Torque: 20 N·m (200 kgf·cm, 14 ft·lbf)

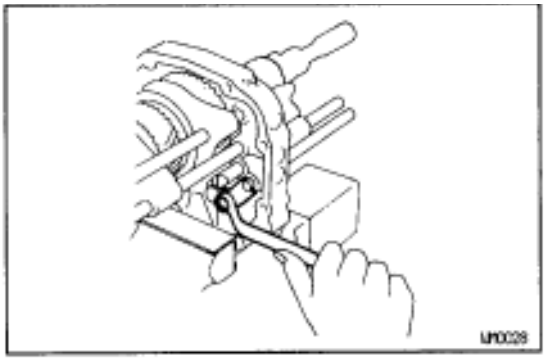

(c) Remove the bolt and reverse idler gear shaft stopper.
Torque: 25 N·m (250 kgf·cm, 18 ft·lbf)

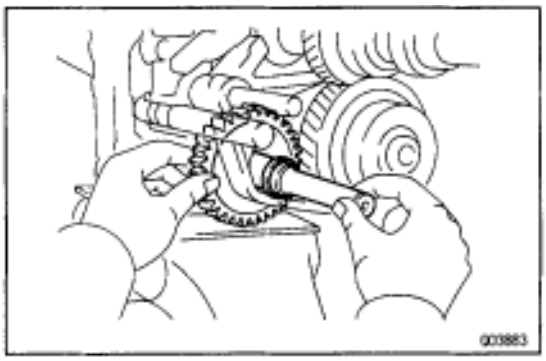

(d) Remove the reverse idler gear and shaft with the snap ring.

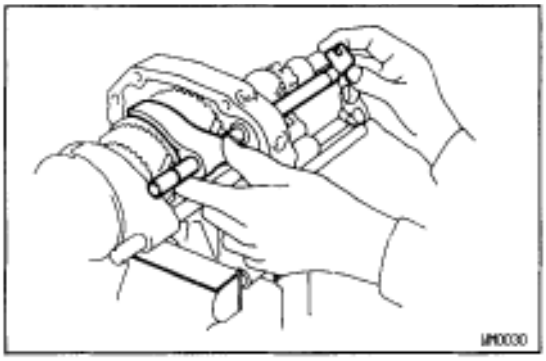

(e) Remove the No.1 shift fork and shaft.

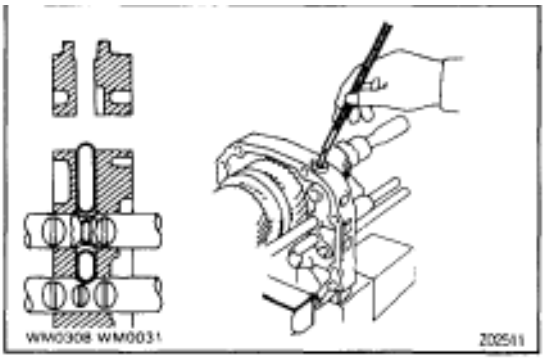

(f) Using a magnetic finger, remove the No.1 and No.2 interlock pins.
INSTALLATION HINT: Apply MP grease to the No.1 and No.2 interlock pins.

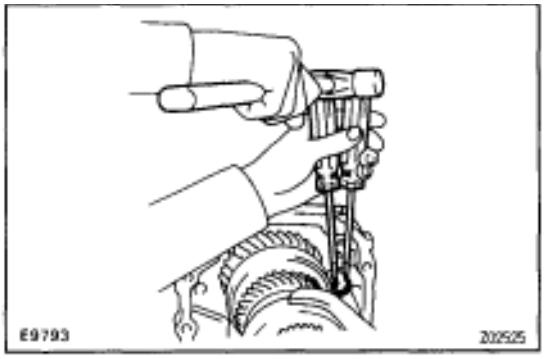

(g) Using 2 screwdrivers and a hammer, tap out the snap ring of No. 2 shaft.

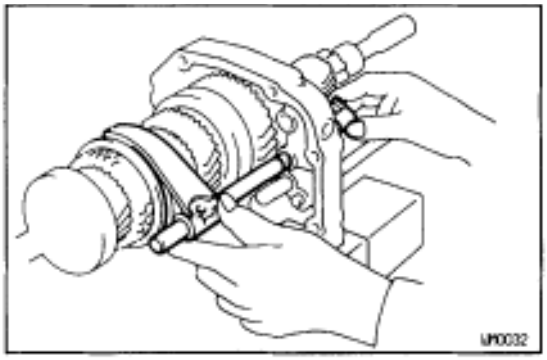

(h) Remove the No. 2 shift fork and shaft.

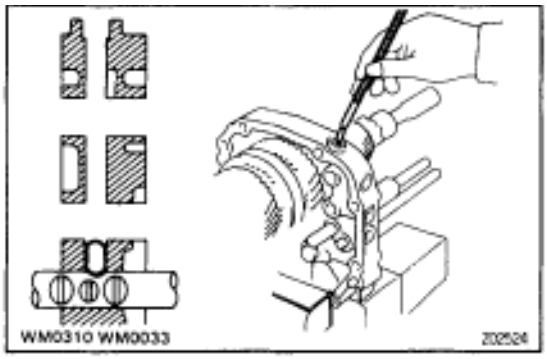

(i) Using a magnetic finger, remove the No.3 interlock pin.
INSTALLATION HINT: Apply MP grease to the No.3 interlock pin.

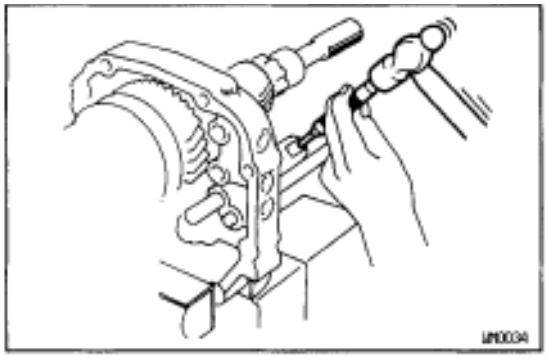

(j) Using a pin punch and hammer, drive out the No. 3 fork shaft pin.

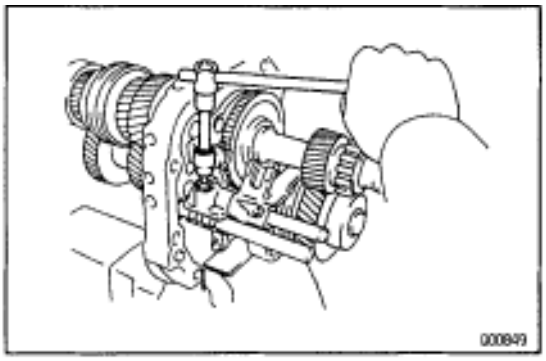

(k) Using a hexagon wrench, remove the plug.
Torque: 25 N·m (250 kgf·cm, 18 ft·lbf)
INSTALLATION HINT: Apply sealant to the plug.
Sealant:
Part No.08833–00080, THREE BOND 1344, LOCTITE 242 or equivalent

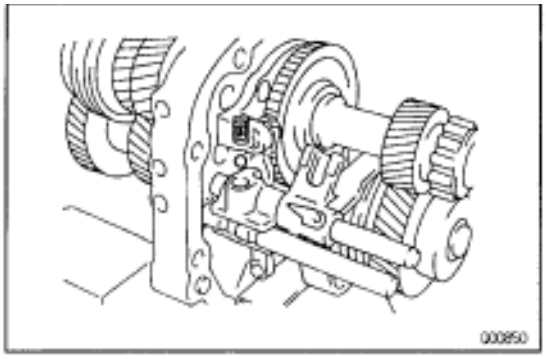

(l) Using a magnetic finger, remove the spring and ball.

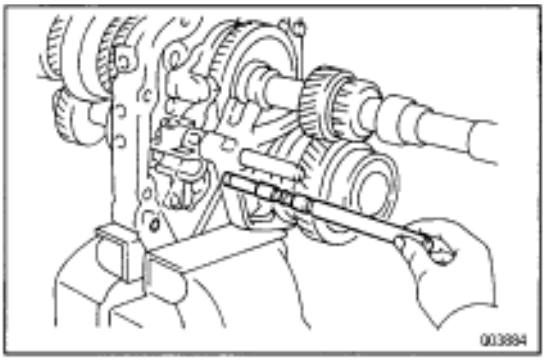

(m) Pull out the No.4 shift fork shaft.
(n) Remove the interlock pin.

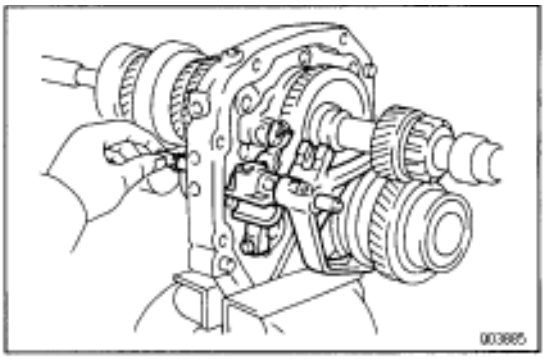

(o) Remove the No.3 shift fork, fork shaft and reverse shift arm with the snap ring.

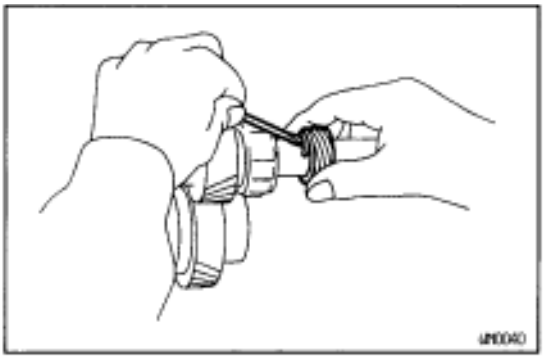

15. REMOVE SPEEDOMETER DRIVE GEAR

Pry out both ends of the clip and remove the drive gear.

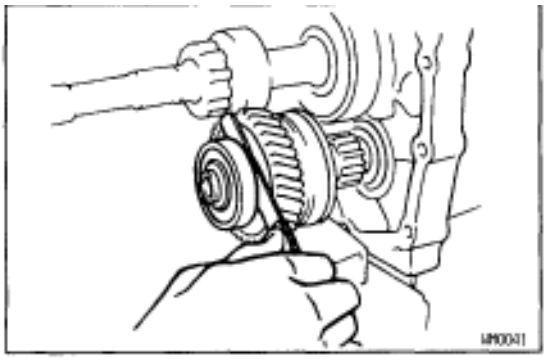

16. INSPECT COUNTER 5TH GEAR THRUST CLEARANCE

Using a feeler gauge, measure the counter 5th gear thrust clearance.

Standard clearance:

0.10–0.41 mm (0.0039–0.0161 in.)

Maximum clearance:

0.46 mm (0.0181 in.)

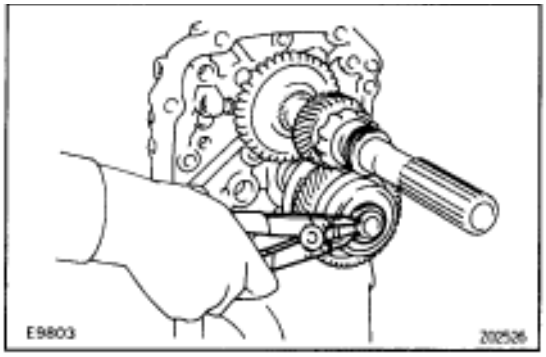

17. REMOVE COUNTER REAR BEARING, SPACER, COUNTER 5TH GEAR AND NEEDLE ROLLER BEARING

(a) Using a snap ring expander, remove the snap ring.
INSTALLATION HINT: Select a snap ring that will allow minimum axial play.

Mark	Thickness mm (in.)
1	1.90–1.95 (0.0748–0.0768)
2	1.96–2.01 (0.0772–0.0791)
3	2.02–2.07 (0.0795–0.0815)
4	2.08–2.13 (0.0819–0.0839)
5	2.14–2.19 (0.0843–0.0862)
6	2.20–2.25 (0.0866–0.0886)
7	2.26–2.31 (0.0890–0.0909)

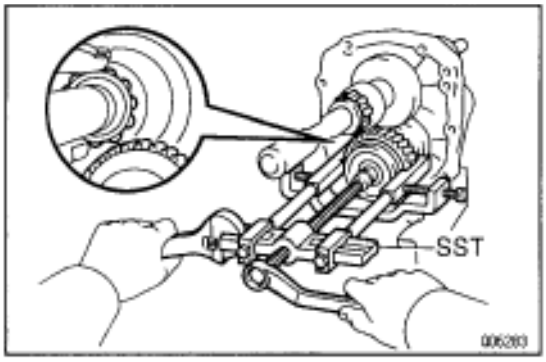

(b) Using SST, remove the rear bearing, spacer, 5th gear and bearing.
SST 09950–40010
NOTICE: Be careful not to catch the output shaft rear bearing roller on the counter 5th gear.
INSTALLATION HINT:
- Install the needle roller bearing to the counter 5th gear.
- Install the counter 5th gear with the 5th gear gaps aligned with the synchronizer corn ring pin.

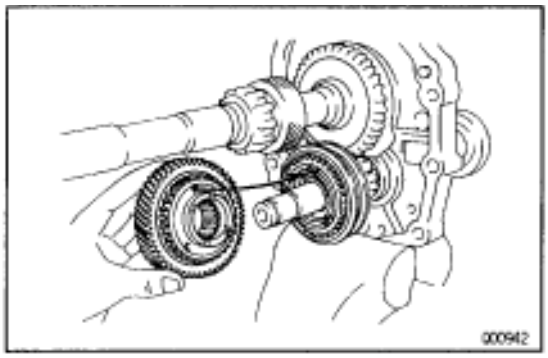

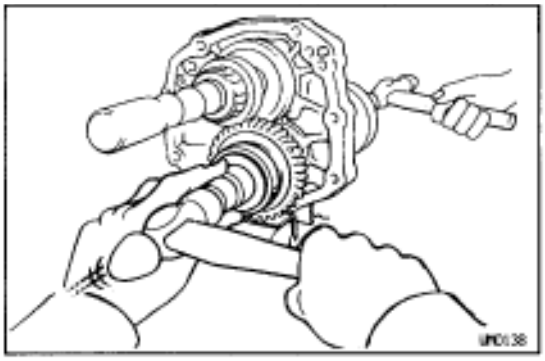

INSTALLATION HINT:
- Using a socket wrench and hammer, drive in the bearing.
- When driving in the bearing, support the counter shaft in front with 3–5 lb hammer or equivalent.

(c) Remove the spacer.

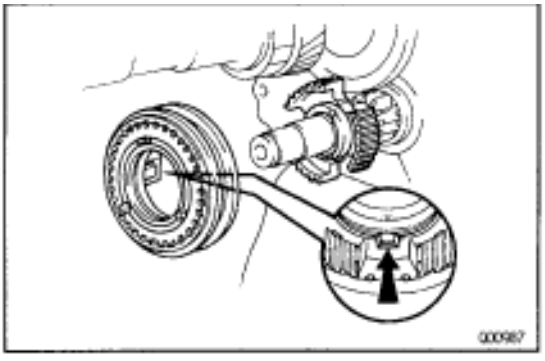

18. REMOVE SYNCHRONIZER RING ASSEMBLY WITH NO.3 HUB SLEEVE AND NO.3 CLUTCH HUB

(a) Remove the synchronizer ring assembly with the No.3 hub sleeve from the No.3 clutch hub.

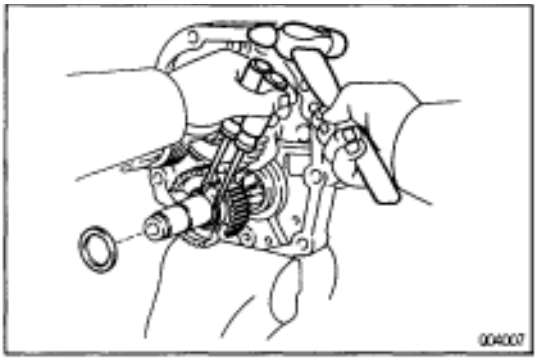

(b) Remove the spacer.

(c) Using 2 screwdrivers and a hammer, tap out the snap ring.
INSTALLATION HINT: Select a snap ring that will allow minimum axial play.

Mark	Thickness mm (in.)
2	2.06–2.11 (0.0811–0.0831)
3	2.12–2.17 (0.0835–0.0854)
4	2.18–2.23 (0.0858–0.0878)
5	2.24–2.29 (0.0882–0.0902)

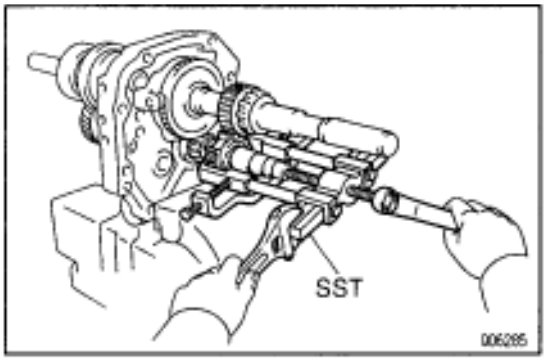

(d) Using SST, remove the No.3 clutch hub.
SST 09950–40010

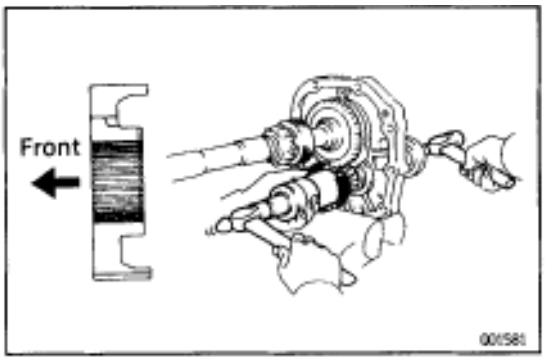

INSTALLATION HINT:
- Using SST and a hammer, drive in the No.3 clutch hub.

SST 09316–60010 (09316–00010, 09316–00070)
- When installing the No.3 clutch hub, support the counter shaft in front with a 3–5 lb hammer or equivalent.

19. REMOVE REAR MAGNET

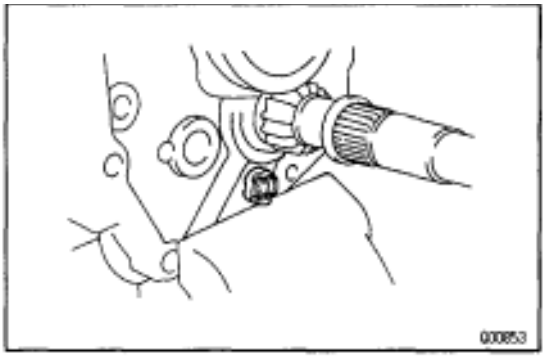

20. REMOVE OUTPUT SHAFT REAR BEARING AND 5TH GEAR

(a) Using 2 screwdrivers and a hammer, tap out the snap ring.
INSTALLATION HINT: Select a snap ring that will allow minimum axial play.

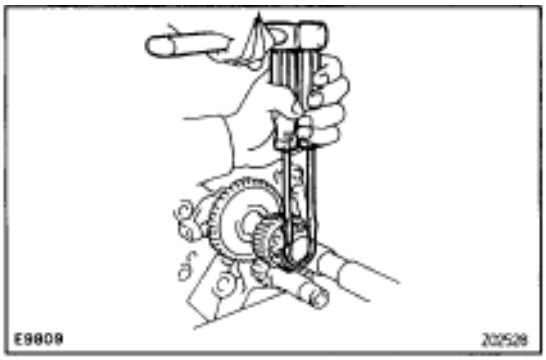

Mark	Thickness mm (in.)
8	2.31–2.36 (0.0909–0.0929)
9	2.37–2.42 (0.0933–0.0953)
10	2.43–2.48 (0.0957–0.0976)
11	2.49–2.54 (0.0980–0.1000)
12	2.55–2.60 (0.1004–0.1024)
13	2.61–2.66 (0.1028–0.1047)
14	2.68–2.73 (0.1055–0.1075)
15	2.74–2.79 (0.1079–0.1098)

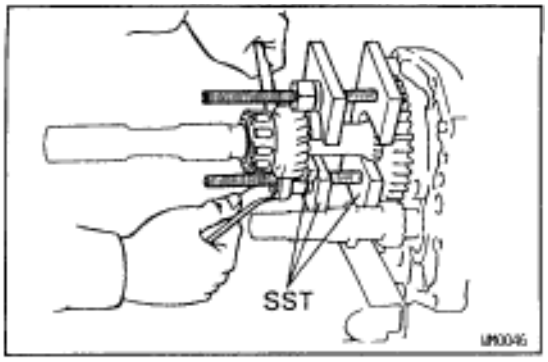

(b) Using SST, remove the rear bearing and 5th gear.
SST 09312–20011 (09313–00030, 09313–00040, 09313–00050)

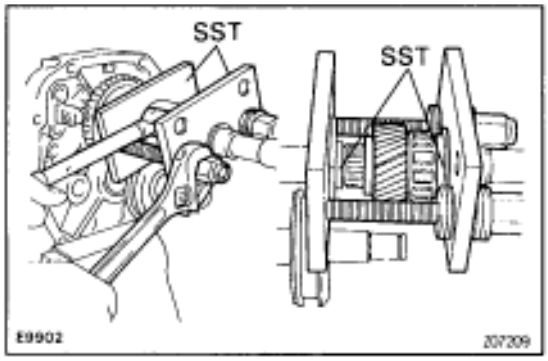

INSTALLATION HINT: Using SST, install the 5th gear and rear bearing.
SST 09312–20011 (09313–00010, 09313–00030, 09313–00040, 09313–00050)

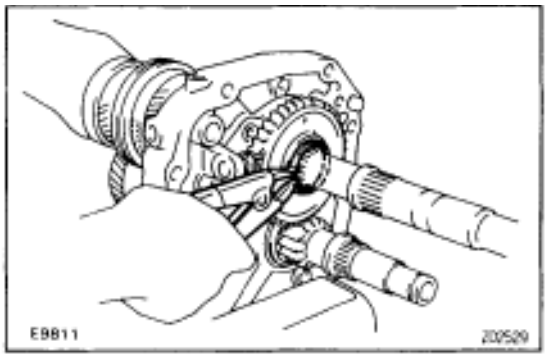

21. REMOVE REVERSE GEAR

(a) Using a snap ring expander, remove the snap ring.
INSTALLATION HINT: Select a snap ring that will allow minimum axial play.

Mark	Thickness mm (in.)
5	2.25–2.30 (0.0886–0.0906)
11	2.30–2.35 (0.0906–0.0925)
12	2.35–2.40 (0.0925–0.0945)
13	2.40–2.45 (0.0945–0.0965)
14	2.45–2.50 (0.0965–0.0984)
15	2.50–2.55 (0.0984–0.1004)
16	2.55–2.60 (0.1004–0.1024)
17	2.61–2.66 (0.1028–0.1047)
18	2.67–2.72 (0.1051–0.1071)
19	2.73–2.78 (0.1075–0.1094)
20	2.79–2.84 (0.1098–0.1118)
21	2.85–2.90 (0.1122–0.1142)
22	2.91–2.96 (0.1146–0.1165)
23	2.97–3.02 (0.1169–0.1189)

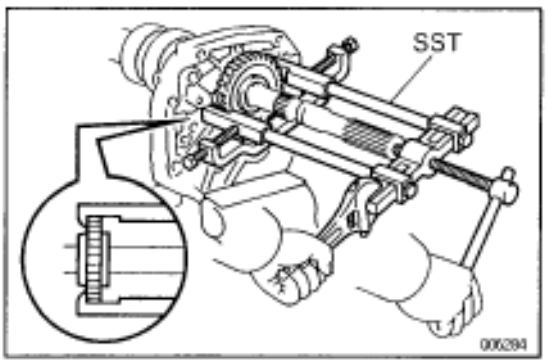

(b) Using SST, remove the reverse gear.
SST 09950–40010

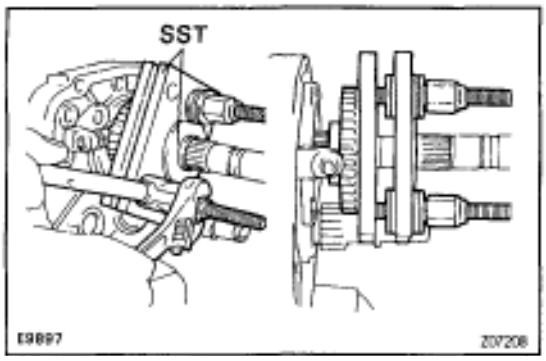

INSTALLATION HINT: Using SST, install the reverse gear.
SST 09312–20011 (09313–00030, 09313–00040, 09313–00050)

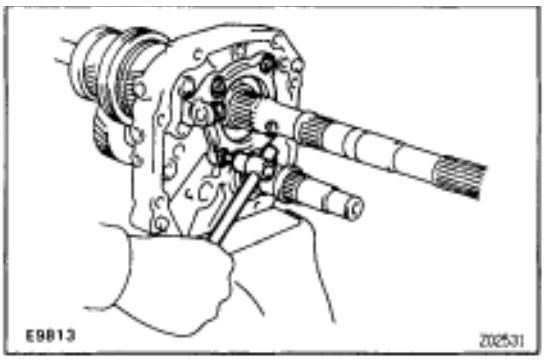

22. REMOVE REAR BEARING RETAINER

(a) Using a torx socket wrench, unscrew the 4 torx screws and remove the retainer.
Torque: 18 N·m (185 kgf·cm, 13 ft·lbf)
(Torx socket wrench T40 09042–00020)

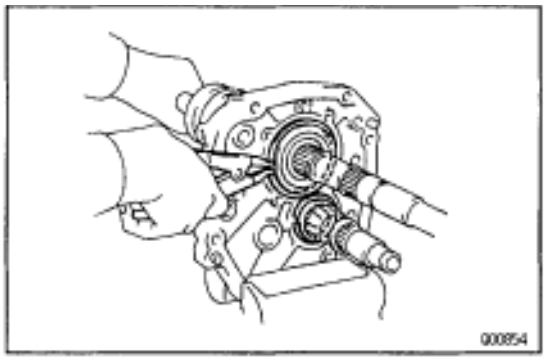

(b) Using a snap ring expander, remove the 2 snap rings.
INSTALLATION HINT: Be sure the snap ring is flush with the intermediate plate surface.

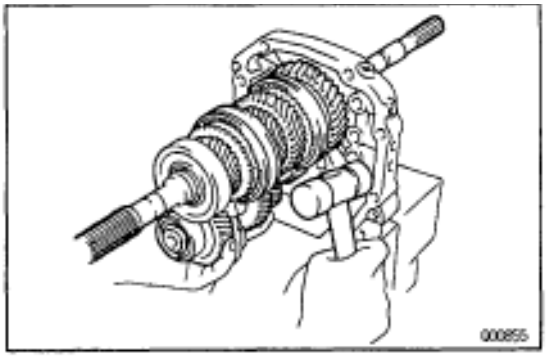

23. REMOVE OUTPUT SHAFT AND COUNTER GEAR FROM INTERMEDIATE PLATE

(a) Remove the output shaft, input shaft and counter gear as a unit from the intermediate plate by pulling on the counter gear and tapping on the intermediate plate with a plastic hammer.
(b) Remove the input shaft from the output shaft.

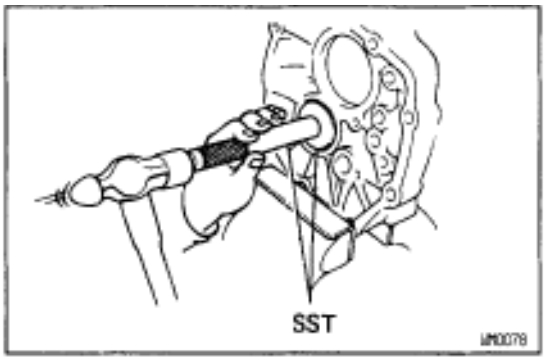

INSTALLATION HINT:
- Before installing the output shaft, use SST to remove the counter gear center bearing outer race.

SST 09608–35014 (09608–06020, 09608–06090)
- Install the outer race after installing the counter gear.

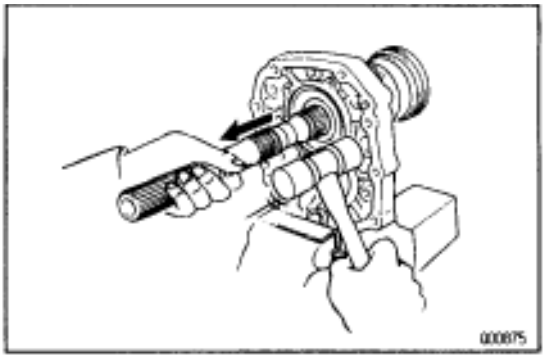

- Install the output shaft into the intermediate plate by pulling on the output shaft and tapping on the intermediate plate.

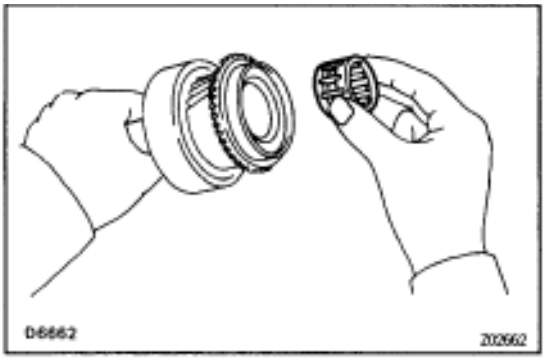

INSTALLATION HINT:
- Apply gear oil to the needle roller bearing.
- Install the needle roller bearing to the input shaft.

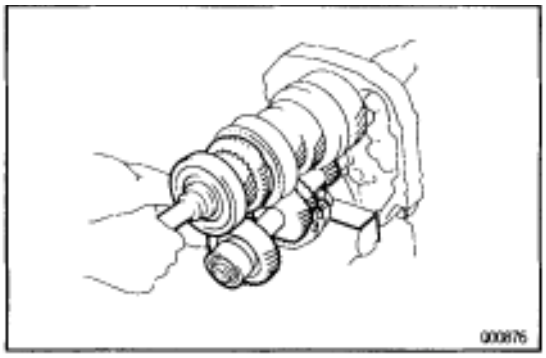

- Install the input shaft and counter gear together.

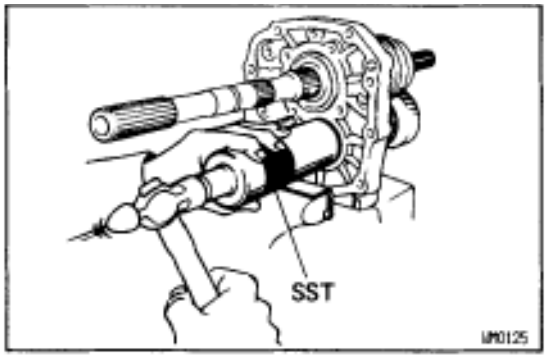

- Using SST and a hammer, install the counter gear center bearing outer race.

SST 09316–60010 (09316–00010)

NOTICE: Be careful not to damage the bearing rollers.

INPUT SHAFT
COMPONENTS

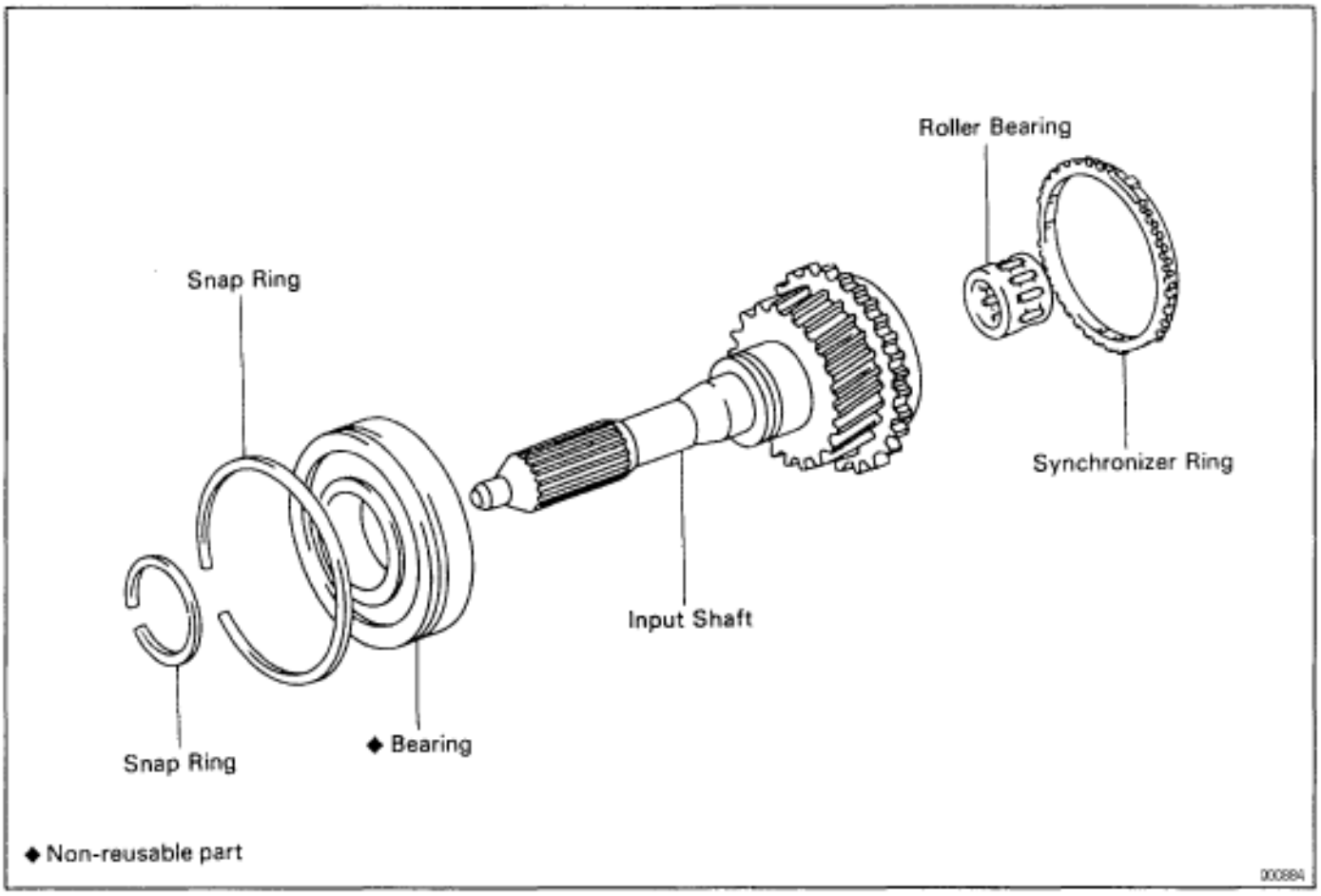

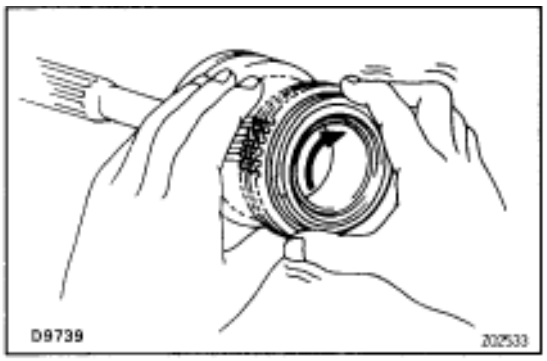

INPUT SHAFT INSPECTION

INSPECT SYNCHRONIZER RING

(a) Check for wear or damage.

(b) Check the braking effect of the synchronizer ring.
Turn the synchronizer ring in one direction while pushing it to the gear cone. Check that the ring locks.
If the braking effect is insufficient, apply a small amount of fine lapping compound between the synchronizer ring and gear cone.
Lightly rub the synchronizer ring and gear cone together.
NOTICE: Ensure the fine lapping compound is completely washed off after rubbing.

(c) Check again the braking effect of the synchronizer ring. If it does not lock, replace the synchronizer ring.

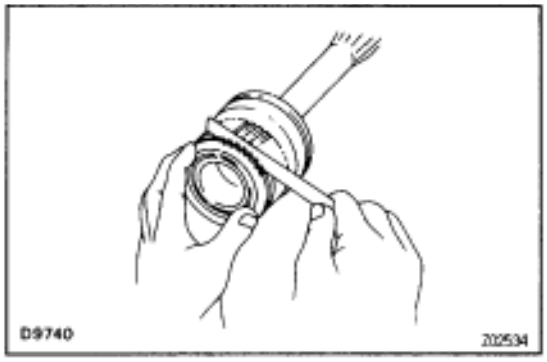

(d) Using a feeler gauge, measure the clearance between the synchronizer ring back and gear spline end.

Minimum clearance:

0.5 mm (0.020 in.)

HINT: When replacing either a synchronizer ring or gear, apply a small amount of fine lapping compound between the synchronizer ring and gear cone.

Lightly rub the synchronizer ring and gear cone together.

NOTICE:

- **When replacing both the synchronizer ring and gear, there is no need to apply any compound or to rub them together.**
- **NOTICE: Ensure the fine lapping compound is completely washed off after rubbing.**

BEARING REPLACEMENT

IF NECESSARY, REPLACE INPUT SHAFT BEARING

(a) Using a snap ring expander, remove the snap ring.

(b) Using a press, remove the bearing.

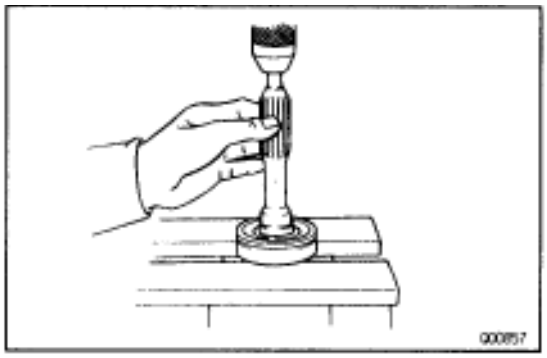

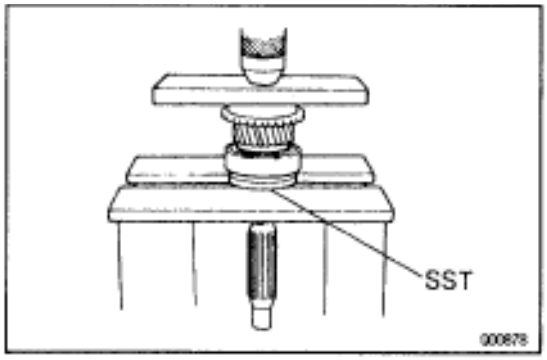

(c) Using SST and a press, install a new bearing.
SST 09506–35010

(d) Select a snap ring that will allow minimum axial play.

Mark	Thickness mm (in.)
1	2.05–2.10 (0.0807–0.0827)
2	2.10–2.15 (0.0827–0.0846)
3	2.15–2.20 (0.0846–0.0866)
4	2.20–2.25 (0.0866–0.0886)
5	2.25–2.30 (0.0886–0.0906)
11	2.30–2.35 (0.0906–0.0925)
12	2.35–2.40 (0.0925–0.0945)

(e) Using a snap ring expander, install the snap ring.

OUTPUT SHAFT
COMPONENTS

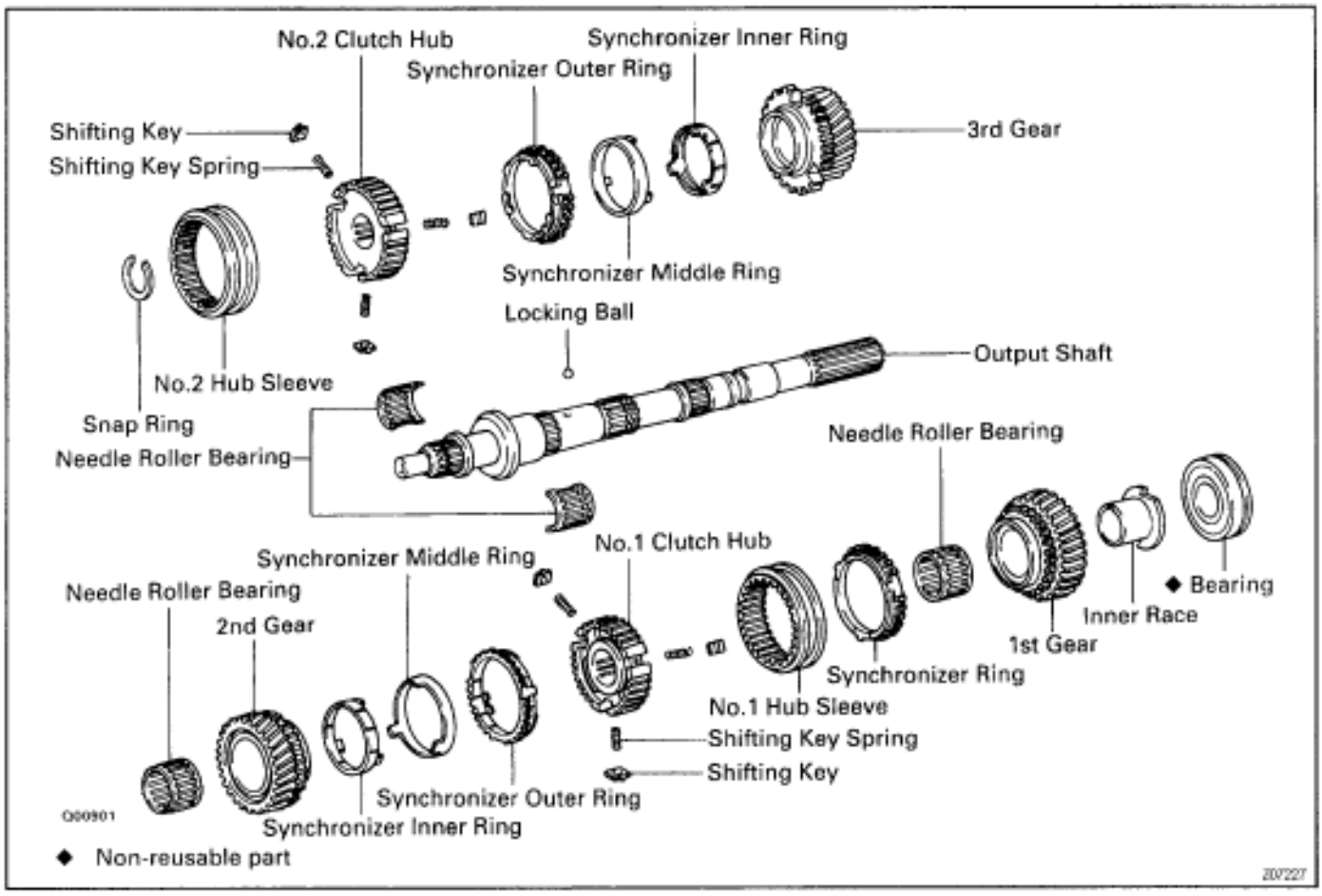

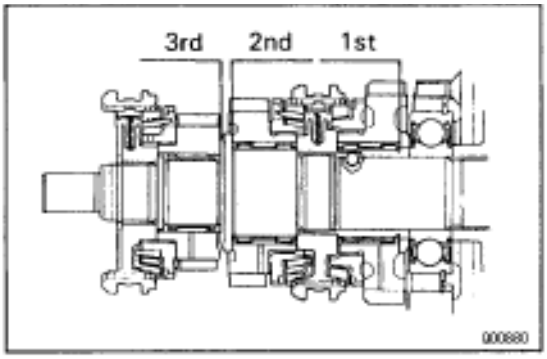

OUTPUT SHAFT DISASSEMBLY

1. INSPECT EACH GEAR THRUST CLEARANCE

Using a feeler gauge, measure the thrust clearance of each gear.

Standard clearance:

0.10–0.25 mm (0.0039–0.0098 in.)

Maximum clearance:

0.30 mm (0.0118 in.)

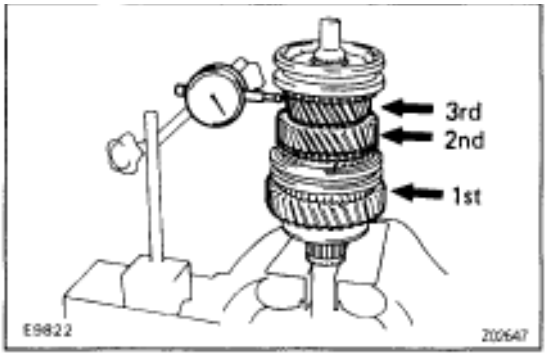

2. INSPECT EACH GEAR RADIAL CLEARANCE

Using a dial indicator, measure the radial clearance of each gear.

Standard clearance:

1st and 2nd gear

0.009–0.060 mm (0.0004–0.0024 in.)

3rd gear

0.015–0.066 mm (0.0006–0.0026 in.)

Maximum clearance:

1st and 2nd gear

0.150 mm (0.0059 in.)

3rd gear

0.200 mm (0.0079 in.)

If the clearance exceeds the maximum, replace the gear, shaft or needle roller bearing.

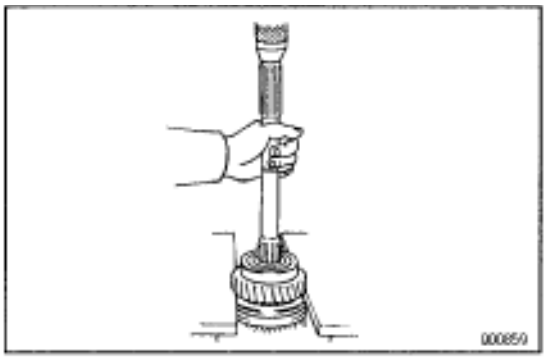

3. REMOVE OUTPUT SHAFT CENTER BEARING AND 1ST GEAR ASSEMBLY

(a) Shift the No.1 hub sleeve onto the 2nd gear.

(b) Using a press, remove the center bearing, 1st gear, needle roller bearing, inner race and synchronizer ring.

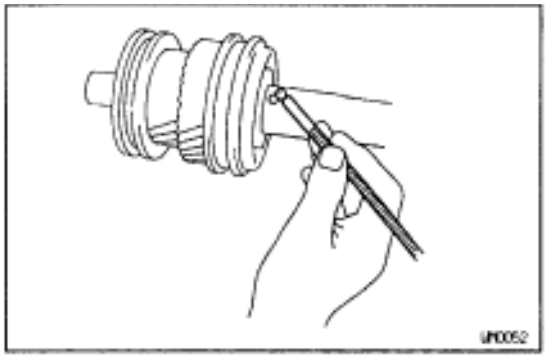

4. REMOVE LOCKING BALL

Using a magnetic finger, remove the locking ball.

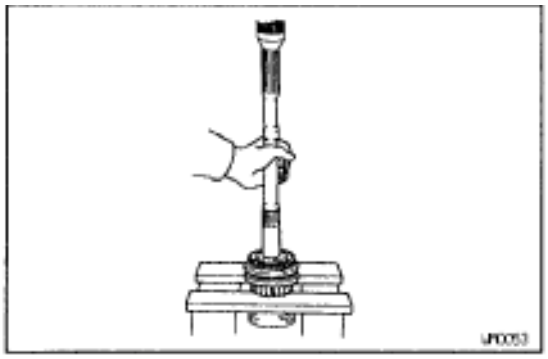

5. REMOVE NO. 1 HUB SLEEVE ASSEMBLY, 2 ND GEAR AND NEEDLE ROLLER BEARING

Using a press, remove the parts from the shaft as an assembly.

6. REMOVE NO.1 HUB SLEEVE, SHIFTING KEYS AND SPRINGS FROM NO. 1 CLUTCH HUB

(a) Remove the No. 1 clutch hub from the No. 1 hub sleeve.

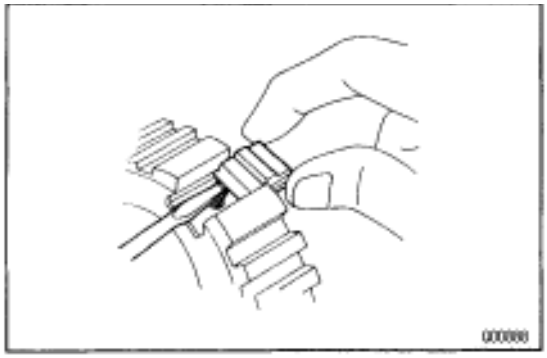

(b) Push the shifting key spring with a screwdriver, remove the 3 shifting keys and key springs.

7. REMOVE NO.2 HUB SLEEVE ASSEMBLY AND 3RD GEAR

(a) Using a snap ring expander, remove the snap ring.

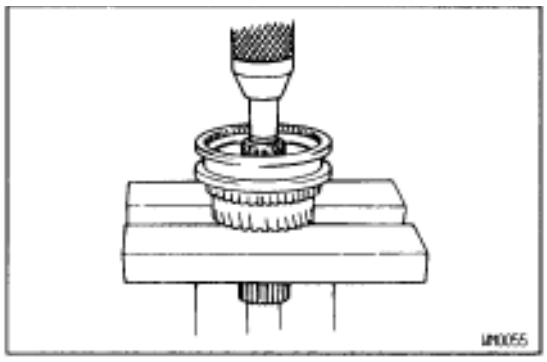

(b) Using a press, remove the No.2 hub sleeve, synchronizer ring and 3rd gear.

8. REMOVE NO.2 HUB SLEEVE, SHIFTING KEYS AND SPRINGS FROM NO.2 CLUTCH HUB

(a) Remove the No. 2 clutch hub from the No. 2 hub sleeve.

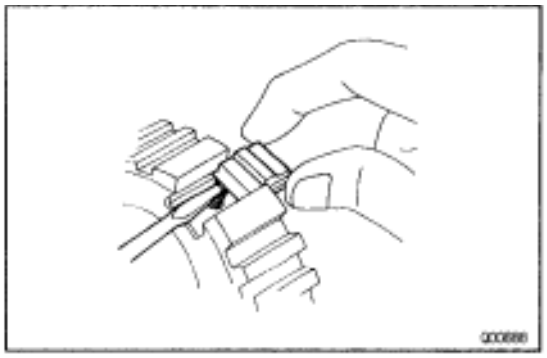

(b) Push the shifting key spring with a screwdriver, remove the 3 shifting keys and key springs.

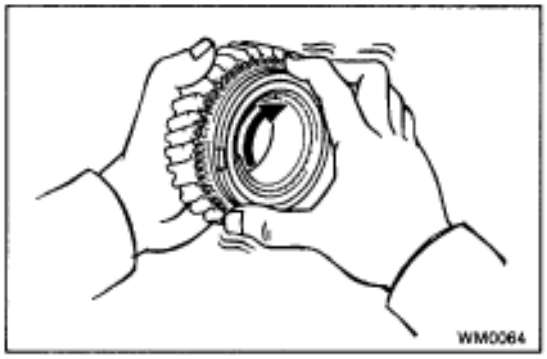

OUTPUT SHAFT COMPONENT PARTS INSPECTION

1. INSPECT 1ST GEAR SYNCHRONIZER RING

(a) Check for wear or damage.

(b) Check the braking effect of the synchronizer ring.
Turn the synchronizer ring in one direction while pushing it to the gear cone. Check that the ring locks.
If the braking effect is insufficient, apply a small amount of fine lapping compound between the synchronizer ring and gear cone.
Lightly rub the synchronizer ring and gear cone together.
NOTICE: Ensure the fine lapping compound is completely washed off after rubbing.

(c) Check again the braking effect of the synchronizer ring. If it does not lock, replace the synchronizer ring.

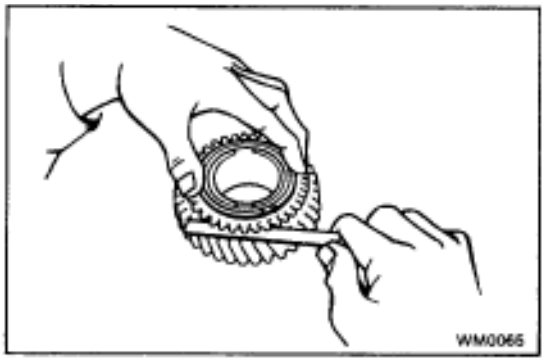

(d) Using a feeler gauge, measure the clearance between the synchronizer ring back and gear spline end.

Minimum clearance:

0.5 mm (0.020 in.)

HINT: When replacing either a synchronizer ring or gear, apply a small amount of fine lapping compound between the synchronizer ring and gear cone.

Lightly rub the synchronizer ring and gear cone together.

NOTICE:

- **When replacing both the synchronizer ring and gear, there is no need to apply any compound or to rub them together.**
- **Ensure the fine lapping compound is completely washed off after rubbing.**

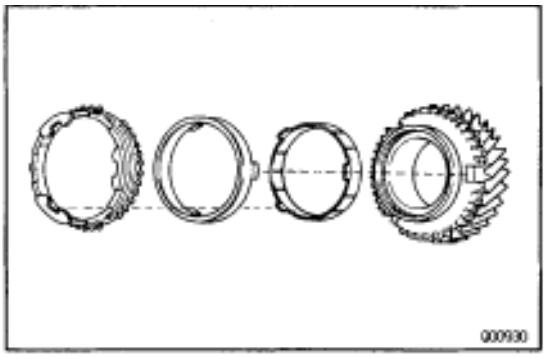

2. INSPECT 2 ND AND 3 RD GEAR SYNCHRONIZER RINGS

(a) Check for wear or damage.

(b) Install the synchronizer inner ring, middle ring and outer ring to each gear.

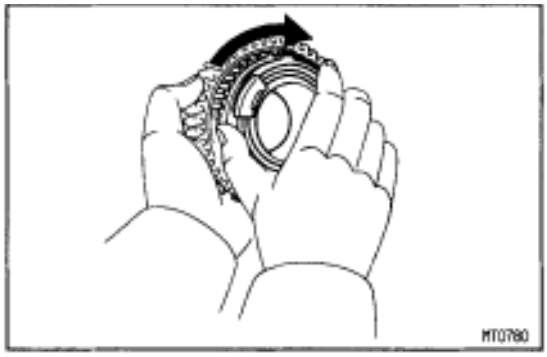

(c) Check the braking effect of the synchronizer ring.

Turn the synchronizer ring in one direction while pushing it to the gear cone. Check that the ring locks.

If it does not lock, replace the synchronizer ring.

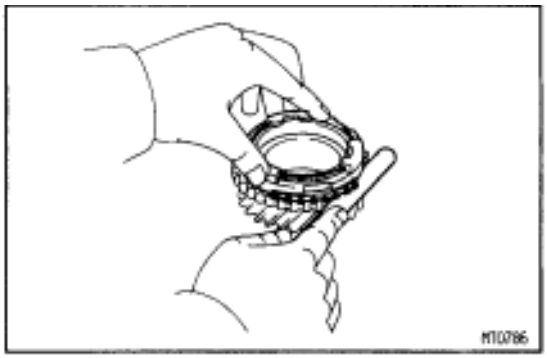

(d) Using a feeler gauge, measure the clearance between the synchronizer ring back and the gear spline end.

Minimum clearance:

0.7 mm (0.028 in.)

If the clearance is less than the minimum, replace the synchronizer ring.

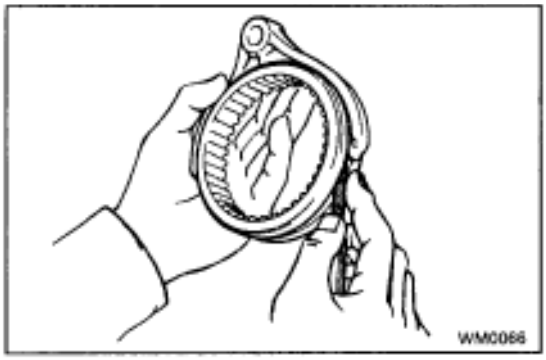

3. INSPECT CLEARANCE OF SHIFT FORKS AND HUB SLEEVES

Using a feeler gauge, measure the clearance between the hub sleeve and shift fork.

Maximum clearance:

1.0 mm (0.039 in.)

If the clearance exceeds the maximum, replace the shift fork or hub sleeve.

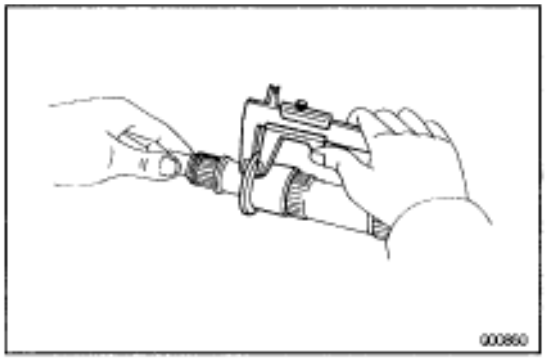

4. INSPECT OUTPUT SHAFT AND INNER RACE

(a) Using vernier calipers, measure the output shaft flange thickness.

Minimum thickness:

5.60 mm (0.2205 in.)

If the thickness is less than the minimum, replace the output shaft.

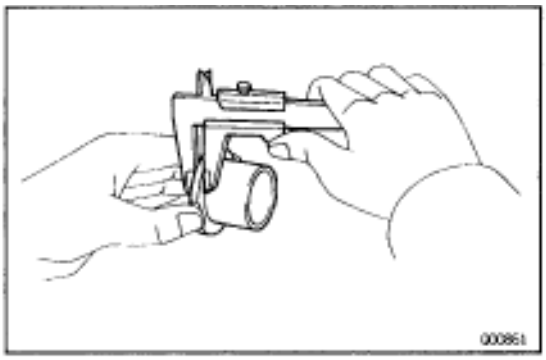

(b) Using vernier calipers, measure the inner race flange thickness.

Minimum thickness:

4.78 mm (0.1882 in.)

If the thickness is less than the minimum, replace the inner race.

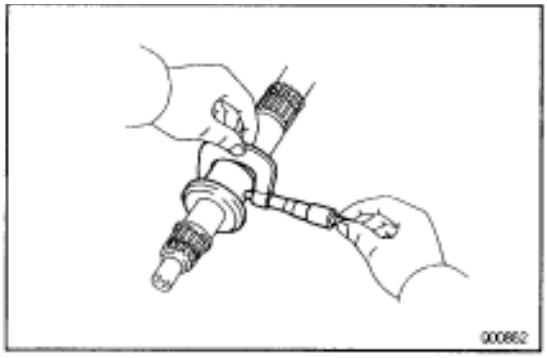

(c) Using a micrometer, measure the outer diameter of the output shaft journal.

Minimum diameter:

2nd gear

42.975 mm (1.6919 in.)

3rd gear

31.969 mm (1.2586 in.)

If the outer diameter is less than the minimum, replace the output shaft.

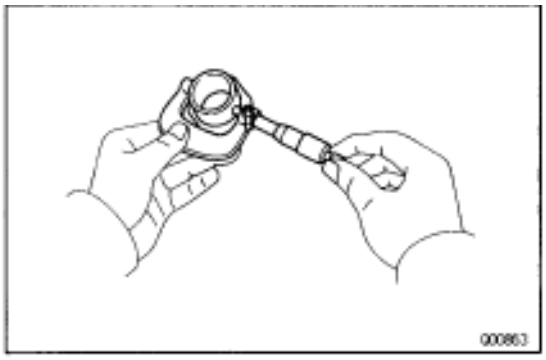

(d) Using a micrometer, measure the outer diameter of the inner race.

Minimum diameter:

42.975 mm (1.6919 in.)

If the outer diameter is less than the minimum, replace the inner race.

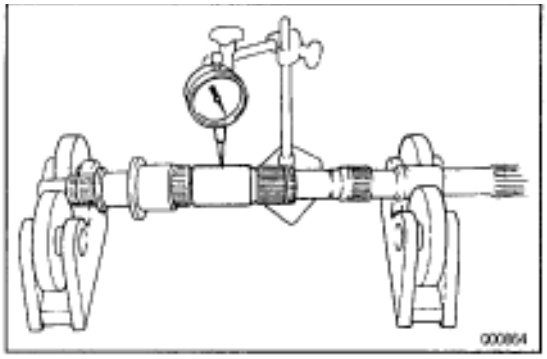

(e) Using a dial indicator, check the shaft runout.
Maximum runout:
0.06 mm (0.0024 in.)
If the runout exceeds the maximum, replace the output shaft.

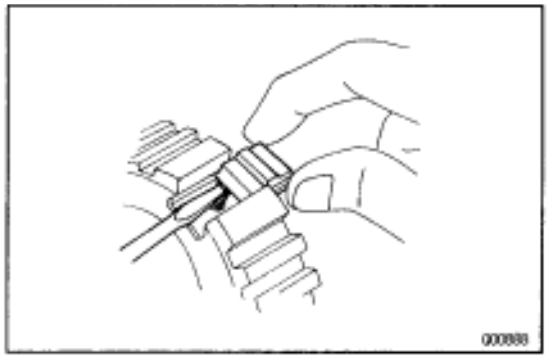

OUTPUT SHAFT ASSEMBLY

HINT: Coat all of the sliding and rotating surface with gear oil before assembly.

1. INSTALL NO.1 AND NO.2 CLUTCH HUB INTO HUB SLEEVE

(a) Install the 3 shifting key springs to the clutch hub.
(b) While pushing the shifting key spring with a screw–driver, install the 3 shifting keys.

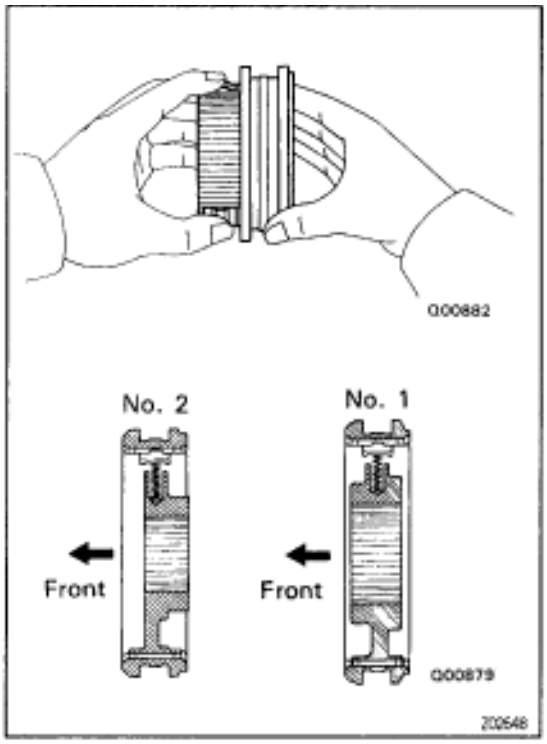

(c) While pushing the 3 shifting keys, install the clutch hub to the hub sleeve, as shown.

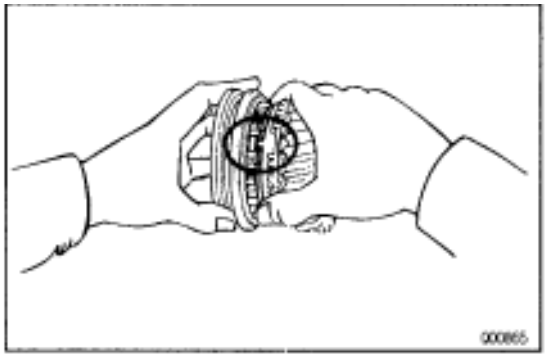

2. INSTALL 3RD GEAR AND NO.2 CLUTCH HUB ON OUTPUT SHAFT

(a) Apply gear oil to the shaft.
(b) Place the synchronizer ring on the gear and align the ring slots with the shifting keys.

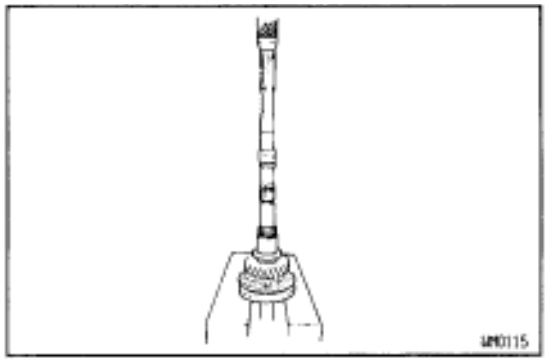

(c) Using a press, install the 3rd gear and No.2 clutch hub.

3. INSTALL SNAP RING

(a) Select a snap ring that will allow minimum axial play.

Mark	Thickness mm (in.)
C–1	1.75–1.80 (0.0689–0.0709)
D	1.80–1.85 (0.0709–0.0728)
11	1.86–1.91 (0.0732–0.0752)
12	1.92–1.97 (0.0756–0.0776)
13	1.98–2.03 (0.0780–0.0799)
14	2.04–2.09 (0.0803–0.0823)
15	2.10–2.15 (0.0827–0.0846)

(b) Using a snap ring expander, install the snap ring.

4. INSPECT 3RD GEAR THRUST CLEARANCE

Using a feeler gauge, measure the 3rd gear thrust clearance.

Standard clearance:

0.10–0.25 mm (0.0039–0.0098 in.)

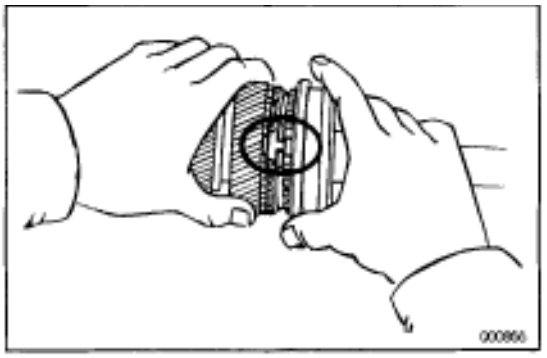

5. INSTALL 2ND GEAR AND NO.1 CLUTCH HUB

(a) Apply gear oil to the shaft and needle roller bearing.

(b) Place the synchronizer ring on the gear and align the ring slots with the shifting keys.

(c) Install the needle roller bearing in the 2nd gear.

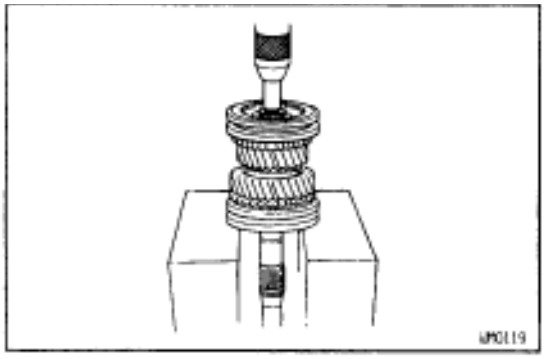

(d) Using a press, install the 2nd gear and No.1 clutch hub.

6. INSPECT 2ND GEAR THRUST CLEARANCE

Using a feeler gauge, measure the 2nd gear thrust clearance.

Standard clearance:

0.10–0.25 mm (0.0039–0.0098 in.)

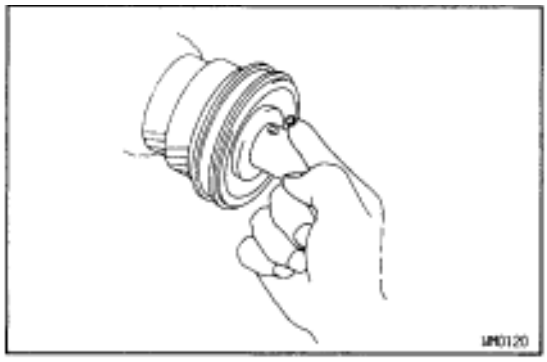

7. INSTALL LOCKING BALL AND 1ST GEAR ASSEMBLY

(a) Install the locking ball in the shaft.

(b) Apply gear oil to the bearing.

(c) Assemble the 1st gear, synchronizer ring, needle roller bearing and bearing inner race.

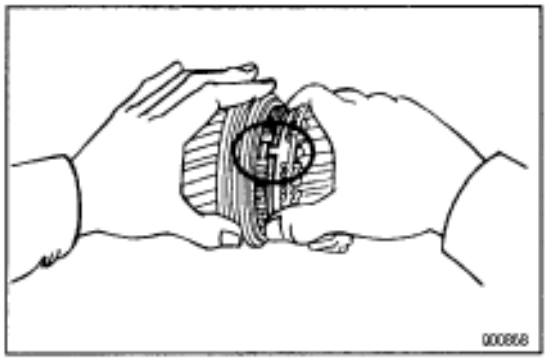

(d) Install the assembly on the output shaft with the synchronizer ring slots aligned with the shifting keys and turn the inner race to align it with the locking ball.

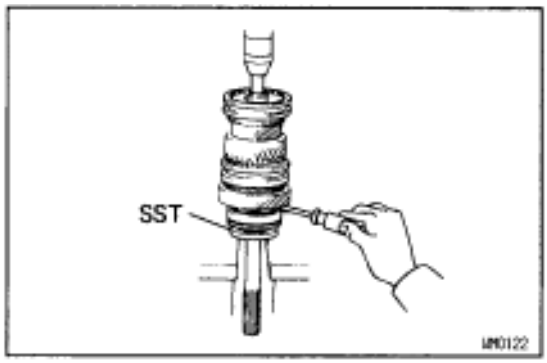

8. INSTALL OUTPUT SHAFT CENTER BEARING

Using SST and a press, install the bearing on the output shaft with the outer race snap ring groove toward the rear.

HINT: Hold the 1st gear inner race to prevent it from falling.

SST 09506–35010

9. INSPECT 1ST GEAR THRUST CLEARANCE

Using a feeler gauge, measure the 1st gear thrust clearance.

Standard clearance:

0.10–0.25 mm (0.0039–0.0098 in.)

COUNTER GEAR AND REVERSE IDLER GEAR

COMPONENTS

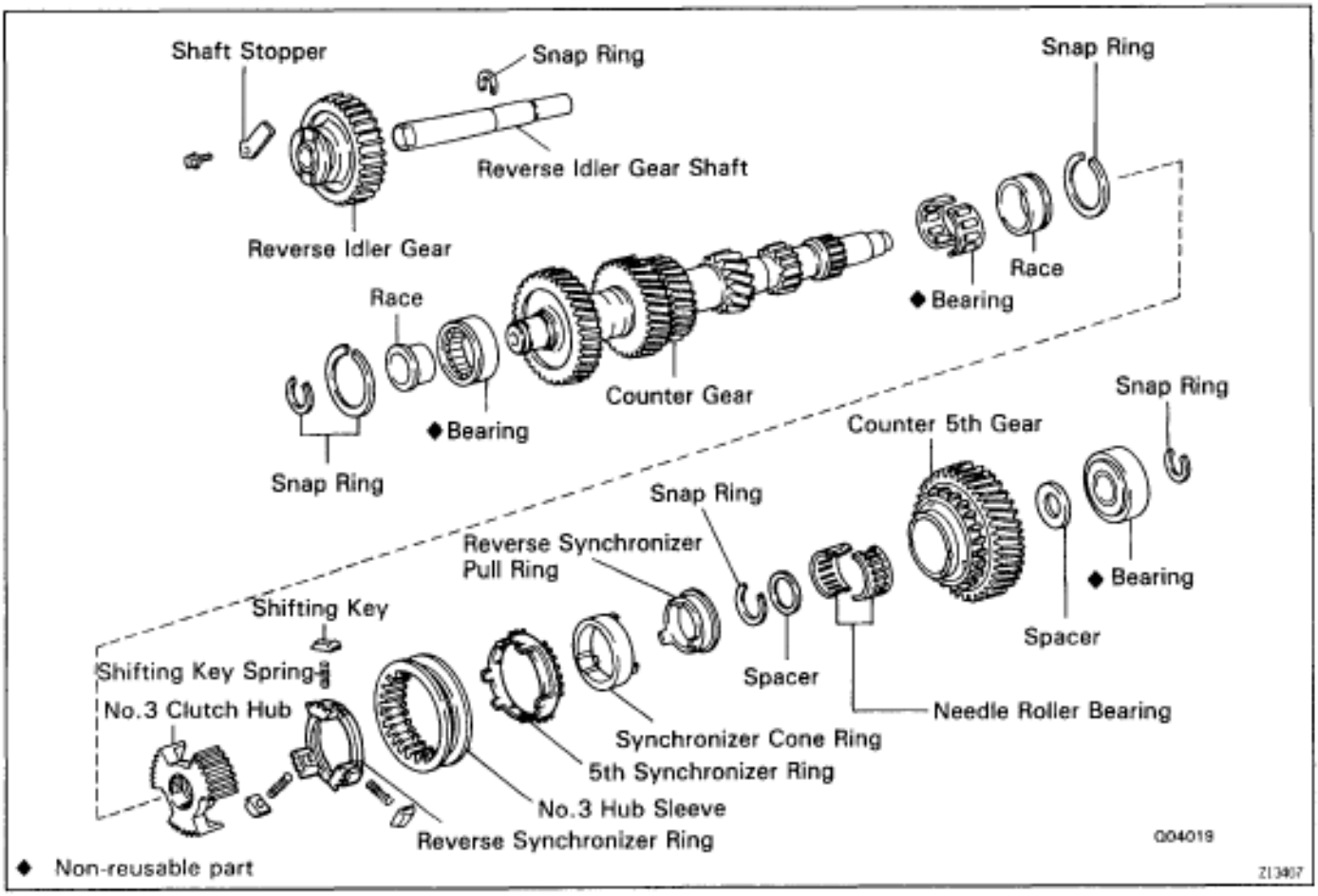

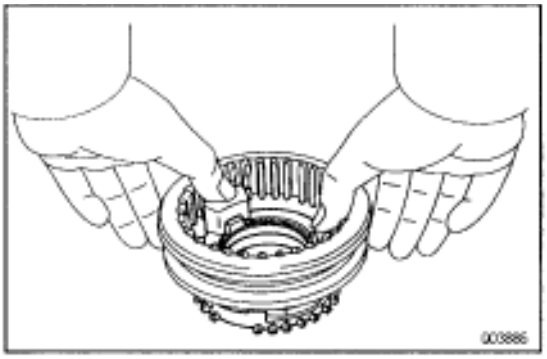

COUNTER GEAR COMPONENT PARTS DISASSEMBLY

REMOVE NO.3 HUB SLEEVE, SHIFTING KEYS AND SPRINGS FROM SYNCHRONIZER RING

(a) Remove the synchronizer ring assembly from the No.3 hub sleeve.

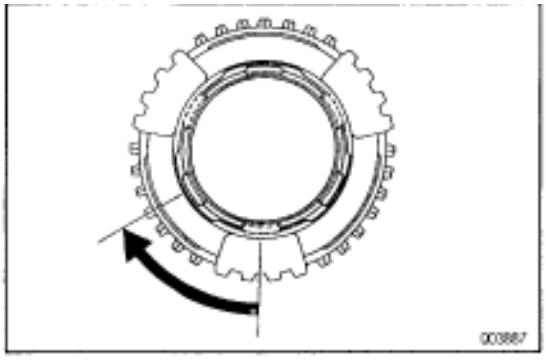

(b) Turn the reverse synchronizer pull ring.

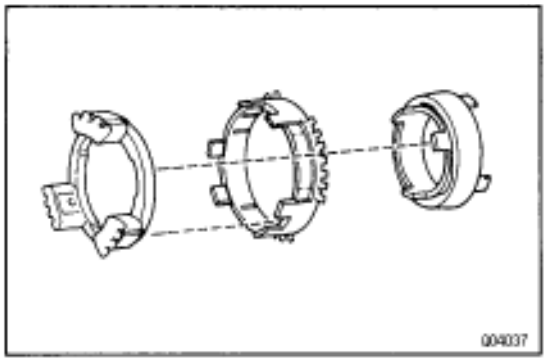

(c) Remove the reverse synchronizer ring and 5th synchronizer ring from the synchronizer pull ring and cone ring.

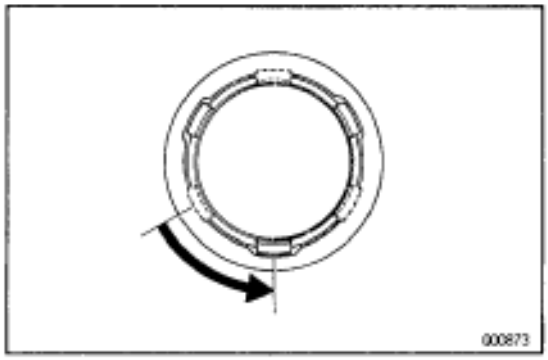

(d) Turn the reverse synchronizer pull ring, separate the pull ring and cone ring.

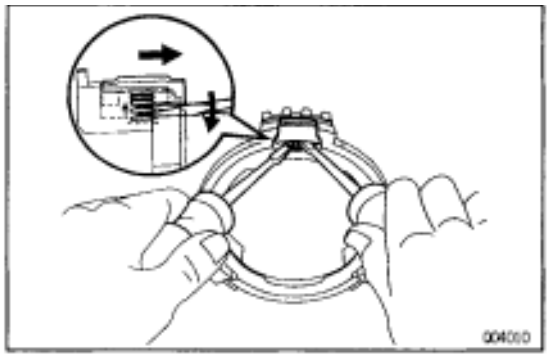

(e) While pushing the shifting key spring to out slide with 2 screwdrivers, remove the 3 shifting keys and key springs, from the reverse synchronizer ring.

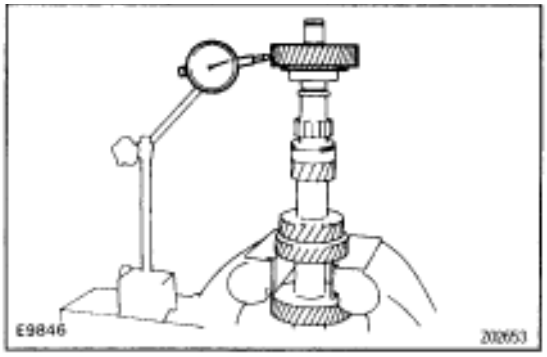

COUNTER GEAR AND REVERSE IDLER GEAR COMPONENT PARTS INSPECTION

1. INSPECT COUNTER 5 TH GEAR RADIAL CLEARANCE

(a) Install the spacer, counter 5th gear and needle roller bearing to the counter gear.

(b) Using a dial indicator, measure the counter 5th gear radial clearance.

Standard clearance:

0.009–0.060 mm (0.0004–0.0024 in.)

Maximum clearance:

0.150 mm (0.0059 in.)

If the clearance exceeds the maximum, replace the counter gear or needle roller bearing or counter 5th gear.

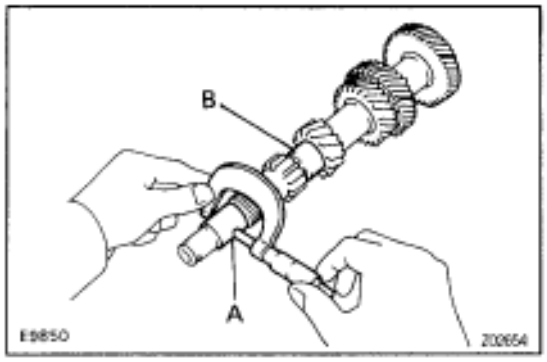

2. INSPECT COUNTER GEAR

Using a micrometer, measure the outer diameter of the counter shaft journal.

Minimum diameter:

Part A

26.975 mm (1.0620 in.)

Part B

29.950 mm (1.1791 in.)

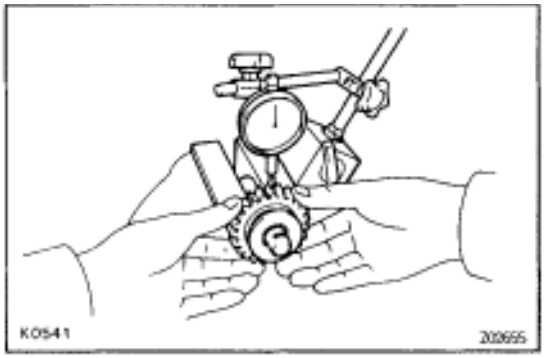

3. INSPECT REVERSE IDLER GEAR RADIAL CLEARANCE

Using a dial indicator, measure the reverse idler gear radial clearance.

Standard clearance:

0.041–0.074 mm (0.0016–0.0029 in.)

Maximum clearance:

0.194 mm (0.0076 in.)

If the clearance exceeds the maximum, replace the gear or shaft.

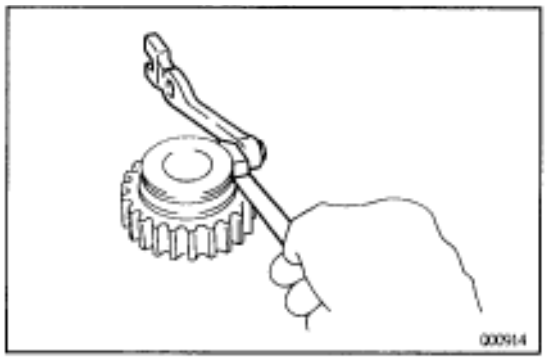

4. INSPECT CLEARANCE OF REVERSE IDLER GEAR AND SHIFT ARM SHOE

Using a feeler gauge, measure the clearance between the reverse idler gear and shift arm shoe.

Standard clearance:

0.20–0.41 mm (0.008–0.0161 in.)

Maximum clearance:

0.9 mm (0.0354 in.)

If the clearance exceeds the maximum, replace the shift arm shoe or reverse idler gear.

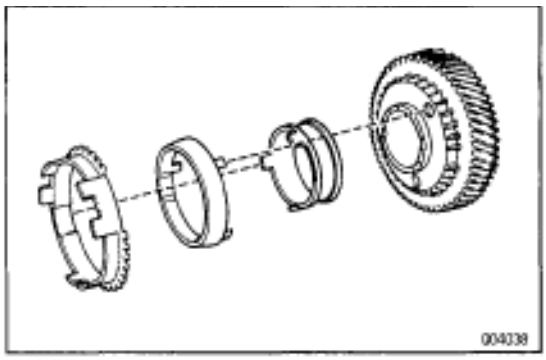

5. INSPECT 5TH GEAR SYNCHRONIZER RING

(a) Check for wear or damage.

(b) Install the synchronizer pull ring, cone ring and outer ring to the 5th gear.

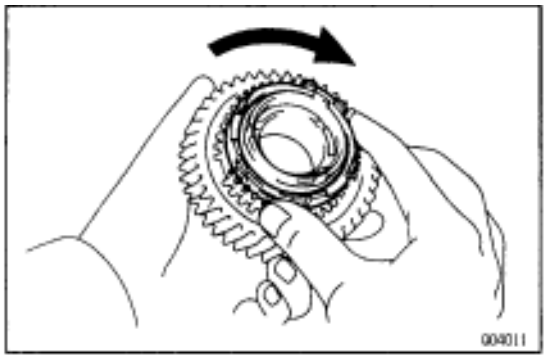

(c) Check the braking effect of the synchronizer ring.
Turn the synchronizer ring in one direction while pushing it to the gear cone. Check that the ring locks.
If it does not lock, replace the synchronizer ring.

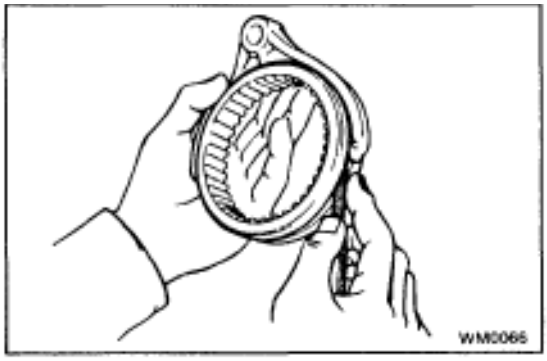

6. INSPECT CLEARANCE OF SHIFT FORKS AND HUB SLEEVES

Using a feeler gauge, measure the clearance between the hub sleeve and shift fork.

Maximum clearance:

1.0 mm (0.039 in.)

If the clearance exceeds the maximum, replace the shift fork or hub sleeve.

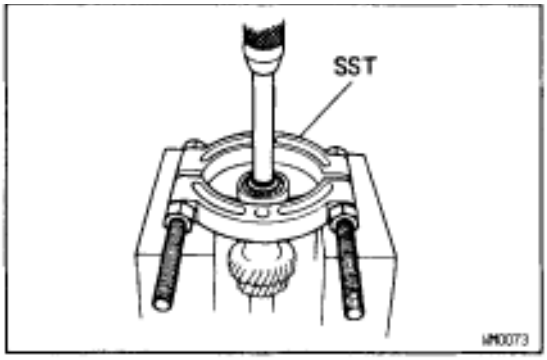

BEARING REPLACEMENT

1. IF NECESSARY, REPLACE COUNTER GEAR FRONT BEARING AND SIDE RACE

(a) Using a snap ring expander, remove the snap ring.

(b) Using SST and a press, press out the bearing.
SST 09950–00020

(c) Check the side race for wear or damage.

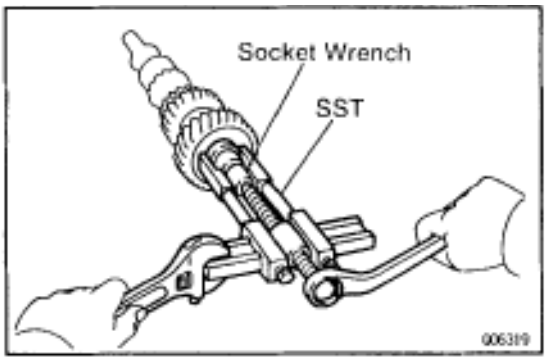

(d) If necessary, remove the side race.

- Using SST and a socket wrench, remove the side race.

SST 09950–40010

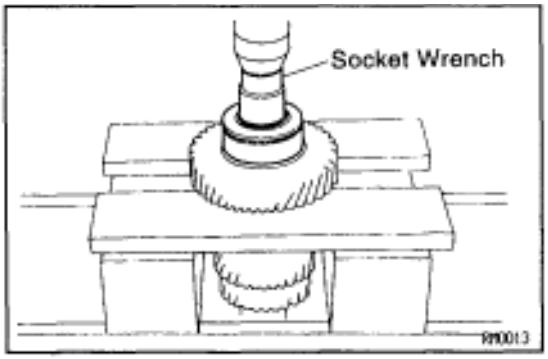

(e) Using a socket wrench, press in a new bearing, side race and inner race.

(f) Select a snap ring that will allow minimum axial play.

Mark	Thickness mm (in.)
A	2.05–2.10 (0.0807–0.0827)
B	2.10–2.15 (0.0827–0.0846)
C	2.15–2.20 (0.0846–0.0866)
D	2.20–2.25 (0.0866–0.0886)
E	2.25–2.30 (0.0886–0.0906)
F	2.30–2.35 (0.0906–0.0925)

(g) Using a snap ring expander, install the snap ring.

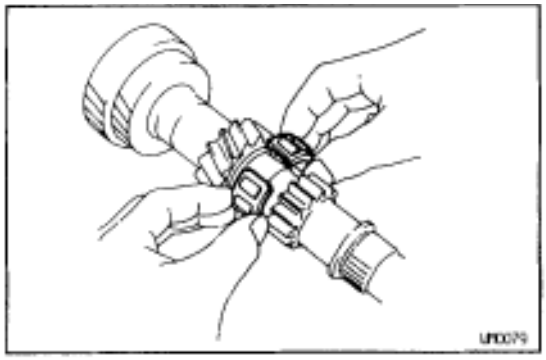

2. IF NECESSARY, REPLACE COUNTER GEAR CENTER BEARING

(a) Remove the bearing from the counter gear.

(b) Install a new bearing on the counter gear.
HINT: Engage the roller cages.

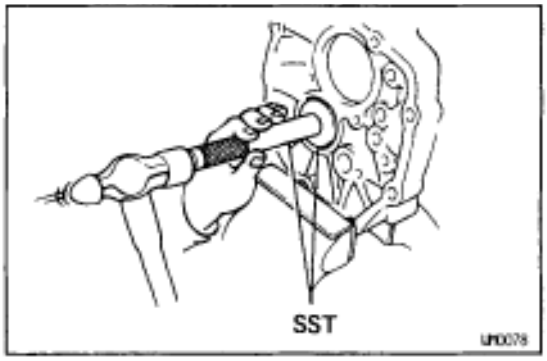

(c) Using SST, tap out the bearing outer race.
SST 09608–35014 (09608–06020, 09608–06090)
HINT: The outer race will be installed later, as the transmission is assembled.

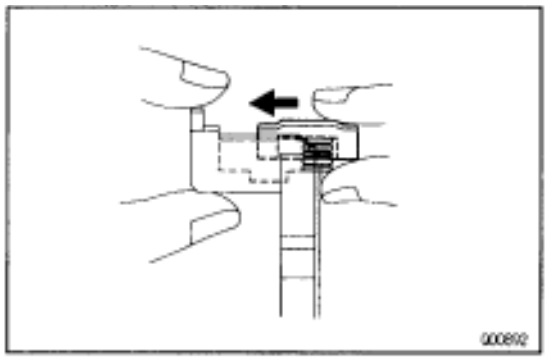

COUNTER GEAR ASSEMBLY

INSTALL SYNCHRONIZER RING ASSEMBLY TO NO.3 HUB SLEEVE

(a) Push the synchronizer key spring, install the shifting key and key spring to the reverse synchronizer ring.

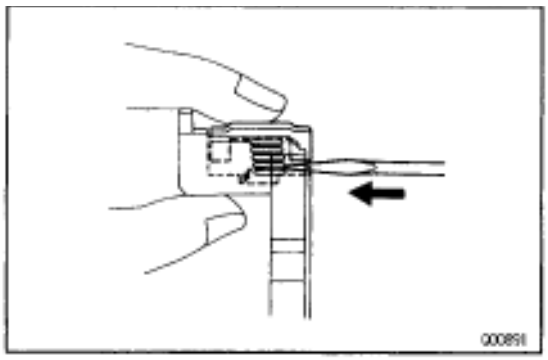

(b) Using a screwdriver, push the 3 key springs into the synchronizer ring spring gaps.

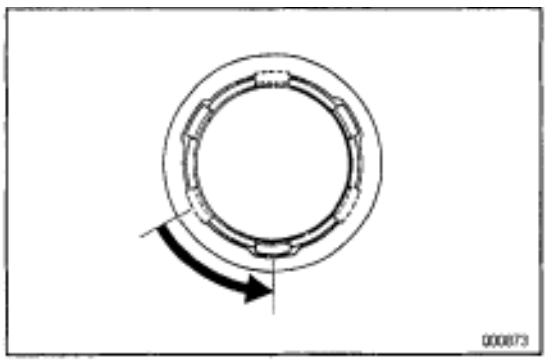

(c) Install the synchronizer cone ring to the reverse synchronizer pull ring and turn the pull ring.

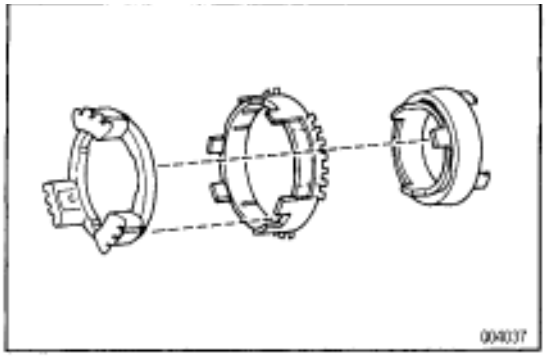

(d) Install the 5th synchronizer ring.
(e) Install the reverse synchronizer ring.

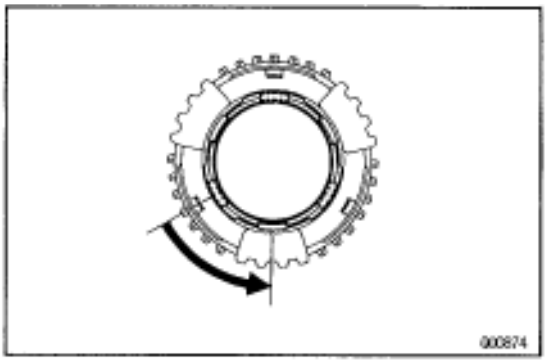

(f) Turn the reverse synchronizer pull ring.

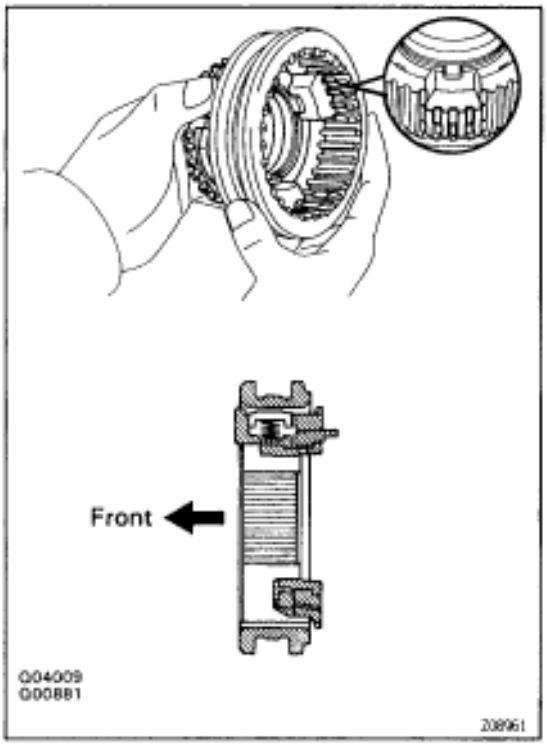

(g) While pushing 3 shifting keys, install the synchronizer ring assembly to the No.3 hub sleeve.

FRONT BEARING RETAINER

COMPONENTS

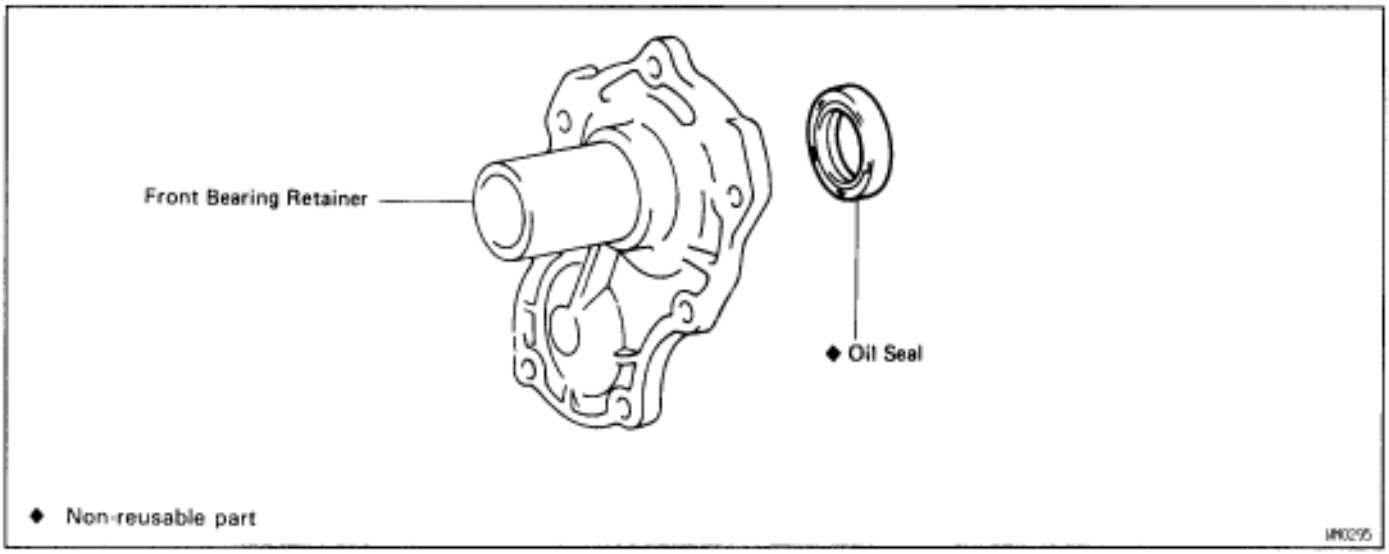

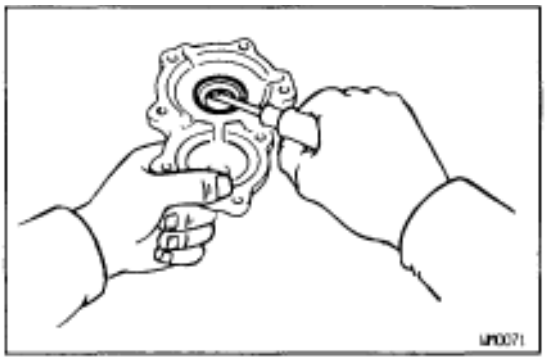

OIL SEAL REPLACEMENT

IF NECESSARY, REPLACE FRONT BEARING RETAINER OIL SEAL

(a) Using a screwdriver, pry out the oil seal.

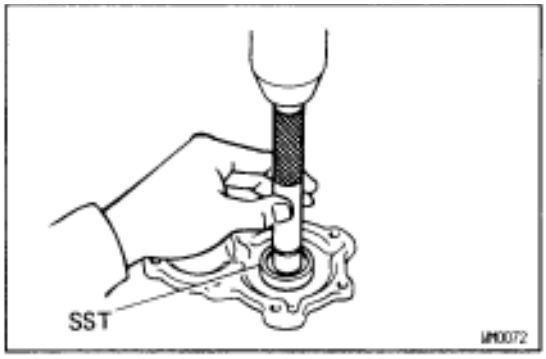

(b) Using SST and a press, install a new oil seal.
SST 09608–20012 (09608–03020, 09608–00080)
Drive in depth:
11.4–12.0 mm (0.449–0.472 in.) from retainer end

EXTENSION HOUSING
COMPONENTS

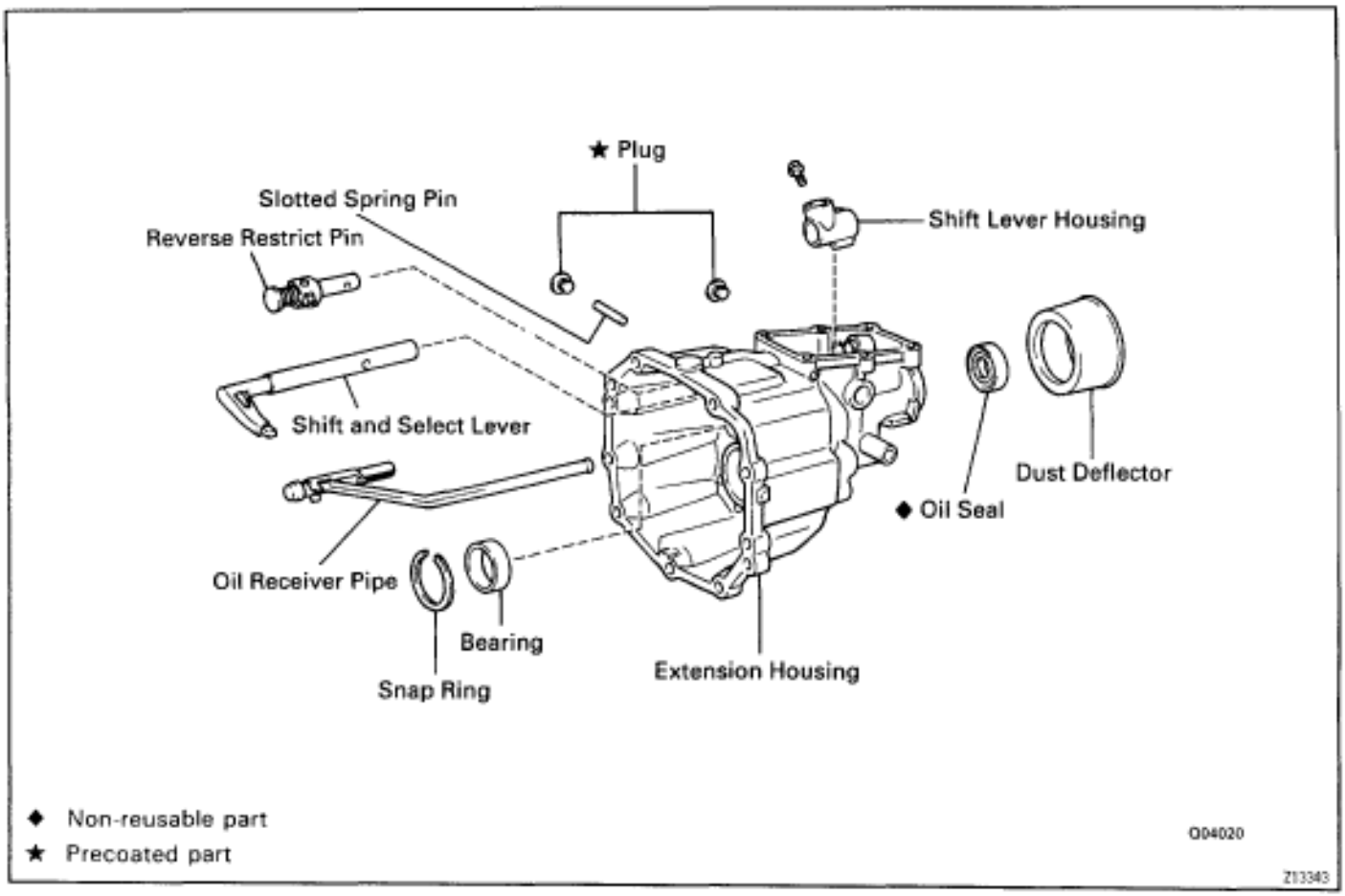

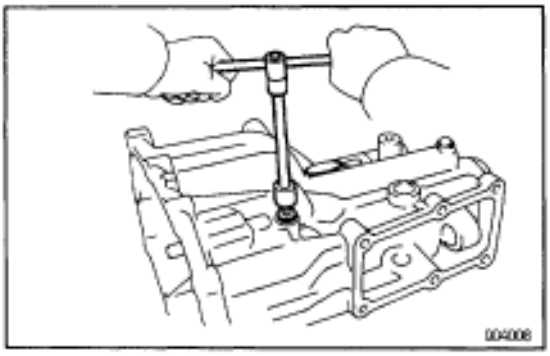

REVERSE RESTRICT PIN REPLACEMENT

1. REMOVE REVERSE RESTRICT PIN

(a) Using a hexagon wrench, remove the screw plug.

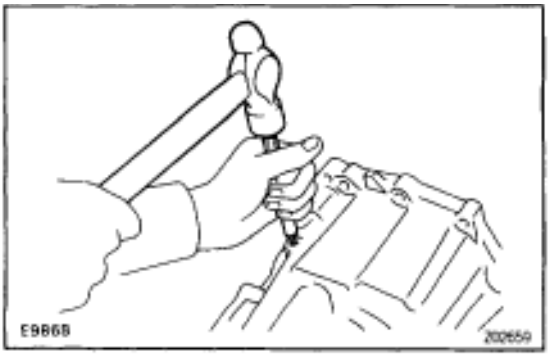

(b) Using a pin punch and hammer, drive out the slotted spring pin.

(c) Pull off the lever housing and slide out the shaft.

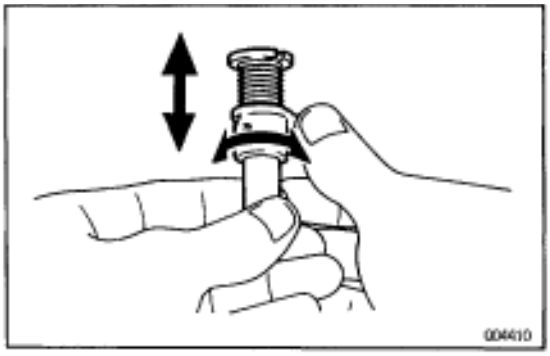

2. INSPECT REVERSE RESTRICT PIN

Turn and push the reverse restrict pin by hand. Check for smooth operation.

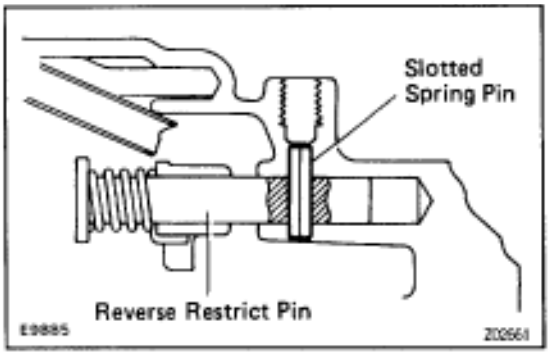

3. INSTALL REVERSE RESTRICT PIN

(a) Install the lever housing.

(b) Using a pin punch and hammer, drive in the slotted spring pin, as shown.

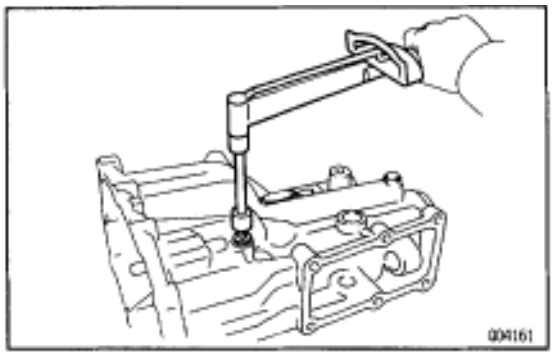

(c) Apply sealant to the plug.

Sealant:

Part No. 08833–00080, THREE BOND 1344, LOCTITE 242 or equivalent

(d) Install and torque the screw plug.

Torque: 25 N·m (250 kgf·cm, 18 ft·lbf)

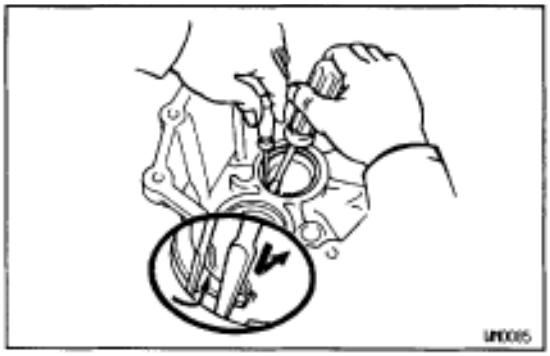

BEARING REPLACEMENT

IF NECESSARY, REPLACE REAR BEARING OUT REAR RACE

(a) Using 2 screwdrivers, remove the snap ring.

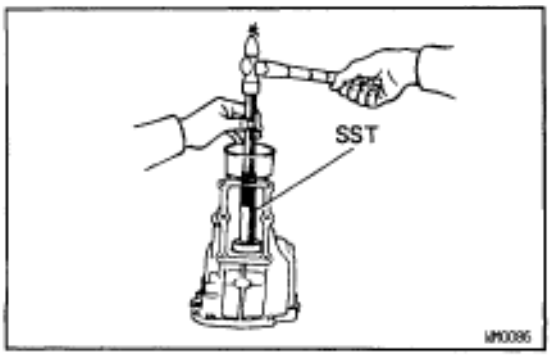

(b) Using SST and a hammer, tap out the outer race. SST 09608–12010 (09608–00020, 09608–00050)

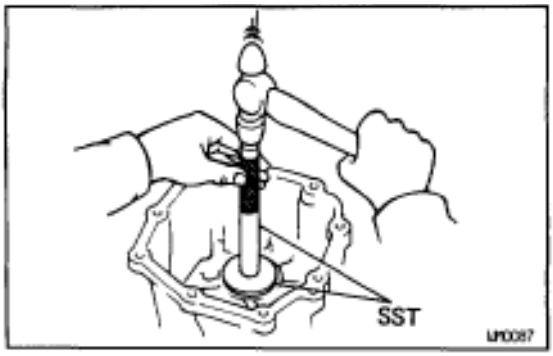

(c) Using SST, install a new outer race. SST 09608–35014 (09608–06020, 09608–06100)

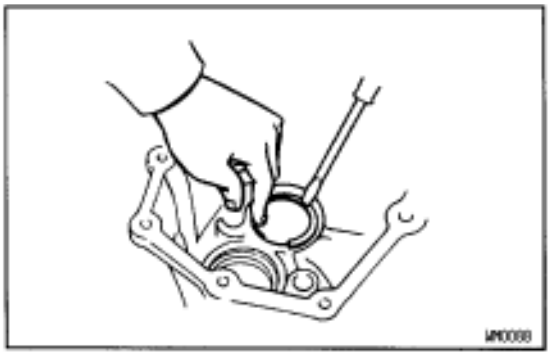

(d) Using a screwdriver, install the snap ring.

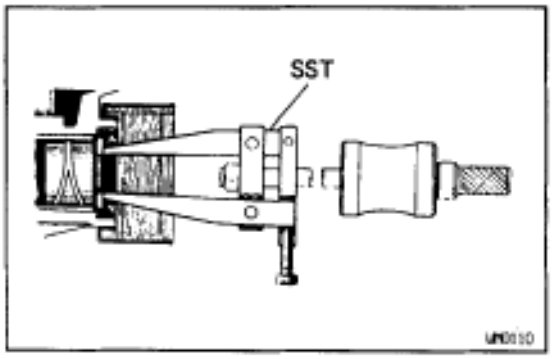

OIL SEAL REPLACEMENT

IF NECESSARY, REPLACE OIL SEAL

(a) Using SST, remove the oil seal.
SST 09308–00010 or 09308–10010 w/ output shaft installed

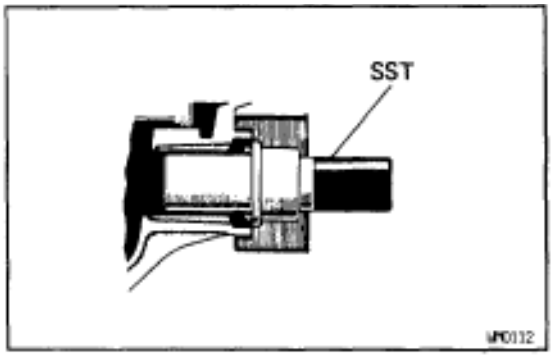

(b) Using SST and a hammer, drive in a new oil seal. SST 09325–20010

CONTROL SHIFT LEVER RETAINER

COMPONENTS

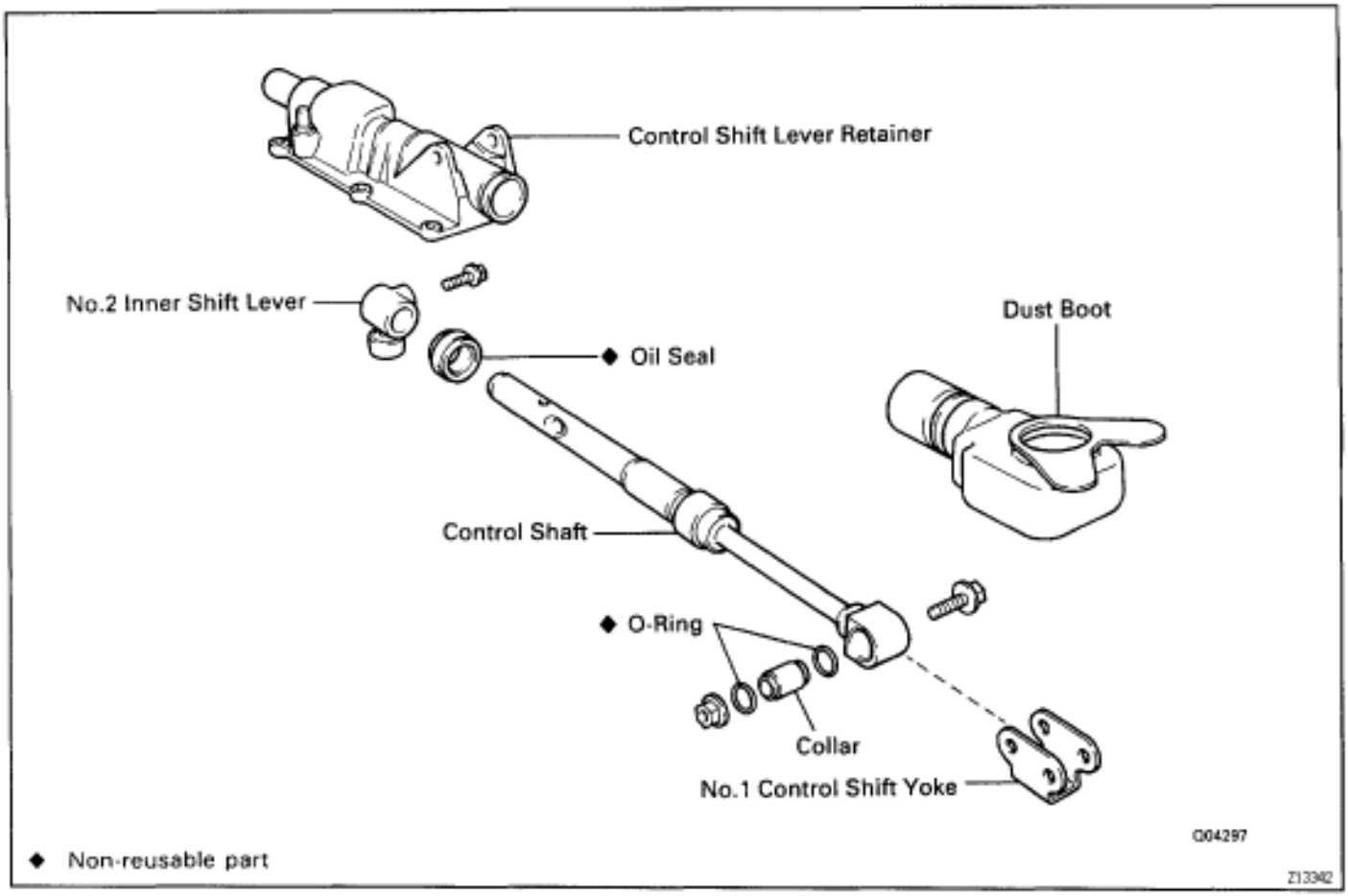

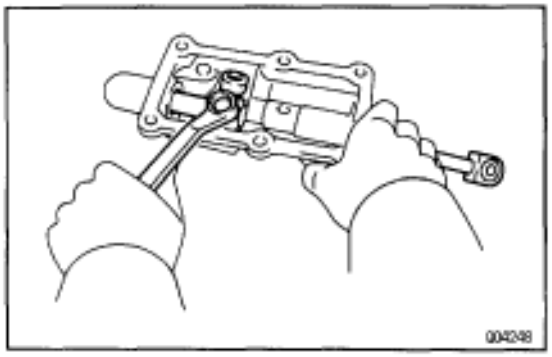

OIL SEAL REPLACEMENT

IF NECESSARY, REPLACE CONTROL SHIFT LEVER RETAINER OIL SEAL

(a) Remove the No. 2 inner shift lever set bolt.

(b) Remove the No. 2 inner shift lever and control shaft from the control shift lever retainer.

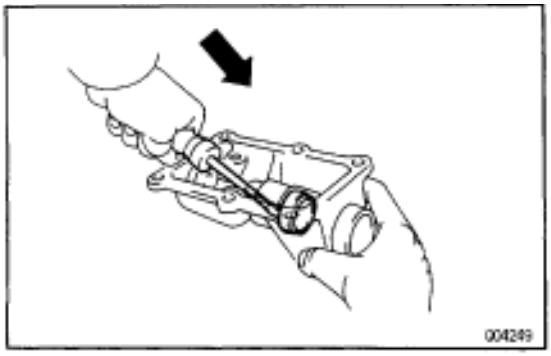

(c) Using a screwdriver, pry out the oil seal.

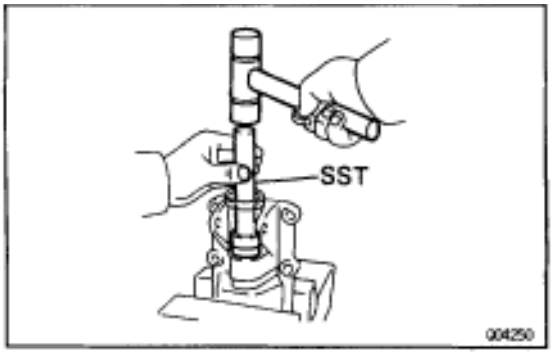

(d) Using SST and a hammer, install a new oil seal. SST 09304–12012
Drive in depth:
55.4–56.0 mm (2.181–2.205 in.)

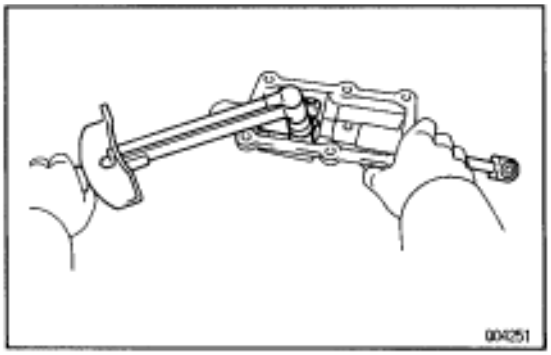

(e) Install the control shaft and No. 2 inner shift lever to the control shift lever retainer.
(f) Install and torque the No. 2 inner shift lever set bolt.
Torque: 39 N·m (400 kgf·cm, 29 ft·lbf)

SERVICE SPECIFICATIONS

SERVICE DATA

Output shaft 2nd gear journal diameter	
Min	42.975 mm (1.6919 in.)
Output shaft 3rd gear journal diameter	
Min	31.969 mm (1.2586 in.)
Output shaft flange thickness	
Min	5.60 mm (0.2205 in.)
Output shaft runout	
Max	0.06 mm (0.0024 in.)
1st gear inner race flange thickness	
Min	4.78 mm (0.1882 in.)
1st gear inner race outer diameter	
Min	42.975 mm (1.6919 in.)
Counter gear bearing journal diameter	
Min	29.950 mm (1.1791 in.)
Counter 5th gear journal diameter	
Min	26.975 mm (1.0620 in.)
1st, 2nd and 3rd Gear thrust clearance	
STD	0.10–0.25 mm (0.0039–0.0098 in.)
Max	0.30 mm (0.0118 in.)
Counter 5th gear thrust clearance	
STD	0.10–0.41 mm (0.0039–0.0161 in.)
Max	0.46 mm (0.0181 in.)
1st, 2nd and counter 5th gear radial clearance	
STD	0.009–0.060 mm (0.0004–0.0024 in.)
Max	0.150 mm (0.0059 in.)
3rd gear radial clearance	
STD	0.015–0.066 mm (0.0006–0.0026 in.)
Max	0.200 mm (0.0079 in.)
Reverse idler gear radial clearance	
STD	0.041–0.074 mm (0.0016–0.0029 in.)
Max	0.194 mm (0.0076 in.)
Reverse idler gear and shift arm shoe clearance	
STD	0.20–0.41 mm (0.008–0.0161 in.)
Max	0.9 mm (0.0354 in.)
Shift fork to hub sleeve clearance	
Max	1.0 mm (0.039 in.)
Synchronizer ring to 1st and 4th gear clearance	
Max	0.5 mm (0.020 in.)
Synchronizer ring to 2nd and 3rd gear clearance	
Max	0.7 mm (0.028 in.)
Input shaft snap ring thickness	
Mark 1	2.05–2.10 mm (0.0807–0.0827 in.)
Mark 2	2.10–2.15 mm (0.0827–0.0846 in.)
Mark 3	2.15–2.20 mm (0.0846–0.0866 in.)
Mark 4	2.20–2.25 mm (0.0866–0.0886 in.)
Mark 5	2.25–2.30 mm (0.0886–0.0906 in.)

	Mark 11	2.30–2.35 mm (0.0906–0.0925 in.)
	Mark 12	2.35–2.40 mm (0.0925–0.0945 in.)
Output shaft snap ring thickness		
No.2 clutch hub	Mark C–1	1.75–1.80 mm (0.0689–0.0709 in.)
No.2 clutch hub No.2	Mark D	1.80–1.85 mm (0.0709–0.0728 in.)
No.2 clutch hub	Mark 11	1.86–1.91 mm (0.0732–0.0752 in.)
No.2 clutch hub	Mark 12	1.92–1.97 mm (0.0756–0.0776 in.)
No.2 clutch hub	Mark 13	1.98–2.03 mm (0.0780–0.0799 in.)
No.2 clutch hub	Mark 14	2.04–2.09 mm (0.0803–0.0823 in.)
No.2 clutch hub	Mark 15	2.10–2.15 mm (0.0827–0.0846 in.)
Rear bearing	Mark 8	2.31–2.36 mm (0.0909–0.0929 in.)
Rear bearing	Mark 9	2.37–2.42 mm (0.0933–0.0953 in.)
Rear bearing	Mark 10	2.43–2.48 mm (0.0957–0.0976 in.)
Rear bearing	Mark 11	2.49–2.54 mm (0.0980–0.1000 in.)
Rear bearing	Mark 12	2.55–2.60 mm (0.1004–0.1024 in.)
Rear bearing	Mark 13	2.61–2.66 mm (0.1028–0.1047 in.)
Rear bearing	Mark 14	2.68–2.73 mm (0.1055–0.1075 in.)
Rear bearing	Mark 15	2.74–2.79 mm (0.1079–0.1098 in.)
Reverse gear	Mark 5	2.25–2.30 mm (0.0886–0.0906 in.)
Reverse gear	Mark 11	2.30–2.35 mm (0.0906–0.0925 in.)
Reverse gear	Mark 12	2.35–2.40 mm (0.0925–0.0945 in.)
Reverse gear	Mark 13	2.40–2.45 mm (0.0945–0.0965 in.)
Reverse gear	Mark 14	2.45–2.50 mm (0.0965–0.0984 in.)
Reverse gear	Mark 15	2.50–2.55 mm (0.0984–0.1004 in.)
Reverse gear	Mark 16	2.55–2.60 mm (0.1004–0.1024 in.)
Reverse gear	Mark 17	2.61–2.66 mm (0.1028–0.1047 in.)
Reverse gear	Mark 18	2.67–2.72 mm (0.1051–0.1071 in.)
Reverse gear	Mark 19	2.73–2.78 mm (0.1075–0.1094 in.)
Reverse gear	Mark 20	2.79–2.84 mm (0.1098–0.1118 in.)
Reverse gear	Mark 21	2.85–2.90 mm (0.1122–0.1142 in.)
Reverse gear	Mark 22	2.91–2.96 mm (0.1146–0.1165 in.)
Reverse gear	Mark 23	2.97–3.02 mm (0.1169–0.1189 in.)
Counter gear snap ring thickness		
Front bearing	Mark A	2.05–2.10 mm (0.0807–0.0827 in.)
Front bearing	Mark B	2.10–2.15 mm (0.0827–0.0846 in.)
Front bearing	Mark C	2.15–2.20 mm (0.0846–0.0866 in.)
Front bearing	Mark D	2.20–2.25 mm (0.0866–0.0886 in.)
Front bearing	Mark E	2.25–2.30 mm (0.0886–0.0906 in.)
Front bearing	Mark F	2.30–2.35 mm (0.0906–0.0925 in.)
No.3 clutch hub	Mark 2	2.06–2.11 mm (0.0811–0.0831 in.)
No.3 clutch hub	Mark 3	2.12–2.17 mm (0.0835–0.0854 in.)
No.3 clutch hub	Mark 4	2.18–2.23 mm (0.0858–0.0878 in.)
No.3 clutch hub	Mark 5	2.24–2.29 mm (0.0882–0.0902 in.)
Rear bearing	Mark 1	1.90–1.95 mm (0.0748–0.0768 in.)
Rear bearing	Mark 2	1.96–2.01 mm (0.0772–0.0791 in.)
Rear bearing	Mark 3	2.02–2.07 mm (0.0795–0.0815 in.)
Rear bearing	Mark 4	2.08–2.13 mm (0.0819–0.0839 in.)
Rear bearing	Mark 5	2.14–2.19 mm (0.0843–0.0862 in.)
Rear bearing	Mark 6	2.20–2.25 mm (0.0866–0.0886 in.)

Rear bearing Mark 7	2.26–2.31 mm (0.0890–0.0909 in.)
Oil seal drive in depth	
Front bearing retainer (from retainer end)	11.4–12.0 mm (0.449–0.472 in.)
Control shift lever retainer	55.4–56.0 mm (2.181–2.205 in.)

TORQUE SPECIFICATIONS

Part tightened	N·m	kgf·cm	ft·lbf
Transmission x Engine			
12 mm bolt	72	730	53
10 mm bolt	37	380	27
Engine rear mounting x Transmission	25	250	18
Rear engine mounting member			
Nut	13	135	10
Bolt	25	260	19
Transmission x Starter	39	400	29
Clutch release cylinder set bolt	13	130	9
Transmission shift lever x Transmission	19	195	14
Propeller shaft x Differential	93	950	69
Propeller shaft center bearing	49	500	36
Crossmember brace set bolt	13	130	9
Heat insulator set nut	5.4	55	48 in.·lbf
Exhaust center pipe x Tail pipe	19	195	14
Exhaust front pipe x Exhaust center pipe	43	440	32
Exhaust pipe support bracket set bolt	37	380	27
Exhaust No.2 front pipe x Exhaust front pipe	43	440	32
Oxygen sensor set nut	18	180	13
Shift lever x Control shift lever arm	7.8	80	69 in.·lbf
Shift fork set bolt	20	200	14
Straight screw plug	25	250	18
Reverse idler gear shaft stopper bolt	25	250	18
Oil separator x Intermediate plate	18	185	13
Front bearing retainer set bolt	25	250	18
Extension housing x Intermediate plate	37	380	27
Restrict pin	40	410	30
Shift lever housing x Shift and select lever shaft	39	400	29
Control shift lever retainer x Extension housing	18	185	13
No.2 inner shift lever x Control shaft	39	400	29
No.1 control shift yoke x Control shaft	19	195	14
Drain and filler plugs	39	400	29
Back–up light switch	40	410	30
Control shift lever arm x Control shift lever retainer	25	250	18
Control shift lever arm x Extension housing	19	195	14
Clutch housing x Transmission case	37	380	27
Rear bearing retainer x Intermediate plate	18	185	13

FOREWORD

This manual has been prepared for use when performing terminal repairs, wire repairs, or connector repairs on vehicles.

A step–by–step section on connector repair and terminal repair is included.

There is a section of charts with terminal and connector illustrations, part numbers, and notes on terminal removal.

By using this guide, a satisfactory repair of the wiring harness and connectors in Toyota vehicles will be easy to achieve.

All information in this manual is based on the latest product information at the time of publication. However, specifications and procedures are subject to change without notice.

TOYOTA MOTOR CORPORATION

● 2002 TOYOTA MOTOR CORPORATION
All rights reserved. This book may not be reproduced or copied, in whole or in part, without the written permission of Toyota Motor Corporation.

GENERAL INFORMATION

This manual provides instruction in the following repairs:

- How to Inspect for System Inspection
- Circuit Protection
- Terminal and Connector Repair Procedure

NOTICE:
When inspecting or repairing the SRS AIRBAG, be sure to carefully read the precautionary instructions and procedure in the Repair Manual for the applicable model.

A

After any electrical repair is made, always test the circuit by operating the devices in the circuit. This confirms not only that the repair is correct, but also that the cause of the complaint was correctly identified.

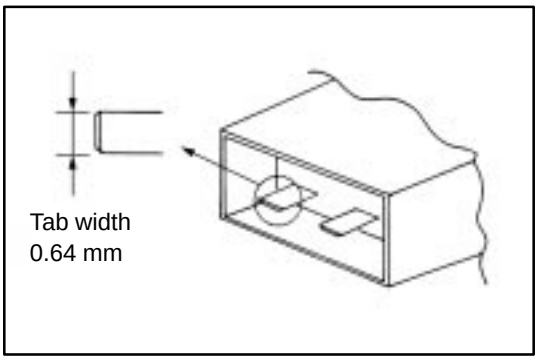

Terminal type number name

The terminal type number naming system has changed: the metric system will be used in place of the inch system. To be more specific, male tab width ”in millimeters” will be used as terminal type number from now on — in place of male tab width in inches which has been in use so far.

Below is a table of comparison:

Old terminal type No. (inch)		New terminal type No. (mm)
025	→	0.64
040 (II, III, IV)	→	1.0 (II, III, IV)
050	→	1.3
070 (II)	→	1.8 (II)
090 (II)	→	2.3 (II)
187	→	4.8
250 (II)	→	6.3 (II)
305	→	7.7
312	→	8.0
375	→	9.5

For those connectors which are not shown above, the terminal type numbers remain unchanged.

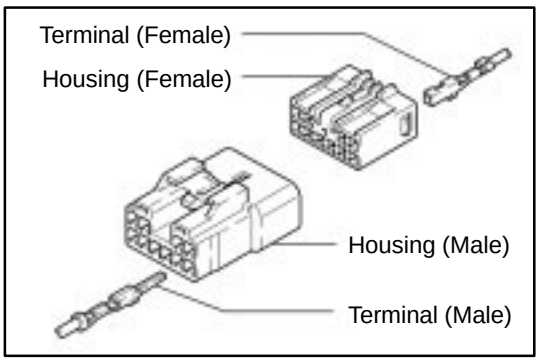

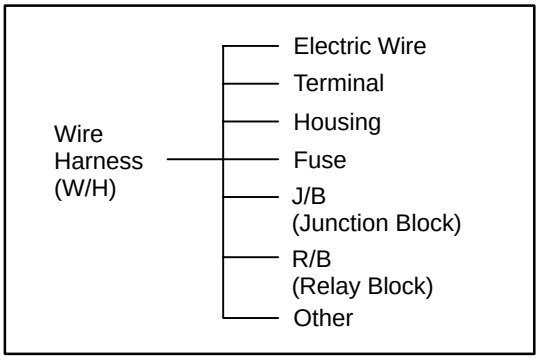

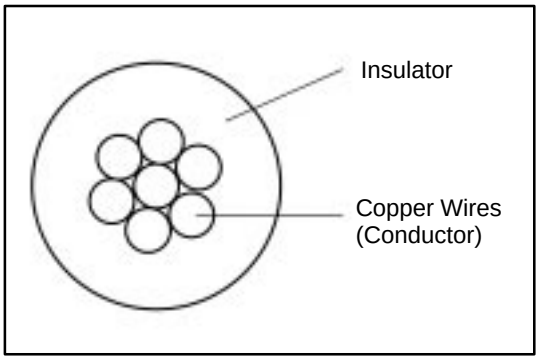

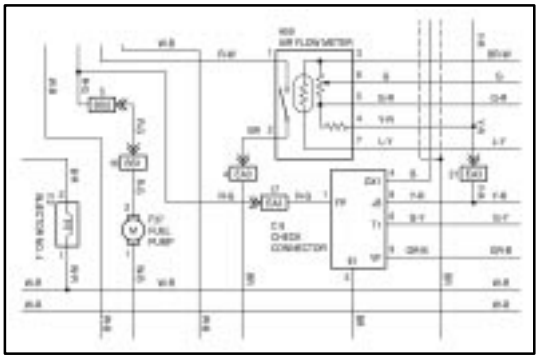

B	=	Black	W	=	White
L	=	Blue	BR	=	Brown
V	=	Violet	SB	=	Sky Blue
R	=	Red	G	=	Green
P	=	Pink	LG	=	Light Green
Y	=	Yellow	GR	=	Gray
O	=	Orange			

What is Wire Harness?

The wire harness (W/H) is systems of electric wires for automobiles to connect all the electronics parts in automobile electrically and work them. As more electronics parts are introduced in automobiles recently, the electric wires used for the wire harness are increasing in number and the structure is becoming more complicated. As a result of that, there are hundreds of connectors, which is the parts which connects wires mechanically and electrically, in one vehicle. Therefore, numbers of the connector terminal (Terminal) or the connector housing (Housing) are designed to meet many kinds of uses of circuits. Various components have been improved to ensure the product reliability or realize a wider space in the vehicles.

Wire Harness Components

Wire harness mainly consists of wires, terminals, or housings.
There are various components are designed for many parts of vehicles, such as one with high heat–resistance, water–resistance, or bending ability, ones have different current capacities, or ones are hardly influenced by electromagnetic noise.

Electric Wire

The electric wires used for the wire harness consists of the conductor made from numbers of twisted mild copper wire with a diameter of less than 0.5 mm and the insulator surrounding the conductor.
The insulator is generally made from vinyl chloride and covers the conductor with even thickness. The insulators are color–coded in order to distinguish each wire. The base colors or the stripe patterns is used to make difference between insulators. Each color of wires is indicated by the abbreviation in the repair manual and the electrical wiring diagram.

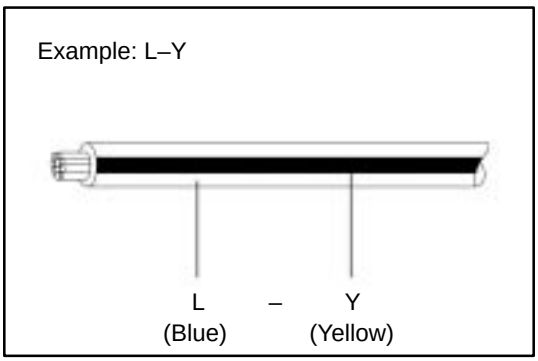

The first letter indicates the basic wire color and the second letter indicates the color of the stripe.

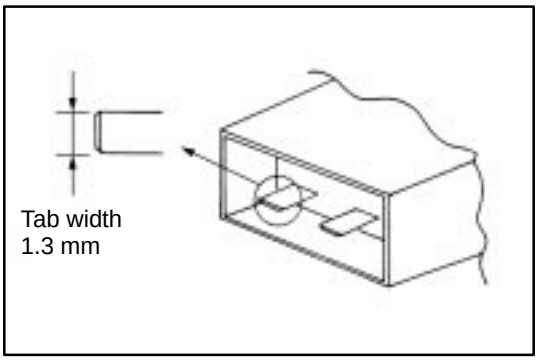

Terminal and housing

Terminal connects wires and housing insulates connecting parts.

There are the male terminal and the female terminal. The types of terminals are decided by tab width of male terminal. And the terminal with the rubber plug or the rubber ring is used in the part, such as the engine compartment, which become wet. For the circuit with slight current at EFI system or ABS system, the gold–plated terminal is introduced for ensuring reliabilities.

As the number of the circuit is increasing recently, there are new types of parts introduced. For example, there is the hybrid type housing, which is a combination of terminals with different tab width, such as the power source terminal or the signal terminal. Also, new type of connector such as the double lock housing, which is designed with the retainer in addition to the lance to prevent terminal from slipping off, is available. The new type of connectors are produced to realize higher product reliabilities and utilized widely recently. The major characteristics of these new connectors are shown in the table 1.

There are two types of lances: housing lance, which is inside the housing and terminal lance, which is inside the terminal.

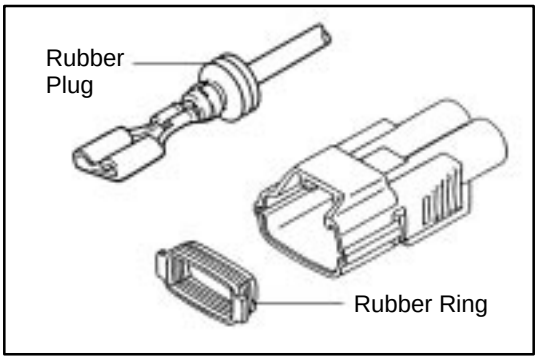

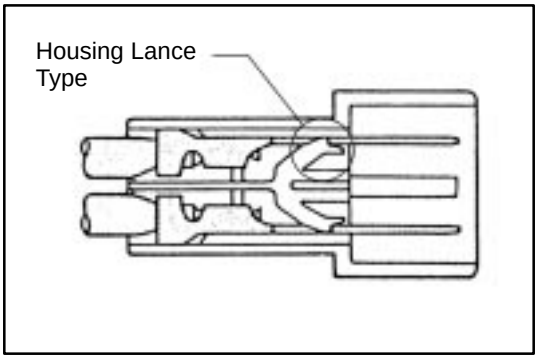

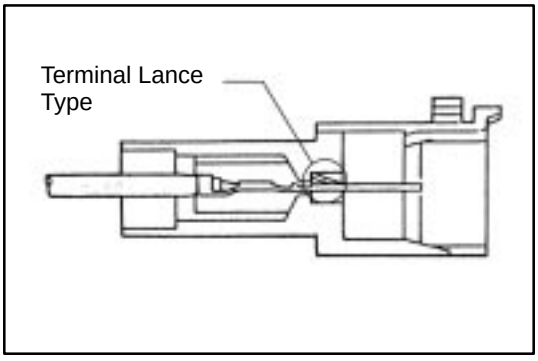

Table 1 : Characteristics of the new types of connector (Improvement)

Characteristics (Improvement)	Note
1. Double Lock 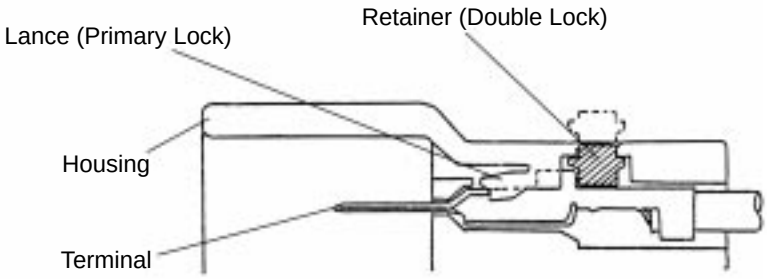 	If terminal is not inserted to housing correctly, the retailer does not fit.
2. Extension of Housing 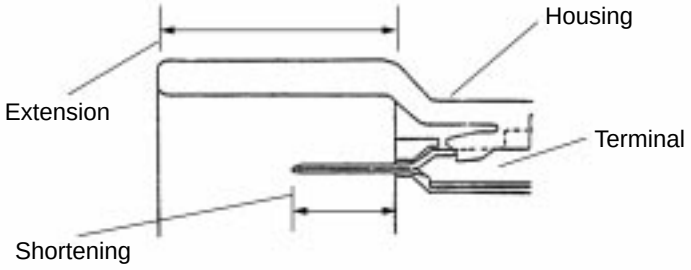 	This is to prevent deformation of the terminal when it is inserted diagonally.
3. Change of Contact Structure and Introduction of Box–Shaped Structure 	Expansion of contact section Stabilization of contact pressure
4. Change of Locking Shape 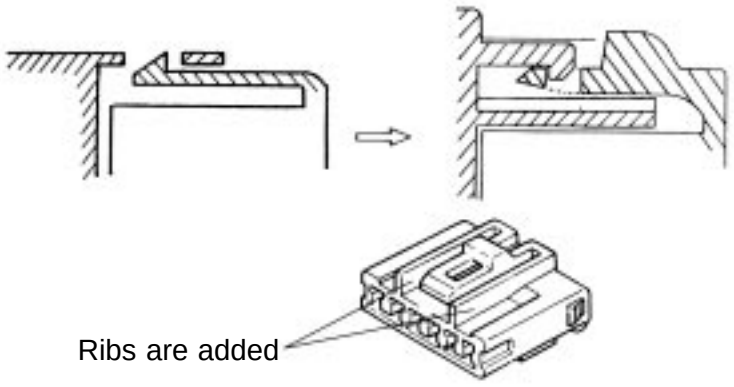 	This improves the close fit of locking and you can hear the click sound and feel that the connector is completely installed.

HOW TO PERFORM FOR SYSTEM INSPECTION

This inspection procedure is a simple troubleshooting which should be carried out on the vehicle during system operation and is based on the assumption of system component trouble

Always inspect the trouble taking the following items into consideration:

- Ground point fault
- Open or short circuit of the wire harness
- Connector or terminal connection fault
- Fuse or fusible link fault

NOTICE:

- **This is an on–vehicle inspection during system operation. Therefore, inspect the trouble with due regard for safety.**
- **If connecting the battery directly, be careful not to cause a short circuit, and select the applicable voltage.**

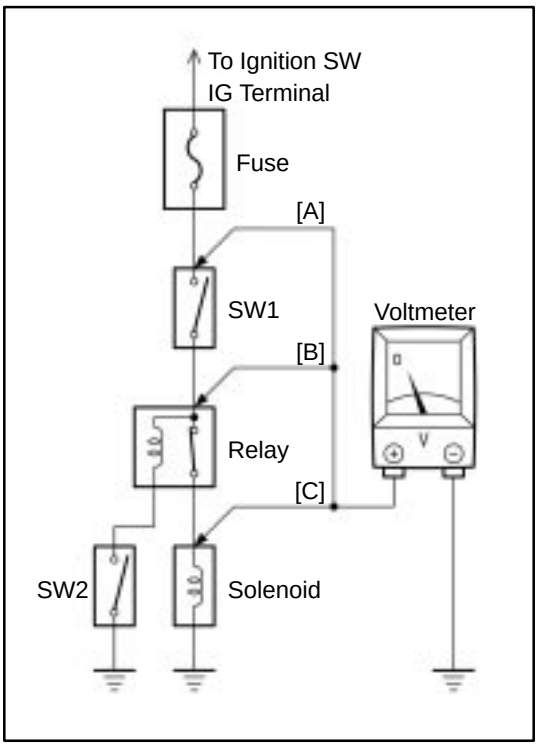

1. Voltage Check

(a) Establish conditions in which voltage is present at the check point.

Example:
[A] – Ignition SW on
[B] – Ignition SW and SW 1 on
[C] – Ignition SW, SW 1 and Relay on (SW 2 off)

(b) Using a voltmeter, connect the negative (–) lead to a good ground point or negative (–) battery terminal and the positive (+) lead to the connector or component terminal. This check can be done with a test bulb instead of a voltmeter.

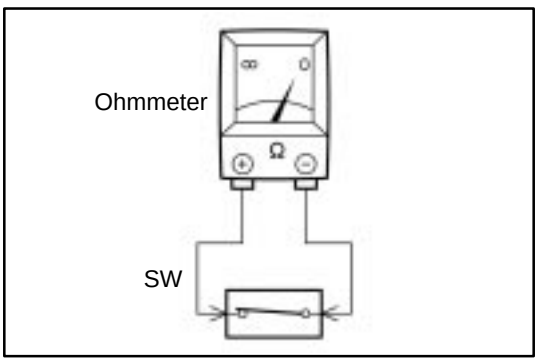

2. Continuity and Resistance Check

(a) Disconnect the battery terminal or wire so there is no voltage between the check points.

(b) Contact the two leads of an ohmmeter to each of the check points.

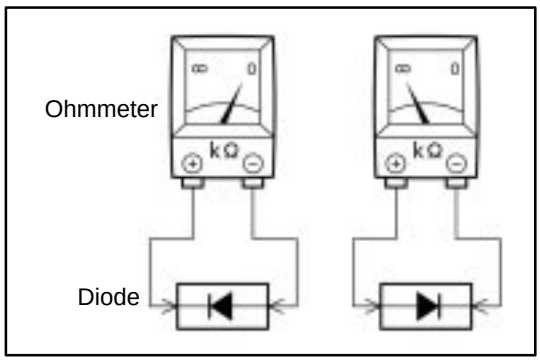

If the circuit has diodes, reverse the two leads and check again.
When touching the negative (–) lead to the diode positive (+) side and the positive (+) lead to the negative (–) side, there should be continuity. When touching the two leads in reverse, there should be no continuity.

HINT: Specifications may vary depending on the type of tester, so refer to the tester's instruction manual before performing the inspection.

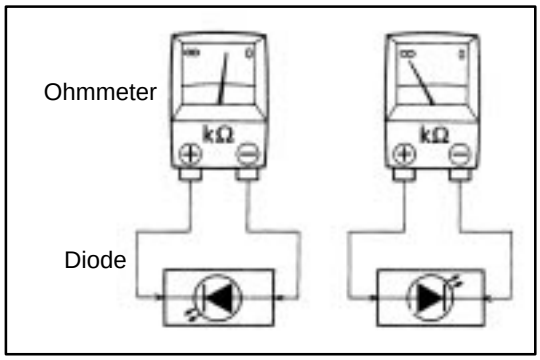

Check LED (Light Emitting Diode) in the same manner as that for diodes.

HINT:

- Use a tester with a power source of 3V or greater to overcome the circuit resistance.
- If a suitable tester is not available, apply battery voltage and check that the LED lights up.

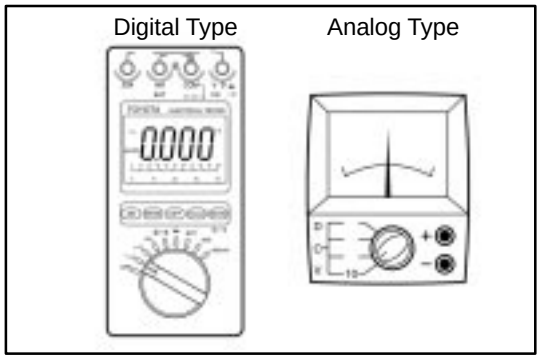

(c) Use a volt/ohmmeter with high impedance (10kΩ/V minimum) for troubleshooting of the electrical circuit.

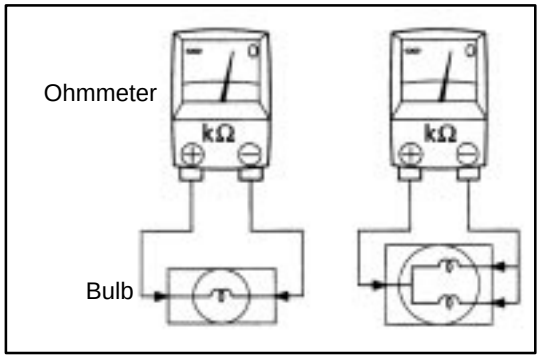

3. Bulb Check

(a) Remove the bulb.

(b) There should be continuity between the respective terminals of the bulb together with a certain amount of resistance.

(c) Apply the two leads of the ohmmeter to each of the terminals.

(d) Apply battery voltage and check that the bulb light up.

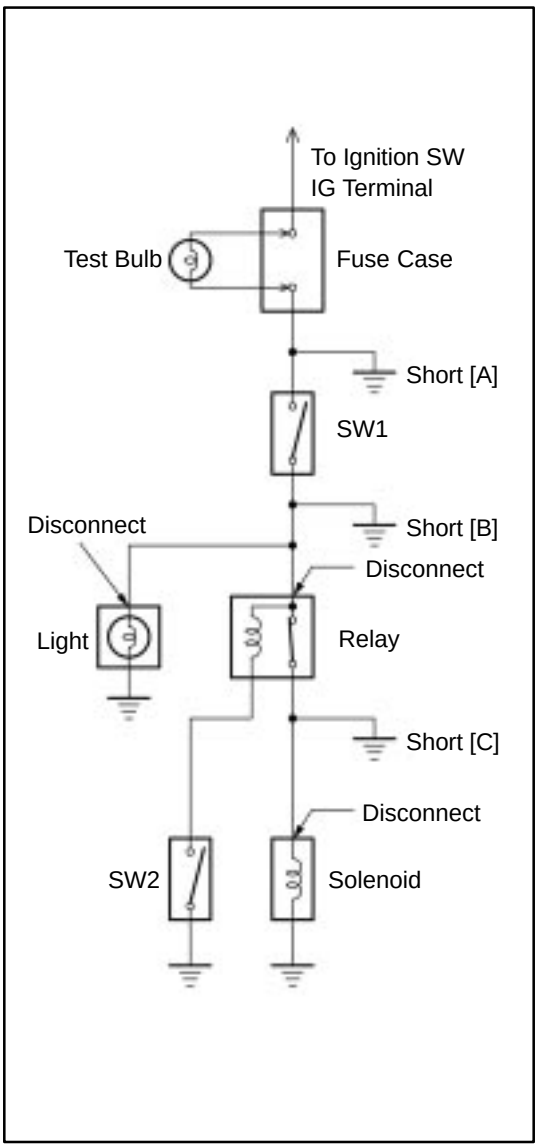

4. Finding a Short Circuit

(a) Remove the blown fuse and eliminate all loads from the fuse.

(b) Connect a test bulb in place of the fuse.

(c) Establish conditions in which the test bulb comes on.

Example:
[A] – Ignition SW on
[B] – Ignition SW and SW 1 on
[C] – Ignition SW, SW 1 and Relay on (Connect the Relay) and SW 2 off (or disconnect SW 2)

(d) Disconnect and reconnect the connectors while watching the test bulb. The short lies between the connector where the test bulb stays lit and the connector where the bulb goes out.

(e) Find the exact location of the short by lightly shaking the problem wire along the body.

CAUTION:

(a) **Do not open the cover or the case of the ECU unless absolutely necessary. (If the IC terminals are touched, the IC may be destroyed by static electricity.)**

(b) **When replacing the internal mechanism (ECU part) of the digital meter, be careful that no part of your body or clothing comes in contact with the terminals of leads from the IC, etc. of the replacement part (spare part).**

CIRCUIT PROTECTION

All electrical circuits are protected against excessive loads which might occur because of shorts or overloads in the wiring system. Such protection is provided by a fuse, circuit breaker, or fusible link, A short circuit may cause a fuse to blow or a circuit breaker to open.

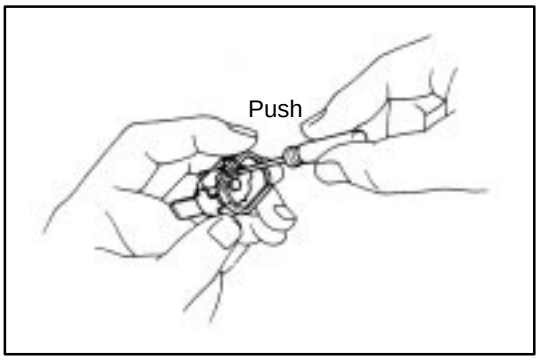

RESET CIRCUIT BREAKER

1. Remove Circuit Breaker

(a) Disconnect the negative (–) cable from the battery.

(b) Remove the circuit breaker.

2. Reset Circuit Breaker

(a) Insert the needle into the reset hole and push it.

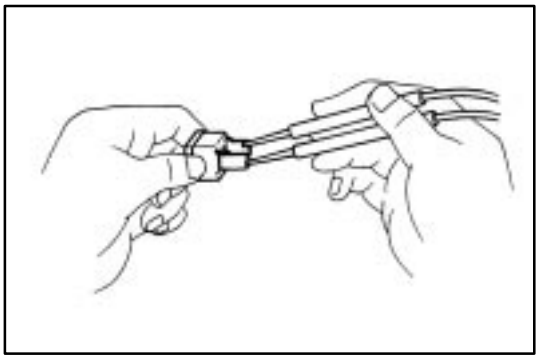

(b) Using an ohmmeter, check that there is continuity between both terminals of the circuit breaker.

If continuity is not as specified, replace the circuit breaker.



Equal Amperage Rating

HINT: If replacing the circuit breaker, be sure to replace it with a breaker with an equal amperage rating.

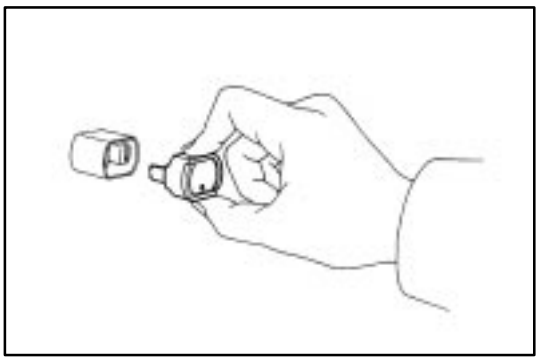

3. Install Circuit Breaker

(a) Install the circuit breaker.

(b) Connect the negative (–) cable to the battery.

HINT: If a circuit breaker continues to cut out, a short circuit is indicated. Have the system checked by a qualified technician.

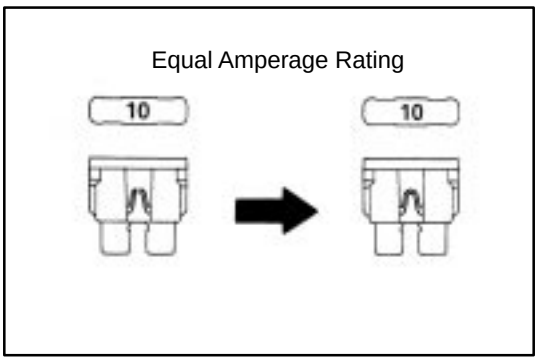

REPLACEMENT OF FUSE AND FUSIBLE LINK

HINT: If replacing the fuse or fusible link, be sure to replace it with a fuse or fusible link with an equal amperage rating.

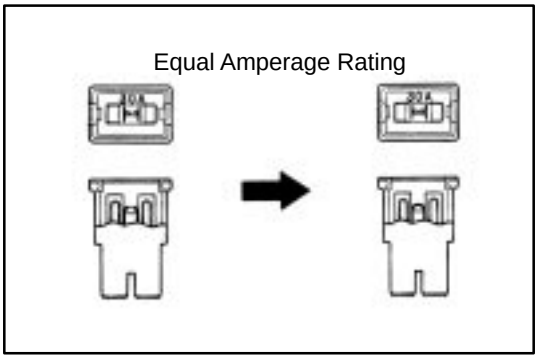

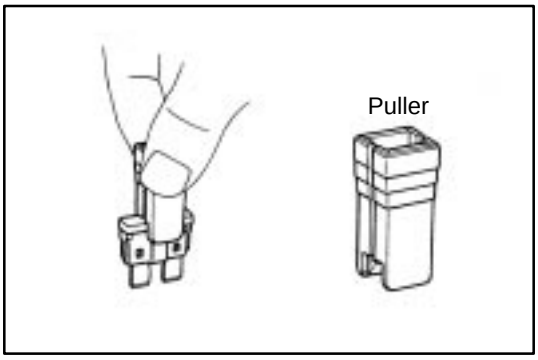

NOTICE:

1. **Turn off all electrical components and the ignition switch before replacing a fuse or fusible link. Do not exceed the fuse or fusible link amperage rating.**
2. **Always use a fuse puller for removing and inserting a fuse. Remove and insert straight in and out without twisting. Twisting could force open the terminals too much, resulting in a bad connection.**

If a fuse or fusible link continues to blow, a short circuit is indicated. The system must be checked by a qualified technician.

HINT: The puller is located at Junction Block No.2.

PREPARATORY ITEMS

Tool	Crimping tool	AMP Part No. 169060	For caulking press sleeves
	Special tool	Refer to the following illustration	To remove the terminal
	SST	09991–00500	To remove the 0.64 connector terminal
Gauge	Caliper	0–150 mm	To measure the diameter of the core
Others	Press sleeve	82999–12010 (Red) 82999–12020 (Blue) 82999–12030 (Yellow)	To connect wires
	Silicon tape	08231–00045	To waterproof the connected section

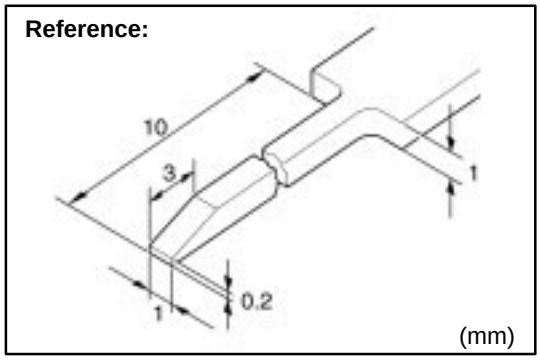

Special Tool

HINT: To remove the terminal from the connector, please construct and use the special tool or like object shown on the left.

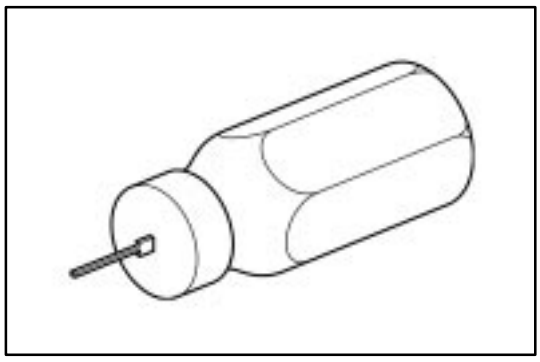

Preparation of the SST to release the 0.64 connector terminal.
SST 09991–00500

HINT:
This is a SST for releasing terminals from 0.64 connectors.

CONNECTOR REPAIR

The repair parts now in supply are limited to those connectors having common shapes and terminal cavity numbers. Therefore, when there is no available replacement connector of the same shape or terminal cavity number, please use one of the alternative methods described below. Make sure that the terminals are placed in the original order in the connector cavities, if possible, to aid in future diagnosis.

1. When a connector with a different number of terminals than the original part is used, select a connector having more terminal cavities than required, and replace both the male and female connector parts.

   EXAMPLE: You need a connector with six terminals, but the only replacement available is a connector with eight terminal cavities. Replace both the male and female connector parts with the eight terminal part, transferring the terminals from the old connectors to the new connectors.

2. When several different type terminals are used in one connector, select an appropriate male and female connector part for each terminal type used, and replace both male and female connector parts.

   EXAMPLE: You need to replace a connector that has two different types of terminals in one connector. Replace the original connector with two new connectors, one connector for one type of terminal, another connector for the other type of terminal.

3. When a different shape of connector is used, first select from available parts a connector with the appropriate number of terminal cavities, and one that uses terminals of the same size as, or larger than, the terminal size in the vehicle. The wire lead on the replacement terminal must also be the same size as, or larger than, the nominal size of the wire in the vehicle. (”Nominal” size may be found by looking at the illustrations in the section F or by direct measurement across the diameter of the insulation). Replace all existing terminals with the new terminals, then insert the terminals into the new connector.

   EXAMPLE: You need to replace a connector that is round and has six terminal cavities. The only round replacement connector has three terminal cavities. You would select a replacement connector that has six or more terminal cavities and is not round, then select terminals that will fit the new connector. Replace the existing terminals, then insert them into the new connector and join the connector together.

TERMINAL REPLACEMENT

These steps **must** be followed when replacing a terminal.

Step 1. Identify the connector and the terminal type.



Step 2. Disconnect the terminal from the connector.



Step 3. Replace the terminal.



Step 4. Install the terminal into the connector.

Step 1. Identify the connector and the terminal type.

Confirm whether the connector you require is the non–waterproof, waterproof or combined terminal type connector from the pictures provided in the following charts.

Connector	Description
Non–Waterproof Type	Those connectors which are not of the waterproof or combined terminal type.
Waterproof Type	Waterproof material (hole plug or terminal packing) is provided on the terminal/connector body.
Combined Terminal Type	Terminals of different shape/size are located in one connector.

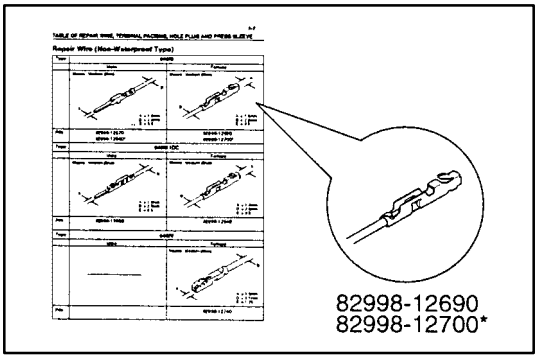

1. Terminal with Wire

Identify the part number of the terminal with wire by picking out the corresponding illustration from the pictures provided on the following charts.

HINT: In some of the illustrations, there are two part numbers for the same illustration of terminal with wire, because although the shapes of the terminals are completely the same, there is a difference in with /without gold–plating (gilded).

Remark: The length of the wire connected to the terminal is approximately 150 mm.

NOTICE:
- **When the terminal used is gold plated, be sure to replace it with a gold plated terminal when marking repairs.**
- **Do not use male and female terminals which are made of different materials from each other.**

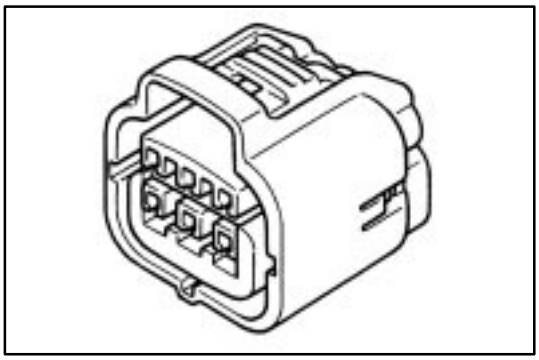

2. Connector Body

(a) Identify the part number of the corresponding terminal with wire according to the above–mentioned 1.

(b) Identify the part number of the connector body by picking out the correct one from the illustrations according to the number of terminals and the shape.

HINT:

(a) If you can find no connector which matches the type you require, pick out male and female connector bodies as a set which have more terminals than you require.

For the combined terminal type connector body, pick out and appropriate connector body for each terminal being used.

Example:
When two types of terminal are used in one connector body, pick out a male and female for two different connector bodies.

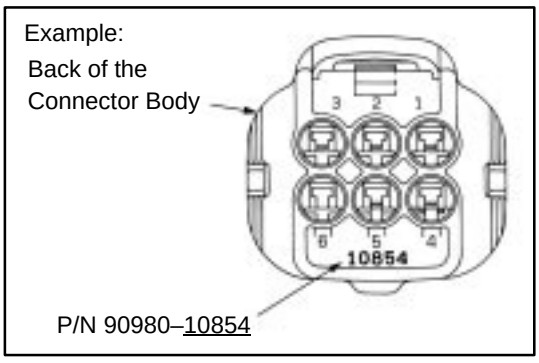

(b) The part number has been stamped on the back of the connector body. (This will continue to be done to new types of connector.)

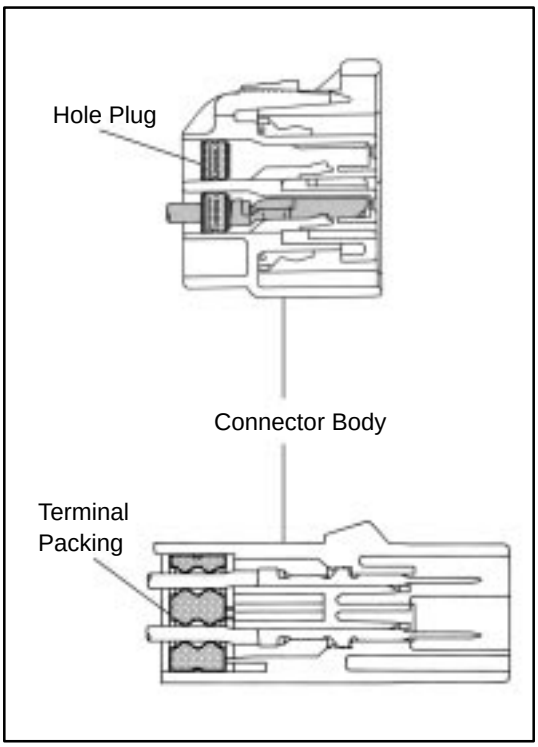

3. Hole Plug/Terminal Packing

(a) Identify the part number of the appropriate terminal with wire/connector body from the illustrations of waterproof type connector according to the above–mentioned 1 and 2.

(b) Identify the part number of the hole plug/terminal packing from the corresponding illustration.

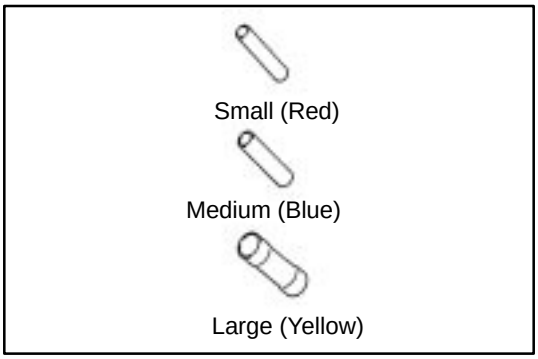

4. Sleeve

When connecting two wires using a sleeve, select the sleeve according to the following table.

Wire Outside Diameter	Sleeve Size (Color)
0.2–1.0 mm	Small (Red)
1.0–2.0 mm	Medium (Blue)
3.0–5.0 mm	Large (Yellow)

(a) When size is based on the outside diameter of the wire.

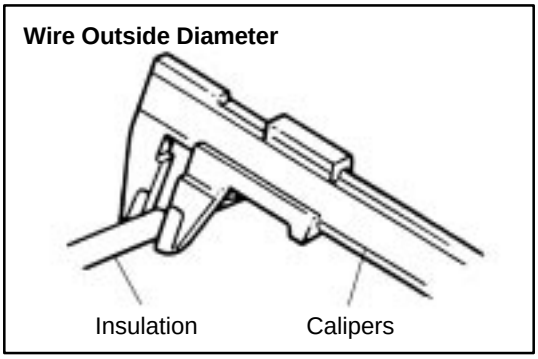

＊ \ ＊	0.3	0.5	0.85	1.25	2	3	5
0.3	S	M	M	M	M	L	L
0.5	M	M	M	M	M	L	L
0.85	M	M	M	M	L	L	L
1.25	M	M	M	M	L	L	L
2	M	M	L	L	L	L	—
3	L	L	L	L	L	L	—
5	L	L	L	L	—	—	—

＊ Nominal size of the wire

(b) When size is based on the nominal size of the wire.

Sleeve size

S : Small (Red)

M : Medium (Blue)

L : Large (Yellow)

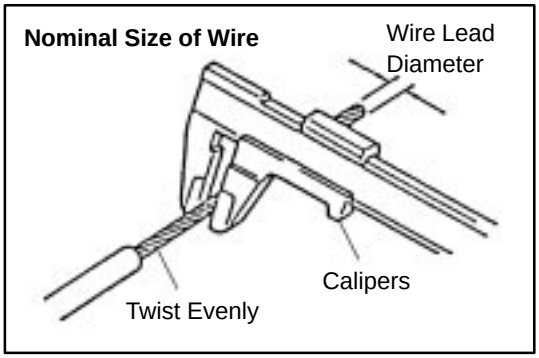

HINT: To calculate the ”Nominal Size” of the wire.

Nominal size =

$$\frac{3.14 \times (\text{Diameter of stripped wire harness})^2}{4}$$

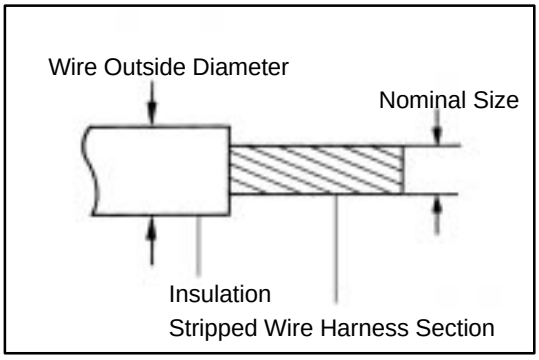

HINT: Outside Diameter and Nominal Size

Step 2. Disconnect the Terminal from the Connector.

1. Disconnect Connector

To pull apart the connectors, pull on the connector itself, not the wire harness.

HINT: Check to see what kind of connector you are disconnecting before pulling apart.
Press down type is mainly used.

Example:

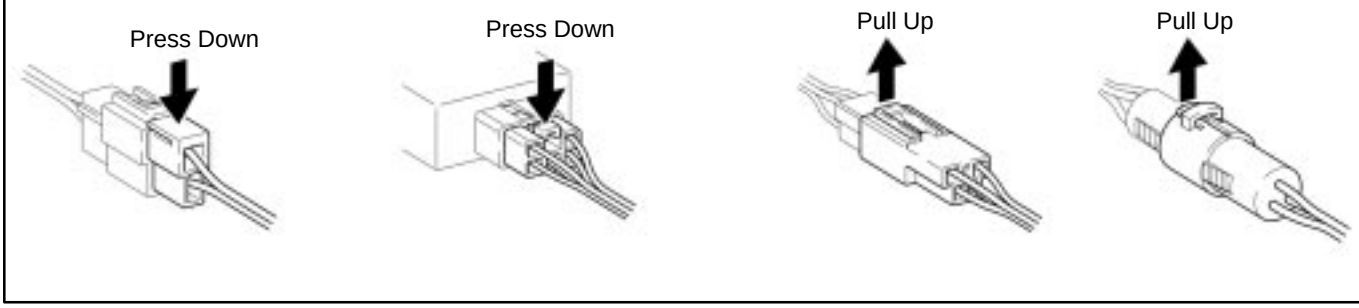

Refereance:

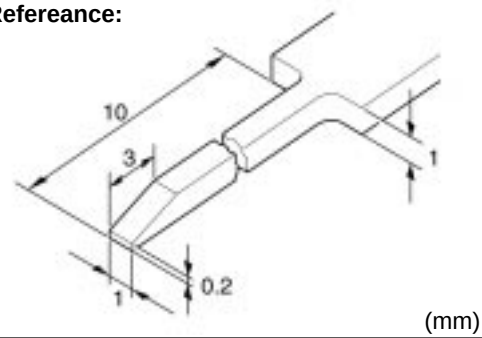

2. Prepare the Special Tool

HINT: To remove the terminal from the connector, please construct and use the special tool or like object shown on the left.

Example:

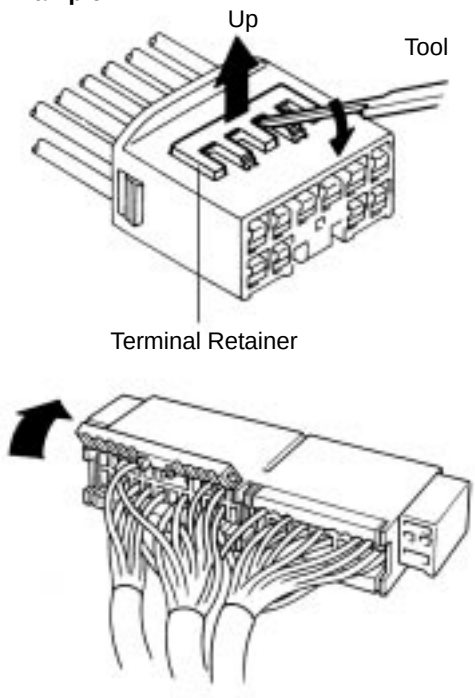

3. Disengage the double locking device or terminal retainer.

(a) Locking device must be disengaged before the terminal locking clip can be released and the terminal removed from the connector.

(b) Use a special tool or the terminal pick to unlock the double locking device.

NOTICE:
Do not remove the terminal retainer from connector body.

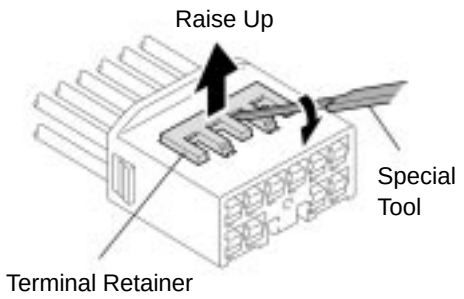

Type A (For 1.0II, 1.8, 2.3II, 4.8 and 8.0 of Non–Waterproof Type Connector)

(1) Using the special tool, raise the retainer up to the temporary lock position.

HINT: The needle insertion position varies according to the connector's shape (number of terminals, etc.), so check the position before inserting it.

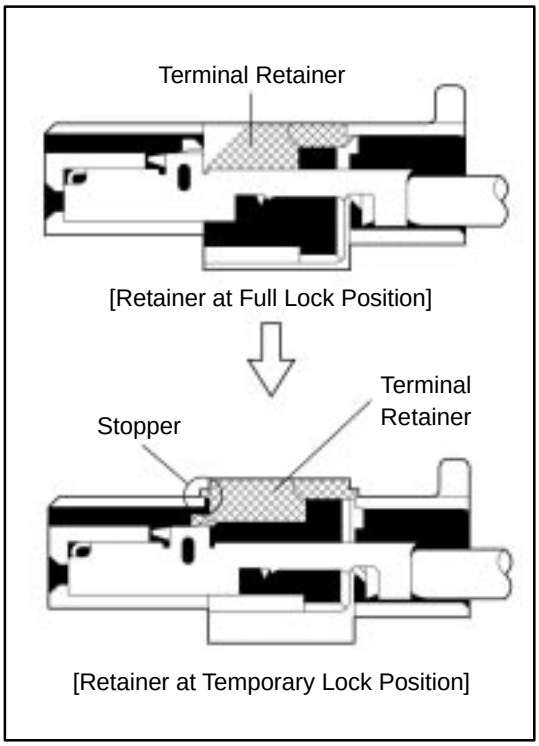

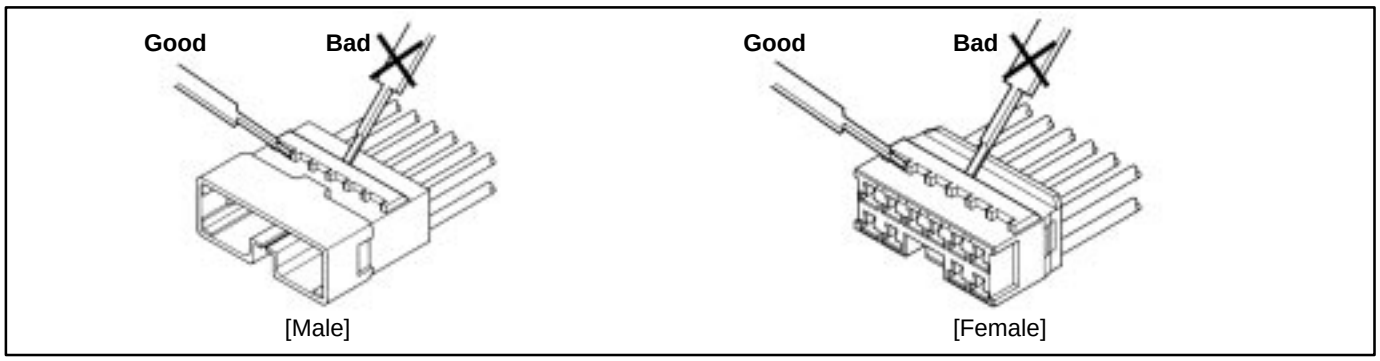

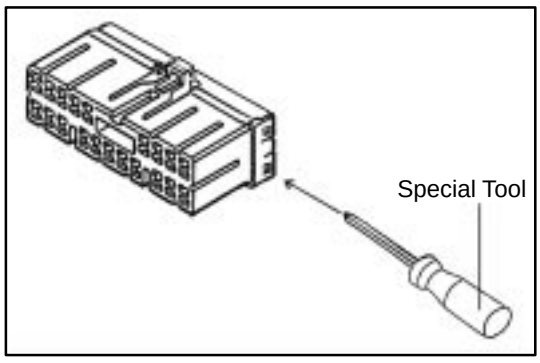

Type B (For 1.8, 1.0 and TLC of Non–Waterproof Type Connector)

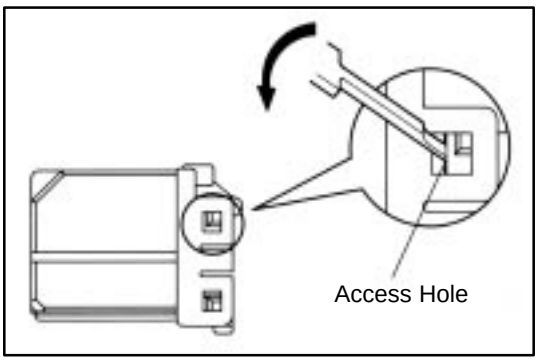

(1) Press the special tool at a 45° angle into the locking lug access hole as shown.

Raise the double locking device up as far as possible.

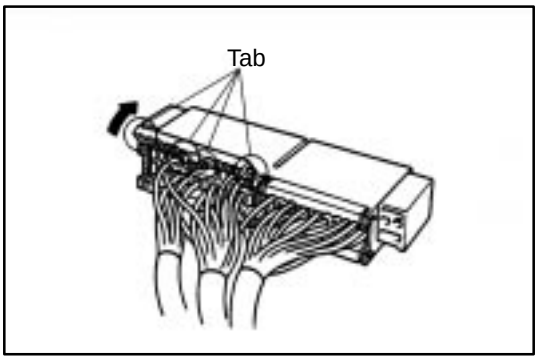

(2) Remove the special tool and open the double locking device

NOTICE:
TLC housing is not be reusable. Please replace it with the new one after replacement of the terminal.

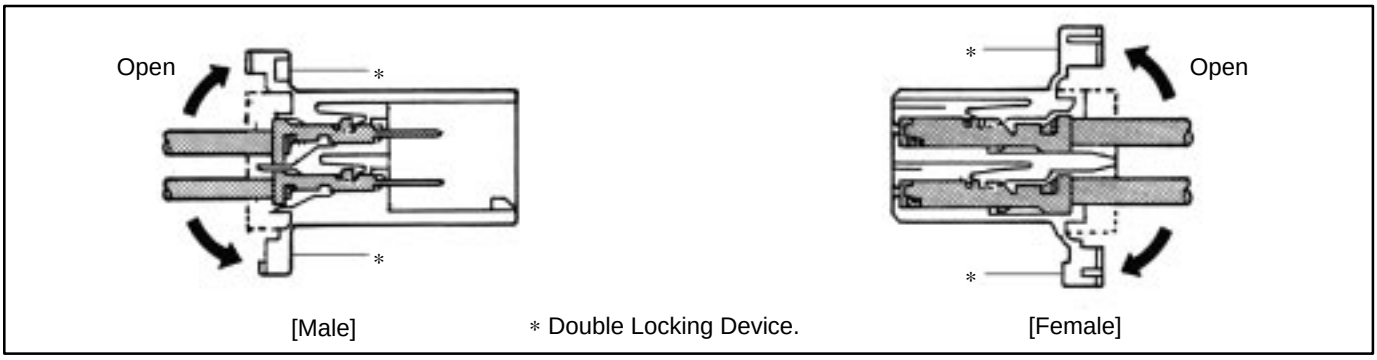

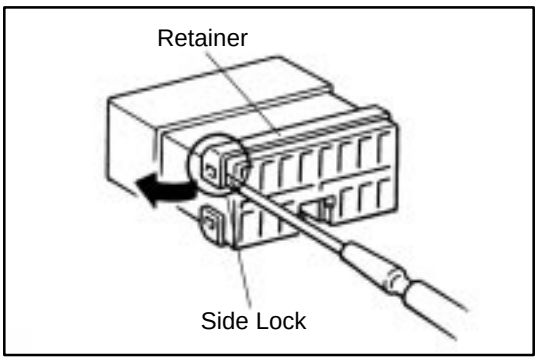

Type C (For TNS, FTC Type Connector)

(1) Widen the side lock part of the retainer from side to side using the special tool.

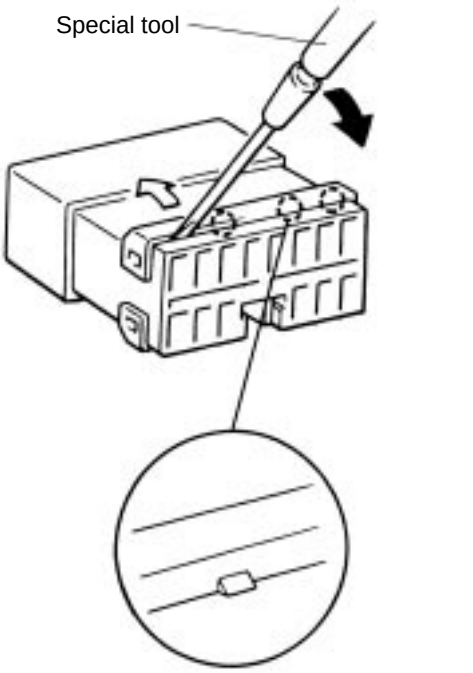

(2) Inset the special tool into the chink between the retainer and the terminal itself. Then pry it to the direction of the arrow shown in the illustration and push the retainer up to release the lock.

NOTICE:

- **Do not insert the special tool too much. It may cause damage on the fit section of the terminal and the wire harness.**
- **TNS housing is not reusable. Please replace it with the new one after replacement of the terminal.**

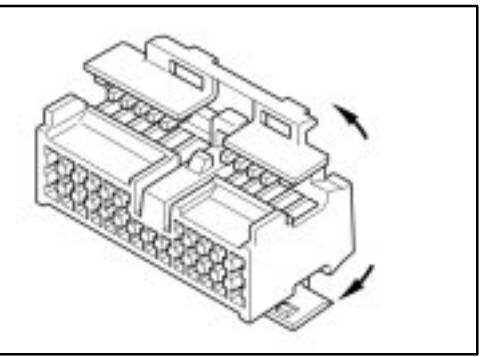

Type D (For 1.3 of Non–Waterproof Type Connector)

[Case 1]

(1) Use the special tool to unlock the double locking device.

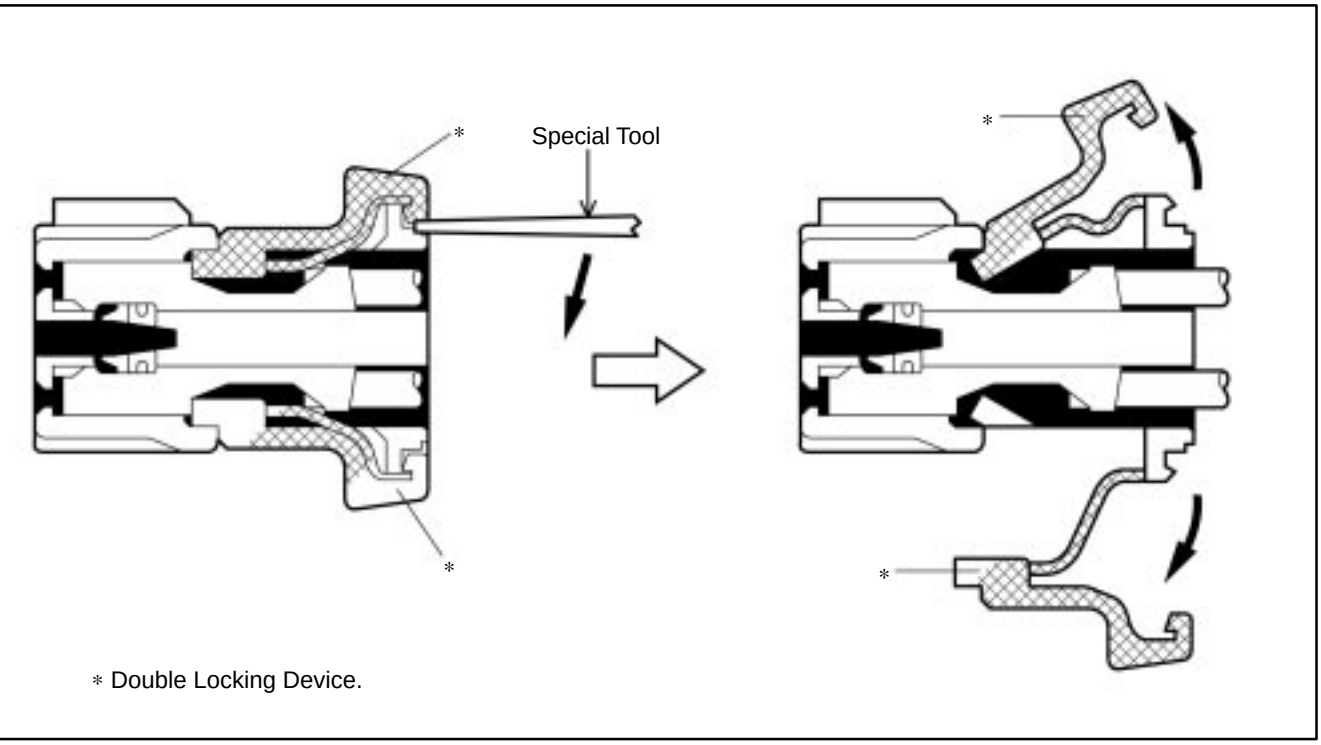

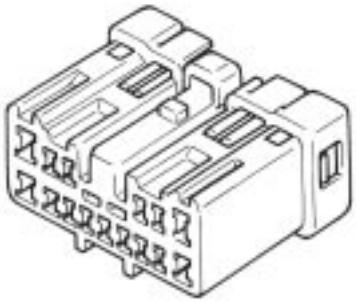

[Case 2]

(1) Using the special tool, push the terminal retainer locking lug (clip) and pull the terminal retainer up to the temporary lock position.

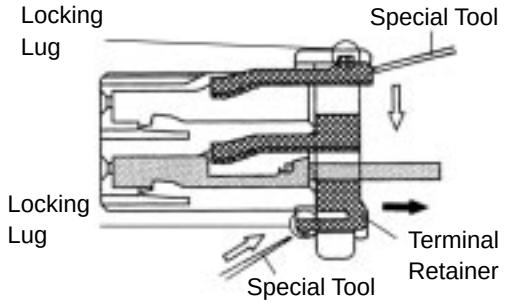

[Retainer at Full Lock Position]

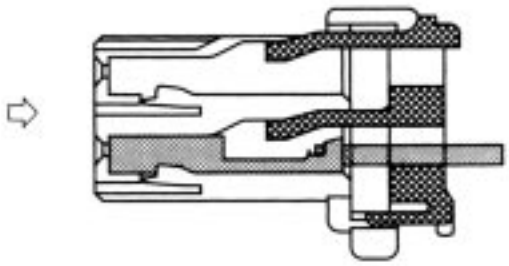

[Retainer at Temporary Lock Position]

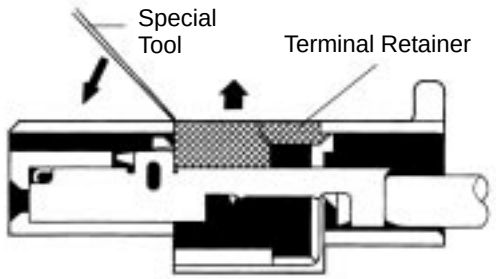

[Retainer at Full Lock Position]

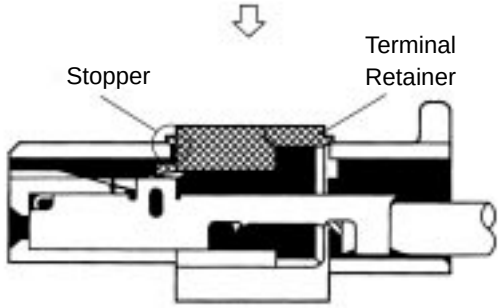

[Retainer at Temporary Lock Position]

[Case 3]

(1) Using the special tool, raise the retainer up to the temporary lock position.

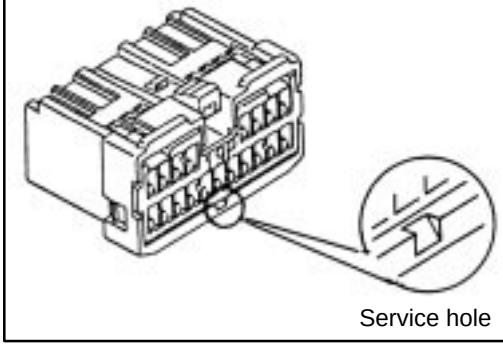

[Case 4]

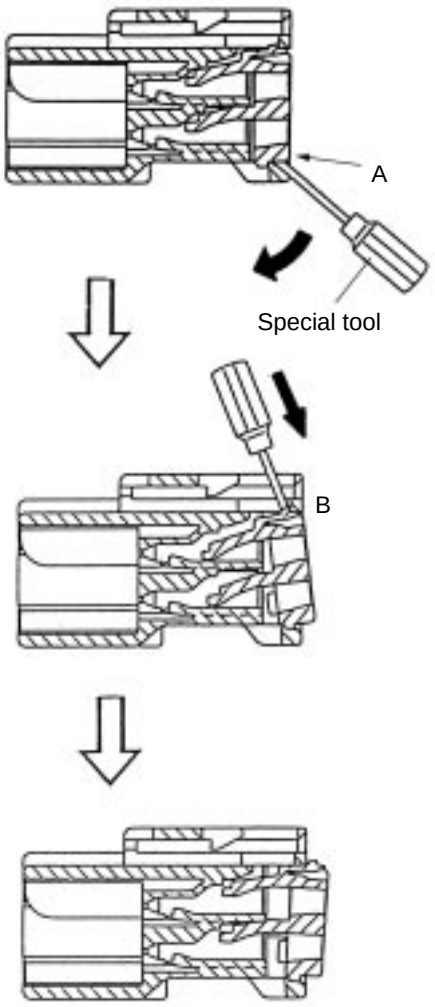

Appearance when the double locking is released

(1) Insert the special tool into the service hole and move it to the direction of the arrow to release the lock on the side A.

(2) Push the lock on the side B up by the special tool and release the lock. Then pull the retainer forward.

Type E (For 1.8, 2.3, 2.3II, 4.8, 6.3 and 8.0 of Waterproof Type Connector)

HINT: Terminal retainer color is different according to connector body.
Example:

Terminal Retainer	:	Connector body
Black or White	:	Gray
Black or White	:	Dark Gray
Gray or White	:	Black

[Case 1]

Type where terminal retainer is pulled up to the temporary lock position (Pull Type).

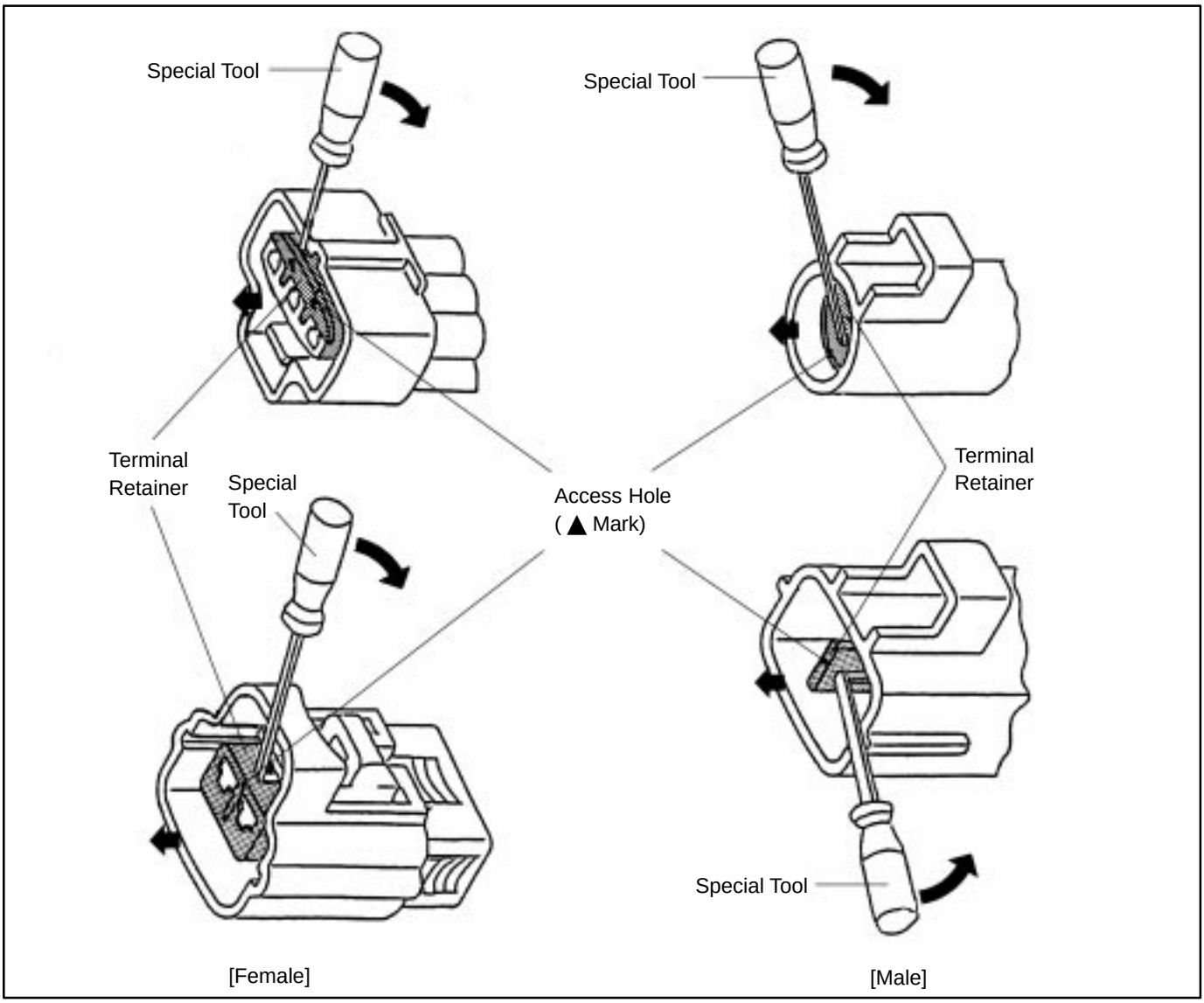

(1) Insert the special tool into the terminal retainer access hole (▲ Mark) and pull the terminal retainer up to the temporary lock position.

HINT: The needle insertion position varies according to the connector's shape (Number of terminals etc.), so check the position before inserting it.

Example:

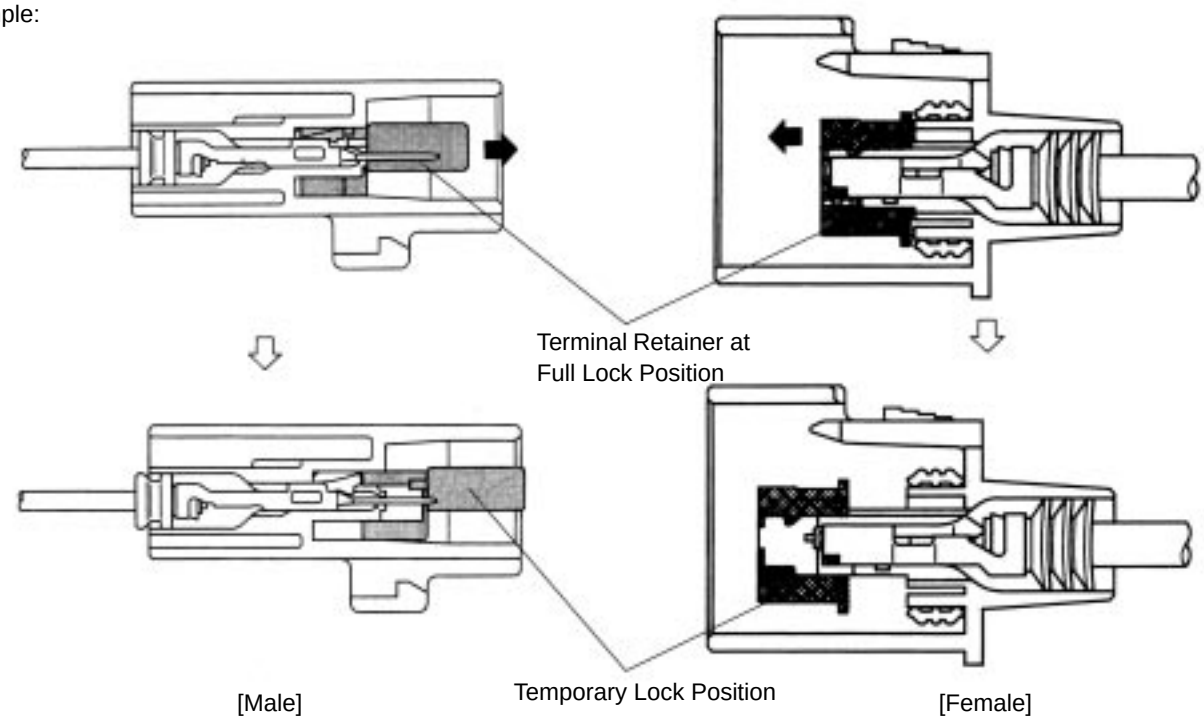

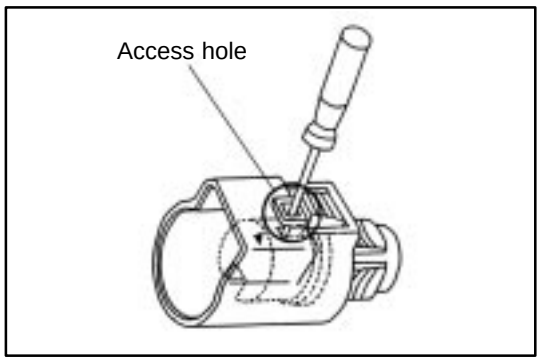

HINT: In some cases insert the special tool from the access hole on the flank of the housing.

[Case 2]

Type which cannot be pulled as far as Power Lock

HINT: There are few cases of this type of connector

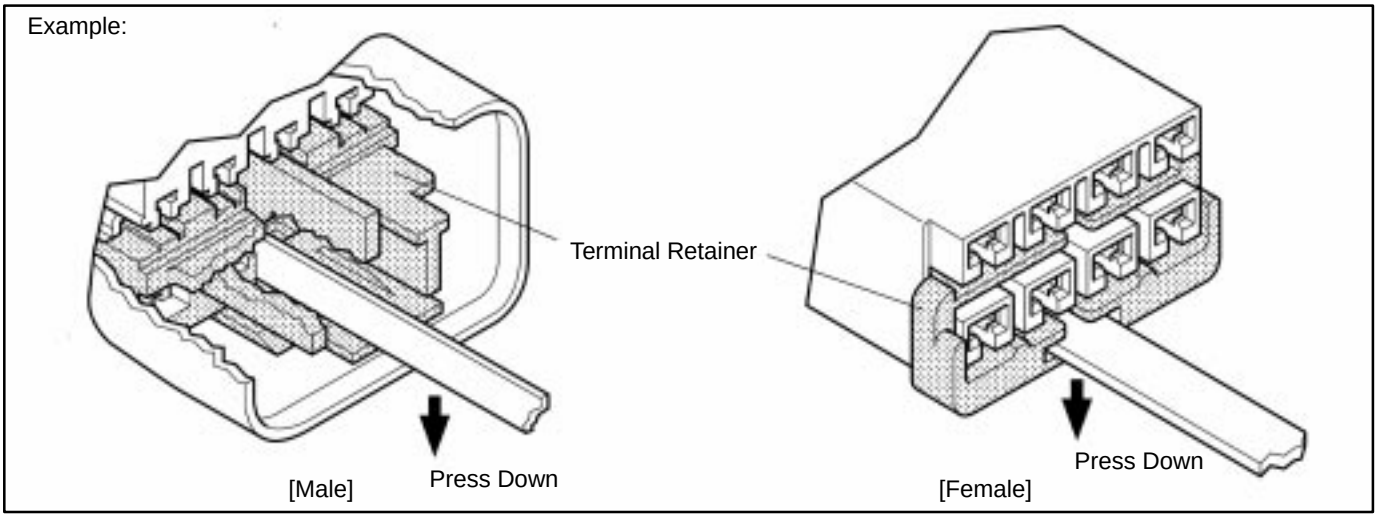

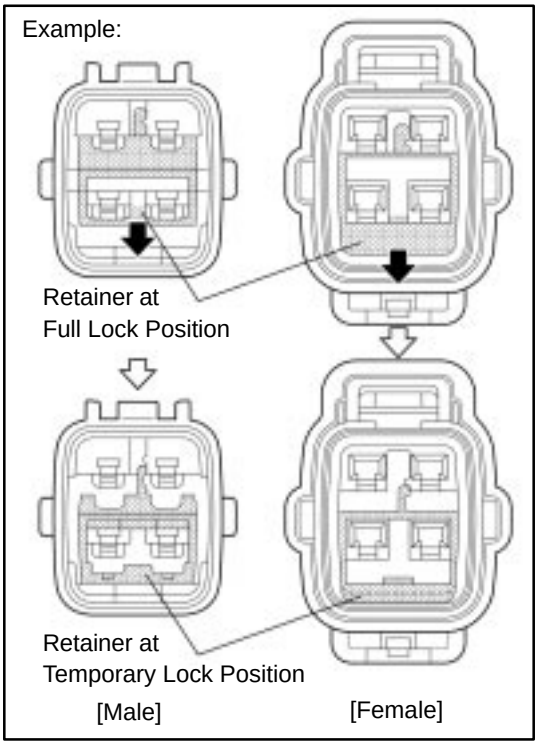

(1) Insert the tool straight into the access hole of terminal retainer as shown.

Push the terminal retainer down to the temporary lock position.

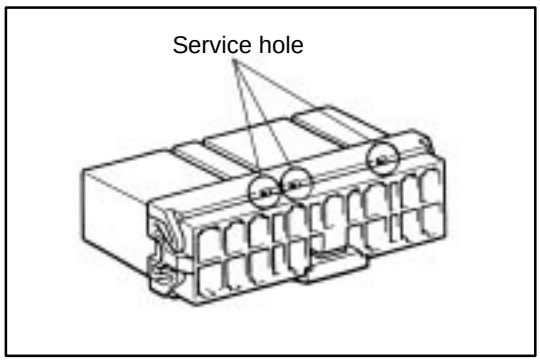

Type F (For C–Type Connector)

(1) Insert the special tool into the service hole.

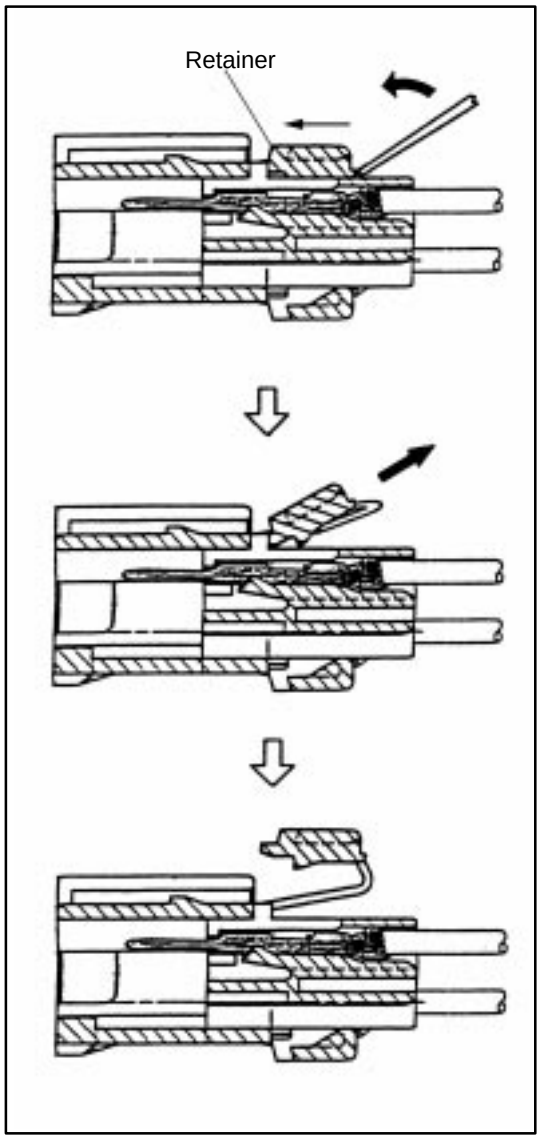

(2) Move the special tool to the direction of the arrow and release the lock.

HINT: Lift the retainer up after moving it to the direction of the thin arrow shown in the illustration.

(3) Pull the retainer forward by hand and remove the retainer from the housing.

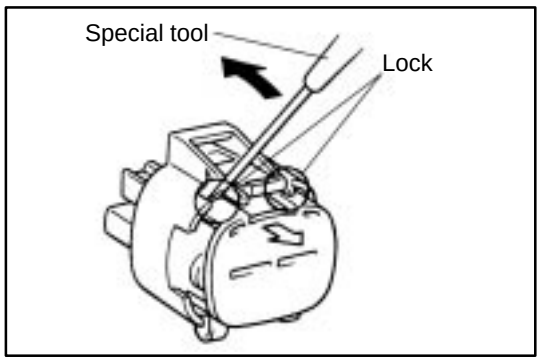

Type G

- Insert the special tool into the position shown in the illustration. Pry it to the direction of the arrow and push the lock up to release it.

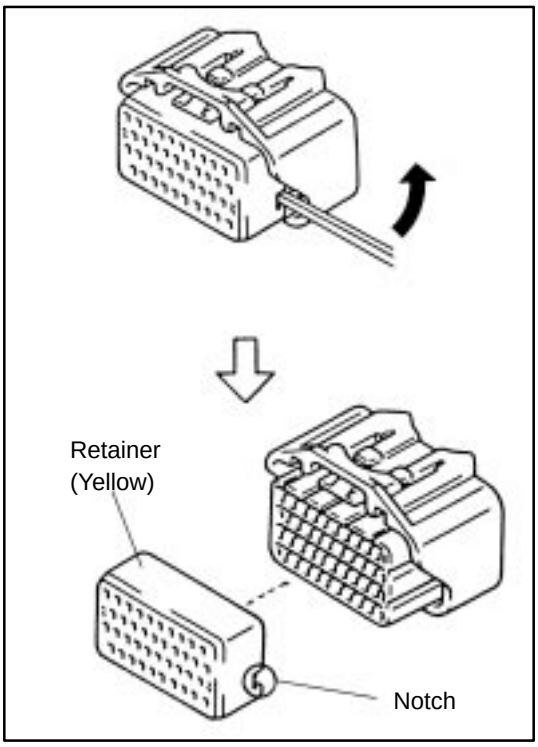

Type H (For 1.0II Type Connector)

(1) Move the special tool into the notch of the retainer to the direction of the arrow with the edge of the housing as the fulcrum. Then the pull the retainer out.

NOTICE:
Do not insert the special tool into areas except notches. (This may damage the seal ring that is attached behind the retainer.)

(2) As same as the procedure (1), pull the retainer straight out using hand after releasing the lock on the other side.

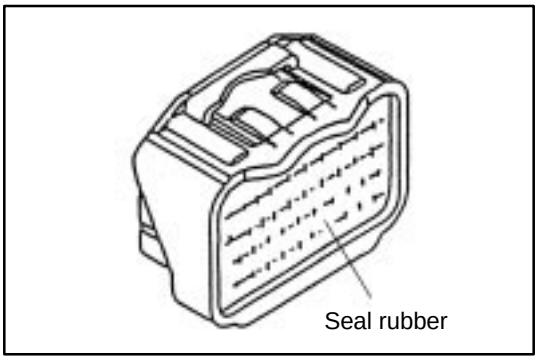

NOTICE:
- **Do not remove the seal rubber when pulling the terminal out.**
- **If the seal rubber is peeled off when puling the terminal out, press it down to stick it to the original condition.**
- **Be sure and not fit the connector when the retainer is not installed**.

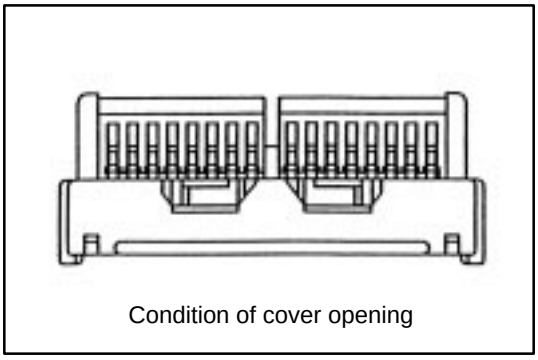

Type I (For SFPC Type Connector)

(1) Open the cover (white)

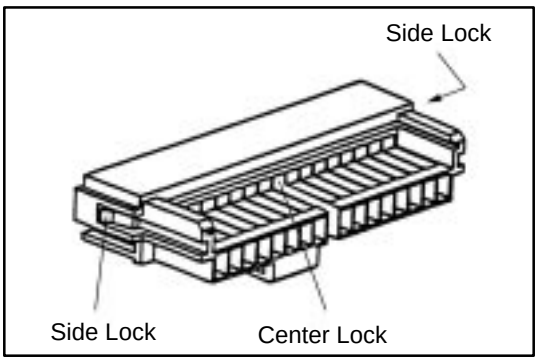

(2) Remove the side lock of the retainer. (One side)

(3) Remove the center lock of the housing.

(4) Remove the side lock of the retainer. (The other side)

NOTICE:
- **Following the above order is not required.**
- **No center lock on the housing with ten poles.**

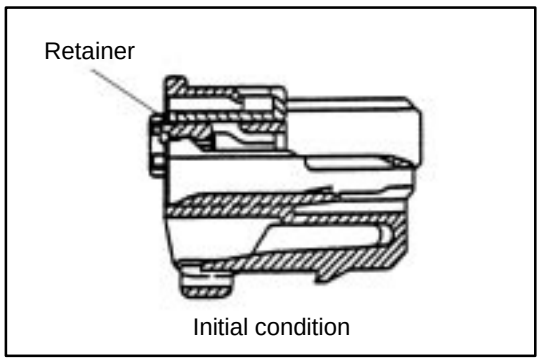

(5) Move the retainer until it becomes the initial condition.

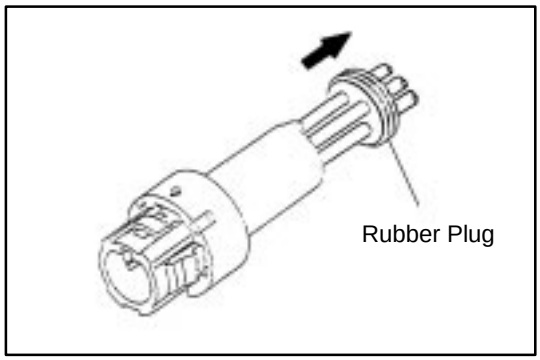

Type J

[Male]

(1) Remove the rubber plug.

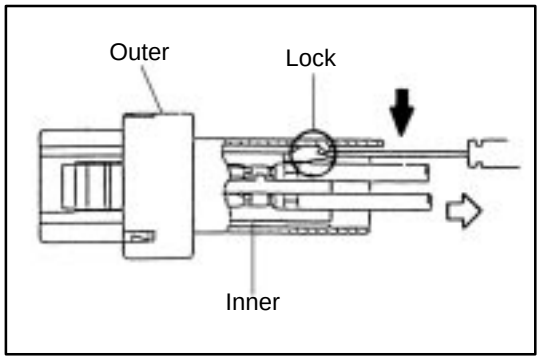

(2) Push the lock of the inner using the special tool.

(3) Pull the wire to the direction of the arrow pushing the lock up and remove the inner from the outer.

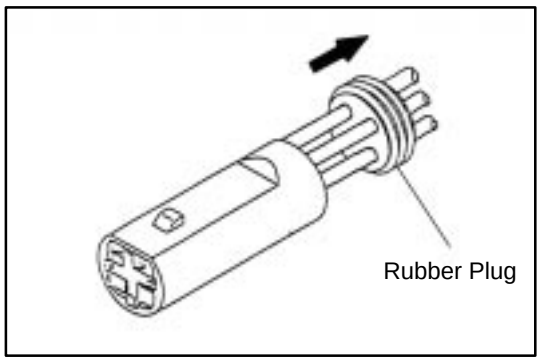

[Female]

(1) Remove the rubber plug.

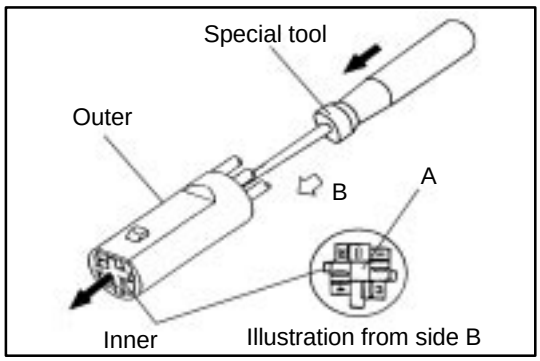

(2) Insert the special tool into the outer shown in the illustration. Then push the area A of the inner and remove the inner from the outer.

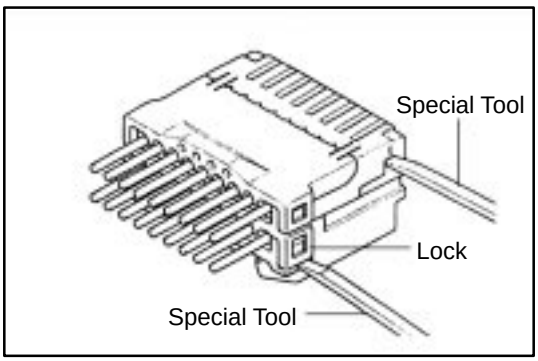

Type J (For Insulation Displacement Connector)

(1) Separate Connector

Using a special tool, release the lock and separate the connector into 2.

NOTICE:
Do not apply too muck force to the lock arm.

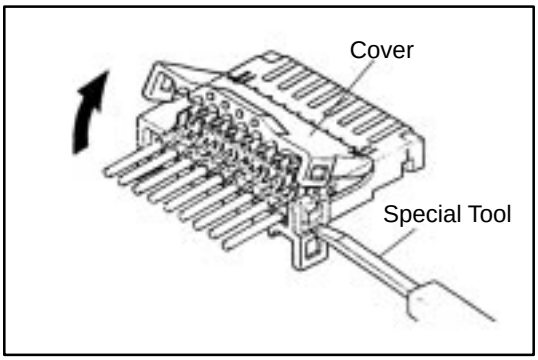

(2) w/ Cover : Open Connector Cover

Using a special tool, release the lock and open the cover.

NOTICE:
Do not apply too much force to the lock arm.

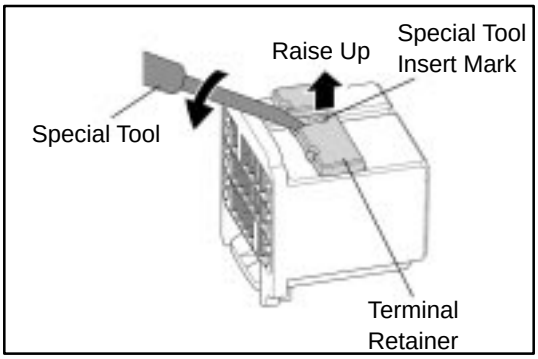

Type K (0.64 Type Connector)

(1) Using the special tool, raise the retainer up to the temporary lock position.

HINT: The needle insertion position varies according to the connector's shape (number of terminals, etc.), so check the position before inserting it.

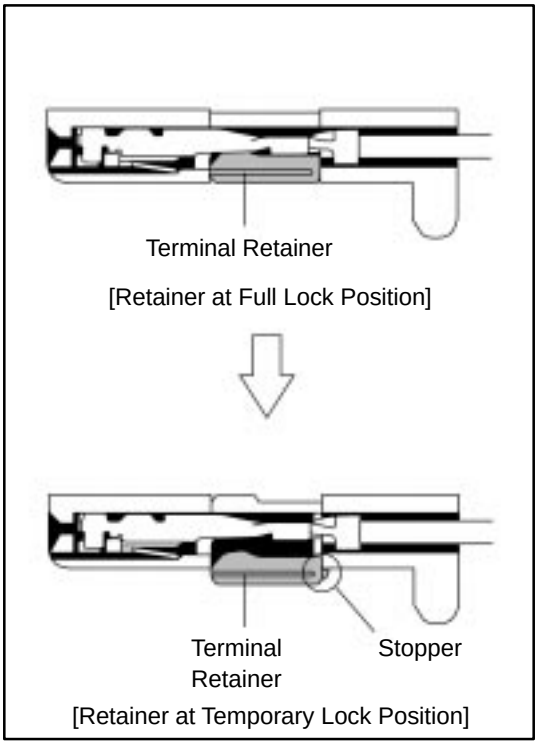

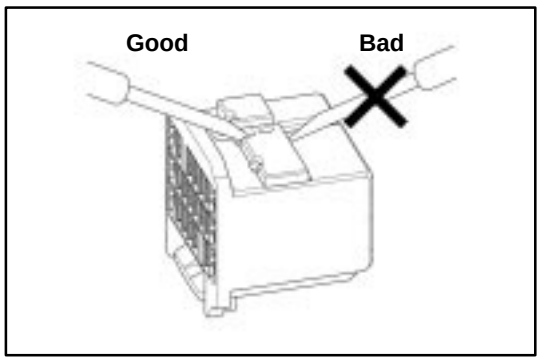

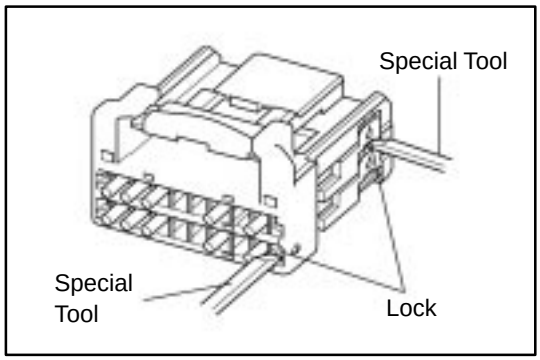

Type L (0.64 of Insulation Displacement Connector (IDC) Type)

(1) Remove the Lower Housing

Using a special tool, release the lock and remove the lower housing.

NOTICE:
- **Do not apply too much force to the lock arm.**
- **Mark the upper housing and lower housing to prevent mistakes when putting them together.**

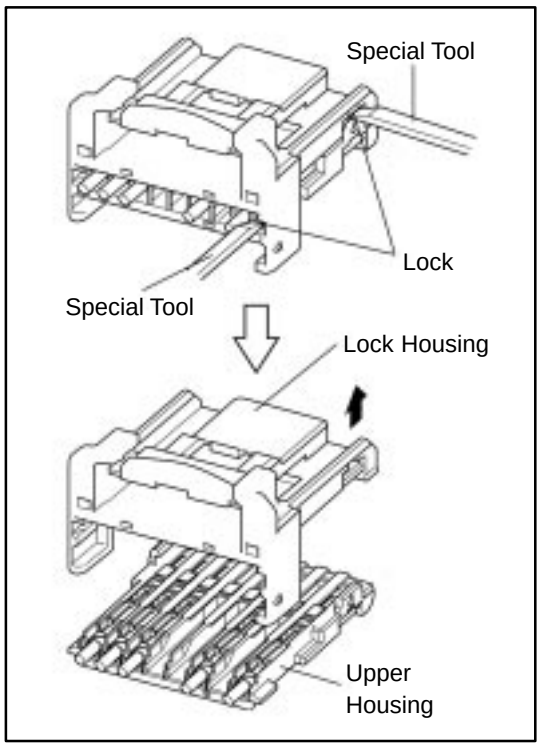

(2) Remove the Upper Housing

Using a special tool, release the lock and remove the upper housing from the lock housing.

NOTICE:
- **Do not apply too much force to the lock arm.**
- **Mark the upper housing and lower housing to prevent mistakes when putting them together.**

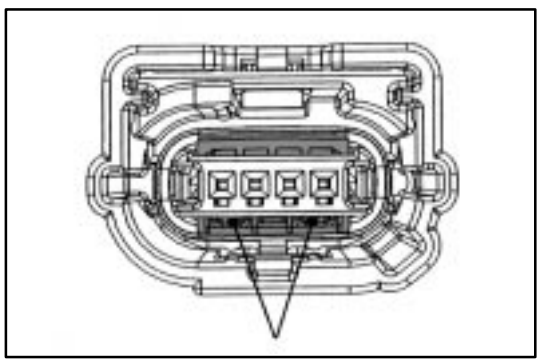

Type M (0.64 of Splash Proof Connector)

(1) Release Terminal retainer.
Insert Special Tool at the location shown in the figure left.

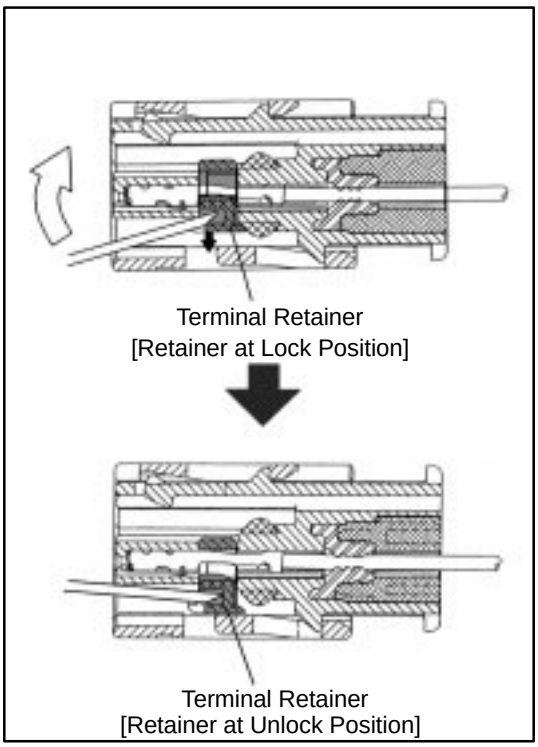

Move Special Tool in the direction of arrow.

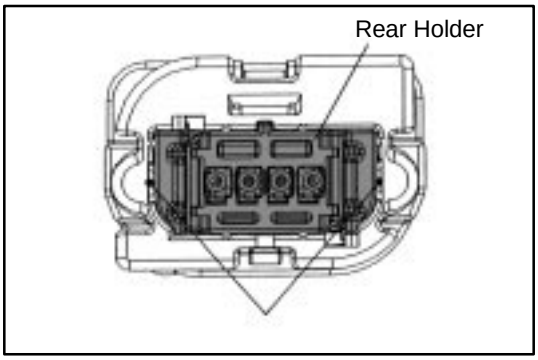

(2) Release Rear holder.
Insert Special Tool at the location shown in the figure left.

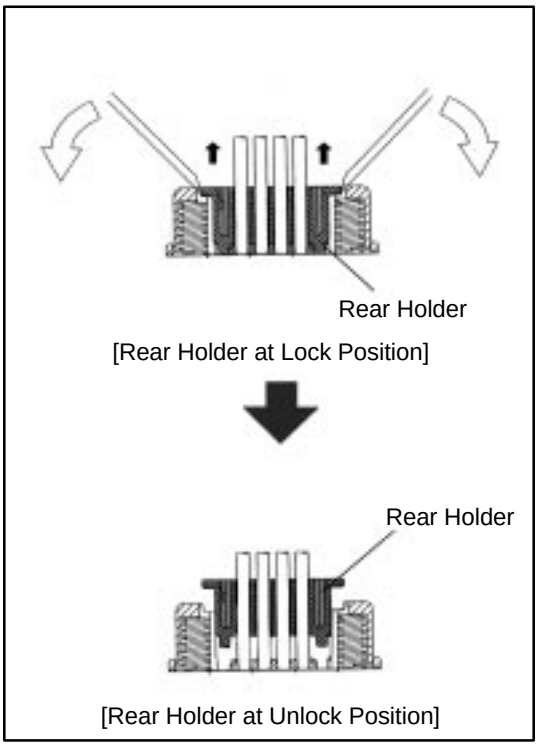

Move Special Tool in the direction of arrow.

NOTICE:

- **Do not remove Rear holder from Connector housing.**
- **If Rear holder completely comes off the housing, replace Connector with a new one.**

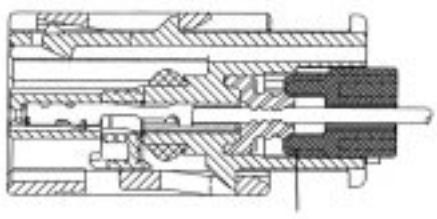

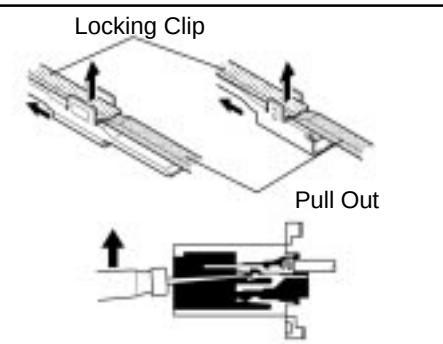

4. Disconnect Terminal from Connector

(a) Determine the primary locking system from the charts.
1. Lock Located on terminal
2. Lock Located on connector
3. Method of entry and operation

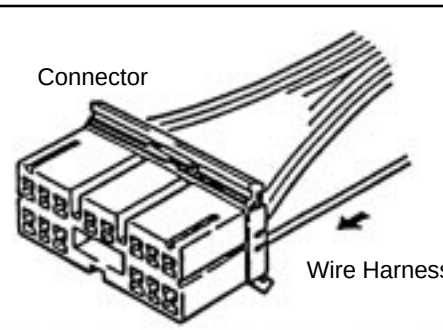

(b) Push the terminal gently into the connector and hold it in this position.

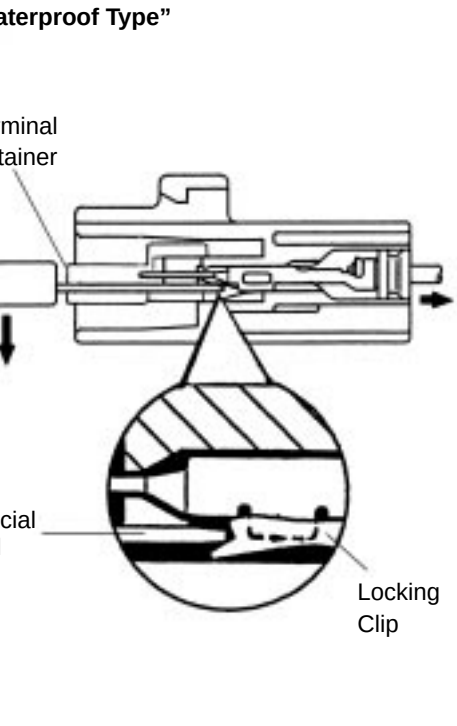

(c) Insert the special tool into the connector in the direction shown in the chart.

(d) Move the locking clip to the unlock position and hold it there.

NOTE: Do not apply excessive force to the terminal. Do not pry on the terminal with the special tool.

(e) Carefully withdraw the terminal from the connector by pulling the lead toward the rear of the connector.

NOTE: Do not use too much force. If the terminal does not come out easily, repeat steps (a) through (e).

”Non–Waterproof Type”

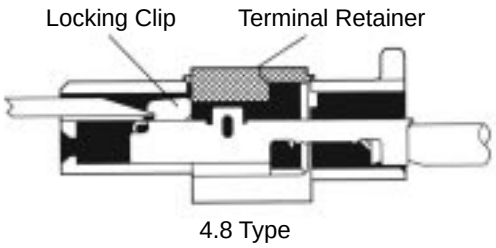

4.8 Type

0.64 Type

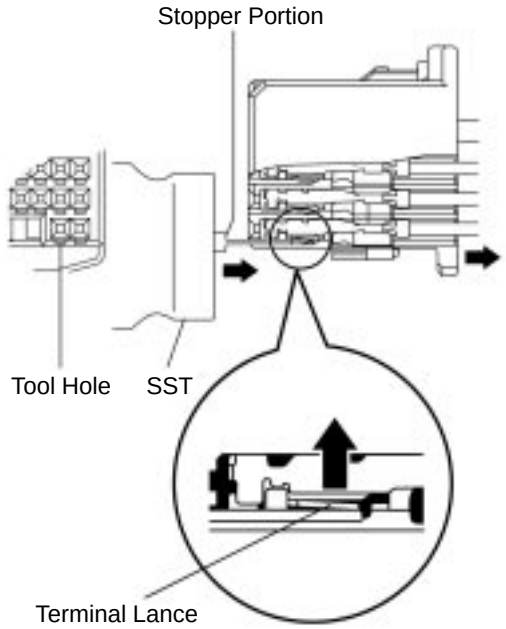

(f) Insert the SST into the connector in the direction shown in the chart.

(g) Insert the SST fully to the tool hole, and push the terminal lance.

NOTICE:

- **The terminal has a lance shape, therefore, the housing may be damaged and the terminal may get stuck if forcibly pried by wires etc.**
- **Insert the SST so that the stopper portion surface is facing up.**

(h) Carefully withdraw the terminal from the connector by pulling the lead toward the rear of the connector.

NOTICE:
Removal of the terminal from housing cavity will cause damage to the wire seal section, deteriorating waterproofing performance. Replace the connector with a new one.

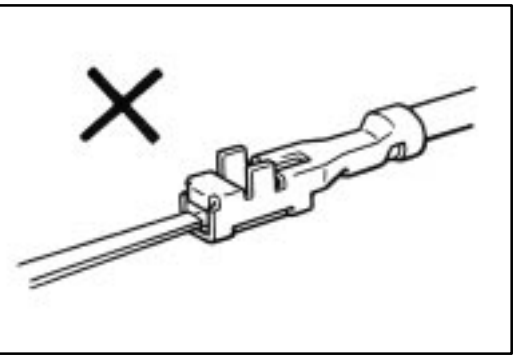

NOTICE:
Do not insert the special tool into the female terminal box. If you do so, replace the terminal with the new one whether the terminal is broken or not.

Non–waterproof type TLC housing

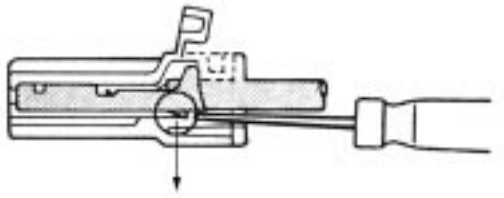

Insert the tool from wire harness side

NOTICE:
As for Non–waterproof type TLC housing, insert the special tool into the housing from wire harness side.

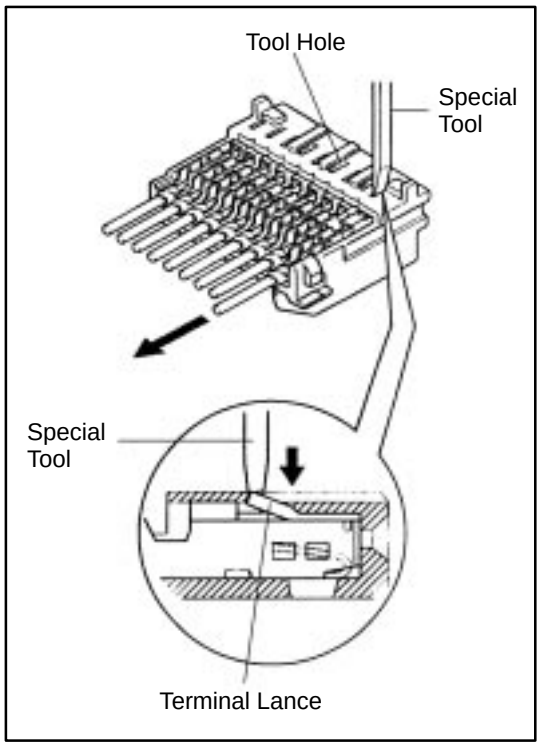

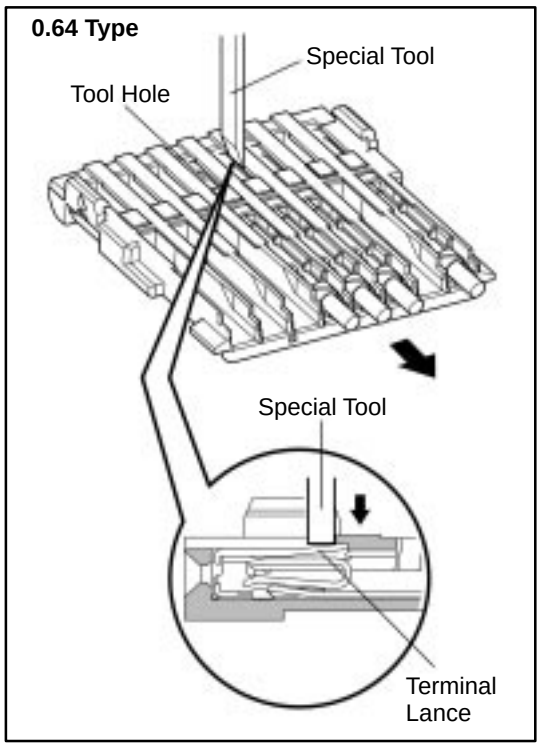

Insulation Displacement Connector Type

(a) Using a special tool, push the terminal lance from the tool hole.

(b) Carefully withdraw the terminal from the connector by pulling the lead toward the rear of the connector.

NOTICE:

- **Do not use too much force. If the terminal does not come out easily, repeat step (a).**
- **Always change the wire with the repair wire, in accordance with page B–27.**

Terminal Deformation

(1) Terminal Bending in Vertical Direction



1˚ or less



1˚ or less

(2) Terminal Bending in Horizontal Direction



3˚ or less

5. Inspect the terminal and the connector for damage.

NOTE:

- The locking clip is easily damaged.
- Do not reuse the damaged part.

Step 3. Replace the terminal.

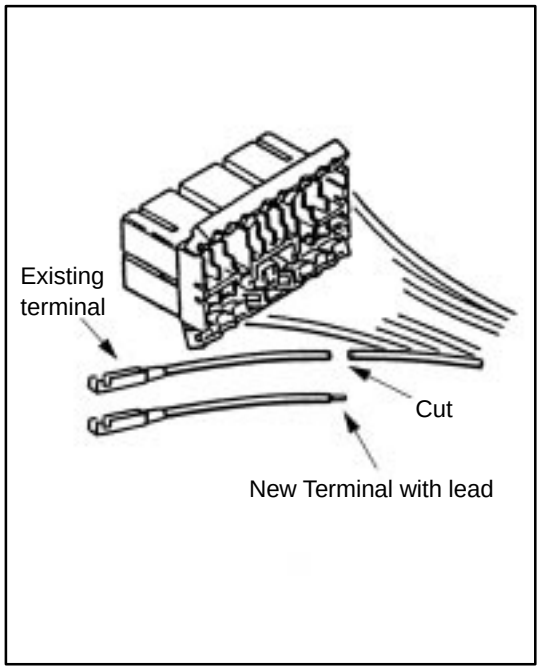

1. Cut the Old Terminal from the Harness.

(a) Use the new wire lead as a guide for proper length.

NOTE: If the length of wire removed is not approximately the same length as the new piece, the following problems may develop:

- Too short — tension on the terminal, splice, or the connector, causing and open circuit.
- Too long — excessive wire near the connector, may get pinched or abraded, causing a short circuit.

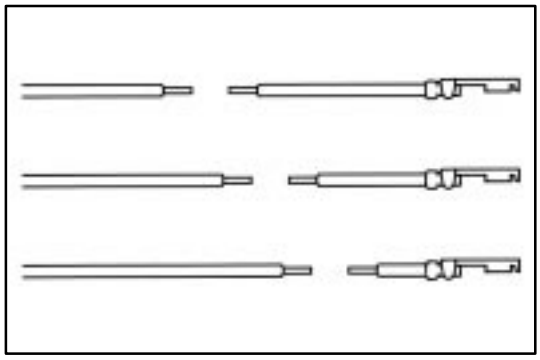

HINT: When connecting a wire harness at there or more spots to the same connector, cut the wire harness as shown on the left.

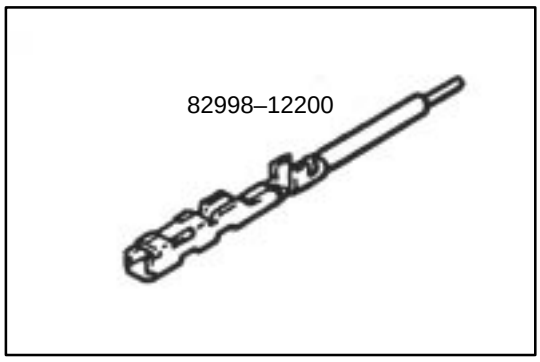

2. Select the correct replacement terminal with lead, from the supply parts.

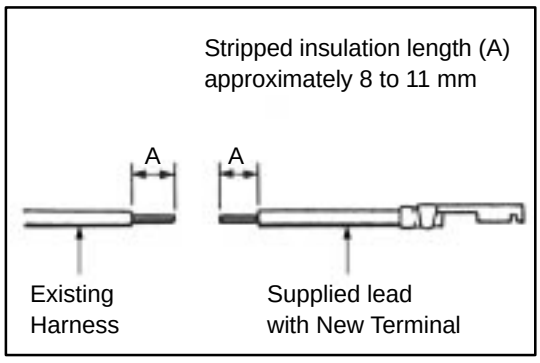

3. Strip insulation from wire on the harness and replacement terminal lead.

Start stripping at least 8 mm (0.31 in.) to 11 mm (0.43 in.) away from the end of the existing harness at vehicle side and also from the end of the repair wire.

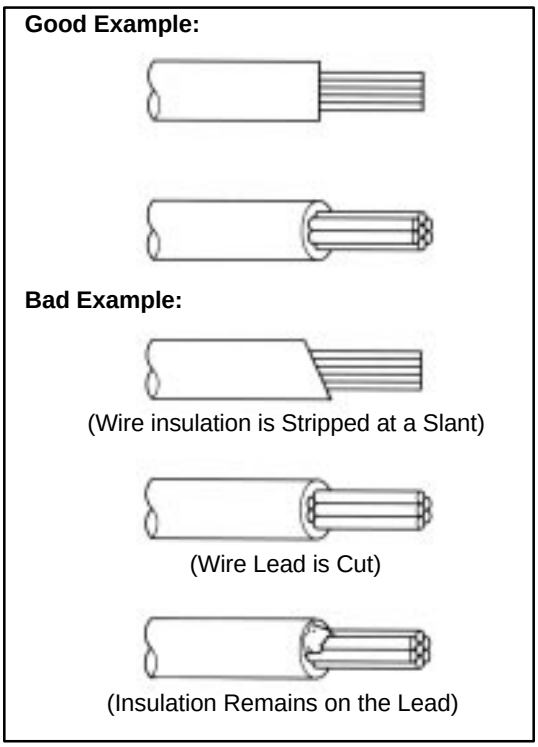

NOTICE:
Take care not to damage the wire when stripping the wire harness lead. After finishing the operation, visually inspect the wire. If there is any damage, perform the operation again.

HINT:
If the wire size is not known, start with largest stripper hole and work down until a clean strip of the insulation is removed without nicking or cutting the wire lead.

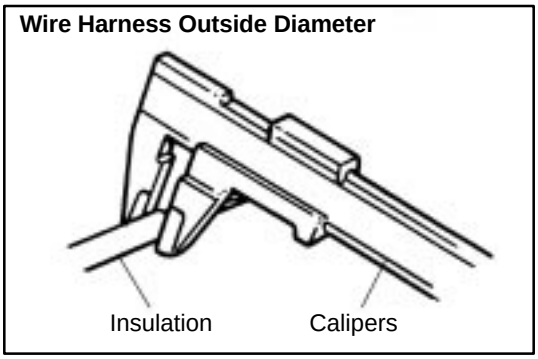

4. Select Correct Size of Sleeve from the Supply Parts.

(a) Measure the diameter of wire by using the measuring device as following:

- When size is based on the outside diameter of the wire harness

  Measure the outside diameter of the wire harness by placing a measuring device, such as a micrometer or Vernier Caliper, across the diameter of the insulation on the lead and taking a reading.

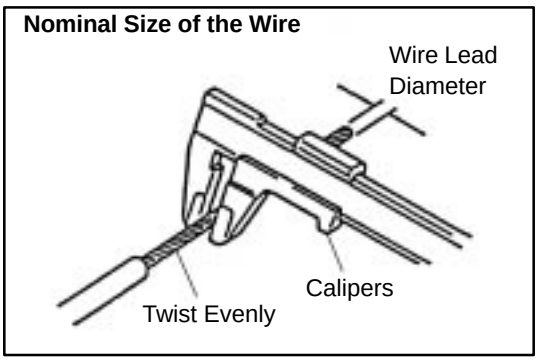

- When size is based on the nominal size of the wire lead.

  Measure the diameter of the wire lead by placing a measuring device, such as a micrometer or Vernier Caliper, across the diameter of the wire lead and taking a reading.

HINT:
To calculate the ”nominal size” of wire

$$\text{Nominal size} = \frac{3.14 \times (\text{Diameter of wire lead})^2}{4}$$

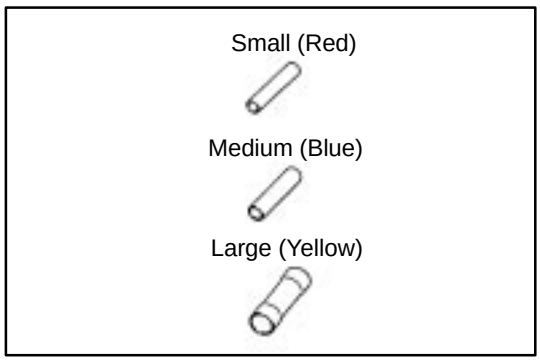

(b) Use the table to determine proper sleeve size

	Part Number	Nominal size of wire (Outside Diameter of wire)
Small	82999–12010	0.3 or less (1.0 – 0.2 mm)
Medium	82999–12020	0.5 – 1.25 (2.0 – 1.0 mm)
Large	82999–12030	2 or more (5.0 – 3.0 mm)

NOTE: For details, refer to sleeve size table on item 4 of STEP 1

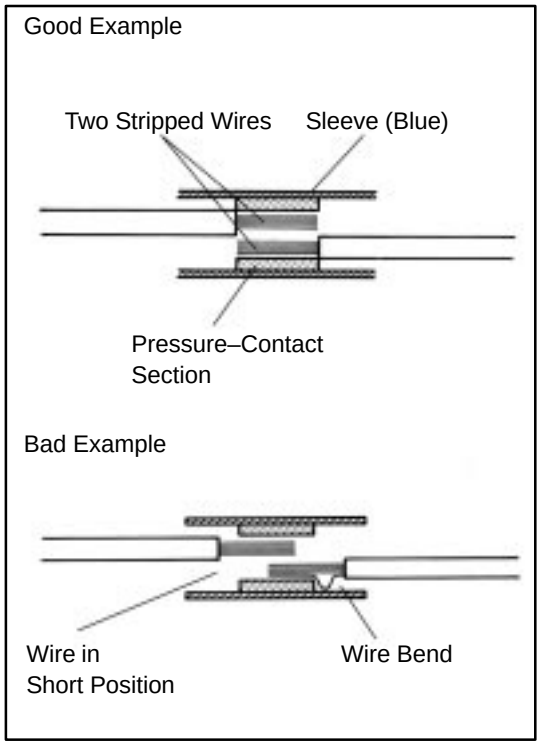

5. Crimp the Replacement Terminal Lead to the Harness Lead.

(a) Overlap the two stripped wire ends inside the sleeve as illustrated on the left.

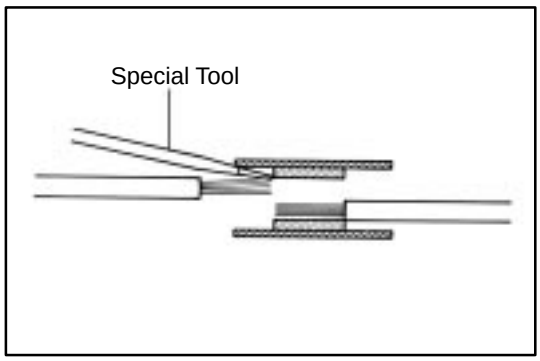

HINT: You might find it easier if you use a miniature special tool as a guide as you insert wires into the sleeve.

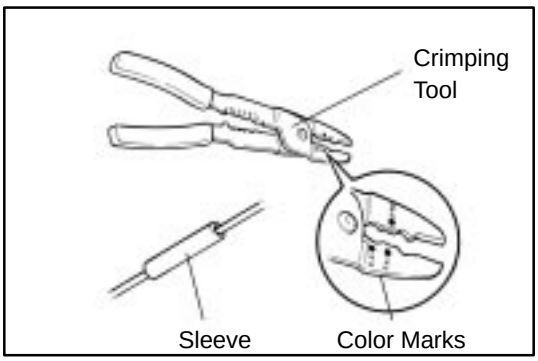

(b) The crimping tool (AMP Part No. 169060) has color marks on it. Place the sleeve in the correct section of the tool according to the color of the sleeve itself.

HINT: For the crimping tool, AMP ”Part No. 169060” is convenient to use.

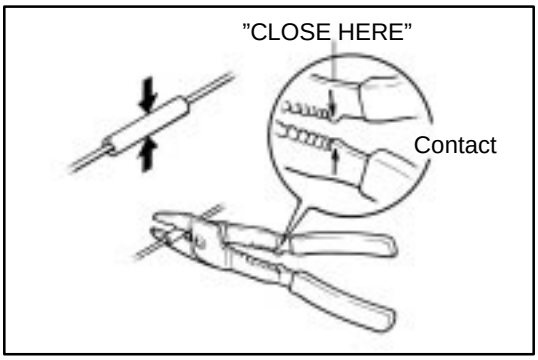

(c) With the center of the sleeve correctly placed between the crimping jaws, squeeze the crimping tool until either end comes into contact at the section marked by ”CLOSE HERE”.

HINT: Check to see that the sleeve and wires are still in the correct position before closing the crimping tool ends with steady pressure.

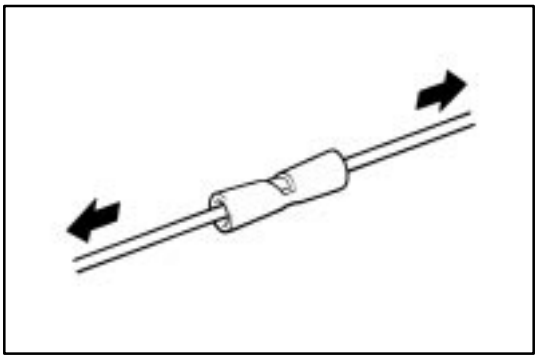

(d) Pull the joined wires to either end. Make sure that they are joined firmly by the sleeve.

NOTICE:
If the joined wires come loose the splice is defective, so replace the sleeve and repeat the procedure.

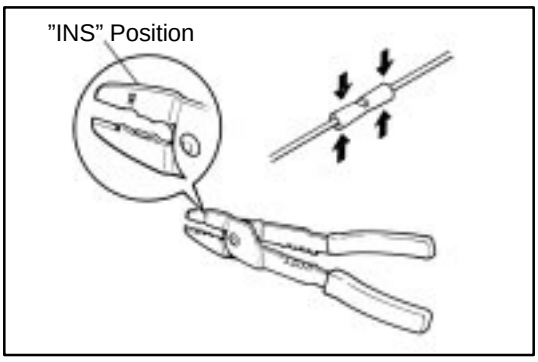

(e) Crimp both ends of the sleeve with the crimping tool at the ”INS” position.

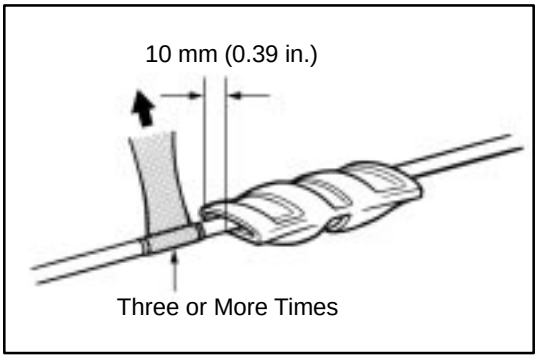

6. Protect Joined Section

Wrap silicon tape around the joins to protect them from moisture.

NOTE: This job is required in repairs of the engine compartment, under the floor and other moisture entry positions.

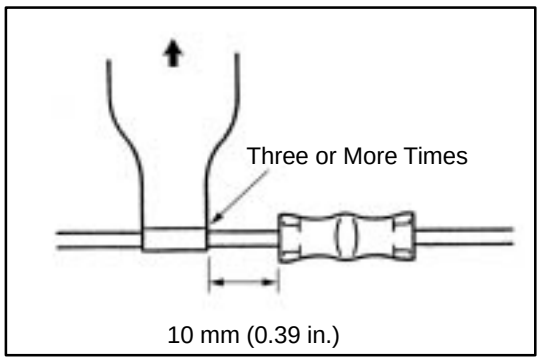

HINT:

- Before starting the operation, thoroughly wipe dirt and grease off the sections to be joined.
- If the adhesive surfaces of two tapes come in contact they will stick together and will not come apart, so do not remove the backing film except when using the tape.
- Do not let oil and dust, etc. get on the tape surface.

(a) Ready about 100 mm (3.94 in.) of silicon tape (Part No. 08231–00045) and peel off the film.

(b) Stretch the silicon tape until its width is reduced by half.

(c) About 10 mm (0.39 in.) from the end of the sleeve, wrap the silicon tape around the sleeve three or more times while stretching the tape.

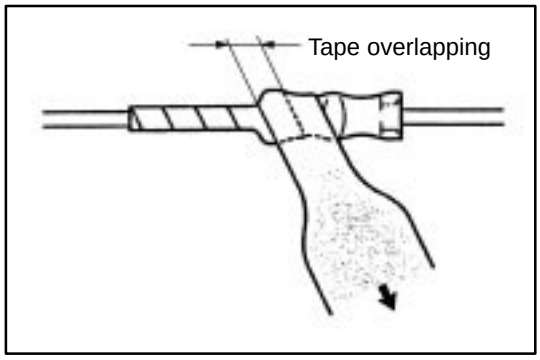

(d) Wrap the remaining part of the sleeve with half of the tape overlapping at each turn.

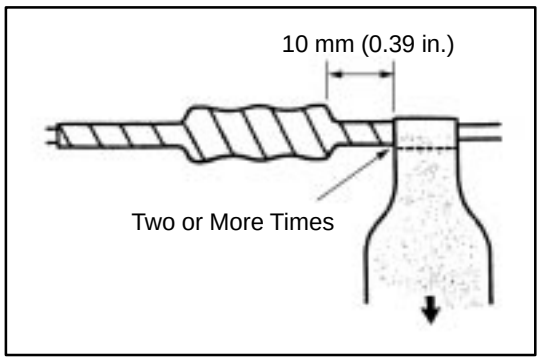

(e) Firmly wrap the tape two times or more about 10 mm (0.39 in.) from the other end of the sleeve, then wrap the tape back towards the start again and firmly finish winding the tape around the center of the sleeve.

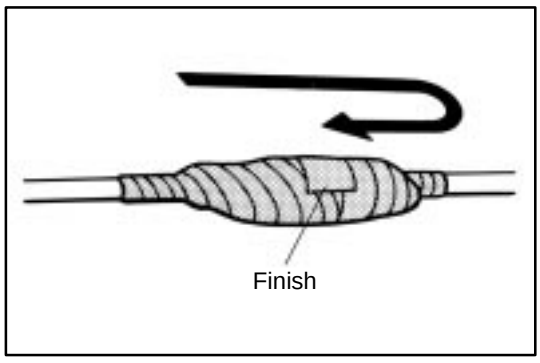

Step 4. Install the terminal into the connector.

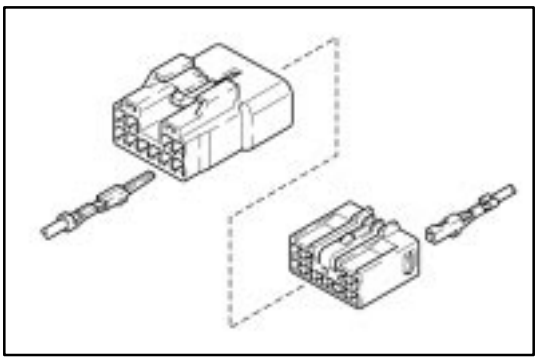

HINT:

(a) Make sure the terminal is positioned correctly.

(b) Insert the terminal until the locking clip locks firmly.

(c) Insert the terminal with terminal retainer in the temporary lock position, if equipped.

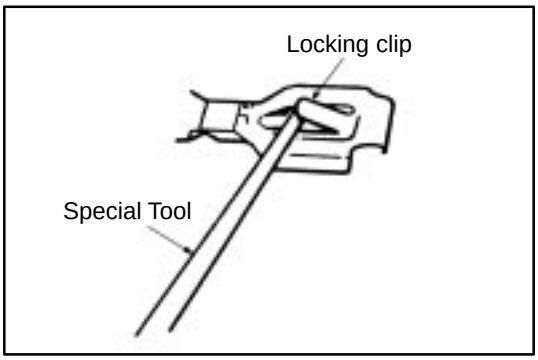

NOTE: If reusing a terminal, check that the locking clip is still in good condition and in the proper position.

(a) If it is on the terminal and not in the proper position, use the special tool to gently bend the locking clip back to the original shape.

(b) Check that the other parts of the terminal are in their original shape.

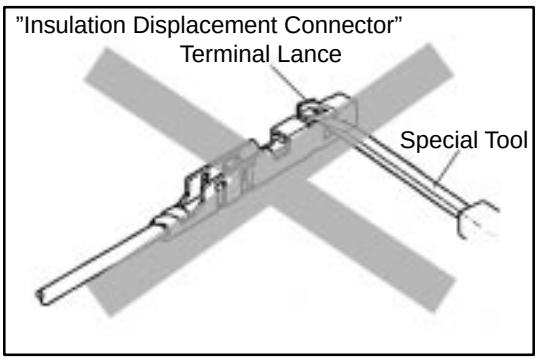

NOTICE:
Do not readjust or reuse the terminal lance of the insulation displacement connector type terminal. Always change the wire with the repair wire.

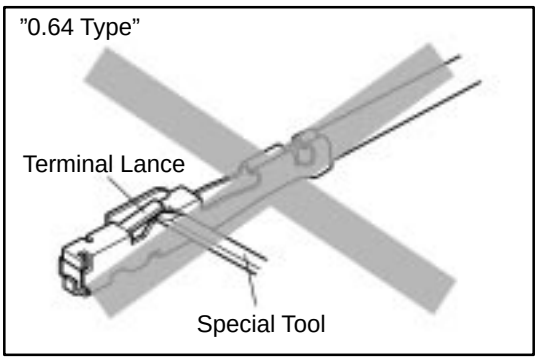

NOTICE:
As for 0.64 type terminal, do not adjust the terminal lance with the special tool.

Splash Proof Type Connector

NOTICE:

- **Removal of the terminal from housing cavity will cause damage to rubber plug material (the wire seal), deteriorating waterproofing performance. Be sure to replace the housing with a new one.**
- **Check the withdrawn terminal for the following if trying to use it again.**
  - **It is free of deformation and damage**
  - **It is free of adherents such as rubber plug material (wire seal)**
  - **Replace any deformed terminal.**

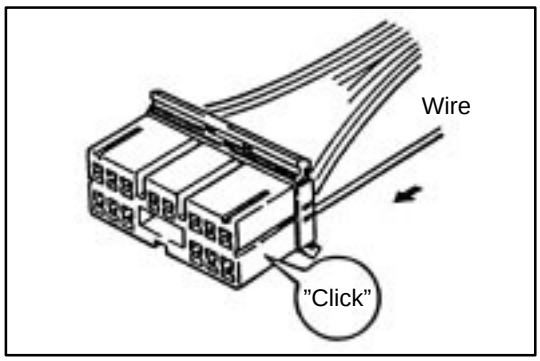

1. Push the Terminal into the Connector until you hear a ”click”.

NOTE: Not all terminals will give and audible ”click”.

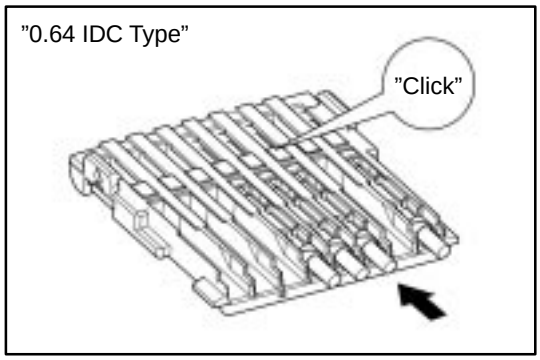

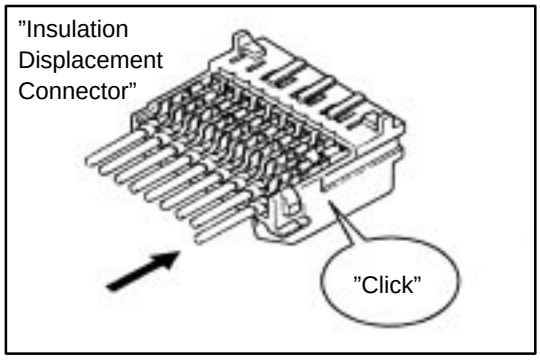

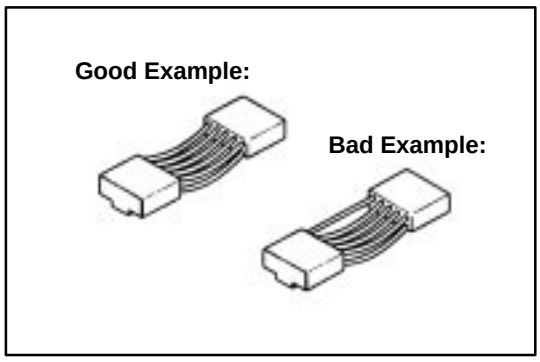

NOTICE:

- **After repairing, never let only one harness stretch.**
- **In cese that it becomes short, do over again using the repair wire.**

2. Double Locking Type Connector (with terminal retainer or double locking device)

The connector is fitted with a terminal retainer, or a double locking device, it is in the temporary lock position at insert the terminal.

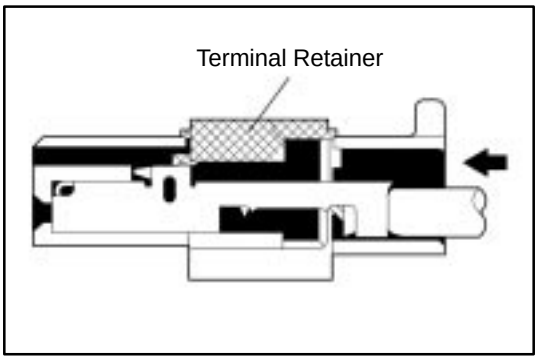

Type A (For 1.0, 1.0II, 1.3, 1.8, 2.3II 4.8 and 8.0 of Non–Waterproof Type Connector)

(a) Insert the terminal.

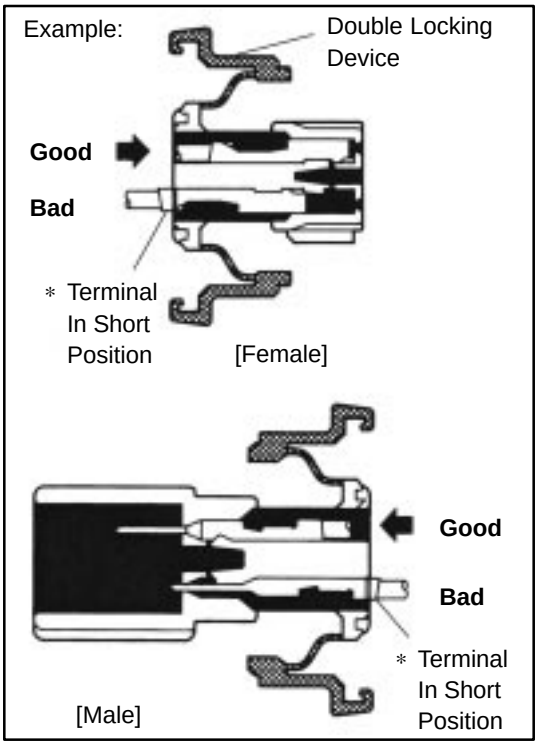

HINT:

1. Make sure the terminal is positioned correctly.
2. Insert the terminal with terminal retainer in the temporary lock position.

(b) Insert the terminal until the locking clip locks firmly.

HINT:

1. Pull the terminal back gently to check whether it is locked correctly.
2. If it cannot be inserted easily, check the terminal and the connector for damage.

NOTE: If the terminal to locking clip does not lock firmly, the double locking device cannot lock or terminal retainer does not lock at full lock position so the terminal backs out from connector.

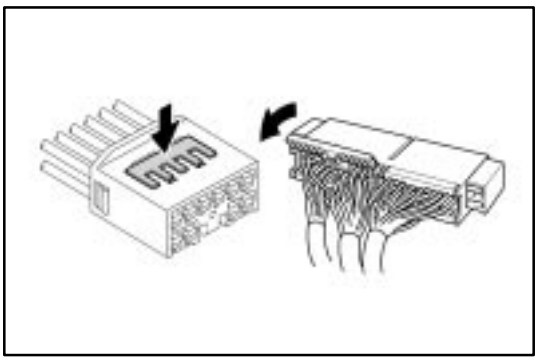

(c) Close terminal retainer or double locking device.

The connector is fitted with a terminal retainer, or a double locking device, return it to the full lock position.

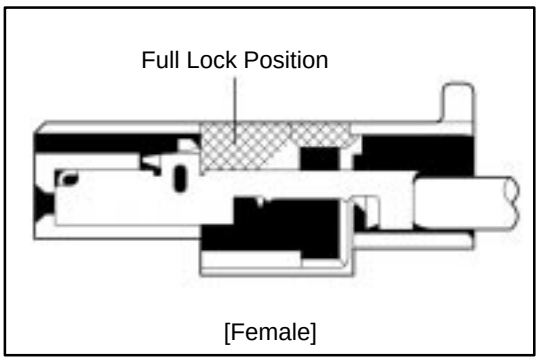

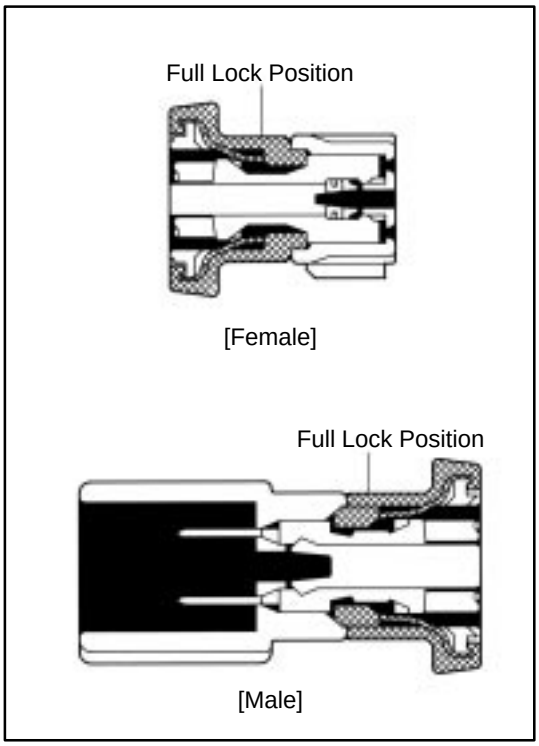

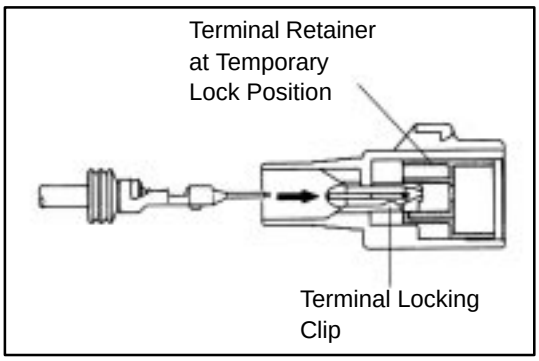

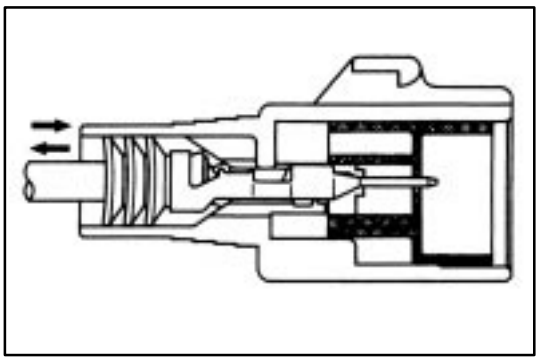

Type B (For 1.8, 2.3, 2.3II, 4.8, 6.3 and 8.0 of Waterproof Type)

(For Male Connector)

(a) Insert the terminal.

HINT:

1. Make sure the terminal is positioned correctly.
2. Insert the terminal with terminal retainer in the temporary lock position.

(b) Insert the terminal until the locking clip locks firmly.

HINT:

1. Pull the terminal back gently to check whether it is locked correctly.
2. If it cannot be inserted easily, check the terminal and the connector for damage.

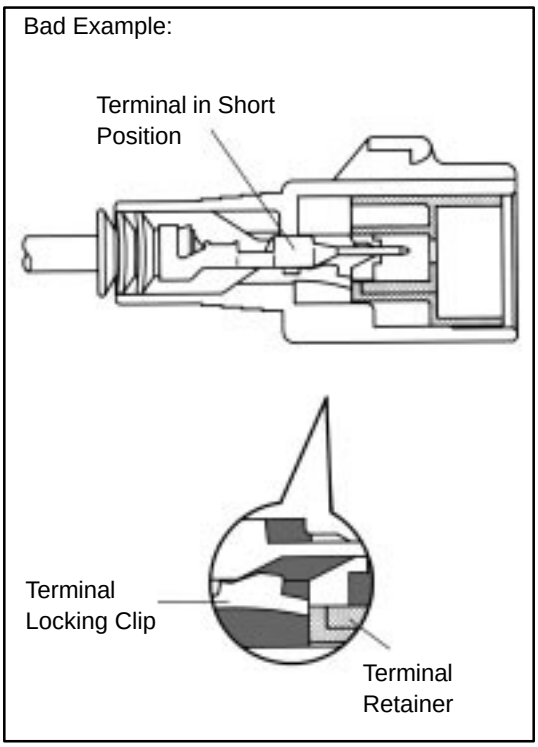

NOTE: If the terminal to locking clip does not lock firmly, terminal retainer can not lock at full lock position so the terminal backs out from connector.

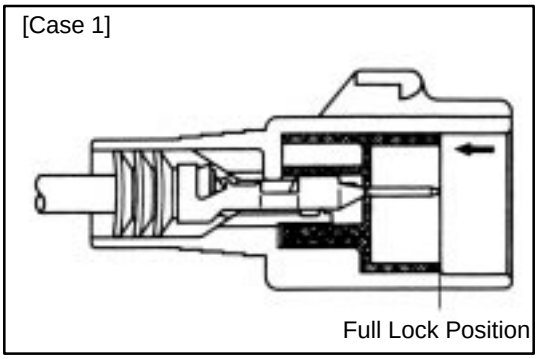

(c) ”For Case 1”
Push the terminal retainer in to the full lock position.

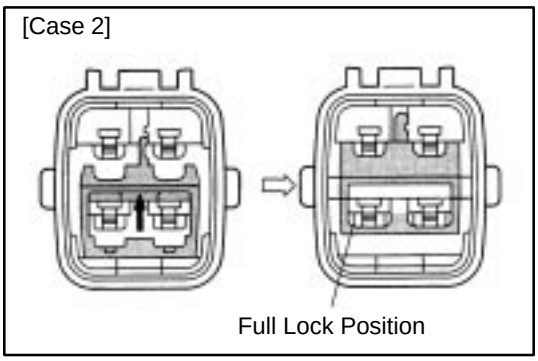

”For Case 2”
Raise the terminal retainer up to the full lock position.

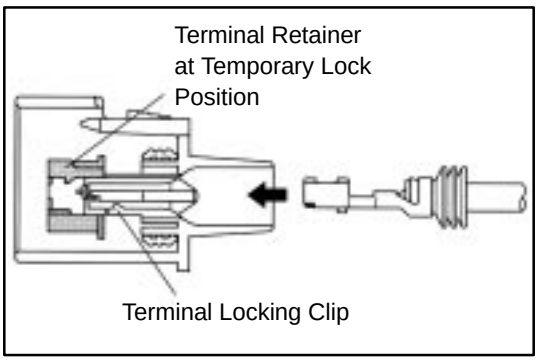

(For Female Connector)

(a) Insert the terminal.

HINT:

1. Make sure the terminal is positioned correctly.
2. Insert the terminal with terminal retainer in the temporary lock position.

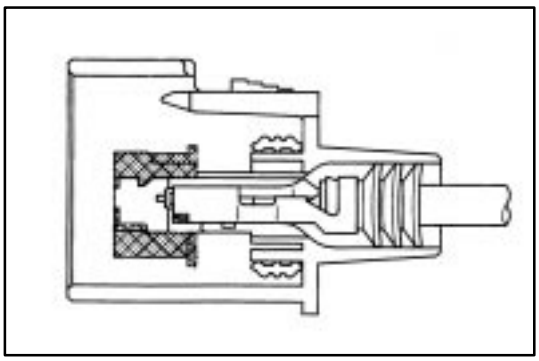

(b) Insert the terminal until the locking clip locks firmly.

HINT:

1. Pull the terminal back gently to check whether it is locked correctly.
2. If it cannot be inserted easily, check the terminal and the connector for damage.

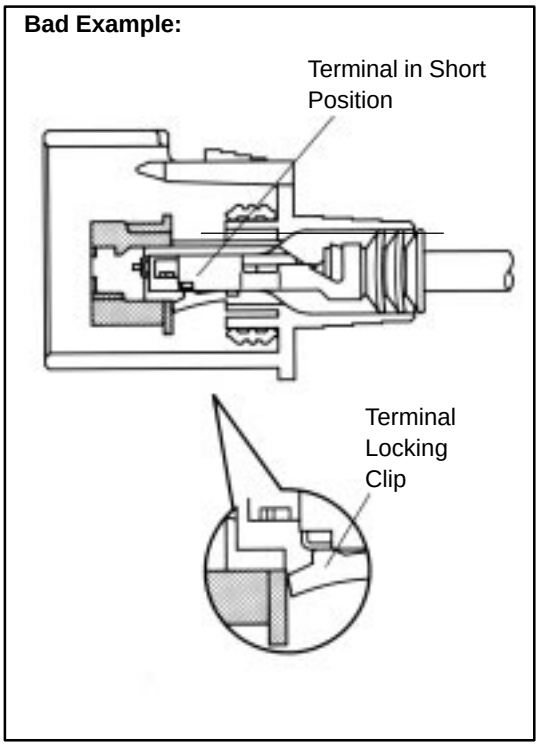

NOTE: If the terminal to locking clip does not lock firmly, terminal retainer can not lock at full lock position so the terminal backs out from connector.

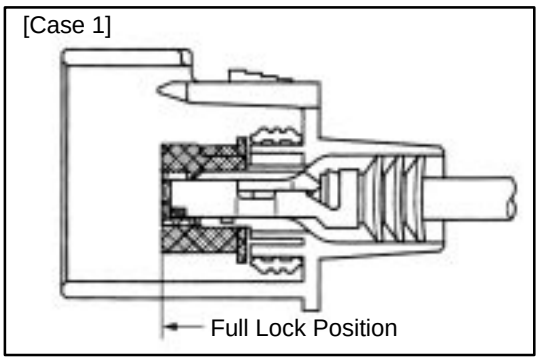

(c) ”For Case 1”
Push the terminal retainer in to the full lock position.

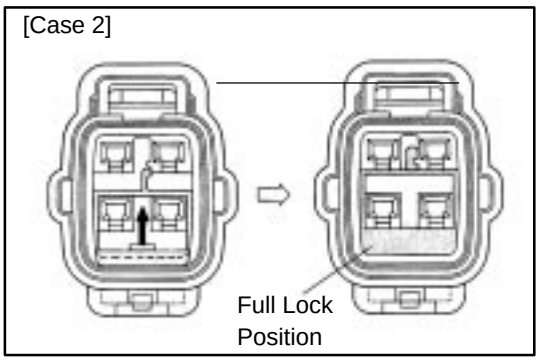

”For Case 2”
Raise the terminal retainer up to the full lock position.

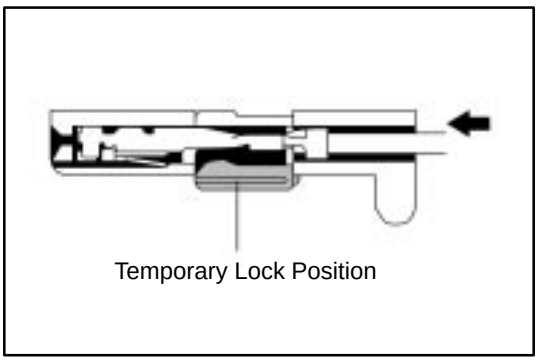

Type C (For 0.64 Type Connector)

(a) Insert the terminal.

HINT:

1. Make sure the terminal is positioned correctly.
2. Insert the terminal with terminal retainer in the temporary lock position.

(b) Insert the terminal until the terminal lance locks firmly.

HINT:

1. Pull the terminal back gently to check whether it is locked correctly.
2. If it cannot be inserted easily, check the terminal and the connector for damage.

NOTE: If the terminal to terminal lance does not lock firmly, the double locking device cannot lock or terminal retainer does not lock at full lock position so the terminal backs out from connector.

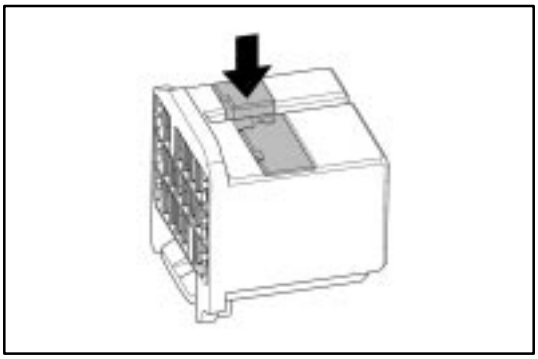

(c) Close terminal retainer.

The connector is fitted with a terminal retainer, return it to the full lock position.

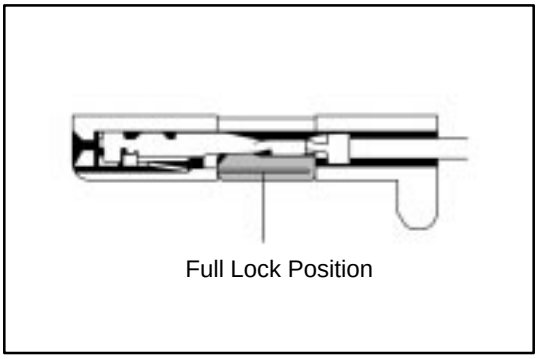

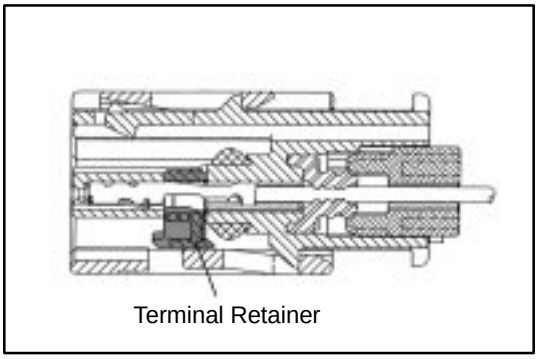

Type D (For 0.64 Splash Proof Type Connector)

(a) Verify that the terminal retainer is at unlocked position.

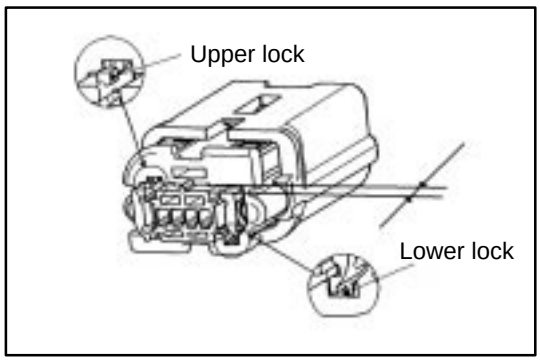

(b) Verify that Rear Holder is at unlocked position.

NOTICE:
If Rear holder or wire seal has been removed, replace it with new one.

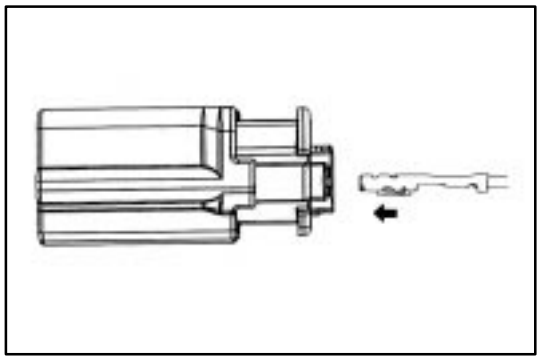

(c) Insert the terminal fully into the housing until it is locked.

HINT: The terminal has a longer insertion stroke than conventional ones.

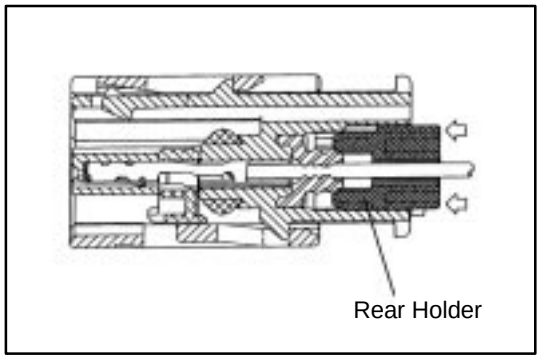

(d) Set Rear holder to locked position.
Push Rear holder in the direction of arrow until it is locked.

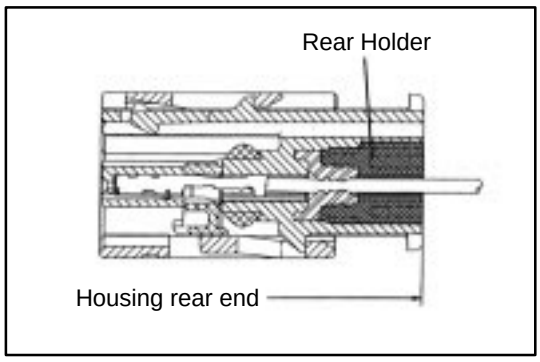

(e) Verify that Rear holder is at the specified position.
The rear end of Rear holder is flush with the rear end of Housing.

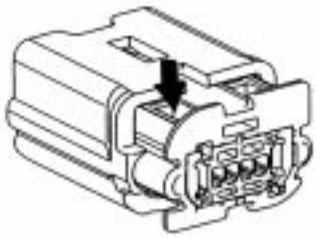

Lock check position, upper

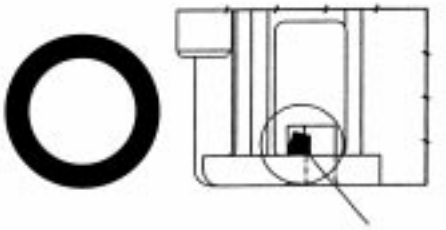

Lock normal engagement position

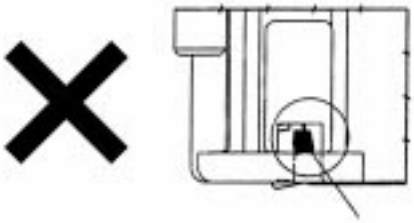

Incomplete lock engagement

Verify that the lock (upper side) is at the specified position under locked status.

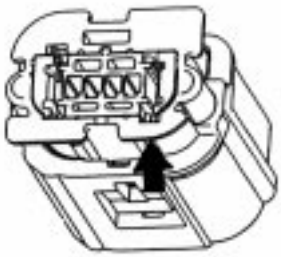

Lock check position, lower

Lock normal engagement position

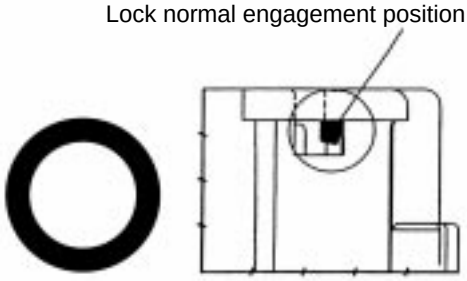

Incomplete lock engagement

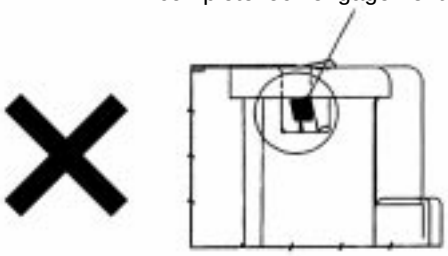

Verify that the lock (lower side) is at the specified position under the locked status.

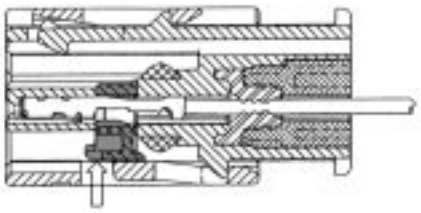

Insert Special Tool

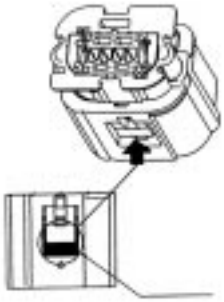

Special Tool hole (U shaped)

(f) Set Terminal retainer to Lock position.
Insert Special tool into the hole specified in the left and push Terminal retainer.

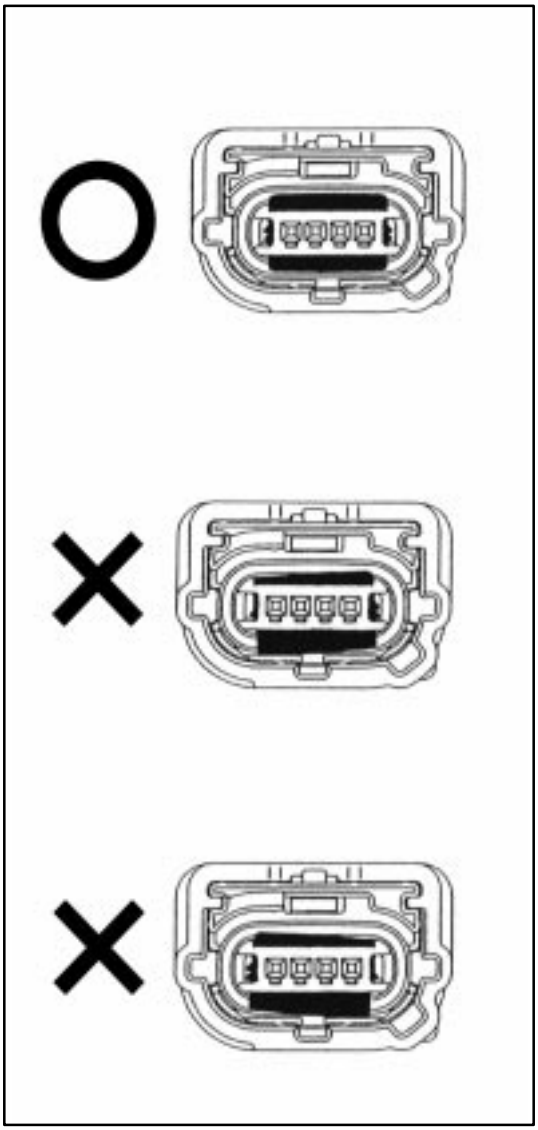

(g) Verify that Terminal retainer is inserted to the specified position.

NOTICE:
If Terminal retainer is stopped at its middle of insertion, holding wire, push Terminal to help it for full insertion.

SPECIAL EXAMPLE

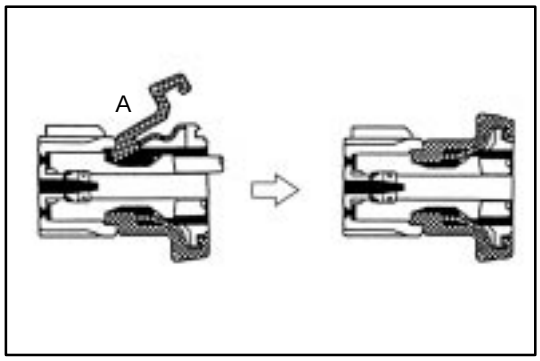

- First fit the section A.

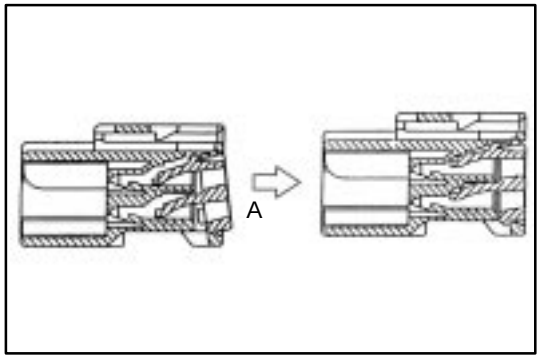

- Install the lock of the section A first.

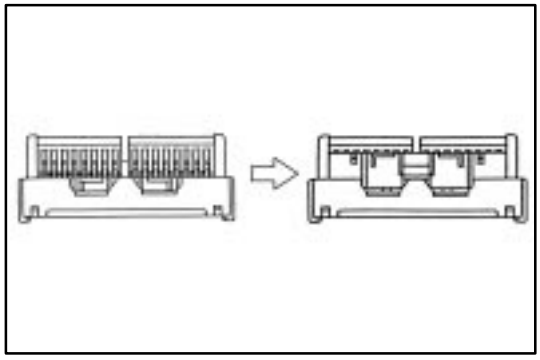

- Install the lock of the retainer and pull the white cover until you hear a click sound.

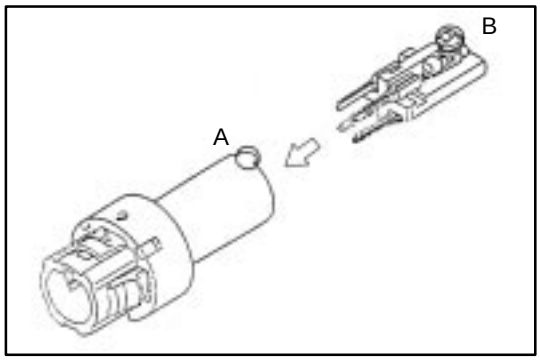

- Install the convex part (A) of the outer part correctly to the section B of the inner part.

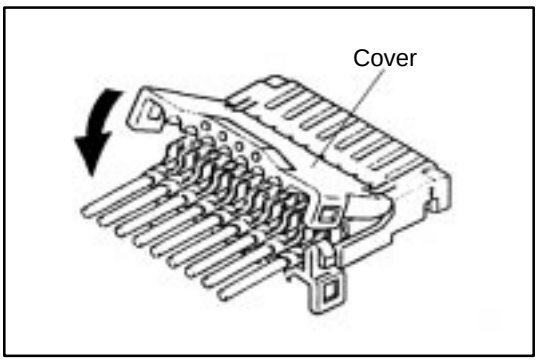

Insulation Displacement Connector

w/ Cover : CLOSE COVER

NOTICE:
Securely lock it

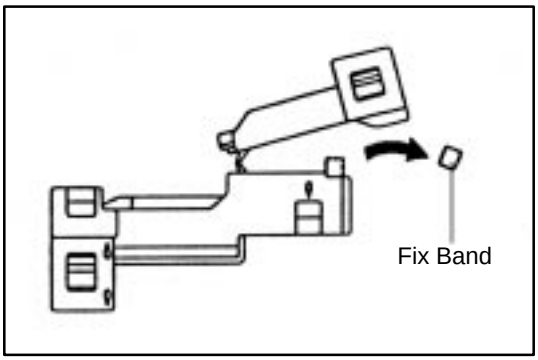

HINT:
When replacing it to a new connector, cut off the fixing band without leaving it.

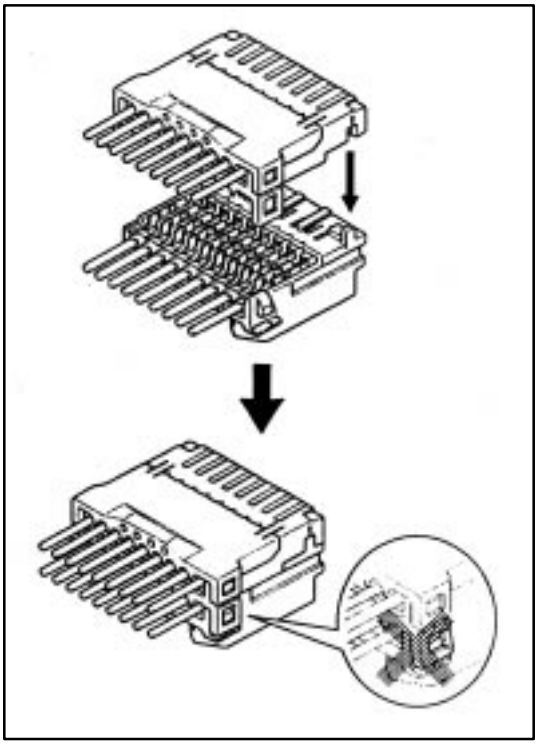

UNITE CONNECTOR

Make the projection of the front lock of the upper housing meet the ditch of the front lock of the lower housing and fix the rear lock.

NOTICE:

- **After uniting, securely lock it for not leaving the rear lock arm deformed.**
- **Make sure that the terminals will not become loose by pulling the wires lightly.**

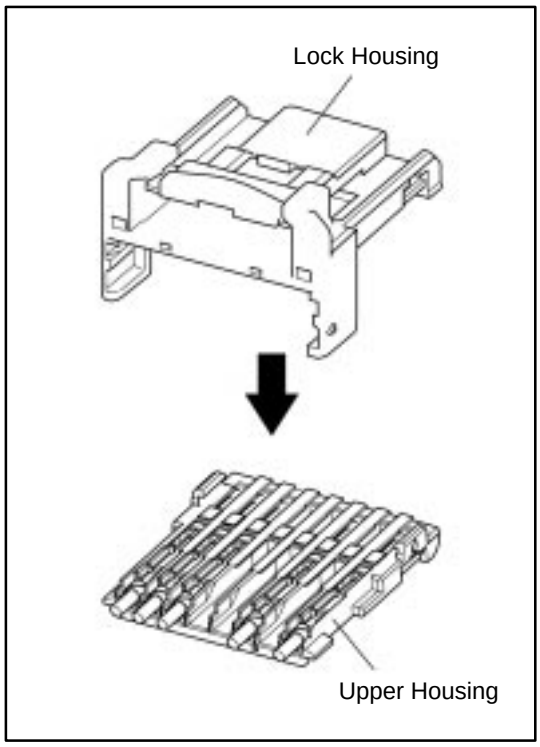

Insulation Displacement Connector (0.64 Type)

(a) Install the upper housing to the lock housing.

NOTICE:
- **Securely Lock it.**
- **Be careful not to mistake the upper housing and lower housing when putting together.**

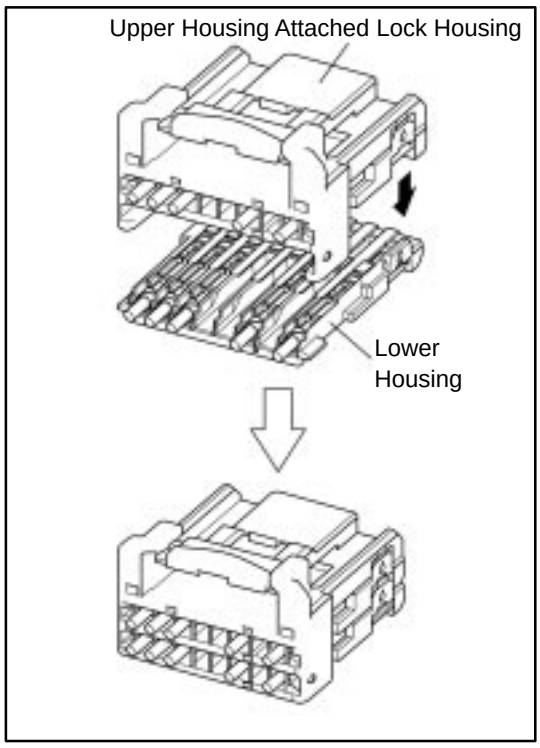

(b) Make the projection of the front lock of the upper housing attached lock housing meet the ditch of the front lock of the lower housing and fix the rear lock.

NOTICE:
- **Afteruniting, securely lock it for not leaving the rear lock arm deformed.**
- **Make sure that the terminals will not become loose by pulling the wires lightily.**
- **Be careful not to mistake the upper housing and lower housing when putting together.**

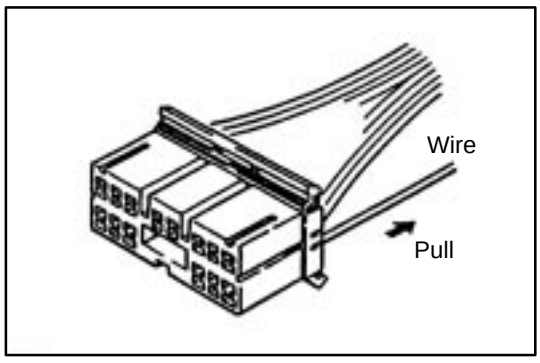

3. When properly installed, pulling gently on the wire lead will prove the terminal is locked in the connector.

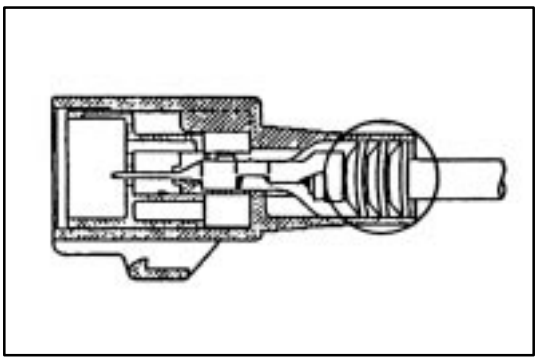

NOTICE:
If you working on the waterproof type, make sure that a rubber plug or a terminal gasket is inserted into the housing securely.

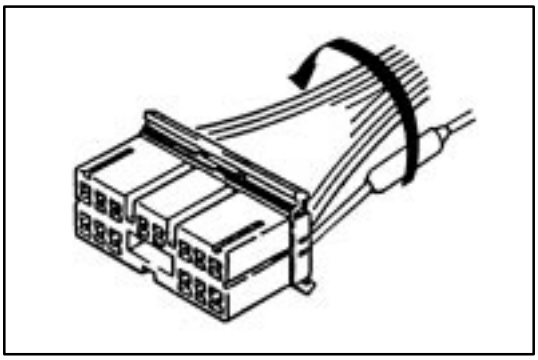

4. Secure the Repaired Wire to the Harness

If the wire is not in the conduit, or secured by other means, wrap vinyl tape around the bundle to keep it together with the other wires.

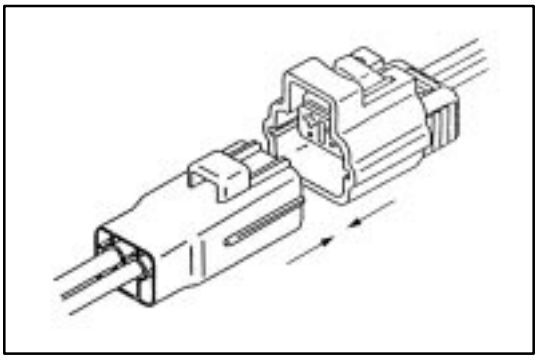

5. Connect Connector

- Fit the male connector to the female terminal.

NOTICE:
- **Do not twist the connector when fitting.**
- **Insert it until fully locked.**

HOW TO INSTALL AND REMOVE SPECIAL CONNECTORS

Low Fit and Lever Type Connector

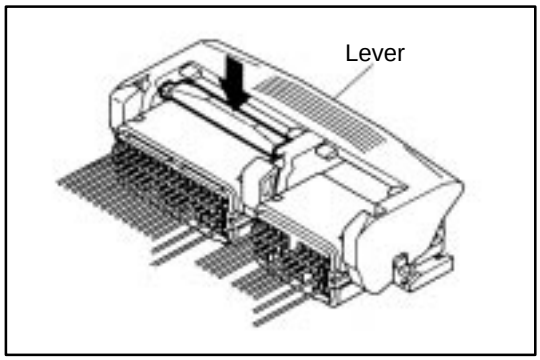

[Case 1]

1. Cut the connection of the connector

(1) Push the place indicated by the arrow.

(2) The lock is released and lever is lifted up.

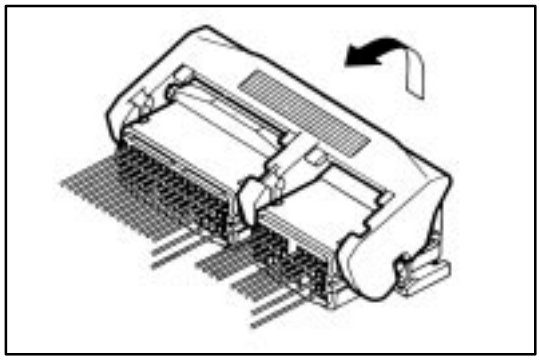

(3) Lift the lever up until it stops.

an

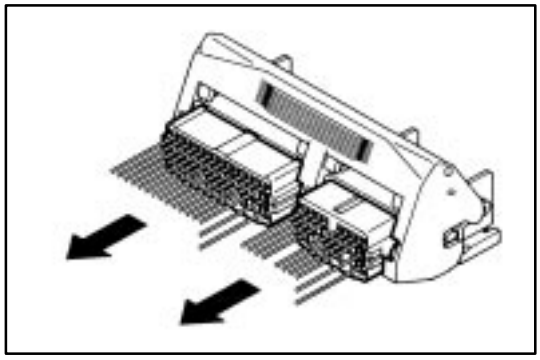

(4) Cut the connection of the connector.

NOTICE:
Do not hold the wire harness to pull it.

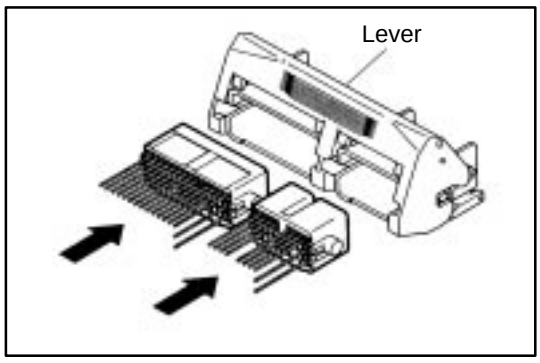

2. Connect the connector

(1) Connect the connector in the condition that the lever is fully lifted up.

HINT: If the lever is locked at the lower position, follow the procedure [Case 1]. (1) to (3) and lift the lever up fully.

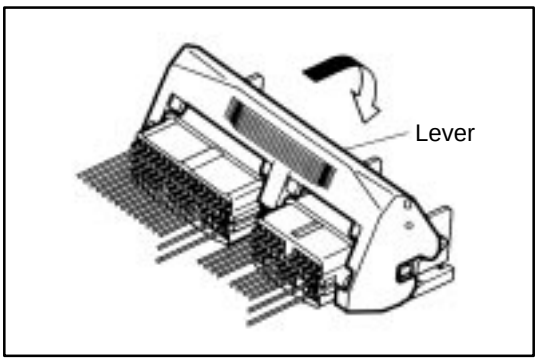

(2) Hold the connector to prevent it from slip off and push it down until you hear a click to lock it.

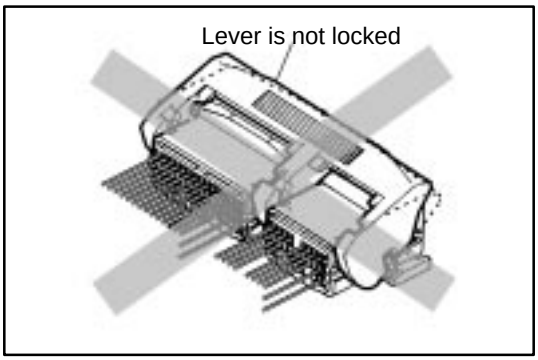

(3) Confirm that the lever is securely locked.

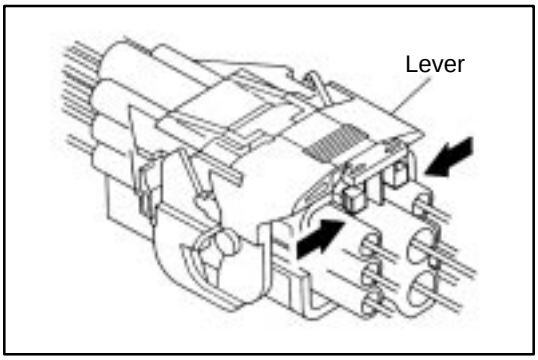

[Case 2]

1. Cut the connection of the connector

(1) Hold the area indicated by the arrow in the illustration

(2) The lock is released and the lever is lifted up.

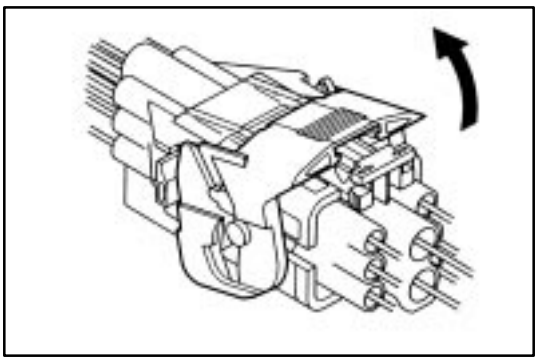

(3) Lift the lever up fully.

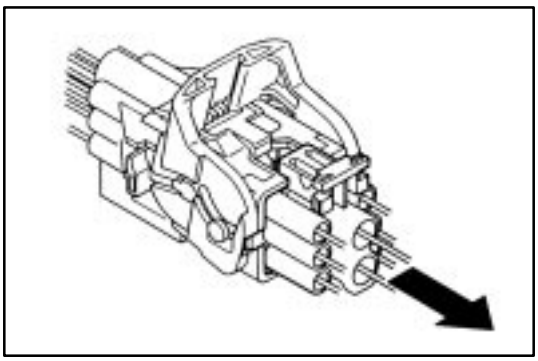

(4) Cut the connection of the connector.

NOTICE:
Do not hold the wire harness to pull it.

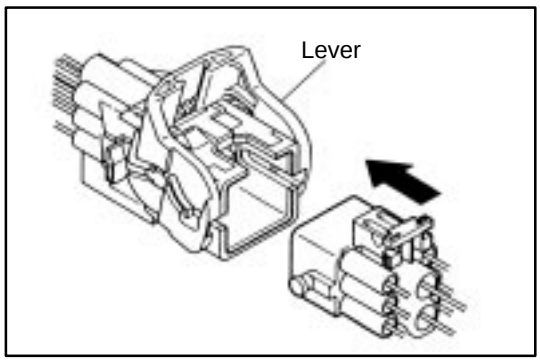

2. Connect the connector

(1) Connect the connector in the condition that the lever is fully lifted up.

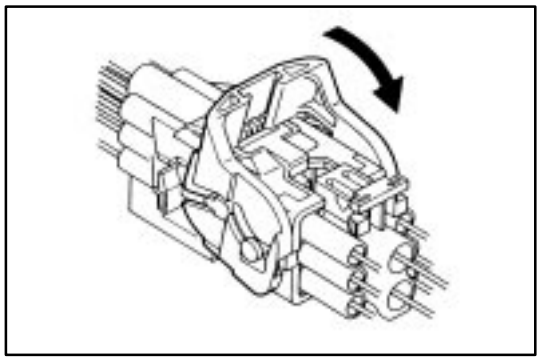

(2) Hold the connector to prevent it from slip off and push it down until you hear a click to lock it.

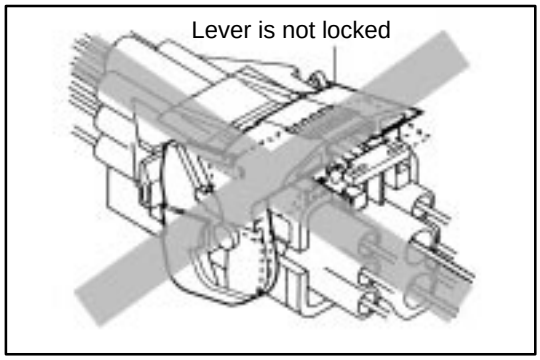

(3) Confirm that the lever is securely locked.

[Case 3]

1. Cut the connection of the connector

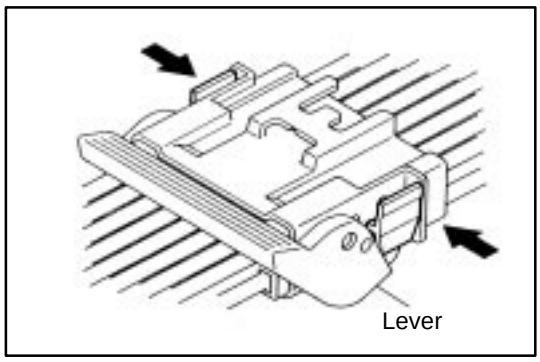

(1) Pick the part indicated in the illustration by fingers.

(2) The lock is released and the lever is lifted up.

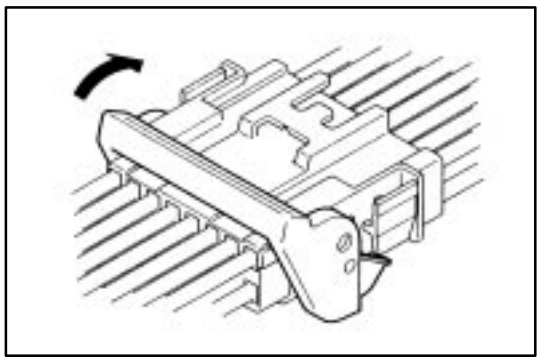

(3) Lift the lever up fully.

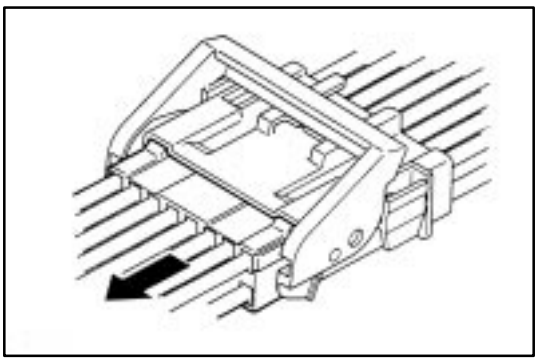

(4) Cut the connection of the connector.

NOTICE:
Do not hold the wire harness to pull it.

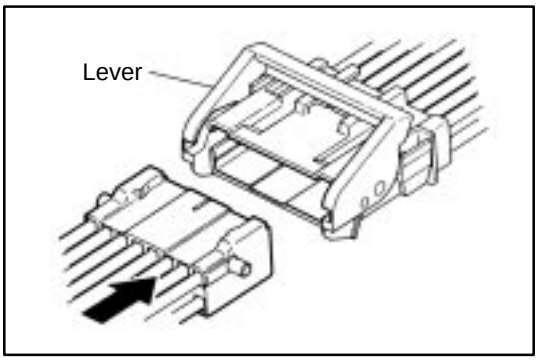

2. Connect the connector

(1) Connect the connector in the condition that the lever is fully lifted up.

HINT: If the lever is locked at the lower position, follow the procedure [Case 3]. (1) to (3) and lift the lever up fully.

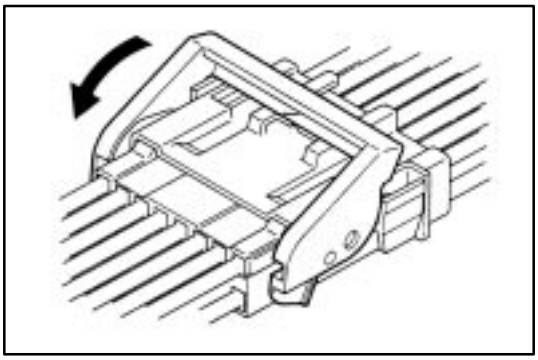

(2) Hold the connector to prevent it from slip off and push it down until you hear a click to lock it.

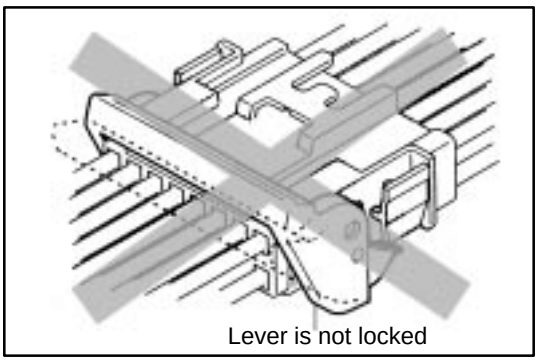

(3) Confirm that the lever is securely fitted

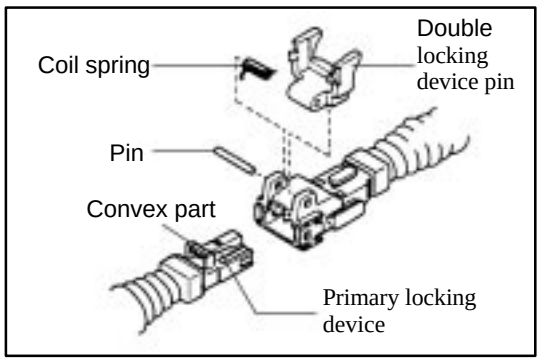

The connector with secondary locking device

1. Area used

- Wire harness for SRS airbag deployment

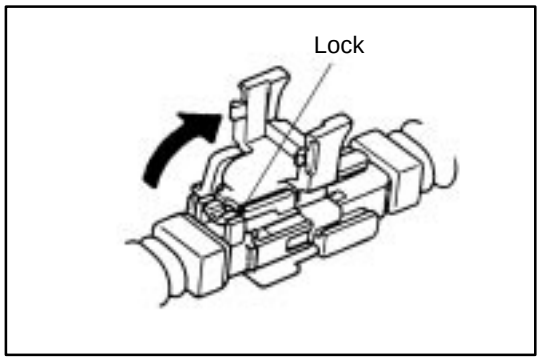

2. Cut the connection of the connector.

(1) Release the double locking.

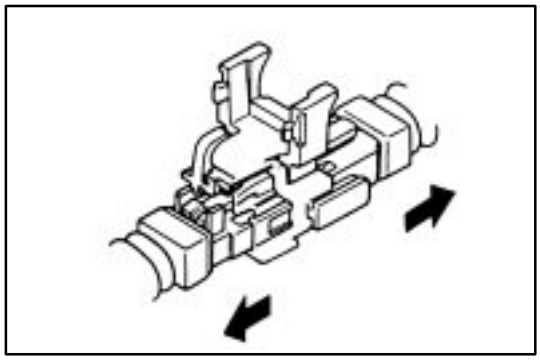

(2) Release the primary locking and separate the connector.

NOTICE:
Do not hold the wire harness to pull it.

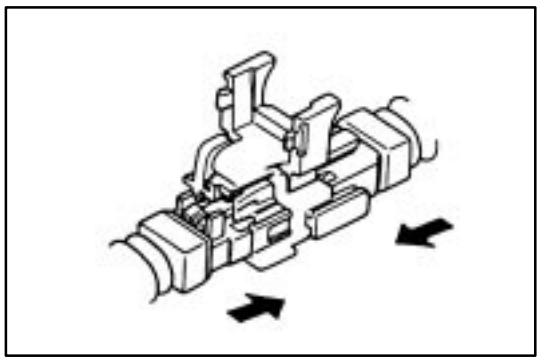

3. Connect the connector

(1) Install the primary locking device and connect the connector.

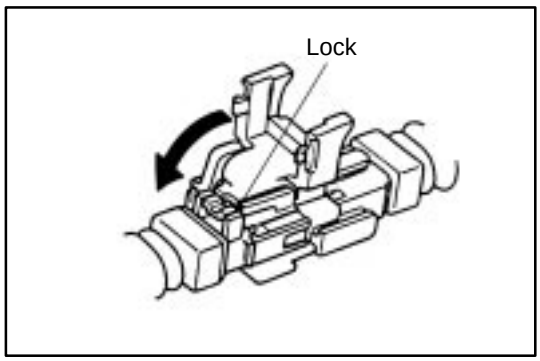

(2) Install the double locking device.

NOTICE:
The double locking device can not be installed unless the primary locking device is installed.

Connector fixed by bolts

1. Area used

- Engine control computer harness

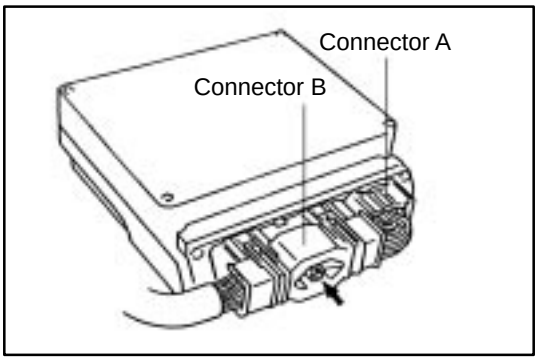

2. Cut the connection of the connector.

(1) Remove the connector A.

(2) Loose the bolt using a tool like driver until the connector B can be removed by hand and separate the connector.

HINT: If the bolt can not be removed, roll it while pulling forward.

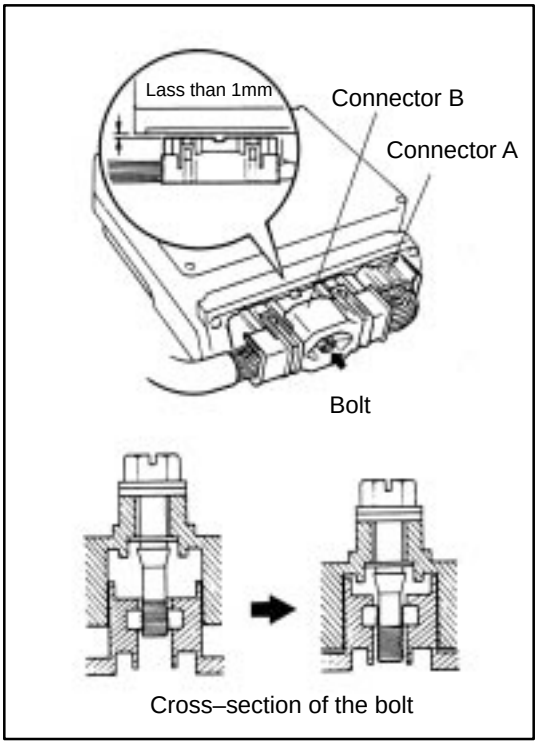

3. Connection of the connector

(1) Temporarily fit the connector B.

(2) Tighten the bolt by using tool like driver and fit the connector B completely.

NOTICE:

- **Tighten the bolt until feeling it lighter. Then confirm that the width of chink of the connector B is less than 1mm.**
- **The bolt can be rolled after it is fitted.**
- **If the impact wrench is used, do not let it rolling more than three seconds. (The housing may be deformed by generated heat)**
- **Be sure and connect the connector B straight. Do not incline it while connecting.**

(3) Connect the connector A.

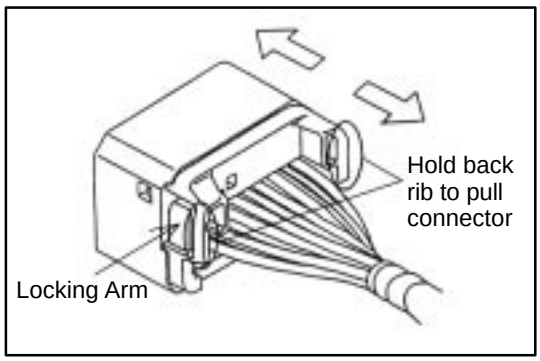

1. Cut the connection of the connector

(1) Push down on locking arm to unlock. Then hold the back ribs of connector to remove connector.

(2) Cut the Connection of the connector.

NOTICE:
Do not hold the wire harness to pull it.

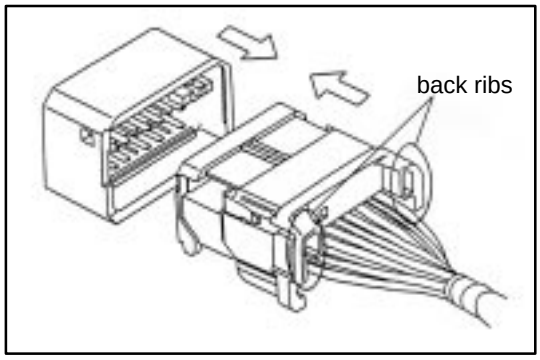

2. Connect the Connector

(1) Align the direction of locking feature in same direction and mate the connector holding the back ribs in straight direction.

(2) Insert it until a lock securely locks, and pull the connector lightly after the insertion, and confirm that a lock is enabled.

TABLE OF HOUSING CROSS SECTION

Type	○ : Position of the lance ↑ : Direction of lock released ⬆ : Direction of the special tool inserted	
	Male	Female
0.64		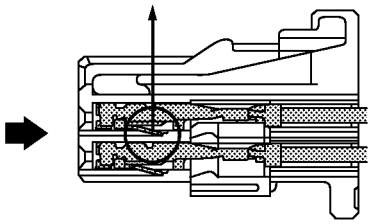 (Double Lock Type) [Terminal Lance]
0.64 IDC		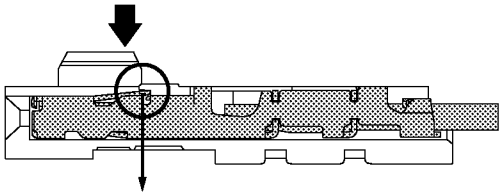 [Terminal Lance]
1.0		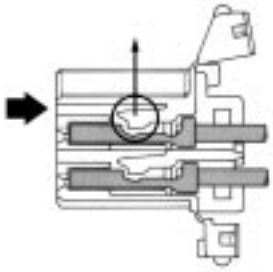 (Double Lock Type) [Housing Lance]
1.0II Non–waterproof Type	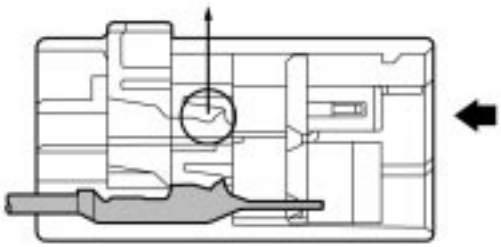 (Double Lock Type) [Housing Lance]	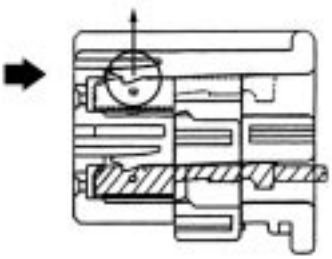 (Double Lock Type) [Housing Lance]

TABLE OF HOUSING CROSS SECTION

Type	○ : Position of the lance ↑ : Direction of lock released ⬆ : Direction of the special tool inserted	
	Male	Female
1.0II Waterproof Type		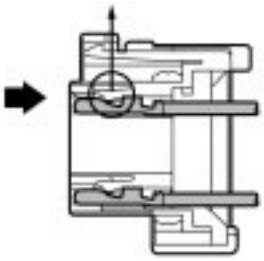 [Housing Lance]
1.0III 1.0IV Non–waterproof Type	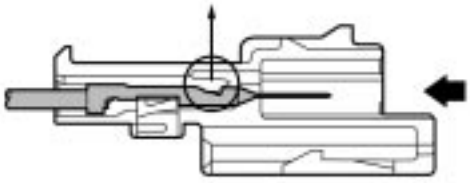 (Double Lock Type) [Housing Lance]	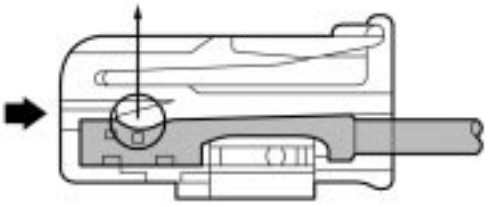 (Double Lock Type) [Housing Lance]
1.0III IDC	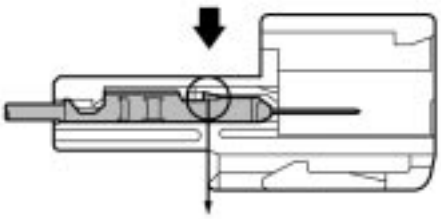 [Terminal Lance]	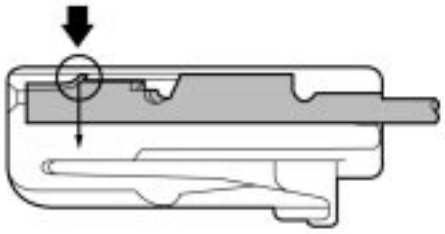 [Terminal Lance]
1.0III Waterproof Type	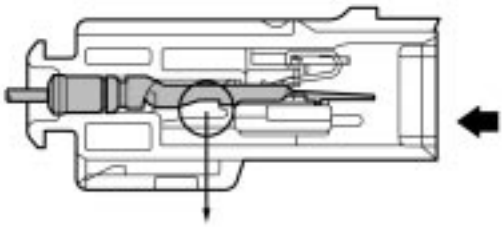 (Double Lock Type) [Housing Lance]	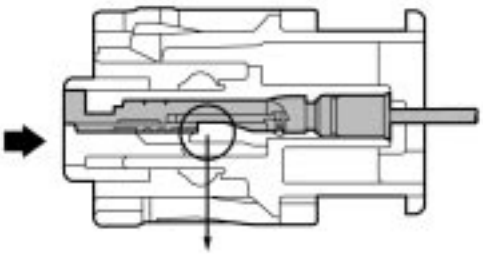 (Double Lock Type) [Housing Lance]

C

TABLE OF HOUSING CROSS SECTION

Type	○ : Position of the lance ↑ : Direction of lock released ↑ : Direction of the special tool inserted	
	Male	Female
1.3 Non–waterproof Type	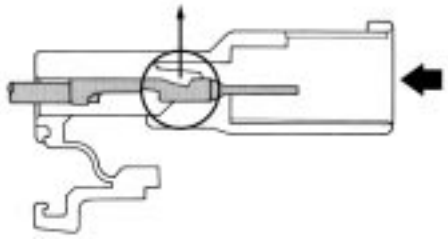 (Double Lock Type) [Housing Lance]	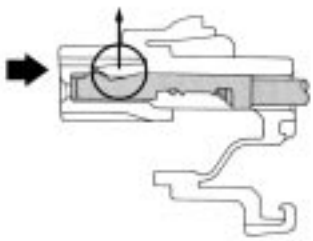 (Double Lock Type) [Housing Lance]
1.3 Non–waterproof Type	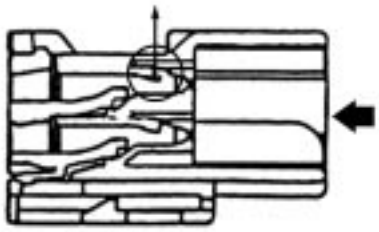 (Double Lock Type) [Housing Lance]	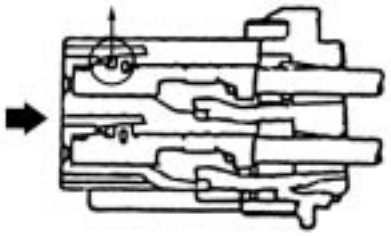 (Double Lock Type) [Housing Lance]
1.3 Non–waterproof Type	— 	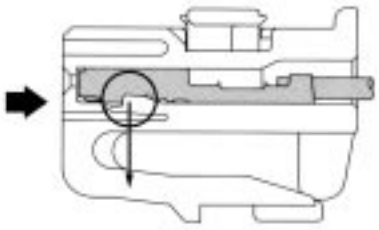 (Double Lock Type) [Housing Lance]
1.3 Waterproof Type	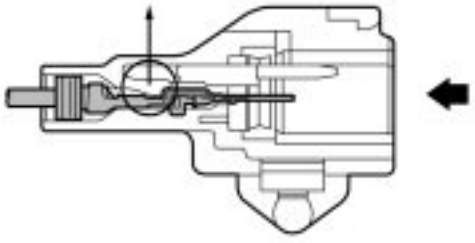 (Double Lock Type) [Housing Lance]	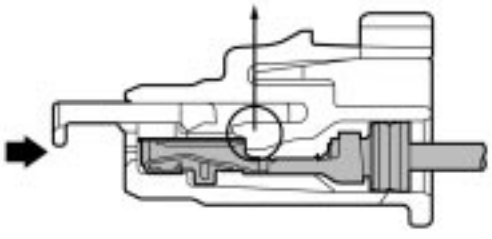 (Double Lock Type) [Housing Lance]

C

TABLE OF HOUSING CROSS SECTION

Type	○ : Position of the lance ↑ : Direction of lock released ↑ : Direction of the special tool inserted	
	Male	Female
1.8 Non–waterproof Type	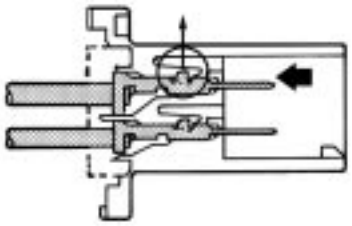 (Double Lock Type) [Housing Lance]	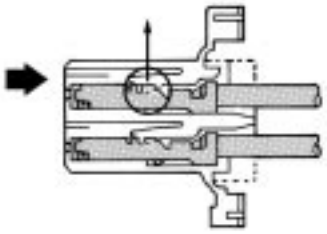 (Double Lock Type) [Housing Lance]
1.8 Waterproof Type	—	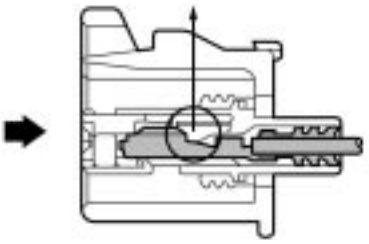 (Double Lock Type) [Housing Lance]
1.8II	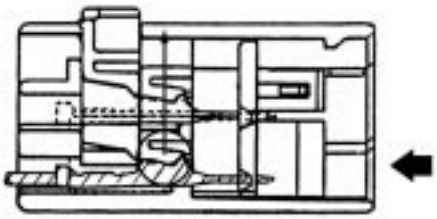 (Double Lock Type) [Housing Lance]	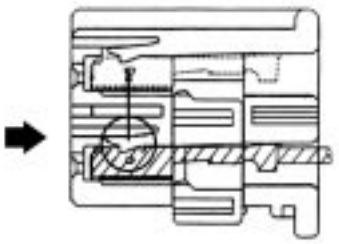 (Double Lock Type) [Housing Lance]
2.3 Non–waterproof Type	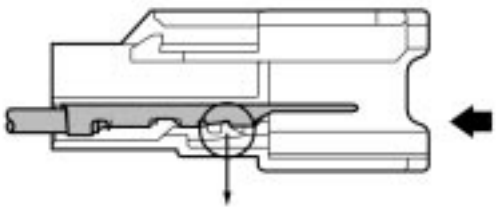 [Housing Lance]	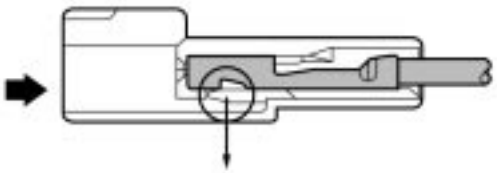 [Housing Lance]

C

TABLE OF HOUSING CROSS SECTION

Type	○ : Position of the lance ↑ : Direction of lock released ↑ : Direction of the special tool inserted	
	Male	Female
2.3 Waterproof Type	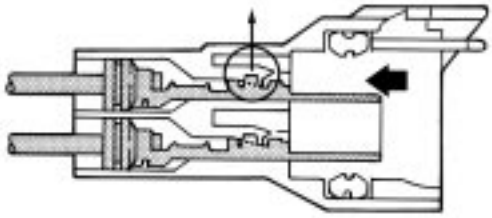 [Housing Lance]	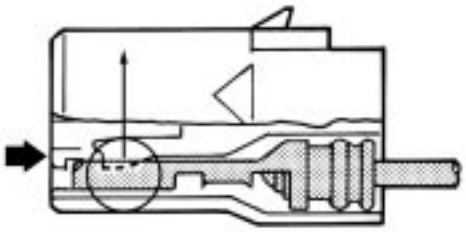 [Housing Lance]
2.3II Non–waterproof Type	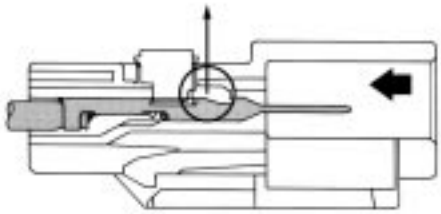 (Double Lock Type) [Housing Lance]	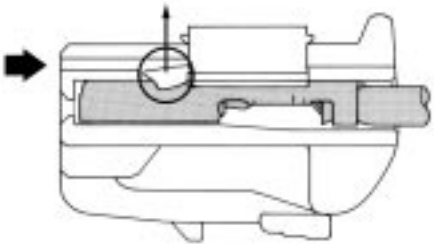 (Double Lock Type) [Housing Lance]
2.3II IDC		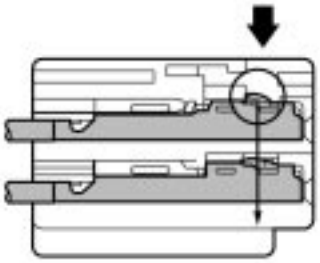 [Terminal Lance]
2.3II Waterproof Type	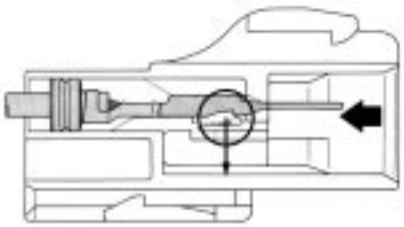 (Double Lock Type) [Housing Lance]	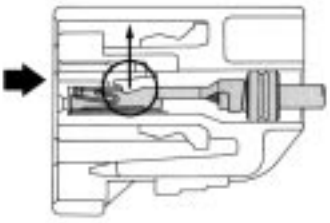 (Double Lock Type) [Housing Lance]

C

TABLE OF HOUSING CROSS SECTION

Type	○ : Position of the lance ↑ : Direction of lock released ⬆ : Direction of the special tool inserted	
	Male	Female
4.8 Non–waterproof Type	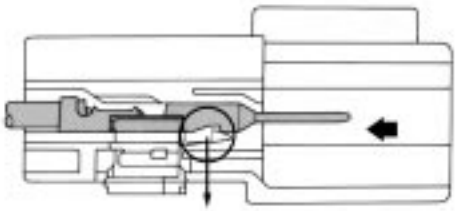 (Double Lock Type) [Housing Lance]	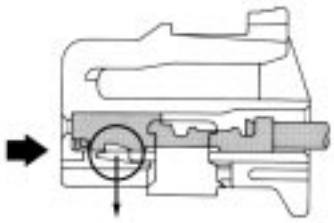 (Double Lock Type) [Housing Lance]
4.8 Waterproof Type	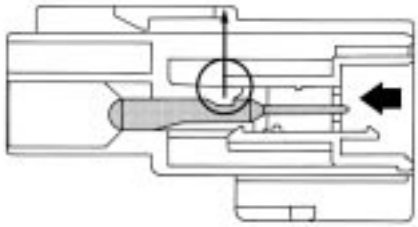 (Double Lock Type) [Housing Lance]	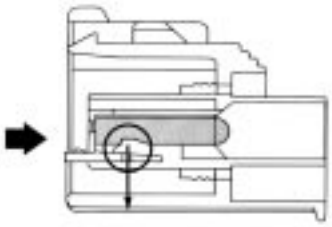 (Double Lock Type) [Housing Lance]
6.3 Non–waterproof Type	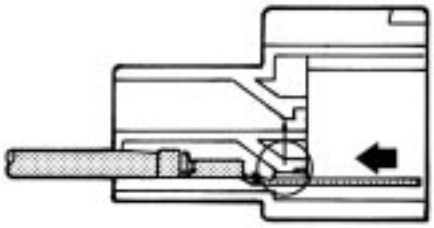 [Housing Lance]	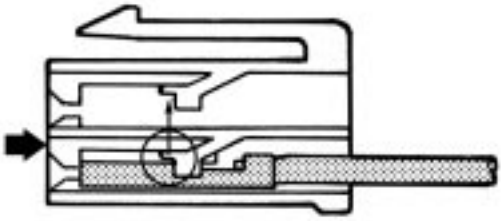 [Housing Lance]
6.3 Single Terminal		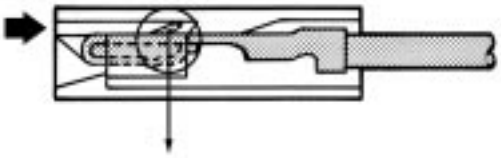 [Terminal Lance]

TABLE OF HOUSING CROSS SECTION

Type	○ : Position of the lance ↑ : Direction of lock released ↑ : Direction of the special tool inserted	
	Male	Female
8.0 Non–waterproof Type	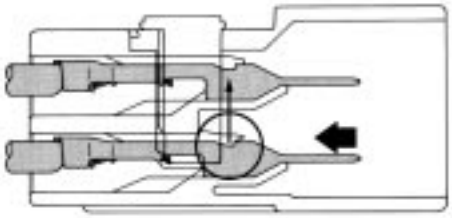 (Double Lock Type) [Housing Lance]	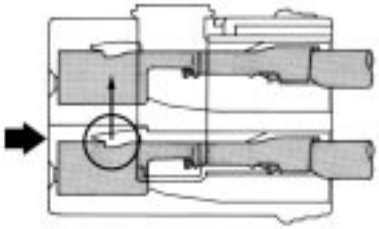 (Double Lock Type) [Housing Lance]
8.0 Waterproof Type	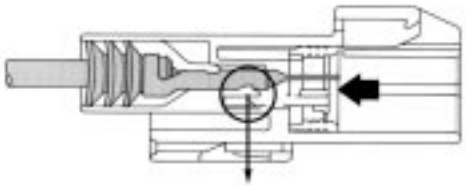 (Double Lock Type) [Housing Lance]	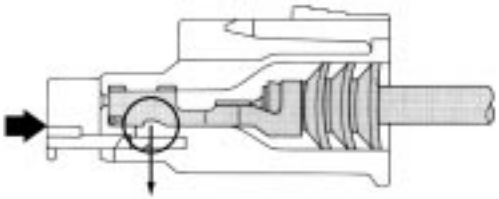 (Double Lock Type) [Housing Lance]
BLADE FUSE		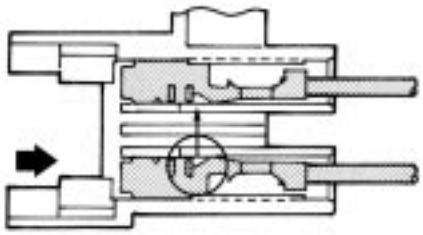 [Housing Lance]
C–Type	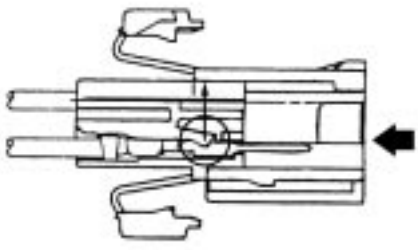 (Double Lock Type) [Housing Lance]	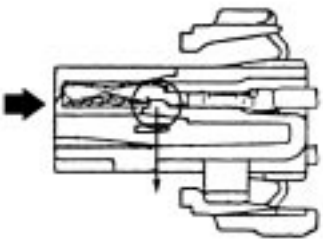 (Double Lock Type) [Housing Lance]

TABLE OF HOUSING CROSS SECTION

Type	○ : Position of the lance ↑ : Direction of lock released ⬆ : Direction of the special tool inserted	
	Male	Female
6.3 Waterproof Type		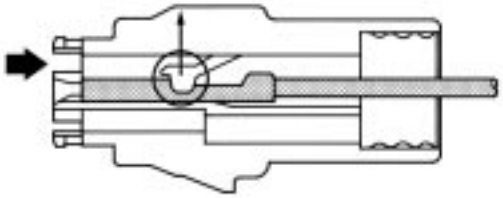 [Housing Lance]
6.3 Waterproof Type		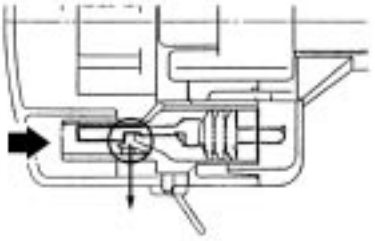 [Housing Lance]
7.7	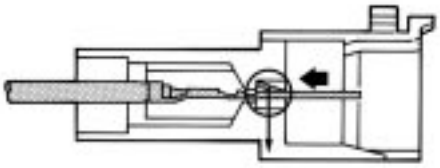 [Terminal Lance]	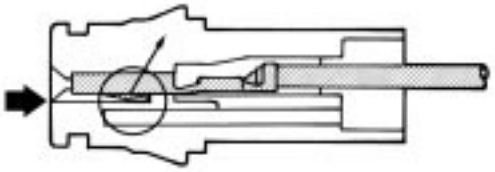 [Terminal Lance]
7.7	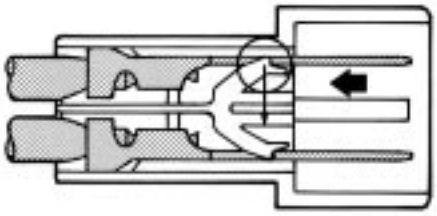 [Housing Lance]	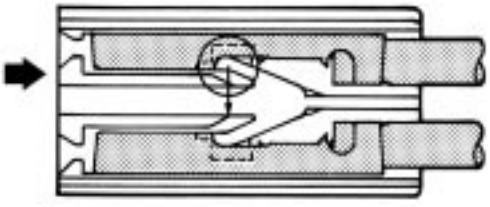 [Housing Lance]

C

TABLE OF HOUSING CROSS SECTION

Type	○ : Position of the lance ↑ : Direction of lock released ↑ : Direction of the special tool inserted	
	Male	Female
FOG–LP		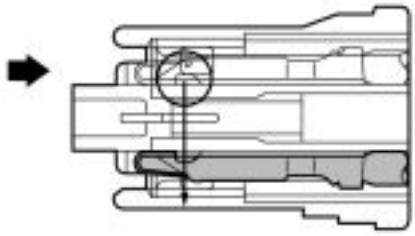 (Double Lock Type) [Housing Lance]
FTC		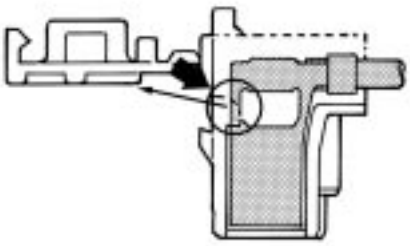 (Double Lock Type) [Housing Lance]
HEAD LAMP Waterproof Type		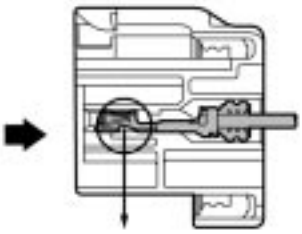 [Housing Lance]
HB3 HB4		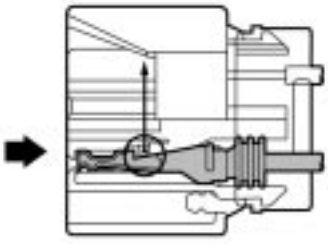 [Housing Lance]

TABLE OF HOUSING CROSS SECTION

Type	○ : Position of the lance ↑ : Direction of lock released ↑ : Direction of the special tool inserted	
	Male	Female
LAC	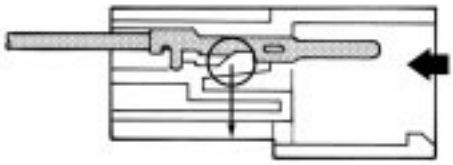 [Housing Lance]	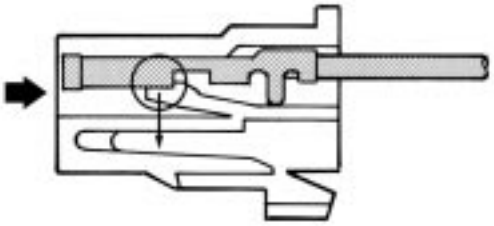 [Housing Lance]
MFPC	———	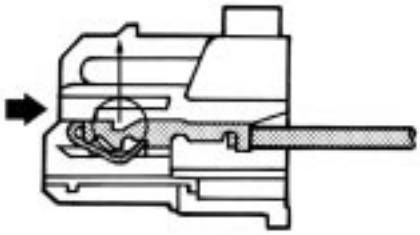 [Housing Lance]
MIC	———	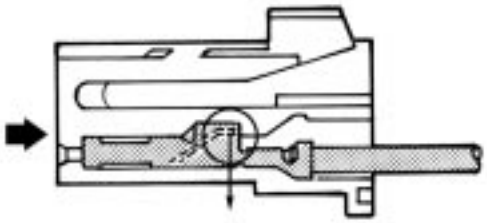 [Terminal Lance]
PULSE LOCK	———	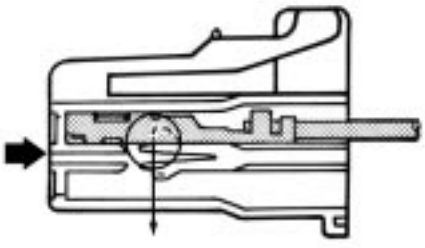 [Housing Lance]

TABLE OF HOUSING CROSS SECTION

Type	○ : Position of the lance ↑ : Direction of lock released ↑ : Direction of the special tool inserted	
	Male	Female
SFPC		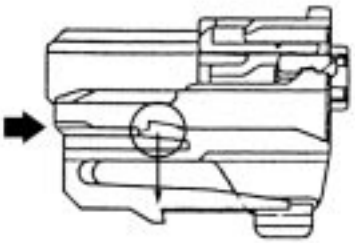 [Housing Lance]
SL		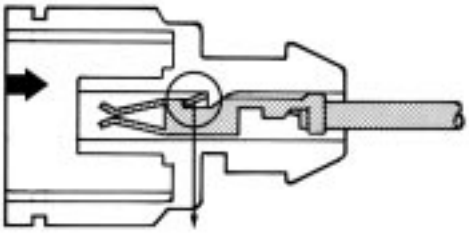 [Terminal Lance]
SP		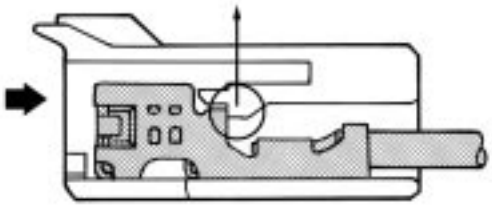 [Housing Lance]
TLC Non–waterproof Type	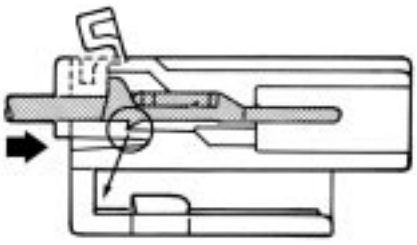 (Double Lock Type) [Housing Lance]	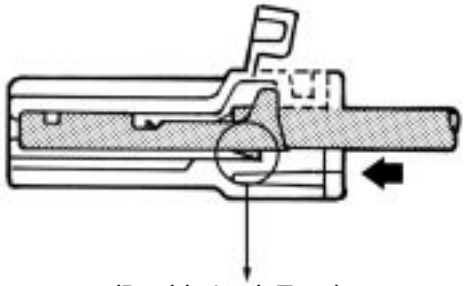 (Double Lock Type) [Housing Lance]

TABLE OF HOUSING CROSS SECTION

Type	○ : Position of the lance ↑ : Direction of lock released ⬆ : Direction of the special tool inserted	
	Male	Female
TLC Waterproof Type	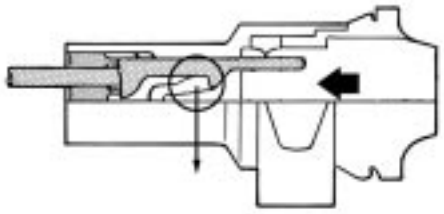 [Housing Lance]	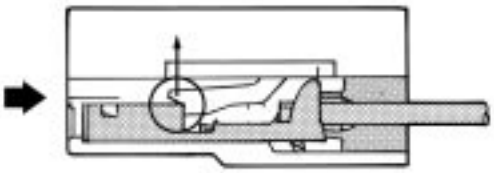 [Housing Lance]
TNS	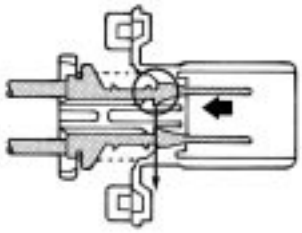 (Double Lock Type) [Housing Lance]	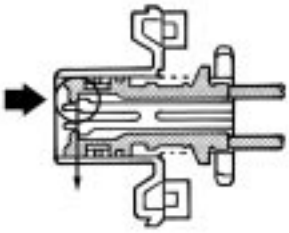 (Double Lock Type) [Housing Lance]
TODC	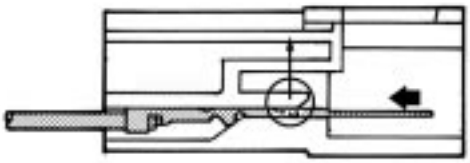 [Housing Lance]	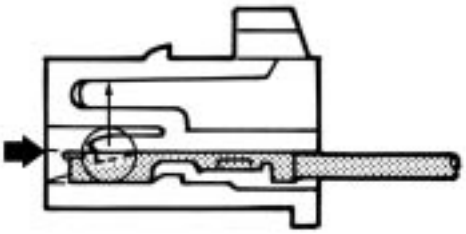 (Double Lock Type) [Housing Lance]

<FEMALE> 1P Waterproof Type

	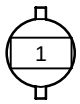		
90980–10090	90980–10115	90980–10197	90980–10201
			
90980–10241	90980–10247 90980–10705	90980–10439	90980–10837
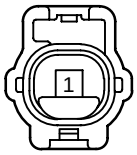		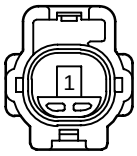	
90980–10893	90980–10983	90980–11007	90980–11166
			
90980–11184	90980–11243	90980–11252	90980–11271
			
90980–11282	90980–11363	90980–11400	90980–11428

<FEMALE> 1P Waterproof Type

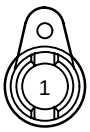 90980–11941	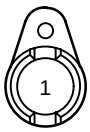 90980–11942	 90980–11943	 90980–11944
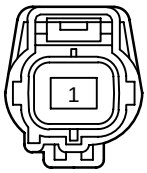 90980–11963	 90980–12125	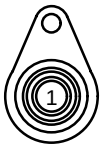 90980–12129 90980–12136	

<FEMALE> 2P Waterproof Type

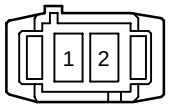	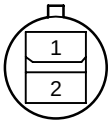	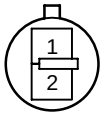	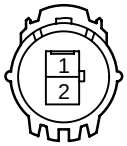
90980–10092	90980–10123	90980–10157	90980–10184
			
90980–10193	90980–10243	90980–10474	90980–10496
			
90980–10498 90980–10706	90980–10532	90980–10534	90980–10556
			
90980–10567	90980–10572	90980–10576	90980–10578
			
90980–10581	90980–10583	90980–10593	90980–10595

<FEMALE> 2P Waterproof Type

			
90980–10598	90980–10609	90980–10617	90980–10622
			
90980–10623	90980–10626	90980–10702	90980–10720
			
90980–10734	90980–10735	90980–10736	90980–10737
	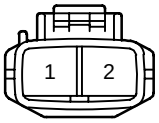	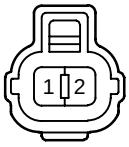	
90980–10748 90980–10846	90980–10839	90980–10843	90980–10847
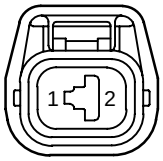			
90980–10853	90980–10887	90980–10899	90980–10901

D

<FEMALE> 2P Waterproof Type

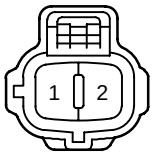	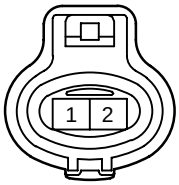		
90980–10923	90980–10928	90980–10947	90980–10949
		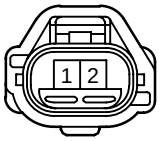	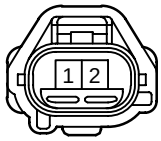
90980–10974	90980–11003	90980–11005	90980–11009
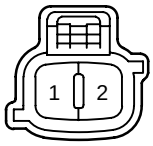	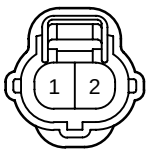	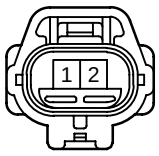	
90980–11019	90980–11025 90980–11401	90980–11030	90980–11032
	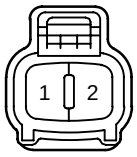		
90980–11038	90980–11051	90980–11061	90980–11062
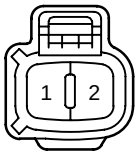			
90980–11068	90980–11070	90980–11075	90980–11095

<FEMALE> 2P Waterproof Type

	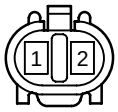	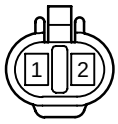	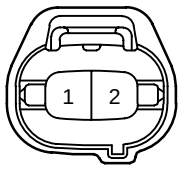
90980–11096	90980–11140	90980–11142	90980–11149
		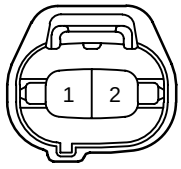	
90980–11153	90980–11154 90980–11284	90980–11156	90980–11162
			
90980–11163	90980–11176	90980–11189	90980–11207
		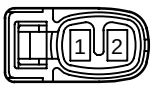	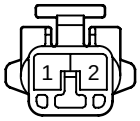
90980–11235	90980–11237	90980–11246	90980–11248
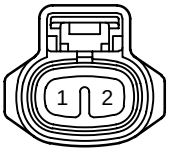		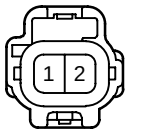	
90980–11250	90980–11255	90980–11273	90980–11285

<FEMALE> 2P Waterproof Type

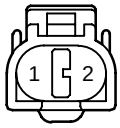			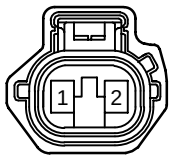
90980–11286	90980–11410	90980–11448	90980–11467
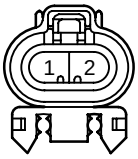	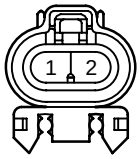		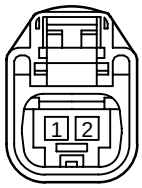
90980–11659	90980–11660	90980–11773	90980–11790
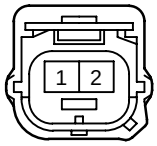			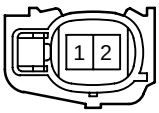
90980–11856	90980–11859	90980–11864	90980–11875
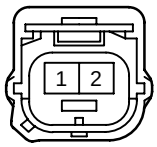		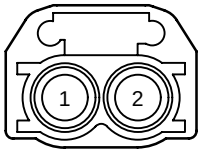	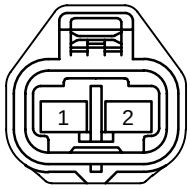
90980–11898	90980–11900	90980–12028	90980–12068
		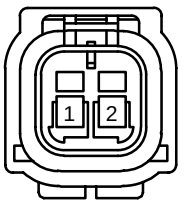	
90980–12117	90980–12188	90980–12195	

<FEMALE> 3P Waterproof Type

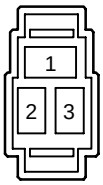 90980–10088	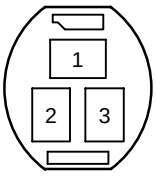 90980–10110	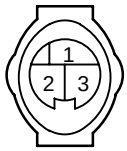 90980–10191	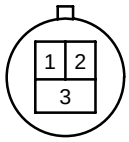 90980–10199
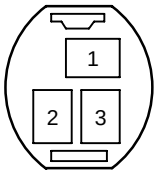 90980–10239	 90980–10245	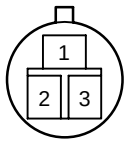 90980–10249	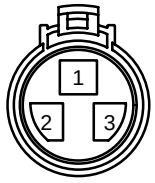 90980–10341 90980–11491
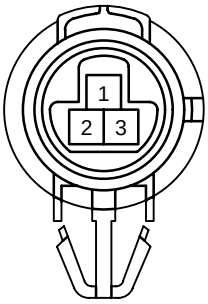 90980–10353	 90980–10395	 90980–10494	 90980–10501
 90980–10554	 90980–10574	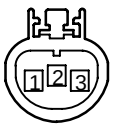 90980–10579	 90980–10629
 90980–10683	 90980–10690 90980–11157	 90980–10695	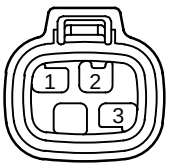 90980–10834

D

<FEMALE> 3P Waterproof Type

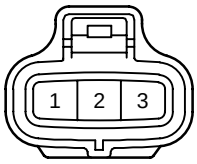	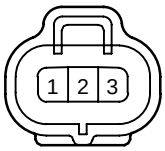		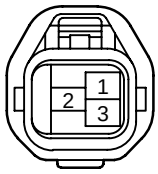
90980–10841	90980–10845	90980–10902	90980–10919
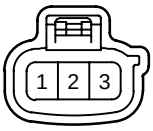	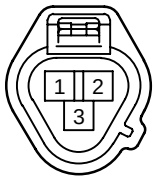	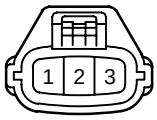	
90980–10981	90980–11016	90980–11020	90980–11045
			
90980–11108	90980–11132	90980–11143	90980–11145
		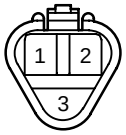	
90980–11161	90980–11170	90980–11245	90980–11261
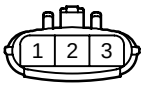	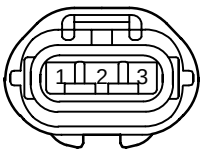	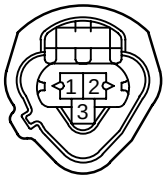	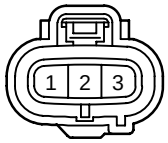
90980–11294	90980–11349	90980–11451	90980–11860

<FEMALE> 3P Waterproof Type

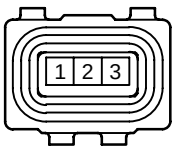 90980–11907	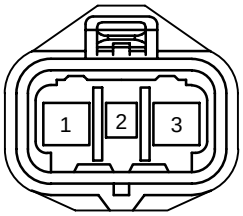 90980–12058	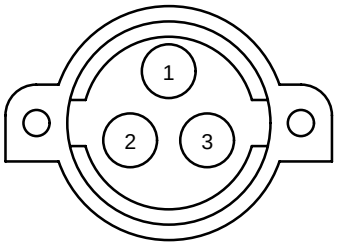 90980–12095	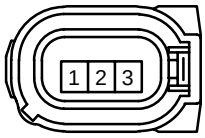 90980–12168
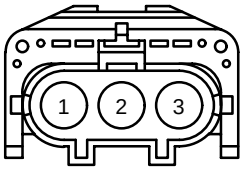 90980–12228			

<FEMALE> 4P Waterproof Type

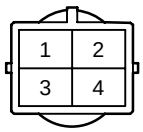	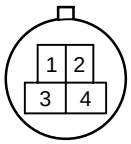	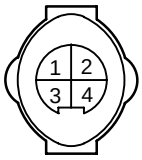	
90980–10095	90980–10140 90980–10220	90980–10203	90980–10218
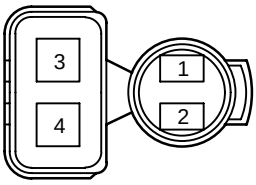		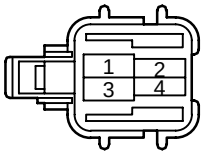	
90980–10373	90980–10476	90980–10549	90980–10551
		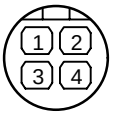	
90980–10591	90980–10649	90980–10663 90980–10664	90980–10685
	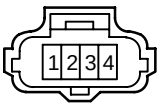	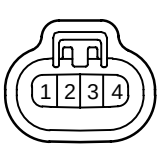	
90980–10701	90980–10711	90980–10831	90980–10844
	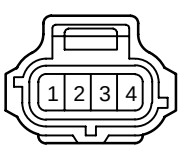	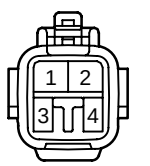	
90980–10869	90980–10929	90980–10940	90980–10942

<FEMALE> 4P Waterproof Type

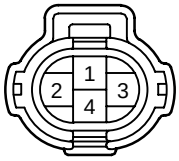		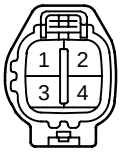	
90980–10943	90980–10990	90980–11028	90980–11036
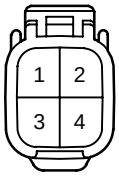	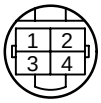		
90980–11037	90980–11065 90980–11066	90980–11139	90980–11150
	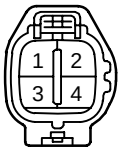		
90980–11152	90980–11178	90980–11269	90980–11283
			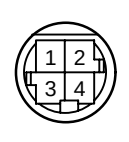
90980–11288	90980–11292	90980–11304	90980–11329 90980–11330
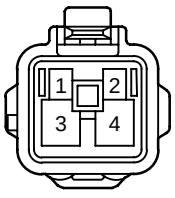	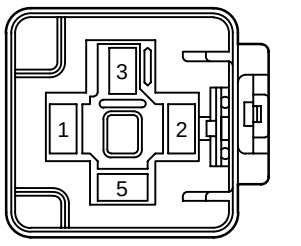	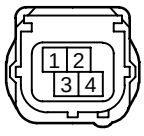	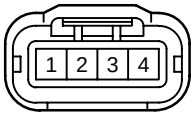
90980–11569	90980–11640	90980–11857	90980–11885

<FEMALE> 4P Waterproof Type

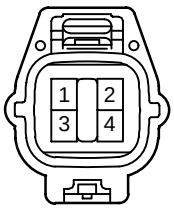			
90980–11930	90980–11964	90980–12005	90980–12057

<FEMALE> 5P Waterproof Type

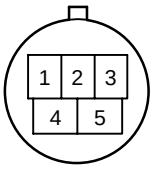	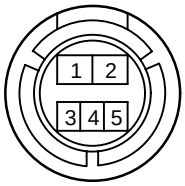		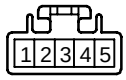
90980–10162	90980–10393	90980–10550	90980–10558
	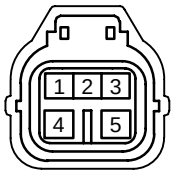	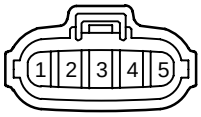	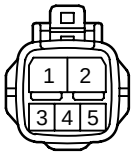
90980–10624	90980–10710	90980–10712	90980–10946
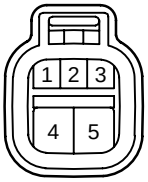	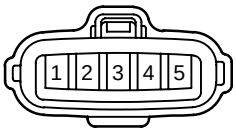	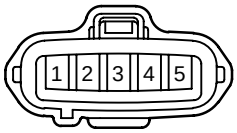	
90980–11022	90980–11024	90980–11049	90980–11077
	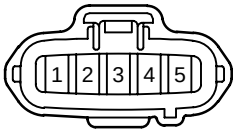	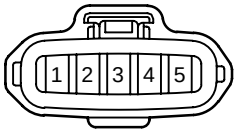	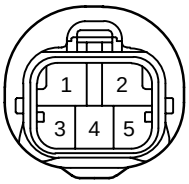
90980–11182	90980–11232	90980–11317	90980–11413
	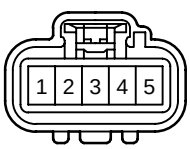		
90980–11599	90980–11904	90980–11960	

<FEMALE> 6P Waterproof Type

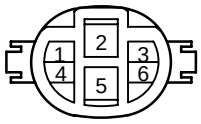		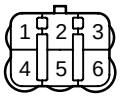	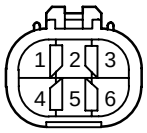
90980–10097	90980–10195	90980–10478	90980–10597
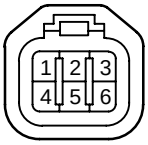	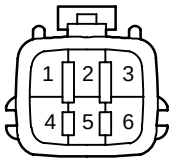	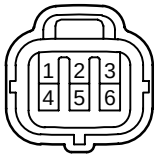	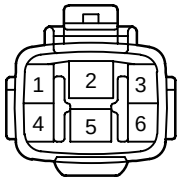
90980–10643	90980–10651	90980–10854	90980–10939
			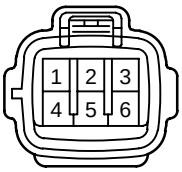
90980–10988	90980–11034	90980–11144	90980–11194
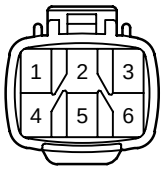	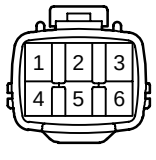	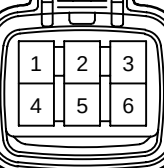	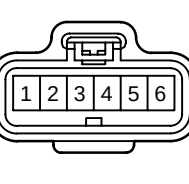
90980–11197	90980–11290	90980–11663	90980–11858

<FEMALE> 7P, 8P Waterproof Type

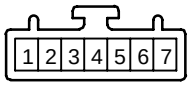	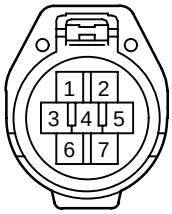		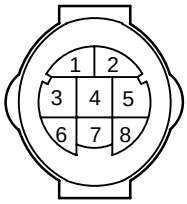
90980–10628	90980–10931	90980–11172	90980–10205
	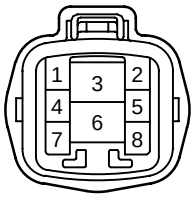	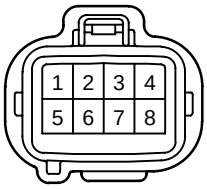	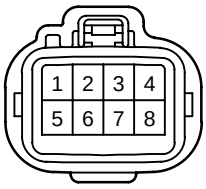
90980–10891	90980–10895	90980–10897	90980–11190
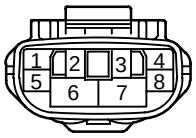	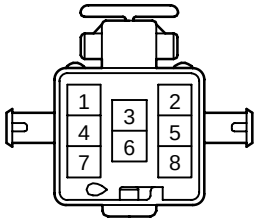	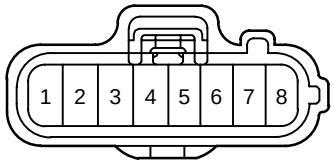	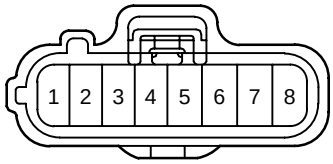
90980–11242	90980–11461	90980–11592	90980–11593
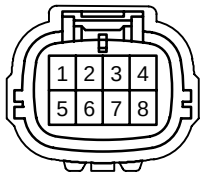	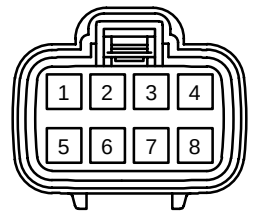		
90980–12080	90980–12164		

<FEMALE> 9P Waterproof Type

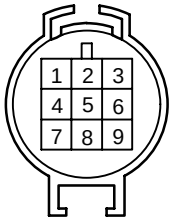 90980–10380 90980–10381	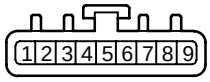 90980–10678	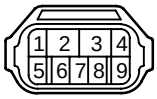 90980–10686
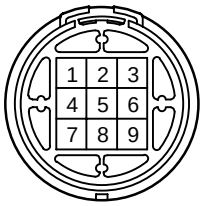 90980–10776	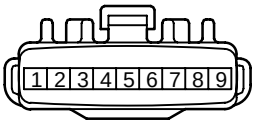 90980–11192	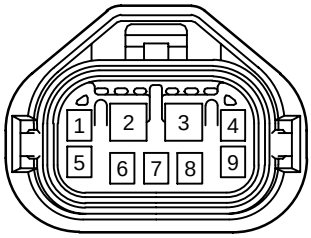 90980–11643
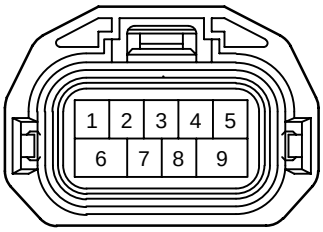 90980–11784		

<FEMALE> 10P Waterproof Type

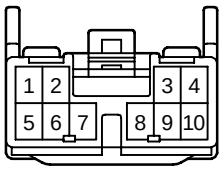

90980–11231

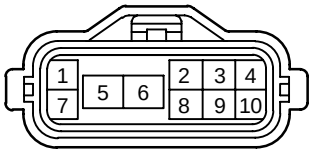

90980–11332

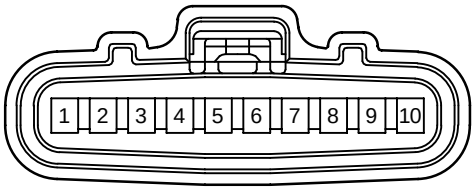

90980–11653

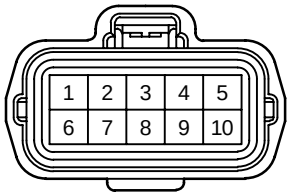

90980–11658

<FEMALE> 11P Waterproof Type

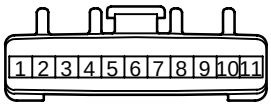 90980–11174	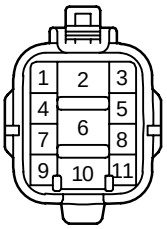 90980–11240
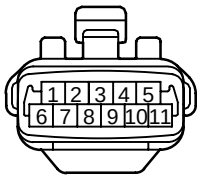 90980–11257	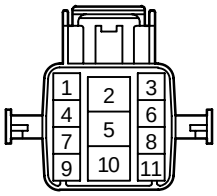 90980–11612

<FEMALE> 12P Waterproof Type

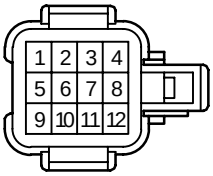

90980–10548

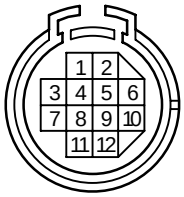

90980–10569



90980–11087

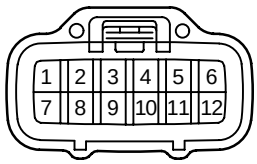

90980–11151

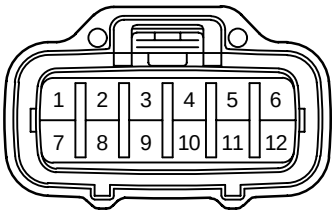

90980–11664

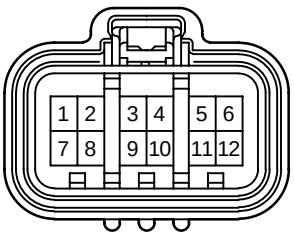

90980–11698

<FEMALE> 13P, 15P Waterproof Type

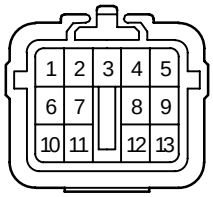

90980–10654

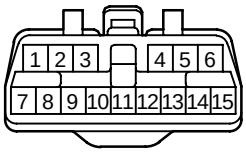

90980–11089

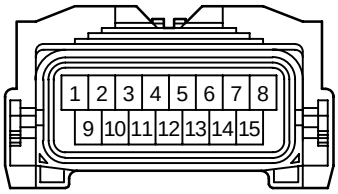

90980–11677

<FEMALE> 16P, 17P, 23P Waterproof Type

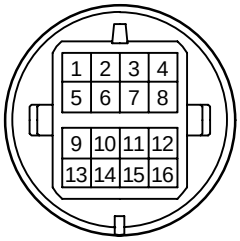

90980–10101

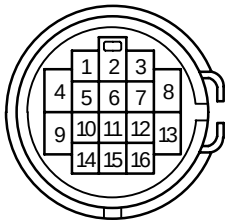

90980–10288

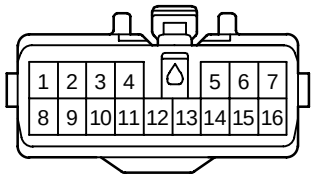

90980–11463

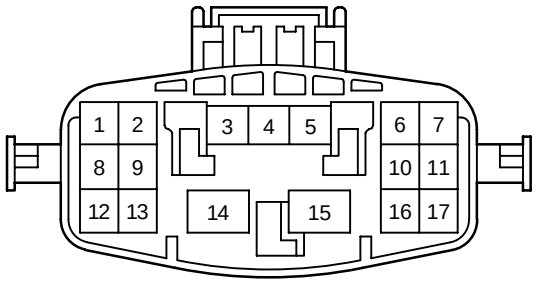

90980–11601

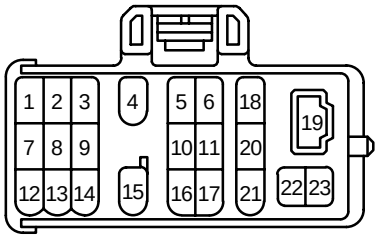

90980–11195

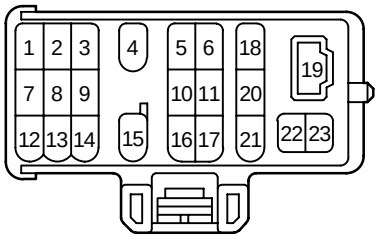

90980–11323

<FEMALE> 24P, 25P Waterproof Type

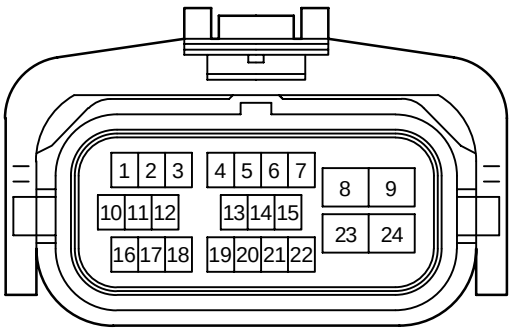

90980–11851

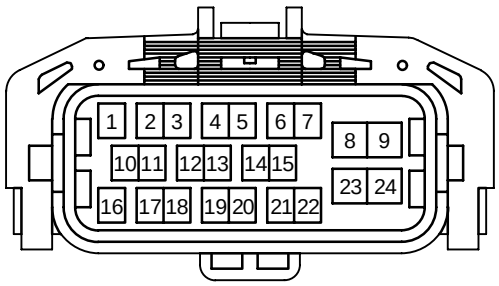

90980–11882

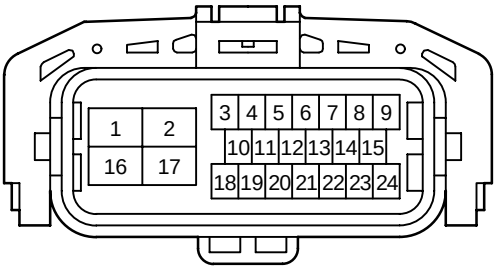

90980–11893

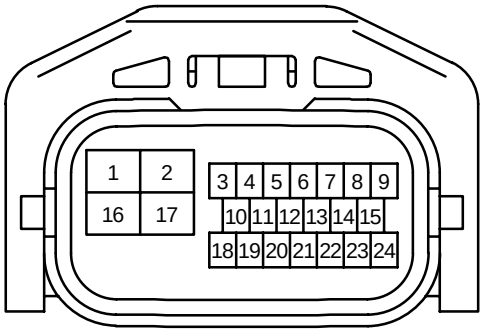

90980–12116

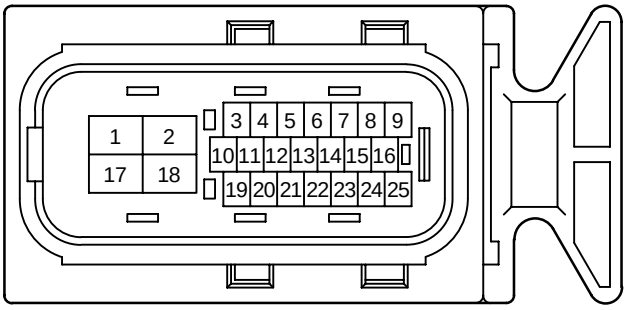

90980–11861

<FEMALE> 34P, 40P Waterproof Type

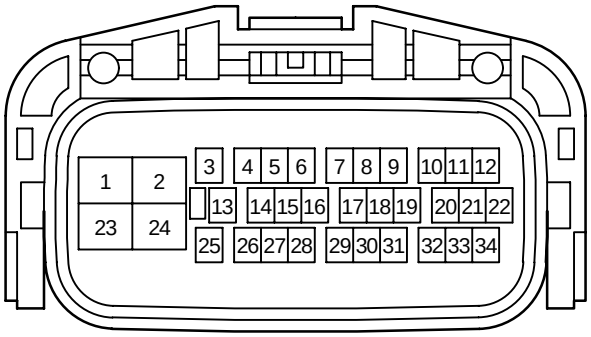

90980–12020

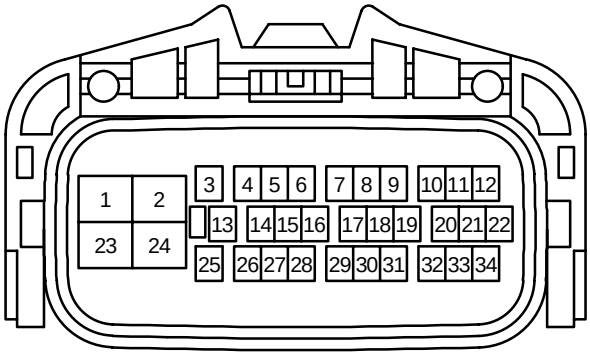

90980–12021
90980–12022

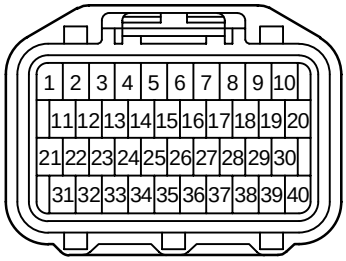

90980–11215

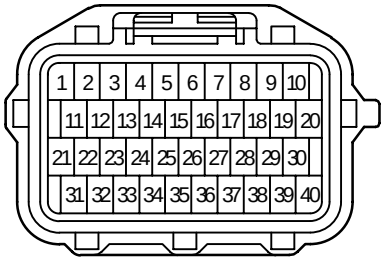

90980–11566

<FEMALE> 80P Waterproof Type

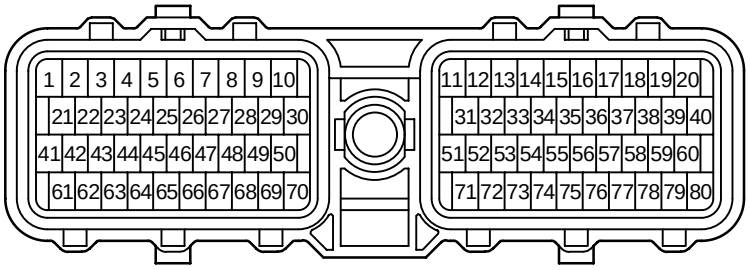

90980–11214

<FEMALE> 1P Non–waterproof Type

 90980–10165	 90980–10179	 90980–10183	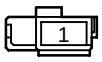 90980–10229
 90980–10250	 90980–10252	 90980–10254	 90980–10332
 90980–10343	 90980–10359	 90980–10363	 90980–10398
 90980–10435	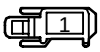 90980–10619	 90980–10652	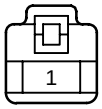 90980–10688
 90980–10703	 90980–10782	 90980–10786	 90980–10792

<FEMALE> 1P Non–waterproof Type

			
90980–10871	90980–10911	90980–10912	90980–10913
	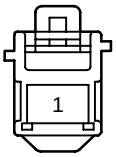		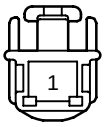
90980–10914	90980–10995	90980–11147	90980–11259
		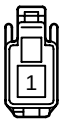	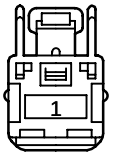
90980–11315	90980–11703	90980–11738	90980–11775
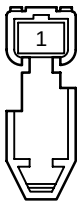	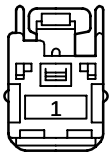		
90980–11853	90980–11881		

<FEMALE> 2P Non–waterproof Type

 90980–10012	 90980–10039	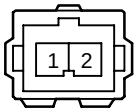 90980–10069	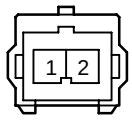 90980–10108
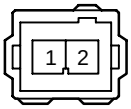 90980–10109	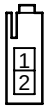 90980–10121	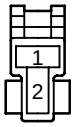 90980–10124	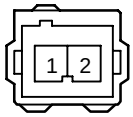 90980–10141
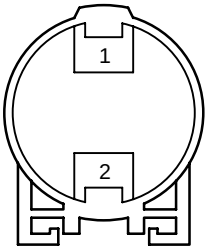 90980–10185	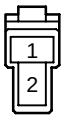 90980–10214	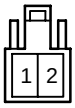 90980–10256	 90980–10298
 90980–10320	 90980–10333	 90980–10345	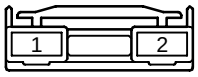 90980–10348
 90980–10355	 90980–10357	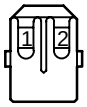 90980–10362	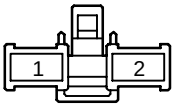 90980–10385

<FEMALE> 2P Non–waterproof Type

	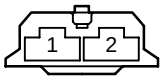	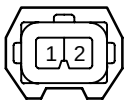	
90980–10423	90980–10425	90980–10426	90980–10465
			
90980–10481	90980–10482	90980–10491	90980–10511
			
90980–10512	90980–10559	90980–10621	90980–10637
			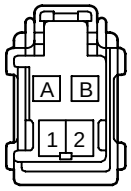
90980–10679	90980–10760	90980–10783	90980–10823
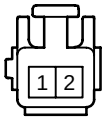	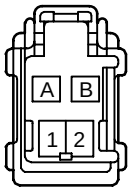	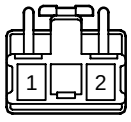	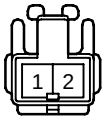
90980–10825	90980–10835	90980–10850	90980–10855

<FEMALE> 2P Non–waterproof Type

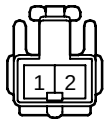	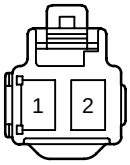	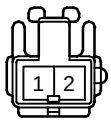	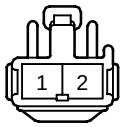
90980–10860	90980–10903	90980–10906	90980–10916
			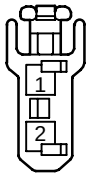
90980–10935	90980–10960	90980–10962	90980–11080
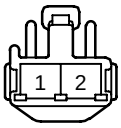	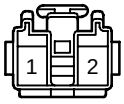		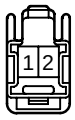
90980–11094	90980–11098	90980–11148	90980–11212
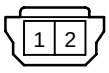			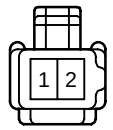
90980–11227	90980–11278	90980–11306	90980–11369
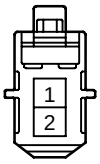			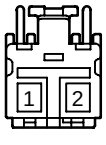
90980–11386	90980–11388	90980–11396	90980–11429

<FEMALE> 2P Non–waterproof Type

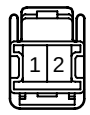	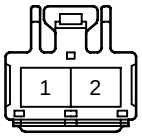		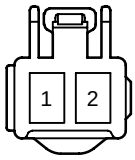
90980–11436	90980–11579	90980–11608	90980–11684
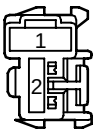	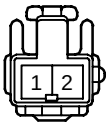	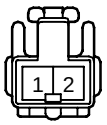	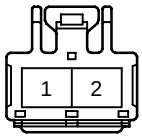
90980–11687	90980–11736	90980–11769	90980–11824
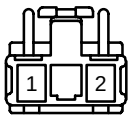		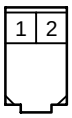	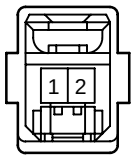
90980–11839	90980–11840	90980–11862	90980–11884
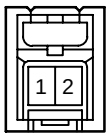	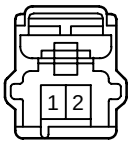	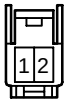	
90980–11886	90980–11890	90980–11918	90980–11919
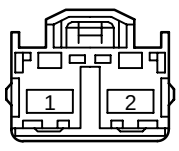	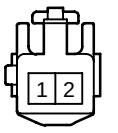	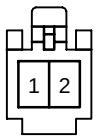	
90980–11996	90980–12014	90980–12039	90980–12063

<FEMALE> 2P Non–waterproof Type

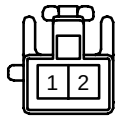 90980–12088	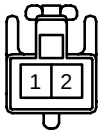 90980–12089	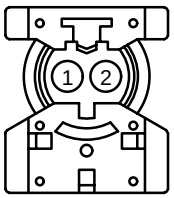 90980–12109	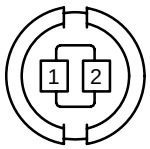 90980–12110
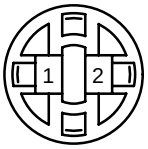 90980–12111	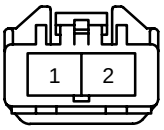 90980–12120	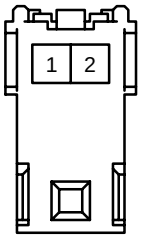 90980–12138	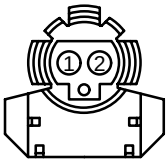 90980–12191
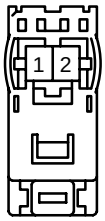 90980–12219 90980–12242	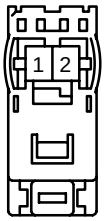 90980–12224 90980–12243	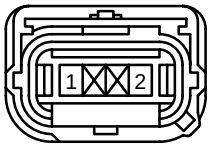 90980–12241	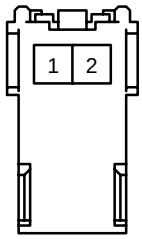 90980–12253

<FEMALE> 3P Non–waterproof Type

	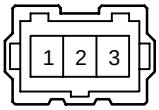	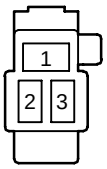	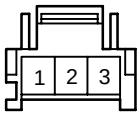
90980–10056	90980–10070	90980–10072	90980–10111
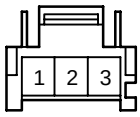	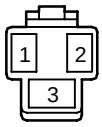	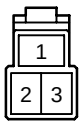	
90980–10143	90980–10189	90980–10216	90980–10222
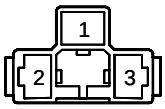		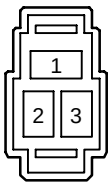	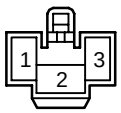
90980–10228	90980–10232	90980–10234	90980–10258
	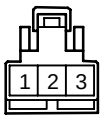	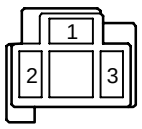	
90980–10365	90980–10420	90980–10428	90980–10464
	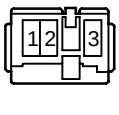	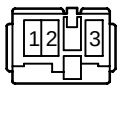	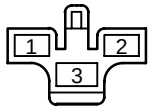
90980–10483	90980–10489	90980–10490	90980–10618

<FEMALE> 3P Non–waterproof Type

 90980–10638 90980–10660	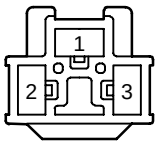 90980–10704	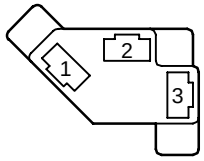 90980–10747	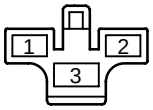 90980–10784
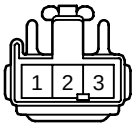 90980–10908	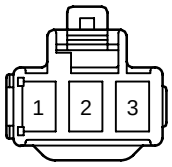 90980–10956	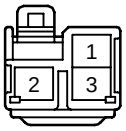 90980–10980	 90980–11053
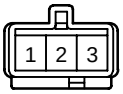 90980–11071	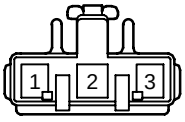 90980–11079	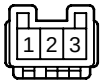 90980–11251	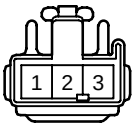 90980–11296
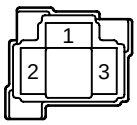 90980–11314	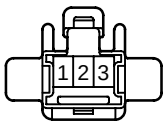 90980–11336	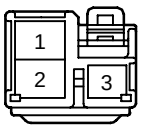 90980–11387	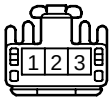 90980–11471
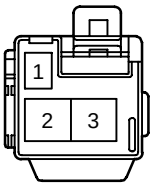 90980–11485	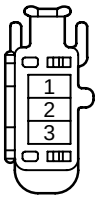 90980–11490	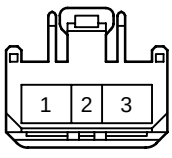 90980–11667	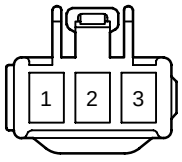 90980–11685

<FEMALE> 3P Non–waterproof Type

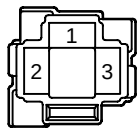	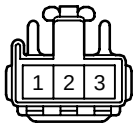	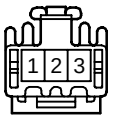	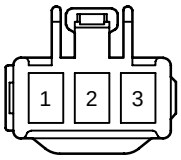
90980–11731	90980–11764	90980–11777	90980–11880
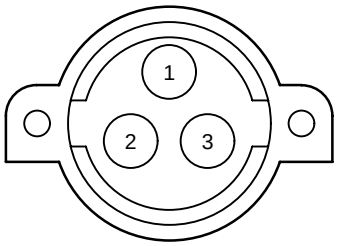		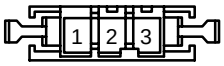	
90980–11938	90980–11987	90980–12197	

<FEMALE> 4P Non–waterproof Type

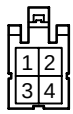		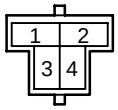	
90980–10002	90980–10127	90980–10142	90980–10171
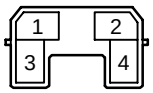	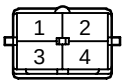	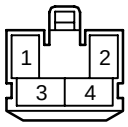	
90980–10196	90980–10221	90980–10260	90980–10307
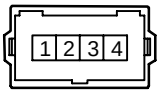	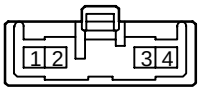		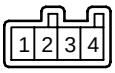
90980–10378	90980–10400	90980–10467	90980–10484
		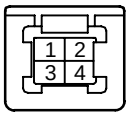	
90980–10504	90980–10514	90980–10515	90980–10601
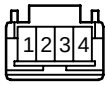	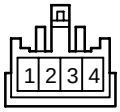		
90980–10645	90980–10692	90980–10716	90980–10717

<FEMALE> 4P Non–waterproof Type

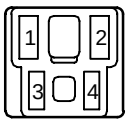 90980–10759	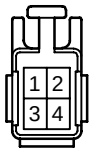 90980–10795	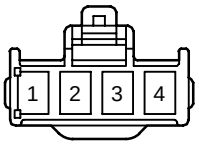 90980–10867	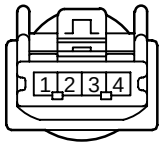 90980–10904
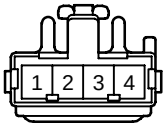 90980–11013	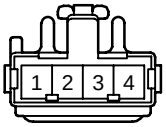 90980–11090	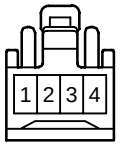 90980–11107	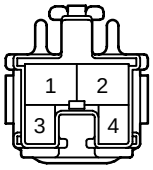 90980–11118
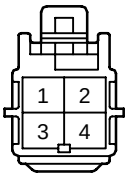 90980–11136	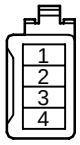 90980–11187	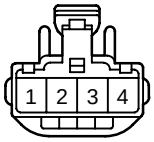 90980–11313	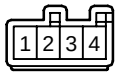 90980–11398
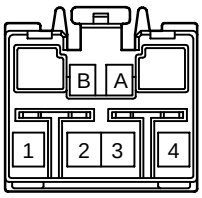 90980–11427	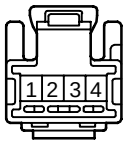 90980–11494	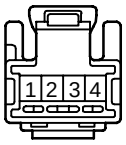 90980–11495	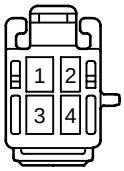 90980–11606
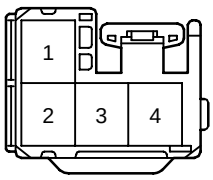 90980–11662	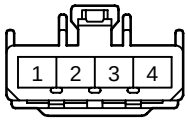 90980–11676	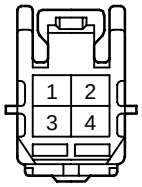 90980–11742	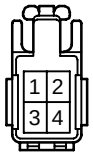 90980–11766

<FEMALE> 4P Non–waterproof Type

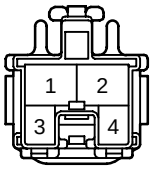 90980–11771	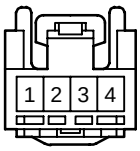 90980–11792	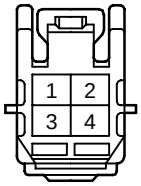 90980–11799	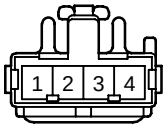 90980–11841
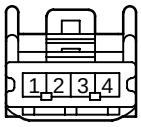 90980–11842	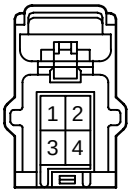 90980–11892	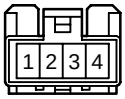 90980–11950	 90980–11988
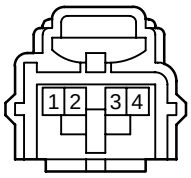 90980–12017	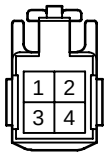 90980–12018	 90980–12019	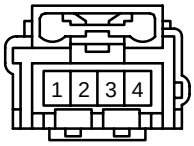 90980–12160
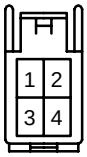 90980–12211	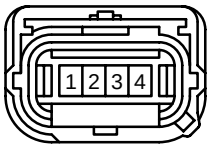 90980–12225		

<FEMALE> 5P Non–waterproof Type

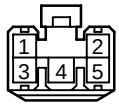	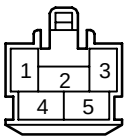	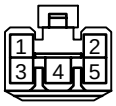	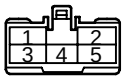
90980–10041	90980–10262	90980–10274	90980–10339
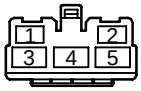	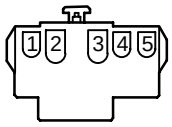	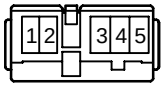	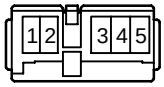
90980–10340	90980–10376	90980–10487	90980–10488
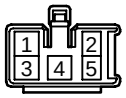	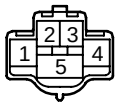	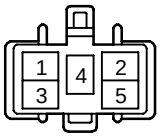	
90980–10509	90980–10520	90980–10610	90980–10631
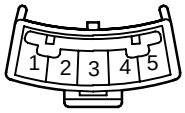	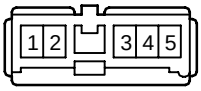	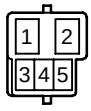	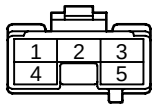
90980–10644	90980–10659	90980–10713	90980–10718
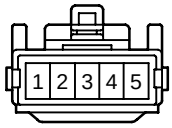	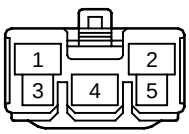	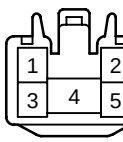	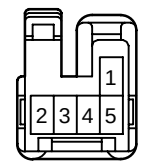
90980–10789	90980–10888	90980–10986	90980–11319

<FEMALE> 5P Non–waterproof Type

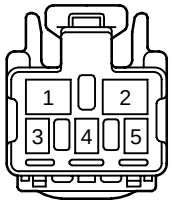 90980–11603	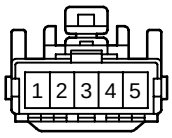 90980–11772	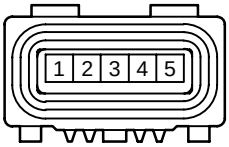 90980–11908	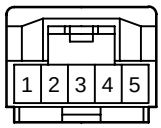 90980–11909
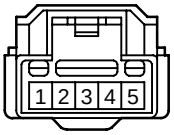 90980–11921	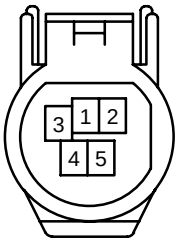 90980–12190		

<FEMALE> 6P Non–waterproof Type

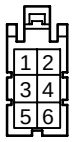	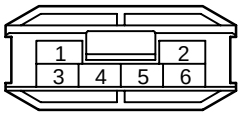	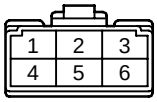	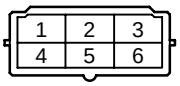
90980–10004	90980–10029	90980–10173	90980–10224
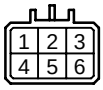	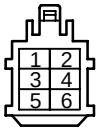	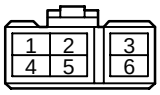	
90980–10313	90980–10334	90980–10335	90980–10367
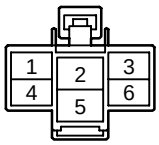	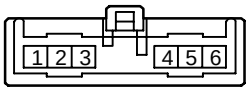	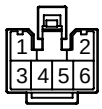	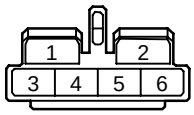
90980–10382	90980–10402	90980–10414	90980–10447
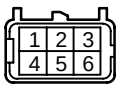			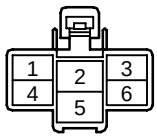
90980–10604	90980–10605	90980–10672	90980–10673
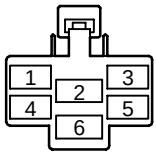	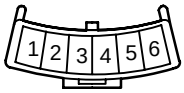	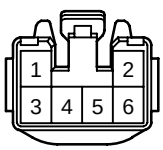	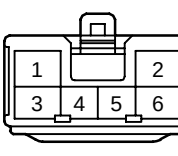
90980–10766	90980–10785	90980–10797	90980–10889

<FEMALE> 6P Non–waterproof Type

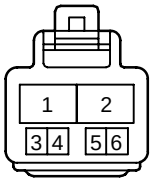	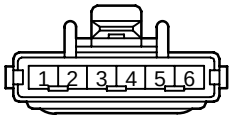	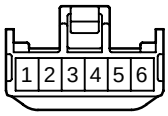	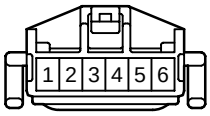
90980–10910	90980–10933	90980–10957	90980–10964
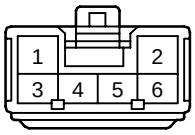	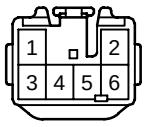	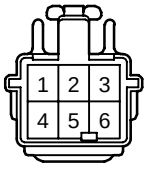	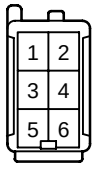
90980–10976	90980–10996	90980–11001	90980–11011
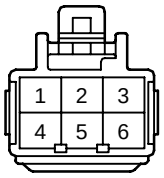	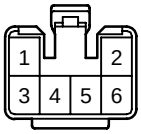	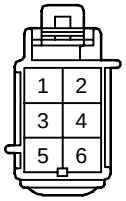	
90980–11091	90980–11280	90980–11297	90980–11326
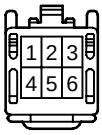	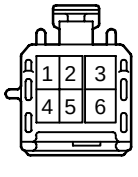		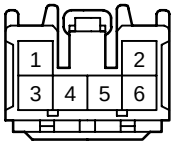
90980–11488	90980–11493	90980–11552	90980–11583
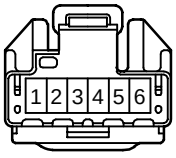	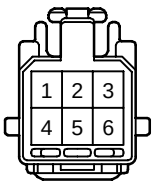	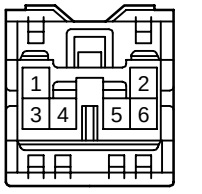	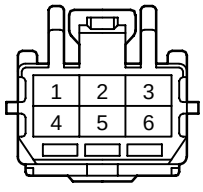
90980–11616	90980–11617	90980–11697	90980–11778

<FEMALE> 6P Non–waterproof Type

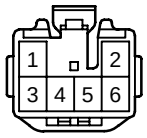	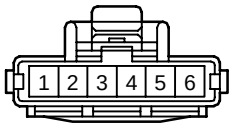	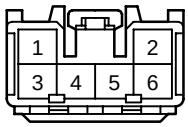	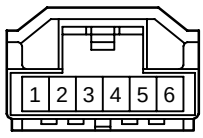
90980–11780	90980–11820	90980–11879	90980–11986
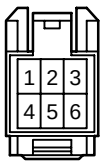	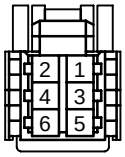	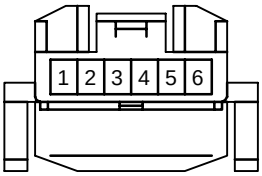	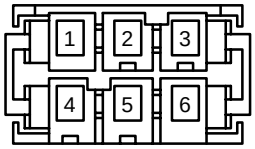
90980–12012	90980–12056	90980–12067	90980–12199
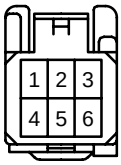			
90980–12209			

<FEMALE> 7P Non–waterproof Type

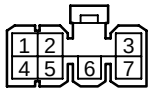 90980–10043	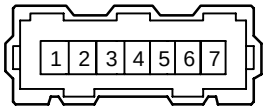 90980–10071	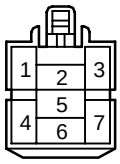 90980–10264	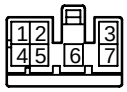 90980–10311
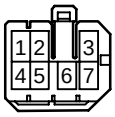 90980–10452	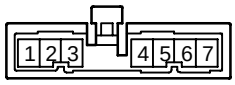 90980–10460	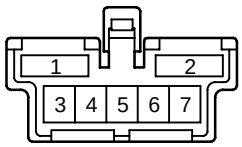 90980–10729 90980–10772	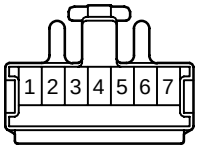 90980–11165
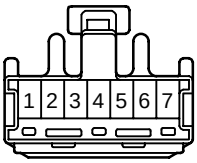 90980–11340	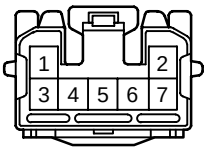 90980–11529	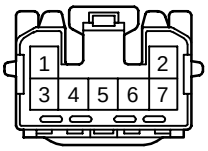 90980–11740	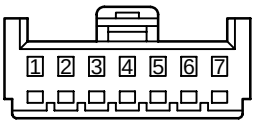 90980–11794
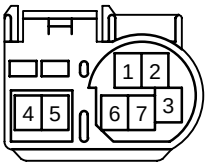 90980–12060			

<FEMALE> 8P Non–waterproof Type

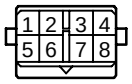	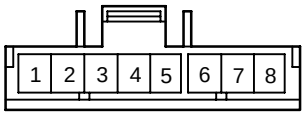	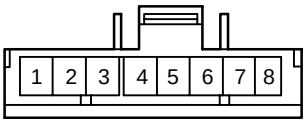	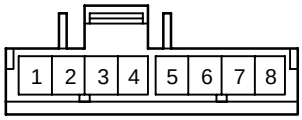
90980–10019	90980–10112	90980–10113	90980–10119
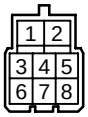	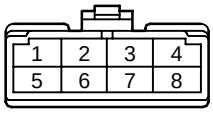	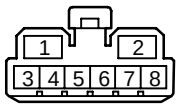	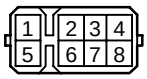
90980–10148	90980–10175	90980–10209	90980–10280
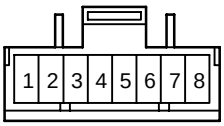	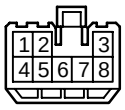	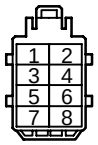	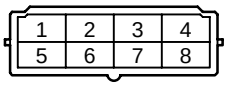
90980–10301	90980–10321	90980–10336	90980–10358
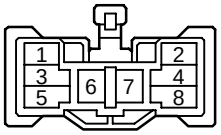	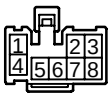	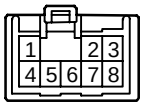	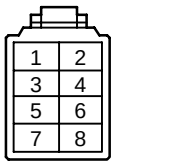
90980–10404	90980–10419	90980–10431	90980–10449
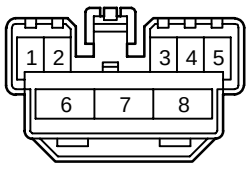	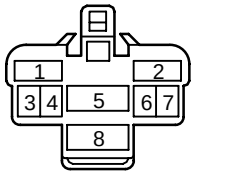	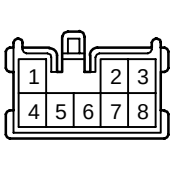	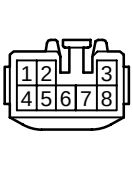
90980–10463	90980–10517	90980–10523	90980–10799

<FEMALE> 8P Non–waterproof Type

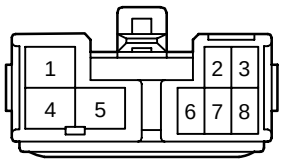 90980–10877 90980–11439	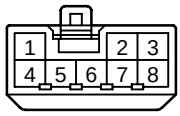 90980–10926	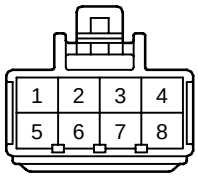 90980–11092	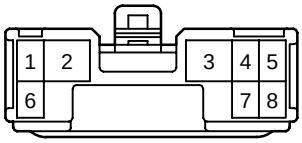 90980–11130
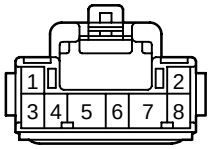 90980–11279	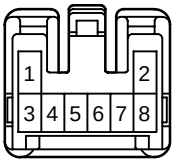 90980–11321	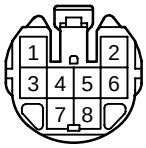 90980–11354	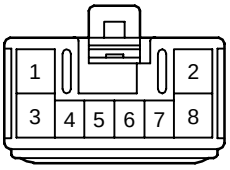 90980–11362
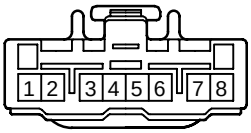 90980–11397	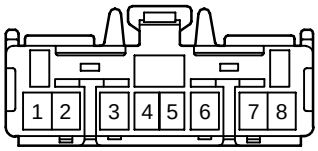 90980–11459	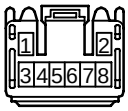 90980–11533	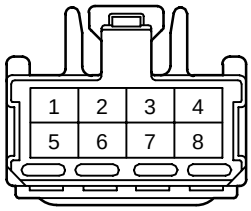 90980–11615
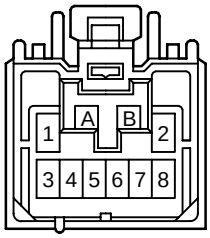 90980–11630	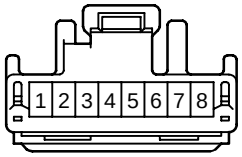 90980–11633	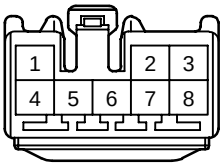 90980–11686	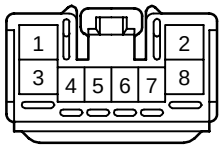 90980–11701
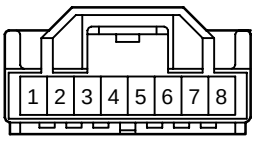 90980–11989	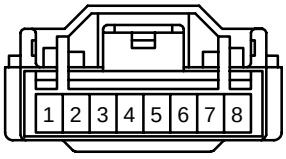 90980–12091	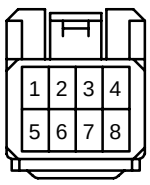 90980–12113	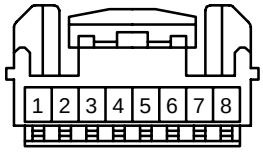 90980–12217

<FEMALE> 8P Non–waterproof Type

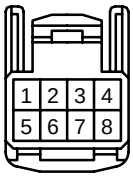 90980–12221			

<FEMALE> 9P Non–waterproof Type

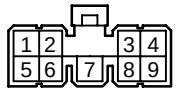 90980–10045	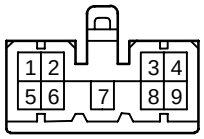 90980–10133	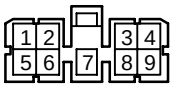 90980–10152	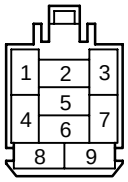 90980–10266
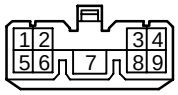 90980–10318	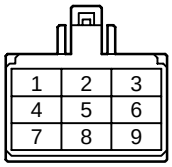 90980–10386	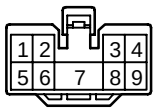 90980–10536	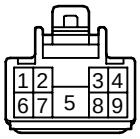 90980–11277
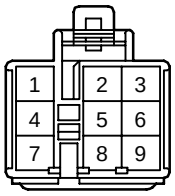 90980–11302	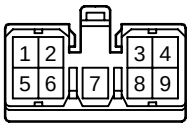 90980–11479	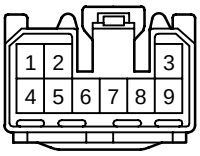 90980–11535	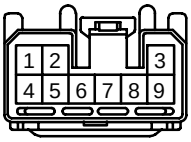 90980–11710
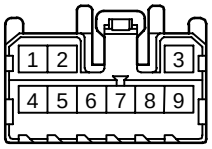 90980–12026			

<FEMALE> 10P Non–waterproof Type

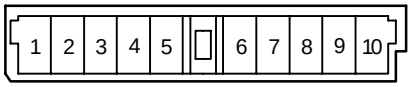 90980–10158	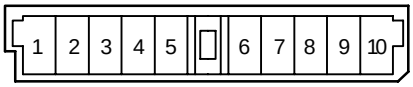 90980–10159	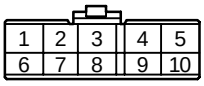 90980–10177
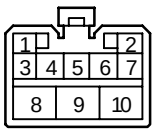 90980–10282	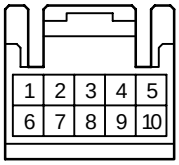 90980–10294	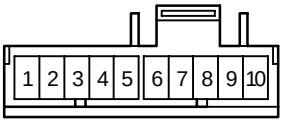 90980–10302
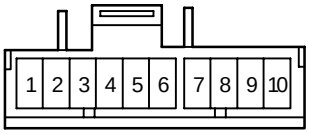 90980–10304	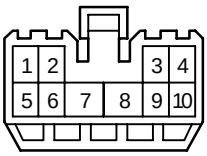 90980–10322	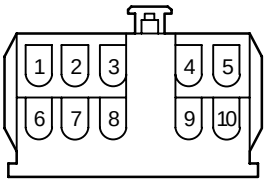 90980–10377
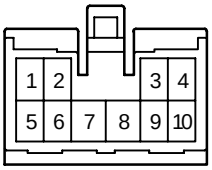 90980–10469	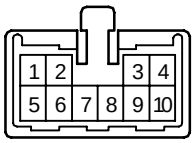 90980–10528	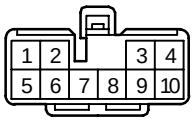 90980–10669

<FEMALE> 10P Non–waterproof Type

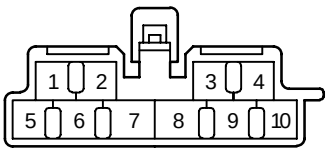	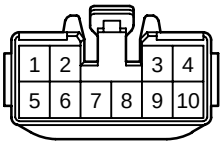	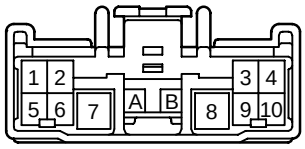
90980–10721	90980–10801	90980–10822
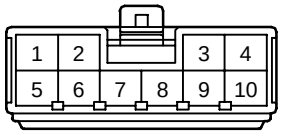	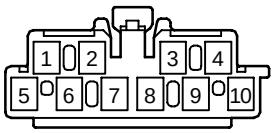	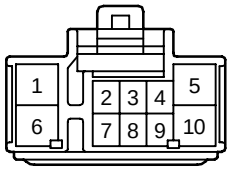
90980–10862	90980–10965	90980–10993
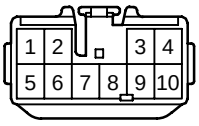	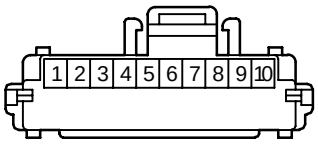	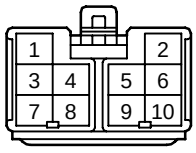
90980–10997	90980–11116	90980–11276
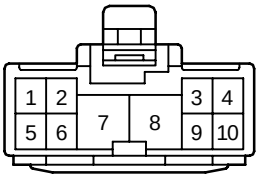	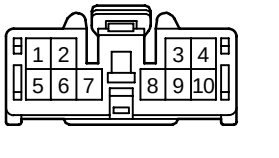	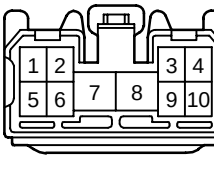
90980–11366	90980–11450	90980–11527

<FEMALE> 10P Non–waterproof Type

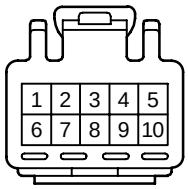	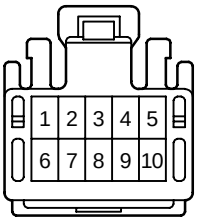	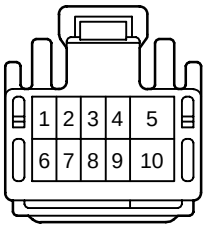
90980–11537	90980–11581	90980–11614
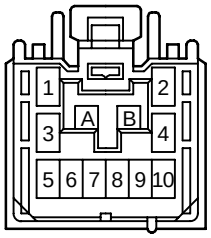	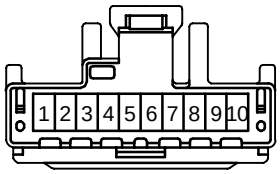	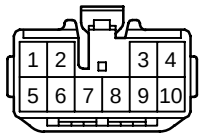
90980–11642	90980–11657	90980–11781
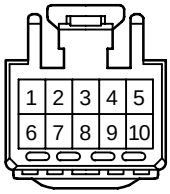	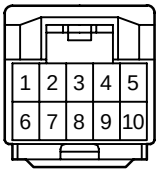	
90980–11817	90980–11923	90980–11924
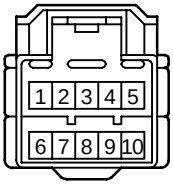	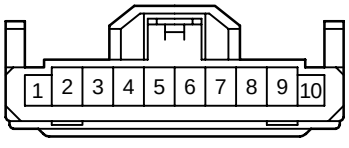	
90980–11948	90980–12008	90980–12135

<FEMALE> 10P Non–waterproof Type

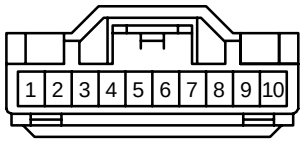	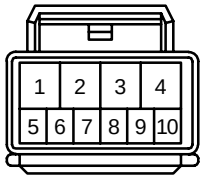	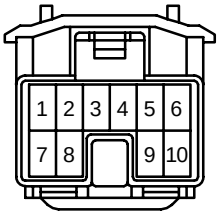
90980–12162	90980–12226	90980–12272

<FEMALE> 11P Non–waterproof Type

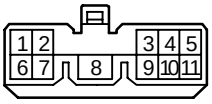	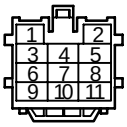	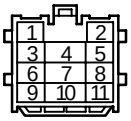
90980–10319	90980–10337	90980–10338
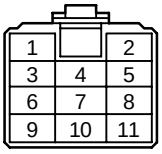	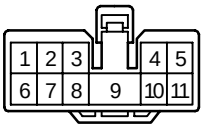	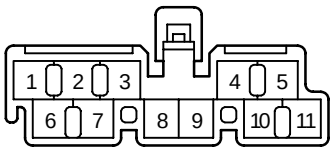
90980–10450	90980–10537	90980–10723
	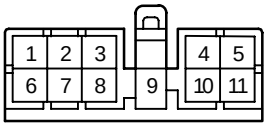	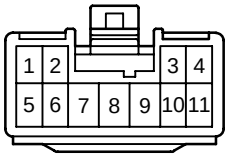
90980–10727	90980–10781	90980–10830
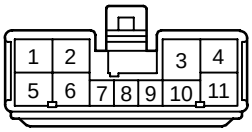	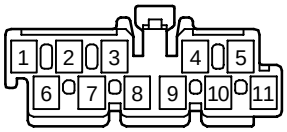	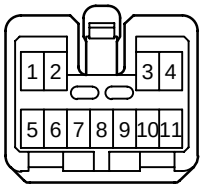
90980–10873	90980–10966	90980–11041

<FEMALE> 11P Non–waterproof Type

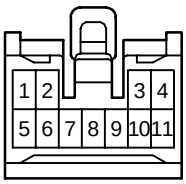	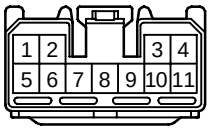	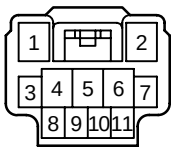
90980–11083	90980–11539	90980–12003

<FEMALE> 12P Non–waterproof Type

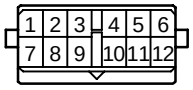	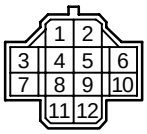	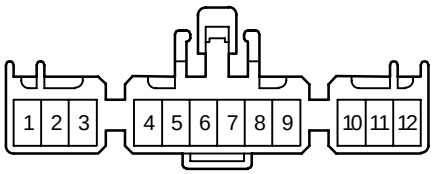
90980–10006	90980–10150	90980–10153
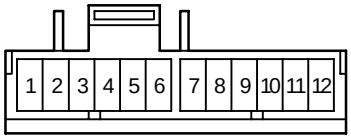	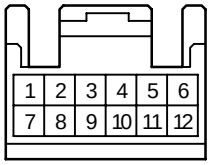	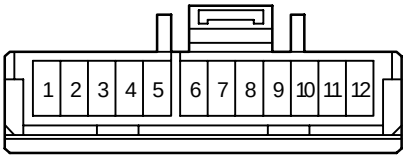
90980–10303	90980–10351	90980–10372
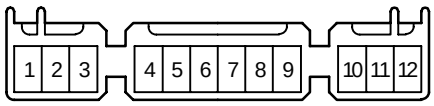	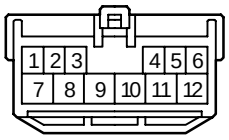	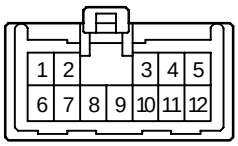
90980–10397	90980–10406	90980–10408
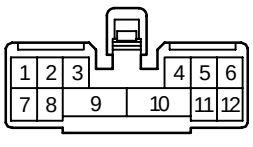	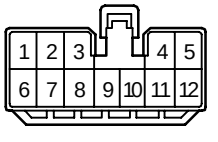	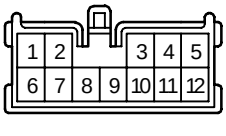
90980–10421	90980–10432	90980–10524

<FEMALE> 12P Non–waterproof Type

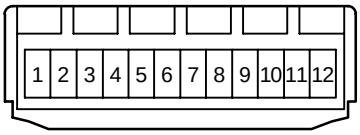 90980–10565	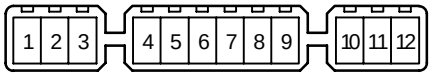 90980–10632	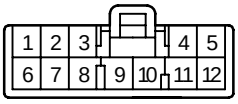 90980–10658
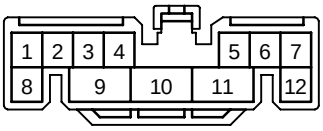 90980–10714	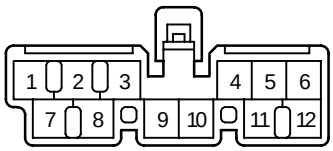 90980–10724	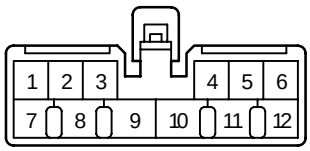 90980–10725
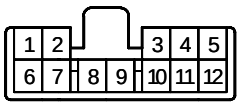 90980–10743	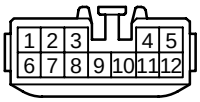 90980–10803	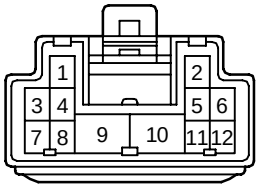 90980–10879
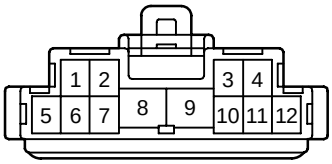 90980–10932	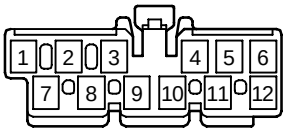 90980–10967	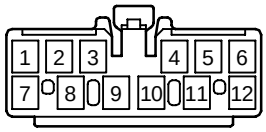 90980–10968

<FEMALE> 12P Non–waterproof Type

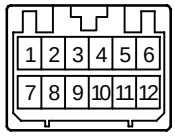	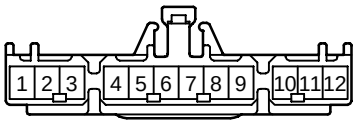	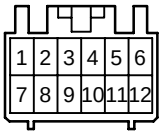
90980–10973	90980–11121	90980–11129
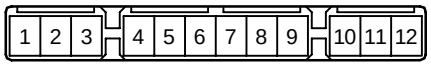	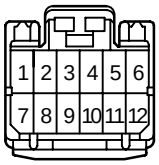	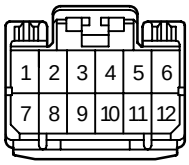
90980–11311	90980–11408	90980–11424
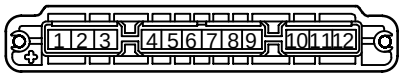	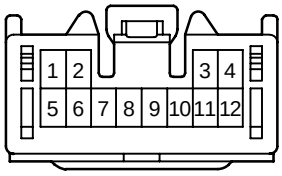	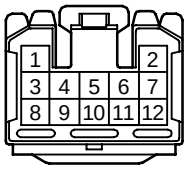
90980–11453	90980–11475	90980–11531
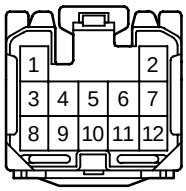	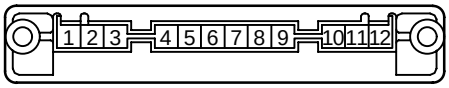	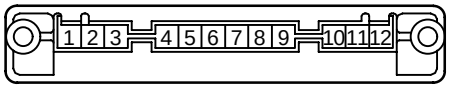
90980–11626	90980–11649	90980–11656

<FEMALE> 12P Non–waterproof Type

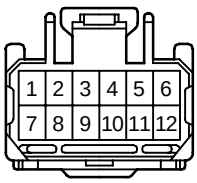	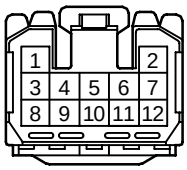	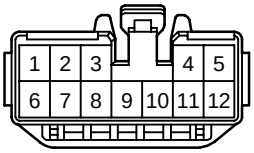
90980–11661	90980–11693	90980–11720
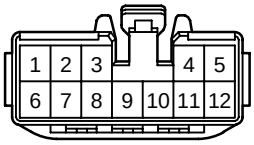	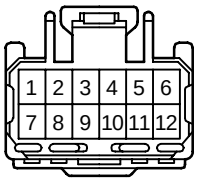	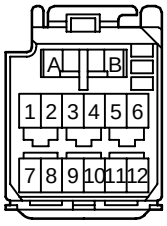
90980–11782	90980–11847	90980–11867
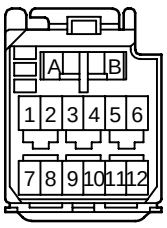	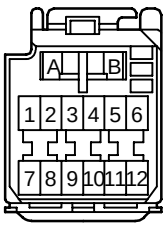	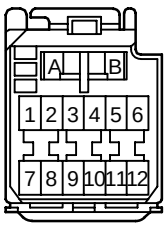
90980–11869	90980–11871	90980–11873
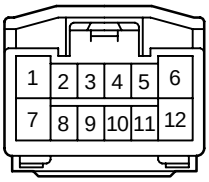	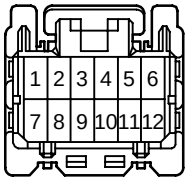	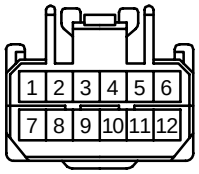
90980–11947	90980–12032	90980–12090

<FEMALE> 12P Non–waterproof Type

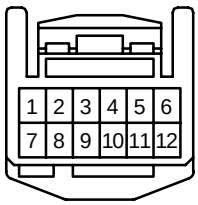	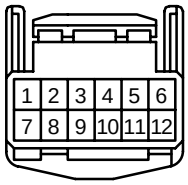	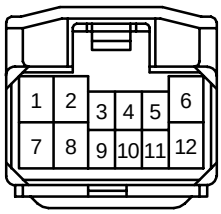
90980–12183	90980–12222	90980–12273

<FEMALE> 13P Non–waterproof Type

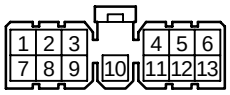	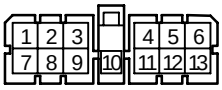	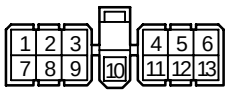
90980–10033	90980–10062	90980–10132
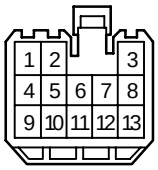	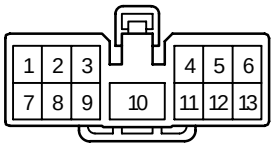	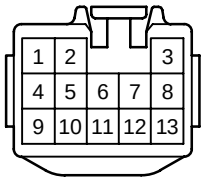
90980–10324	90980–10480	90980–10805
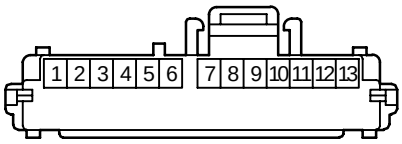	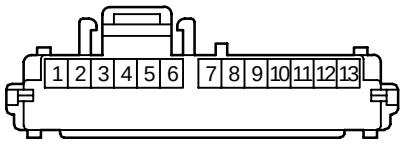	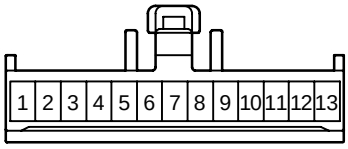
90980–11114	90980–11115	90980–11199
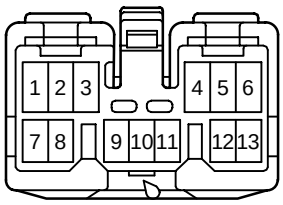	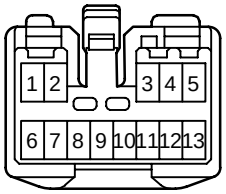	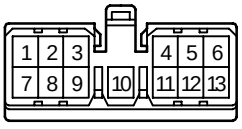
90980–11350	90980–11394	90980–11478

<FEMALE> 13P Non–waterproof Type

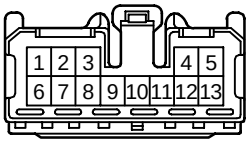	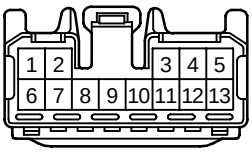	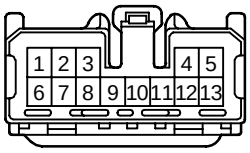
90980–11542	90980–11604	90980–11695
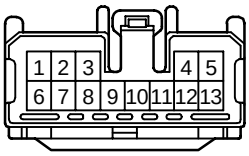	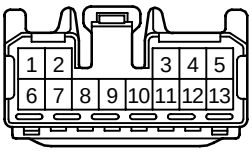	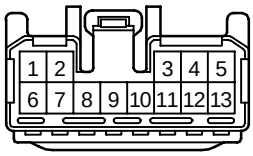
90980–11714	90980–11827	90980–11848
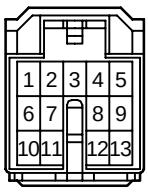	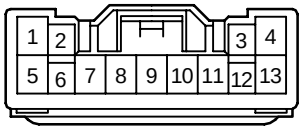	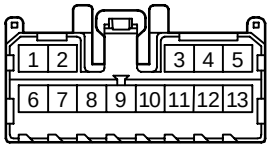
90980–11952	90980–12007	90980–12027

<FEMALE> 14P Non–waterproof Type

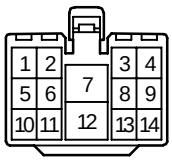

90980–10330

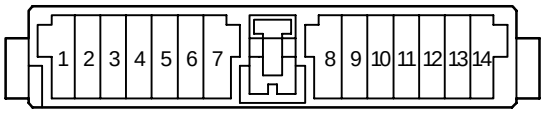

90980–10368

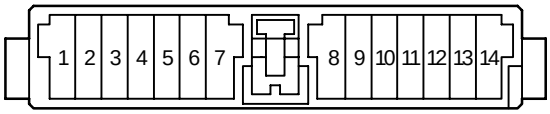

90980–10369

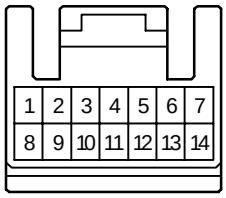

90980–10371

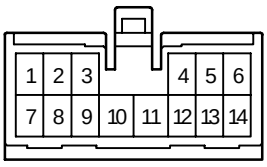

90980–10471

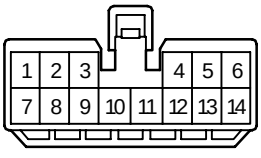

90980–10507

<FEMALE> 14P Non–waterproof Type

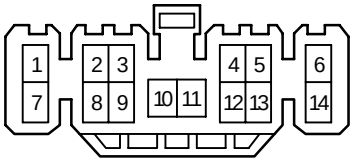

90980–10538

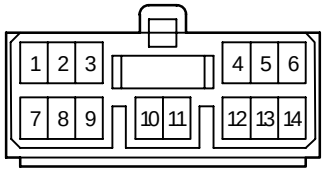

90980–10608

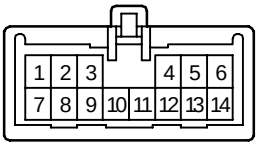

90980–10633

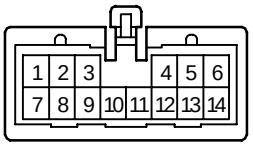

90980–10634

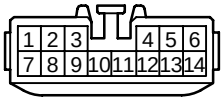

90980–10807
90980–11437

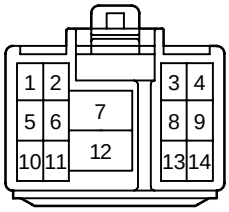

90980–10813

<FEMALE> 14P Non–waterproof Type

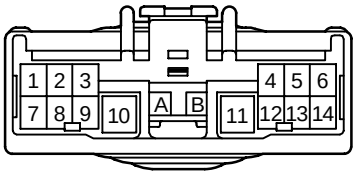

90980–10852

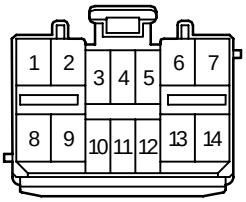

90980–11225

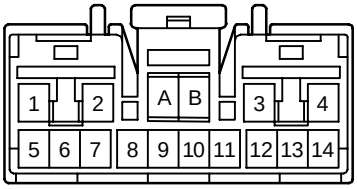

90980–11383

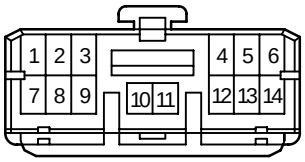

90980–11433

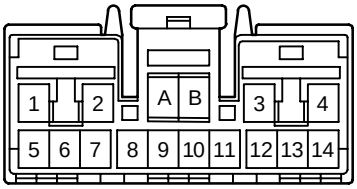

90980–11465

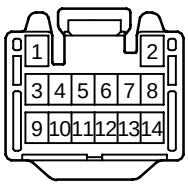

90980–11511

<FEMALE> 14P Non–waterproof Type

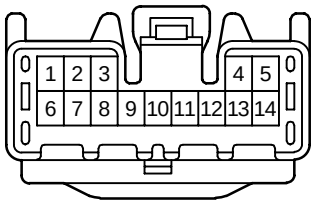

90980–11556

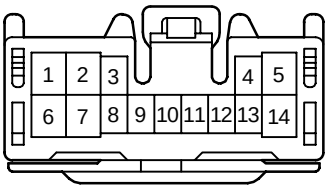

90980–11591

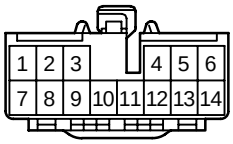

90980–11791

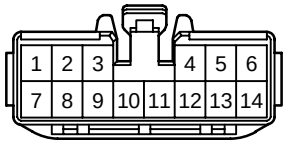

90980–11805

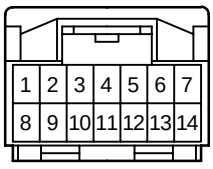

90980–11911

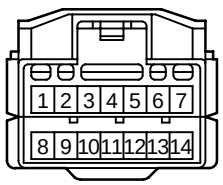

90980–11925

<FEMALE> 14P Non–waterproof Type

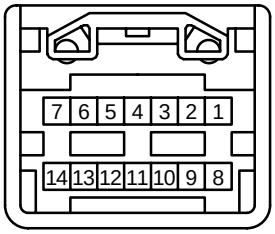 90980–12082	

<FEMALE> 15P Non–waterproof Type

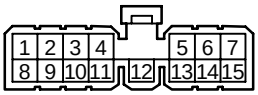

90980–10066

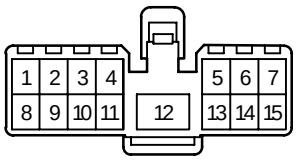

90980–10331

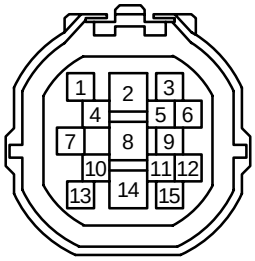

90980–10443

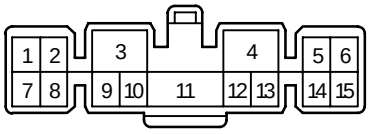

90980–10563

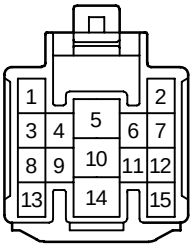

90980–10815

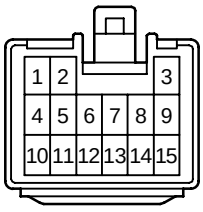

90980–10828

<FEMALE> 15P Non–waterproof Type

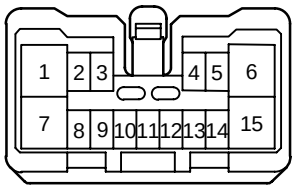

90980–11042

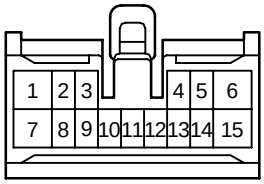

90980–11056

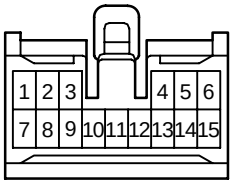

90980–11179

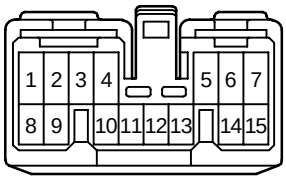

90980–11264

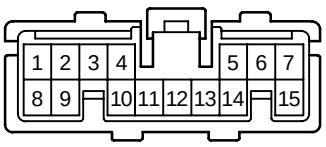

90980–11372

<FEMALE> 16P Non–waterproof Type

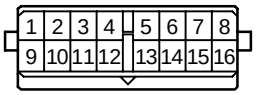

90980–10008

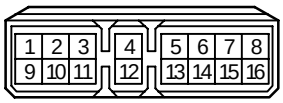

90980–10028

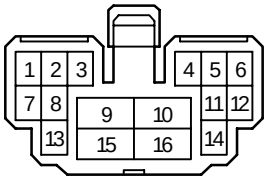

90980–10454

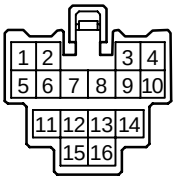

90980–10486

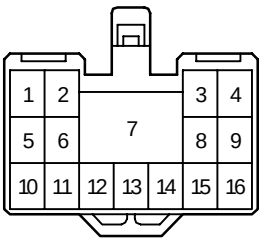

90980–10522

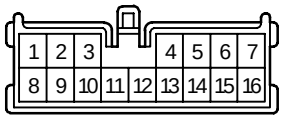

90980–10525

<FEMALE> 16P Non–waterproof Type

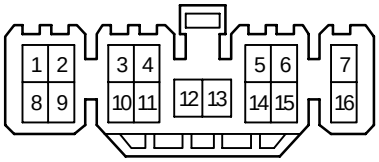

90980–10539

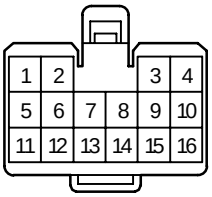

90980–10543

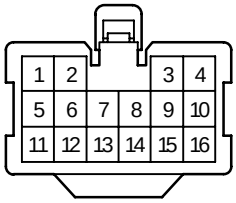

90980–10561

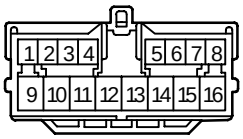

90980–10611

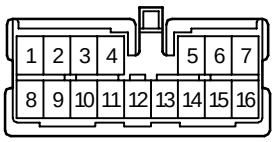

90980–10613

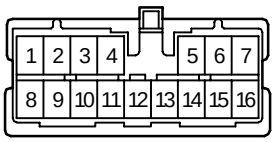

90980–10614

<FEMALE> 16P Non–waterproof Type

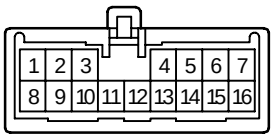

90980–10635

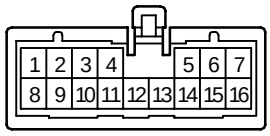

90980–10636

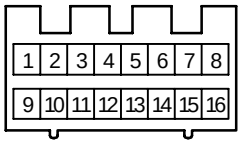

90980–10740

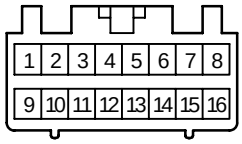

90980–10764

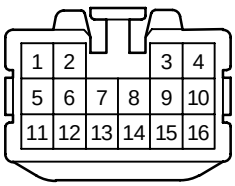

90980–10809
90980–11445

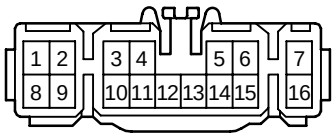

90980–10848

<FEMALE> 16P Non–waterproof Type

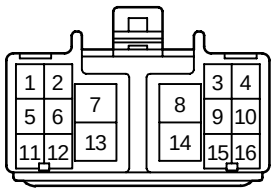

90980–10885

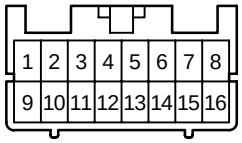

90980–11082

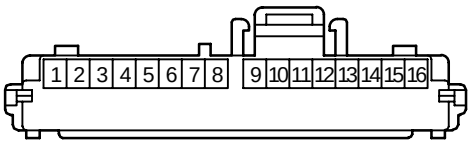

90980–11113

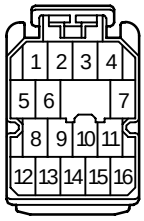

90980–11219

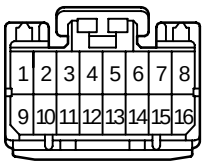

90980–11391

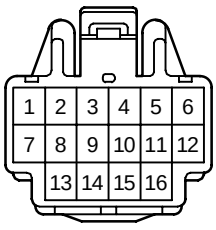

90980–11416

<FEMALE> 16P Non–waterproof Type

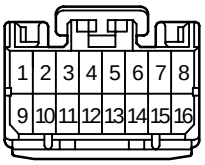

90980–11425

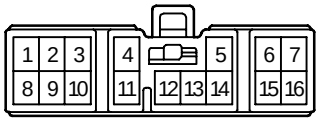

90980–11435

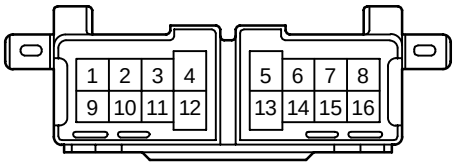

90980–11547

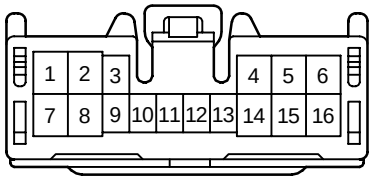

90980–11562

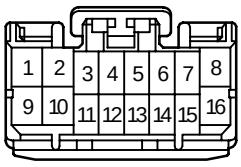

90980–11565

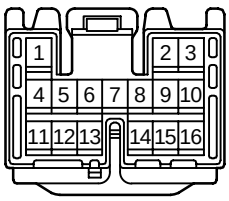

90980–11574

<FEMALE> 16P Non–waterproof Type

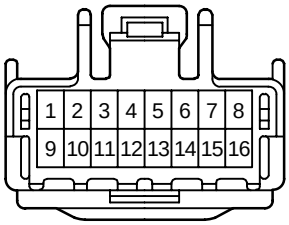

90980–11648

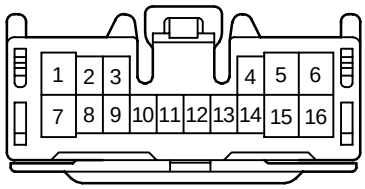

90980–11652

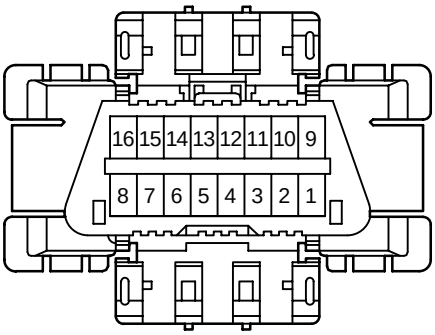

90980–11665
90980–11978

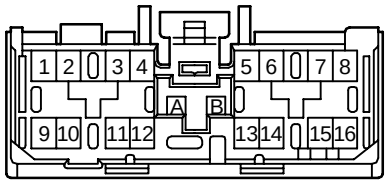

90980–11681

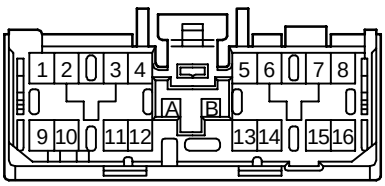

90980–11683

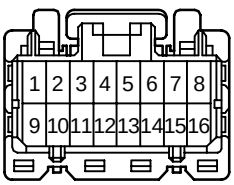

90980–11787

<FEMALE> 16P Non–waterproof Type

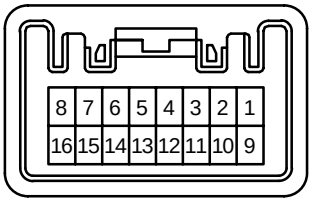

90980–12093

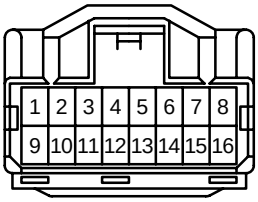

90980–12094

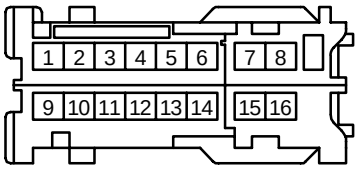

90980–12101

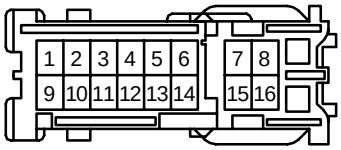

90980–12104

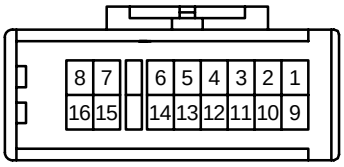

90980–12105

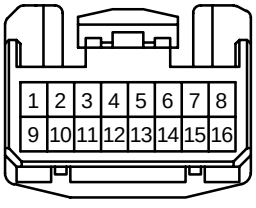

90980–12155

<FEMALE> 16P Non–waterproof Type

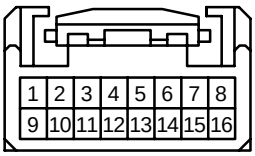

90980–12156

<FEMALE> 17P Non–waterproof Type

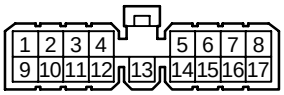

90980–10031

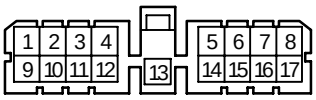

90980–10037

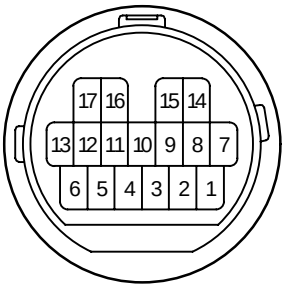

90980–10731
90980–11417
90980–11420

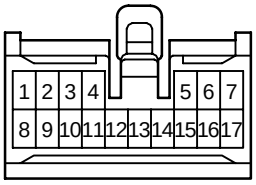

90980–11203

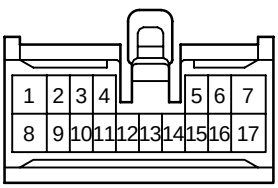

90980–11310

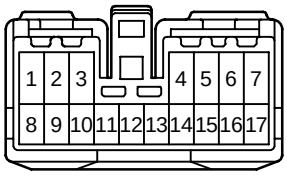

90980–11335

<FEMALE> 17P Non–waterproof Type

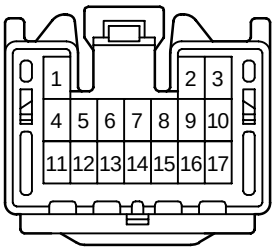

90980–11506

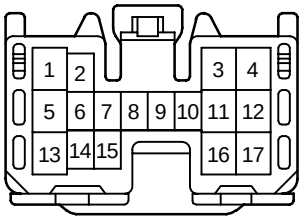

90980–11560

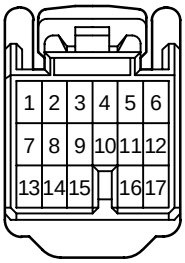

90980–11586

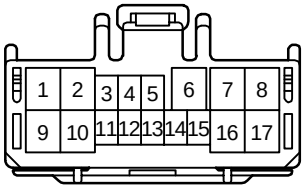

90980–11671

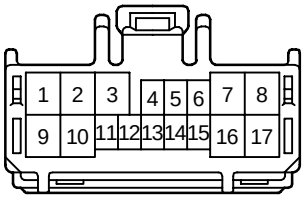

90980–11672

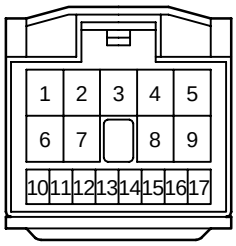

90980–11954

<FEMALE> 18P Non–waterproof Type

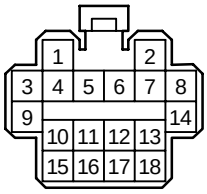

90980–10285

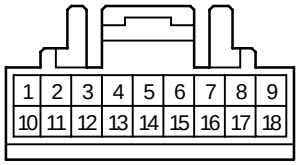

90980–10295

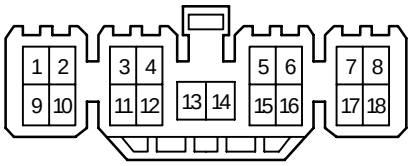

90980–10326

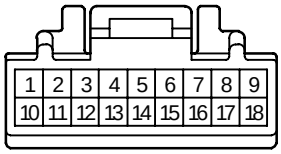

90980–10350

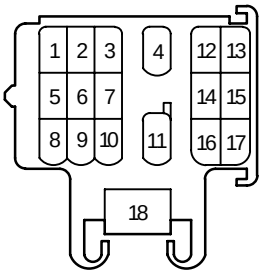

90980–10530

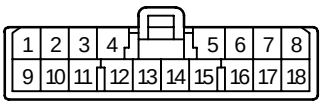

90980–10656

<FEMALE> 18P Non–waterproof Type

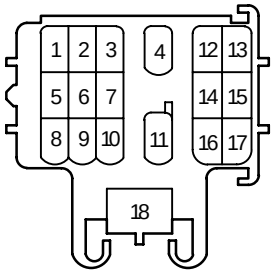

90980–10778

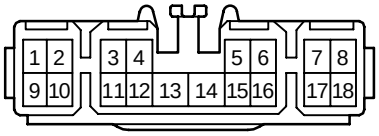

90980–10819

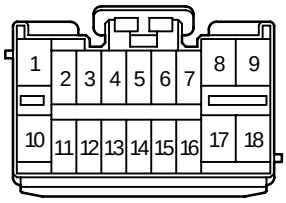

90980–11224

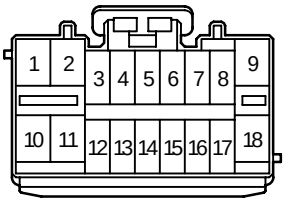

90980–11226

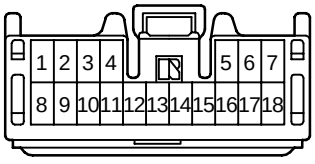

90980–11497

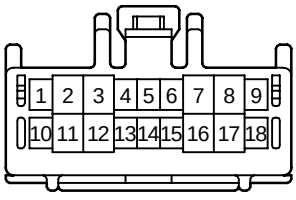

90980–11594

<FEMALE> 18P Non–waterproof Type

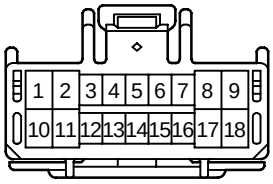

90980–11595

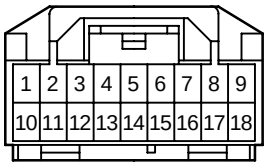

90980–11913

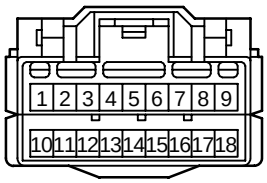

90980–11914

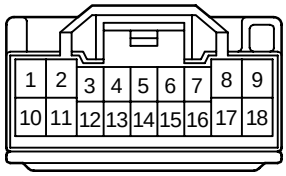

90980–11973

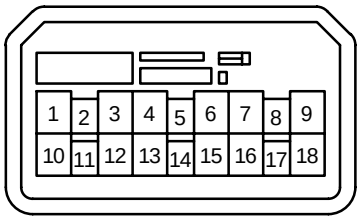

90980–12122

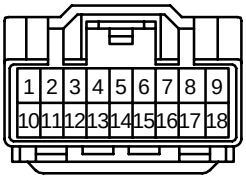

90980–12174

<FEMALE> 19P Non–waterproof Type

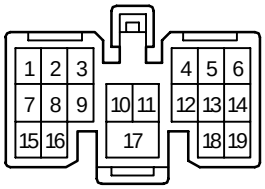

90980–10675

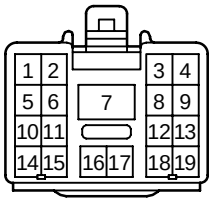

90980–10857

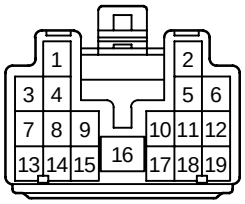

90980–10883

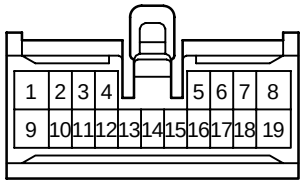

90980–11205

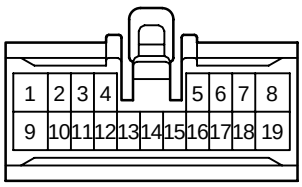

90980–11308

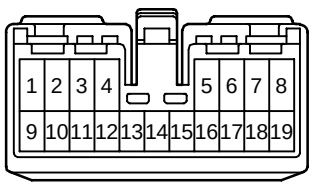

90980–11377

<FEMALE> 19P Non–waterproof Type

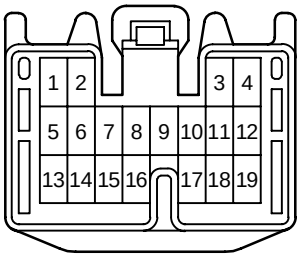

90980–11571

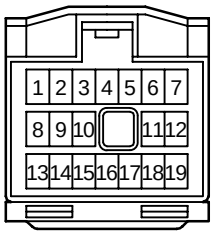

90980–11955

<FEMALE> 20P Non–waterproof Type

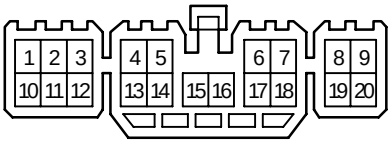

90980–10327

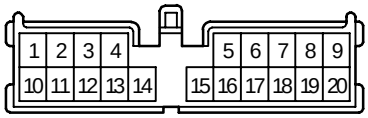

90980–10589

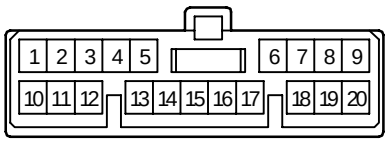

90980–10607

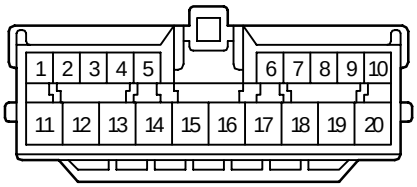

90980–10612

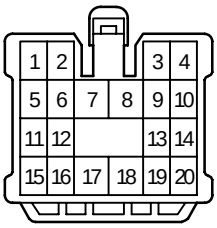

90980–10640

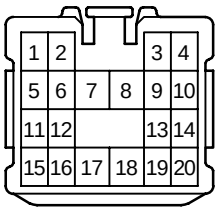

90980–10811
90980–11441

<FEMALE> 20P Non–waterproof Type

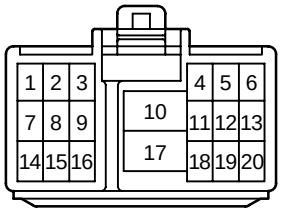

90980–10817

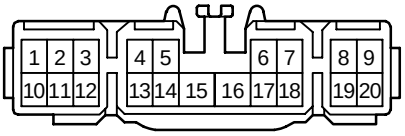

90980–10821

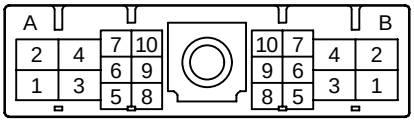

90980–10952

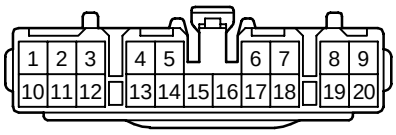

90980–11260

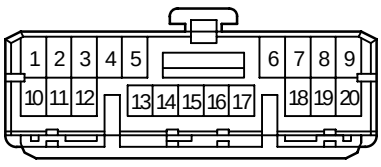

90980–11432

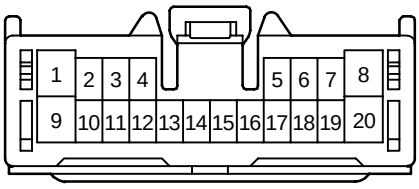

90980–11469

<FEMALE> 20P Non–waterproof Type

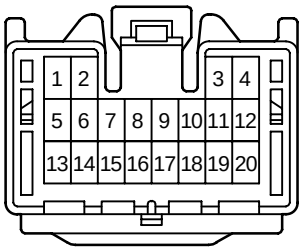

90980–11499

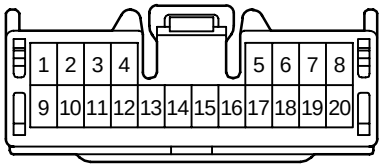

90980–11558

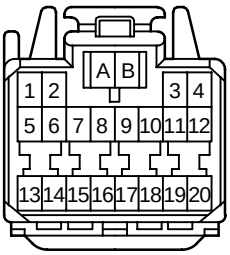

90980–11868

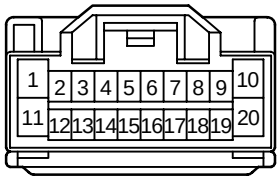

90980–11971

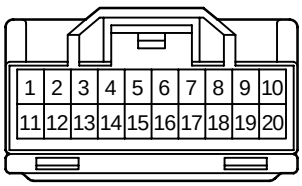

90980–11974

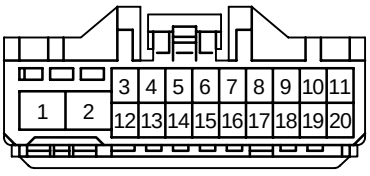

90980–12034

<FEMALE> 20P Non–waterproof Type

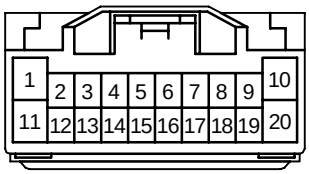

90980–12038

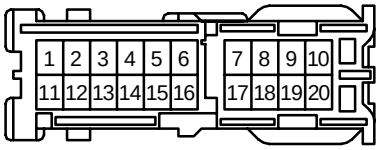

90980–12106

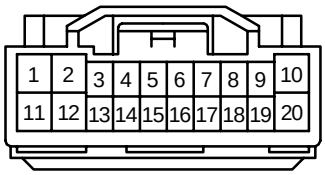

90980–12166

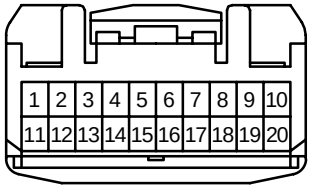

90980–12259

<FEMALE> 21P Non–waterproof Type

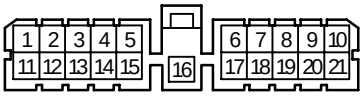

90980–10064

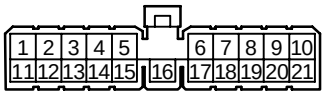

90980–10207

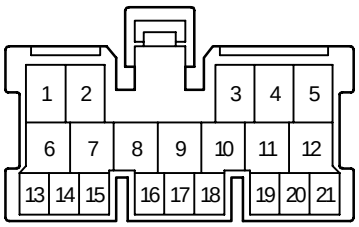

90980–10473

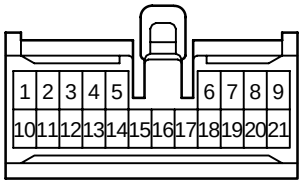

90980–11125

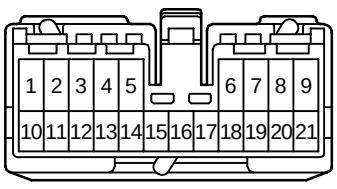

90980–11379

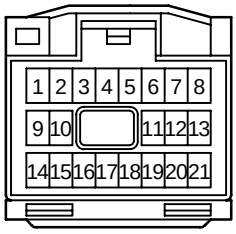

90980–11956

<FEMALE> 21P Non–waterproof Type

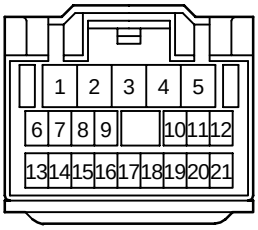

90980–11957

<FEMALE> 22P Non–waterproof Type

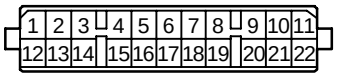

90980–10010

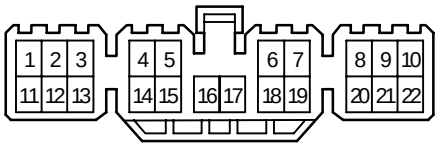

90980–10328

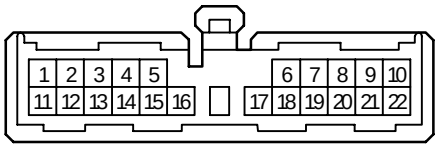

90980–10456

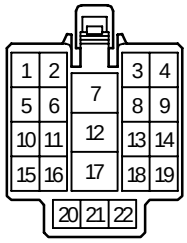

90980–10458

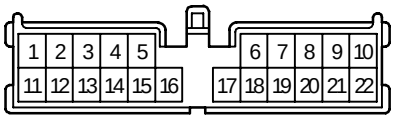

90980–10526

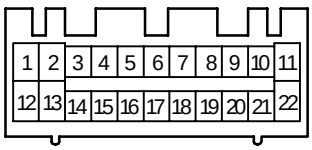

90980–10741

<FEMALE> 22P Non–waterproof Type

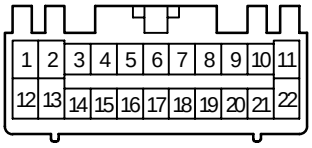

90980–10765

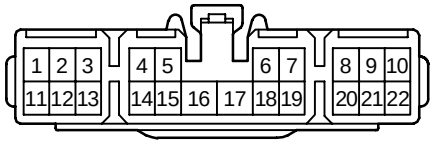

90980–10875

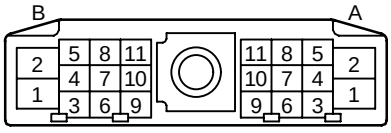

90980–10953

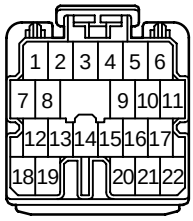

90980–11220

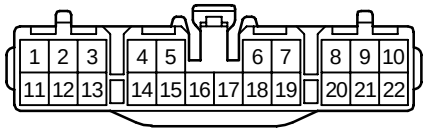

90980–11238

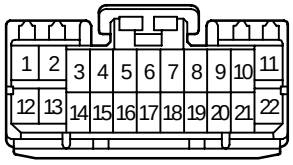

90980–11392

<FEMALE> 22P Non–waterproof Type

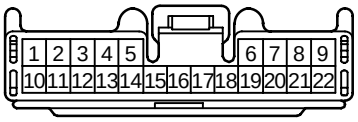

90980–11502

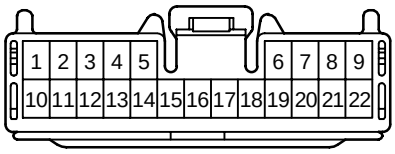

90980–11628

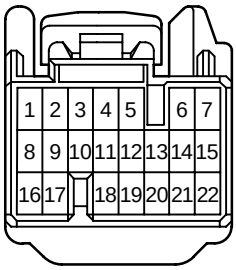

90980–11638

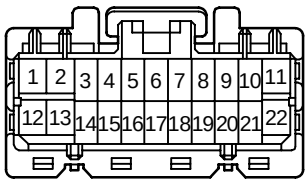

90980–11788

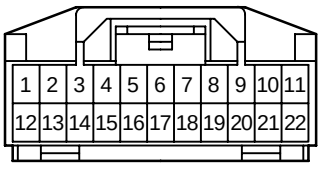

90980–11915

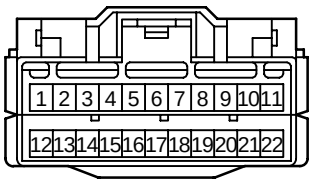

90980–11927

<FEMALE> 23P Non–waterproof Type

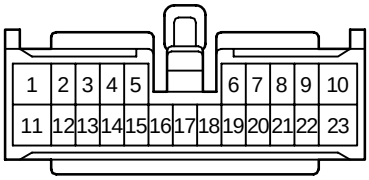

90980–10921

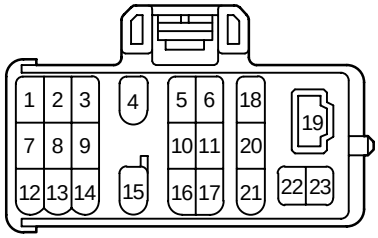

90980–11195

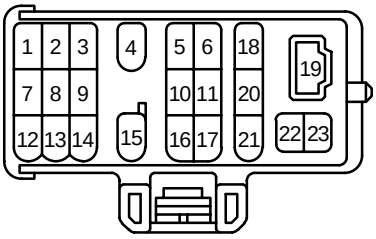

90980–11323

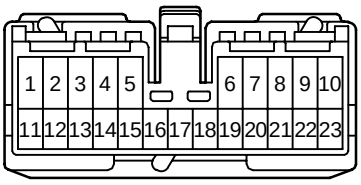

90980–11381

<FEMALE> 24P Non–waterproof Type

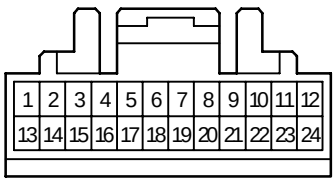

90980–10296

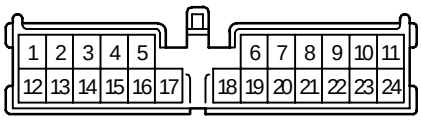

90980–10585

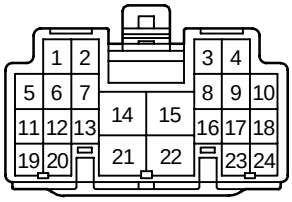

90980–10881

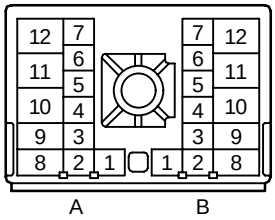

90980–10955

<FEMALE> 24P Non–waterproof Type

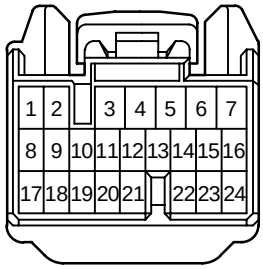

90980–11476

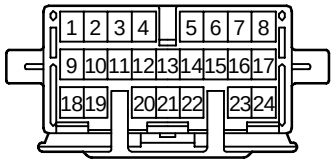

90980–11509

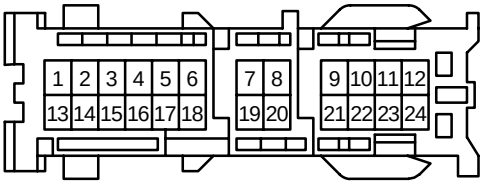

90980–12070

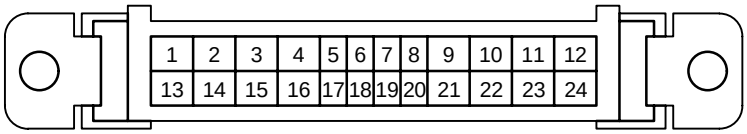

90980–12079

<FEMALE> 24P Non–waterproof Type

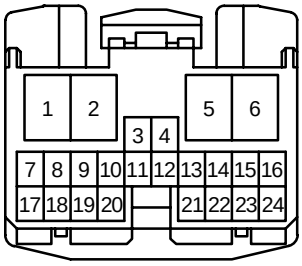

90980–12149

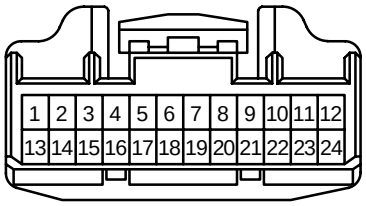

90980–12200

<FEMALE> 25P Non–waterproof Type

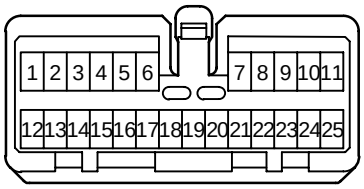

90980–11043

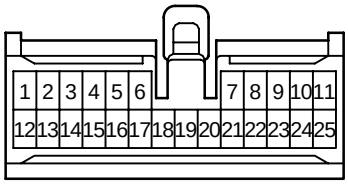

90980–11055

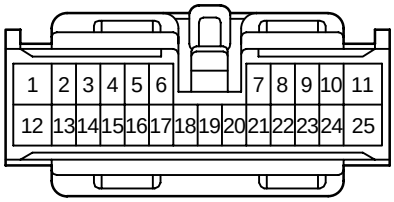

90980–11058

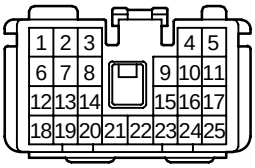

90980–11375

<FEMALE> 25P Non–waterproof Type

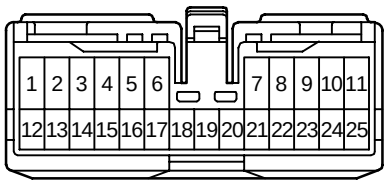

90980–11404

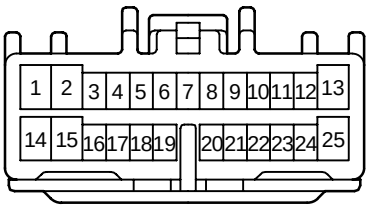

90980–11877

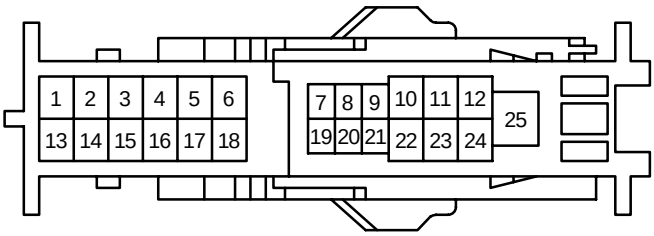

90980–12278

<FEMALE> 26P Non–waterproof Type

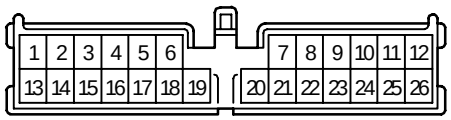

90980–10587

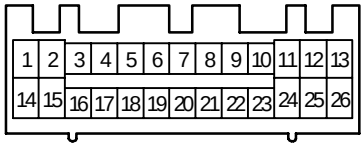

90980–10739

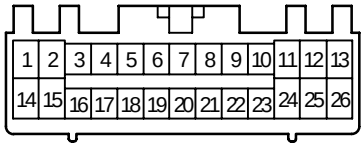

90980–10763

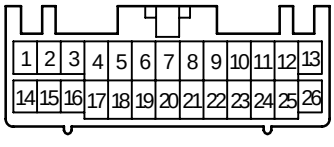

90980–10918

<FEMALE> 26P Non–waterproof Type

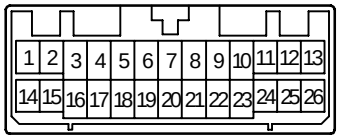

90980–10925

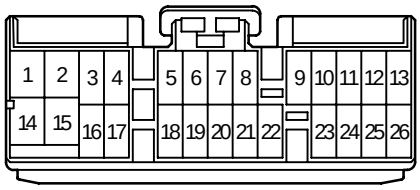

90980–11234

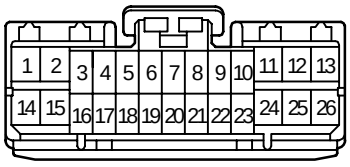

90980–11390

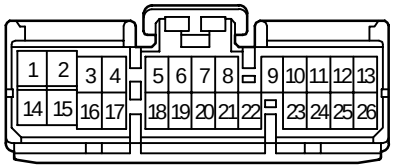

90980–11406

<FEMALE> 26P Non–waterproof Type

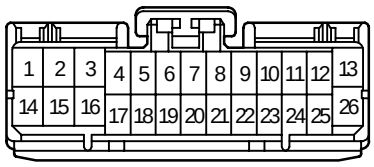

90980–11422

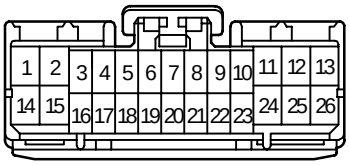

90980–11423

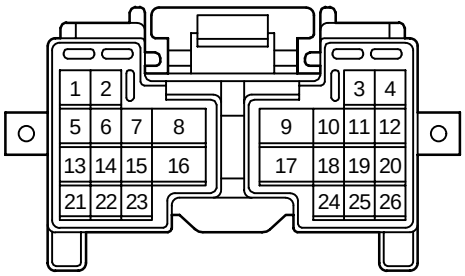

90980–11611

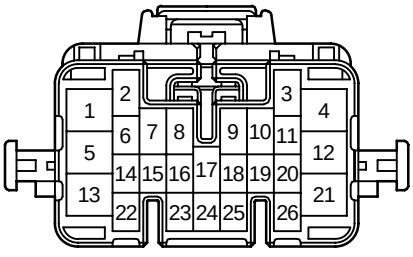

90980–11632

<FEMALE> 26P Non–waterproof Type

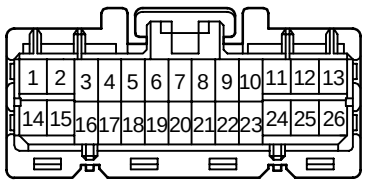

90980–11786

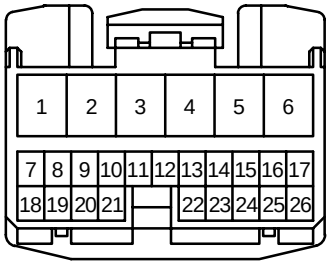

90980–12150

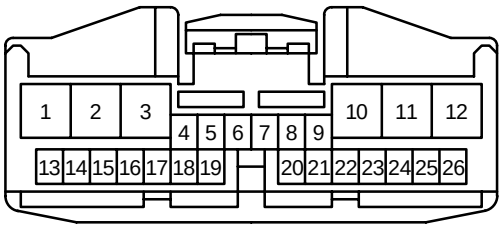

90980–12203

<FEMALE> 27P Non–waterproof Type

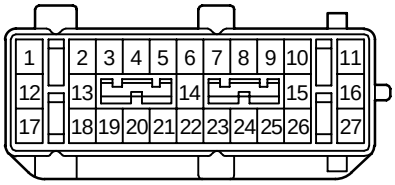

90980–11670

<FEMALE> 28P Non–waterproof Type

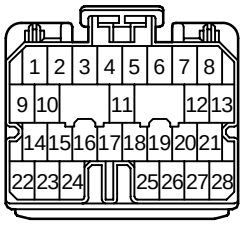

90980–11218

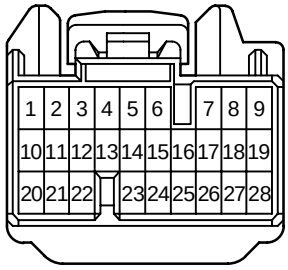

90980–11637

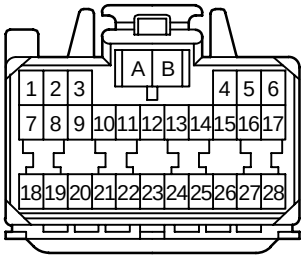

90980–11872

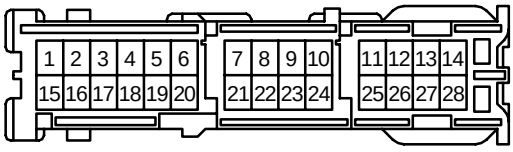

90980–12102

<FEMALE> 30P Non–waterproof Type

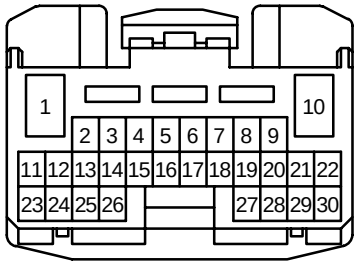

90980–12151

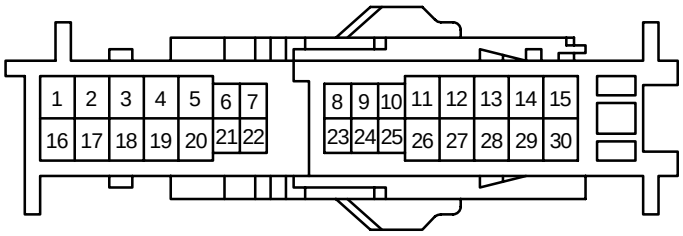

90980–12277

<FEMALE> 31P Non–waterproof Type

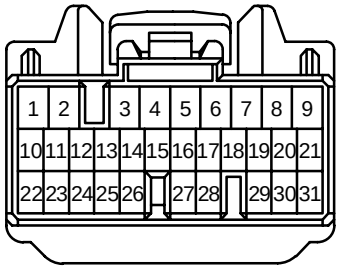

90980–11421

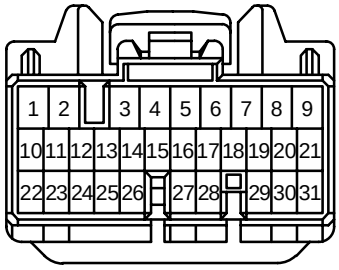

90980–11935

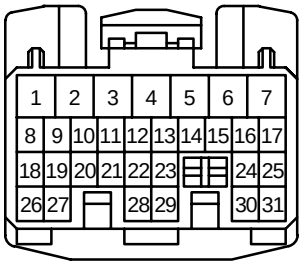

90980–12142

<FEMALE> 32P Non–waterproof Type

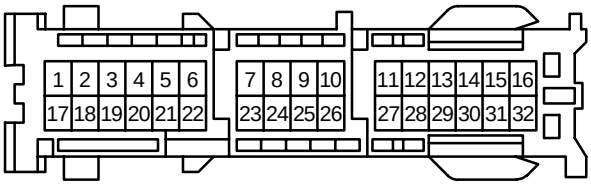

90980–12071

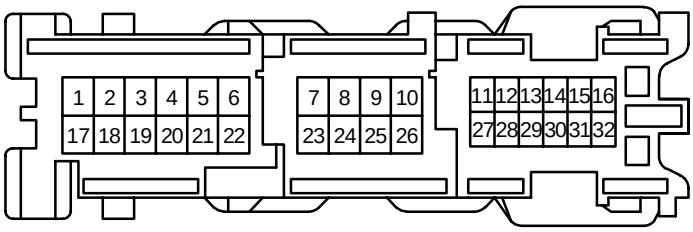

90980–12096

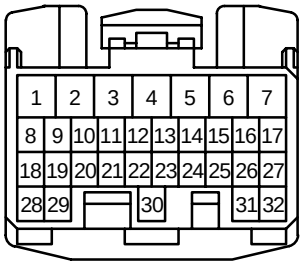

90980–12143

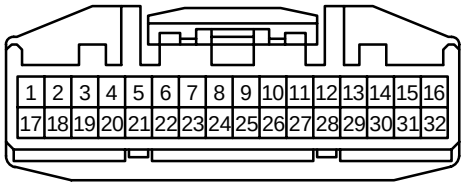

90980–12153

<FEMALE> 32P Non–waterproof Type

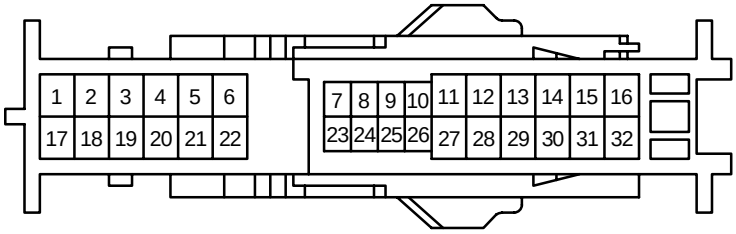

90980–12275

<FEMALE> 34P Non–waterproof Type

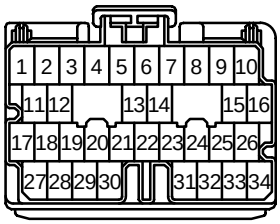

90980–11221

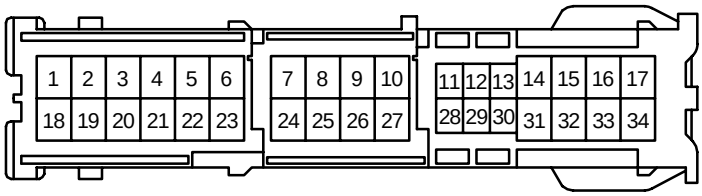

90980–12114

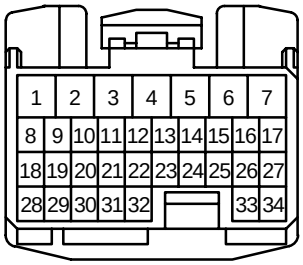

90980–12144

<FEMALE> 35P, 36P Non–waterproof Type

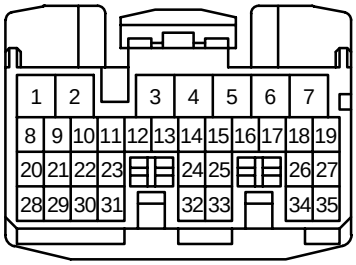

90980–12145

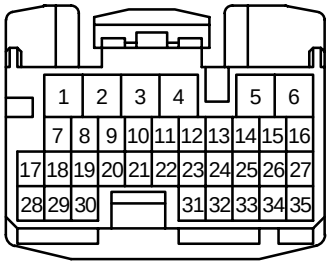

90980–12146

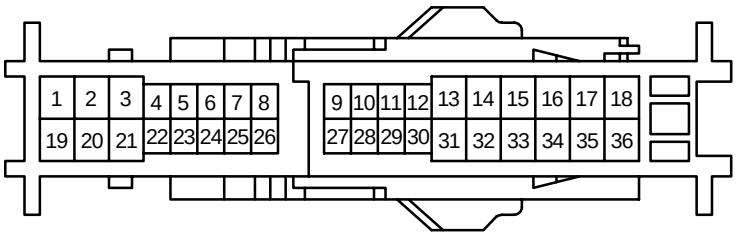

90980–12274

<FEMALE> 38P Non–waterproof Type

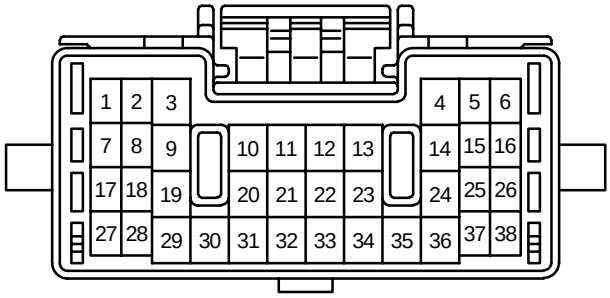

90980–11555

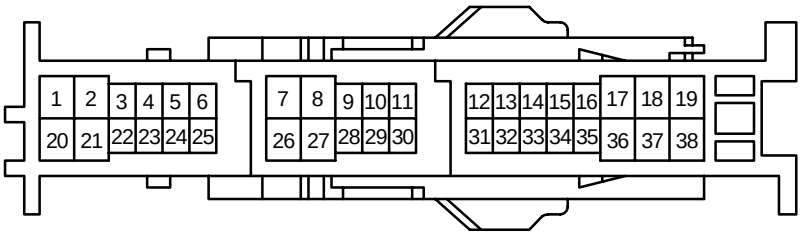

90980–12276

<FEMALE> 40P Non–waterproof Type

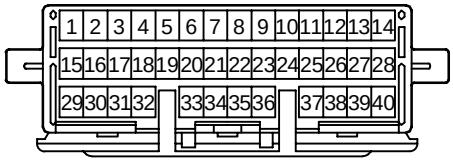

90980–11508

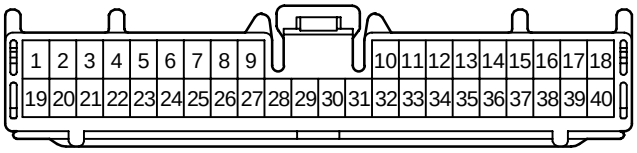

90980–11618

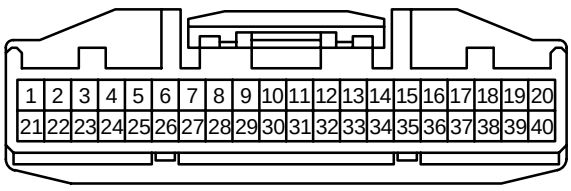

90980–12169

<FEMALE> 40P Non–waterproof Type

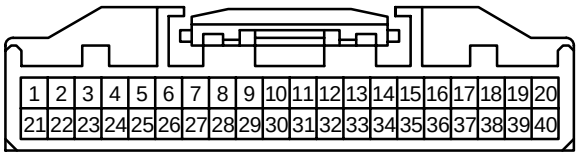

90980–12170

<FEMALE> 42P, 43P, 46P Non–waterproof Type

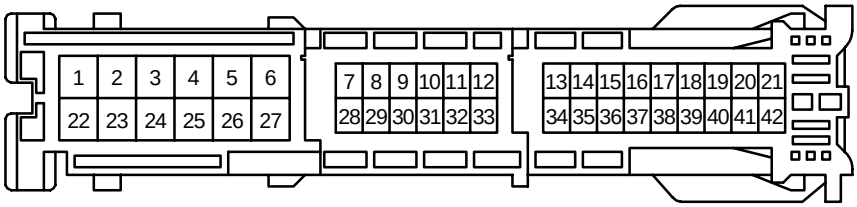

90980–12184

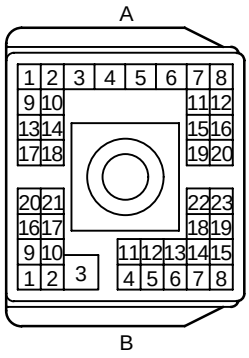

90980–11360

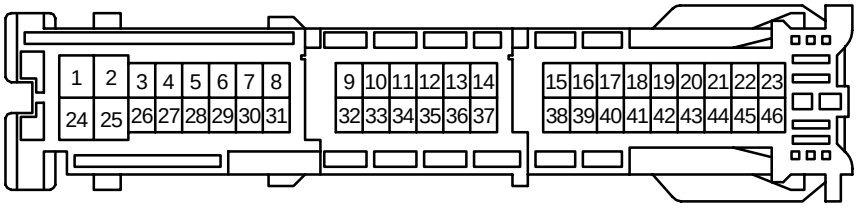

90980–12179

<FEMALE> 49P, 55P, 83P Non–waterproof Type

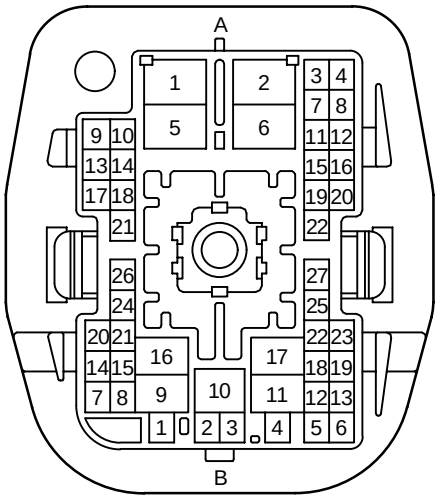

90980–11431

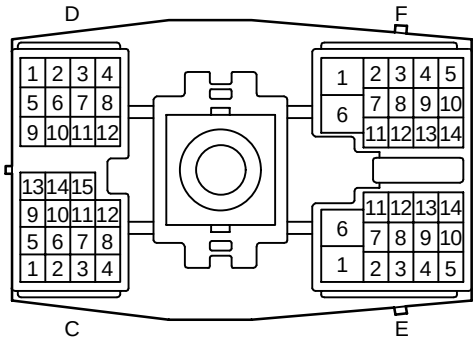

90980–11359

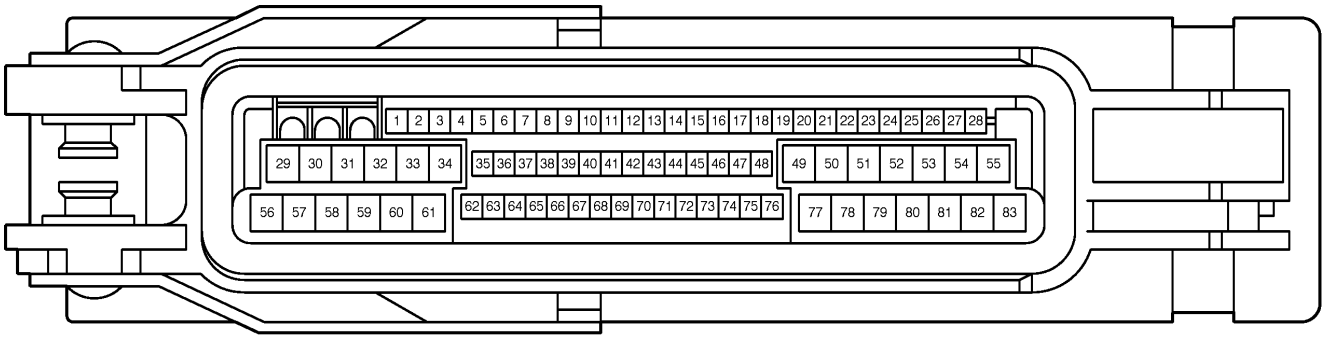

90980–11906

<FEMALE> 88P Non–waterproof Type

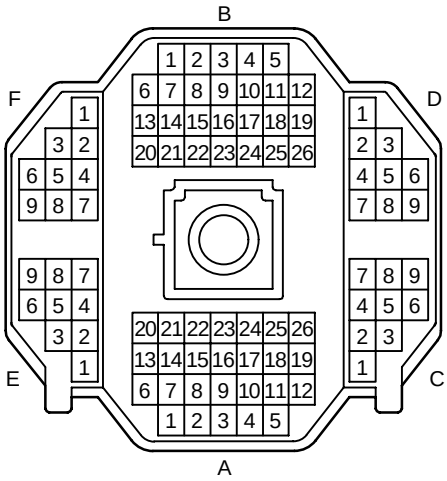

90980–10950

<FEMALE> 10P Non–waterproof Type

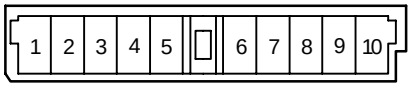 90980–10158	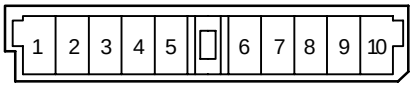 90980–10159	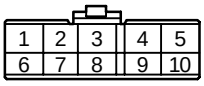 90980–10177
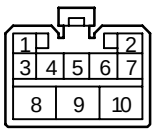 90980–10282	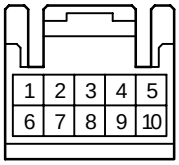 90980–10294	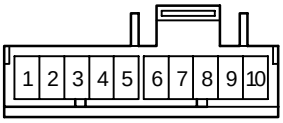 90980–10302
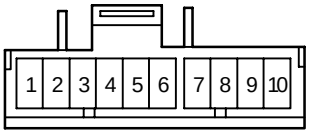 90980–10304	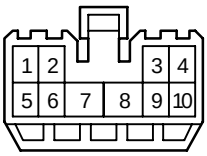 90980–10322	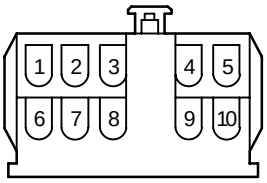 90980–10377
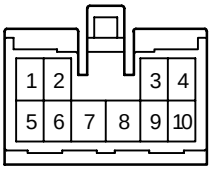 90980–10469	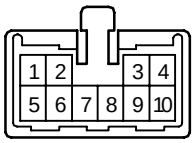 90980–10528	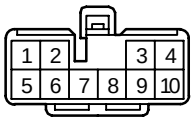 90980–10669

<FEMALE> 10P Non–waterproof Type

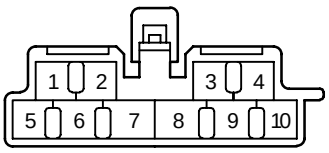	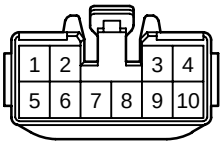	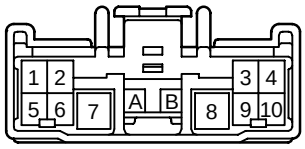
90980–10721	90980–10801	90980–10822
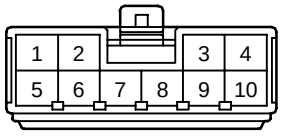	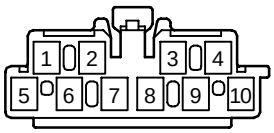	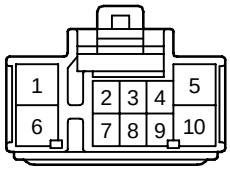
90980–10862	90980–10965	90980–10993
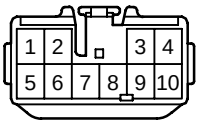	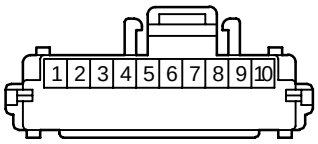	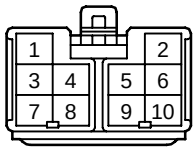
90980–10997	90980–11116	90980–11276
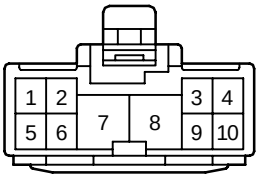	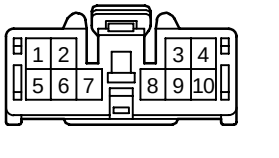	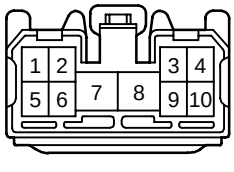
90980–11366	90980–11450	90980–11527

<FEMALE> 10P Non–waterproof Type

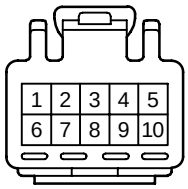	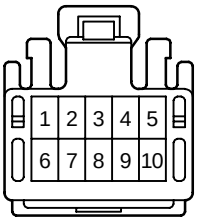	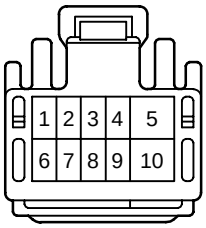
90980–11537	90980–11581	90980–11614
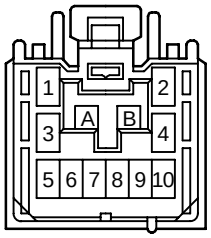	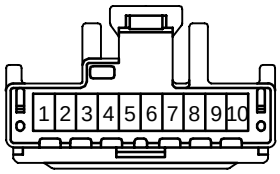	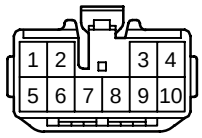
90980–11642	90980–11657	90980–11781
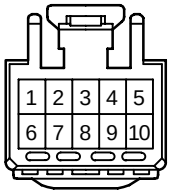	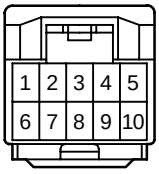	
90980–11817	90980–11923	90980–11924
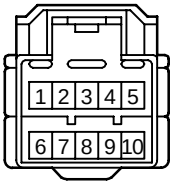	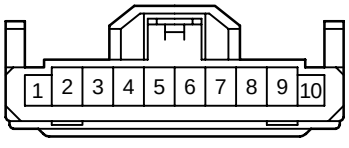	
90980–11948	90980–12008	90980–12135

<FEMALE> 10P Non–waterproof Type

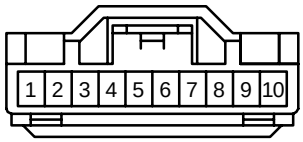	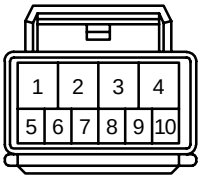	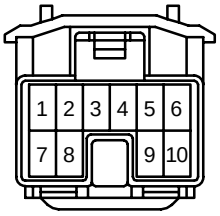
90980–12162	90980–12226	90980–12272

<FEMALE> 11P Non–waterproof Type

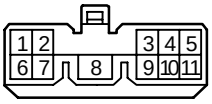	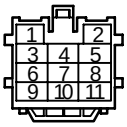	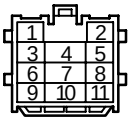
90980–10319	90980–10337	90980–10338
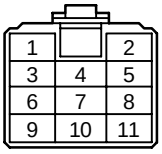	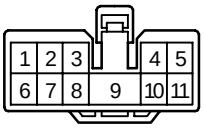	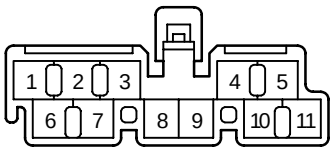
90980–10450	90980–10537	90980–10723
	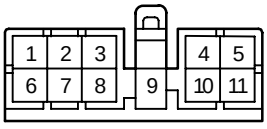	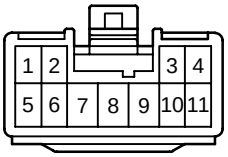
90980–10727	90980–10781	90980–10830
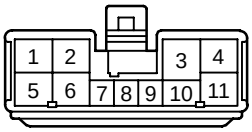	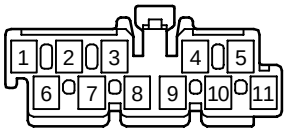	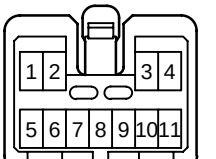
90980–10873	90980–10966	90980–11041

<FEMALE> 11P Non–waterproof Type

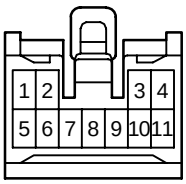	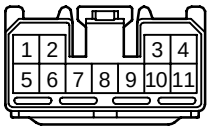	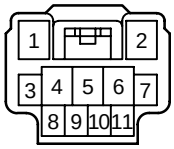
90980–11083	90980–11539	90980–12003

<FEMALE> 12P Non–waterproof Type

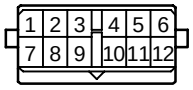	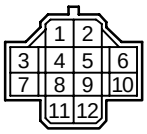	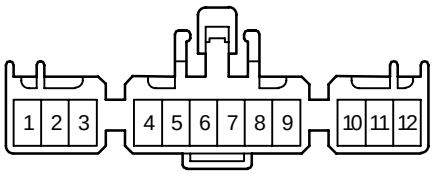
90980–10006	90980–10150	90980–10153
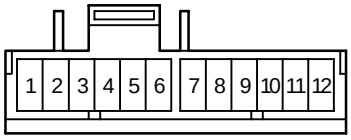	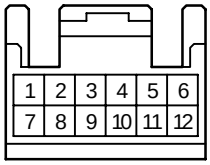	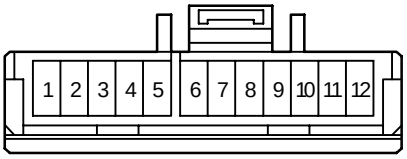
90980–10303	90980–10351	90980–10372
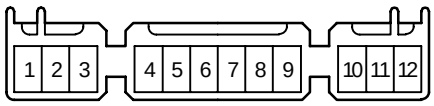	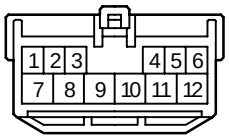	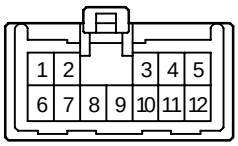
90980–10397	90980–10406	90980–10408
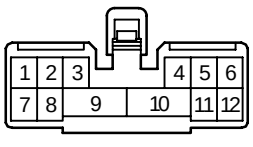	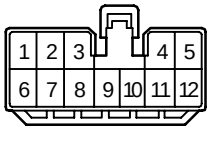	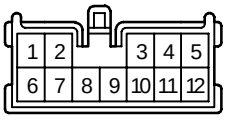
90980–10421	90980–10432	90980–10524

<FEMALE> 12P Non–waterproof Type

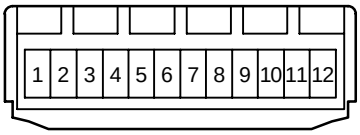 90980–10565	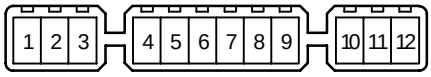 90980–10632	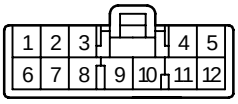 90980–10658
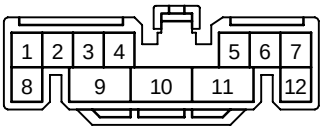 90980–10714	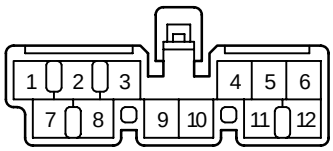 90980–10724	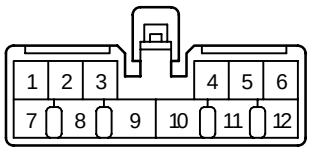 90980–10725
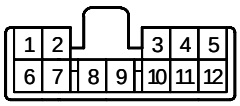 90980–10743	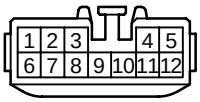 90980–10803	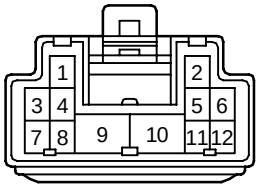 90980–10879
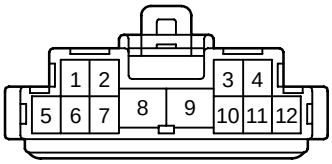 90980–10932	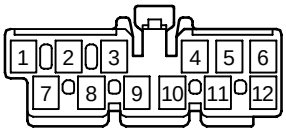 90980–10967	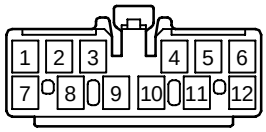 90980–10968

<FEMALE> 12P Non–waterproof Type

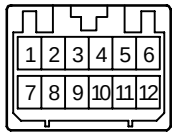	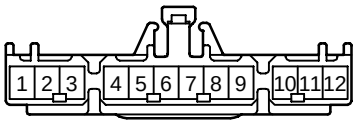	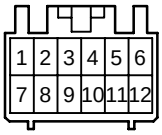
90980–10973	90980–11121	90980–11129
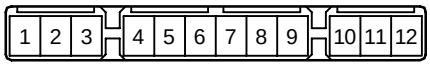	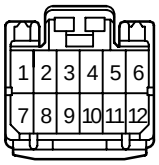	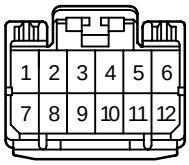
90980–11311	90980–11408	90980–11424
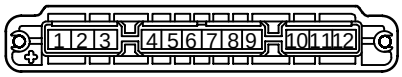	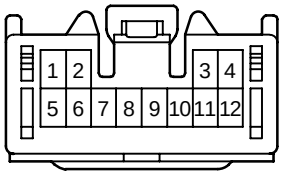	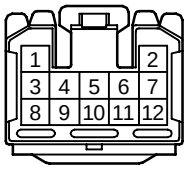
90980–11453	90980–11475	90980–11531
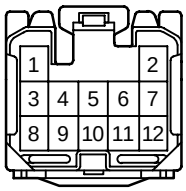	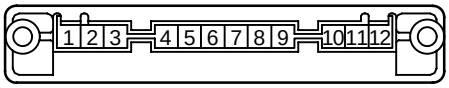	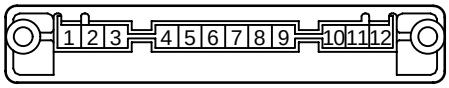
90980–11626	90980–11649	90980–11656

<FEMALE> 12P Non–waterproof Type

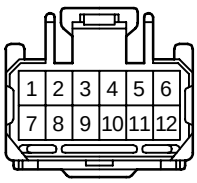	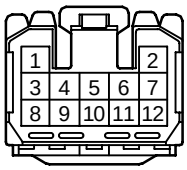	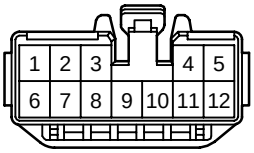
90980–11661	90980–11693	90980–11720
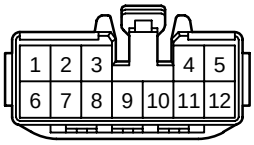	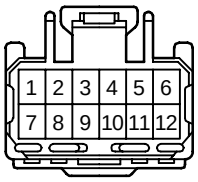	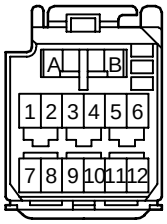
90980–11782	90980–11847	90980–11867
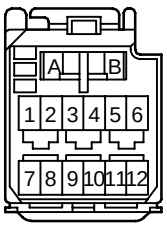	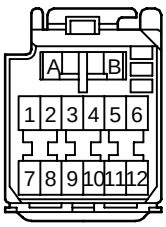	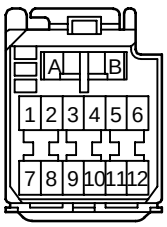
90980–11869	90980–11871	90980–11873
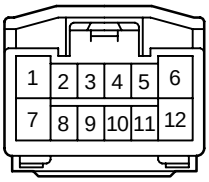	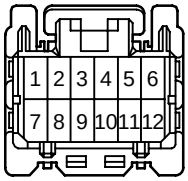	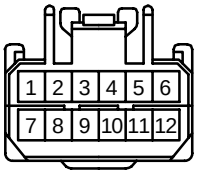
90980–11947	90980–12032	90980–12090

<FEMALE> 12P Non–waterproof Type

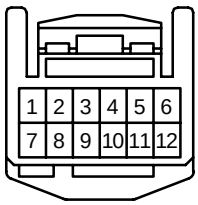	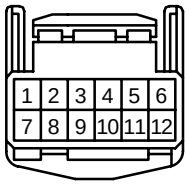	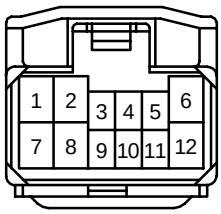
90980–12183	90980–12222	90980–12273

<FEMALE> 13P Non–waterproof Type

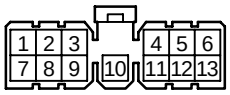	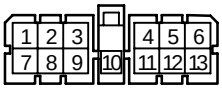	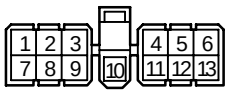
90980–10033	90980–10062	90980–10132
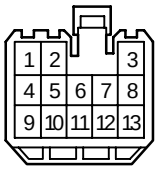	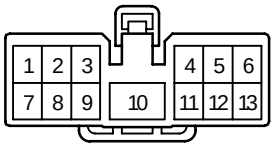	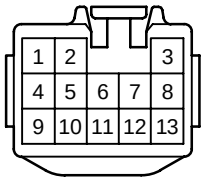
90980–10324	90980–10480	90980–10805
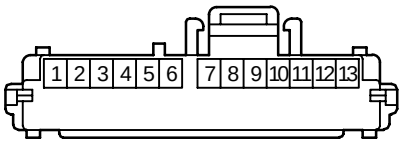	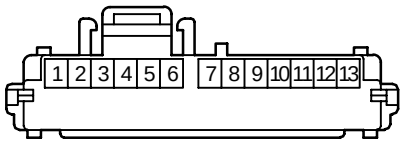	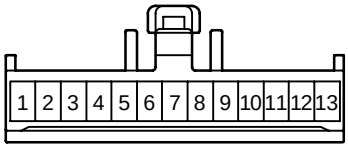
90980–11114	90980–11115	90980–11199
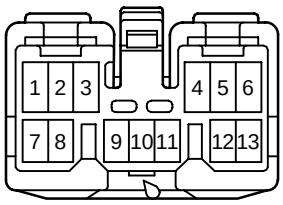	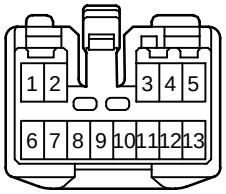	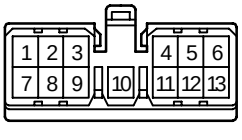
90980–11350	90980–11394	90980–11478

<FEMALE> 13P Non–waterproof Type

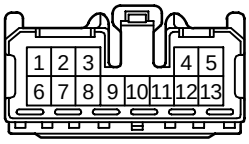	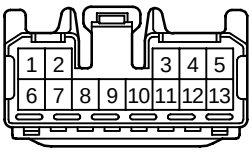	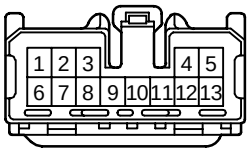
90980–11542	90980–11604	90980–11695
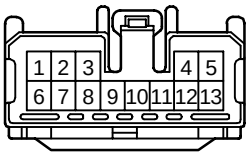	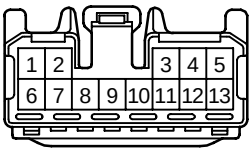	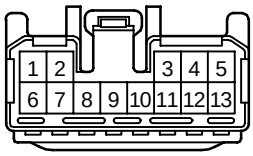
90980–11714	90980–11827	90980–11848
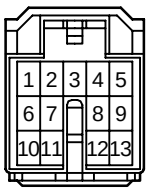	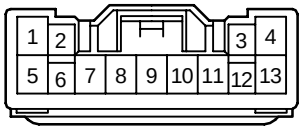	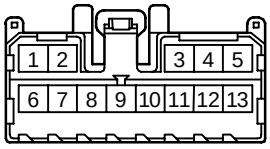
90980–11952	90980–12007	90980–12027

<FEMALE> 14P Non–waterproof Type

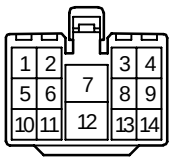

90980–10330

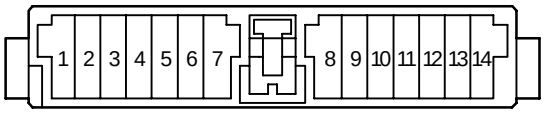

90980–10368

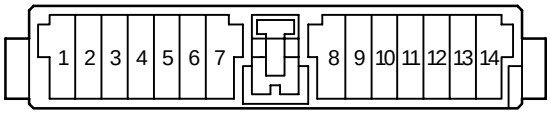

90980–10369

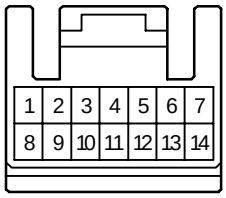

90980–10371

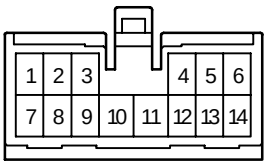

90980–10471

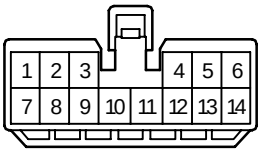

90980–10507

<FEMALE> 14P Non–waterproof Type

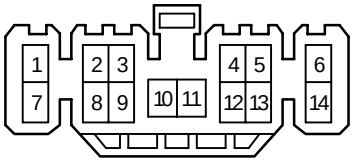

90980–10538

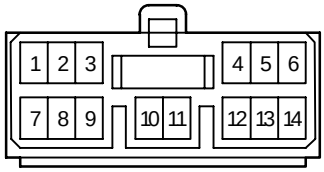

90980–10608

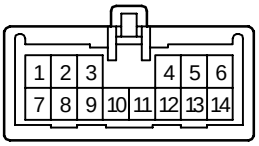

90980–10633

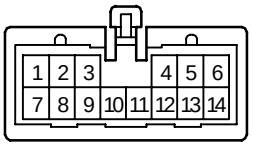

90980–10634

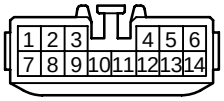

90980–10807
90980–11437

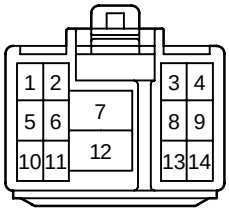

90980–10813

<FEMALE> 14P Non–waterproof Type

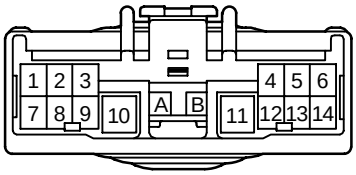

90980–10852

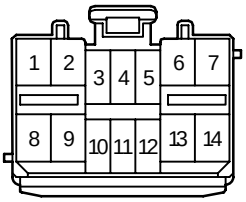

90980–11225

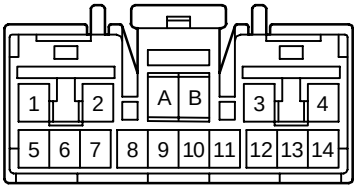

90980–11383

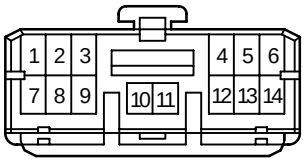

90980–11433

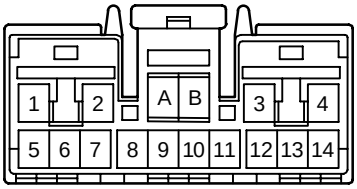

90980–11465

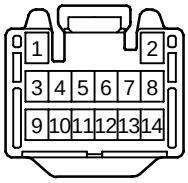

90980–11511

<FEMALE> 14P Non–waterproof Type

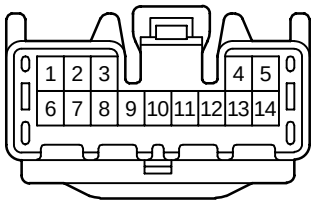

90980–11556

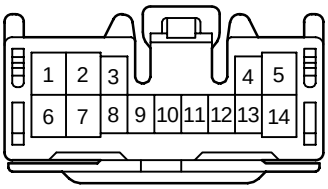

90980–11591

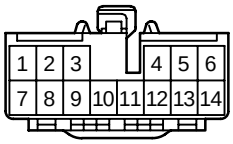

90980–11791

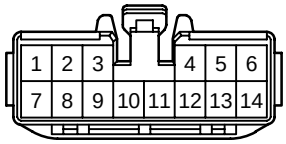

90980–11805

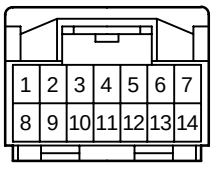

90980–11911

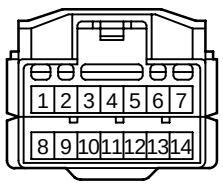

90980–11925

<FEMALE> 14P Non–waterproof Type

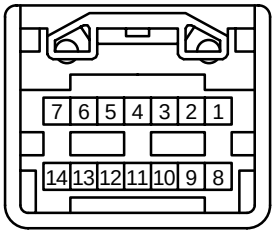

90980–12082

<FEMALE> 15P Non–waterproof Type

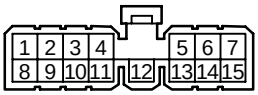

90980–10066

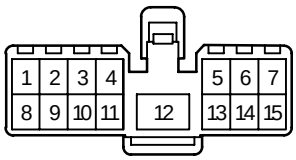

90980–10331

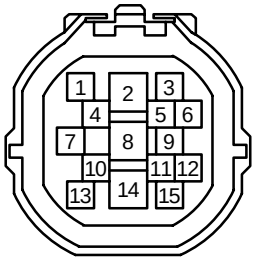

90980–10443

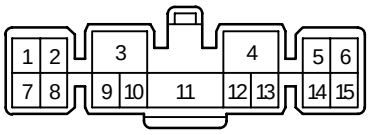

90980–10563

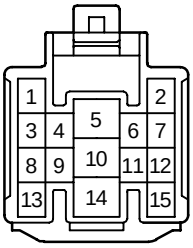

90980–10815

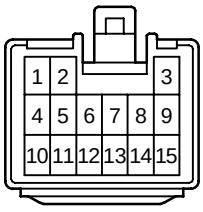

90980–10828

<FEMALE> 15P Non–waterproof Type

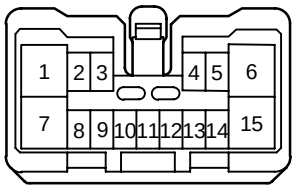

90980–11042

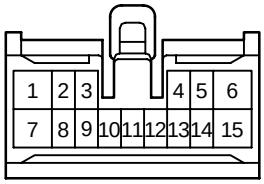

90980–11056

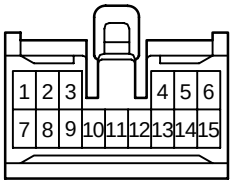

90980–11179

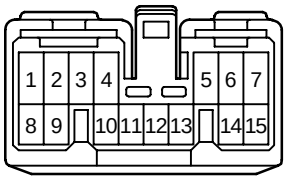

90980–11264

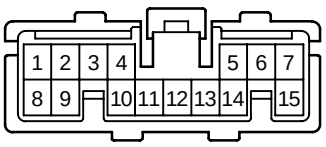

90980–11372

<FEMALE> 16P Non–waterproof Type

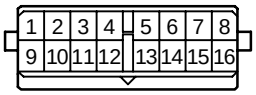

90980–10008

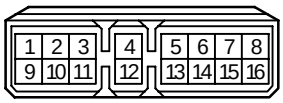

90980–10028

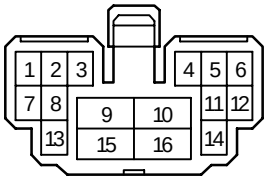

90980–10454

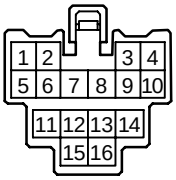

90980–10486

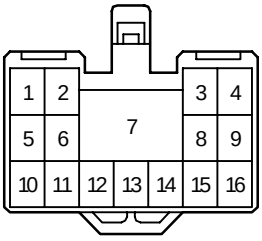

90980–10522

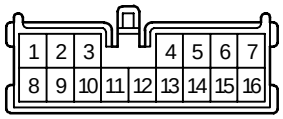

90980–10525

<FEMALE> 16P Non–waterproof Type

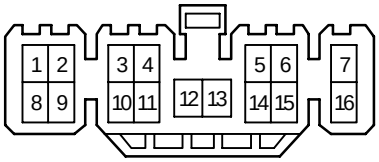

90980–10539

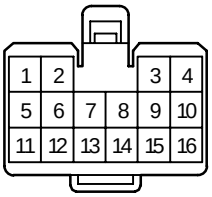

90980–10543

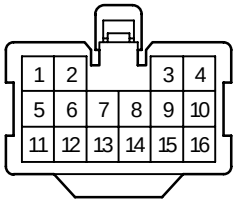

90980–10561

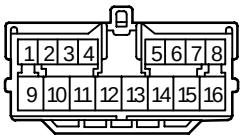

90980–10611

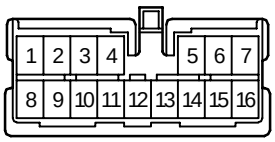

90980–10613

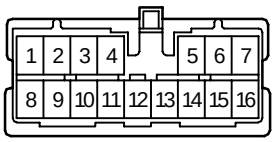

90980–10614

<FEMALE> 16P Non–waterproof Type

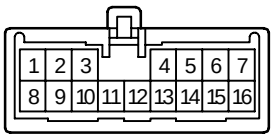

90980–10635

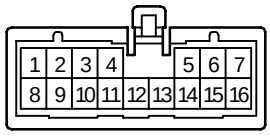

90980–10636

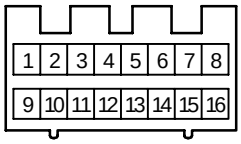

90980–10740

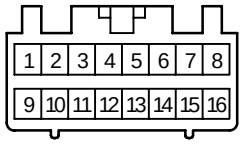

90980–10764

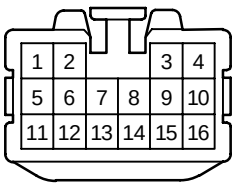

90980–10809
90980–11445

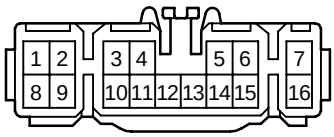

90980–10848

<FEMALE> 16P Non–waterproof Type

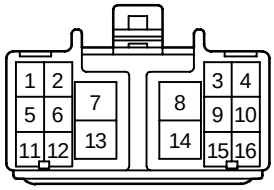

90980–10885

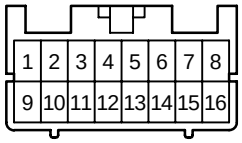

90980–11082

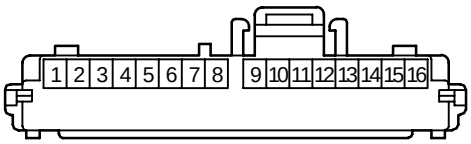

90980–11113

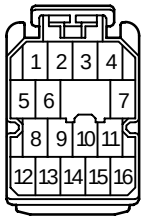

90980–11219

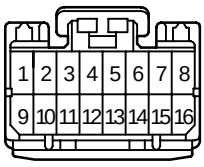

90980–11391

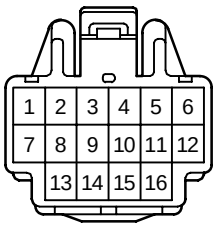

90980–11416

<FEMALE> 16P Non–waterproof Type

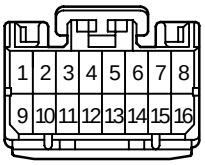

90980–11425

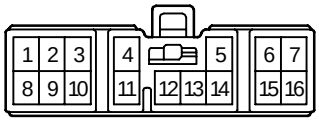

90980–11435

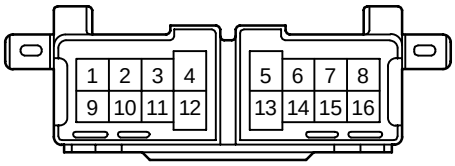

90980–11547

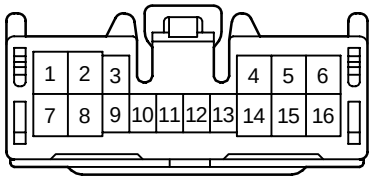

90980–11562

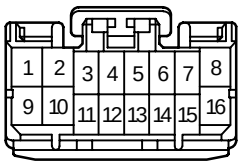

90980–11565

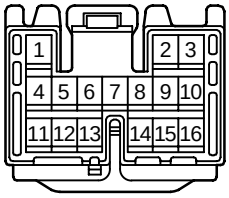

90980–11574

<FEMALE> 16P Non–waterproof Type

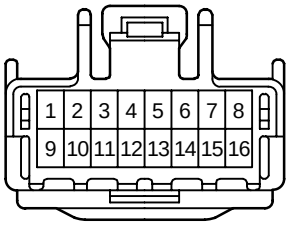

90980–11648

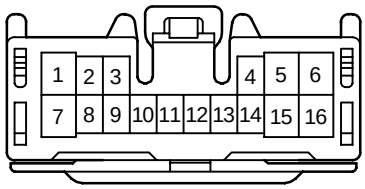

90980–11652

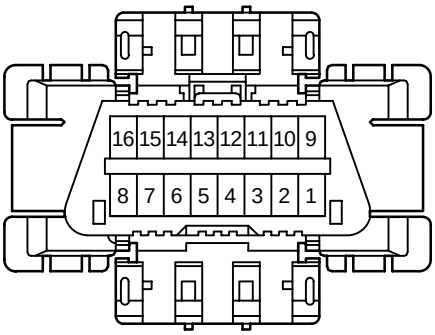

90980–11665
90980–11978

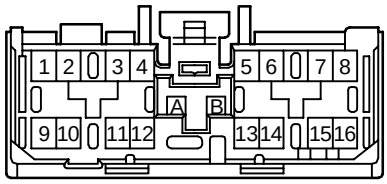

90980–11681

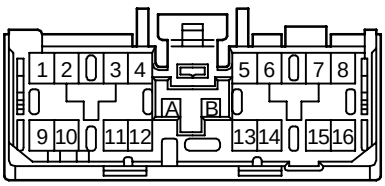

90980–11683

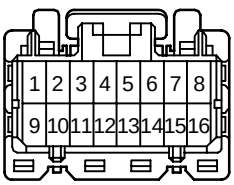

90980–11787

<FEMALE> 16P Non–waterproof Type

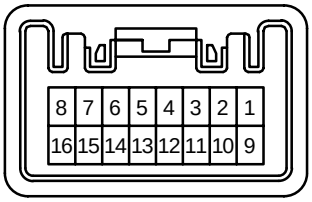

90980–12093

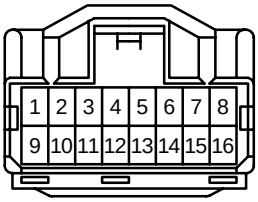

90980–12094

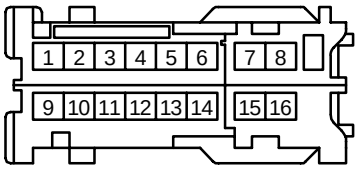

90980–12101

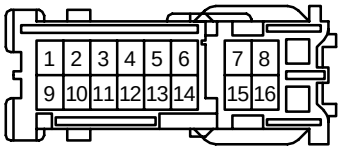

90980–12104

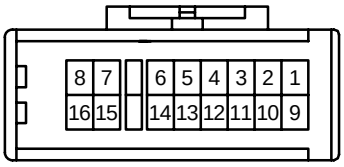

90980–12105

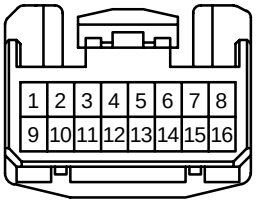

90980–12155

<FEMALE> 16P Non–waterproof Type

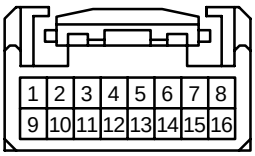

90980–12156

<FEMALE> 17P Non–waterproof Type

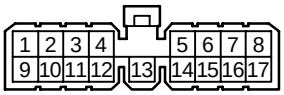

90980–10031

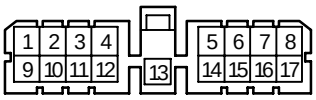

90980–10037

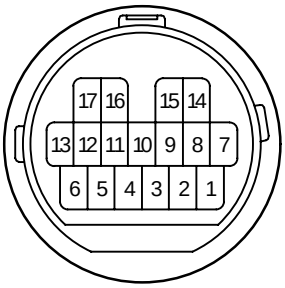

90980–10731
90980–11417
90980–11420

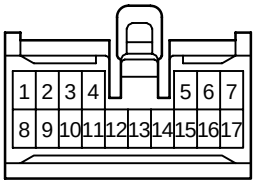

90980–11203

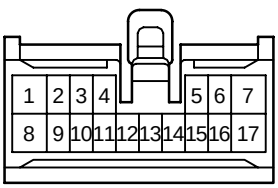

90980–11310

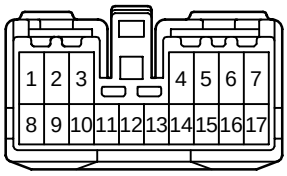

90980–11335

<FEMALE> 17P Non–waterproof Type

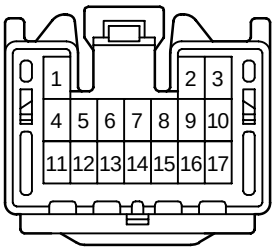

90980–11506

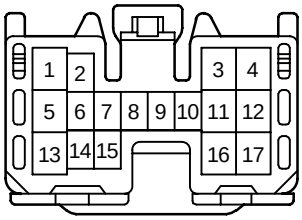

90980–11560

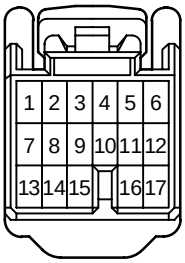

90980–11586

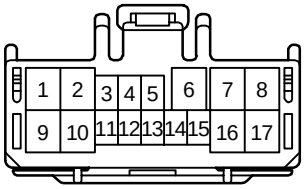

90980–11671

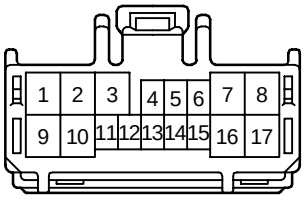

90980–11672

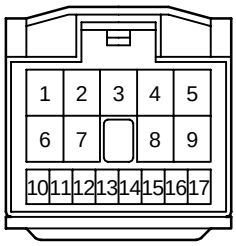

90980–11954

<FEMALE> 18P Non–waterproof Type

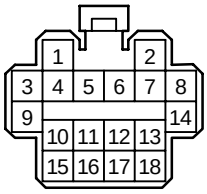

90980–10285

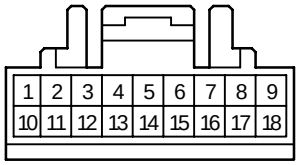

90980–10295

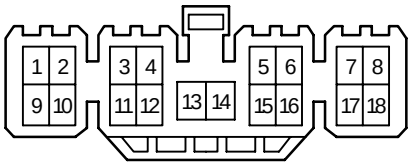

90980–10326

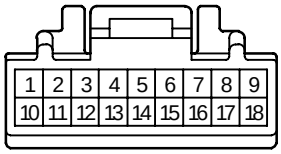

90980–10350

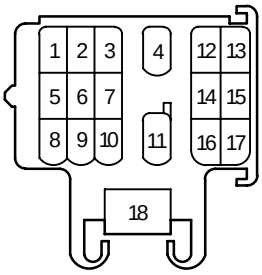

90980–10530

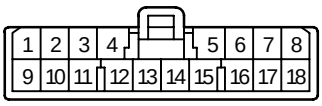

90980–10656

<FEMALE> 18P Non–waterproof Type

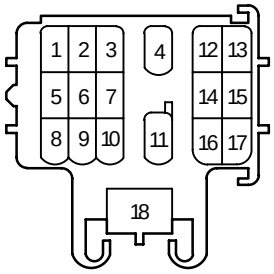

90980–10778

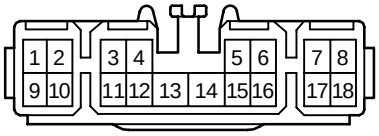

90980–10819

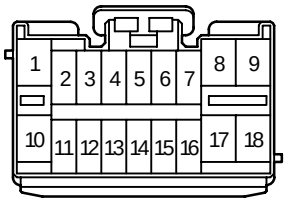

90980–11224

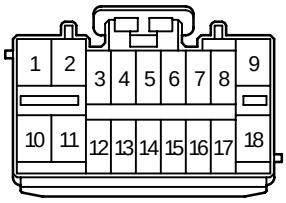

90980–11226

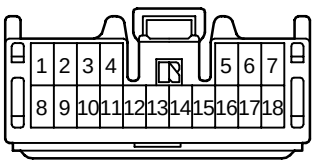

90980–11497

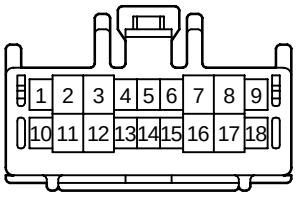

90980–11594

<FEMALE> 18P Non–waterproof Type

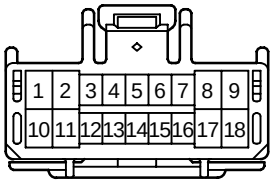

90980–11595

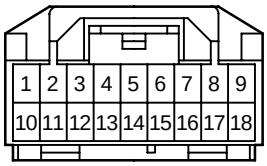

90980–11913

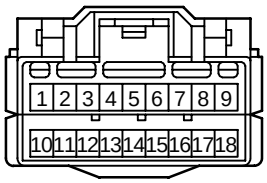

90980–11914

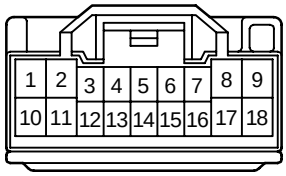

90980–11973

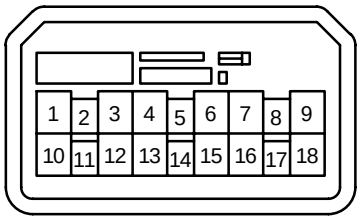

90980–12122

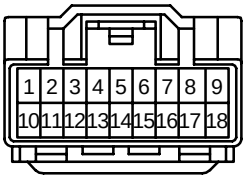

90980–12174

<FEMALE> 19P Non–waterproof Type

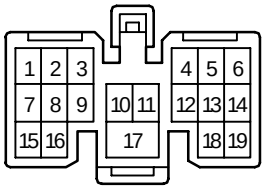

90980–10675

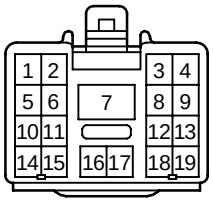

90980–10857

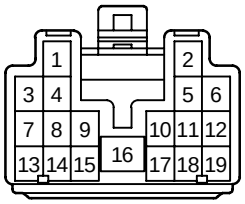

90980–10883

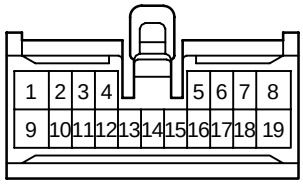

90980–11205

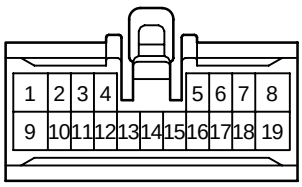

90980–11308

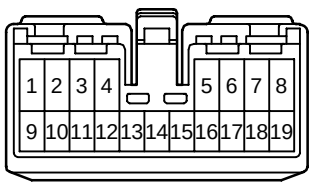

90980–11377

<FEMALE> 19P Non–waterproof Type

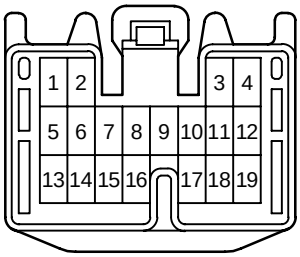

90980–11571

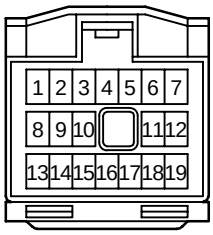

90980–11955

<FEMALE> 20P Non–waterproof Type

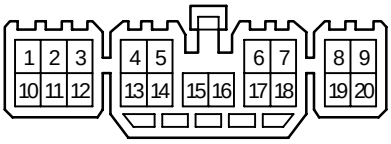

90980–10327

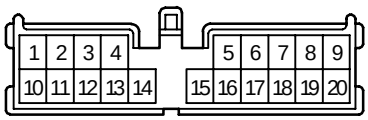

90980–10589

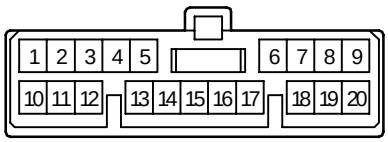

90980–10607

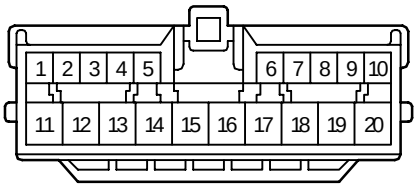

90980–10612

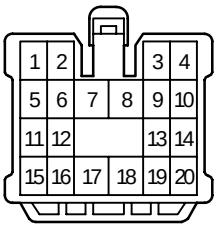

90980–10640

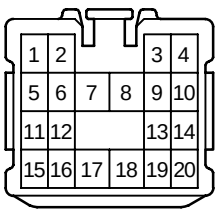

90980–10811
90980–11441

<FEMALE> 20P Non–waterproof Type

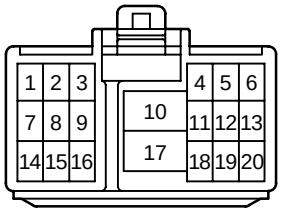

90980–10817

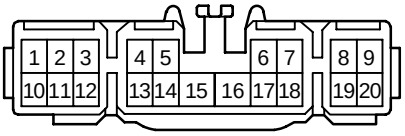

90980–10821

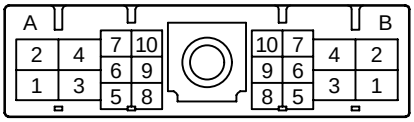

90980–10952

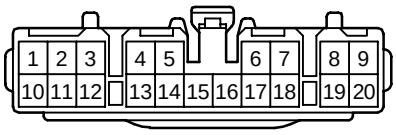

90980–11260

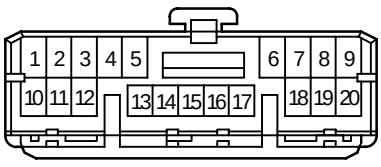

90980–11432

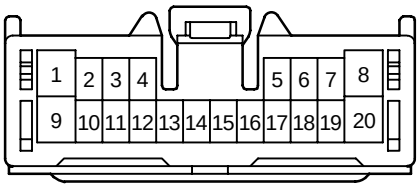

90980–11469

<FEMALE> 20P Non–waterproof Type

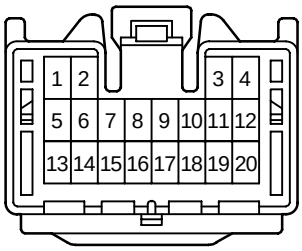

90980–11499

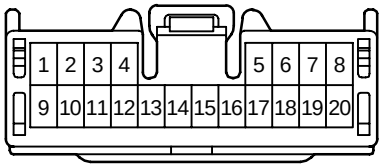

90980–11558

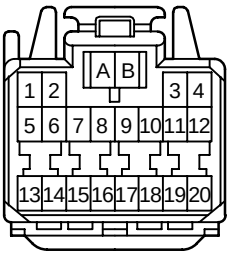

90980–11868

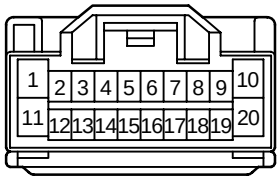

90980–11971

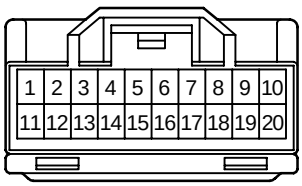

90980–11974

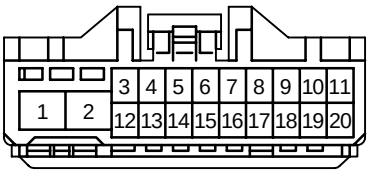

90980–12034

<FEMALE> 20P Non–waterproof Type

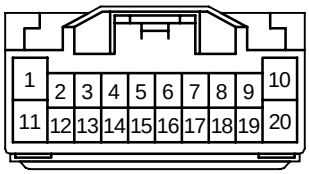

90980–12038

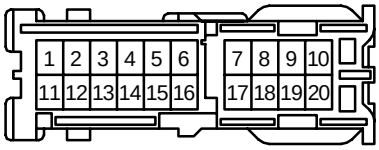

90980–12106

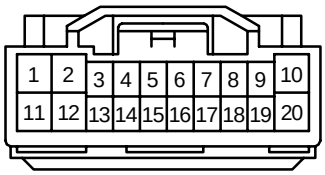

90980–12166

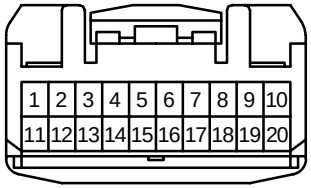

90980–12259

<FEMALE> 21P Non–waterproof Type

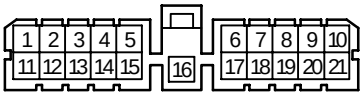

90980–10064

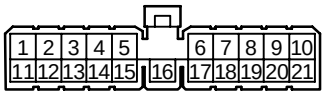

90980–10207

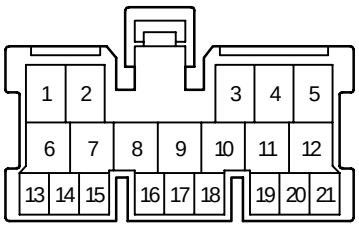

90980–10473

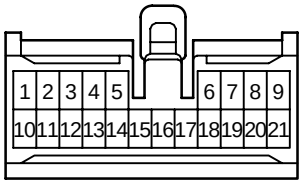

90980–11125

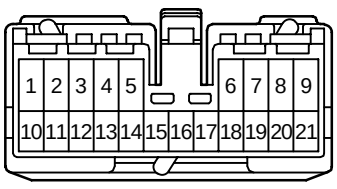

90980–11379

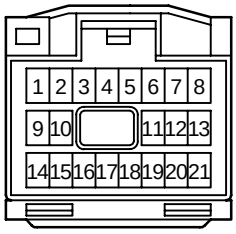

90980–11956

<FEMALE> 21P Non–waterproof Type

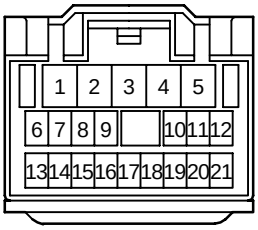

90980–11957

<FEMALE> 22P Non–waterproof Type

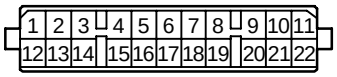

90980–10010

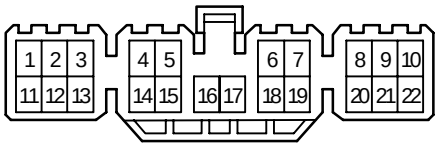

90980–10328

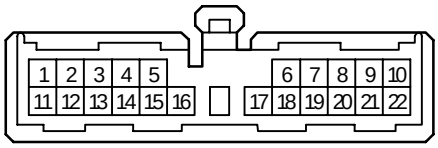

90980–10456

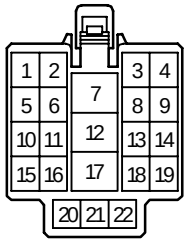

90980–10458

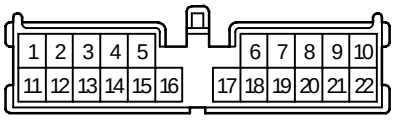

90980–10526

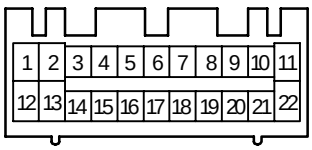

90980–10741

<FEMALE> 22P Non–waterproof Type

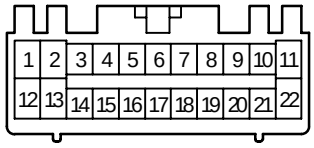

90980–10765

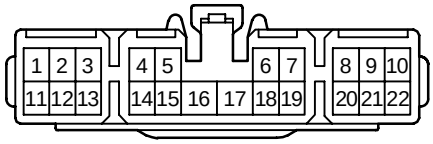

90980–10875

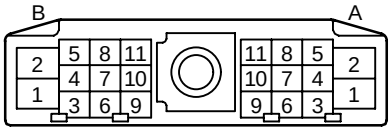

90980–10953

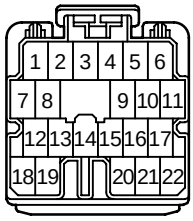

90980–11220

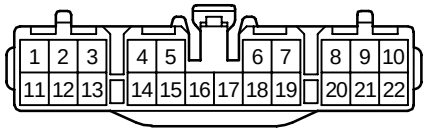

90980–11238

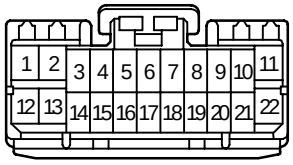

90980–11392

<FEMALE> 22P Non–waterproof Type

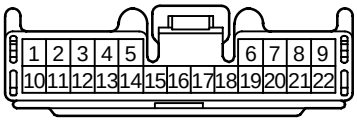

90980–11502

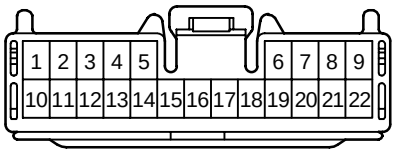

90980–11628

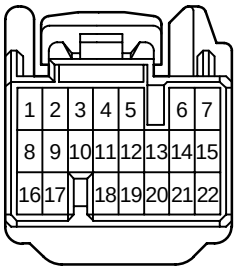

90980–11638

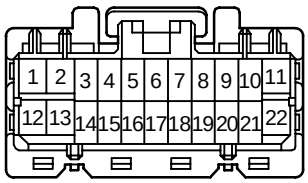

90980–11788

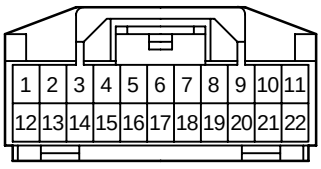

90980–11915

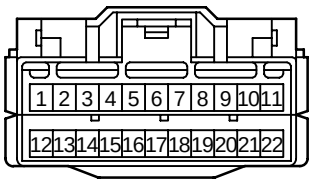

90980–11927

<FEMALE> 23P Non–waterproof Type

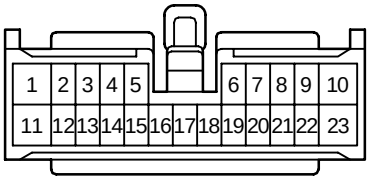

90980–10921

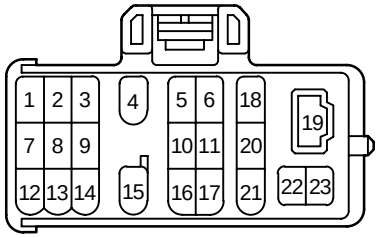

90980–11195

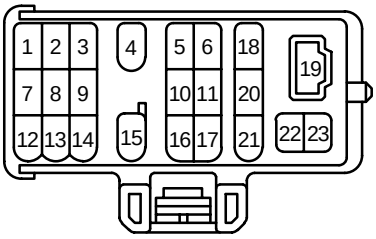

90980–11323

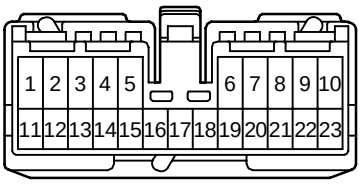

90980–11381

<FEMALE> 24P Non–waterproof Type

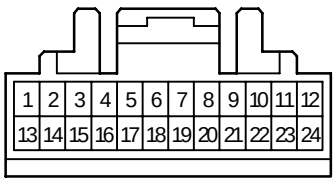

90980–10296

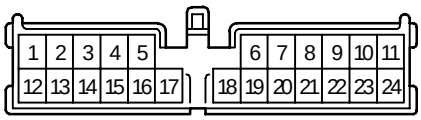

90980–10585

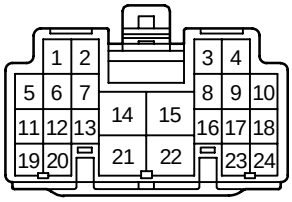

90980–10881

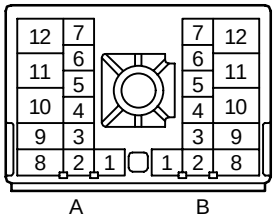

90980–10955

<FEMALE> 24P Non–waterproof Type

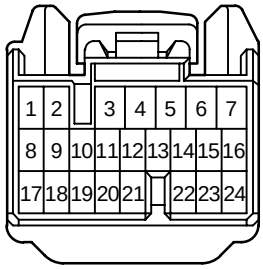

90980–11476

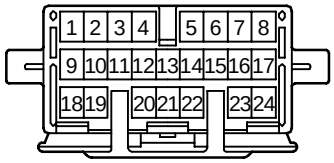

90980–11509

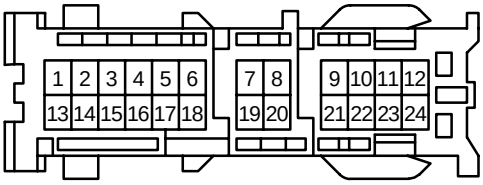

90980–12070

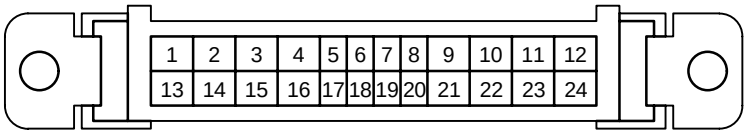

90980–12079

<FEMALE> 24P Non–waterproof Type

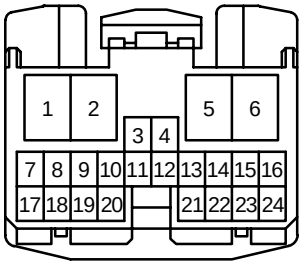

90980–12149

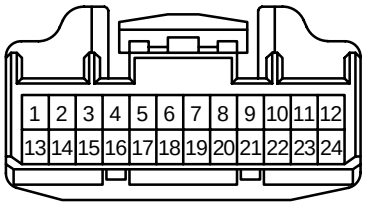

90980–12200

<FEMALE> 25P Non–waterproof Type

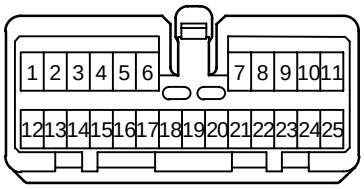

90980–11043

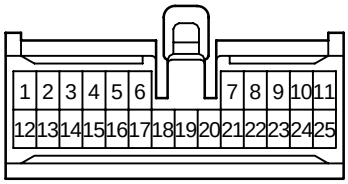

90980–11055

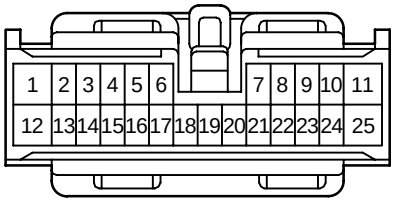

90980–11058

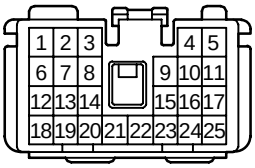

90980–11375

<FEMALE> 25P Non–waterproof Type

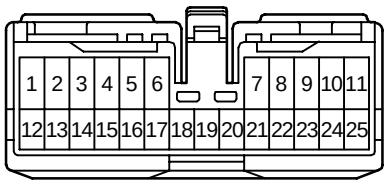

90980–11404

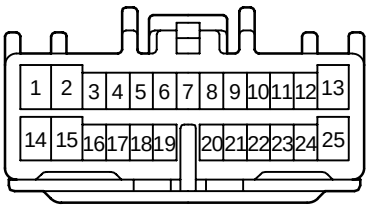

90980–11877

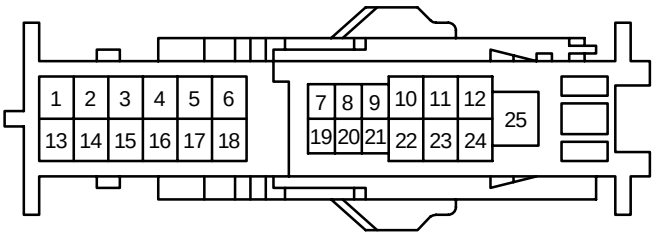

90980–12278

<FEMALE> 26P Non–waterproof Type

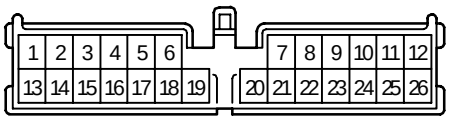

90980–10587

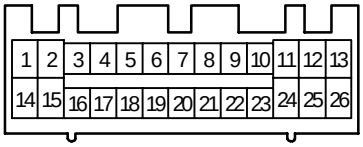

90980–10739

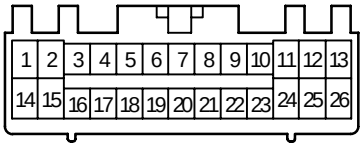

90980–10763

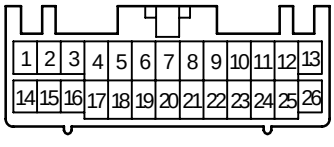

90980–10918

<FEMALE> 26P Non–waterproof Type

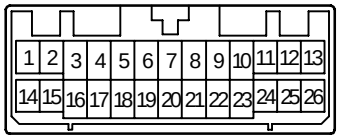

90980–10925

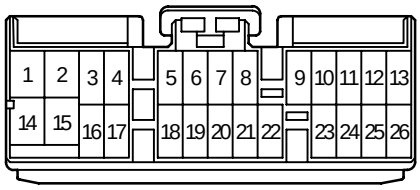

90980–11234

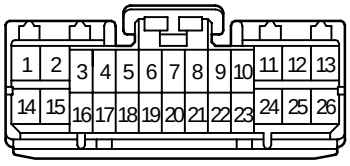

90980–11390

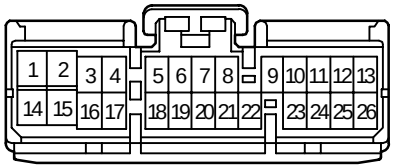

90980–11406

<FEMALE> 26P Non–waterproof Type

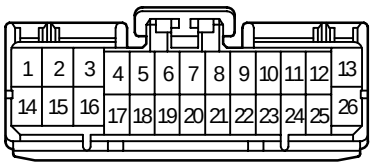

90980–11422

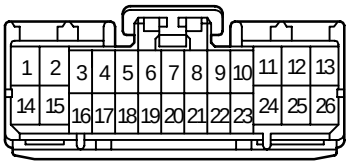

90980–11423

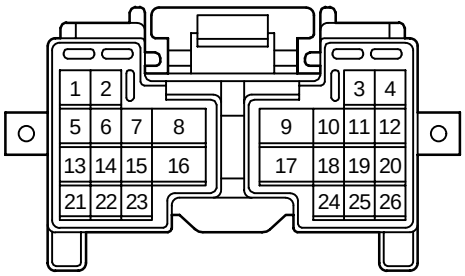

90980–11611

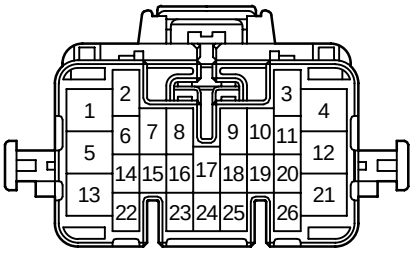

90980–11632

<FEMALE> 26P Non–waterproof Type

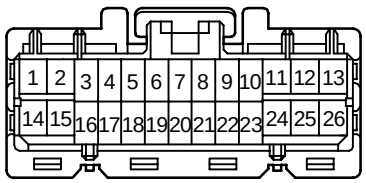

90980–11786

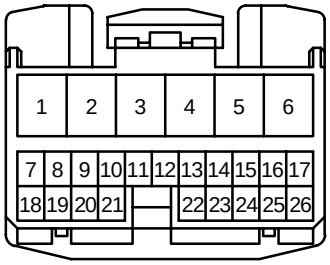

90980–12150

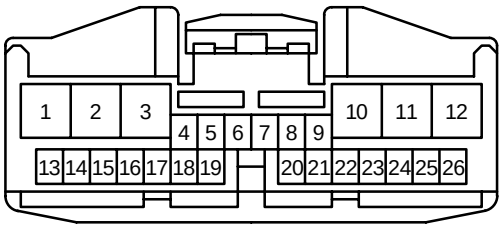

90980–12203

<FEMALE> 27P Non–waterproof Type

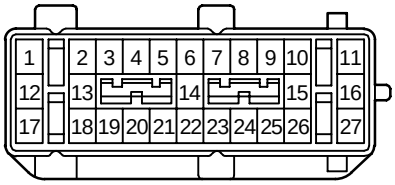

90980–11670

<FEMALE> 28P Non–waterproof Type

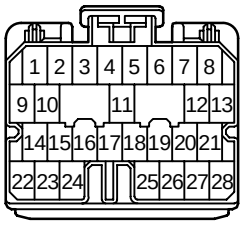

90980–11218

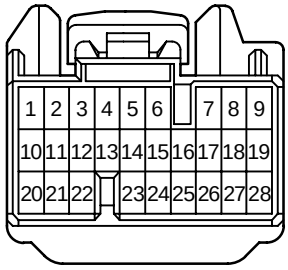

90980–11637

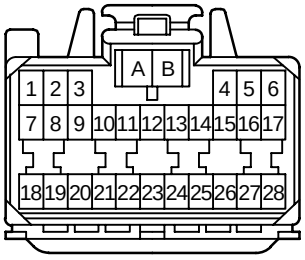

90980–11872

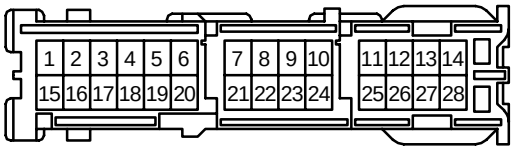

90980–12102

<FEMALE> 30P Non–waterproof Type

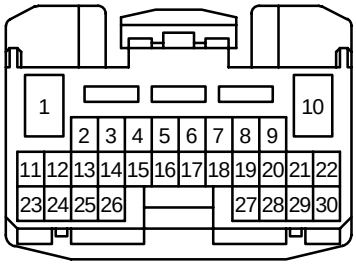

90980–12151

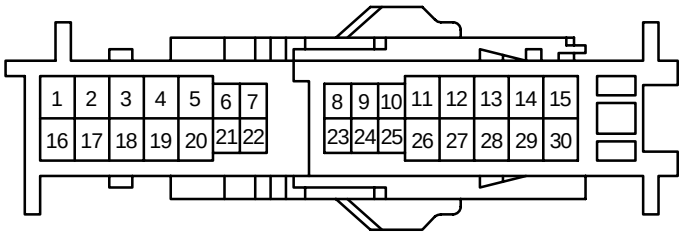

90980–12277

<FEMALE> 31P Non–waterproof Type

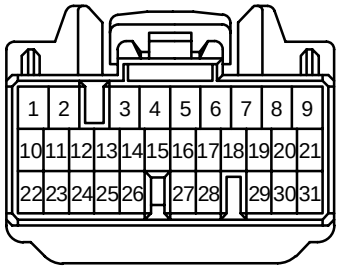

90980–11421

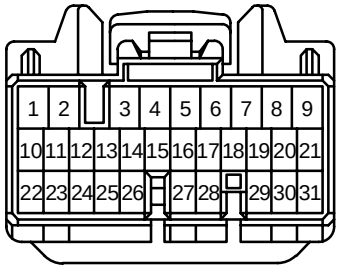

90980–11935

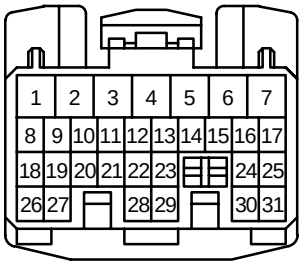

90980–12142

<FEMALE> 32P Non–waterproof Type

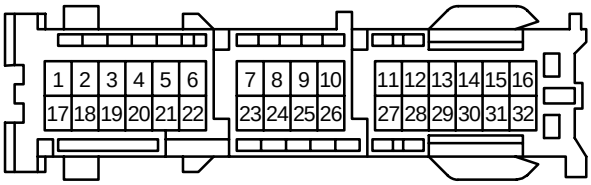

90980–12071

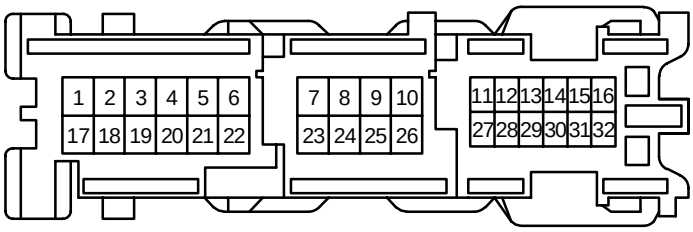

90980–12096

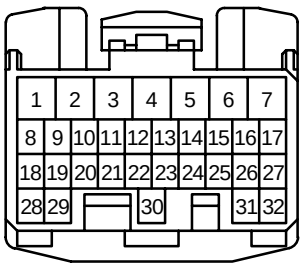

90980–12143

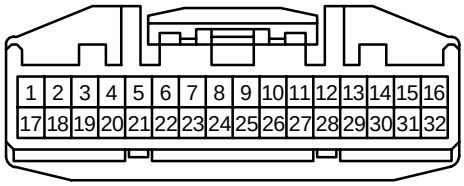

90980–12153

<FEMALE> 32P Non–waterproof Type

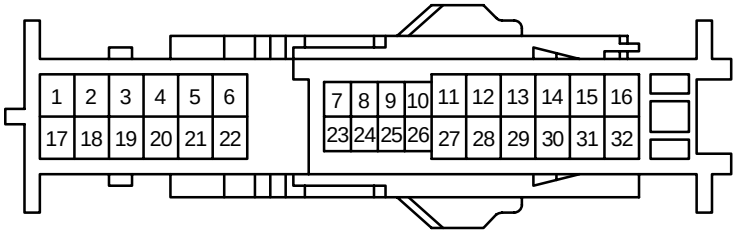

90980–12275

<FEMALE> 34P Non–waterproof Type

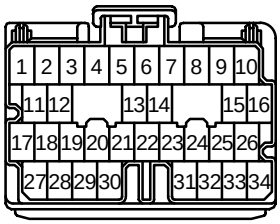

90980–11221

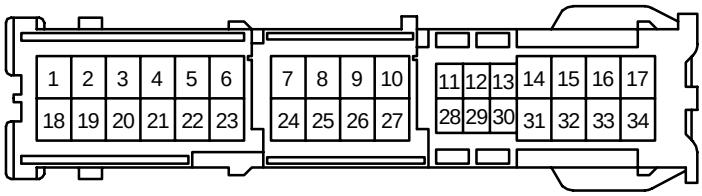

90980–12114

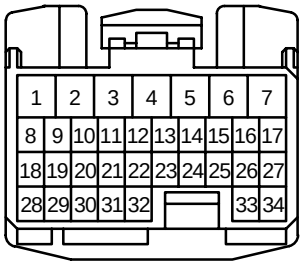

90980–12144

<FEMALE> 35P, 36P Non–waterproof Type

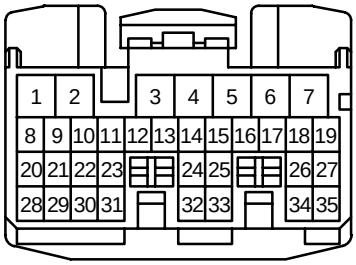

90980–12145

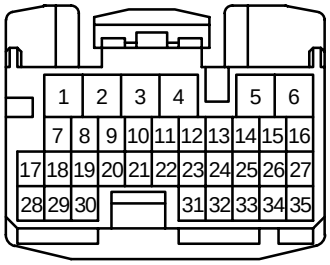

90980–12146

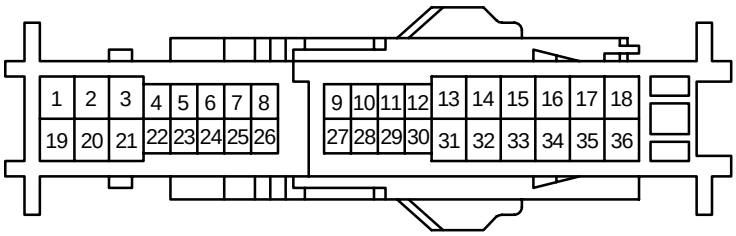

90980–12274

<FEMALE> 38P Non–waterproof Type

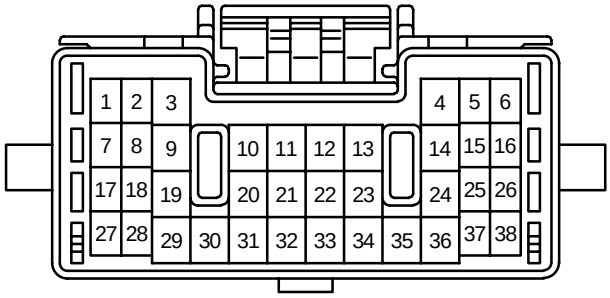

90980–11555

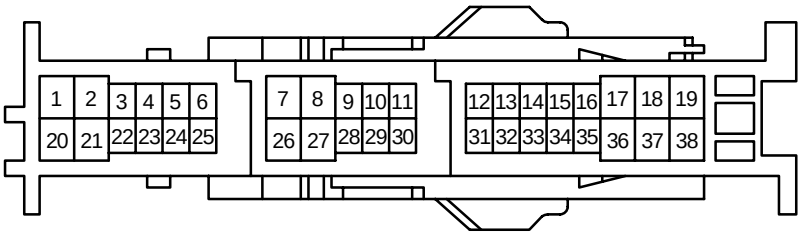

90980–12276

<FEMALE> 40P Non–waterproof Type

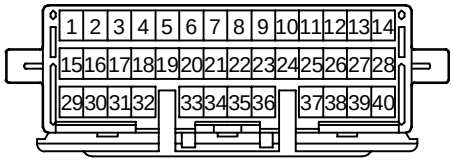

90980–11508

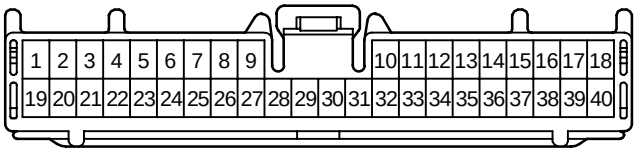

90980–11618

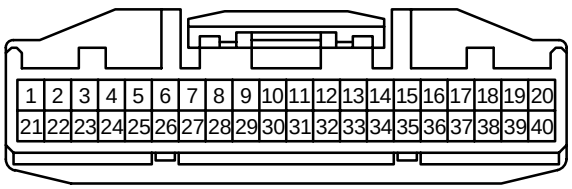

90980–12169

<FEMALE> 40P Non–waterproof Type

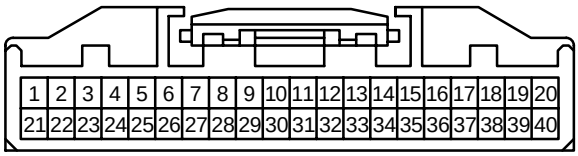

90980–12170

<FEMALE> 42P, 43P, 46P Non–waterproof Type

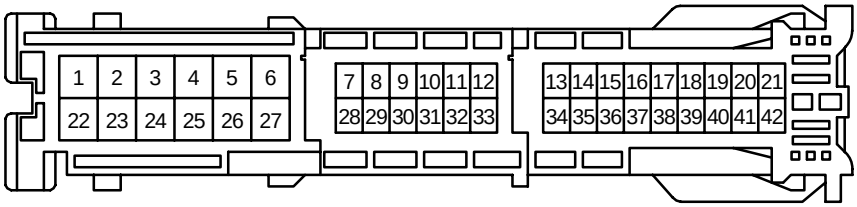

90980–12184

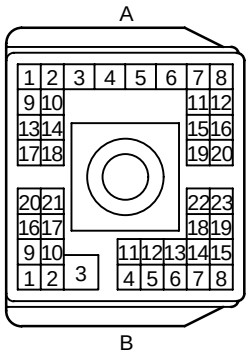

90980–11360

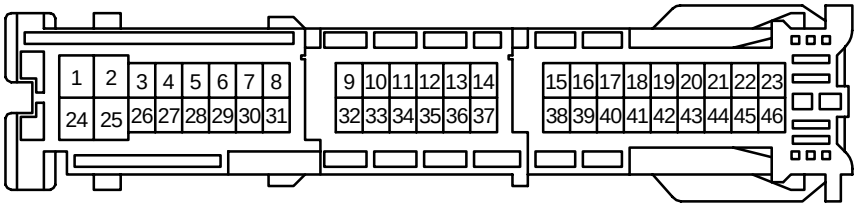

90980–12179

<FEMALE> 49P, 55P, 83P Non–waterproof Type

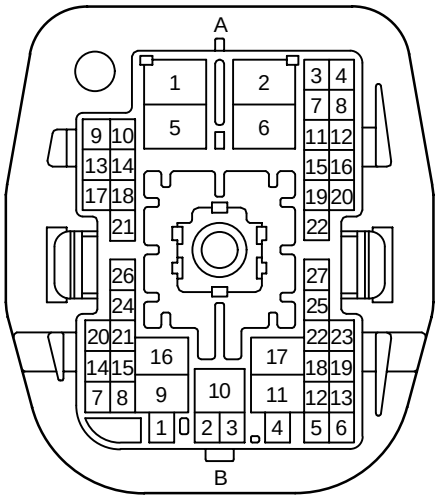

90980–11431

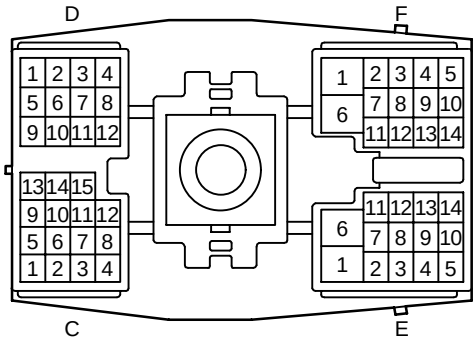

90980–11359

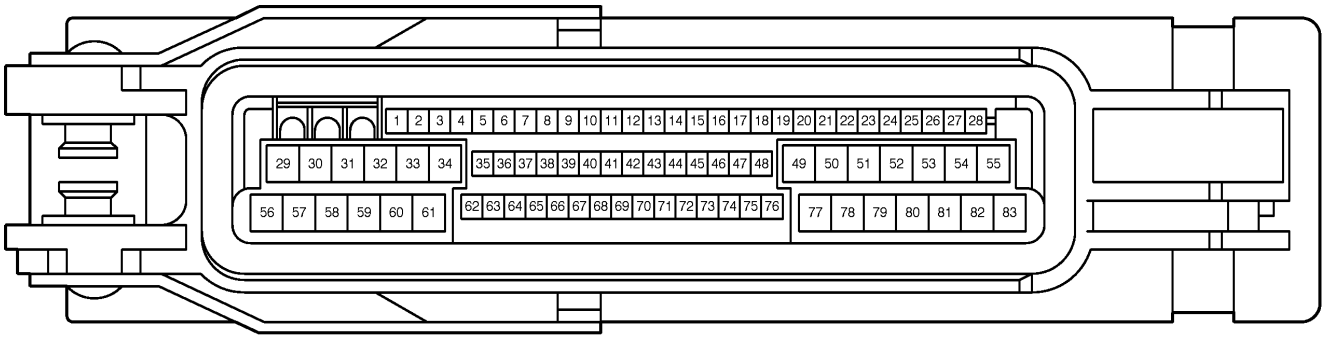

90980–11906

<FEMALE> 88P Non–waterproof Type

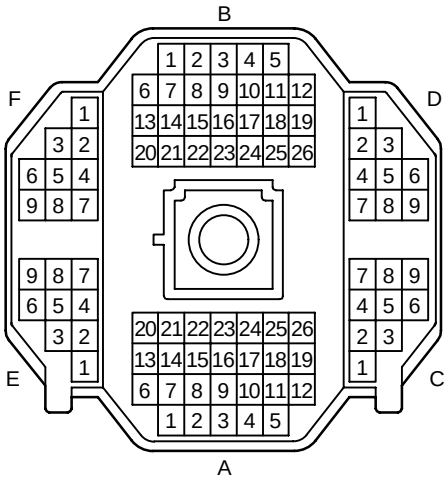

90980–10950

<MALE> 1P Waterproof Type

 90980–10114	 90980–10125	 90980–10200	 90980–10240
 90980–10246	 90980–10438	 90980–10836	 90980–10892
 90980–10982	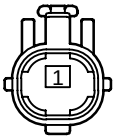 90980–11006	 90980–11183	 90980–11270
 90980–11962			

<MALE> 2P Waterproof Type

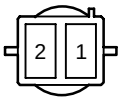 90980–10091	 90980–10122	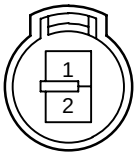 90980–10156 90980–10412	 90980–10192
 90980–10242	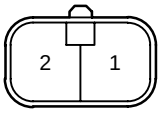 90980–10374	 90980–10495	 90980–10497
 90980–10533	 90980–10555 90980–10707	 90980–10566	 90980–10571
 90980–10575	 90980–10580	 90980–10582	 90980–10592
 90980–10594	 90980–10625 90980–10788	 90980–10665	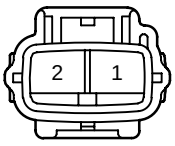 90980–10838

<MALE> 2P Waterproof Type

			
90980–10842	90980–10886	90980–10898	90980–10900
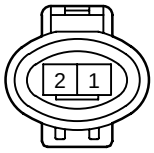			
90980–10927	90980–10948	90980–10959	90980–10970
	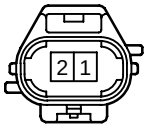		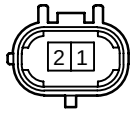
90980–11002	90980–11004	90980–11008	90980–11029
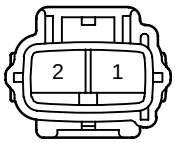	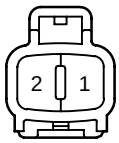		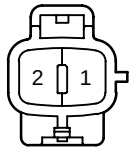
90980–11031	90980–11050	90980–11069	90980–11072
			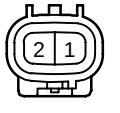
90980–11073 90980–11074	90980–11137	90980–11141	90980–11155

<MALE> 2P Waterproof Type

	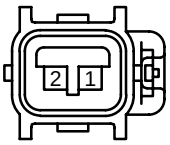		
90980–11168	90980–11175	90980–11188	90980–11236
			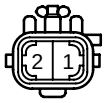
90980–11247	90980–11249	90980–11254	90980–11272
	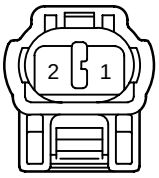		
90980–11303	90980–11322	90980–11409	90980–11447
		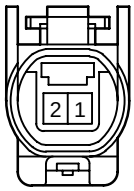	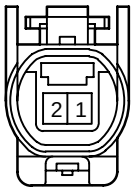
90980–11466	90980–11486	90980–11789	90980–11854
	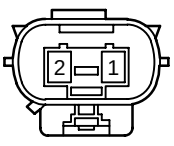	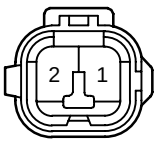	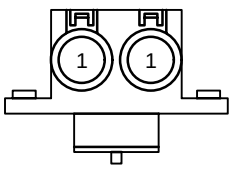
90980–11863	90980–11865	90980–11901	90980–11945

<MALE> 2P Waterproof Type

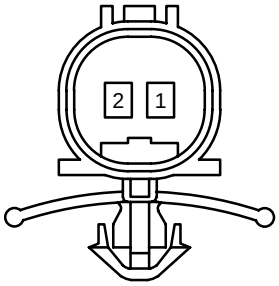 90980–12194			

<MALE> 3P Waterproof Type

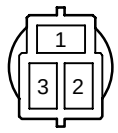 90980–10093	 90980–10190	 90980–10235	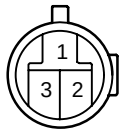 90980–10244
 90980–10248 90980–10347	 90980–10394 90980–10444	 90980–10492 90980–10493 90980–10774 90980–10787	 90980–10500
 90980–10553 90980–10577 90980–10777	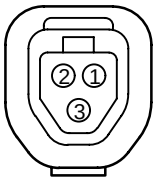 90980–10682	 90980–10689	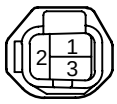 90980–10698
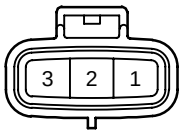 90980–10840	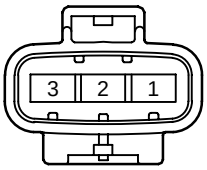 90980–10944	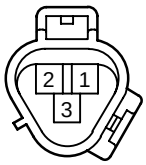 90980–11015	 90980–11044
 90980–11131	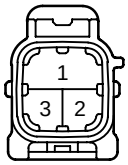 90980–11160	 90980–11169	 90980–11244 90980–11295 90980–11407

<MALE> 3P Waterproof Type

 90980–11293	 90980–11341	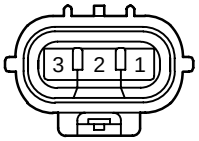 90980–11348	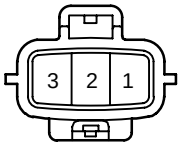 90980–11607
 90980–11622	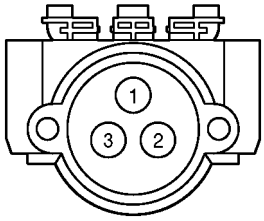 90980–12131		

<MALE> 4P Waterproof Type

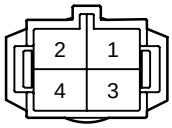	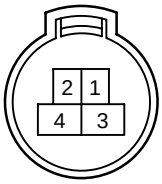	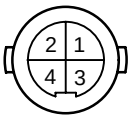	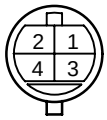
90980–10094	90980–10139	90980–10202	90980–10217
	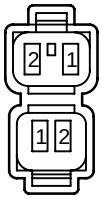		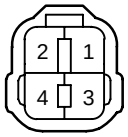
90980–10475	90980–10510 90980–11076	90980–10590	90980–10648
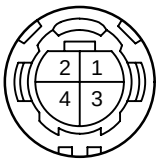			
90980–10662	90980–10749	90980–10751 90980–10768	90980–10868
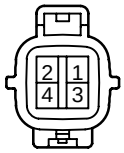		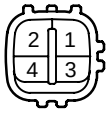	
90980–10941	90980–10989	90980–11027	90980–11035
	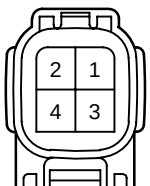	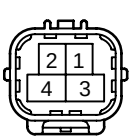	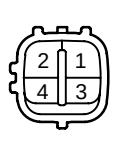
90980–11063 90980–11064	90980–11122	90980–11138	90980–11177

<MALE> 4P Waterproof Type

 90980–11262 90980–11328	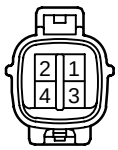 90980–11268	 90980–11287	 90980–11291
 90980–11929	 90980–12177		

<MALE> 5P Waterproof Type

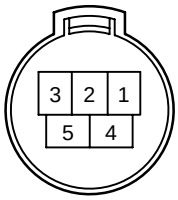 90980–10161	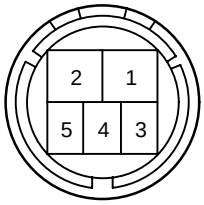 90980–10392	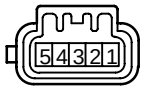 90980–10557 90980–10570	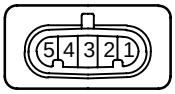 90980–10642
 90980–10709	 90980–10945	 90980–11021	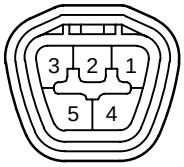 90980–11078
 90980–11181	 90980–11412	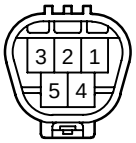 90980–11598	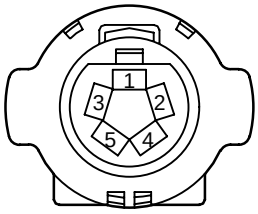 90980–11689

<MALE> 6P, 7P Waterproof Type

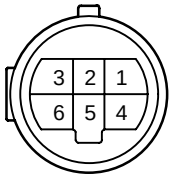		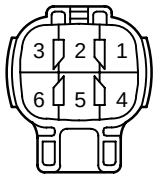	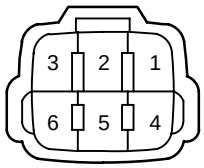
90980–10194	90980–10477	90980–10596	90980–10650 90980–10984
		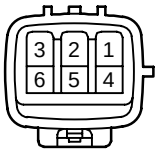	
90980–10987	90980–11033	90980–11193	90980–11196
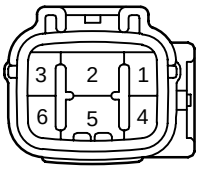		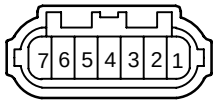	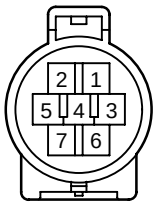
90980–11267	90980–11289	90980–10627	90980–10930
			
90980–11171			

<MALE> 8P, 9P Waterproof Type

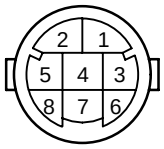	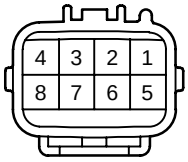	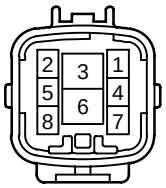
90980–10204	90980–10890	90980–10894
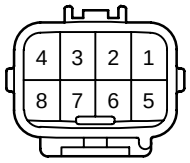		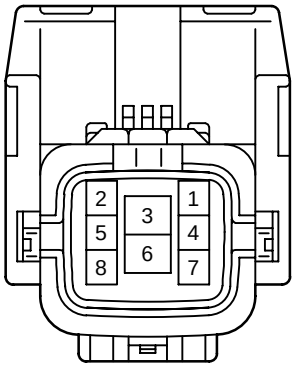
90980–10896	90980–11241	90980–11460
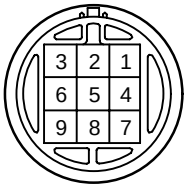	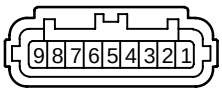	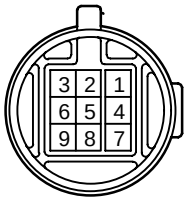
90980–10379	90980–10677	90980–10775
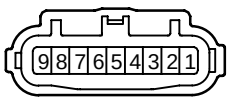	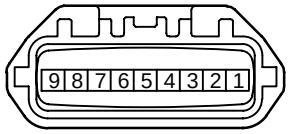	
90980–10826	90980–11191	

<MALE> 11P, 12P, 13P, 15P Waterproof Type

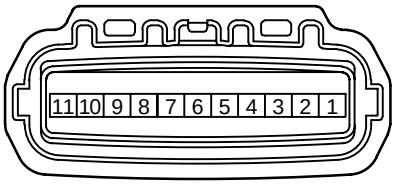	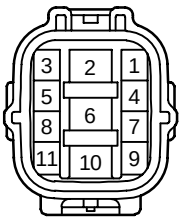	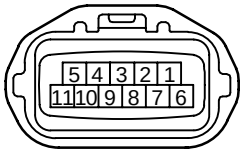
90980–11173	90980–11239	90980–11256
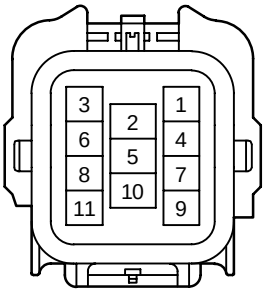	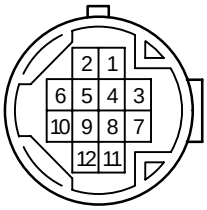	
90980–11609	90980–10568	90980–11086
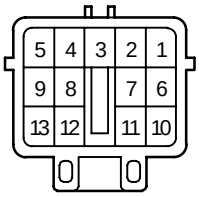	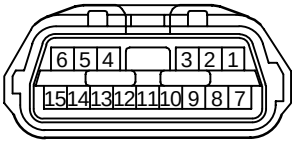	
90980–10653	90980–11088	

<MALE> 16P, 17P Waterproof Type

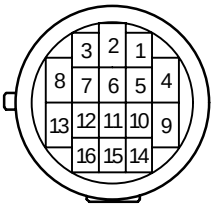

90980–10287

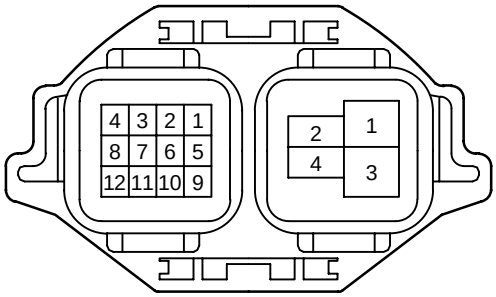

90980–10547

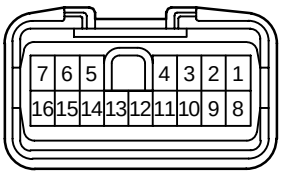

90980–11462

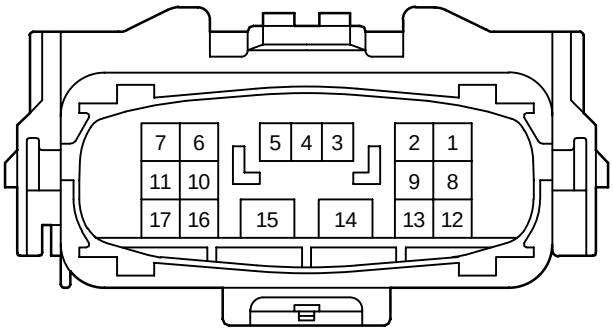

90980–11600

<MALE> 120P Waterproof Type

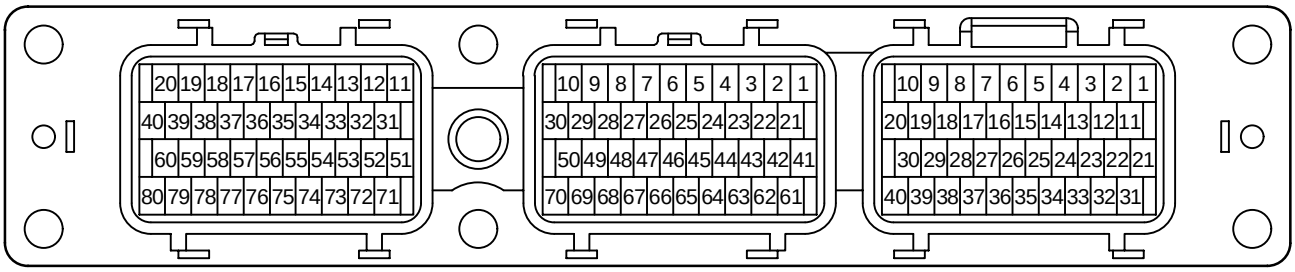

90980–11213

<MALE> 1P Non–waterproof Type

 90980–10160	 90980–10178	 90980–10182	 90980–10251
 90980–10253	 90980–10342	 90980–10396	 90980–10433 90980–10434
 90980–10870 90980–11026 90980–11097	 90980–10994	 90980–11146	 90980–11258
 90980–11737	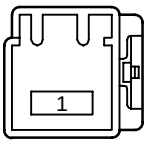 90980–11774	 90980–12041	

<MALE> 2P Non–waterproof Type

 90980–10011	 90980–10038	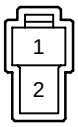 90980–10213 90980–10305	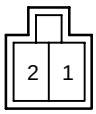 90980–10255
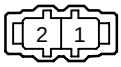 90980–10286	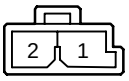 90980–10297	 90980–10344 90980–10346	 90980–10354 90980–10437
 90980–10356	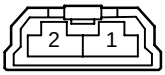 90980–10424	 90980–10620	 90980–10687
 90980–10824	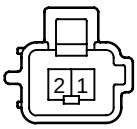 90980–10833 90980–11299	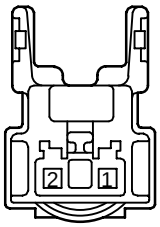 90980–10849	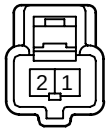 90980–10859
 90980–10905	 90980–10915	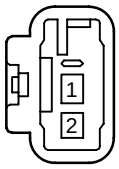 90980–10934	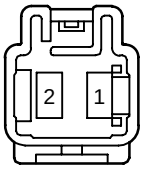 90980–10958

<MALE> 2P Non–waterproof Type

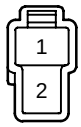 90980–11014	 90980–11060	 90980–11093	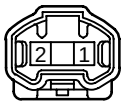 90980–11159
 90980–11211	 90980–11300	 90980–11305	 90980–11367
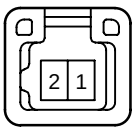 90980–11368	 90980–11395	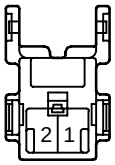 90980–11545	 90980–11589
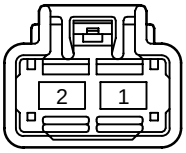 90980–11655	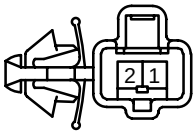 90980–11724	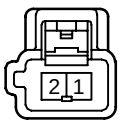 90980–11735	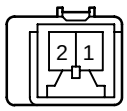 90980–11883
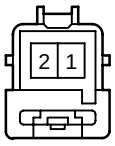 90980–11889	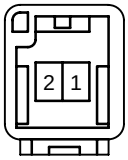 90980–11917	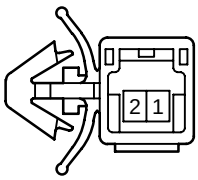 90980–11933	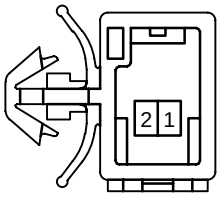 90980–11967

<MALE> 2P Non–waterproof Type

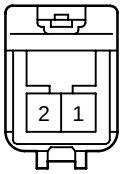 90980–11992	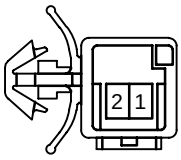 90980–12062		

<MALE> 3P Non–waterproof Type

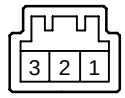 90980–10055 90980–10163	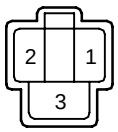 90980–10188	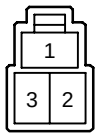 90980–10215 90980–10283 90980–10299	 90980–10231
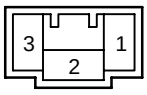 90980–10257 90980–10300 90980–10410	 90980–10364 90980–10573	 90980–10544	 90980–10907
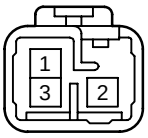 90980–10979	 90980–11052	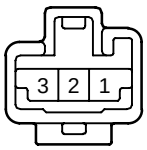 90980–11229	 90980–11298
 90980–11385	 90980–11470	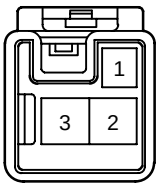 90980–11484	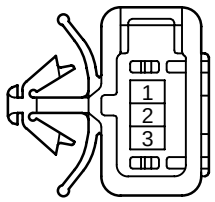 90980–11489
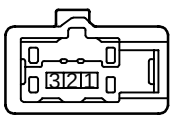 90980–11620	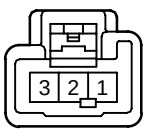 90980–11763	 90980–11874	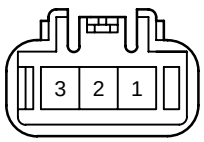 90980–11936

<MALE> 3P Non–waterproof Type

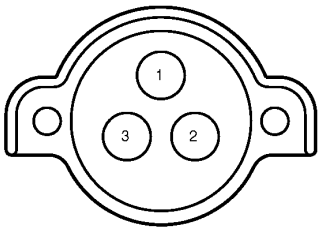	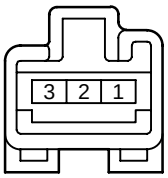	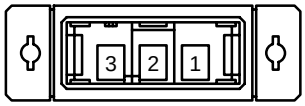	
90980–11937	90980–11994	90980–12196	

<MALE> 4P Non–waterproof Type

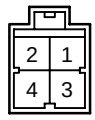	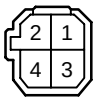	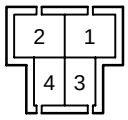	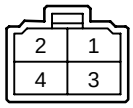
90980–10001	90980–10126	90980–10144	90980–10170
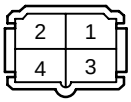	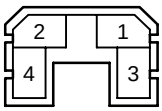	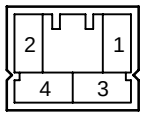	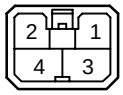
90980–10219	90980–10237	90980–10259	90980–10306
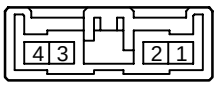			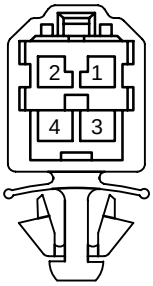
90980–10399	90980–10466	90980–10502	90980–10503
	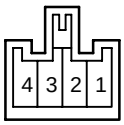	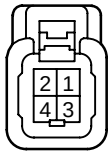	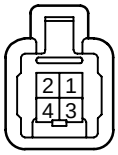
90980–10600	90980–10691	90980–10794	90980–10858
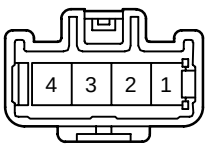	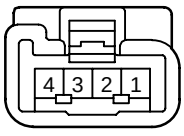	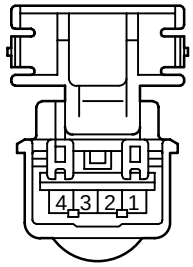	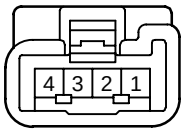
90980–10866	90980–11012	90980–11023	90980–11100

<MALE> 4P Non–waterproof Type

	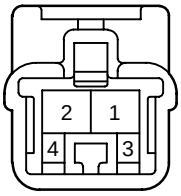	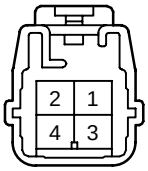	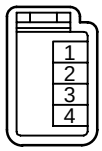
90980–11106	90980–11126	90980–11135	90980–11186
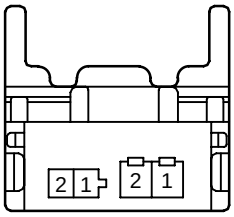		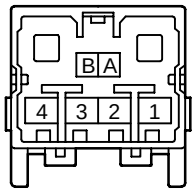	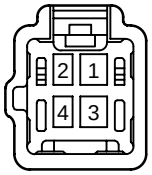
90980–11301	90980–11399	90980–11426	90980–11605
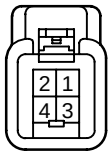	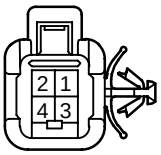	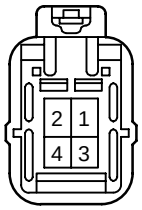	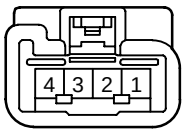
90980–11765	90980–11779	90980–11809	90980–11812
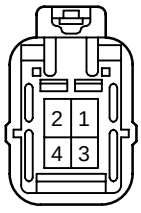	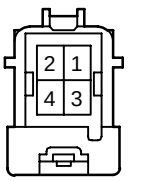		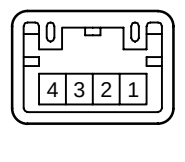
90980–11878	90980–11891	90980–11965	90980–11985
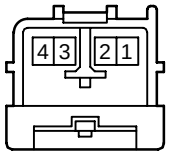	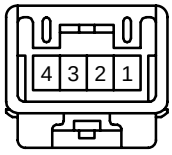	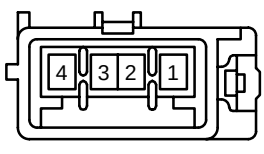	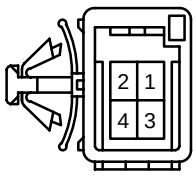
90980–12016	90980–12123	90980–12159	90980–12212

<MALE> 5P Non–waterproof Type

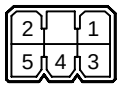	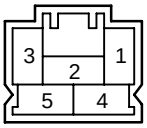	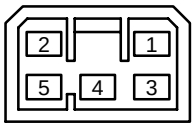	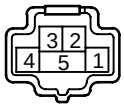
90980–10040	90980–10261	90980–10308	90980–10518
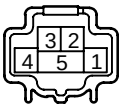	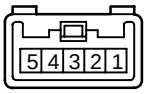	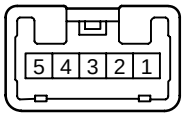	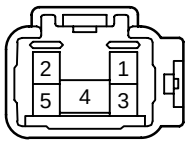
90980–10519	90980–10762	90980–10790	90980–10985
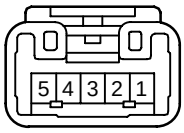	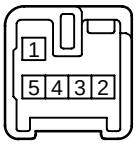	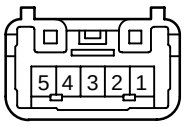	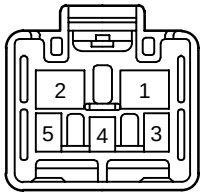
90980–11085	90980–11318	90980–11327	90980–11602
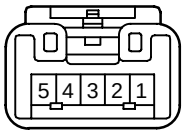	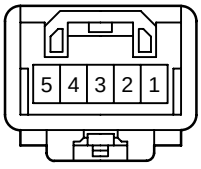	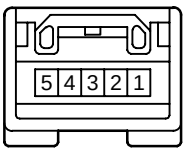	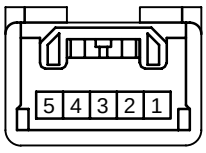
90980–11843	90980–11920	90980–11968	90980–12036
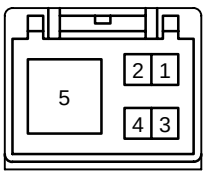	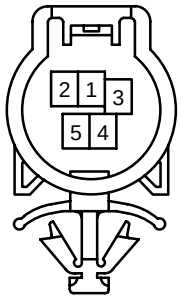		
90980–12050	90980–12189		

<MALE> 6P Non–waterproof Type

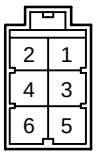	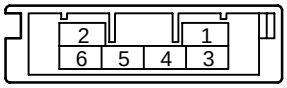	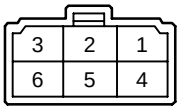	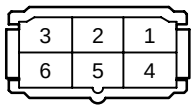
90980–10003	90980–10027	90980–10172	90980–10223
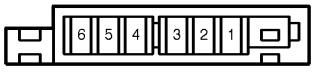			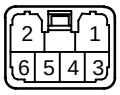
90980–10289	90980–10312	90980–10366 90980–10505	90980–10384 90980–10416 90980–10641
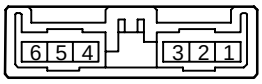	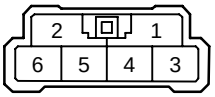	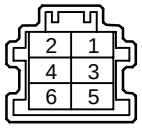	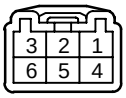
90980–10401	90980–10446	90980–10602	90980–10603
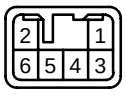	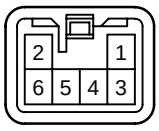	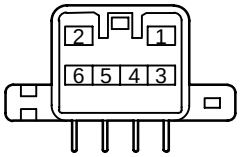	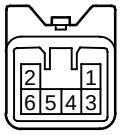
90980–10671	90980–10694	90980–10793	90980–10796
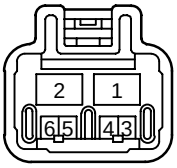	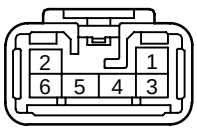	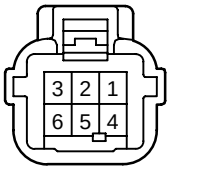	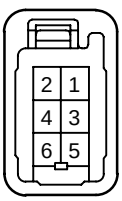
90980–10909	90980–10975	90980–10998	90980–11010

<MALE> 6P Non–waterproof Type

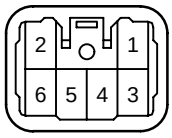 90980–11067	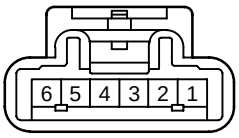 90980–11099	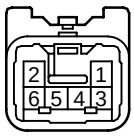 90980–11101	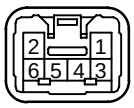 90980–11110
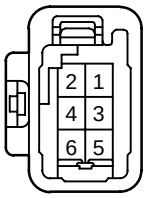 90980–11452	 90980–11487	 90980–11492	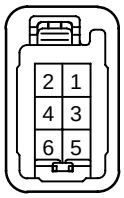 90980–11587
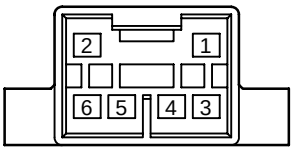 90980–11696	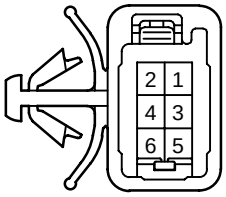 90980–11814	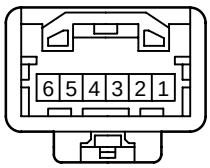 90980–12004	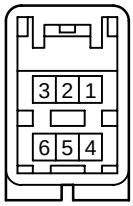 90980–12013
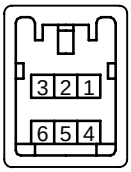 90980–12064	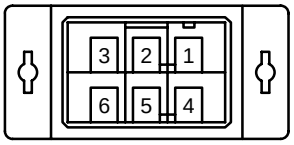 90980–12198	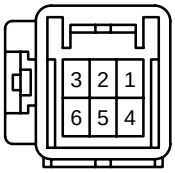 90980–12204	

<MALE> 7P Non–waterproof Type

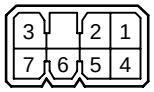 90980–10042	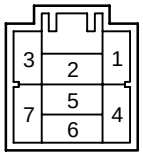 90980–10263	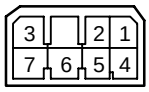 90980–10310	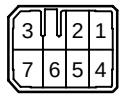 90980–10451
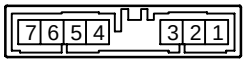 90980–10459	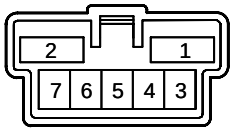 90980–10728 90980–10771	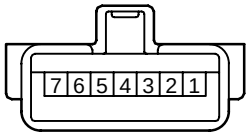 90980–11164	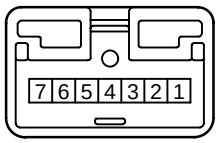 90980–11339
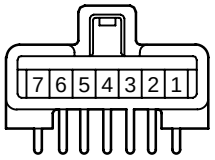 90980–11402	 90980–11528	 90980–11739	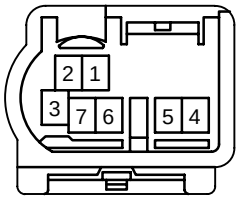 90980–12059
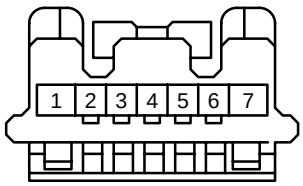 90980–12092			

<MALE> 8P Non–waterproof Type

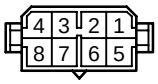 90980–10018	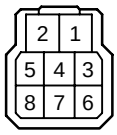 90980–10147	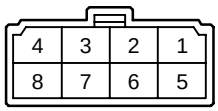 90980–10174
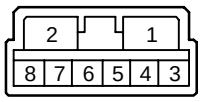 90980–10208 90980–10210 90980–10383 90980–10411	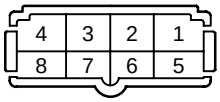 90980–10225	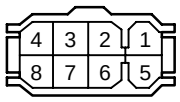 90980–10279
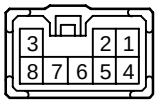 90980–10360	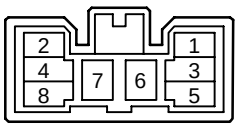 90980–10403	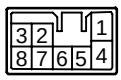 90980–10418
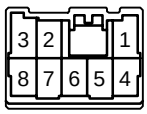 90980–10430 90980–10546	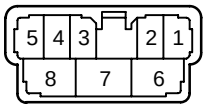 90980–10462	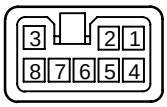 90980–10769

<MALE> 8P Non–waterproof Type

 90980–10798	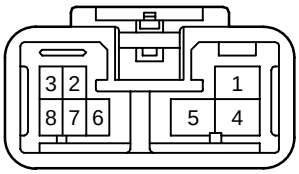 90980–10876 90980–11438	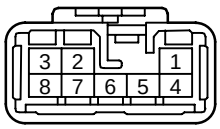 90980–10963
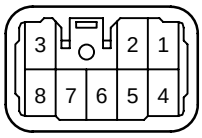 90980–11123	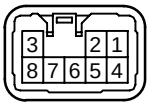 90980–11134	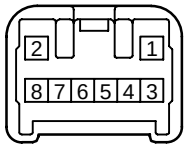 90980–11320
 90980–11353	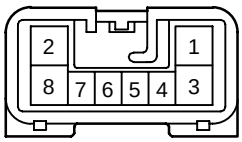 90980–11361	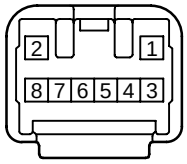 90980–11389
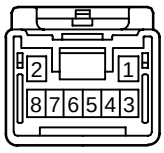 90980–11532	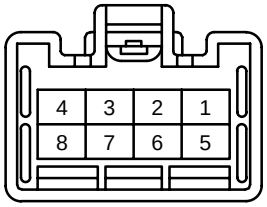 90980–11551	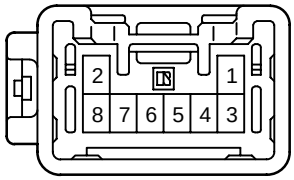 90980–11582

<MALE> 8P Non–waterproof Type

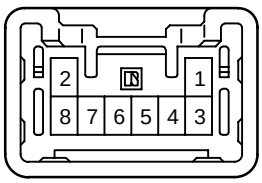 90980–11588	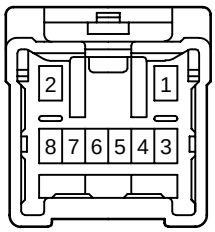 90980–11623	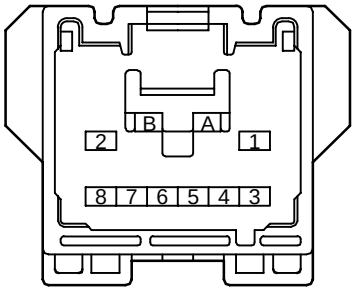 90980–11629
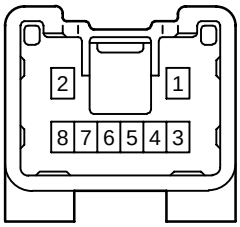 90980–11636	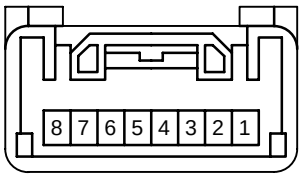 90980–12061	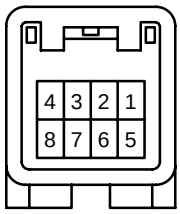 90980–12112
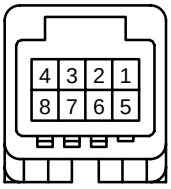 90980–12220		

<MALE> 9P Non–waterproof Type

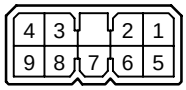	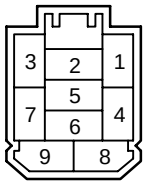	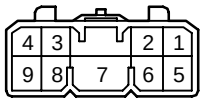
90980–10044	90980–10265	90980–10317
	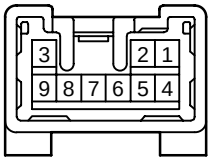	
90980–11534	90980–11543	90980–11709

<MALE> 10P Non–waterproof Type

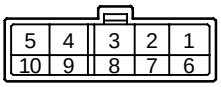 90980–10176	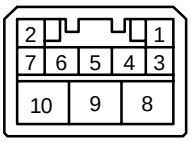 90980–10281	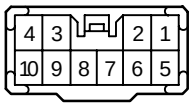 90980–10375 90980–10417 90980–10427 90980–10516
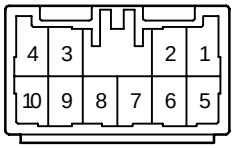 90980–10468	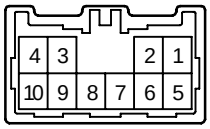 90980–10527 90980–10719	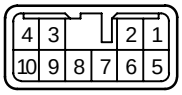 90980–10666
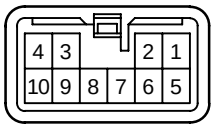 90980–10693	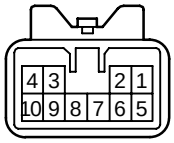 90980–10800	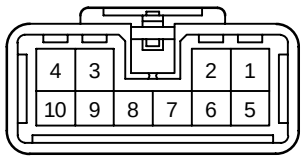 90980–10861
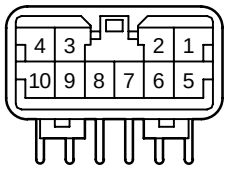 90980–10865 90980–11419	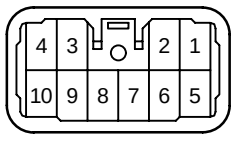 90980–10961	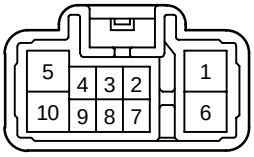 90980–10992

<MALE> 10P Non–waterproof Type

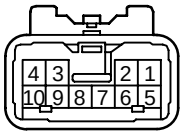 90980–11102	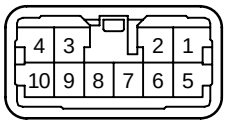 90980–11325 90980–11331	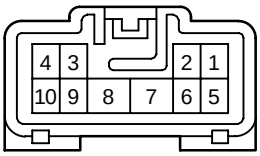 90980–11365
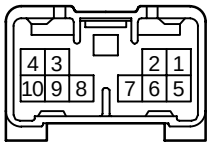 90980–11449	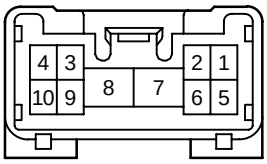 90980–11526	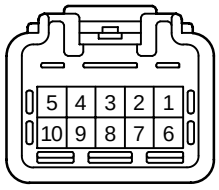 90980–11536
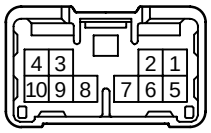 90980–11544	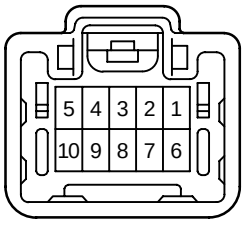 90980–11580	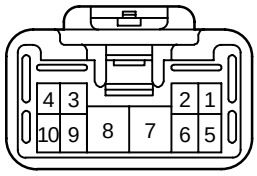 90980–11596
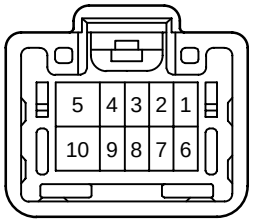 90980–11613	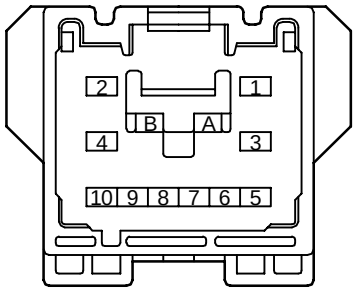 90980–11641	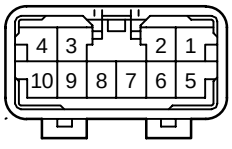 90980–11752

<MALE> 10P Non–waterproof Type

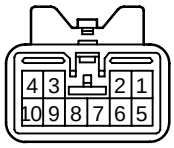 90980–11757	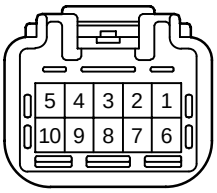 90980–11823	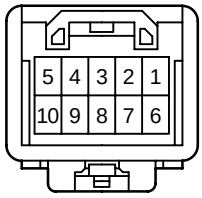 90980–11922
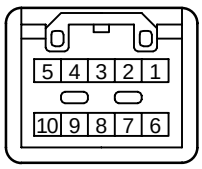 90980–11993	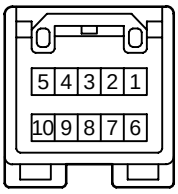 90980–12009	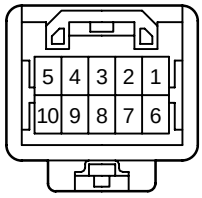 90980–12023
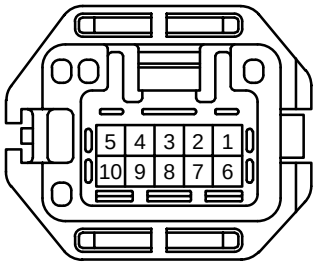 90980–12249		

<MALE> 11P Non–waterproof Type

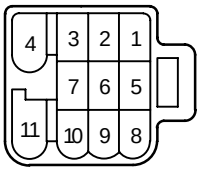 90980–10531	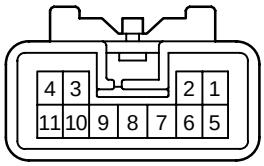 90980–10829	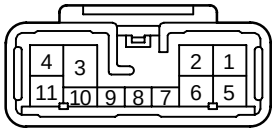 90980–10872
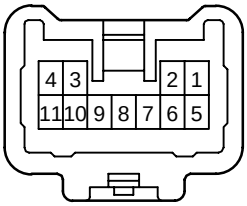 90980–11200	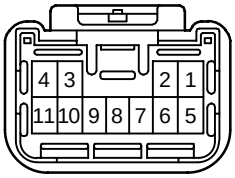 90980–11538	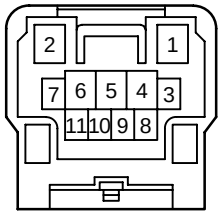 90908–12002
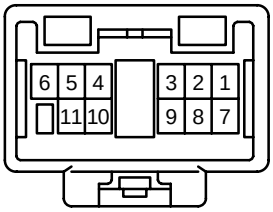 90980–12250		

<MALE> 12P Non–waterproof Type

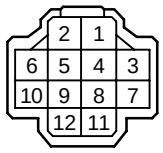 90980–10149	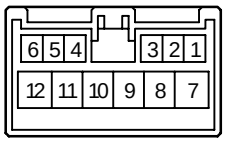 90980–10405	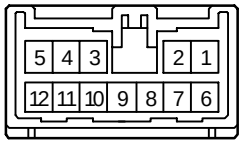 90980–10407 90980–10529
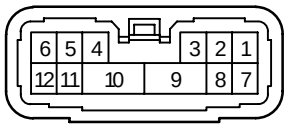 90980–10415	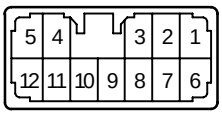 90980–10436 90980–10440	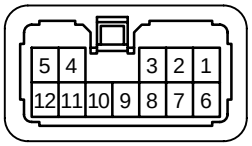 90980–10513
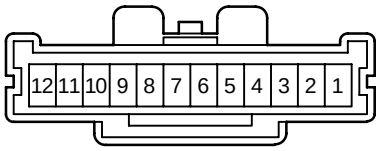 90980–10564	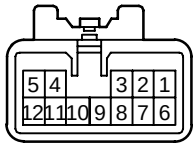 90980–10802	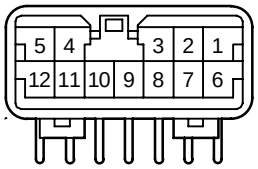 90980–10864
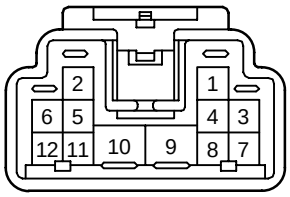 90980–10878	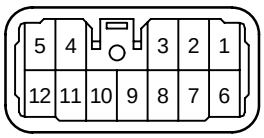 90980–10938 90980–11105	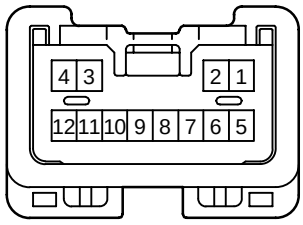 90980–11474

<MALE> 12P Non–waterproof Type

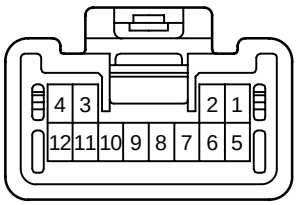	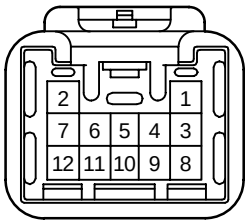	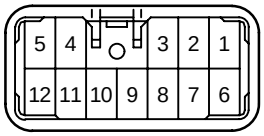
90980–11500	90980–11530	90980–11747

<MALE> 13P Non–waterproof Type

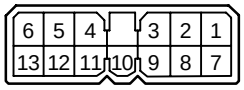	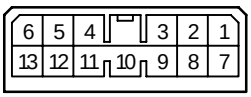	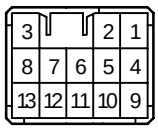
90980–10032	90980–10061	90980–10323
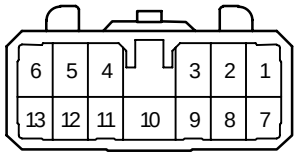	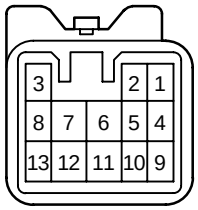	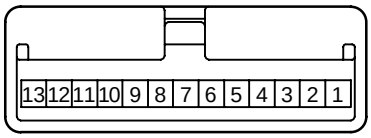
90980–10479	90980–10804	90980–11198
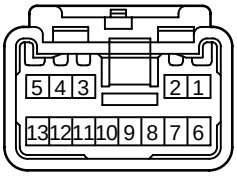	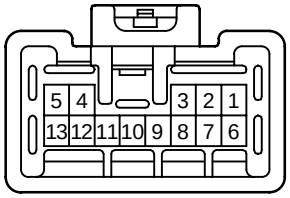	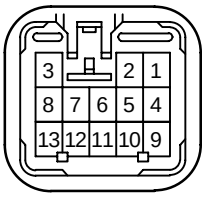
90980–11393	90980–11541	90980–11568
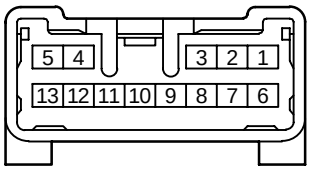	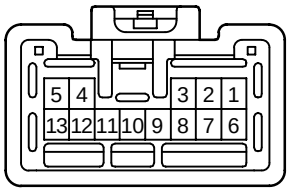	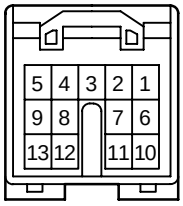
90980–11635	90980–11694	90980–11951

<MALE> 14P Non–waterproof Type

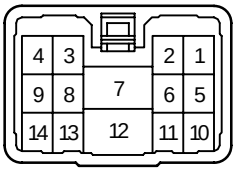

90980–10329

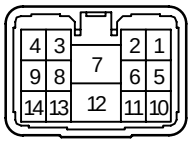

90980–10422

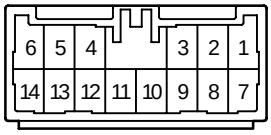

90980–10470

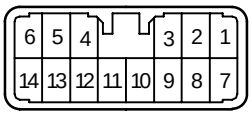

90980–10506
90980–10715

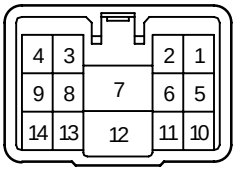

90980–10545

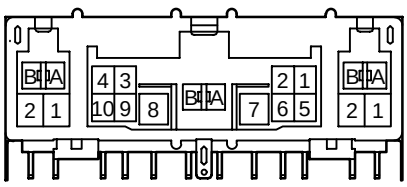

90980–10767

<MALE> 14P Non–waterproof Type

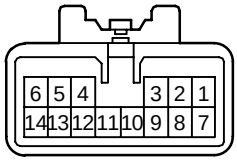

90980–10806

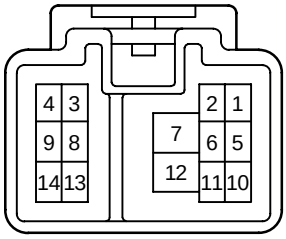

90980–10812

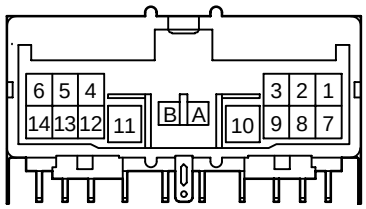

90980–10851

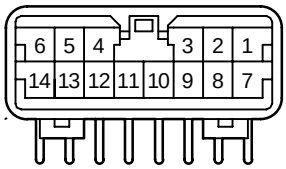

90980–10971
90980–11265

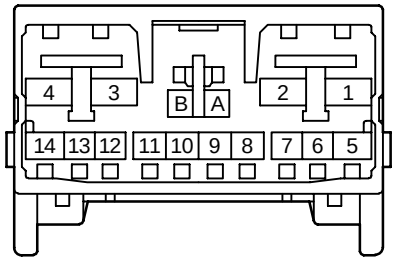

90980–11312

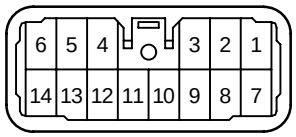

90980–11337

<MALE> 14P Non–waterproof Type

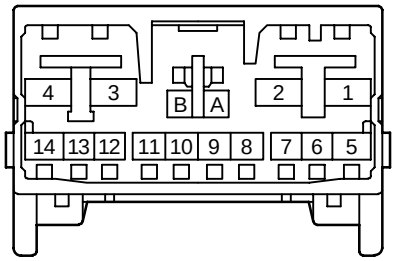

90980–11464

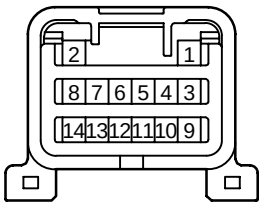

90980–11510

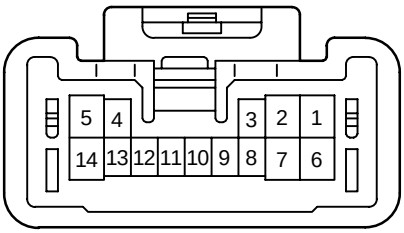

90980–11590

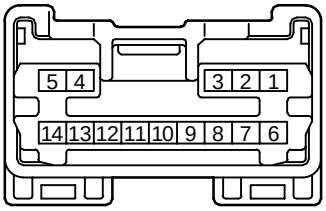

90980–11644
90980–11743
90980–11744

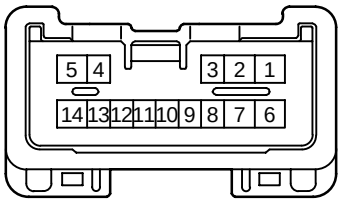

90980–11651

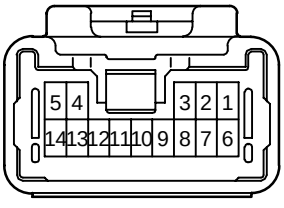

90980–11654

<MALE> 14P Non–waterproof Type

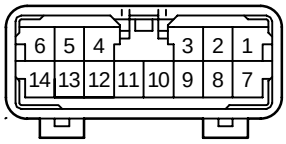

90980–11753

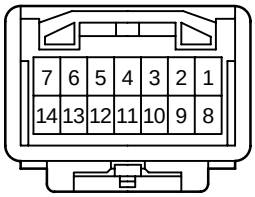

90980–11910

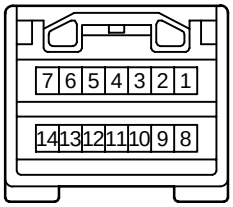

90980–11969
90980–12015

<MALE> 15P Non–waterproof Type

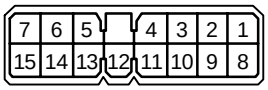

90980–10065

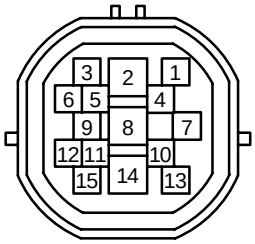

90980–10442

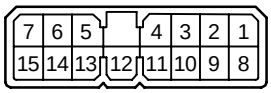

90980–10461

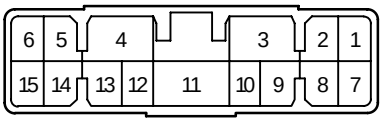

90980–10562

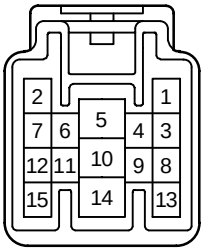

90980–10814

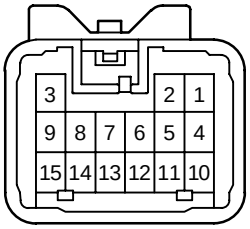

90980–10827

<MALE> 15P Non–waterproof Type

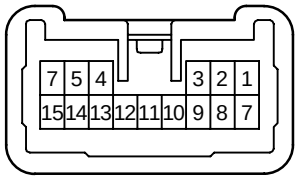

90980–11180

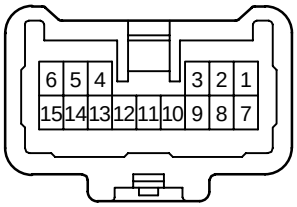

90980–11201

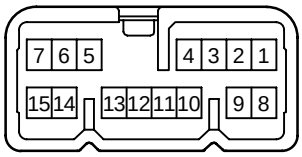

90980–11263

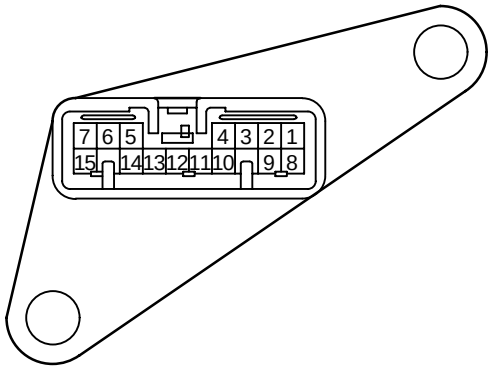

90980–11370

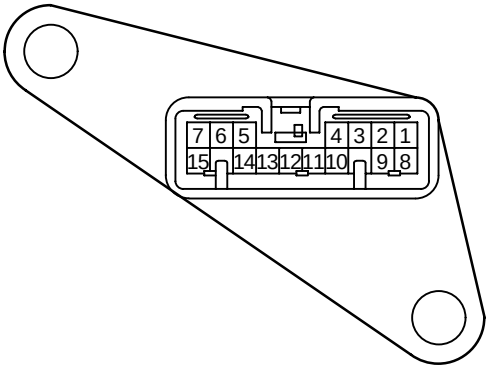

90980–11371

<MALE> 16P Non–waterproof Type

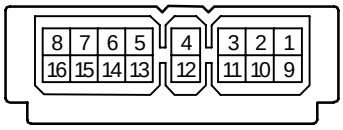

90980–10026

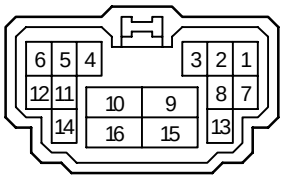

90980–10453

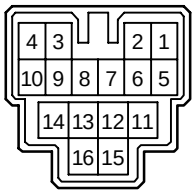

90980–10485

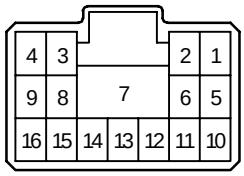

90980–10521

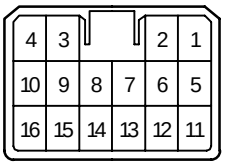

90980–10542

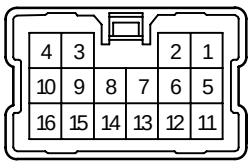

90980–10560

<MALE> 16P Non–waterproof Type

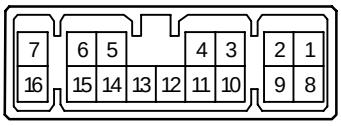

90980–10744

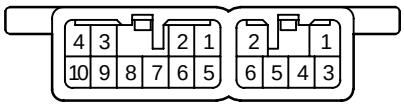

90980–10753

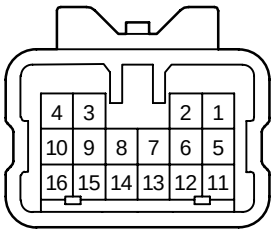

90980–10808
90980–11444

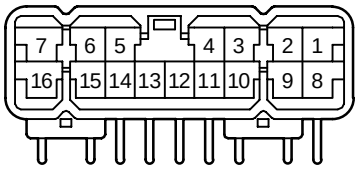

90980–10874

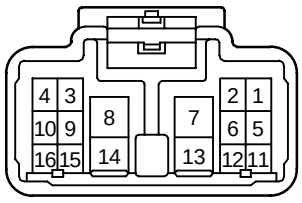

90980–10884

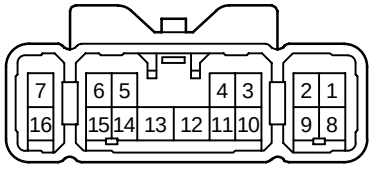

90980–11167

<MALE> 16P Non–waterproof Type

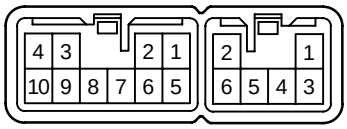

90980–11324

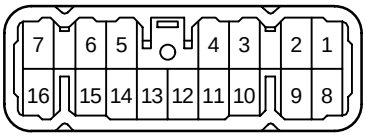

90980–11351

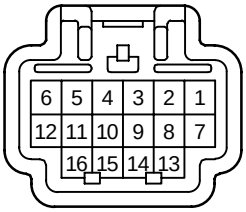

90980–11415

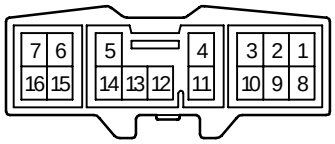

90980–11434

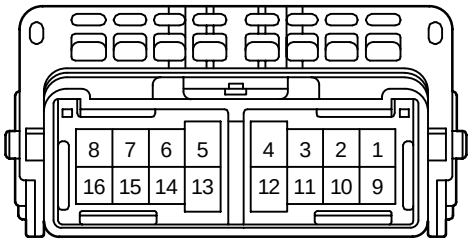

90980–11546

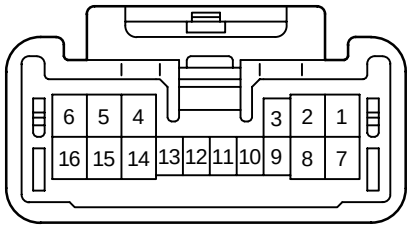

90980–11561

<MALE> 16P Non–waterproof Type

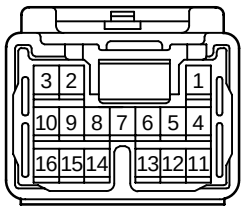

90980–11573

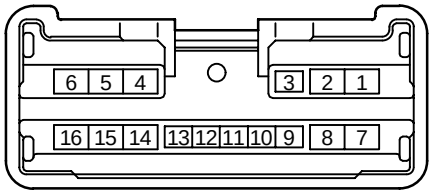

90980–11624

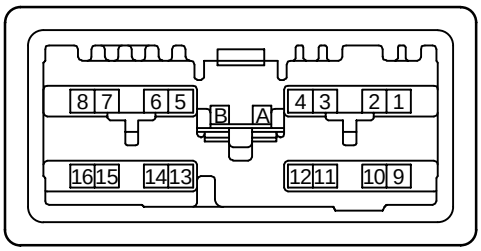

90980–11680

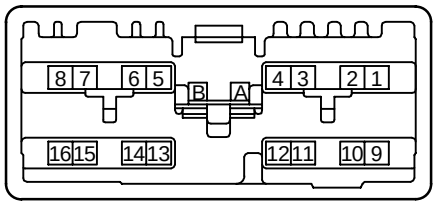

90980–11682

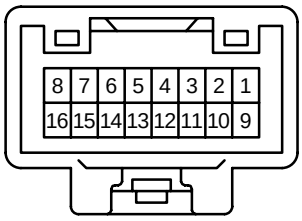

90980–12192

<MALE> 17P Non–waterproof Type

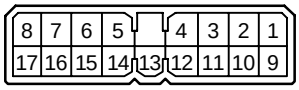

90980–10030

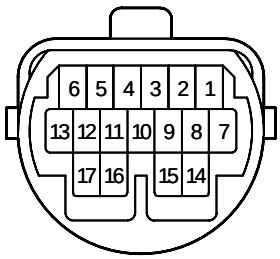

90980–10730

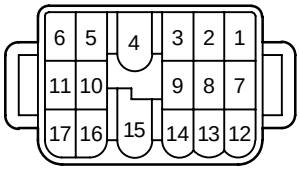

90980–11046

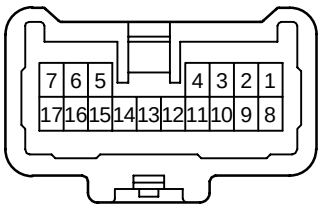

90980–11202

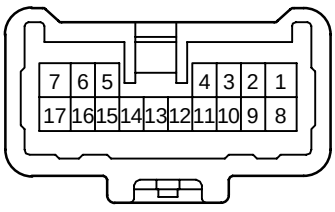

90980–11309

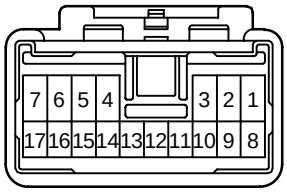

90980–11334

<MALE> 17P Non–waterproof Type

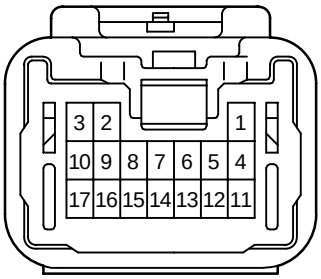

90980–11505

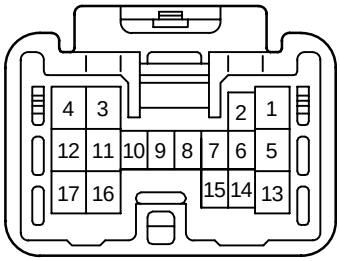

90980–11559

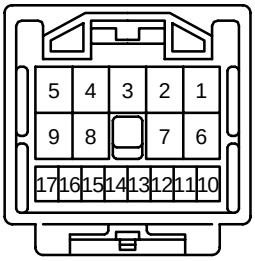

90980–12161

<MALE> 18P Non–waterproof Type

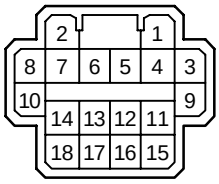

90980–10284

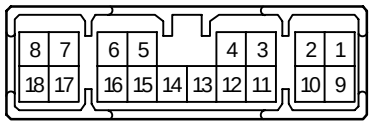

90980–10325

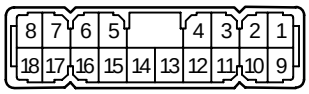

90980–10441

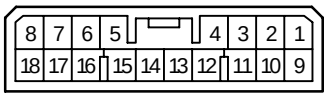

90980–10655
90980–11017

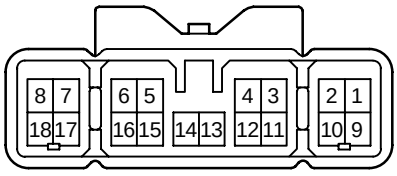

90980–10818

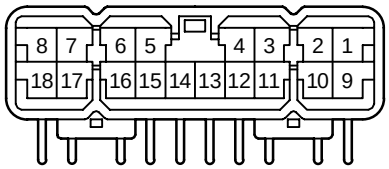

90980–10863

<MALE> 18P Non–waterproof Type

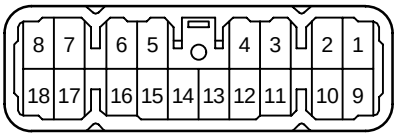

90980–10937
90980–11127

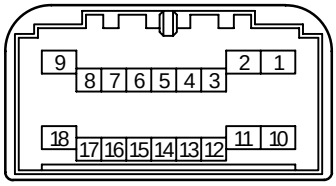

90980–11223

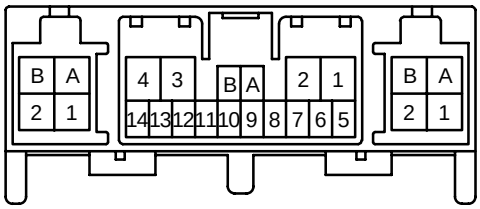

90980–11382

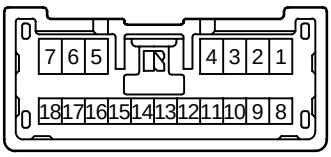

90980–11496

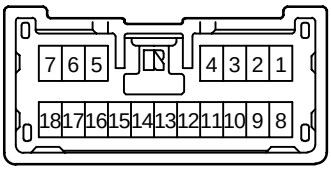

90980–11745

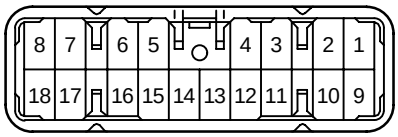

90980–11748

<MALE> 18P Non–waterproof Type

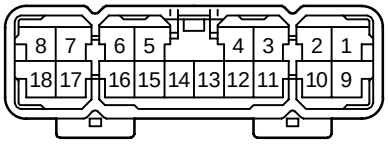

90980–11751

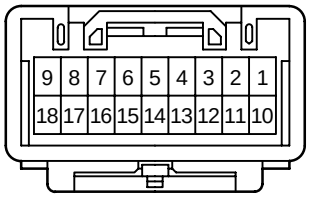

90980–11912

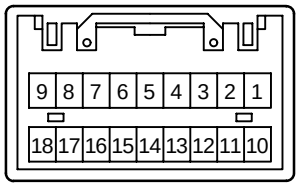

90980–11949

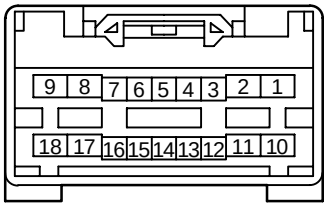

90980–12010

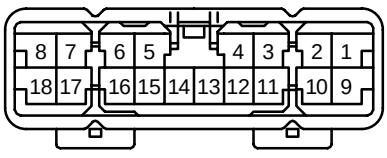

90980–12108

<MALE> 19P Non–waterproof Type

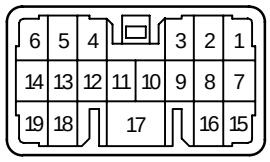

90980–10674

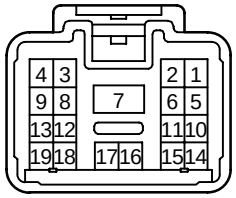

90980–10856

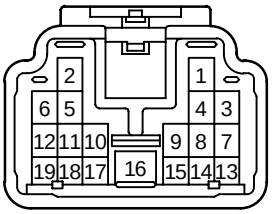

90980–10882

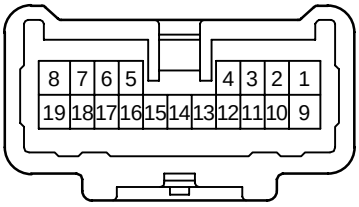

90980–11204

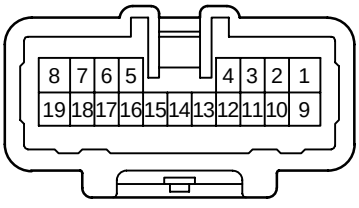

90980–11307

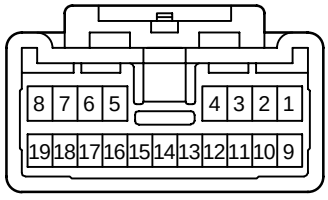

90980–11376

<MALE> 19P Non–waterproof Type

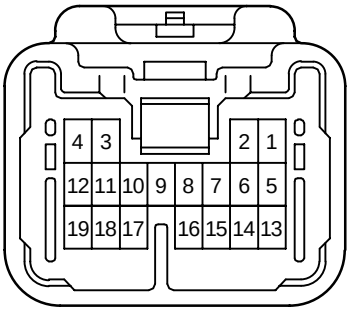

90980–11570

List of equivalent for the gold and tin–plated repair wire

Repair Wire Part No.	
Tin–plated (Sn)	Gold–plated (Au)
82998–12160 (2.3.M.U)	82998–24050
–12190 (1.8.F.U)	–12300
–12260 (2.3.M.S)	–24070
–12270 (2.3.F.S)	–24080
–12310 (1.0.F.U)	–12320
–12330 (2.3II.M.U)	–12350
–12340 (2.3II.F.U)	–12360
–12430 (2.3II.M.S)	–12450
–12440 (2.3II.F.S)	–12460
–12790 (2.3II.F.S)	–12780
–12670 (1.0III.M.U)	–12680
–12690 (1.0III.F.U)	–12700
–12720 (1.0III.F.S)	–12730
–24020 (1.0II.F.U)	–24110
–24090 (1.8II.M.U)	–24130

HOUSING PART NUMBER LIST

* Example : 82998–24050 indicates the gold–plated 82998–12160.

Part No. of Connector Body	Supply	Terminal	Male Female	Cav. No.	Sealing Ability	Part No. of Repair Wire		Sleeve Color	Memo
						160 mm Type	500 mm Type		
90980–						82998–	82998–		
10001	X	BHC	M	4	U	–	–	–	
10002	X	BHC	F	4	U	–	–	–	
10003	X	BHC	M	6	U	–	–	–	
10004	X	BHC	F	6	U	–	–	–	
10006	X	BHC	F	12	U	–	–	–	
10008	X	BHC	F	16	U	–	–	–	
10010	X	BHC	F	22	U	–	–	–	
10011	X	BHC	M	2	U	–	–	–	
10012	X	BHC	F	2	U	–	–	–	
10018	X	BHC	M	8	U	–	–	–	
10019	X	BHC	F	8	U	–	–	–	
10026	X	TODC	M	16	U	12080	–	L,Y	
10027	X	6.3 7.7	M	6 6	U	– 12010	– –	– Y	
10028	X	TODC	F	16	U	12090	–	L,Y	
10029	X	6.3 7.7	F	6 6	U	– 12020	– –	– Y	
10030	X	TODC	M	17	U	12080	–	L,Y	
10031	X	TODC	F	17	U	12090	–	L,Y	
10032	X	TODC	M	13	U	12080	–	L,Y	
10033	X	TODC	F	13	U	12090	–	L,Y	
10037	O	MIC	F	17	U	12120	–	L,Y	
10038	X	TODC	M	2	U	12080	–	L,Y	
10039	X	TODC	F	2	U	12090	–	L,Y	
10040	O	TODC	M	5	U	12080	–	L,Y	
10041	X	TODC	F	5	U	12090	–	L,Y	
10042	X	TODC	M	7	U	12080	–	L,Y	
10043	X	TODC	F	7	U	12090	–	L,Y	
10044	O	TODC	M	9	U	12080	–	L,Y	
10045	O	TODC	F	9	U	12090	–	L,Y	
10055	X	TODC	M	3	U	12080	–	L,Y	
10056	X	TODC	F	3	U	12090	–	L,Y	
10057	X	–	–	–	–	–	–	–	
10061	X	MIC	M	13	U	–	–	–	PCB
10062	O	MIC	F	13	U	12120	–	L,Y	
10063	X	MIC	M	21	U	–	–	–	PCB
10064	X	MIC	F	21	U	12120	–	L,Y	

HOUSING PART NUMBER LIST

Part No. of Connector Body	Supply	Terminal	Male Female	Cav. No.	Sealing Ability	Part No. of Repair Wire		Sleeve Color	Memo
						160 mm Type	500 mm Type		
90980–						82998–	82998–		
10065	X	TODC	M	15	U	12080	–	L,Y	
10066	X	TODC	F	15	U	12090	–	L,Y	
10068	X	TODC	M	9	U	–	–	–	PCB
10069	X	SL	F	2	U	12130	–	L,Y	
10070	O	SL	F	3	U	12130	–	L,Y	
10071	O	SL	F	7	U	12130	–	L,Y	
10072	X	6.3	F	3	U	12060	12580	Y	
10087	X	TODC	M	9	U	12080	–	L,Y	
10088	X	6.3	F	3	S	–	–	–	
10090	X	6.3	F	1	S	–	–	–	
10091	X	6.3	M	2	S	–	–	–	
10092	X	6.3	F	2	S	–	–	–	
10093	X	6.3	M	3	S	–	–	–	
10094	X	6.3	M	4	S	–	–	–	
10095	X	6.3	F	4	S	–	–	–	
10096	X	TODC	M	6	S	–	–	–	
10097	X	TODC	F	6	S	–	–	–	
10100	X	TODC	M	16	S	–	–	–	
10101	X	TODC	F	16	S	–	–	–	
10106	X	TODC	M	9	U	–	–	–	PCB
10108	X	SL	F	2	U	12130	–	L,Y	
10109	X	SL	F	2	U	12130	–	L,Y	
10110	X	6.3	F	3	S	–	–	–	
10111	X	FPC	F	3	U	–	–	–	
10112	X	FPC	F	8	U	–	–	–	
10113	X	FPC	F	8	U	–	–	–	
10114	O	7.7	M	1	S	–	–	–	
10115	O	7.7	F	1	S	–	–	–	
10116	X	6.3	F	2	S	–	–	–	
10117	X	TODC	M	5	U	12080	–	L,Y	
10119	X	FPC	F	8	U	–	–	–	
10121	X	TODC	F	2	U	12090	–	L,Y	
10122	X	7.7	M	2	S	–	–	–	
10123	X	7.7	F	2	S	–	–	–	
10124	X	6.3	F	2	U	–	–	–	
10125	X	TODC	M	1	S	–	–	–	
10126	X	TODC	M	4	U	12080	–	L,Y	
10127	X	TODC	F	4	U	12090	–	L,Y	
10130	X	TODC	M	5	U	–	–	–	PCB

HOUSING PART NUMBER LIST

Part No. of Connector Body	Supply	Terminal	Male Female	Cav. No.	Sealing Ability	Part No. of Repair Wire		Sleeve Color	Memo
						160 mm Type	500 mm Type		
90980–						82998–	82998–		
10131	X	LAC	M	22	U	12100	–	L,Y	
10132	O	LAC	F	13	U	12110	–	L,Y	
10133	X	LAC	F	9	U	12110	–	L,Y	
10138	X	MIC	M	13	U	–	–	–	PCB
10139	X	6.3	M	4	S	–	–	–	
10140	X	6.3	F	4	S	–	–	–	
10141	X	SL	F	2	U	12130	–	L,Y	
10142	X	6.3	F	4	U	–	–	–	
10143	X	FPC	F	3	U	–	–	–	
10144	X	6.3	M	4	U	–	–	–	
10145	X	6.3 7.7	M	3 3	U	– 12010	– –	– Y	
10146	X	6.3 7.7	F	2 1	U	– 12040	– –	– Y	
10147	X	TODC	M	8	U	12080	–	L,Y	
10148	X	TODC	F	8	U	12090	–	L,Y	
10149	X	TODC	M	12	U	12080	–	L,Y	
10150	X	TODC	F	12	U	12090	–	L,Y	
10151	X	MIC	M	22	U	–	–	–	PCB
10152	O	MIC	F	9	U	12120	–	L,Y	
10153	X	2.3	F	12	U	12170	–	L	
10154	X	6.3 7.7	M	3 3	U	– –	– –	– –	
10156	O	6.3	M	2	S	–	–	–	w/o Clamp
10157	O	6.3	F	2	S	–	–	–	
10158	X	FPC	F	10	U	–	–	–	
10159	X	FPC	F	10	U	–	–	–	
10160	X	7.7	M	1	U	12010	–	Y	
10161	X	6.3	M	5	S	–	–	–	w/o Clamp
10162	O	6.3	F	5	S	–	–	–	
10163	X	TODC	M	3	U	12080	–	L,Y	
10164	X	TODC	F	3	U	12090	–	L,Y	
10165	X	7.7	F	1	U	12020	–	Y	
10170	X	6.3	M	4	U	12050	–	Y	w/o Clamp
10171	O	6.3	F	4	U	12060	12580	Y	
10172	O	6.3	M	6	U	12050	–	Y	
10173	O	6.3	F	6	U	12060	12580	Y	
10174	O	6.3	M	8	U	12050	–	Y	
10175	O	6.3	F	8	U	12060	12580	Y	

HOUSING PART NUMBER LIST

Part No. of Connector Body	Supply	Terminal	Male Female	Cav. No.	Sealing Ability	Part No. of Repair Wire		Sleeve Color	Memo
						160 mm Type	500 mm Type		
90980– 10176	O	6.3	M	10	U	82998– 12050	82998– –	Y	
10177	O	6.3	F	10	U	12060	12580	Y	
10178	O	6.3	M	1	U	12050	–	Y	
10179	O	6.3	F	1	U	12060	12580	Y	
10182	O	TODC	M	1	U	12080	–	L,Y	
10183	O	TODC	F	1	U	12090	–	L,Y	
10184	X	TODC	F	2	S	–	–	–	
10185	X	7.7	F	2	U	12040	–	Y	
10186	X	6.3 7.7	M	2 1	U	12050 12030	– –	Y Y	
10187	X	6.3 7.7	M	2 1	U	12050 12030	– –	Y Y	
10188	X	6.3 7.7	M	2 1	U	12050 12030	– –	Y Y	
10189	X	6.3 7.7	F	2 1	U	12060 12040	12580 –	Y Y	
10190	X	EJ	M	3	S	–	–	–	
10191	X	EJ	F	3	S	–	–	–	
10192	X	EJ	M	2	S	–	–	–	
10193	X	EJ	F	2	S	–	–	–	
10194	X	TODC	M	6	S	–	–	–	
10195	X	TODC	F	6	S	–	–	–	
10196	X	6.3	F	4	U	12060	12580	Y	
10197	X	TODC	F	1	S	–	–	–	
10198	X	6.3 7.7	M	2 1	S	– –	– –	– –	
10199	X	6.3 7.7	F	2 1	S	– –	– –	– –	
10200	X	EJ	M	1	S	–	–	–	
10201	X	EJ	F	1	S	–	–	–	
10202	X	EJ	M	4	S	–	–	–	
10203	X	EJ	F	4	S	–	–	–	
10204	X	EJ	M	8	S	–	–	–	
10205	X	EJ	F	8	S	–	–	–	
10206	X	TODC	M	13	U	–	–	–	PCB
10207	X	TODC	F	21	U	12090	–	L,Y	
10208	X	6.3 TODC	M	8 8	U	– 12080	– –	– L,Y	w/ Flange

HOUSING PART NUMBER LIST

Part No. of Connector Body	Supply	Terminal	Male Female	Cav. No.	Sealing Ability	Part No. of Repair Wire		Sleeve Color	Memo
						160 mm Type	500 mm Type		
90980–						82998–	82998–		
10209	X	6.3	F	2	U	12060	12580	Y	
		TODC		6		12090	–	L,Y	
10210	X	6.3	M	2	U	12050	–	Y	w/o Clamp
		TODC		6		12080	–	L,Y	
10211	X	TODC	M	7	U	12080	–	L,Y	
10212	X	TODC	M	13	U	12080	–	L,Y	
10213	O	6.3	M	2	U	12050	–	Y	w/o Clamp
10214	O	6.3	F	2	U	12060	12580	Y	
10215	X	6.3	M	3	U	12050	–	Y	w/o Clamp
10216	O	6.3	F	3	U	12060	12580	Y	
10217	X	TODC	M	4	S	–	–	–	
10218	X	TODC	F	4	S	–	–	–	
10219	X	6.3	M	4	U	12050	–	Y	
10220	X	6.3	F	4	S	–	–	–	
10221	X	6.3	F	4	U	12060	12580	Y	
10222	X	6.3	F	3	U	12060	12580	Y	
10223	X	6.3	M	6	U	12050	–	Y	
10224	X	6.3	F	6	U	12060	12580	Y	
10225	X	6.3	M	8	U	12050	–	Y	
10228	X	HEAD-LAMP	F	3	U	24140	24200	L,Y	
10229	X	6.3	F	1	U	12060	12580	Y	
10231	X	6.3	M	3	U	12050	–	Y	
10232	X	6.3	F	3	U	12060	12580	Y	
10233	X	6.3	M	25	U	12050	–	Y	
		TODC		25		12080	–	L,Y	
10234	X	6.3	F	3	U	–	–	–	
10235	X	6.3	M	2	S	–	–	–	
		7.7		1		–	–	–	
10236	X	6.3	F	2	S	–	–	–	
		7.7		1		–	–	–	
10237	X	6.3	M	4	U	12050	–	Y	
10238	X	7.7	F	2	U	12020	–	Y	
10239	X	6.3	F	3	S	–	–	–	
10240	O	TODC	M	1	S	–	–	–	
10241	O	TODC	F	1	S	–	–	–	
10242	X	TODC	M	2	S	–	–	–	
10243	X	TODC	F	2	S	–	–	–	
10244	O	TODC	M	3	S	–	–	–	

HOUSING PART NUMBER LIST

Part No. of Connector Body	Supply	Terminal	Male Female	Cav. No.	Sealing Ability	Part No. of Repair Wire		Sleeve Color	Memo
						160 mm Type	500 mm Type		
90980–10245	X	TODC	F	3	S	82998––	82998––	–	
10246	O	6.3	M	1	S	–	–	–	
10247	O	6.3	F	1	S	–	–	–	
10248	X	6.3	M	3	S	–	–	–	w/o Clamp
10249	O	6.3	F	3	S	–	–	–	
10250	X	6.3	F	1	U	12060	12580	Y	
10251	X	6.3	M	1	U	12050	–	Y	w/o Clamp
10252	X	6.3	F	1	U	12060	12580	Y	
10253	X	6.3	M	1	U	12050	–	Y	
10254	X	6.3	F	1	U	12060	12580	Y	
10255	X	6.3	M	2	U	12050	–	Y	
10256	X	6.3	F	2	U	12060	12580	Y	
10257	X	6.3	M	3	U	12050	–	Y	w/o Clamp
10258	X	6.3	F	3	U	12060	12580	Y	
10259	X	6.3	M	4	U	12050	–	Y	
10260	X	6.3	F	4	U	12060	12580	Y	
10261	X	6.3	M	5	U	12050	–	Y	
10262	X	6.3	F	5	U	12060	12580	Y	
10263	X	6.3	M	7	U	12050	–	Y	
10264	X	6.3	F	7	U	12060	12580	Y	
10265	X	6.3	M	9	U	12050	–	Y	
10266	X	6.3	F	9	U	12060	12580	Y	
10267	X	MIC	M	9	U	–	–	–	PCB
10272	X	LC	M	8	U	–	–	–	
10273	X	LC	F	8	U	–	–	–	
10274	O	TODC	F	5	U	12090	–	L,Y	
10275	X	TODC	M	7	U	12080	–	L,Y	
10276	X	6.3	M	5	U	12050	–	Y	
10277	X	6.3	M	7	U	12050	–	Y	
10278	X	6.3	M	9	U	12050	–	Y	
10279	X	TODC	M	8	U	12080	–	L,Y	
10280	X	TODC	F	8	U	12090	–	L,Y	
10281	X	6.3 TODC	M	3 7	U	12050 12080	– –	Y L,Y	
10282	X	6.3 TODC	F	3 7	U	12060 12090	12580 –	Y L,Y	
10283	O	6.3	M	3	U	12050	–	Y	w/ Clamp
10284	X	TODC	M	18	U	12080	–	L,Y	
10285	X	TODC	F	18	U	12090	–	L,Y	

HOUSING PART NUMBER LIST

Part No. of Connector Body	Supply	Terminal	Male Female	Cav. No.	Sealing Ability	Part No. of Repair Wire		Sleeve Color	Memo
						160 mm Type	500 mm Type		
90980– 10286	X	TODC	M	2	U	82998– 12080	82998– –	L,Y	
10287	X	TODC	M	16	S	–	–	–	
10288	X	TODC	F	16	S	–	–	–	
10289	X	LC	M	6	U	–	–	–	
10290	X	LC	F	6	U	–	–	–	
10291	X	LC	M	14	U	–	–	–	
10292	X	LC	F	14	U	–	–	–	
10293	X	PULSE LOCK	M	52	U	–	–	–	PCB
10294	O	PULSE LOCK	F	10	U	12200	–	L,Y	
10295	O	PULSE LOCK	F	18	U	12210	–	L	
10296	O	PULSE LOCK	F	24	U	12210	–	L	
10297	X	TODC	M	2	U	12080	–	L,Y	
10298	X	TODC	F	2	U	12090	–	L,Y	
10299	X	6.3	M	3	U	12050	–	Y	
10300	X	6.3	M	3	U	12050	–	Y	w/ Flange
10301	X	MFPC	F	8	U	12150	–	L	
10302	O	MFPC	F	10	U	12150	–	L	
10303	O	MFPC	F	12	U	12150	–	L	
10304	X	MFPC	F	10	U	12150	–	L	
10305	X	6.3	M	2	U	12050	–	Y	w/ Clamp
10306	X	6.3 TODC	M	2 2	U	12050 12080	– –	Y L,Y	
10307	X	6.3 TODC	F	2 2	U	12060 12090	12580 –	Y L,Y	
10308	X	MIC	M	5	U	–	–	–	PCB
10309	X	MIC	F	5	U	12120	–	L,Y	
10310	X	MIC	M	7	U	–	–	–	PCB
10311	X	MIC	F	7	U	12120	–	L,Y	
10312	X	TODC	M	6	U	12080	–	L,Y	
10313	X	TODC	F	6	U	12090	–	L,Y	
10314	X	TODC	M	5	U	12080	–	L,Y	
10315	X	MODU	M	26	U	–	–	–	
10316	X	MODU	F	26	U	–	–	–	
10317	X	6.3 TODC	M	1 8	U	12050 12080	– –	Y L,Y	

HOUSING PART NUMBER LIST

Part No. of Connector Body	Supply	Terminal	Male Female	Cav. No.	Sealing Ability	Part No. of Repair Wire		Sleeve Color	Memo
						160 mm Type	500 mm Type		
90980–						82998–	82998–		
10318	X	6.3	F	1	U	12060	12580	Y	
		TODC		8		12090	–	L,Y	
10319	X	6.3	F	1	U	12060	12580	Y	
		TODC		10		12090	–	L,Y	
10320	X	2.3	F	2	U	12170	–	L	
10321	X	2.3	F	8	U	12170	–	L	
10322	O	2.3	F	10	U	12170	–	L	
10323	X	2.3	M	13	U	12160*	–	L	
10324	X	2.3	F	13	U	12170	–	L	
10325	O	2.3	M	18	U	12160*	–	L	
10326	O	2.3	F	18	U	12170	–	L	
10327	X	2.3	F	20	U	12170	–	L	
10328	X	2.3	F	22	U	12170	–	L	
10329	X	2.3	M	12	U	12160*	–	L	
		6.3		2		12050	–	Y	
10330	X	2.3	F	12	U	12170	–	L	
		6.3		2		12060	12580	Y	
10331	X	2.3	F	14	U	12170	–	L	
		6.3		1		12060	12580	Y	
10332	X	7.7	F	1	U	12040	–	Y	
10333	X	6.3	F	2	U	12060	12580	Y	
10334	X	6.3	F	6	U	12060	12580	Y	
10335	X	6.3	F	6	U	12060	12580	Y	
10336	X	6.3	F	8	U	12060	12580	Y	
10337	X	6.3	F	11	U	12060	12580	Y	
10338	X	6.3	F	11	U	12060	12580	Y	
10339	X	6.3	F	4	U	12060	12580	Y	
		7.7		1		12040	–	Y	
10340	X	6.3	F	2	U	12060	12580	Y	
		7.7		3		12040	–	Y	
10341	X	6.3	F	3	S	12540	–	Y	
10342	X	7.7	M	1	U	12030	–	Y	
10343	X	7.7	F	1	U	12040	–	Y	
10344	X	6.3	M	2	U	12050	–	Y	w/o Clamp
10345	X	6.3	F	2	U	12060	12580	Y	
10346	X	6.3	M	2	U	12050	–	Y	w/ Clamp
10347	O	6.3	M	3	S	12050	–	Y	w/ Clamp
10348	X	6.3	F	2	U	12060	12580	Y	

HOUSING PART NUMBER LIST

Part No. of Connector Body	Supply	Terminal	Male Female	Cav. No.	Sealing Ability	Part No. of Repair Wire		Sleeve Color	Memo
						160 mm Type	500 mm Type		
90980– 10349	X	PULSE LOCK	M	30	U	82998– –	82998– –	–	PCB
10350	X	PULSE LOCK	F	18	U	12200	–	L,Y	
10351	O	PULSE LOCK	F	12	U	12200	–	L,Y	
10352	X	TODC	F	2	S	–	–	–	
10353	O	TODC	F	3	S	–	–	–	
10354	X	2.3	M	2	U	12160*	–	L	w/o Clamp
10355	O	2.3	F	2	U	12170	–	L	
10356	O	7.7	M	2	U	12030	–	Y	
10357	O	7.7	F	2	U	12040	–	Y	
10358	X	6.3	F	8	U	12060	12580	Y	
10359	O	6.3	F	1	U	12060	12580	Y	
10360	X	2.3	M	8	U	12160*	–	L	
10361	X	2.3	M	20	U	12160*	–	L	
10362	O	SP	F	2	U	12530	–	L,Y	
10363	X	5.2	F	1	U	–	–	–	
10364	X	2.3	M	3	U	12160*	–	L	w/o Clamp
10365	O	2.3	F	3	U	12170	–	L	
10366	O	2.3	M	6	U	12160*	–	L	w/o Clamp
10367	O	2.3	F	6	U	12170	–	L	
10368	X	MFPC	F	14	U	12150	–	L	
10369	O	MFPC	F	14	U	12150	–	L	
10370	X	PULSE LOCK	M	42	U	–	–	–	PCB
10371	O	PULSE LOCK	F	14	U	12210	–	L	
10372	X	MFPC	F	12	U	12150	–	L	
10373	X	7.7 TODC	F	2 2	S	– –	– –	– –	
10374	X	7.7	M	2	S	–	–	–	
10375	X	2.3	M	10	U	12160*	–	L	w/o Flange
10376	X	SP SP	F	5 5	U	12520 12530	– –	L,Y L,Y	
10377	X	SP	F	10	U	12530	–	L,Y	
10378	O	MIC	F	4	U	12120	–	L,Y	
10379	X	TODC	M	9	S	–	–	–	
10380	X	TODC	F	9	S	–	–	–	w/o Clamp
10381	X	TODC	F	9	S	–	–	–	w/ Clamp

HOUSING PART NUMBER LIST

Part No. of Connector Body	Supply	Terminal	Male Female	Cav. No.	Sealing Ability	Part No. of Repair Wire		Sleeve Color	Memo
						160 mm Type	500 mm Type		
90980–						82998–	82998–		
10382	X	6.3 7.7	F	4 2	U	12060 12040	12580 –	Y Y	
10383	X	6.3 TODC	M	2 6	U	– 12080	– –	– L,Y	w/ Flange
10384	O	2.3	M	6	U	12160*	–	L	w/o Flange
10385	X	7.7	F	2	U	12040	–	Y	
10386	X	6.3	F	9	U	12060	12580	Y	
10392	X	TLC TODC	M	3 2	S	12280 –	– –	R –	
10393	X	TLC TODC	F	3 2	S	12290 –	– –	R –	
10394	X	TLC	M	3	S	12280	–	R	w/ Clamp
10395	X	TLC	F	3	S	12290	–	R	
10396	X	TLC	M	1	U	12220	–	L	
10397	X	2.3	F	12	U	12170	–	L	
10398	X	TLC	F	1	U	12230	–	L	
10399	O	TLC	M	4	U	12220	–	L	
10400	X	TLC	F	4	U	12230	–	L	
10401	O	TLC	M	6	U	12220	–	L	
10402	O	TLC	F	6	U	12230	–	L	
10403	X	TLC TODC	M	6 2	U	12220 12080	– –	L L,Y	
10404	X	TLC TODC	F	6 2	U	12230 12090	– –	L L,Y	
10405	X	2.3 TLC	M	6 6	U	12160* 12220	– –	L L	
10406	X	2.3 TLC	F	6 6	U	12170 12230	– –	L L	
10407	X	TLC	M	12	U	12220	–	L	
10408	X	TLC	F	12	U	12230	–	L	
10410	X	6.3	M	3	U	12050	–	Y	w/ Clamp
10411	X	6.3 TODC	M	2 6	U	12050 12080	– –	Y L,Y	w/ Clamp
10412	X	6.3	M	2	S	–	–	–	w/ Clamp
10413	X	2.3	M	18	U	12160*	–	L	
10414	O	2.3	F	6	U	12170	–	L	
10415	X	2.3 6.3	M	10 2	U	12160* 12050	– –	L Y	
10416	X	2.3	M	6	U	–	–	–	PCB

HOUSING PART NUMBER LIST

Part No. of Connector Body	Supply	Terminal	Male Female	Cav. No.	Sealing Ability	Part No. of Repair Wire		Sleeve Color	Memo
						160 mm Type	500 mm Type		
90980–10417	X	2.3	M	10	U	82998––	82998––	–	PCB
10418	X	2.3 TODC	M	6 2	U	12160* 12080	– –	L L,Y	
10419	X	2.3 TODC	F	6 2	U	12170 12090	– –	L L,Y	
10420	X	2.3	F	3	U	12170	–	L	
10421	X	2.3 6.3	F	10 2	U	12170 12060	– 12580	L Y	
10422	X	2.3 6.3	M	12 2	U	12160* 12050	– –	L Y	
10423	X	MIC	F	2	U	12120	–	L,Y	
10424	X	6.3	M	2	U	12050	–	Y	
10425	X	6.3	F	2	U	12060	12580	Y	
10426	X	MIC	F	2	U	12120	–	L,Y	
10427	X	2.3	M	10	U	12160*	–	L	w/ Flange
10428	O	HEAD-LAMP	F	3	U	24140	24200	L,Y	
10429	X	PULSE LOCK	M	24	U	–	–	–	PCB
10430	X	TLC	M	8	U	12220	–	L	
10431	X	TLC	F	8	U	12230	–	L	
10432	O	2.3	F	12	U	12170	–	L	
10433	X	2.3	M	1	U	12160*	–	L	w/o Clamp
10434	X	2.3	M	1	U	12160*	–	L	w/ Clamp
10435	X	2.3	F	1	U	12170	–	L	
10436	X	2.3	M	12	U	–	–	–	PCB
10437	O	2.3	M	2	U	12160*	–	L	w/ Clamp
10438	X	2.3	M	1	S	12260*	–	L	
10439	X	2.3	F	1	S	12270*	12600	L	
10440	X	2.3	M	12	U	–	–	–	PCB
10441	X	2.3	M	18	U	–	–	–	PCB
10442	X	1.8 6.3	M	12 3	U	12180 12050	– –	L Y	
10443	X	1.8 6.3	F	12 3	U	12190* 12060	– 12580	L Y	
10444	X	TLC	M	3	S	12280	–	R	w/o Clamp
10445	X	TODC	M	13	U	–	–	–	PCB
10446	X	6.3 7.7	M	4 2	U	12050 12030	– –	Y Y	

HOUSING PART NUMBER LIST

Part No. of Connector Body	Supply	Terminal	Male Female	Cav. No.	Sealing Ability	Part No. of Repair Wire		Sleeve Color	Memo
						160 mm Type	500 mm Type		
90980–						82998–	82998–		
10447	O	6.3	F	4	U	12060	12580	Y	
		7.7		2		12040	–	Y	
10448	X	6.3 II	M	4	U	–	–	–	
10449	X	6.3 II	F	8	U	24170	–	Y	
10450	X	6.3 II	F	11	U	24170	–	Y	
10451	X	6.3	M	7	U	12050	–	Y	
10452	X	6.3	F	7	U	12060	12580	Y	
10453	X	2.3	M	12	U	12160*	–	L	
		6.3		4		12050	–	Y	
10454	X	2.3	F	12	U	12170	–	L	
		6.3		4		12060	12580	Y	
10455	X	TLC	M	22	U	12220	–	L	
10456	X	TLC	F	22	U	12230	–	L	
10457	X	2.3	M	19	U	12160*	–	L	
		6.3		3		12050	–	Y	
10458	X	2.3	F	19	U	12170	–	L	
		6.3		3		12060	12580	Y	
10459	X	TLC	M	7	U	–	–	–	PCB
10460	X	TLC	F	7	U	12230	–	L	
10461	X	TODC	M	15	U	12080	–	L,Y	
10462	X	2.3	M	5	U	12160*	–	L	
		6.3		3		12050	–	Y	
10463	O	2.3	F	5	U	12170	–	L	
		6.3		3		12060	12580	Y	
10464	X	TODC	F	3	U	12090	–	L,Y	
10465	X	2.3	F	2	U	12170	–	L	
10466	X	TNS	M	4	U	12240	–	L	
10467	O	TNS	F	4	U	12250	–	L	
10468	X	TNS	M	10	U	12240	–	L	
10469	X	TNS	F	10	U	12250	–	L	
10470	O	TNS	M	14	U	12240	–	L	
10471	O	TNS	F	14	U	12250	–	L	
10472	X	2.3	M	12	U	12160*	–	L	
		TNS		9		12240	–	L	
10473	X	2.3	F	12	U	12170	–	L	
		TNS		9		12250	–	L	
10474	O	2.3	F	2	S	12270*	12600	L	
10475	O	2.3	M	4	S	12260*	–	L	
10476	O	2.3	F	4	S	12270*	12600	L	

HOUSING PART NUMBER LIST

Part No. of Connector Body	Supply	Terminal	Male Female	Cav. No.	Sealing Ability	Part No. of Repair Wire		Sleeve Color	Memo
						160 mm Type	500 mm Type		
90980–10477	X	2.3	M	6	S	82998–12260*	82998– –	L	
10478	X	2.3	F	6	S	12270*	12600	L	
10479	X	2.3 6.3	M	12 1	U	12160* 12050	– –	L Y	
10480	X	2.3 6.3	F	12 1	U	12170 12060	– 12580	L Y	
10481	O	6.3	F	2	U	12060	12580	Y	
10482	X	2.3	F	2	U	12170	–	L	
10483	X	2.3	F	3	U	12170	–	L	
10484	X	2.3	F	4	U	12170	–	L	
10485	X	2.3 TODC	M	10 6	U	12160* 12080	– –	L L,Y	
10486	X	2.3 TODC	F	10 6	U	12170 12090	– –	L L,Y	
10487	O	FTC	F	5	U	12510	–	L,Y	
10488	O	FTC	F	5	U	12510	–	L,Y	
10489	O	FTC	F	3	U	12510	–	L,Y	
10490	O	FTC	F	3	U	12510	–	L,Y	
10491	X	MIC	F	2	U	12120	–	L,Y	
10492	X	2.3	M	3	S	12260*	–	L	w/o Clamp
10493	X	2.3	M	3	S	12260*	–	L	w/ Clamp
10494	X	2.3	F	3	S	12270*	12600	L	
10495	O	2.3	M	2	S	12260*	–	L	
10496	O	2.3	F	2	S	12270*	12600	L	
10497	X	2.3	M	2	S	12260*	–	L	
10498	O	2.3	F	2	S	12270*	12600	L	
10499	X	6.3	M	1	U	12050	–	Y	w/ Clamp
10500	X	2.3	M	3	S	12260*	–	L	
10501	X	2.3	F	3	S	12270*	12600	L	
10502	X	2.3	M	4	U	12160*	–	L	
10503	X	2.3	M	4	U	12160*	–	L	
10504	O	2.3	F	4	U	12170	–	L	
10505	X	2.3	M	6	U	12160*	–	L	w/ Clamp
10506	X	2.3	M	14	U	–	–	–	PCB
10507	X	2.3	F	14	U	12170	–	L	
10508	X	2.3	M	20	U	–	–	–	PCB
10509	X	TODC	F	5	U	12090	–	L,Y	
10510	X	TNS	M	4	S	–	–	–	w/o Clamp
10511	X	TNS	F	2	U	12250	–	L	

HOUSING PART NUMBER LIST

Part No. of Connector Body	Supply	Terminal	Male Female	Cav. No.	Sealing Ability	Part No. of Repair Wire		Sleeve Color	Memo
						160 mm Type	500 mm Type		
90980–10512	X	TNS	F	2	U	82998–12250	82998– –	L	
10513	O	2.3	M	12	U	12160*	–	L	
10514	X	2.3 6.3	F	2 2	U	12170 12060	– 12580	L Y	
10515	X	2.3	F	4	U	12170	–	L	
10516	X	2.3	M	10	U	–	–	–	PCB
10517	X	2.3 6.3 7.7	F	4 2 2	U	12170 12060 12040	– 12580 –	L Y Y	
10518	X	2.3 6.3	M	4 1	U	12160* 12050	– –	L Y	
10519	X	2.3 6.3	M	4 1	U	12160* 12050	– –	L Y	
10520	X	2.3 6.3	F	4 1	U	12170 12060	– 12580	L Y	
10521	X	2.3 7.7	M	15 1	U	12160* 12030	– –	L Y	
10522	X	2.3 7.7	F	15 1	U	12170 12040	– –	L Y	
10523	X	TNS	F	8	U	12250	–	L	
10524	X	TNS	F	12	U	12250	–	L	
10525	X	TNS	F	16	U	12250	–	L	
10526	O	TNS	F	22	U	12250	–	L	
10527	X	TLC	M	10	U	–	–	–	PCB
10528	O	TLC	F	10	U	12230	–	L	
10529	X	TLC	M	12	U	–	–	–	PCB
10530	X	2.3 6.3	F	17 1	U	12170 12060	– 12580	L Y	
10531	X	2.3	M	11	U	12160*	–	L	
10532	O	2.3	F	2	S	12270*	12600	L	
10533	X	2.3	M	2	S	12260*	–	L	
10534	X	2.3	F	2	S	12270*	12600	L	
10535	X	2.3	M	3	U	–	–	–	PCB
10536	X	2.3 6.3	F	8 1	U	12170 12060	– 12580	L Y	
10537	X	2.3 6.3	F	10 1	U	12170 12060	– 12580	L Y	
10538	X	2.3	F	14	U	12170	–	L	
10539	X	2.3	F	16	U	12170	–	L	

HOUSING PART NUMBER LIST

Part No. of Connector Body	Supply	Terminal	Male Female	Cav. No.	Sealing Ability	Part No. of Repair Wire		Sleeve Color	Memo
						160 mm Type	500 mm Type		
90980–						82998–	82998–		
10542	X	2.3	M	16	U	12160*	–	L	
10543	X	2.3	F	16	U	12170	–	L	
10544	X	2.3	M	3	U	12160*	–	L	
10545	X	2.3	M	12	U	12160*	–	L	
		6.3		2		12050	–	Y	
10546	X	TLC	M	8	U	12220	–	L	
10547	X	2.3	M	12	S	12260*	–	L	
		6.3		2		–	–	–	
		7.7		2		–	–	–	
10548	X	2.3	F	12	S	12270*	12600	L	
10549	X	6.3	F	2	S	–	–	–	
		7.7		2		–	–	–	
10550	X	2.3	F	3	S	12270*	12600	L	
		6.3		2		–	–	–	
10551	X	6.3	F	4	S	–	–	–	
10552	O	TNS	M	22	U	12240	–	L	
10553	X	TLC	M	3	S	12280	–	R	w/ Clamp
10554	O	TLC	F	3	S	12290	–	R	
10555	X	2.3	M	2	S	12260*	–	L	
10556	X	2.3	F	2	S	12270*	12600	L	
10557	X	TLC	M	5	S	12280	–	R	w/ Clamp
10558	X	TLC	F	5	S	12290	–	R	
10559	X	7.7	F	2	U	12040	–	Y	
10560	X	2.3	M	16	U	12160*	–	L	
10561	X	2.3	F	16	U	12170	–	L	
10562	X	2.3	M	12	U	12160*	–	L	
		6.3		2		12050	–	Y	
		7.7		1		12030	–	Y	
10563	X	2.3	F	12	U	12170	–	L	
		6.3		2		12060	12580	Y	
		7.7		1		12040	–	Y	
10564	X	1.8	M	12	U	12180	–	L	
10565	X	1.8	F	12	U	12190*	–	L	
10566	X	6.3	M	2	S	–	–	–	
10567	X	6.3	F	2	S	12540	–	Y	
10568	X	TODC	M	12	S	–	–	–	
10569	X	TODC	F	12	S	–	–	–	
10570	X	TLC	M	5	S	12280	–	R	w/o Clamp
10571	X	2.3	M	2	S	12260*	–	L	

HOUSING PART NUMBER LIST

Part No. of Connector Body	Supply	Terminal	Male Female	Cav. No.	Sealing Ability	Part No. of Repair Wire		Sleeve Color	Memo
						160 mm Type	500 mm Type		
90980– 10572	O	2.3	F	2	S	82998– 12270*	82998– 12600	L	
10573	O	2.3	M	3	U	12160*	–	L	w/ Clamp
10574	X	HEAD-LAMP	F	3	S	24150	24190	L,Y	
10575	O	2.3	M	2	S	12260*	–	L	
10576	X	2.3	F	2	S	12270*	12600	L	
10577	O	TLC	M	3	S	12280	–	R	w/ Clamp
10578	X	2.3	F	2	S	12270*	12600	L	
10579	X	HEAD-LAMP	F	3	S	24150	24190	L,Y	
10580	O	2.3	M	2	S	12260*	–	L	
10581	X	2.3	F	2	S	12270*	12600	L	
10582	X	2.3	M	2	S	12260*	–	L	
10583	X	2.3	F	2	S	12270*	12600	L	
10584	X	TNS	M	38	U	–	–	–	PCB
10585	X	TNS	F	24	U	12250	–	L	
10586	X	TNS	M	26	U	–	–	–	PCB
10587	O	TNS	F	26	U	12250	–	L	
10588	X	TNS	M	20	U	–	–	–	PCB
10589	X	TNS	F	20	U	12250	–	L	
10590	O	2.3	M	4	S	12260*	–	L	
10591	X	2.3	F	4	S	12270*	12600	L	
10592	O	2.3	M	2	S	12260*	–	L	
10593	X	2.3	F	2	S	12270*	12600	L	
10594	X	2.3	M	2	S	12260*	–	L	
10595	X	2.3	F	2	S	12270*	12600	L	
10596	X	2.3	M	6	S	12260*	–	L	
10597	X	2.3	F	6	S	12270*	12600	L	
10598	O	2.3	F	2	S	12270*	12600	L	
10599	O	TNS	M	26	U	12240	–	L	
10600	X	2.3	M	4	U	12160*	–	L	
10601	O	2.3	F	4	U	12170	–	L	
10602	X	2.3	M	6	U	12160*	–	L	
10603	X	2.3	M	6	U	12160*	–	L	
10604	X	2.3	F	6	U	12170	–	L	
10605	X	2.3	F	6	U	12170	–	L	
10606	X	1.8	M	34	U	12180	–	L	
10607	X	1.8	F	20	U	12190*	–	L	
10608	X	1.8	F	14	U	12190*	–	L	
10609	O	2.3	F	2	S	12270*	12600	L	

HOUSING PART NUMBER LIST

Part No. of Connector Body	Supply	Terminal	Male Female	Cav. No.	Sealing Ability	Part No. of Repair Wire		Sleeve Color	Memo
						160 mm Type	500 mm Type		
90980–						82998–	82998–		
10610	X	2.3	F	1	U	12170	–	L	
		TNS		4		12250	–	L	
10611	X	2.3	F	8	U	12170	–	L	
		TNS		8		12250	–	L	
10612	X	2.3	F	10	U	12170	–	L	
		TNS		10		12250	–	L	
10613	X	TNS	F	16	U	12250	–	L	
10614	X	TNS	F	16	U	12250	–	L	
10615	X	TODC	M	7	U	–	–	–	PCB
10616	X	6.3	F	4	S	12540	–	Y	
10617	X	2.3	F	2	S	12270*	12600	L	
10618	X	6.3	F	2	U	12060	12580	Y	
		7.7		1		12040	–	Y	
10619	O	6.3	F	1	U	12060	12580	Y	
10620	X	TLC	M	2	U	12220	–	L	
10621	X	TLC	F	2	U	12230	–	L	
10622	X	2.3	F	2	S	12270*	12600	L	
10623	X	2.3	F	2	S	12270*	12600	L	
10624	X	2.3	F	5	S	12270*	12600	L	
10625	X	2.3	M	2	S	12260*	–	L	w/ Clamp
10626	X	2.3	F	2	S	12270*	12600	L	
10627	X	TLC	M	7	S	12280	–	R	
10628	X	TLC	F	7	S	12290	–	R	
10629	X	2.3	F	3	S	12270*	12600	L	
10630	X	2.3	M	18	U	–	–	–	PCB
10631	X	2.3	F	5	U	12170	–	L	
10632	X	2.3	F	12	U	12170	–	L	
10633	X	TLC	F	14	U	12230	–	L	
10634	X	TLC	F	14	U	12230	–	L	
10635	X	TLC	F	16	U	12230	–	L	
10636	X	TLC	F	16	U	12230	–	L	
10637	X	2.3	F	2	U	12170	–	L	
10638	X	2.3	F	3	U	12170	–	L	
10639	X	2.3	M	20	U	12160*	–	L	
10640	X	2.3	F	20	U	12170	–	L	
10641	X	2.3	M	6	U	12160*	–	L	w/ Flange
10642	X	2.3	M	5	S	–	–	–	PCB
10643	X	2.3	F	6	S	12270*	12600	L	
10644	X	2.3	F	5	U	12170	–	L	

HOUSING PART NUMBER LIST

Part No. of Connector Body	Supply	Terminal	Male Female	Cav. No.	Sealing Ability	Part No. of Repair Wire		Sleeve Color	Memo
						160 mm Type	500 mm Type		
90980–10645	O	MFPC	F	4	U	82998–12150	82998–––	L	
10646	X	6.3	M	4	S	–	–	–	
10647	X	6.3	M	5	S	–	–	–	w/ Clamp
10648	O	2.3	M	4	S	12260*	–	L	
10649	X	2.3	F	4	S	12270*	12600	L	
10650	O	2.3	M	6	S	12260*	–	L	w/ Clamp
10651	X	2.3	F	6	S	12270*	12600	L	
10652	X	7.7	F	1	U	12040	–	Y	
10653	X	1.8	M	13	S	–	–	–	
10654	X	1.8	F	13	S	12620	–	L	
10655	X	1.8	M	18	U	–	–	–	PCB
10656	X	1.8	F	18	U	12190*	–	L	
10657	X	1.8	M	30	U	–	–	–	PCB
10658	O	1.8	F	12	U	12190*	–	L	
10659	X	FTC	F	5	U	12510	–	L,Y	
10660	X	2.3	F	3	U	12170	–	L	
10661	X	TNS	M	14	U	–	–	–	PCB
10662	X	TNS	M	4	S	–	–	–	
10663	X	TNS	F	4	S	–	–	–	Outer
10664	X	TNS	F	4	S	–	–	–	Inner
10665	X	2.3	M	2	S	12260*	–	L	
10666	X	2.3	M	10	U	–	–	–	PCB
10667	X	2.3	M	10	U	–	–	–	PCB
10668	X	2.3	M	10	U	–	–	–	PCB
10669	O	2.3	F	10	U	12170	–	L	
10670	X	2.3	M	6	U	–	–	–	PCB
10671	X	2.3	M	6	U	–	–	–	PCB
10672	O	2.3	F	6	U	12170	–	L	
10673	X	6.3 7.7	F	4 2	U	12060 12040	12580 –	Y Y	
10674	X	2.3 6.3	M	18 1	U	12160* 12050	– –	L Y	
10675	X	2.3 6.3	F	18 1	U	12170 12060	– 12580	L Y	
10676	X	TLC	M	7	S	12280	–	R	
10677	X	TLC	M	9	S	12280	–	R	
10678	X	TLC	F	9	S	12290	–	R	
10679	O	2.3	F	2	U	12170	–	L	
10680	X	TLC	M	10	U	–	–	–	PCB

HOUSING PART NUMBER LIST

Part No. of Connector Body	Supply	Terminal	Male Female	Cav. No.	Sealing Ability	Part No. of Repair Wire		Sleeve Color	Memo
						160 mm Type	500 mm Type		
90980–10681	X	TNS	M	20	U	82998––	82998––	–	PCB
10682	X	TNS	M	3	S	–	–	–	
10683	X	TNS	F	3	S	–	–	–	
10684	X	TNS	F	3	S	–	–	–	
10685	X	2.3 6.3	F	2 2	S	12270* 12540	12600 –	L Y	
10686	O	2.3 6.3	F	7 2	S	12270* 12540	12600 –	L Y	
10687	X	2.3	M	2	U	12160*	–	L	
10688	X	5.2	F	1	U	–	–	–	
10689	X	2.3	M	3	S	12260*	–	L	
10690	X	2.3	F	3	S	12270*	12600	L	
10691	X	TNS	M	4	U	–	–	–	PCB
10692	X	TNS	F	4	U	12250	–	L	
10693	X	2.3	M	10	U	12160*	–	L	
10694	X	2.3	M	6	U	12160*	–	L	
10695	X	2.3	F	3	S	12270*	12600	L	
10696	O	1.8	F	20	U	12190*	–	L	
10697	O	1.8	F	14	U	12190*	–	L	
10698	X	TLC	M	3	S	12280	–	R	
10699	X	TLC	M	10	U	–	–	–	PCB
10700	X	6.3	M	2	U	12050	–	Y	
10701	X	6.3	F	4	S	12540	–	Y	
10702	O	2.3	F	2	S	12270*	12600	L	
10703	X	6.3	F	1	U	12060	12580	Y	
10704	X	6.3	F	3	U	12060	12580	Y	
10705	X	6.3	F	1	S	–	–	–	
10706	O	2.3	F	2	S	12270*	12600	L	
10707	X	2.3	M	2	S	12260*	–	L	
10708	X	6.3	F	3	S	–	–	–	
10709	X	2.3 TLC	M	2 3	S	12260* 12280	– –	L R	
10710	X	2.3 TLC	F	2 3	S	12270* 12290	12600 –	L R	
10711	O	1.8	F	4	S	12620	–	L	
10712	X	2.3	F	5	S	12270*	12600	L	
10713	X	6.3 7.7	F	3 2	U	12060 12040	12580 –	Y Y	

HOUSING PART NUMBER LIST

Part No. of Connector Body	Supply	Terminal	Male Female	Cav. No.	Sealing Ability	Part No. of Repair Wire		Sleeve Color	Memo
						160 mm Type	500 mm Type		
90980– 10714	X	2.3 6.3	F	9 3	U	82998– 12170 12060	82998– – 12580	 L Y	
10715	X	2.3	M	14	U	12160*	–	L	
10716	X	2.3	F	4	U	12170	–	L	
10717	X	2.3	F	4	U	12170	–	L	
10718	X	6.3	F	5	U	12060	12580	Y	
10719	O	TLC	M	10	U	12220	–	L	
10720	O	2.3	F	2	S	12270*	12600	L	
10721	X	2.3	F	10	U	12170	–	L	
10722	X	1.8	M	34	U	12180	–	L	
10723	X	2.3	F	11	U	12170	–	L	
10724	X	2.3	F	12	U	12170	–	L	
10725	X	2.3	F	12	U	12170	–	L	
10726	X	PULSE LOCK	M	30	U	–	–	–	PCB
10727	X	2.3 6.3	F	9 2	U	12170 12060	– 12580	L Y	
10728	X	2.3 6.3	M	5 2	U	– –	– –	– –	PCB
10729	X	2.3 6.3	F	5 2	U	12170 12060	– 12580	L Y	
10730	X	2.3	M	17	U	12160*	–	L	
10731	X	2.3	F	17	U	12170	–	L	
10732	X	TNS	M	14	U	–	–	–	PCB
10733	X	TNS	M	20	U	–	–	–	PCB
10734	X	1.8	F	2	S	12620	–	L	
10735	X	1.8	F	2	S	12620	–	L	
10736	X	1.8	F	2	S	12620	–	L	
10737	O	1.8	F	2	S	12620	–	L	
10738	X	1.8 1.0	M	16 48	U	– –	– –	– –	PCB
10739	X	1.8 1.0	F	10 16	U	12190* 12310*	– –	L L	
10740	X	1.0	F	16	U	12310*	–	L	
10741	X	1.8 1.0	F	6 16	U	12190* 12310*	– –	L L	
10742	X	1.8	M	42	U	–	–	–	PCB
10743	O	1.8	F	12	U	12190*	–	L	
10744	X	2.3	M	16	U	–	–	–	PCB

HOUSING PART NUMBER LIST

Part No. of Connector Body	Supply	Terminal	Male Female	Cav. No.	Sealing Ability	Part No. of Repair Wire		Sleeve Color	Memo
						160 mm Type	500 mm Type		
90980–10745	X	2.3	M	6	U	82998––	82998––	–	PCB
10747	X	8.0	F	3	U	12400	–	Y	
10748	X	2.3	F	2	S	12270*	12600	L	
10749	O	4.8 2.3 II	M	2 2	S	12470 12430*	– –	Y L,Y	
10750	X	TNS	M	26	U	12240	–	L	
10751	X	2.3	M	4	S	12260*	–	L	w/ Clamp
10752	X	1.8	M	30	U	–	–	–	PCB
10753	X	2.3	M	16	U	–	–	–	PCB
10758	X	6.3	M	4	U	12050	–	Y	w/ Clamp
10759	X	6.3 7.7	F	2 2	U	12060 12040	12580 –	Y Y	
10760	X	5.2 6.3	F	1 1	U	– 12060	– 12580	– Y	
10761	X	1.8 1.0	M	16 48	U	– –	– –	– –	PCB
10762	X	2.3	M	5	U	12160*	–	L	
10763	O	1.8 1.0	F	10 16	U	12190* 12310*	– –	L L	
10764	O	1.0	F	16	U	12310*	–	L	
10765	O	1.8 1.0	F	6 16	U	12190* 12310*	– –	L L	
10766	X	6.3 7.7	F	4 2	U	12060 12040	12580 –	Y Y	
10767	X	2.3 II	M	14	U	–	–	–	PCB
10768	X	2.3	M	4	S	12260*	–	L	w/o Clamp
10769	X	2.3	M	8	U	–	–	–	PCB
10770	X	PULSE LOCK	M	24	U	–	–	–	PCB
10771	X	2.3 6.3	M	5 2	U	– –	– –	– –	PCB
10772	X	2.3 6.3	F	5 2	U	12170 12060	– 12580	L Y	
10773	X	1.8 1.0	M	16 48	U	– –	– –	– –	PCB
10774	X	2.3	M	3	S	12260*	–	L	w/ Clamp
10775	X	TODC	M	9	S	–	–	–	
10776	X	TODC	F	9	S	–	–	–	
10777	X	TLC	M	3	S	12280	–	R	w/ Clamp

HOUSING PART NUMBER LIST

Part No. of Connector Body	Supply	Terminal	Male Female	Cav. No.	Sealing Ability	Part No. of Repair Wire		Sleeve Color	Memo
						160 mm Type	500 mm Type		
90980–						82998–	82998–		
		2.3		2	S	12270*	12600	L	
10778	X	2.3	F	15	U	12170	–	L	
		6.3		1		12060	12580	Y	
10779	X	TNS	M	24	U	12240	–	L	
10780	X	1.8	M	16	U	–	–	–	PCB
		1.0		48		–	–	–	
10781	X	MIC	F	11	U	12120	–	L,Y	
10782	X	7.7	F	1	U	12040	–	Y	
10783	X	7.7	F	2	U	12040	–	Y	
10784	X	6.3	F	2	U	12060	12580	Y	
		7.7		1		12040	–	Y	
10785	X	2.3	F	6	U	12170	–	L	
10786	O	6.3	F	1	U	12070	–	Y	
10787	X	2.3	M	3	S	12260*	–	L	w/ Clamp
10788	X	2.3	M	2	S	12260*	–	L	w/ Clamp
10789	O	2.3 II	F	5	U	12340*	–	L,Y	
10790	X	2.3 II	M	5	U	–	–	–	PCB
10791	X	2.3	M	2	U	12160*	–	L	
		6.3		2		12050	–	Y	
10792	O	6.3	F	1	U	12060	12580	Y	
10793	X	2.3 II	M	6	U	–	–	–	PCB
10794	O	2.3 II	M	4	U	12330*	–	L,Y	
10795	O	2.3 II	F	4	U	12340*	–	L,Y	
10796	O	2.3 II	M	6	U	12330*	–	L,Y	
10797	O	2.3 II	F	6	U	12340*	–	L,Y	
10798	O	2.3 II	M	8	U	12330*	–	L,Y	
10799	O	2.3 II	F	8	U	12340*	–	L,Y	
10800	O	2.3 II	M	10	U	12330*	–	L,Y	
10801	O	2.3 II	F	10	U	12340*	–	L,Y	
10802	O	2.3 II	M	12	U	12330*	–	L,Y	
10803	O	2.3 II	F	12	U	12340*	–	L,Y	
10804	O	2.3 II	M	13	U	12330*	–	L,Y	
10805	O	2.3 II	F	13	U	12340*	–	L,Y	
10806	O	2.3 II	M	14	U	12330*	–	L,Y	
10807	O	2.3 II	F	14	U	12340*	–	L,Y	
10808	O	2.3 II	M	16	U	12330*	–	L,Y	
10809	O	2.3 II	F	16	U	12340*	–	L,Y	
10810	O	2.3 II	M	20	U	12330*	–	L,Y	
10811	O	2.3 II	F	20	U	12340*	–	L,Y	

HOUSING PART NUMBER LIST

Part No. of Connector Body	Supply	Terminal	Male Female	Cav. No.	Sealing Ability	Part No. of Repair Wire		Sleeve Color	Memo
						160 mm Type	500 mm Type		
90980–						82998–	82998–		
10812	O	4.8	M	2	U	12370	–	Y	
		2.3 II		12		12330*	–	L,Y	
10813	O	4.8	F	2	U	12380	–	Y	
		2.3 II		12		12340*	–	L,Y	
10814	O	4.8	M	3	U	12370	–	Y	
		2.3 II		12		12330*	–	L,Y	
10815	O	4.8	F	3	U	12380	–	Y	
		2.3 II		12		12340*	–	L,Y	
10816	O	4.8	M	2	U	12370	–	Y	
		2.3 II		18		12330*	–	L,Y	
10817	O	4.8	F	2	U	12380	–	Y	
		2.3 II		18		12340*	–	L,Y	
10818	O	2.3 II	M	18	U	12330*	–	L,Y	
10819	O	2.3 II	F	18	U	12340*	–	L,Y	
10820	O	2.3 II	M	20	U	12330*	–	L,Y	
10821	O	2.3 II	F	20	U	12340*	–	L,Y	
10822	O	2.3 II	F	10	U	12340*	–	L,Y	
10823	O	2.3 II	F	2	U	12340*	–	L,Y	
10824	O	2.3 II	M	2	U	12330*	–	L,Y	
10825	O	2.3 II	F	2	U	12340*	–	L,Y	
10826	X	TLC	M	9	S	12280	–	R	
10827	O	2.3 II	M	15	U	12330*	–	L,Y	
10828	O	2.3 II	F	15	U	12340*	–	L,Y	
10829	O	2.3 II	M	11	U	12330*	–	L,Y	
10830	O	2.3 II	F	11	U	12340*	–	L,Y	
10831	X	2.3	F	4	S	12270*	12600	L	
10833	O	2.3 II	M	2	U	12330*	–	L,Y	w/ Clamp
10834	O	2.3 II	F	3	S	12440*	12590	L,Y	
10835	O	2.3 II	F	2	U	12340*	–	L,Y	
10836	O	8.0	M	1	S	12490	–	Y	
10837	O	8.0	F	1	S	12500	–	Y	
10838	O	8.0	M	2	S	12490	–	Y	
10839	O	8.0	F	2	S	12500	–	Y	
10840	O	4.8	M	3	S	12470	–	Y	
10841	O	4.8	F	3	S	12480	–	Y	
10842	O	2.3 II	M	2	S	12430*	–	L,Y	
10843	O	2.3 II	F	2	S	12440*	12590	L,Y	
10844	O	4.8	F	2	S	12480	–	Y	
		2.3 II		2		12440*	12590	L,Y	

HOUSING PART NUMBER LIST

Part No. of Connector Body	Supply	Terminal	Male Female	Cav. No.	Sealing Ability	Part No. of Repair Wire		Sleeve Color	Memo
						160 mm Type	500 mm Type		
90980–						82998–	82998–		
10845	O	2.3 II	F	3	S	12440*	12590	L,Y	
10846	X	2.3	F	2	S	12270*	12600	L	
10847	X	2.3	F	2	S	12270*	12600	L	
10848	O	2.3 II	F	16	U	12340*	–	L,Y	
10849	X	2.3 II	M	2	U	12330*	–	L,Y	
10850	O	2.3 II	F	2	U	12340*	–	L,Y	
10851	X	2.3 II	M	14	U	–	–	–	PCB
10852	O	2.3 II	F	14	U	12340*	–	L,Y	
10853	X	2.3 II	F	2	S	12440*	12590	L,Y	
10854	O	2.3 II	F	6	S	12440*	12590	L,Y	
10855	O	2.3 II	F	2	U	12340*	–	L,Y	
10856	O	2.3 II 8.0	M	18 1	U	12330* 12390	– –	L,Y Y	
10857	O	2.3 II 8.0	F	18 1	U	12340* 12400	– –	L,Y Y	
10858	O	2.3 II	M	4	U	12330*	–	L,Y	
10859	O	2.3 II	M	2	U	12330*	–	L,Y	
10860	O	2.3 II	F	2	U	12340*	–	L,Y	
10861	O	4.8	M	10	U	12370	–	Y	
10862	O	4.8	F	10	U	12380	–	Y	
10863	X	2.3 II	M	18	U	–	–	–	PCB
10864	O	2.3 II	M	12	U	–	–	–	PCB
10865	X	2.3 II	M	10	U	–	–	–	PCB
10866	O	8.0	M	4	U	12390	–	Y	
10867	O	8.0	F	4	U	12400	–	Y	
10868	O	2.3 II	M	4	S	12430*	–	L,Y	
10869	O	2.3 II	F	4	S	12440*	12590	L,Y	
10870	O	2.3 II	M	1	U	12330*	–	L,Y	w/o Clamp
10871	O	2.3 II	F	1	U	12340*	–	L,Y	
10872	O	4.8 2.3 II	M	7 4	U	12370 12330*	– –	Y L,Y	
10873	O	4.8 2.3 II	F	7 4	U	12380 12340*	– –	Y L,Y	
10874	O	2.3 II	M	16	U	–	–	–	PCB
10875	O	2.3 II	F	22	U	12340*	–	L,Y	
10876	O	4.8 2.3 II	M	3 5	U	12370 12330*	– –	Y L,Y	
10877	O	4.8 2.3 II	F	3 5	U	12380 12340*	– –	Y L,Y	

HOUSING PART NUMBER LIST

Part No. of Connector Body	Supply	Terminal	Male Female	Cav. No.	Sealing Ability	Part No. of Repair Wire		Sleeve Color	Memo
						160 mm Type	500 mm Type		
90980–						82998–	82998–		
10878	O	4.8	M	2	U	12370	–	Y	
		2.3 II		10		12330*	–	L,Y	
10879	O	4.8	F	2	U	12380	–	Y	
		2.3 II		10		12340*	–	L,Y	
10880	O	4.8	M	4	U	12370	–	Y	
		2.3 II		20		12330*	–	L,Y	
10881	O	4.8	F	4	U	12380	–	Y	
		2.3 II		20		12340*	–	L,Y	
10882	O	4.8	M	1	U	12370	–	Y	
		2.3 II		18		12330*	–	L,Y	
10883	O	4.8	F	1	U	12380	–	Y	
		2.3 II		18		12340*	–	L,Y	
10884	O	4.8	M	4	U	12370	–	Y	
		2.3 II		12		12330*	–	L,Y	
10885	O	4.8	F	4	U	12380	–	Y	
		2.3 II		12		12340*	–	L,Y	
10886	O	2.3 II	M	2	S	12430*	–	L,Y	
10887	O	2.3 II	F	2	S	12440*	12590	L,Y	
10888	O	4.8	F	2	U	12380	–	Y	
		8.0		3		12400	–	Y	
10889	O	4.8	F	4	U	12380	–	Y	
		8.0		2		12400	–	Y	
10890	O	2.3 II	M	8	S	12430*	–	L,Y	
10891	O	2.3 II	F	8	S	12440*	12590	L,Y	
10892	O	2.3 II	M	1	S	12430*	–	L,Y	
10893	O	2.3 II	F	1	S	12440*	12590	L,Y	
10894	O	4.8	M	2	S	12470	–	Y	
		2.3 II		6		12430*	–	L,Y	
10895	O	4.8	F	2	S	12480	–	Y	
		2.3 II		6		12440*	12590	L,Y	
10896	O	2.3 II	M	8	S	12430*	–	L,Y	
10897	O	2.3 II	F	8	S	12440*	12590	L,Y	
10898	O	2.3 II	M	2	S	12430*	–	L,Y	
10899	O	2.3 II	F	2	S	12440*	12590	L,Y	
10900	O	2.3 II	M	2	S	12430*	–	L,Y	
10901	O	2.3 II	F	2	S	12440*	12590	L,Y	
10902	O	2.3 II	F	3	S	12440*	12590	L,Y	
10903	O	8.0	F	2	U	12400	–	Y	
10904	O	2.3 II	F	4	U	12340*	–	L,Y	

HOUSING PART NUMBER LIST

Part No. of Connector Body	Supply	Terminal	Male Female	Cav. No.	Sealing Ability	Part No. of Repair Wire		Sleeve Color	Memo
						160 mm Type	500 mm Type		
90980–						82998–	82998–		
10905	O	2.3 II	M	2	U	12330*	–	L,Y	
10906	O	2.3 II	F	2	U	12340*	–	L,Y	
10907	O	2.3 II	M	3	U	12330*	–	L,Y	
10908	O	2.3 II	F	3	U	12340*	–	L,Y	
10909	O	2.3 II 8.0	M	4 2	U	12330* 12390	– –	L,Y Y	
10910	O	2.3 II 8.0	F	4 2	U	12340* 12400	– –	L,Y Y	
10911	O	4.8	F	1	U	12380	–	Y	
10912	O	4.8	F	1	U	12380	–	Y	
10913	X	6.3	F	1	U	12060	12580	Y	
10914	X	6.3	F	1	U	12060	12580	Y	
10915	O	4.8	M	2	U	12370	–	Y	
10916	O	4.8	F	2	U	12380	–	Y	
10917	X	1.8 1.0	M	8 18	U	– –	– –	– –	PCB
10918	X	1.8 1.0	F	8 18	U	12190* 12310*	– –	L L	
10919	O	2.3 II	F	3	S	12440*	12590	L,Y	
10920	O	1.3 2.3 II	M	19 4	U	12410 12330*	– –	L L,Y	
10921	O	1.3 2.3 II	F	19 4	U	12420 12340*	– –	L L,Y	
10923	O	2.3 II	F	2	S	12440*	12590	L,Y	
10924	X	1.8 1.0	M	16 10	U	– –	– –	– –	PCB
10925	O	1.8 1.0	F	10 16	U	12190* 12310*	– –	L L	
10926	O	4.8	F	8	U	12380	–	Y	
10927	O	4.8	M	2	S	12470	–	Y	
10928	O	4.8	F	2	S	12480	–	Y	
10929	X	1.8	F	4	S	12620	–	L	
10930	O	2.3 II	M	7	S	12430*	–	L,Y	
10931	O	2.3 II	F	7	S	12440*	12590	L,Y	
10932	O	4.8 2.3 II	F	2 10	U	12380 12340*	– –	Y L,Y	
10933	O	2.3 II	F	6	U	12340*	–	L,Y	
10934	O	2.3 II	M	2	U	12330*	–	L,Y	
10935	O	2.3 II	F	2	U	12340*	–	L,Y	

HOUSING PART NUMBER LIST

Part No. of Connector Body	Supply	Terminal	Male Female	Cav. No.	Sealing Ability	Part No. of Repair Wire		Sleeve Color	Memo
						160 mm Type	500 mm Type		
90980–						82998–	82998–		
10936	X	2.3 II	M	20	U	–	–	–	PCB
10937	X	2.3 II	M	18	U	–	–	–	PCB
10938	X	2.3 II	M	12	U	–	–	–	PCB
10939	O	4.8 2.3 II	F	2 4	S	12480 12440*	– 12590	Y L,Y	
10940	O	4.8 2.3 II	F	2 2	S	12480 12440*	– 12590	Y L,Y	
10941	O	2.3 II	M	4	S	12430*	–	L,Y	
10942	O	2.3 II	F	4	S	12440*	12590	L,Y	
10943	O	2.3 II	F	4	S	12440*	12590	L,Y	
10944	O	4.8	M	3	S	12470	–	Y	
10945	O	4.8 2.3 II	M	2 3	S	12470 12430*	– –	Y L,Y	
10946	O	4.8 2.3 II	F	2 3	S	12480 12440*	– 12590	Y L,Y	
10947	O	2.3 II	F	2	S	12440*	12590	L,Y	
10948	O	2.3 II	M	2	S	12430*	–	L,Y	
10949	O	2.3 II	F	2	S	12440*	12590	L,Y	
10950	X	2.3 II	F	88	U	12340*	–	L,Y	
10951	X	2.3 II	M	52	U	12330*	–	L,Y	
10952	X	4.8 8.0	F	12 8	U	12380 12400	– –	Y Y	
10953	X	4.8 8.0	F	18 4	U	12380 12400	– –	Y Y	
10954	X	4.8 8.0	M	18 6	U	12370 12390	– –	Y Y	
10955	X	4.8 8.0	F	18 6	U	12380 12400	– –	Y Y	
10956	O	8.0	F	3	U	12400	–	Y	
10957	O	2.3 II	F	6	U	12340*	–	L,Y	
10958	O	8.0	M	2	U	12390	–	Y	
10959	O	2.3 II	M	2	S	12430*	–	L,Y	
10960	X	MIR-ROR	F	2	U	–	–	–	
10961	X	2.3 II	M	10	U	–	–	–	PCB
10962	O	2.3 II	F	2	U	12340*	–	L,Y	
10963	O	4.8	M	8	U	12370	–	Y	
10964	O	2.3 II	F	6	U	12340*	–	L,Y	
10965	O	2.3 II	F	10	U	12340*	–	L,Y	

HOUSING PART NUMBER LIST

Part No. of Connector Body	Supply	Terminal	Male Female	Cav. No.	Sealing Ability	Part No. of Repair Wire		Sleeve Color	Memo
						160 mm Type	500 mm Type		
90980–						82998–	82998–		
10966	O	2.3 II	F	11	U	12340*	–	L,Y	
10967	O	2.3 II	F	12	U	12340*	–	L,Y	
10968	O	2.3 II	F	12	U	12340*	–	L,Y	
10969	X	1.8 1.0	M	10 32	U	– –	– –	– –	PCB
10970	X	7.7	M	2	S	–	–	–	
10971	X	2.3 II	M	14	U	–	–	–	PCB
10972	X	1.8 1.0	M	22 32	U	– –	– –	– –	PCB
10973	O	1.8	F	12	U	12190*	–	L	
10974	O	2.3 II	F	2	S	12440*	12590	L,Y	
10975	O	4.8	M	6	U	12370	–	Y	
10976	O	4.8	F	6	U	12380	–	Y	
10977	O	2.3 II	M	22	U	12330*	–	L,Y	
10978	O	1.8 1.0	M	16 10	U	– –	– –	– –	PCB
10979	X	4.8	M	3	U	12370	–	Y	
10980	O	4.8	F	3	U	12380	–	Y	
10981	O	2.3 II	F	3	S	12440*	12590	L,Y	
10982	O	4.8	M	1	S	12470	–	Y	
10983	O	4.8	F	1	S	12480	–	Y	
10984	X	2.3	M	6	S	12260*	–	L	w/o Clamp
10985	O	4.8 2.3 II	M	1 4	U	12370 12330*	– –	Y L,Y	
10986	O	4.8 2.3 II	F	1 4	U	12380 12340*	– –	Y L,Y	
10987	O	2.3 II	M	6	S	12430*	–	L,Y	
10988	O	2.3 II	F	6	S	12440*	12590	L,Y	
10989	O	4.8	M	4	S	12470	–	Y	
10990	O	4.8	F	4	S	12480	–	Y	
10991	X	1.8 1.0	M	18 16	U	– –	– –	– –	PCB
10992	X	4.8 2.3 II	M	4 6	U	– –	– –	– –	PCB
10993	O	4.8 2.3 II	F	4 6	U	12380 12340*	– –	Y L,Y	
10994	O	8.0	M	1	U	12390	–	Y	
10995	O	8.0	F	1	U	12400	–	Y	
10996	O	2.3 II	F	6	U	12340*	–	L,Y	

HOUSING PART NUMBER LIST

Part No. of Connector Body	Supply	Terminal	Male Female	Cav. No.	Sealing Ability	Part No. of Repair Wire		Sleeve Color	Memo
						160 mm Type	500 mm Type		
90980– 10997	O	2.3 II	F	10	U	82998– 12340*	82998– –	L,Y	
10998	O	2.3 II	M	6	U	12330*	–	L,Y	
11001	O	2.3 II	F	6	U	12340*	–	L,Y	
11002	O	2.3 II	M	2	S	12430*	–	L,Y	
11003	O	2.3 II	F	2	S	12440*	12590	L,Y	
11004	O	2.3 II	M	2	S	12430*	–	L,Y	
11005	O	2.3 II	F	2	S	12440*	12590	L,Y	
11006	O	2.3 II	M	1	S	12430*	–	L,Y	
11007	O	2.3 II	F	1	S	12440*	12590	L,Y	
11008	O	2.3 II	M	2	S	12430*	–	L,Y	
11009	O	2.3 II	F	2	S	12440*	12590	L,Y	
11010	O	2.3 II	M	6	U	12330*	–	L,Y	
11011	O	2.3 II	F	6	U	12340*	–	L,Y	
11012	O	2.3 II	M	4	U	12330*	–	L,Y	
11013	O	2.3 II	F	4	U	12340*	–	L,Y	
11014	X	6.3	M	2	U	12050	–	Y	
11015	O	2.3 II	M	3	S	12430*	–	L,Y	
11016	O	2.3 II	F	3	S	12440*	12590	L,Y	
11017	X	1.8	M	18	U	–	–	–	PCB
11018	X	1.8	M	42	U	–	–	–	PCB
11019	O	2.3 II	F	2	S	12440*	12590	L,Y	
11020	O	2.3 II	F	3	S	12440*	12590	L,Y	
11021	O	4.8 2.3 II	M	2 3	S	12470 12430*	– –	Y L,Y	
11022	O	4.8 2.3 II	F	2 3	S	12480 12440*	– 12590	Y L,Y	
11023	O	2.3 II	M	4	U	12330*	–	L,Y	
11024	O	2.3 II	F	5	S	12440*	12590	L,Y	
11025	O	2.3 II	F	2	S	12440*	12590	L,Y	
11026	O	2.3 II	M	1	U	12330*	–	L,Y	w/ Clamp
11027	O	2.3 II	M	4	S	12430*	–	L,Y	
11028	O	2.3 II	F	4	S	12440*	12590	L,Y	
11029	O	2.3 II	M	2	S	12430*	–	L,Y	
11030	O	2.3 II	F	2	S	12440*	12590	L,Y	
11031	O	8.0	M	2	S	12490	–	Y	
11032	O	8.0	F	2	S	12500	–	Y	
11033	O	2.3 II	M	6	S	12430*	–	L,Y	
11034	O	2.3 II	F	6	S	12440*	12590	L,Y	
11035	O	4.8	M	4	S	12470	–	Y	

HOUSING PART NUMBER LIST

Part No. of Connector Body	Supply	Terminal	Male Female	Cav. No.	Sealing Ability	Part No. of Repair Wire		Sleeve Color	Memo
						160 mm Type	500 mm Type		
90980– 11036	O	4.8	F	4	S	82998– 12480	82998– –	Y	
11037	O	2.3 II	F	4	S	12440*	12590	L,Y	
11038	O	2.3 II	F	2	S	12440*	12590	L,Y	
11039	X	1.8 1.0	M	16 18	U	– –	– –	– –	PCB
11040	X	1.3 2.3 II	M	47 4	U	– –	– –	– –	PCB
11041	O	1.3	F	11	U	12420	–	L	
11042	O	1.3 2.3 II	F	11 4	U	12420 12340*	– –	L L,Y	
11043	O	1.3	F	25	U	12420	–	L	
11044	O	4.8 8.0	M	2 1	S	12470 12490	– –	Y Y	
11045	O	4.8 8.0	F	2 1	S	12480 12500	– –	Y Y	
11046	X	2.3 II	M	17	U	12330*	–	L,Y	
11049	O	2.3 II	F	5	S	12440*	12590	L,Y	
11050	O	2.3 II	M	2	S	12430*	–	L,Y	
11051	O	2.3 II	F	2	S	12440*	12590	L,Y	
11052	O	1.3	M	3	U	12410	–	L	
11053	O	1.3	F	3	U	12420	–	L	
11054	X	1.3 2.3 II	M	55 8	U	– –	– –	– –	PCB
11055	O	1.3	F	25	U	12420	–	L	
11056	O	1.3 2.3 II	F	11 4	U	12420 12340*	– –	L L,Y	
11057	X	1.3 2.3 II	M	21 4	U	– –	– –	– –	PCB
11058	O	1.3 2.3 II	F	21 4	U	12420 12340*	– –	L L,Y	
11059	X	1.8 1.0	M	18 16	U	– –	– –	– –	PCB
11060	O	2.3 II	M	2	U	12330*	–	L,Y	
11061	X	1.8	F	2	S	12620	–	L	
11062	O	1.8	F	2	S	12620	–	L	
11063	O	1.3	M	4	S	12630	–	L	Outer
11064	O	1.3	M	4	S	12630	–	L	Inner
11065	O	1.3	F	4	S	12650	–	L	Outer
11066	O	1.3	F	4	S	12650	–	L	Inner

HOUSING PART NUMBER LIST

Part No. of Connector Body	Supply	Terminal	Male Female	Cav. No.	Sealing Ability	Part No. of Repair Wire		Sleeve Color	Memo
						160 mm Type	500 mm Type		
90980–11067	X	2.3 II	M	6	U	82998– –	82998– –	–	PCB
11068	O	2.3 II	F	2	S	12440*	12590	L,Y	
11069	O	2.3 II	M	2	S	12430*	–	L,Y	
11070	O	2.3 II	F	2	S	12440*	12590	L,Y	
11071	O	2.3 II	F	3	U	12340*	–	L,Y	
11072	O	2.3 II	M	2	S	12430*	–	L,Y	
11073	O	2.3 II	M	2	S	12430*	–	L,Y	w/o Clamp
11074	O	2.3 II	M	2	S	12430*	–	L,Y	w/ Clamp
11075	O	2.3 II	F	2	S	12440*	12590	L,Y	
11076	X	TNS	M	4	S	–	–	–	w/ Clamp
11077	O	2.3 II	F	5	S	12440*	12590	L,Y	
11078	O	2.3 II	M	5	S	12430*	–	L,Y	
11079	O	2.3 II	F	3	U	12340*	–	L,Y	
11080	O	2.3 II	F	2	U	12340*	–	L,Y	
11081	X	1.8 1.0	M	10 32	U	– –	– –	– –	PCB
11082	X	1.0	F	16	U	12310*	–	L	
11083	O	1.3	F	11	U	12420	–	L	
11084	X	1.3 2.3 II	M	30 4	U	– –	– –	– –	PCB
11085	O	2.3 II	M	5	U	12330*	–	L,Y	
11086	O	2.3 II	M	12	S	12430*	–	L,Y	
11087	O	2.3 II	F	12	S	12440*	12590	L,Y	
11088	O	1.3	M	15	S	12630	–	L	
11089	O	1.3	F	15	S	12650	–	L	
11090	O	2.3 II	F	4	U	12340*	–	L,Y	
11091	O	4.8	F	6	U	12380	–	Y	
11092	O	4.8	F	8	U	12380	–	Y	
11093	O	4.8	M	2	U	12370	–	Y	
11094	O	4.8	F	2	U	12380	–	Y	
11095	O	HEAD-LAMP	F	2	S	24150	24190	L,Y	
11096	O	HEAD-LAMP	F	2	S	24150	24190	L,Y	
11097	O	2.3 II	M	1	U	12330*	–	L,Y	w/ Clamp
11098	O	2.3 II	F	2	U	12340*	–	L,Y	
11099	O	2.3 II	M	6	U	12330*	–	L,Y	
11100	O	2.3 II	M	4	U	12330*	–	L,Y	
11101	O	2.3 II	M	6	U	12330*	–	L,Y	
11102	O	2.3 II	M	10	U	12330*	–	L,Y	

HOUSING PART NUMBER LIST

Part No. of Connector Body	Supply	Terminal	Male Female	Cav. No.	Sealing Ability	Part No. of Repair Wire		Sleeve Color	Memo
						160 mm Type	500 mm Type		
90980– 11103	X	1.8 1.0	M	8 18	U	82998– –	82998– –	– –	PCB
11104	X	2.3 II	M	20	U	–	–	–	PCB
11105	X	2.3 II	M	12	U	–	–	–	PCB
11106	X	1.3	M	4	U	–	–	–	PCB
11107	O	1.3	F	4	U	12420	–	L	
11108	X	HEAD-LAMP	F	3	S	24150	24190	L,Y	
11110	O	2.3 II	M	6	U	12330*	–	L,Y	
11111	O	–	–	–	–	–	–	–	
11113	O	SFPC	F	16	U	24180	–	L	
11114	O	SFPC	F	13	U	24180	–	L	
11115	O	SFPC	F	13	U	24180	–	L	
11116	O	SFPC	F	10	U	24180	–	L	
11117	X	2.3 II	M	20	U	–	–	–	PCB
11118	O	4.8 2.3 II	F	2 2	U	12380 12340*	– –	Y L,Y	
11119	X	1.3	M	21	U	–	–	–	PCB
11120	X	1.3 2.3 II	M	19 4	U	– –	– –	– –	PCB
11121	O	2.3 II	F	12	U	12340*	–	L,Y	
11122	O	2.3 II	M	4	S	12430*	–	L,Y	
11123	X	2.3 II	M	8	U	–	–	–	PCB
11124	X	1.8	M	30	U	–	–	–	PCB
11125	O	1.3	F	21	U	12420	–	L	
11126	O	4.8 2.3 II	M	2 2	U	12370 12330*	– –	Y L,Y	
11127	O	2.3 II	M	18	U	–	–	–	PCB
11128	X	1.8 1.0	M	16 60	U	– –	– –	– –	PCB
11129	O	1.0	F	12	U	12310*	–	L	
11130	O	4.8 2.3 II	F	2 6	U	12380 12340*	– –	Y L,Y	
11131	O	2.3 II	M	3	S	12430*	–	L,Y	
11132	O	2.3 II	F	3	S	12440*	12590	L,Y	
11133	O	1.3	M	25	U	12410	–	L	
11134	O	2.3 II	M	8	U	–	–	–	PCB
11135	O	4.8	M	4	U	12370	–	Y	
11136	O	4.8	F	4	U	12380	–	Y	

HOUSING PART NUMBER LIST

Part No. of Connector Body	Supply	Terminal	Male Female	Cav. No.	Sealing Ability	Part No. of Repair Wire		Sleeve Color	Memo
						160 mm Type	500 mm Type		
90980–11137	O	2.3 II	M	2	S	82998–12430*	82998– –	L,Y	
11138	O	4.8 8.0	M	2 2	S	12470 12490	– –	Y Y	
11139	O	4.8 8.0	F	2 2	S	12480 12500	– –	Y Y	
11140	O	2.3 II	F	2	S	12440*	12590	L,Y	
11141	O	2.3 II	M	2	S	12430*	–	L,Y	
11142	O	2.3 II	F	2	S	12440*	12590	L,Y	
11143	O	2.3 II	F	3	S	12440*	12590	L,Y	
11144	O	2.3 II	F	6	S	12440*	12590	L,Y	
11145	O	2.3 II	F	3	S	12440*	12590	L,Y	
11146	O	2.3 II	M	1	U	12330*	–	L,Y	
11147	O	2.3 II	F	1	U	12340*	–	L,Y	
11148	O	2.3 II	F	2	U	12340*	–	L,Y	
11149	O	2.3 II	F	2	S	12440*	12590	L,Y	
11150	O	2.3 II	F	4	S	12440*	12590	L,Y	
11151	O	2.3 II	F	12	S	12440*	12590	L,Y	
11152	O	2.3 II	F	4	S	12440*	12590	L,Y	
11153	O	2.3 II	F	2	S	–	12790*	L,Y	
11154	O	2.3 II	F	2	S	–	12790*	L,Y	
11155	O	2.3 II	M	2	S	12430*	–	L,Y	
11156	O	2.3 II	F	2	S	12440*	12590	L,Y	
11157	X	2.3 II	F	3	S	12440*	12590	L,Y	
11158	O	1.3 2.3 II	M	21 4	U	12410 12330*	– –	L L,Y	
11159	O	2.3 II	M	2	U	12330*	–	L,Y	
11160	O	4.8 2.3 II	M	1 2	S	12470 12430*	– –	Y L,Y	
11161	O	4.8 2.3 II	F	1 2	S	12480 12440*	– 12590	Y L,Y	
11162	O	2.3 II	F	2	S	12440*	12590	L,Y	
11163	O	2.3 II	F	2	S	12440*	12590	L,Y	
11164	X	1.3	M	7	U	–	–	–	PCB
11165	O	1.3	F	7	U	12420	–	L	
11166	O	2.3 II	F	1	S	12440*	12590	L,Y	
11167	O	2.3 II	M	16	U	12330*	–	L,Y	
11168	O	2.3 II	M	2	S	12430*	–	L,Y	
11169	O	1.3	M	3	S	12630	–	L	
11170	O	1.3	F	3	S	12650	–	L	

HOUSING PART NUMBER LIST

Part No. of Connector Body	Supply	Terminal	Male Female	Cav. No.	Sealing Ability	Part No. of Repair Wire		Sleeve Color	Memo
						160 mm Type	500 mm Type		
90980–						82998–	82998–		
11171	O	1.3	M	7	S	12630	–	L	
11172	O	1.3	F	7	S	12650	–	L	
11173	O	1.3	M	11	S	12630	–	L	
11174	O	1.3	F	11	S	12650	–	L	
11175	O	2.3 II	M	2	S	12430*	–	L,Y	
11176	O	2.3 II	F	2	S	12440*	12590	L,Y	
11177	O	2.3 II	M	4	S	12430*	–	L,Y	
11178	O	2.3 II	F	4	S	12440*	12590	L,Y	
11179	O	1.3	F	15	U	12420	–	L	
11180	X	1.3	M	15	U	–	–	–	PCB
11181	O	1.3	M	5	S	12630	–	L	
11182	O	1.3	F	5	S	12650	–	L	
11183	O	8.0	M	1	S	12490	–	Y	
11184	O	8.0	F	1	S	12500	–	Y	
11186	O	1.3	M	4	U	12410	–	L	
11187	O	1.3	F	4	U	12420	–	L	
11188	O	1.3	M	2	S	12630	–	L	
11189	O	1.3	F	2	S	12650	–	L	
11190	O	2.3 II	F	8	S	12440*	12590	L,Y	
11191	O	1.3	M	9	S	12630	–	L	
11192	O	1.3	F	9	S	12650	–	L	
11193	O	2.3 II	M	6	S	12430*	–	L,Y	
11194	O	2.3 II	F	6	S	12440*	12590	L,Y	
11195	O	2.3 II	F	22	S	12440*	12590	L,Y	
		2.3 II		22	U	12340*	–	L,Y	
		6.3 II		1	S	24160	–	L	
11196	O	2.3 II	M	6	S	12430*	–	L,Y	
11197	O	2.3 II	F	6	S	12440*	12590	L,Y	
11198	X	1.3	M	13	U	–	–	–	PCB
11199	X	1.3	F	13	U	12420	–	L	
11200	X	1.3	M	11	U	12410	–	L	
11201	X	1.3	M	15	U	12410	–	L	
11202	X	1.3	M	17	U	12410	–	L	
11203	X	1.3	F	17	U	12420	–	L	
11204	X	1.3	M	15	U	12410	–	L	
		2.3 II		4		12330*	–	L,Y	
11205	X	1.3	F	15	U	12420	–	L	
		2.3 II		4		12340*	–	L,Y	
11206	X	1.3	M	21	U	12410	–	L	

HOUSING PART NUMBER LIST

Part No. of Connector Body	Supply	Terminal	Male Female	Cav. No.	Sealing Ability	Part No. of Repair Wire		Sleeve Color	Memo
						160 mm Type	500 mm Type		
90980– 11207	O	2.3 II	F	2	S	82998– 12440*	82998– 12590	L,Y	
11208	O	1.3 2.3 II	M	19 4	U	12410 12330*	– –	L L,Y	
11211	O	1.3	M	2	U	12410	–	L	
11212	O	1.3	F	2	U	12420	–	L	
11213	X	1.0	M	120	S	–	–	–	PCB
11214	O	1.0	F	80	S	–	–	–	
11215	O	1.0	F	40	S	–	–	–	
11216	O	–	–	–	–	–	–	–	
11217	X	1.0 II	M	100	U	–	–	–	PCB
11218	O	1.0 II	F	28	U	24020*	–	L	
11219	O	1.0 II	F	16	U	24020*	–	L	
11220	O	1.0 II	F	22	U	24020*	–	L	
11221	O	1.0 II	F	34	U	24020*	–	L	
11222	O	1.0 II 1.8 II 1.8 II	M	18 14 14	U	24010 24030 24090	– – –	L L,Y L,Y	
11223	O	1.0 II 1.8 II 1.8 II	M	12 6 6	U	24010 24030 24090	– – –	L L,Y L,Y	
11224	O	1.0 II 1.8 II 1.8 II	F	12 6 6	U	24020* 24040 24100*	– – –	L L,Y L,Y	
11225	O	1.0 II 1.8 II 1.8 II	F	6 8 8	U	24020* 24040 24100*	– – –	L L,Y L,Y	
11226	O	1.0 II 1.8 II 1.8 II	F	12 6 6	U	24020* 24040 24100*	– – –	L L,Y L,Y	
11227	O	2.3 II	F	2	U	12340*	–	L,Y	
11228	O	1.8 1.0	M	18 16	U	– –	– –	– –	PCB
11229	X	2.3 II	M	3	U	–	–	–	PCB
11230	X	2.3 II	M	5	U	–	–	–	PCB
11231	O	2.3 II	F	10	S	12440*	12590	L,Y	
11232	O	2.3 II	F	5	S	12440*	12590	L,Y	
11233	X	1.8 1.0	M	4 22	U	– –	– –	– –	PCB

HOUSING PART NUMBER LIST

Part No. of Connector Body	Supply	Terminal	Male Female	Cav. No.	Sealing Ability	Part No. of Repair Wire		Sleeve Color	Memo
						160 mm Type	500 mm Type		
90980– 11234	X	1.8 1.0	F	4 22	U	82998– 12190* 12310*	82998– – –	L L	
11235	O	2.3 II	F	2	S	12440*	12590	L,Y	
11236	X	4.8	M	2	S	12470	–	Y	
11237	O	4.8	F	2	S	12480	–	Y	
11238	X	2.3 II	F	22	U	12340*	–	L,Y	
11239	O	4.8 2.3 II	M	3 8	S	12470 12430*	– –	Y L,Y	
11240	O	4.8 2.3 II	F	3 8	S	12480 12440*	– 12590	Y L,Y	
11241	O	2.3 II 8.0	M	6 2	S	12430* 12490	– –	L,Y Y	
11242	O	2.3 II 8.0	F	6 2	S	12440* 12500	12590 –	L,Y Y	
11243	O	2.3 II	F	1	S	12440*	12590	L,Y	
11244	O	2.3 II	M	3	S	12430*	–	L,Y	w/ Clamp
11245	O	2.3 II	F	3	S	12440*	12590	L,Y	
11246	O	2.3 II	F	2	S	12440*	12590	L,Y	
11247	O	2.3 II	M	2	S	12430*	–	L,Y	
11248	O	2.3 II	F	2	S	12440*	12590	L,Y	
11249	X	2.3 II	M	2	S	12430*	–	L,Y	
11250	O	2.3 II	F	2	S	12440*	12590	L,Y	
11251	X	2.3 II	F	3	U	12340*	–	L,Y	
11252	O	2.3 II	F	1	S	12440*	12590	L,Y	
11253	X	1.0 III 1.0 III	M	5 52	U	– –	– –	– –	PCB
11254	X	2.3 II	M	2	S	12430*	–	L,Y	
11255	O	2.3 II	F	2	S	12440*	12590	L,Y	
11256	X	1.3	M	11	S	12630	–	L	
11257	X	1.3	F	11	S	12650	–	L	
11258	O	4.8	M	1	U	12370	–	Y	
11259	O	4.8	F	1	U	12380	–	Y	
11260	X	2.3 II	F	20	U	12340*	–	L,Y	
11261	O	2.3 II	F	3	S	12440*	12590	L,Y	
11262	X	1.3	M	4	S	12630	–	L	Outer
11263	X	1.3	M	15	U	–	–	–	PCB
11264	O	1.3	F	15	U	12420	–	L	
11265	X	2.3 II	M	14	U	–	–	–	PCB

HOUSING PART NUMBER LIST

Part No. of Connector Body	Supply	Terminal	Male Female	Cav. No.	Sealing Ability	Part No. of Repair Wire		Sleeve Color	Memo
						160 mm Type	500 mm Type		
90980– 11266	X	1.8 1.0	M	10 32	U	82998– – –	82998– – –	– –	PCB
11267	X	4.8 2.3 II	M	2 4	S	12470 12430*	– –	Y L,Y	
11268	X	2.3 II	M	4	S	12430*	–	L,Y	
11269	X	2.3 II	F	4	S	12440*	12590	L,Y	
11270	O	2.3 II	M	1	S	12430*	–	L,Y	
11271	O	2.3 II	F	1	S	12440*	12590	L,Y	
11272	O	2.3 II	M	2	S	12430*	–	L,Y	
11273	O	2.3 II	F	2	S	12440*	12590	L,Y	
11274	O	–	–	–	–	–	–	–	
11276	X	4.8	F	10	U	12380	–	Y	
11277	X	4.8 2.3 II	F	1 8	U	12380 12340*	– –	Y L,Y	
11278	O	2.3 II	F	2	U	12340*	–	L,Y	
11279	O	4.8 2.3 II	F	2 6	U	12380 12340*	– –	Y L,Y	
11280	O	2.3 II	F	6	U	12340*	–	L,Y	
11281	X	1.0 III 1.0 IV	M	98 24	U	– –	– –	– –	PCB
11282	X	2.3 II	F	1	S	12440*	12590	L,Y	
11283	X	4.8 2.3 II	F	2 2	S	12480 12440*	– 12590	Y L,Y	
11284	O	2.3 II	F	2	S	–	12790*	L,Y	
11285	O	2.3 II	F	2	S	–	12790*	L,Y	
11286	X	2.3 II	F	2	S	12440*	12590	L,Y	
11287	X	2.3 II 8.0	M	2 2	S	12430* 12490	– –	L,Y Y	
11288	X	2.3 II 8.0	F	2 2	S	12440* 12500	12590 –	L,Y Y	
11289	O	2.3 II	M	6	S	12430*	–	L,Y	
11290	O	2.3 II	F	6	S	12440*	12590	L,Y	
11291	O	2.3 II	M	4	S	12430*	–	L,Y	
11292	O	2.3 II	F	4	S	12440*	12590	L,Y	
11293	X	2.3 II	M	3	S	12430*	–	L,Y	
11294	O	2.3 II	F	3	S	12440*	12590	L,Y	
11295	O	2.3 II	M	3	S	12430*	–	L,Y	w/ Clamp
11296	X	2.3 II	F	3	U	12340*	–	L,Y	
11297	X	4.8	F	6	U	12380	–	Y	

HOUSING PART NUMBER LIST

Part No. of Connector Body	Supply	Terminal	Male Female	Cav. No.	Sealing Ability	Part No. of Repair Wire		Sleeve Color	Memo
						160 mm Type	500 mm Type		
90980–11298	X	2.3 II	M	3	U	82998–12330*	82998– –	L,Y	
11299	O	2.3 II	M	2	U	12330*	–	L,Y	w/ Clamp
11300	O	2.3 II	M	2	U	12330*	–	L,Y	
11301	X	2.3 II	M	4	U	12330*	–	L,Y	
11302	X	4.8	F	9	U	12380	–	Y	
11303	X	2.3 II	M	2	S	12430*	–	L,Y	
11304	O	4.8 2.3 II	F	2 2	S	12480 12440*	– 12590	Y L,Y	
11305	X	1.3	M	2	U	12410	–	L	
11306	X	1.3	F	2	U	12420	–	L	
11307	X	1.3 2.3 II	M	15 4	U	12410 12330*	– –	L L,Y	
11308	X	1.3 2.3 II	F	15 4	U	12420 12340*	– –	L L,Y	
11309	X	1.3 2.3 II	M	13 4	U	12410 12330*	– –	L L,Y	
11310	X	1.3 2.3 II	F	13 4	U	12420 12340*	– –	L L,Y	
11311	O	2.3 II	F	12	U	12340*	–	L,Y	
11312	X	2.3 II	M	14	U	–	–	–	PCB
11313	X	2.3 II	F	4	U	12340*	–	L,Y	
11314	O	HEAD-LAMP	F	3	U	24140	24200	L,Y	
11315	X	2.3 II	F	1	U	12340*	–	L,Y	
11316	X	2.3 II 6.3 II	M	20 1	U	12330* –	– –	L,Y –	
11317	O	2.3 II	F	5	S	12440*	12590	L,Y	
11318	X	1.3	M	5	U	–	–	–	PCB
11319	O	1.3	F	5	U	12420	–	L	
11320	X	1.3	M	8	U	–	–	–	PCB
11321	X	1.3	F	8	U	12420	–	L	
11322	X	2.3 II	M	2	S	12430*	–	L,Y	
11323	O	2.3 II 2.3 II 6.3 II	F	22 22 1	S U S	12440* 12340* 24160	12590 – –	L,Y L,Y L	
11324	X	2.3 II	M	16	U	–	–	–	PCB
11325	X	2.3 II	M	10	U	–	–	–	PCB
11326	X	2.3 II	F	6	U	12340*	–	L,Y	
11327	X	2.3 II	M	5	U	12330*	–	L,Y	

HOUSING PART NUMBER LIST

Part No. of Connector Body	Supply	Terminal	Male Female	Cav. No.	Sealing Ability	Part No. of Repair Wire		Sleeve Color	Memo
						160 mm Type	500 mm Type		
90980–						82998–	82998–		
11328	X	1.3	M	4	S	12630	–	L	Inner
11329	X	1.3	F	4	S	12650	–	L	Outer
11330	X	1.3	F	4	S	12650	–	L	Inner
11331	X	2.3 II	M	10	U	–	–	–	PCB
11332	O	4.8	F	2	S	12480	–	Y	
		2.3 II		8		12440*	12590	L,Y	
11333	X	1.8	M	4	U	12180	–	L	
		1.0		22		–	–	–	
11334	X	1.3	M	17	U	12410	–	L	
11335	X	1.3	F	17	U	12420	–	L	
11336	X	1.3	F	3	U	12420	–	L	
11337	X	2.3 II	M	14	U	–	–	–	PCB
11338	X	1.0	M	80	S	–	–	–	
11339	X	1.3	M	7	U	–	–	–	PCB
11340	X	1.3	F	7	U	12420	–	L	
11341	X	2.3 II	M	3	S	12430*	–	L,Y	
11342	X	1.0	M	40	U	–	–	–	
11343	X	1.0	M	28	U	–	–	–	PCB
11344	X	1.0	M	16	U	–	–	–	
11345	X	1.0	M	22	U	–	–	–	
11346	X	1.0	M	34	U	–	–	–	
11347	X	LA	F	40	U	–	–	–	
11348	O	2.3 II	M	3	S	12430*	–	L,Y	
11349	O	2.3 II	F	3	S	12440*	12590	L,Y	
11350	X	1.3	F	13	U	12420	–	L	
11351	X	2.3 II	M	16	U	–	–	–	PCB
11352	X	1.0 II	M	60	U	–	–	–	PCB
		1.8 II		16		–	–	–	
11353	X	2.3 II	M	8	U	12330*	–	L,Y	
11354	X	2.3 II	F	8	U	12340*	–	L,Y	
11355	X	4.8	M	4	U	12370	–	Y	
		2.3 II		38		12330*	–	L,Y	
		8.0		1		12390	–	Y	
11356	X	4.8	M	4	U	12370	–	Y	
		2.3 II		24		12330*	–	L,Y	
11357	X	2.3 II	M	27	U	12330*	–	L,Y	
11359	X	4.8	F	4	U	12380	–	Y	
		2.3 II		51		12340*	–	L,Y	

HOUSING PART NUMBER LIST

Part No. of Connector Body	Supply	Terminal	Male Female	Cav. No.	Sealing Ability	Part No. of Repair Wire		Sleeve Color	Memo
						160 mm Type	500 mm Type		
90980–						82998–	82998–		
		4.8		4		12380	–	Y	
11360	X	2.3 II	F	38	U	12340*	–	L,Y	
		8.0		1		12400	–	Y	
11361	X	4.8	M	4	U	–	–	–	PCB
		2.3 II		4		–	–	–	
11362	X	4.8	F	4	U	12380	–	Y	
		2.3 II		4		12340*	–	L,Y	
11363	O	2.3 II	F	1	S	12440*	12590	L,Y	
11364	O	1.0 III	M	81	U	–	–	–	PCB
		1.0 IV		24		–	–	–	
11365	X	4.8	M	2	U	–	–	–	PCB
		2.3 II		8		–	–	–	
11366	X	4.8	F	2	U	12380	–	Y	
		2.3 II		8		12340*	–	L,Y	
11367	X	1.3	M	2	U	12410	–	L	
11368	O	1.3	M	2	U	12410	–	L	
11369	O	1.3	F	2	U	12420	–	L	
11370	X	2.3 II	M	15	U	12330*	–	L,Y	
11371	X	2.3 II	M	15	U	12330*	–	L,Y	
11372	X	2.3 II	F	15	U	12340*	–	L,Y	
11373	X	2.3 II	M	25	U	12330*	–	L,Y	
11374	X	2.3 II	M	25	U	12330*	–	L,Y	
11375	X	2.3 II	F	25	U	12340*	–	L,Y	
11376	X	1.3	M	19	U	12410	–	L	
11377	X	1.3	F	19	U	12420	–	L	
11378	X	1.3	M	21	U	12410	–	L	
11379	X	1.3	F	21	U	12420	–	L	
11380	X	1.3	M	23	U	12410	–	L	
11381	X	1.3	F	23	U	12420	–	L	
11382	X	2.3 II	M	14	U	–	–	–	PCB
11383	X	2.3 II	F	14	U	12340*	–	L,Y	
11384	X	1.3	M	13	U	–	–	–	PCB
11385	X	8.0	M	3	U	12390	–	Y	
11386	X	8.0	F	2	U	12400	–	Y	
11387	X	4.8	F	1	U	12380	–	Y	
		8.0		2		12400	–	Y	
11388	X	2.3 II	F	2	U	12340*	–	L,Y	
11389	X	1.3	M	8	U	–	–	–	PCB

HOUSING PART NUMBER LIST

Part No. of Connector Body	Supply	Terminal	Male Female	Cav. No.	Sealing Ability	Part No. of Repair Wire		Sleeve Color	Memo
						160 mm Type	500 mm Type		
90980–						82998–	82998–		
11390	O	1.0 II	F	16	U	24020*	–	L	
		1.8 II		10		24100*	–	L,Y	
11391	O	1.0 II	F	16	U	24020*	–	L	
11392	O	1.0 II	F	16	U	24020*	–	L	
		1.8 II		6		24100*	–	L,Y	
11393	X	1.3	M	13	U	12410	–	L	
11394	X	1.3	F	13	U	12420	–	L	
11395	X	2.3 II	M	2	U	12330*	–	L,Y	
11396	X	2.3 II	F	2	U	12340*	–	L,Y	
11397	X	2.3 II	F	8	U	12340*	–	L,Y	
11398	X	2.3 II	F	4	U	12340*	–	L,Y	
11399	O	2.3 II	M	4	U	12330*	–	L,Y	
11400	O	4.8	F	1	S	12480	–	Y	
11401	X	2.3 II	F	2	S	12440*	12590	L,Y	
11402	X	1.3	M	7	U	–	–	–	PCB
11403	X	1.3	M	25	U	12410	–	L	
11404	X	1.3	F	25	U	12420	–	L	
11405	X	1.8	M	12	U	–	–	–	
		1.0 II		32		–	–	–	PCB
		1.8 II		10		–	–	–	
11406	X	1.0 II	F	22	U	24020*	–	L	
		1.8 II		4		24100*	–	L,Y	
11407	X	2.3 II	M	3	S	12430*	–	L,Y	w/o Clamp
11408	O	1.0 II	F	12	U	24020*	–	L	
11409	X	4.8	M	2	S	12470	–	Y	
11410	O	4.8	F	2	S	12480	–	Y	
11411	X	1.3	M	21	U	–	–	–	PCB
		2.3 II		4		–	–	–	
11412	O	4.8	M	3	S	12470	–	Y	
		2.3 II		2		12430*	–	L,Y	
11413	O	4.8	F	3	S	12480	–	Y	
		2.3 II		2		12440*	12590	L,Y	
11414	X	SL	F	3	S	–	–	–	
11415	X	2.3 II	M	16	U	12330*	–	L,Y	
11416	X	2.3 II	F	16	U	12340*	–	L,Y	
11417	O	2.3 II	F	17	U	12340*	–	L,Y	
11418	X	1.8	M	12	U	–	–	–	
		1.0 II		16		–	–	–	PCB
		1.8 II		10		–	–	–	

HOUSING PART NUMBER LIST

Part No. of Connector Body	Supply	Terminal	Male Female	Cav. No.	Sealing Ability	Part No. of Repair Wire		Sleeve Color	Memo
						160 mm Type	500 mm Type		
90980–11419	X	2.3 II	M	10	U	82998––	82998––	–	PCB
11420	X	2.3	F	17	U	12170	–	L	
11421	O	1.0 III	F	20	U	12690*	–	L	
		1.0 IV		11		12740	–	L	
11422	X	1.0 II	F	18	U	24020*	–	L	
		1.8 II		8		24100*	–	L,Y	
11423	O	1.0 II	F	16	U	24020*	–	L	
		1.8 II		10		24100*	–	L,Y	
11424	O	1.8 II	F	12	U	24100*	–	L,Y	
11425	X	1.0 II	F	16	U	24020*	–	L	
11426	X	2.3 II	M	4	U	–	–	–	PCB
11427	X	2.3 II	F	4	U	12340*	–	L,Y	
11428	O	2.3 II	F	1	S	12440*	12590	L,Y	
11429	X	2.3 II	F	2	U	12340*	–	L,Y	
11430	X	4.8	M	4	U	12370	–	Y	
		2.3 II		40		12330*	–	L,Y	
		8.0		5		12390	–	Y	
11431	X	4.8	F	4	U	12380	–	Y	
		2.3 II		40		12340*	–	L,Y	
		8.0		5		12400	–	Y	
11432	X	1.8 II	F	20	U	24100*	–	L,Y	
11433	O	1.8 II	F	14	U	24040	–	L,Y	
		1.8 II		14		24100*	–	L,Y	
11434	X	C–TYPE	M	16	U	12560	–	L	
11435	X	C–TYPE	F	16	U	12570	–	L	
11436	O	1.3	F	2	U	12420	–	L	
11437	X	2.3 II	F	14	U	12340*	–	L,Y	
11438	X	4.8	M	3	U	12370	–	Y	
		2.3 II		5		12330*	–	L,Y	
11439	X	4.8	F	3	U	12380	–	Y	
		2.3 II		5		12340*	–	L,Y	
11440	X	2.3 II	M	20	U	12330*	–	L,Y	
11441	X	2.3 II	F	20	U	12340*	–	L,Y	
11442	X	2.3 II	M	20	U	12330*	–	L,Y	
11443	X	2.3 II	F	20	U	12340*	–	L,Y	
11444	O	2.3 II	M	16	U	12330*	–	L,Y	
11445	X	2.3 II	F	16	U	12340*	–	L,Y	
11447	X	2.3 II	M	2	S	12430*	–	L,Y	
11448	X	2.3 II	F	2	S	12440*	12590	L,Y	

HOUSING PART NUMBER LIST

Part No. of Connector Body	Supply	Terminal	Male Female	Cav. No.	Sealing Ability	Part No. of Repair Wire		Sleeve Color	Memo
						160 mm Type	500 mm Type		
90980–11449	X	1.3	M	10	U	82998––	82998––	–	PCB
11450	O	1.3	F	10	U	12420	–	L	
11451	O	2.3 II	F	3	S	–	12790*	L,Y	
11452	X	2.3 II	M	6	U	12330*	–	L,Y	
11453	X	2.3 II	F	12	U	12340*	–	L,Y	
11459	X	2.3 II	F	8	U	12340*	–	L,Y	
11460	X	4.8 2.3 II	M	2 6	S	12470 12430*	– –	Y L,Y	
11461	X	4.8 2.3 II	F	2 6	S	12480 12440*	– 12590	Y L,Y	
11462	X	1.3	M	16	S	12630	–	L	
11463	X	1.3	F	16	S	12650	–	L	
11464	X	2.3 II	M	14	U	–	–	–	PCB
11465	X	2.3 II	F	14	U	12340*	–	L,Y	
11466	X	2.3 II	M	2	S	12430*	–	L,Y	
11467	O	2.3 II	F	2	S	12440*	12590	L,Y	
11468	X	1.3	M	22	U	–	–	–	PCB
11469	O	1.3 2.3 II	F	16 4	U	12420 12340*	– –	L L,Y	
11470	X	1.3	M	3	U	12410	–	L	
11471	O	1.3	F	3	U	12420	–	L	
11472	X	1.3 2.3 II	M	30 4	U	– –	– –	– –	PCB
11473	X	1.3 2.3 II	M	21 4	U	– –	– –	– –	PCB
11474	X	1.3	M	12	U	–	–	–	PCB
11475	O	1.3	F	12	U	12420	–	L	
11476	O	1.0 III 1.0 IV	F	17 7	U	12690* 12740	– –	L L	
11477	X	LAC	M	22	U	12100	–	L,Y	
11478	X	LAC	F	13	U	12110	–	L,Y	
11479	X	LAC	F	9	U	12110	–	L,Y	
11483	X	1.3 2.3 II	M	21 4	U	– –	– –	– –	PCB
11484	X	2.3 II 8.0	M	1 2	U	12330* 12390	– –	L,Y Y	
11485	X	2.3 II 8.0	F	1 2	U	12340* 12400	– –	L,Y Y	
11486	O	2.3 II	M	2	S	12430*	–	L,Y	

HOUSING PART NUMBER LIST

Part No. of Connector Body	Supply	Terminal	Male Female	Cav. No.	Sealing Ability	Part No. of Repair Wire		Sleeve Color	Memo
						160 mm Type	500 mm Type		
90980– 11487	X	1.3	M	6	U	82998– 12410	82998– –	L	
11488	X	1.3	F	6	U	12420	–	L	
11489	X	1.3	M	3	U	12410	–	L	
11490	O	1.3	F	3	U	12420	–	L	
11491	X	6.3	F	3	S	12540	–	Y	
11492	X	1.3 2.3 II	M	4 2	U	12410 12330*	– –	L L,Y	
11493	X	1.3 2.3 II	F	4 2	U	12420 12340*	– –	L L,Y	
11494	O	1.3	F	4	U	12420	–	L	
11495	X	1.3	F	4	U	12420	–	L	
11496	X	1.3	M	18	U	–	–	–	PCB
11497	X	1.3	F	18	U	12420	–	L	
11498	X	1.3	M	20	U	12410	–	L	
11499	X	1.3	F	20	U	12420	–	L	
11500	X	1.3	M	12	U	12410	–	L	
11501	O	1.3 2.3 II	M	16 4	U	– –	– –	– –	PCB
11502	O	1.3	F	22	U	12420	–	L	
11503	O	1.3	M	22	U	12410	–	L	
11504	O	1.3 2.3 II	M	16 4	U	12410 12330*	– –	L L,Y	
11505	X	1.3	M	17	U	12410	–	L	
11506	X	1.3	F	17	U	12420	–	L	
11507	X	1.3	M	64	U	–	–	–	PCB
11508	X	1.3	F	40	U	12420	–	L	
11509	X	1.3	F	24	U	12420	–	L	
11510	X	1.3	M	14	U	–	–	–	PCB
11511	X	1.3	F	14	U	12420	–	L	
11512	X	ABS	F	2	U	–	–	–	
11514	X	ABS	F	32	U	–	–	–	
11517	X	ABS	F	6	S	–	–	–	
11519	X	ABS	F	2	S	–	–	–	
11520	X	ABS	F	2	S	–	–	–	
11522	X	ABS	F	4	S	–	–	–	
11524	X	ABS	F	12	U	–	–	–	
11526	X	4.8 2.3 II	M	2 8	U	– –	– –	– –	PCB

HOUSING PART NUMBER LIST

Part No. of Connector Body	Supply	Terminal	Male Female	Cav. No.	Sealing Ability	Part No. of Repair Wire		Sleeve Color	Memo
						160 mm Type	500 mm Type		
90980–						82998–	82998–		
11527	O	4.8	F	2	U	12380	–	Y	
		2.3 II		8		12340*	–	L,Y	
11528	O	2.3 II	M	7	U	12330*	–	L,Y	
11529	O	2.3 II	F	7	U	12340*	–	L,Y	
11530	O	2.3 II	M	12	U	12330*	–	L,Y	
11531	O	2.3 II	F	12	U	12340*	–	L,Y	
11532	O	1.3	M	8	U	12410	–	L	
11533	O	1.3	F	8	U	12420	–	L	
11534	O	2.3 II	M	9	U	12330*	–	L,Y	
11535	O	2.3 II	F	9	U	12340*	–	L,Y	
11536	O	2.3 II	M	10	U	12330*	–	L,Y	
11537	O	2.3 II	F	10	U	12340*	–	L,Y	
11538	O	2.3 II	M	11	U	12330*	–	L,Y	
11539	O	2.3 II	F	11	U	12340*	–	L,Y	
11540	X	2.3 II	F	2	S	12440*	12590	L,Y	
11541	O	2.3 II	M	13	U	12330*	–	L,Y	
11542	O	2.3 II	F	13	U	12340*	–	L,Y	
11543	X	2.3 II	M	9	U	–	–	–	PCB
11544	O	1.3	M	10	U	–	–	–	PCB
11545	X	2.3 II	M	2	U	12330*	–	L,Y	
11546	X	4.8	M	4	U	12370	–	Y	
		2.3 II		12		12330*	–	L,Y	
11547	X	4.8	F	4	U	12380	–	Y	
		2.3 II		12		12340*	–	L,Y	
11548	X	1.8	M	8	U	–	–	–	PCB
		1.0		18		–	–	–	
11549	X	1.8 II	M	34	U	24030	–	L,Y	
		1.8 II		34		24090	–	L,Y	
11550	X	1.8	M	12	U	–	–	–	PCB
11551	X	4.8	M	8	U	12370	–	Y	
11552	O	1.3	F	16	U	12420	–	L	
		2.3 II		22		12340*	–	L,Y	
11553	X	1.3	M	5	U	–	–	–	PCB
11554	X	1.3	M	16	U	12410	–	L	
		2.3 II		22		12330*	–	L,Y	
11555	X	1.3	F	16	U	12420	–	L	
		2.3 II		22		12340*	–	L,Y	
11556	O	1.3	F	14	U	12420	–	L	
11557	X	1.3	M	60	U	–	–	–	PCB

HOUSING PART NUMBER LIST

Part No. of Connector Body	Supply	Terminal	Male Female	Cav. No.	Sealing Ability	Part No. of Repair Wire		Sleeve Color	Memo
						160 mm Type	500 mm Type		
90980–11558	X	1.3	F	20	U	82998–12420	82998– –	L	
11559	X	1.3 2.3 II	M	8 9	U	12410 12330*	– –	L L,Y	
11560	X	1.3 2.3 II	F	8 9	U	12420 12340*	– –	L L,Y	
11561	X	1.3 2.3 II	M	6 10	U	12410 12330*	– –	L L,Y	
11562	X	1.3 2.3 II	F	6 10	U	12420 12340*	– –	L L,Y	
11563	O	1.8 1.0	M	10 32	U	– –	– –	– –	PCB
11564	O	1.0 II 1.8 II	M	26 16	U	– –	– –	– –	PCB
11565	O	1.0 II 1.8 II	F	10 6	U	24020* 24100*	– –	L L,Y	
11566	X	1.0 II	F	40	S	24060	–	L	
11567	X	1.0 II	M	40	S	–	–	–	PCB
11568	X	2.3 II	M	13	U	12330*	–	L,Y	
11569	X	2.3 II 8.0	F	2 2	S	12440* 12500	12590 –	L,Y Y	
11570	O	1.3	M	19	U	12410	–	L	
11571	O	1.3	F	19	U	12420	–	L	
11572	O	1.3	M	52	U	–	–	–	PCB
11573	O	1.3	M	16	U	12410	–	L	
11574	O	1.3	F	16	U	12420	–	L	
11575	O	1.8 1.0	M	22 32	U	– –	– –	– –	PCB
11576	O	1.8 1.0	M	16 48	U	– –	– –	– –	PCB
11577	O	1.8 1.0	M	16 60	U	– –	– –	– –	PCB
11578	O	1.0	M	100	U	–	–	–	PCB
11579	O	8.0	F	2	U	12400	–	Y	
11580	X	1.3	M	10	U	12410	–	L	
11581	X	1.3	F	10	U	12420	–	L	
11582	X	1.3	M	8	U	12410	–	L	
11583	O	4.8	F	6	U	12380	–	Y	
11585	X	2.3 II	M	16	U	–	–	–	PCB
11586	X	1.0 III	F	17	U	12640	–	L	IDC

HOUSING PART NUMBER LIST

Part No. of Connector Body	Supply	Terminal	Male Female	Cav. No.	Sealing Ability	Part No. of Repair Wire		Sleeve Color	Memo
						160 mm Type	500 mm Type		
90980–11587	O	2.3 II	M	6	U	82998–12330*	82998– –	L,Y	
11588	X	1.3	M	8	U	12410	–	L	
11589	X	1.3	M	2	U	–	–	–	PCB
11590	X	1.3 2.3 II	M	8 6	U	12410 12330*	– –	L L,Y	
11591	X	1.3 2.3 II	F	8 6	U	12420 12340*	– –	L L,Y	
11592	O	2.3 II	F	8	S	12440*	12590	L,Y	
11593	X	2.3 II	F	8	S	12440*	12590	L,Y	
11594	O	1.3 2.3 II	F	10 8	U	12420 12340*	– –	L L,Y	
11595	O	1.3 2.3 II	F	10 8	U	12420 12340*	– –	L L,Y	
11596	O	4.8 2.3 II	M	2 8	U	12370 12330*	– –	Y L,Y	
11597	X	1.8 1.0	M	10 32	U	– –	– –	– –	PCB
11598	O	2.3 II	M	5	S	12430*	–	L,Y	
11599	O	2.3 II	F	5	S	12440*	12590	L,Y	
11600	O	4.8 2.3 II 8.0	M	3 12 2	S	12470 12430* 12490	– – –	Y L,Y Y	
11601	X	4.8 2.3 II 8.0	F	3 12 2	S	12480 12440* 12500	– 12590 –	Y L,Y Y	
11602	X	4.8 2.3 II	M	2 3	U	12370 12330*	– –	Y L,Y	
11603	X	4.8 2.3 II	F	2 3	U	12380 12340*	– –	Y L,Y	
11604	O	2.3 II	F	13	U	12340*	–	L,Y	
11605	X	1.3 2.3 II	M	2 2	U	12410 12330*	– –	L L,Y	
11606	X	1.3 2.3 II	F	2 2	U	12420 12340*	– –	L L,Y	
11607	X	2.3 II	M	3	S	12430*	–	L,Y	
11608	O	2.3 II	F	2	U	12340*	–	L,Y	
11609	X	4.8 2.3 II	M	3 8	S	12470 12430*	– –	Y L,Y	

HOUSING PART NUMBER LIST

Part No. of Connector Body	Supply	Terminal	Male Female	Cav. No.	Sealing Ability	Part No. of Repair Wire		Sleeve Color	Memo
						160 mm Type	500 mm Type		
90980–						82998–	82998–		
11610	X	4.8	M	4	U	12370	–	Y	
		2.3 II		22		12330*	–	L,Y	
11611	X	4.8	F	4	U	12380	–	Y	
		2.3 II		22		12340*	–	L,Y	
11612	X	4.8	F	3	S	12480	–	Y	
		2.3 II		8		12440*	12590	L,Y	
11613	O	1.3	M	8	U	12410	–	L	
		2.3 II		2		12330*	–	L,Y	
11614	X	1.3	F	8	U	12420	–	L	
		2.3 II		2		12340*	–	L,Y	
11615	O	4.8	F	8	U	12380	–	Y	
11616	O	1.3	F	6	U	12420	–	L	
11617	X	2.3 II	F	6	U	12340*	–	L,Y	
11618	X	1.3	F	40	U	12420	–	L	
11619	X	1.0 II	M	16	U	–	–	–	PCB
		1.8 II		18		–	–	–	
11620	X	1.3	M	3	U	–	–	–	PCB
11621	X	1.3	M	22	U	–	–	–	PCB
11622	O	2.3 II	M	3	S	12430*	–	L,Y	
11623	O	1.3	M	8	U	12410	–	L	
11624	X	1.3	M	6	U	–	–	–	PCB
		2.3 II		10		–	–	–	
11625	X	1.3	M	5	U	–	–	–	PCB
		4.8		2		–	–	–	
		2.3 II		17		–	–	–	
11626	X	2.3 II	F	12	U	12340*	–	L,Y	
11627	X	1.3	M	20	U	12410	–	L	
11628	O	1.3	F	22	U	12420	–	L	
11629	O	1.3	M	8	U	–	–	–	PCB
11630	O	1.3	F	8	U	12420	–	L	
11631	O	4.8	M	6	U	12370	–	Y	
		2.3 II		20		12330*	–	L,Y	
11632	X	4.8	F	6	U	12380	–	Y	
		2.3 II		20		12340*	–	L,Y	
11633	X	1.3	F	8	U	12420	–	L	
11634	X	1.3	M	12	U	–	–	–	PCB
11635	X	1.3	M	13	U	–	–	–	PCB
11636	X	1.3	M	8	U	–	–	–	PCB
11637	O	1.0 III	F	28	U	12690*	–	L	

HOUSING PART NUMBER LIST

Part No. of Connector Body	Supply	Terminal	Male Female	Cav. No.	Sealing Ability	Part No. of Repair Wire		Sleeve Color	Memo
						160 mm Type	500 mm Type		
90980– 11638	O	1.0 III 1.0 IV	F	16 6	U	82998– 12690* 12740	82998– – –	 L L	
11639	X	–	–	–	–	–	–	–	
11640	X	6.3 II	F	4	S	24160	–	L	
11641	O	1.3	M	10	U	–	–	–	PCB
11642	O	1.3	F	10	U	12420	–	L	
11643	O	4.8 2.3 II	F	2 7	S	12480 12440*	– 12590	Y L,Y	
11644	X	1.3	M	14	U	–	–	–	PCB
11645	X	1.3 2.3 II	M	60 10	U	– –	– –	– –	PCB
11646	X	1.3 2.3 II	M	36 16	U	– –	– –	– –	PCB
11647	X	1.3 2.3 II	M	20 16	U	– –	– –	– –	PCB
11648	X	1.3	F	16	U	12420	–	L	
11649	O	2.3 II	F	12	U	12340*	–	L,Y	
11650	X	1.8 1.0	M	22 32	U	– –	– –	– –	PCB
11651	X	1.3 2.3 II	M	8 6	U	– –	– –	– –	PCB
11652	X	1.3 2.3 II	F	10 6	U	12420 12340*	– –	L L,Y	
11653	O	2.3 II	F	10	S	12440*	12590	L,Y	
11654	O	1.3	M	14	U	12410	–	L	
11655	O	8.0	M	2	U	12390	–	Y	
11656	O	2.3 II	F	12	U	12340*	–	L,Y	
11657	O	1.3	F	10	U	12420	–	L	
11658	O	2.3 II	F	10	S	12440*	12590	L,Y	
11659	O	HEAD-LAMP	F	2	S	24150	24190	L,Y	
11660	O	HEAD-LAMP	F	2	S	24150	24190	L,Y	
11661	O	2.3 II	F	12	U	12340*	–	L,Y	
11662	X	8.0	F	4	U	12400	–	Y	
11663	X	2.3 II	F	6	S	12440*	12590	L,Y	
11664	X	2.3 II	F	12	S	12440*	12590	L,Y	
11665	O	OBD II	F	16	U	–	–	–	
11666	X	–	–	–	–	–	–	–	

HOUSING PART NUMBER LIST

Part No. of Connector Body	Supply	Terminal	Male Female	Cav. No.	Sealing Ability	Part No. of Repair Wire		Sleeve Color	Memo
						160 mm Type	500 mm Type		
90980– 11667	X	4.8 8.0	F	1 2	U	82998– 12380 12400	82998– – –	 Y Y	
11669	X	2.3 II	M	27	U	12330*	–	L,Y	
11670	X	2.3 II	F	27	U	12340*	–	L,Y	
11671	O	1.3 2.3 II	F	8 9	U	12420 12340*	– –	L L,Y	
11672	X	1.3 2.3 II	F	8 9	U	12420 12340*	– –	L L,Y	
11676	X	8.0	F	4	U	12400	–	Y	
11677	X	2.3 II	F	15	S	12440*	12590	L,Y	
11680	X	1.3	M	16	U	12410	–	L	
11681	X	1.3	F	16	U	12420	–	L	
11682	X	1.3	M	16	U	12410	–	L	
11683	X	1.3	F	16	U	12420	–	L	
11684	O	8.0	F	2	U	12400	–	Y	
11685	O	8.0	F	3	U	12400	–	Y	
11686	O	4.8	F	8	U	12380	–	Y	
11687	X	6.3	F	2	U	12060	12580	Y	
11688	X	1.3	M	5	S	12630	–	L	
11689	X	1.3	M	5	S	12630	–	L	
11690	X	1.3	F	5	S	12650	–	L	Outer
11691	X	1.3	F	5	S	12650	–	L	Inner
11693	X	2.3 II	F	12	U	12340*	–	L,Y	
11694	X	2.3 II	M	13	U	12330*	–	L,Y	
11695	X	2.3 II	F	13	U	12340*	–	L,Y	
11696	X	1.5	M	6	U	–	–	–	PCB
11697	X	1.5	F	6	U	–	–	–	
11698	O	1.3	F	12	S	12650	–	L	
11700	X	1.0 II 1.8 II	M	32 10	U	– –	– –	– –	PCB
11701	O	4.8 2.3 II	F	4 4	U	12380 12340*	– –	Y L,Y	
11703	X	2.3 II	F	1	U	12340*	–	L,Y	
11709	X	2.3 II	M	9	U	12330*	–	L,Y	
11710	X	2.3 II	F	9	U	12340*	–	L,Y	
11714	X	2.3 II	F	13	U	12340*	–	L,Y	
11716	X	1.3 2.3 II	F	10 8	U	12420 12340*	– –	L L,Y	
11720	X	2.3 II	F	12	U	12340*	–	L,Y	

HOUSING PART NUMBER LIST

Part No. of Connector Body	Supply	Terminal	Male Female	Cav. No.	Sealing Ability	Part No. of Repair Wire		Sleeve Color	Memo
						160 mm Type	500 mm Type		
90980–11724	X	2.3 II	M	2	U	82998–12350*	82998– –	L,Y	
11731	X	HEAD-LAMP	F	3	U	24140	24200	L,Y	
11733	O	1.8	M	22	U	–	–	–	PCB
		1.0		16		–	–	–	
		1.0 II		16		–	–	–	
		1.8 II		22		–	–	–	
11735	X	2.3 II	M	2	U	12330*	–	L,Y	
11736	O	2.3 II	F	2	U	12340*	–	L,Y	
11737	X	2.3 II	M	1	U	12330*	–	L,Y	
11738	X	2.3 II	F	1	U	12340*	–	L,Y	
11739	X	2.3 II	M	7	U	12330*	–	L,Y	
11740	X	2.3 II	F	7	U	12340*	–	L,Y	
11742	O	4.8	F	4	U	12380	–	Y	
11743	X	1.3	M	14	U	–	–	–	PCB
11744	X	1.3	M	14	U	–	–	–	PCB
11745	X	1.3	M	18	U	–	–	–	PCB
11746	X	1.3	M	22	U	–	–	–	PCB
11747	X	2.3 II	M	12	U	–	–	–	PCB
11748	X	2.3 II	M	18	U	–	–	–	PCB
11749	X	2.3 II	M	20	U	–	–	–	PCB
11750	X	2.3 II	M	20	U	–	–	–	PCB
11751	X	2.3 II	M	18	U	–	–	–	PCB
11752	X	2.3 II	M	10	U	–	–	–	PCB
11753	X	2.3 II	M	14	U	–	–	–	PCB
11757	X	2.3 II	M	10	U	12330*	–	L,Y	
11763	X	2.3 II	M	3	U	12330*	–	L,Y	
11764	O	2.3 II	F	3	U	12340*	–	L,Y	
11765	X	2.3 II	M	4	U	12330*	–	L,Y	
11766	X	2.3 II	F	4	U	12340*	–	L,Y	
11767	X	2.3 II	M	1	U	12330*	–	L,Y	
11769	X	2.3 II	F	2	U	12340*	–	L,Y	
11771	X	4.8	F	2	U	12380	–	Y	
		2.3 II		2		12340*	–	L,Y	
11772	X	2.3 II	F	5	U	12340*	–	L,Y	
11773	X	2.3 II	F	2	S	12440*	12590	L,Y	
11774	X	9.5	M	1	U	–	–	–	
11775	X	9.5	F	1	U	–	–	–	
11777	X	1.3	F	3	U	12420	–	L	

HOUSING PART NUMBER LIST

Part No. of Connector Body	Supply	Terminal	Male Female	Cav. No.	Sealing Ability	Part No. of Repair Wire		Sleeve Color	Memo
						160 mm Type	500 mm Type		
90980– 11778	O	4.8	F	6	U	82998– 12380	82998– –	Y	
11779	O	2.3 II	M	4	U	12330*	–	L,Y	
11780	O	2.3 II	F	6	U	12340*	–	L,Y	
11781	X	2.3 II	F	10	U	12340*	–	L,Y	
11782	X	2.3 II	F	12	U	12340*	–	L,Y	
11784	O	4.8 2.3 II	F	2 7	S	12480 12440*	– 12590	Y L,Y	
11785	X	1.0 J 1.8 J	M	48 16	U	– –	– –	– –	PCB
11786	X	1.0 J 1.8 J	F	16 10	U	– –	– –	– –	
11787	X	1.0 J	F	16	U	–	–	–	
11788	X	1.0 J 1.8 J	F	16 6	U	– –	– –	– –	
11789	X	1.0 III	M	2	S	12710	–	L	
11790	X	1.0 III	F	2	S	12720*	–	L	
11791	X	2.3 II	F	14	U	12340*	–	L,Y	
11792	X	2.3 II	F	4	U	12340*	–	L,Y	
11794	X	VH	F	7	U	–	–	–	
11797	X	2.3 II	F	5	U	12340*	–	L,Y	
11799	X	4.8	F	4	U	12380	–	Y	
11800	X	2.3 II	F	10	U	12340*	–	L,Y	
11805	X	2.3 II	F	14	U	12340*	–	L,Y	
11809	X	4.8	M	4	U	12370	–	Y	
11812	X	2.3 II	M	4	U	12330*	–	L,Y	
11814	X	2.3 II	M	6	U	12330*	–	L,Y	
11817	X	2.3 II	F	10	U	12340*	–	L,Y	
11820	X	2.3 II	F	6	U	12340*	–	L,Y	
11823	X	2.3 II	M	10	U	12330*	–	L,Y	
11824	X	8.0	F	2	U	12400	–	Y	
11827	X	2.3 II	F	13	U	12340*	–	L,Y	
11839	X	2.3 II	F	2	U	12340*	–	L,Y	
11840	X	2.3 II	F	2	U	12340*	–	L,Y	
11841	X	2.3 II	F	4	U	12340*	–	L,Y	
11842	X	2.3 II	F	4	U	12340*	–	L,Y	
11843	X	2.3 II	M	5	U	12330*	–	L,Y	
11847	X	2.3 II	F	12	U	12340*	–	L,Y	
11848	X	2.3 II	F	13	U	12340*	–	L,Y	

HOUSING PART NUMBER LIST

Part No. of Connector Body	Supply	Terminal	Male Female	Cav. No.	Sealing Ability	Part No. of Repair Wire		Sleeve Color	Memo
						160 mm Type	500 mm Type		
90980– 11851	X	4.8 2.3 II	F	4 20	S	82998– 12480 –	82998– – 12790*	Y L,Y	
11853	X	6.3	F	1	U	12060	12580	Y	
11854	X	1.0 III	M	2	S	12710	–	L	
11856	O	1.0 III	F	2	S	12720*	–	L	
11857	X	1.0 III	F	4	S	12720*	–	L	
11858	O	2.3 II	F	6	S	12440*	12590	L,Y	
11859	X	2.3 II	F	2	S	12440*	12590	L,Y	
11860	X	2.3 II	F	3	S	12440*	12590	L,Y	
11861	X	4.8 1.5	F	25 25	S	12480 –	– –	Y –	
11862	O	PAI 1	F	2	U	–	–	–	
11863	X	1.0 III	M	2	S	12710	–	L	
11864	X	1.0 III	F	2	S	12720*	–	L	
11865	X	1.0 III	M	2	S	12710	–	L	
11866	X	1.0 III	M	44	U	–	–	–	PCB
11867	X	1.0 III	F	12	U	12690*	–	L	
11868	X	1.0 III	F	20	U	12690*	–	L	
11869	X	1.0 III	F	12	U	12690*	–	L	
11870	X	1.0 III	M	52	U	–	–	–	PCB
11871	X	1.0 III	F	12	U	12690*	–	L	
11872	X	1.0 III	F	28	U	12690*	–	L	
11873	X	1.0 III	F	12	U	12690*	–	L	
11874	X	2.3 II	M	3	U	–	–	–	PCB
11875	O	2.3 II	F	2	S	–	12790*	L,Y	
11876	X	1.0 III 2.3 II	M	19 6	U	– –	– –	– –	PCB
11877	O	1.0 III 2.3 II	F	19 6	U	12690* 12340*	– –	L L,Y	
11878	O	4.8	M	4	U	12370	–	Y	
11879	X	4.8	F	6	U	12380	–	Y	
11880	X	8.0	F	3	U	12400	–	Y	
11881	X	9.5	F	1	U	–	–	–	
11882	X	4.8 2.3 II	F	4 20	S	12480 –	– 12790*	Y L,Y	
11883	X	1.0 III	M	2	U	12670*	–	L	
11884	X	1.0 III	F	2	U	12690*	–	L	
11885	O	2.3 II	F	4	S	–	12790*	L,Y	
11886	O	1.0 III	F	2	U	12690*	–	L	

HOUSING PART NUMBER LIST

Part No. of Connector Body	Supply	Terminal	Male Female	Cav. No.	Sealing Ability	Part No. of Repair Wire		Sleeve Color	Memo
						160 mm Type	500 mm Type		
90980– 11889	X	1.0 III	M	2	U	82998– 12670*	82998– –	L	
11890	X	1.0 III	F	2	U	12690*	–	L	
11891	X	1.0 III	M	4	U	12670*	–	L	
11892	X	1.0 III	F	4	U	12690*	–	L	
11893	X	4.8 2.3 II	F	4 20	S	12480 –	– 12790*	Y L,Y	
11898	X	1.0 III	F	2	S	12720*	–	L	
11899	X	1.8 1.0	M	8 18	U	– –	– –	– –	PCB
11900	X	2.3 II	F	2	S	–	12790*	L,Y	
11901	X	2.3 II	M	2	S	12430*	–	L,Y	
11902	O	1.8 1.0	M	6 32	U	– –	– –	– –	PCB
11903	X	1.0 III 1.0 III	M	5 44	U	– –	– –	– –	PCB
11904	X	1.0 III	M	5	S	12710	–	L	
11905	X	1.3 2.3 II	M	16 4	U	– –	– –	– –	PCB
11906	X	SL	F	83	U	12130	–	L,Y	
11907	X	SL	F	3	S	–	–	–	
11908	X	SL	F	5	U	12130	–	L,Y	
11909	O	1.0 III	F	5	U	12690*	–	L	
11910	X	1.0 III	M	14	U	12670*	–	L	
11911	O	1.0 III	F	14	U	12690*	–	L	
11912	X	1.0 III	M	18	U	12670*	–	L	
11913	O	1.0 III	F	18	U	12690*	–	L	
11914	O	1.0 III	F	18	U	12640	–	L	IDC
11915	O	1.0 III	F	22	U	12690*	–	L	
11916	X	1.0 III	M	40	U	–	–	–	PCB
11917	X	1.0 III	M	2	U	12670*	–	L	
11918	O	1.0 III	F	2	U	12690*	–	L	
11919	O	1.0 III	F	2	U	12640	–	L	IDC
11920	O	1.0 III	M	5	U	12670*	–	L	
11921	O	1.0 III	F	5	U	12640	–	L	IDC
11922	X	1.0 III	M	10	U	12670*	–	L	
11923	O	1.0 III	F	10	U	12690*	–	L	
11924	O	1.0 III	F	10	U	12640	–	L	IDC
11925	O	1.0 III	F	14	U	12640	–	L	IDC
11926	O	1.0 III	M	22	U	12670*	–	L	

HOUSING PART NUMBER LIST

Part No. of Connector Body	Supply	Terminal	Male Female	Cav. No.	Sealing Ability	Part No. of Repair Wire		Sleeve Color	Memo
						160 mm Type	500 mm Type		
90980–11927	O	1.0 III	F	22	U	82998–12640	82998– –	L	IDC
11928	X	1.0 III	M	54	U	–	–	–	PCB
11929	X	2.3 II	M	4	S	12430*	–	L,Y	
11930	X	2.3 II	F	4	S	12440*	12590	L,Y	
11933	X	1.0 III	M	2	U	12670*	–	L	
11934	X	1.0 III 1.0 IV	M	81 24	U	– –	– –	– –	PCB
11935	X	1.0 III 1.0 IV	F	20 11	U	12690* 12740	– –	L L	
11936	X	8.0	M	3	U	12390	–	Y	
11937	X	INVERT-ER	M	3	U	–	–	–	
11938	X	INVERT-ER	F	3	U	–	–	–	
11939	O	–	–	–	–	–	–	–	
11940	X	PIN	M	2	S	–	–	–	
11941	X	LA	F	1	S	–	–	–	
11942	O	LA	F	1	S	–	–	–	
11943	X	SOCK-ET	F	1	S	–	–	–	
11944	O	SOCK-ET	F	1	S	–	–	–	
11945	O	PIN	M	2	S	–	–	–	
11946	X	1.0 III	M	5	U	–	–	–	PCB
11947	X	1.0 III 2.3 II	F	8 4	U	12690* 12340*	– –	L L,Y	
11948	O	1.0 III	F	10	U	12640	–	L	IDC
11949	X	1.0 III	M	18	U	–	–	–	PCB
11950	X	1.0 III	F	4	U	12690*	–	L	
11951	X	1.0 III	M	13	U	–	–	–	PCB
11952	X	1.0 III	F	13	U	12690*	–	L	
11953	X	1.0 III 2.3 II	M	64 14	U	– –	– –	– –	PCB
11954	X	1.0 III 2.3 II	F	8 9	U	12690* 12340*	– –	L L,Y	
11955	X	1.0 III	F	19	U	12690*	–	L	
11956	X	1.0 III	F	21	U	12690*	–	L	
11957	X	1.0 III 2.3 II	F	16 5	U	12690* 12340*	– –	L L,Y	
11960	X	2.3 II	F	5	S	12440*	12590	L,Y	

HOUSING PART NUMBER LIST

Part No. of Connector Body	Supply	Terminal	Male Female	Cav. No.	Sealing Ability	Part No. of Repair Wire		Sleeve Color	Memo
						160 mm Type	500 mm Type		
90980– 11961	X	1.0 III 1.0 III	M	5 28	U	82998– –	82998– –	– –	PCB
11962	X	9.5	M	1	S	–	–	–	
11963	X	9.5	F	1	S	–	–	–	
11964	O	2.3 II	F	4	S	12440*	12590	L,Y	
11965	X	8.0	M	4	U	–	–	–	PCB
11966	X	1.0 II	M	22	U	–	–	–	PCB
11967	O	1.0 III	M	2	U	12670*	–	L	
11968	X	1.0 III	M	5	U	–	–	–	PCB
11969	X	1.0 III	M	14	U	–	–	–	PCB
11970	X	1.0 III 2.3 II	M	16 4	U	– –	– –	– –	PCB
11971	X	1.0 III 2.3 II	F	16 4	U	12690* 12340*	– –	L L,Y	
11972	X	1.0 III 2.3 II	M	49 14	U	– –	– –	– –	PCB
11973	O	1.0 III 2.3 II	F	10 8	U	12690* 12340*	– –	L L,Y	
11974	X	1.0 III	F	20	U	12690*	–	L	
11976	O	–	–	–	–	–	–	–	
11978	X	OBD II	F	16	U	–	–	–	
11985	X	1.0 III	M	4	U	–	–	–	PCB
11986	O	1.0 III	F	6	U	12690*	–	L	
11987	X	1.0 III	F	3	U	12690*	–	L	
11988	O	1.0 III	F	4	U	12640	–	L	IDC
11989	X	1.0 III	F	8	U	12690*	–	L	
11990	X	1.0 III 2.3 II	M	37 18	U	– –	– –	– –	PCB
11992	X	1.0 III	M	2	U	12670*	–	L	
11993	X	1.0 III	M	10	U	–	–	–	PCB
11994	X	2.3 II	M	3	U	–	–	–	PCB
11995	O	–	–	–	–	–	–	–	
11996	X	9.5	F	2	U	–	–	–	
12002	X	1.0 III 2.3 II	M	6 5	U	12670* 12330*	– –	L L,Y	
12003	X	1.0 III 2.3 II	F	6 5	U	12690* 12340*	– –	L L,Y	
12004	X	1.0	M	6	U	–	–	–	IDC
12005	X	2.3 II	F	4	S	–	12790*	L,Y	

HOUSING PART NUMBER LIST

Part No. of Connector Body	Supply	Terminal	Male Female	Cav. No.	Sealing Ability	Part No. of Repair Wire		Sleeve Color	Memo
						160 mm Type	500 mm Type		
90980–12006	O	–	–	–	–	82998– –	82998– –	–	
12007	X	1.0 III 2.3 II	F	4 9	U	12690* 12340*	– –	L L,Y	
12008	O	1.0 III 2.3 II	F	2 8	U	12690* 12340*	– –	L L,Y	
12009	X	1.0 III	M	10	U	–	–	–	PCB
12010	X	1.0 III 2.3 II	M	10 8	U	– –	– –	– –	PCB
12011	X	1.0 III	M	18	U	–	–	–	PCB
12012	X	1.0 III	F	6	U	12690*	–	L	
12013	X	1.0 III	M	6	U	–	–	–	PCB
12014	X	2.3 II	F	2	U	12340*	–	L,Y	
12015	X	1.0 III	M	14	U	–	–	–	PCB
12016	X	1.0 III	M	4	U	12670*	–	L	
12017	X	1.0 III	F	4	U	12690*	–	L	
12018	X	2.3 II	F	4	U	12340*	–	L,Y	
12019	X	1.0 III	F	4	U	12640	–	L	IDC
12020	O	4.8 1.0 III	F	4 30	S	12480 12720*	– –	Y L	
12021	O	4.8 1.0 III	F	4 23	S	12480 12720*	– –	Y L	
12022	X	4.8 1.0 III	F	4 16	S	12480 12720*	– –	Y L	
12023	X	1.0 III	M	10	U	12660	–	L	IDC
12024	X	1.0 III	M	22	U	12670*	–	L	
12025	X	1.0 III 2.3 II	M	16 4	U	12670* 12330*	– –	L L,Y	
12026	X	2.3 II	F	9	U	24220	–	L	IDC
12027	X	2.3 II	F	13	U	24220	–	L	IDC
12028	O	2.3 II	F	2	S	12440*	12590	L,Y	
12029	X	1.0	M	2	U	–	–	–	
12030	X	1.0 III	M	22	U	–	–	–	PCB
12031	X	1.0 J 1.8 J	M	60 16	U	– –	– –	– –	PCB
12032	X	1.0 J	F	12	U	–	–	–	
12033	X	4.8 1.0 III	M	2 18	U	– –	– –	– –	PCB
12034	X	4.8 1.0 III	F	2 18	U	12380 12690*	– –	Y L	

HOUSING PART NUMBER LIST

Part No. of Connector Body	Supply	Terminal	Male Female	Cav. No.	Sealing Ability	Part No. of Repair Wire		Sleeve Color	Memo
						160 mm Type	500 mm Type		
90980– 12035	X	1.0 III 2.3 II	M	41 6	U	82998– –	82998– –	– –	PCB
12036	X	1.0 III	M	5	U	–	–	–	PCB
12037	X	1.0 III 2.3 II	M	16 4	U	– –	– –	– –	PCB
12038	O	1.0 III 2.3 II	F	16 4	U	12690* 12340*	– –	L L,Y	
12039	X	VH	F	2	U	–	–	–	
12041	X	HFC	M	1	U	–	–	–	
12050	X	1.0 III	M	5	U	–	–	–	PCB
12055	X	1.0 III 1.0 IV	M	100 22	U	– –	– –	– –	PCB
12056	X	0.64	F	6	U	–	–	–	
12057	X	2.3 II	F	4	S	12440*	12590	L,Y	
12058	X	4.8 8.0	F	1 2	S	12480 12500	– –	Y Y	
12059	X	1.0 III	M	7	U	12670*	–	L	
12060	X	1.0 III	F	7	U	12690*	–	L	
12061	X	1.0 III	M	8	U	–	–	–	PCB
12062	X	1.0 III	M	2	U	12670*	–	L	
12063	X	1.0 III	F	2	U	12690*	–	L	
12064	X	1.0 III	M	6	U	–	–	–	PCB
12067	X	1.0 III	F	6	U	12690*	–	L	
12068	X	8.0	F	2	S	12500	–	Y	
12070	X	2.3 II	F	24	U	12340*	–	L,Y	
12071	X	2.3 II	F	32	U	12340*	–	L,Y	
12079	X	B TO J	F	24	U	–	–	–	
12080	X	1.0 III	F	8	S	12720*	–	L	
12081	X	1.0 III	M	29	U	12670*	–	L	
12082	X	1.0 III	F	14	U	12690*	–	L	
12087	X	1.0 III	M	20	U	–	–	–	PCB
12088	O	2.3 II	F	2	U	12340*	–	L,Y	
12089	X	2.3 II	F	2	U	12340*	–	L,Y	
12090	X	2.3 II	F	12	U	12340*	–	L,Y	
12091	X	1.0 III	F	8	U	12690*	–	L	
12092	O	0.64 1.0 IV	F	5 2	U	– 12740	– –	– L	
12093	X	1.0 III	M	16	U	–	–	–	PCB
12094	X	1.0 III	F	16	U	12690*	–	L	

HOUSING PART NUMBER LIST

Part No. of Connector Body	Supply	Terminal	Male Female	Cav. No.	Sealing Ability	Part No. of Repair Wire		Sleeve Color	Memo
						160 mm Type	500 mm Type		
90980–12095	X	M6 NUT	F	3	S	82998– –	82998– –	–	
12096	X	1.0 III 2.3 II	F	12 20	U	12690* 12340*	– –	L L,Y	
12101	X	2.3 II	F	16	U	12340*	–	L,Y	
12102	X	2.3 II	F	28	U	12340*	–	L,Y	
12104	X	2.3 II	F	16	U	12340*	–	L,Y	
12105	X	2.3 II	M	16	U	12330*	–	L,Y	
12106	X	2.3 II	F	20	U	12340*	–	L,Y	
12108	X	2.3 II	M	18	U	–	–	–	PCB
12109	X	PAI 1	F	2	U	–	–	–	
12110	X	VALVE	F	2	U	–	–	–	
12111	X	VALVE	F	2	U	–	–	–	
12112	X	1.0 III	M	8	U	–	–	–	PCB
12113	X	1.0 III	F	8	U	12690*	–	L	
12114	X	1.0 III 2.3 II	F	6 28	U	12690* 12340*	– –	L L,Y	
12116	O	4.8 1.0 III	F	4 20	S	12480 12720*	– –	Y L	
12117	X	2.3 II	F	2	S	–	12790*	L,Y	
12118	X	8.0	M	2	U	–	–	–	PCB
12119	X	8.0	M	2	U	–	–	–	PCB
12120	X	8.0	F	2	U	12400	–	Y	
12122	X	1.0 III 2.3 II	F	6 12	U	12690* 12340*	– –	L L,Y	
12123	X	1.0 III	M	4	U	12670*	–	L	
12125	X	LA	F	1	S	–	–	–	
12129	X	LA	F	1	S	–	–	–	
12131	X	BUS–BAR	M	3	S	–	–	–	
12134	X	1.0 III	M	10	U	–	–	–	PCB
12135	X	1.0 III	F	10	U	12690*	–	L	
12136	X	LA	F	1	S	–	–	–	
12137	X	1.0 III 2.3 II	M	14 6	U	– –	– –	– –	PCB
12138	O	PAI 1	F	2	U	–	–	–	
12140	X	1.0 II 1.8 II	M	48 16	U	– –	– –	– –	PCB
12141	X	0.64 1.0 IV	M	133 34	U	– –	– –	– –	PCB

HOUSING PART NUMBER LIST

Part No. of Connector Body	Supply	Terminal	Male Female	Cav. No.	Sealing Ability	Part No. of Repair Wire		Sleeve Color	Memo
						160 mm Type	500 mm Type		
90980–						82998–	82998–		
12142	X	0.64	F	24	U	12750*	–	L	
		1.0 IV		7		12740	–	L	
12143	X	0.64	F	25	U	12750*	–	L	
		1.0 IV		7		12740	–	L	
12144	X	0.64	F	27	U	12750*	–	L	
		1.0 IV		7		12740	–	L	
12145	X	0.64	F	28	U	12750*	–	L	
		1.0 IV		7		12740	–	L	
12146	X	0.64	F	29	U	12750*	–	L	
		1.0 IV		6		12740	–	L	
12147	X	0.64	M	68	U	–	–	–	PCB
		2.3 II		12		–	–	–	
12148	X	0.64	M	40	U	–	–	–	PCB
		2.3 II		10		–	–	–	
12149	X	0.64	F	20	U	12750*	–	L	
		2.3 II		4		12340*	–	L,Y	
12150	X	0.64	F	20	U	12750*	–	L	
		2.3 II		6		12340*	–	L,Y	
12151	X	0.64	F	28	U	12750*	–	L	
		2.3 II		2		12340*	–	L,Y	
12152	X	0.64	M	32	U	–	–	–	PCB
12153	X	0.64	F	32	U	12750*	–	L	
12155	X	0.64	F	16	U	12750*	–	L	
12156	X	0.64	F	16	U	12770	–	L	IDC
12157	X	0.64	M	16	U	–	–	–	PCB
12159	X	1.0 III	M	4	U	12670*	–	L	
12160	X	1.0 III	F	4	U	12690*	–	L	
12161	X	1.0 III	M	8	U	12670*	–	L	
		2.3 II		9		12330*	–	L,Y	
12162	X	1.0 III	F	10	U	12690*	–	L	
12163	X	2.3 II	M	8	S	12430*	–	L,Y	
12164	X	2.3 II	F	8	S	12440*	12590	L,Y	
12165	O	–	–	–	–	–	–	–	
12166	X	1.0 III	F	14	U	12690*	–	L	
		2.3 II		6		12340*	–	L,Y	
12167	X	1.0 III	M	8	U	–	–	–	PCB
12168	X	1.0 III	F	3	S	12720*	–	L	
12169	X	0.64	F	40	U	12750*	–	L	
12170	X	0.64	F	40	U	12770	–	L	IDC

HOUSING PART NUMBER LIST

Part No. of Connector Body	Supply	Terminal	Male Female	Cav. No.	Sealing Ability	Part No. of Repair Wire		Sleeve Color	Memo
						160 mm Type	500 mm Type		
90980–12171	X	0.64	M	40	U	82998––	82998––	–	PCB
12174	X	1.0 II	F	18	U	24020*	–	L	IDC
12176	O	2.3 II	F	4	S	–	12790*	L,Y	
12177	X	2.3 II	M	4	S	–	–	L,Y	
12179	X	1.0 III 2.3 II	F	42 4	U	12690* 12340*	– –	L L,Y	
12182	X	0.64	M	12	U	–	–	–	PCB
12183	X	0.64	F	12	U	12750*	–	L	
12184	X	1.0 III 2.3 II	F	30 12	U	12690* 12340*	– –	L L,Y	
12188	X	2.3 II	F	2	S	12440*	12590	L,Y	
12189	X	1.0 III	M	5	U	12670*	–	L	
12190	X	1.0 III	F	5	U	12690*	–	L	
12191	X	PAI 1	F	2	U	–	–	–	
12192	X	0.64	M	16	U	–	–	–	
12193	X	0.64	M	24	U	–	–	–	
12194	X	1.0 III	M	2	S	12710	–	L	
12195	X	1.0 III	F	2	S	12720*	–	L	
12196	X	D–3	M	3	U	–	–	–	
12197	X	D–3	F	3	U	–	–	–	
12198	X	D–3	M	6	U	–	–	–	
12199	X	D–3	F	6	U	–	–	–	
12200	X	0.64	F	24	U	12750*	–	L	
12202	X	0.64 2.3 II	M	20 6	U	– –	– –	– –	PCB
12203	X	0.64 2.3 II	F	20 6	U	12750* 12340*	– –	L L,Y	
12204	X	1.0 III	M	6	U	12670*	–	L	
12205	X	2.3 II	M	12	U	–	–	–	PCB
12206	X	2.3 II	M	16	U	–	–	–	PCB
12207	X	1.0 III 2.3 II	M	26 8	U	– –	– –	– –	PCB
12208	X	1.0 III	M	6	U	–	–	–	PCB
12209	O	1.0 III	F	6	U	12690*	–	L	
12210	X	1.0 III	M	4	U	–	–	–	PCB
12211	O	1.0 III	F	4	U	12690*	–	L	
12212	X	1.0 III	M	4	U	12670*	–	L	
12213	X	0.64	M	40	U	–	–	–	PCB
12214	X	0.64	M	24	U	–	–	–	PCB

HOUSING PART NUMBER LIST

Part No. of Connector Body	Supply	Terminal	Male Female	Cav. No.	Sealing Ability	Part No. of Repair Wire		Sleeve Color	Memo
						160 mm Type	500 mm Type		
90980–12215	X	0.64	M	24	U	82998––	82998––	–	PCB
12216	X	0.64	M	8	U	–	–	–	PCB
12217	X	0.64	F	8	U	12750*	–	L	
12218	X	PAI 1	M	2	U	–	–	–	
12219	X	PAI 1	F	2	U	–	–	–	
12220	X	0.64	M	8	U	–	–	–	PCB
12221	X	0.64	F	8	U	12750*	–	L	
12222	X	0.64	F	12	U	12750*	–	L	
12223	X	PAI 1	M	2	U	–	–	–	
12224	X	PAI 1	F	2	U	–	–	–	
12225	X	0.64	F	4	U	12750*	–	L	Splash Proof
12226	X	1.0 III 2.3 II	F	6 4	U	12690* 12340*	– –	L L,Y	
12227	X	9.5	M	3	S	–	–	–	
12228	X	9.5	F	3	S	–	–	–	
12230	X	LA	F	1	S	–	–	–	
12231	X	LA	F	1	S	–	–	–	
12232	X	0.64 1.0 IV	M	108 27	U	– –	– –	– –	PCB
12233	X	0.64 2.3 II	M	20 6	U	– –	– –	– –	PCB
12234	X	4.8	M	3	S	12470	–	Y	
12237	X	4.8	F	3	S	12480	–	Y	
12241	X	0.64	F	2	U	12750*	–	L	Splash Proof
12242	X	PAI 1	F	2	U	–	–	–	
12243	X	PAI 1	F	2	U	–	–	–	
12249	X	2.3 II	M	10	U	12330*	–	L,Y	
12250	X	0.64	M	11	U	–	–	–	
12251	X	0.64	F	11	U	12750*	–	L	
12252	X	0.64	M	16	U	–	–	–	
12253	O	PAI 1	F	2	U	–	–	–	
12258	X	0.64	M	20	U	–	–	–	PCB
12259	X	0.64	F	20	U	12750*	–	L	
12260	X	0.64	M	24	U	–	–	–	PCB
12269	X	0.64	M	12	U	–	–	–	PCB
12270	X	0.64	M	24	U	–	–	–	PCB
12271	X	1.0 III 2.3 II	F	20 6	U	12690* 12340*	– –	L L,Y	
12272	X	1.0 III	F	10	U	12690*	–	L	

HOUSING PART NUMBER LIST

Part No. of Connector Body	Supply	Terminal	Male Female	Cav. No.	Sealing Ability	Part No. of Repair Wire		Sleeve Color	Memo
						160 mm Type	500 mm Type		
90980–						82998–	82998–		
12273	X	1.0 III	F	6	U	12690*	–	L	
		2.3 II		6		12340*	–	L,Y	
12274	X	1.0 III	F	18	U	12690*	–	L	
		2.3 II		18		12340*	–	L,Y	
12275	X	1.0 III	F	8	U	12690*	–	L	
		2.3 II		24		12340*	–	L,Y	
12276	X	1.0 III	F	24	U	12690*	–	L	
		2.3 II		14		12340*	–	L,Y	
12277	X	1.0 III	F	10	U	12690*	–	L	
		2.3 II		20		12340*	–	L,Y	
12278	X	4.8	F	1	U	12380	–	Y	
		1.0 III		6		12690*	–	L	
		2.3 II		18		12340*	–	L,Y	
12291	X	1.0 III	M	39	U	–	–	–	PCB
12296	X	0.64	F	3	U	12750*	–	L	

Repair Wire (Waterproof Type)

Type	**1.0II**	
	Male	Female
		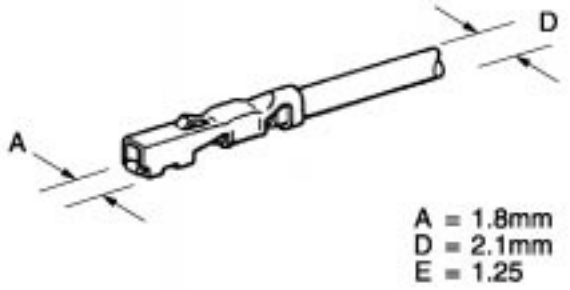
P/N		82998–24060
Type	**1.0III**	
	Male	Female
	Sleeve : Medium (Blue) 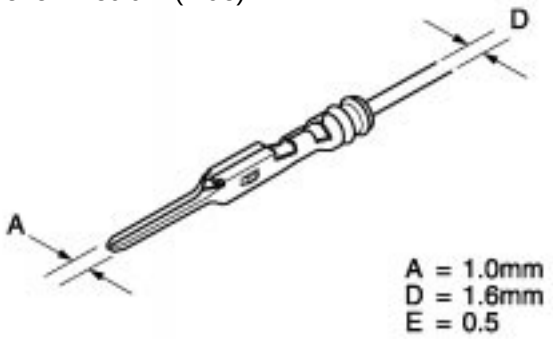	**Sleeve** : Medium (Blue) 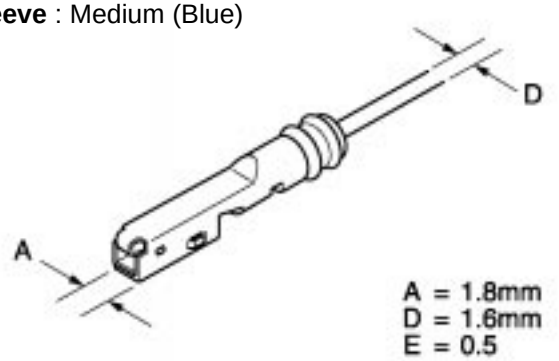
P/N	82998–12710	82998–12720 82998–12730*
Type	**1.3**	
	Male	Female
	Sleeve : Medium (Blue) 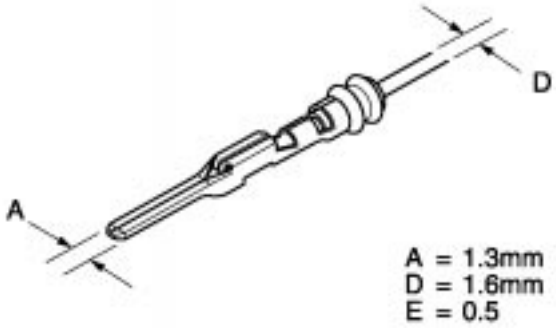	**Sleeve** : Medium (Blue) 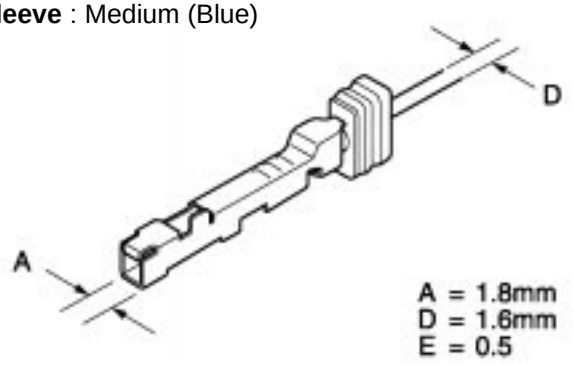
P/N	82998–12630	82998–12650

F

Repair Wire (Waterproof Type)

Type	1.8	
	Male	Female
		Sleeve : Medium (Blue) 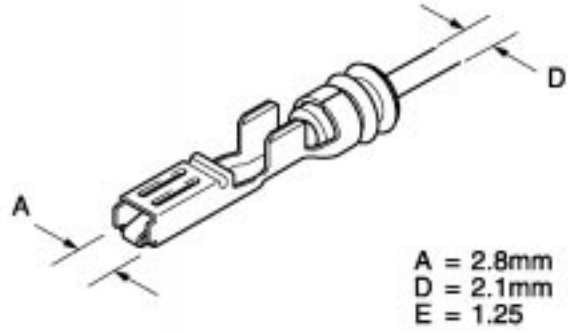
P/N		82998–12620
Type	**2.3**	
	Male	Female
	Sleeve : Medium (Blue) 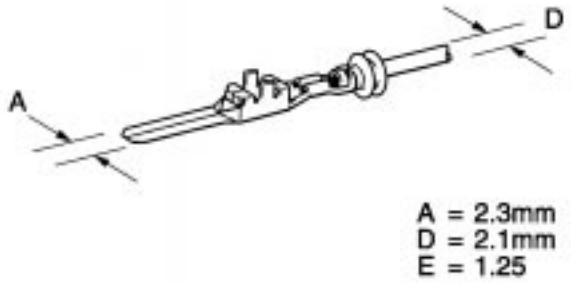	**Sleeve** : Medium (Blue) 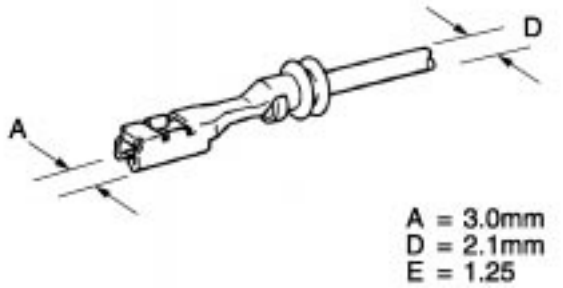
P/N	82998–12260 82998–24070*	82998–12270(160mm) 82998–12600(500mm) 82998–24080*
Type	**2.3II (6mm Pitch Type)**	
	Male	Female
	Sleeve : Medium (Blue) or Large (Yellow) 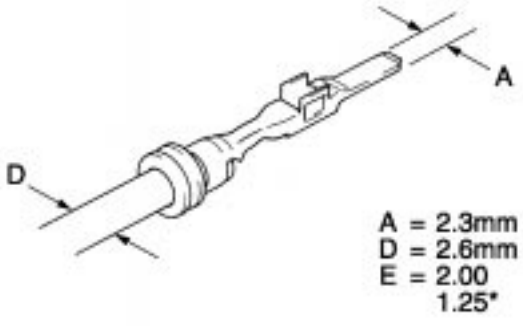	**Sleeve** : Medium (Blue) or Large (Yellow) 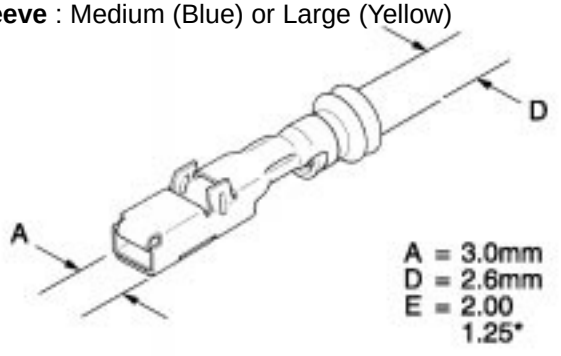
P/N	82998–12430 82998–12450*	82998–12440(160mm) 82998–12590(500mm) 82998–12460*

Repair Wire (Waterproof Type)

Type	2.3II (5mm Pitch Type)	
	Male	Female
		Sleeve : Medium (Blue) or Large (Yellow) 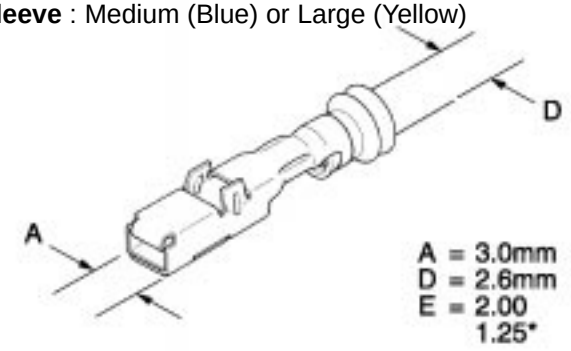
P/N		82998–12790 82998–12780*
Type	4.8	
	Male	Female
	Sleeve : Large (Yellow) 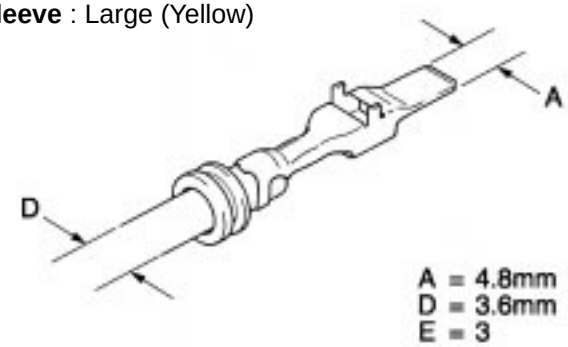	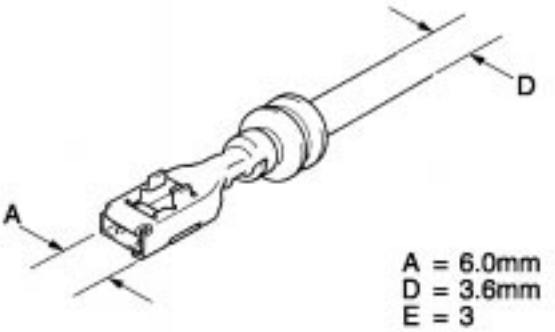
P/N	82998–12470	82998–12480
Type	6.3	
	Male	Female
		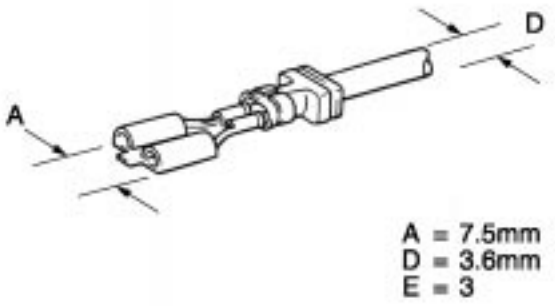
P/N		82998–12540

Repair Wire (Waterproof Type)

Type	6.3II	
	Male	Female
		Sleeve : Medium (Blue) 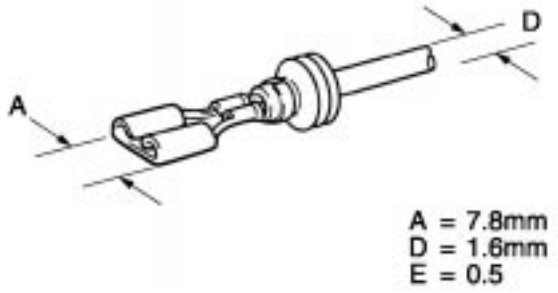
P/N		82998–24160
Type	8.0	
	Male	Female
	Sleeve : Large (Yellow) 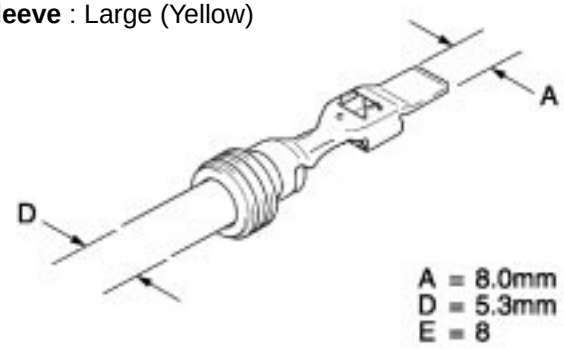	**Sleeve** : Large (Yellow) 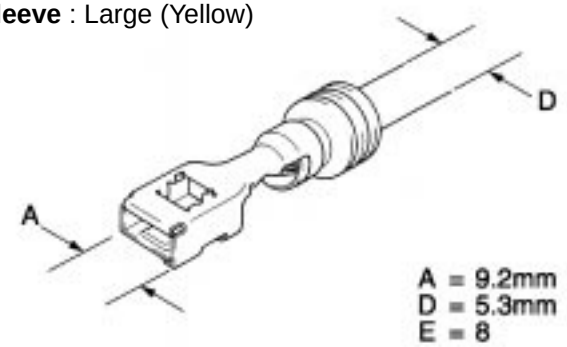
P/N	82998–12490	82998–12500
Type	HEAD LAMP	
	Male	Female
		Sleeve : Medium (Blue) or Large (Yellow) 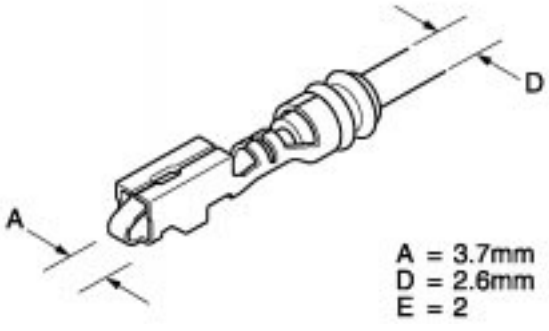
P/N		82998–24150(160mm) 82998–24190(500mm)

F

Repair Wire (Waterproof Type)

Type	HB3, HB4	
	Male	Female
		Sleeve : Medium (Blue) or Large (Yellow) 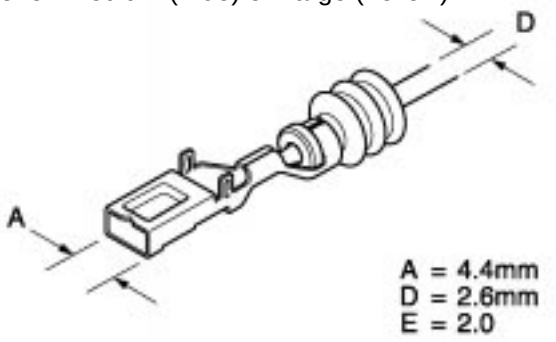
P/N		82998–12550(160mm) 82998–12610(500mm)
Type	**TLC**	
	Male	Female
	Sleeve : Small (Red) 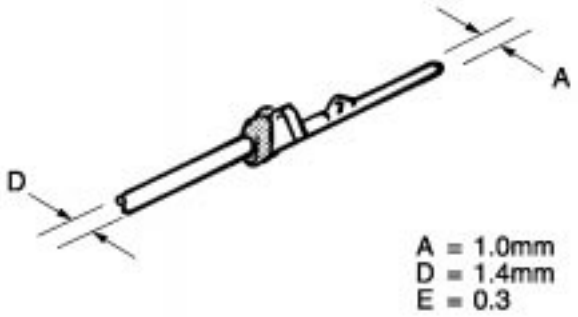	**Sleeve** : Small (Red) 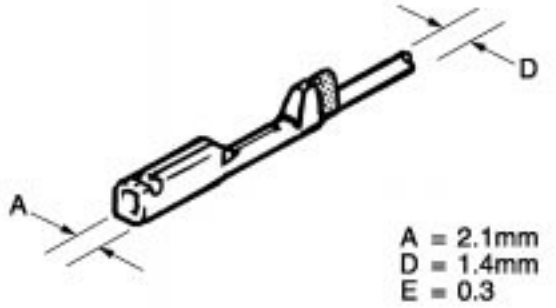
P/N	82998–12280	82998–12290

F

Repair Wire (Non–waterproof Type)

Type	0.64	
	Male	Female
		Sleeve : Medium (Blue) 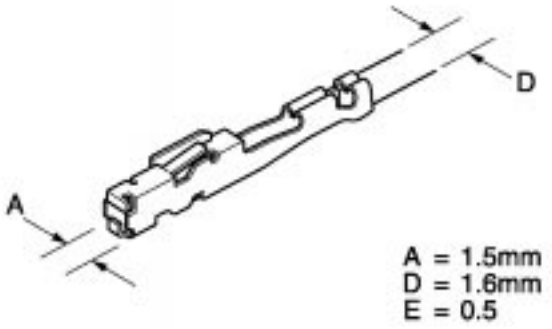
P/N		82998–12750 82998–12760*
Type	**0.64 IDC**	
	Male	Female
		Sleeve : Medium (Blue) 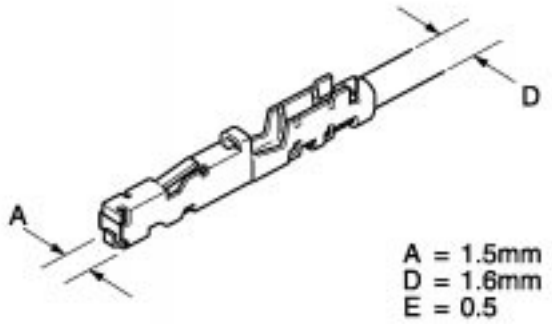
P/N		82998–12770
Type	**1.0**	
	Male	Female
		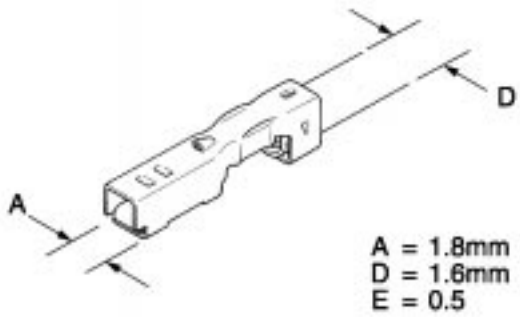
P/N		82998–12310 82998–12320*

F

Repair Wire (Non–waterproof Type)

Type	1.0II	
	Male	Female
	Sleeve : Medium (Blue) 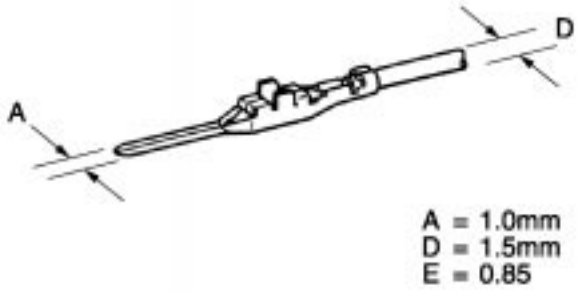	**Sleeve** : Medium (Blue) **Size : S** 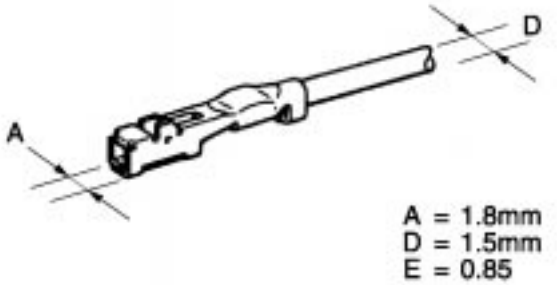
P/N	82998–24010	82998–24020 82998–24110*
Type	1.0II	
	Male	Female
		Sleeve : Medium (Blue) **Size : M** 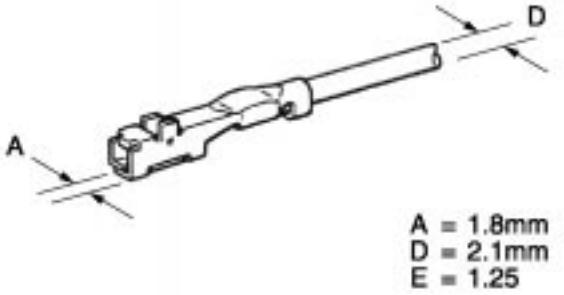
P/N		82998–24120*
Type	1.0III	
	Male	Female
	Sleeve : Medium (Blue) 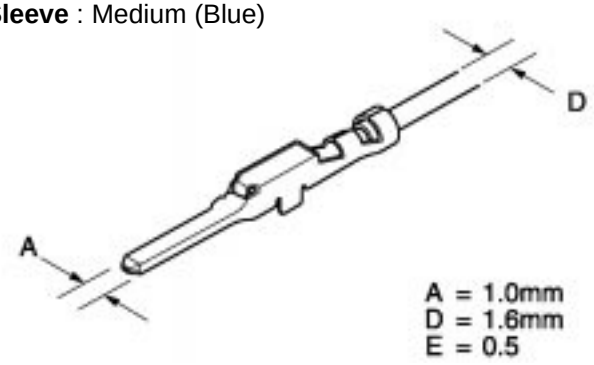	**Sleeve** : Medium (Blue) 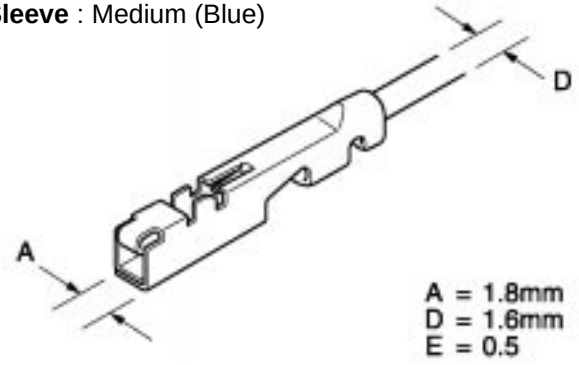
P/N	82998–12670 82998–12680*	82998–12690 82998–12700*

F

Repair Wire (Non–waterproof Type)

Type	1.0III IDC	
	Male	Female
	Sleeve : Medium (Blue) 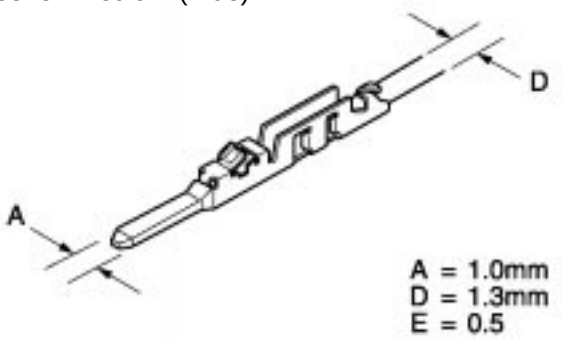	**Sleeve** : Medium (Blue) 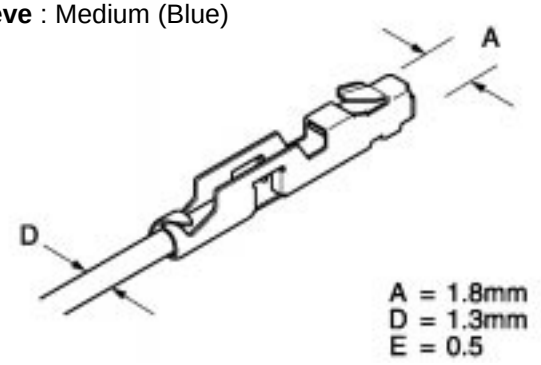
P/N	82998–12660	82998–12640
Type	**1.0IV**	
	Male	Female
		Sleeve : Medium (Blue) 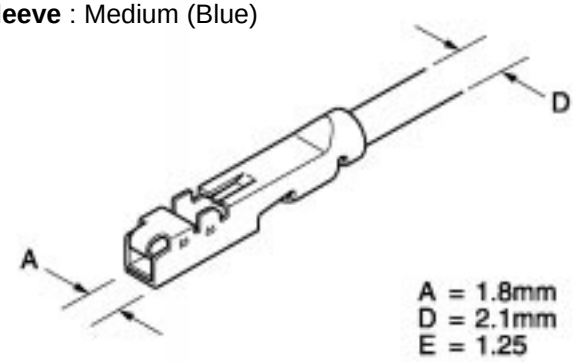
P/N		82998–12740
Type	**1.3**	
	Male	Female
	Sleeve : Medium (Blue) 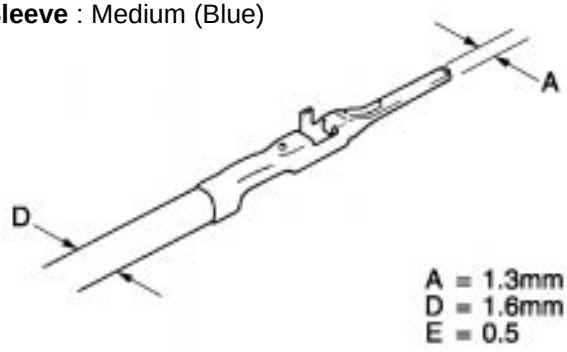	**Sleeve** : Medium (Blue) 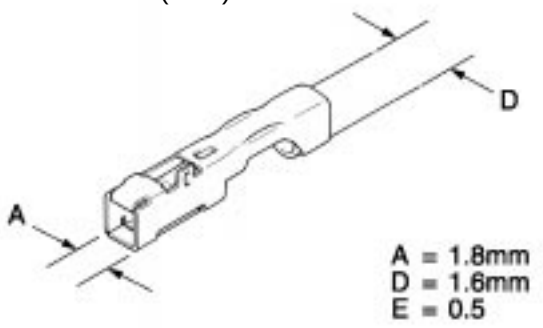
P/N	82998–12410	82998–12420

F

Repair Wire (Non–waterproof Type)

Type	1.8	
	Male	Female
	Sleeve : Medium (Blue) 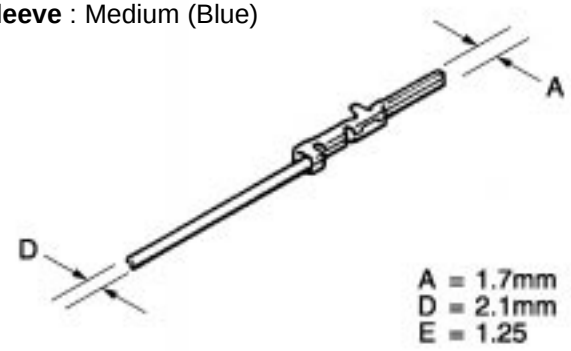	**Sleeve** : Medium (Blue) 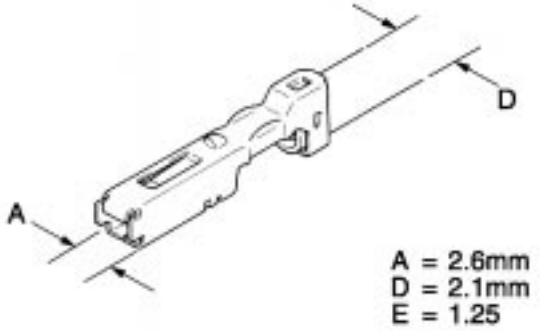
P/N	82998–12180	82998–12190 82998–12300*
Type	**1.8II**	
	Male	Female
	Sleeve : Medium (Blue) or Large (Yellow) **Size : S, M** 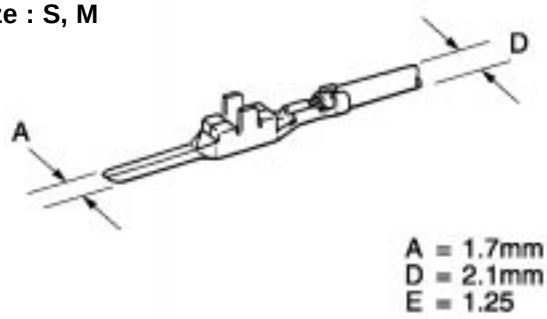	**Sleeve** : Medium (Blue) or Large (Yellow) **Size : S, M** 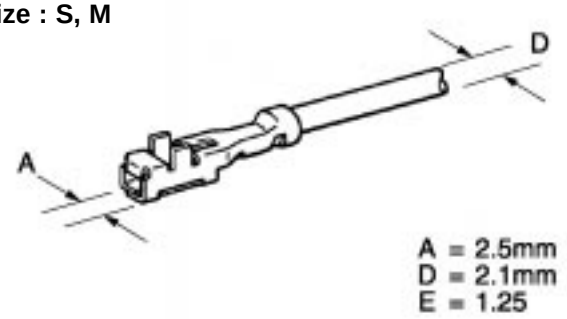
P/N	82998–24090 82998–24130*	82998–24100
Type	**1.8II**	
	Male	Female
	Sleeve : Medium (Blue) or Large (Yellow) **Size : L** 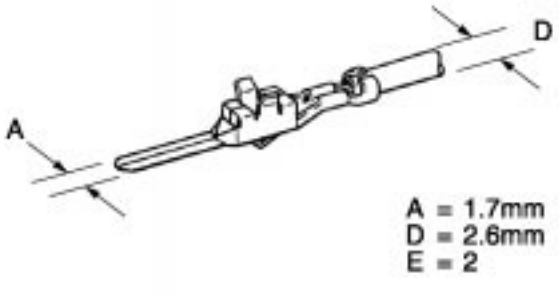	**Sleeve** : Medium (Blue) or Large (Yellow) **Size : L** 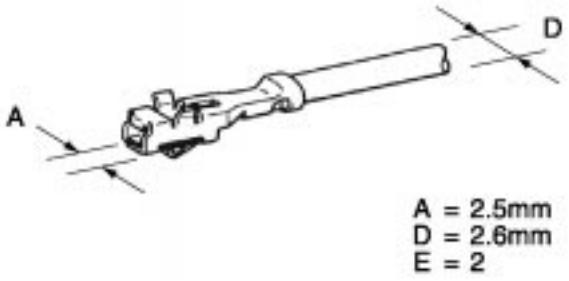
P/N	82998–24030	82998–24040

F

Repair Wire (Non–waterproof Type)

Type	2.3	
	Male	Female
	Sleeve : Medium (Blue) 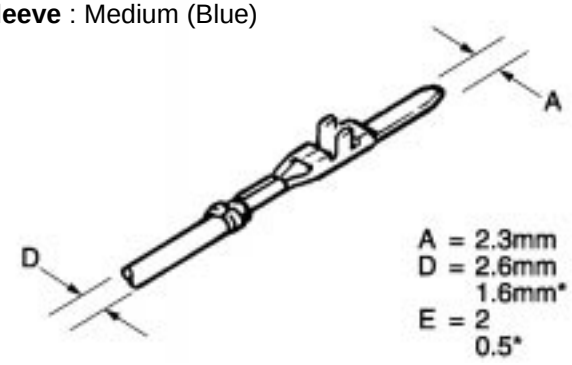	**Sleeve** : Medium (Blue) 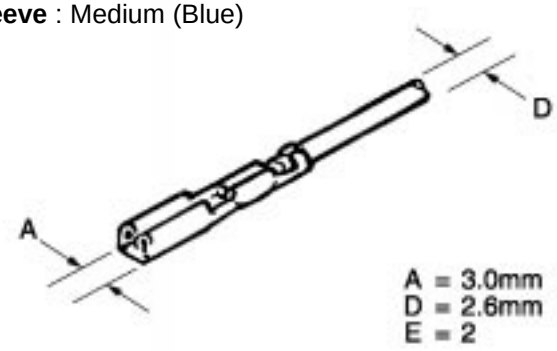
P/N	82998–12160 82998–24050*	82998–12170
Type	**2.3II**	
	Male	Female
	Sleeve : Medium (Blue) or Large (Yellow) 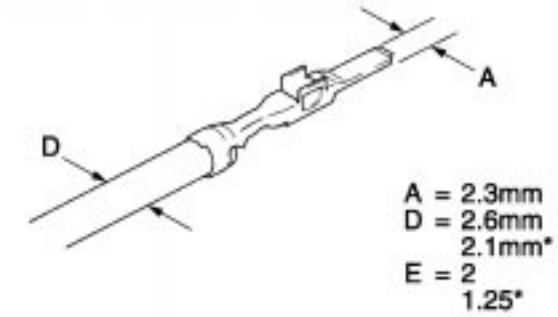	**Sleeve** : Medium (Blue) or Large (Yellow) 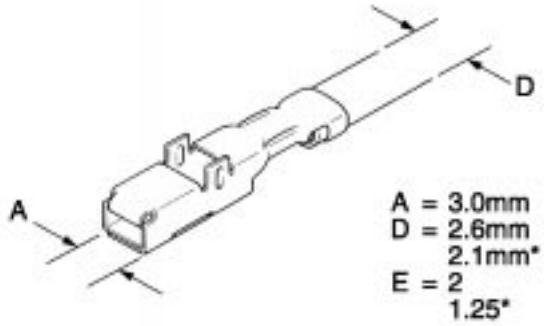
P/N	82998–12330 82998–12350*	82998–12340 82998–12360*
Type	**2.3II IDC**	
	Male	Female
		Sleeve : Medium (Blue) 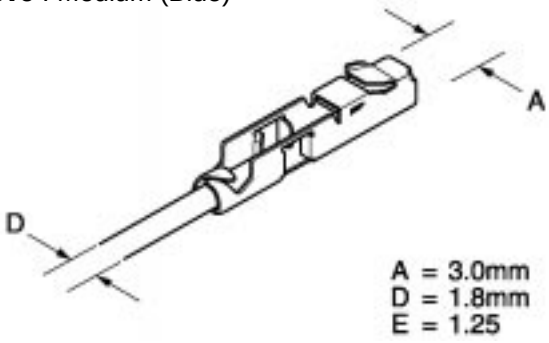
P/N		82998–24220

Repair Wire (Non–waterproof Type)

Type	4.8	
	Male	Female
	Sleeve : Large (Yellow) 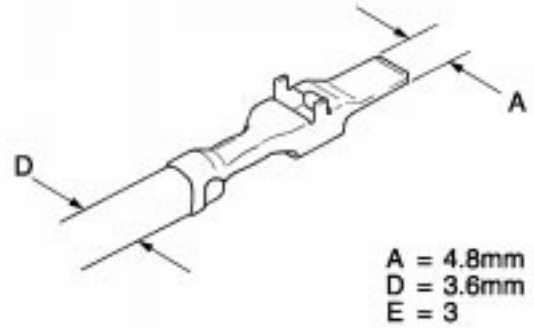	**Sleeve** : Large (Yellow) 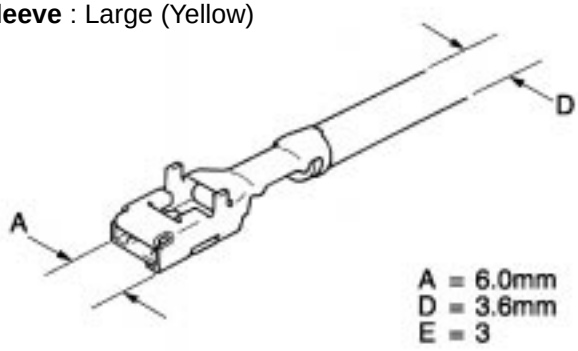
P/N	82998–12370	82998–12380
Type	**6.3**	
	Male	Female
	Sleeve : Large (Yellow) 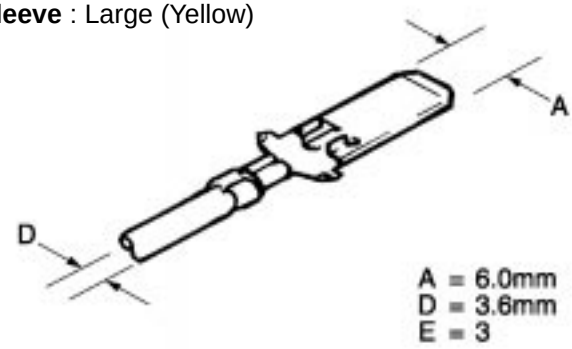	**Sleeve** : Large (Yellow) 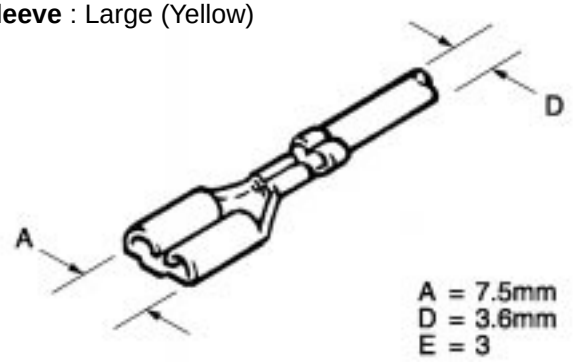
P/N	82998–12050	82998–12060(160mm) 82998–12580(500mm)
Type	**6.3**	
	Male	Female
		Sleeve : Large (Yellow) 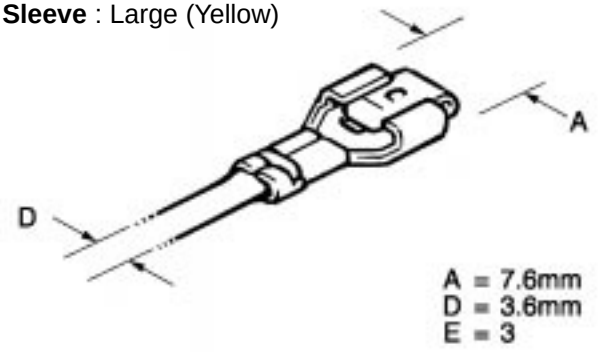
P/N		82998–12070

Repair Wire (Non–waterproof Type)

Type	6.3II	
	Male	Female
		Sleeve : Large (Yellow) 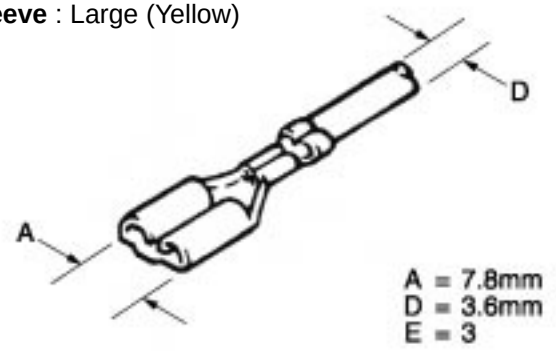
P/N		82998–24170
Type	**7.7 Terminal Lance**	
	Male	Female
	Sleeve : Large (Yellow) 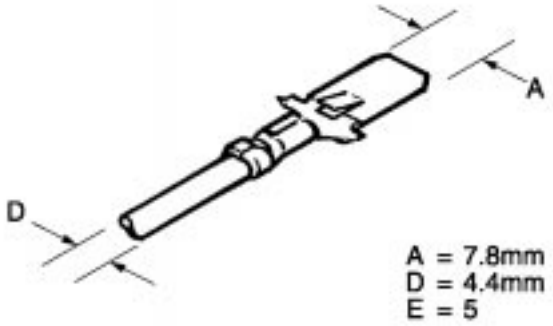	**Sleeve** : Large (Yellow) 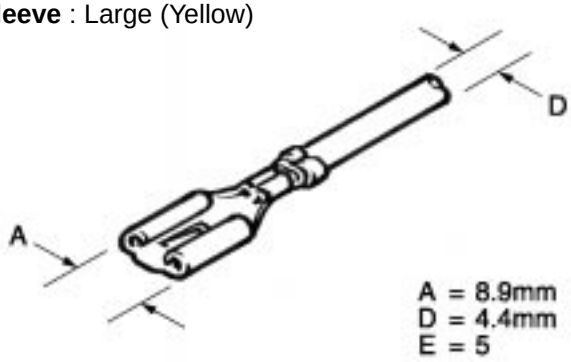
P/N	82998–12010	82998–12020
Type	**7.7 Housing Lance**	
	Male	Female
	Sleeve : Large (Yellow) 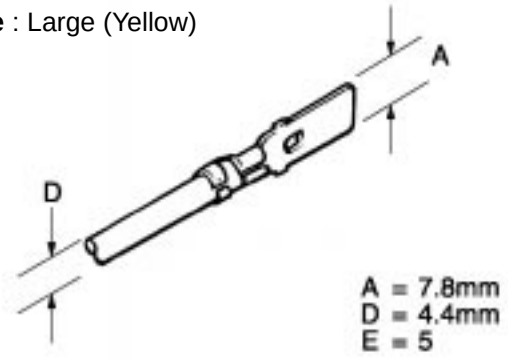	**Sleeve** : Large (Yellow) 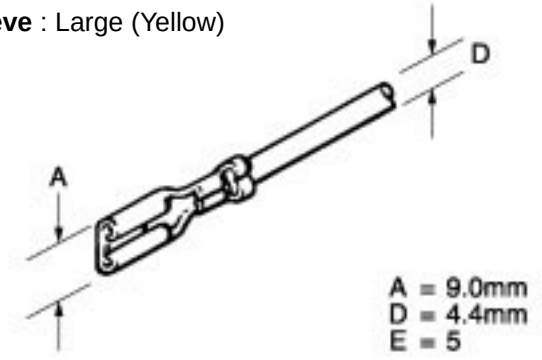
P/N	82998–12030	82998–12040

Repair Wire (Non–waterproof Type)

Type	8.0	
	Male	Female
	Sleeve : Large (Yellow) 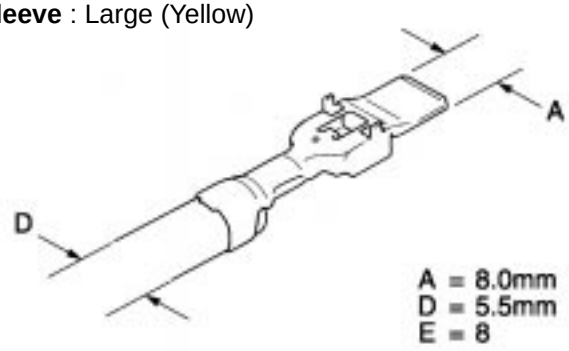	**Sleeve** : Large (Yellow) 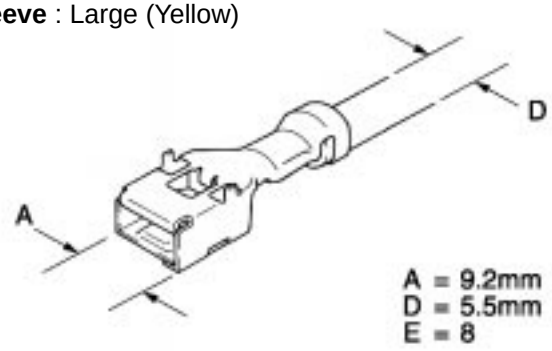
P/N	82998–12390	82998–12400
Type	**BLADE FUSE**	
	Male	Female
		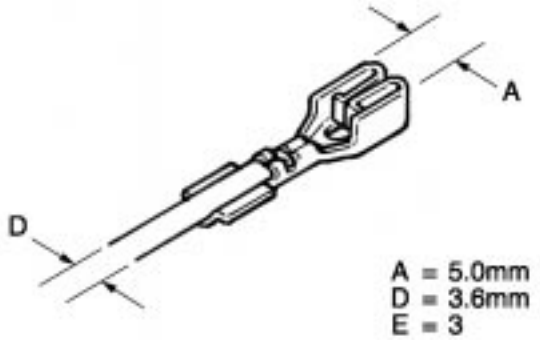
P/N		82998–12140
Type	**C–Type**	
	Male	Female
	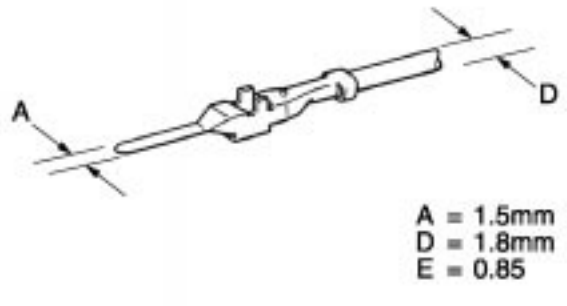	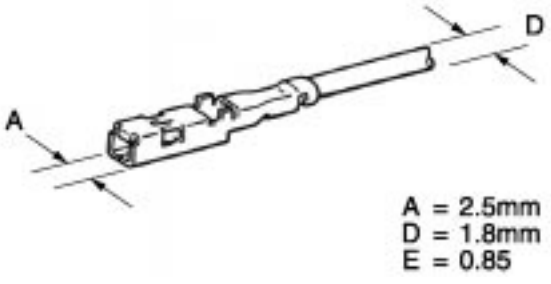
P/N	82998–12560	82998–12570

Repair Wire (Non–waterproof Type)

Type	FOG–LP	
	Male	Female
		Sleeve : Medium (Blue) or Large (Yellow) 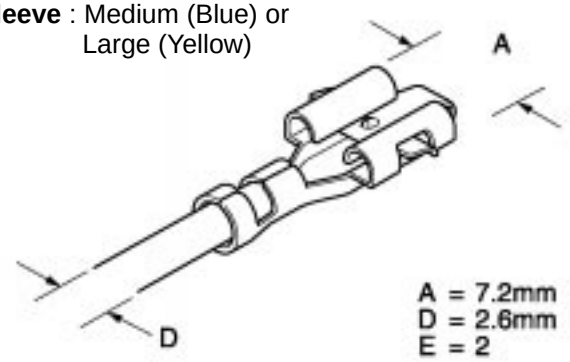
P/N		82998–24210
Type	**FTC**	
	Male	Female
		Sleeve : Medium (Blue) or Large (Yellow) 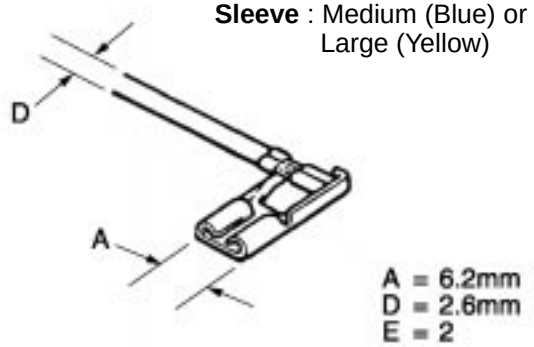
P/N		82998–12510
Type	**HEAD LAMP**	
	Male	Female
		Sleeve : Medium (Blue) or Large (Yellow) 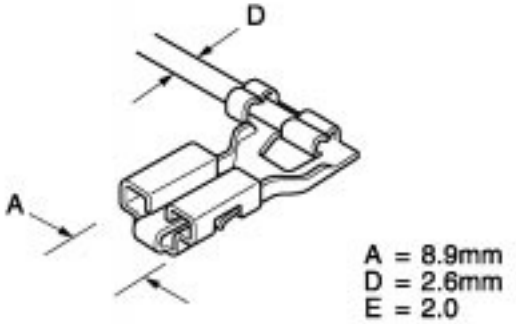
P/N		82998–24140(160mm) 82998–24200(500mm)

Repair Wire (Non–waterproof Type)

Type	LAC	
	Male	Female
	Sleeve : Medium (Blue) or Large (Yellow) 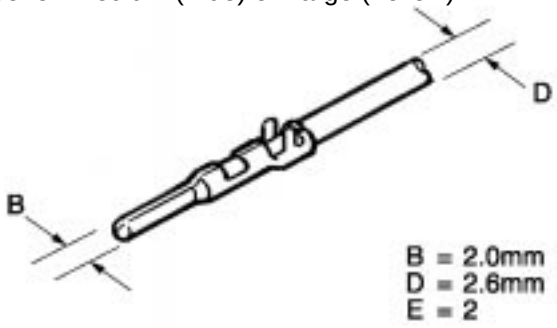	**Sleeve** : Medium (Blue) or Large (Yellow) 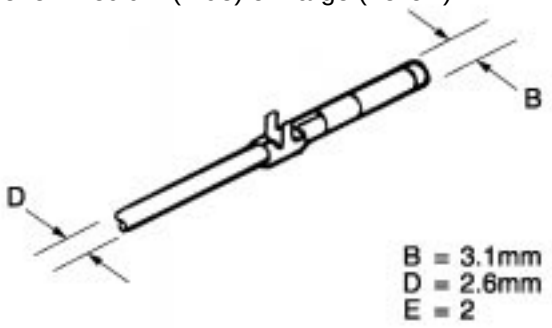
P/N	82998–12100	82998–12110
Type	**MFPC**	
	Male	Female
		Sleeve : Medium (Blue) 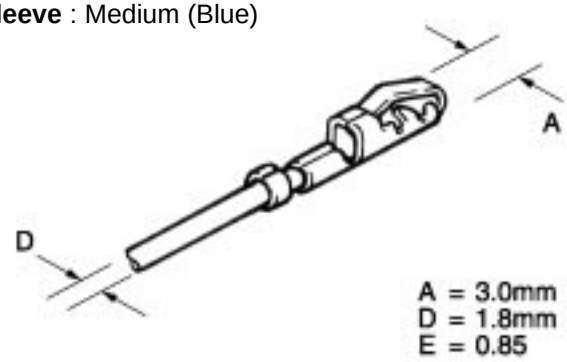
P/N		82998–12150
Type	**MIC**	
	Male	Female
		Sleeve : Medium (Blue) or Large (Yellow) 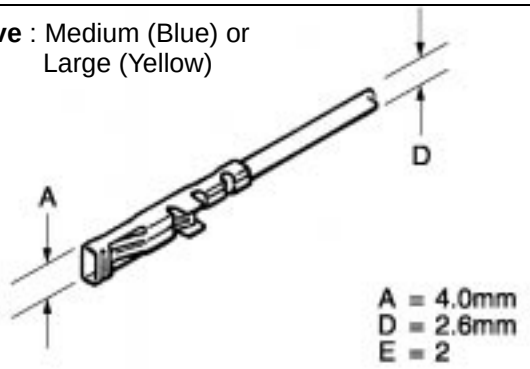
P/N		82998–12120

Repair Wire (Non–waterproof Type)

Type	PULSE LOCK	
	Female (Power)	Female (Signal)
	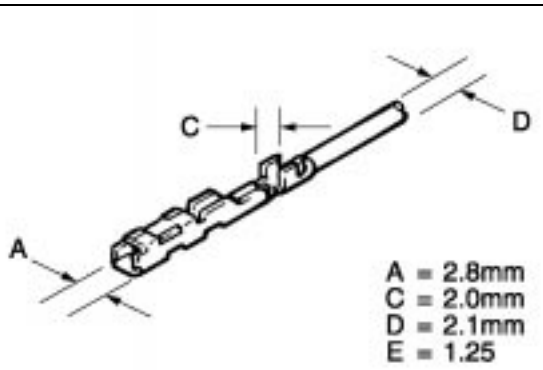	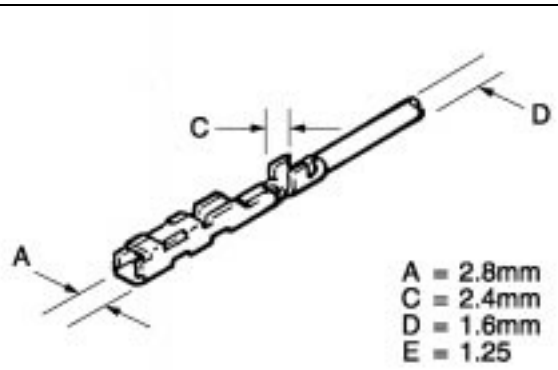
P/N	82998–12200	82998–12210
Type	SFPC	
	Male	Female
		Sleeve : Medium (Blue) 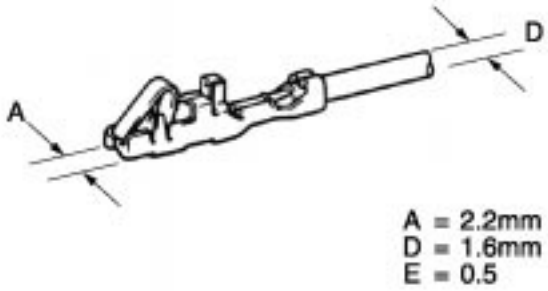
P/N		82998–24180
Type	SL	
	Male	Female
		Sleeve : Medium (Blue) or Large (Yellow) 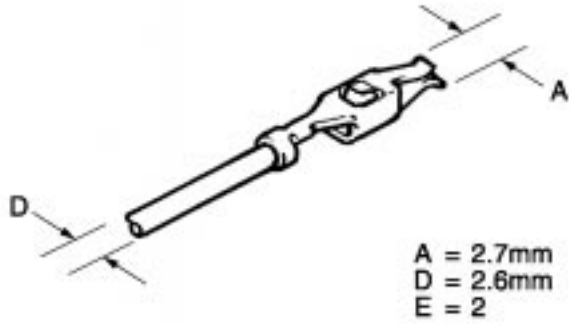
P/N		82998–12130

Repair Wire (Non–waterproof Type)

Type	**SP**	
	Female (Power)	Female (Signal)
	Sleeve : Medium (Blue) or Large (Yellow) 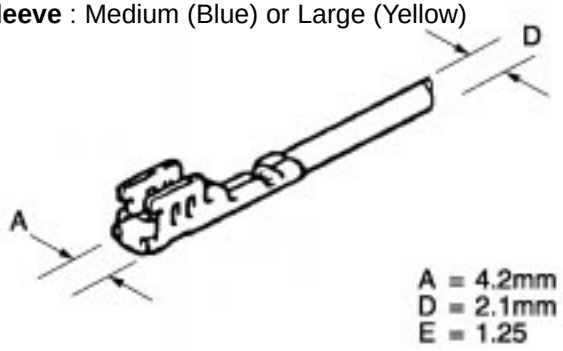	**Sleeve** : Medium (Blue) or Large (Yellow) 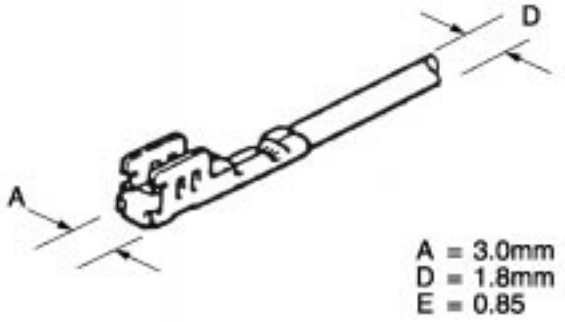
P/N	82998–12520	82998–12530
Type	**TLC**	
	Male	Female
	Sleeve : Medium (Blue) 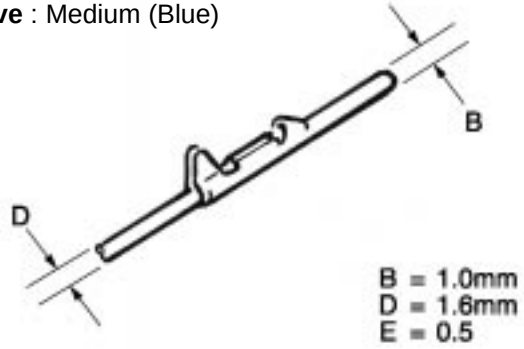	**Sleeve** : Medium (Blue) 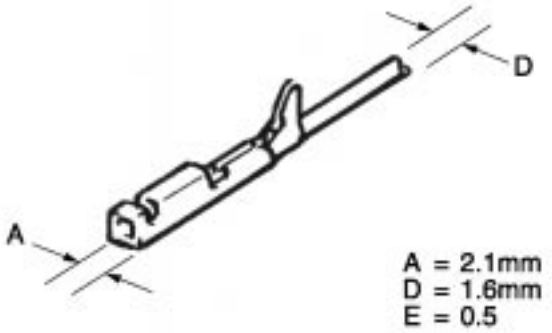
P/N	82998–12220	82998–12230
Type	**TNS**	
	Male	Female
	Sleeve : Medium (Blue) 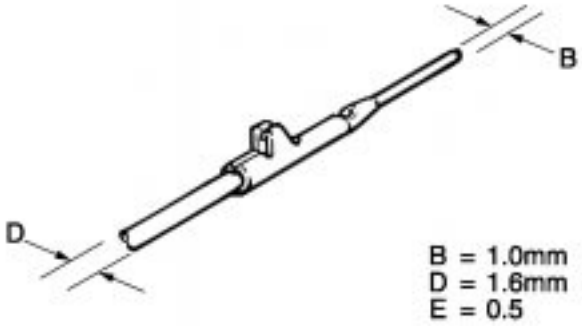	**Sleeve** : Medium (Blue) 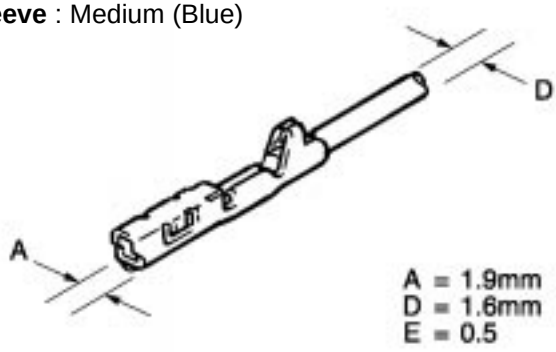
P/N	82998–12240	82998–12250

Repair Wire (Non–waterproof Type)

Type	TODC	
	Male	Female
	Sleeve : Medium (Blue) or Large (Yellow) 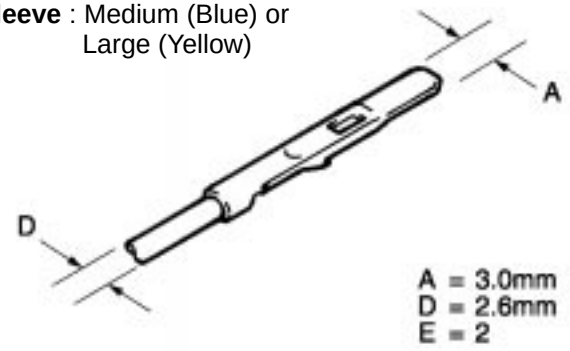	**Sleeve** : Medium (Blue) or Large (Yellow) 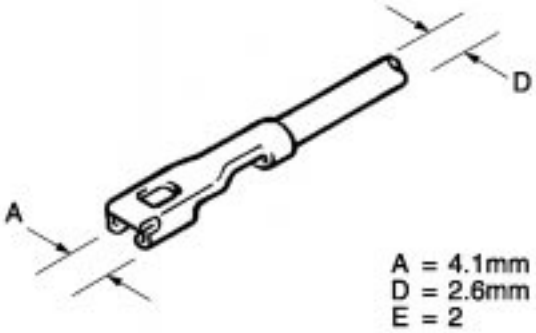
P/N	82998–12080	82998–12090

WIRE HARNESS REPAIR KIT WITH CASE (REFERENCE ONLY)

We would like to recommend to you use of the ”Wire Harness Repair Kit with the Case” according to your after service market demand.

Example:

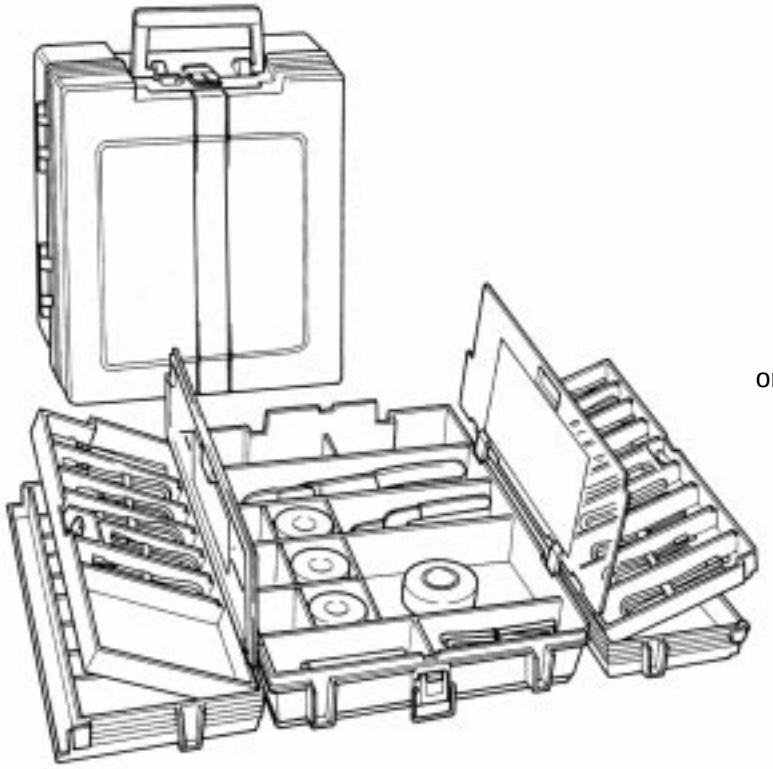

[portable type]

or



[stationary type]

Remark: This kind of kit is not available from Toyota Motor Corporation.

REPORTING OF WIRE HARNESS PROBLEM

It is more difficult to understand the cause of wire harness problems and to make production improvements, due to the number of wire harness routings and connectors and their wide scope of use.
The position of the problem occurrence and the problem cause will be very clear if you proceed with wire harness/connector repairs.
We request that when you perform repairs, you fill in the attached ”WIRE HARNESS/CONNECTOR PROBLEM CHECK SHEET” and send it to your distributor.
Toyota Motor Corporation will be able to make production improvements more quickly and surely based on the results of the above mentioned reports (Check Sheets).

WIRE HARNESS/CONNECTOR PROBLEM CHECK SHEET page 1/3

Please use the TOYOTA ELECTRICAL WIRING DIAGRAM (EWD) manual to answer this questionnaire accurately.

Dealer Name _____ Dealer Code _____

Full Model Code _____ Frame No. _____

P/D ____/____ km-reading/Mileage Date of Problem ____/____/____

Customer Complaint: _____

Electrical Component with Problem: _____

Condition: ☐ Intermittent operation ☐ Inoperative ☐ Others

Symptom: ☐ Short ☐ Open circuit ☐ Moisture

☐ Others (Eg.Rattle,Noise etc. - Please proceed to "Box B" on next page.)

CONNECTOR PROBLEM:

Please fill in the required information in the brackets and check the appropriate box.

EWD page ( )
CONNECTOR NO.( )

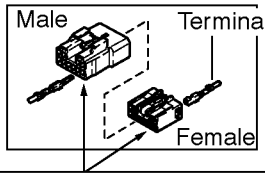

☐ TERMINAL
- ☐ Male ☐ Female

PIN No. ( )
WIRE COLOR ( )

☐ CONNECTOR BODY
- ☐ Male ☐ Female

☐ NOT CONNECTED/HALF CONNECTED
☐ BROKEN CONNECTOR
☐ BROKEN LOCKING CLIP OF CONNECTOR
☐ OTHERS ( )

☐ TERMINAL MISSING (Terminal Coming off)
☐ TERMINAL BROKEN
☐ TERMINAL BENT (Male)
☐ TERMINAL EXPANDED (Female)
☐ WIRE POORLY CRIMPED AT TERMINAL
☐ CORROSION, RUST, MOISTURE
☐ POOR CONTACT
☐ OTHERS ( )

☐ NON-WATERPROOF TYPE
☐ WATERPROOF TYPE
- WATER ENTERING FROM:
  - ☐ SEAL PACKING ☐ WIRE HARNESS
  - ☐ TERMINAL PACKING ☐ UNCLEAR, OTHERS

Please refer to Fig. 1

☐ BROKEN LOCKING CLIP OF CONNECTOR
☐ TERMINAL LOCKING CLIP MISSING
☐ TERMINAL RETAINER BROKEN
☐ SECONDARY LOCKING PLATE MISSING
☐ OTHERS; ( )

Fig.1

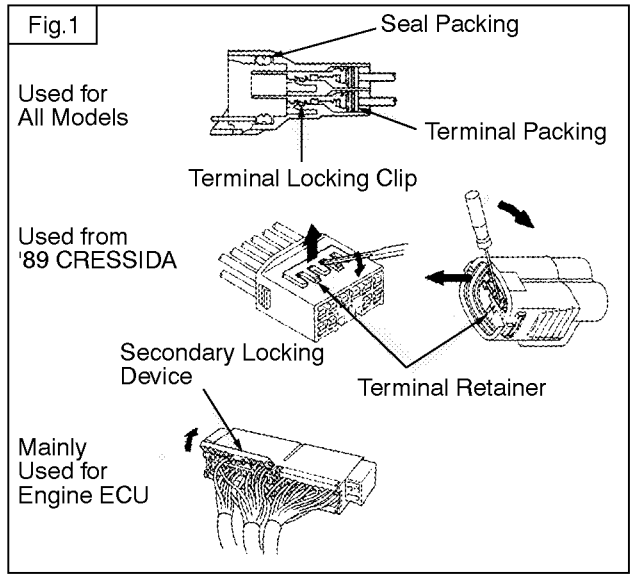

WIRE HARNESS PROBLEM:

page 2/3

Please fill in the required information in the brackets and check the appropriate box.

E.W.D Page ( )

Problem occurred between { *CONNECTOR NO.A ( ) / PIN NO. ( ) / WIRE COLOR ( ) } and { CONNECTOR NO.B ( ) / PIN NO. ( ) / WIRE COLOR ( ) }

* The problem indicated below occurred at a distance of (mm) from connector A ( )

☐ SHORT

☐ OPEN



☐ POOR CONTACT OF RING TYPE TERMINAL

☐ PINCHED
☐ INTERFERENCE/ABRATION
☐ MOISTURE
☐ CORROSION, RUST
☐ OTHERS;

☐ CUT WIRE
☐ SPLICE POINT
☐ OTHRES;

☐ EARTH TERMINAL
☐ POWER SOURCE TERMINAL
  ☐ BATTERY
  ☐ STARTER
  ☐ ALTERNATOR

Name of the other part which causef the short/open of wire

☐ BODY ☐ PART ☐ OTHERS — Name ( )

INSULATION:
☐ YES ☐ NO
  ☐ CONDUIT TUBE
  ☐ VINYL TUBE
  ☐ VINYL TAPE
  ☐ VINYL SHEET
  ☐ OTHERS ( )

☐ LOOSE SET BOLT
☐ CORROSION, RUST
☐ OTHERS ( )

G

Note: If possible, attach an illustration or photo to show the part causing the short or open, and the position of the wire and the other part.
This will help to make the cause of the problem clear and help us to take prompt action.

Box B

If you checked the "Others" box in the "Symptom" section on page 3-1, please describe:

Symptom: _____

Condition: _____

Related Wire Harness or Connector;

Name or Part NO.: _____

Location: _____

REPAIR:

page 3/3

1. Please identify repair method:

Troubleshooting methods

☐ WIRING DIAGRAM

☐ VOLTMETER: ANALOG _____ , DIGITAL _____

2. Please check one box and fill in prethesis:

☐ REPLACE WIRE HARNESS

☐ REPLACE CONNECTOR OR TERMINAL

☐ REPAIR TERMINAL

☐ OTHERS ( )

WIRE HARNESS TOOLS

☐ CRIMPING PLIERS

☐ PICK

☐ OTHERS ( )

☐ SOLDER CONNECTION

3. Please attach a copy of the TOYOTA ELECTRICAL WIRING DIAGRAM for the vehicle repaired:

Indicate the affected connector number by arrow, or circle and identify the affected wire harness.

EXAMPLE: COROLLA (ZZE 110)

Condition: Engine does not start

Cause: Connector pin backed out from female connector at clutch start switch

Component: Clutch start awitch inoperation

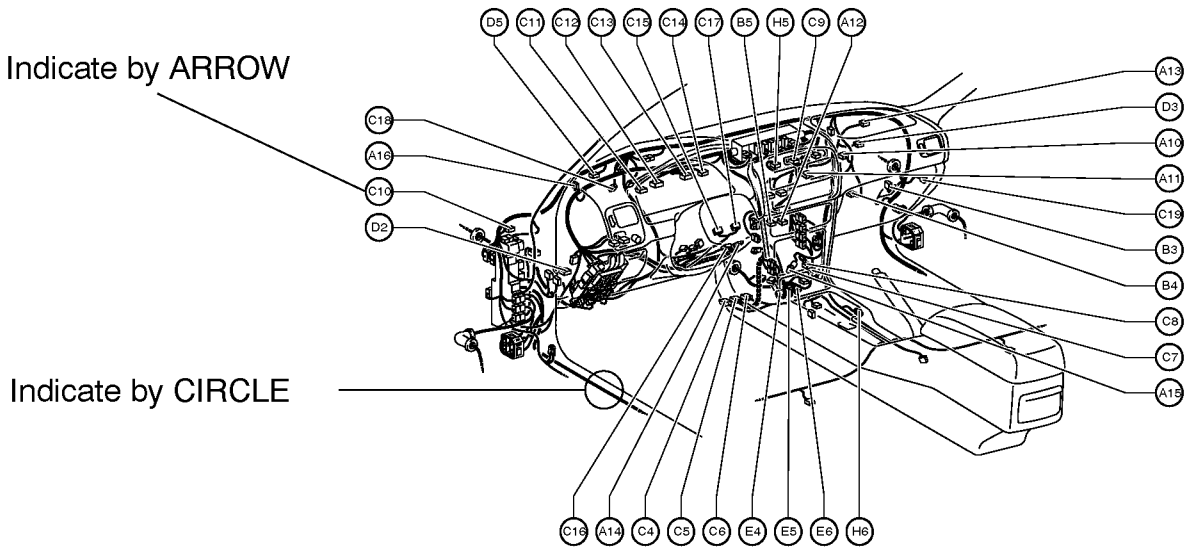

G

Waterproof Type [1]

(Cont. next page)

	1	2				3		4	5	6	7	8	9	10	11
1.0															
1.0 III		M:11863	F:11856												
1.3		M:11188 F:11189				M:11169 F:11170		M:11063 F:11065	M:11181 F:11182		M:11171 F:11172		M:11191 F:11192		M:11173 F:11174
								M:11064 F:11066							
1.8		F:10737						F:10711							
		F:11062													
2.3		M:10495 F:10496	M:10580	F:10609				M:10475 F:10476		M:10650					
		F:10474	M:10592	F:10532				M:10590							
		M:10575	F:10598	F:10572				M:10648							
2.3 II	M:10892 F:10893	M:10842 F:10843	M:11486 F:11019	M:11247 F:11248	F:11207	M:11015 F:11016	F:11143	M:10868 F:10869	M:11078 F:11077	M:10987 F:10988	M:10930 F:10931	M:10890 F:10891		F:11231	
	M:11006 F:11007	M:10886 F:10887	M:11029 F:11030	M:11272 F:11273	F:11235	M:11131 F:11132	F:11145	M:10941 F:10942	F:11024	M:11033 F:11034		M:10890 F:11190			
	M:11270 F:11271	M:10898 F:10899	M:11137 F:11038	F:10974	F:11246	M:11244 F:11245	F:11261	M:11027 F:11028	F:11049	M:11193 F:11194		M:10896 F:10897			
	F:11166	M:10900 F:10901	M:11050 F:11051	F:11025	F:11250	M:11295 F:11245	F:11294	M:11122 F:11037	F:11232	M:11196 F:11197					
	F:11243	M:11072 F:10923	M:11069 F:11070	F:11068	F:11255	F:10834	F:11349	M:11177 F:11178	F:11317	M:11289 F:11290					
	F:11363	M:10959 F:10947	M:11073 F:11075	F:11140	F:11285	F:10845	M:11348	M:11291 F:11292	F:11599	F:10854					
	F:11428	M:10948 F:10949	M:11074 F:11075	F:11149	F:12028	F:10902		F:10943		F:11144					
	F:11252	M:11002 F:11003	M:11141 F:11142	F:11153		F:10919		F:11150		F:11858					
		M:11004 F:11005	M:11155 F:11156	F:11154		F:10981		F:11152							
		M:11008 F:11009	M:11168 F:11162	F:11163		F:11020									

M : Male F : Female

Waterproof Type [1] (Cont'd)

	12	15	40	80											
1.0			F:11215	F:11214											
1.0 III															
1.3	F:11698	M:11088 F:11089													
1.8															
2.3															
2.3 II	M:11086 F:11087														
	F:11151														

M : Male F : Female

Waterproof Type [2]

	1	2		3		4	5	6	8	9	10	11	23	34	
4.8	M:10982 F:10983	M:10927 F:10928		M:10840 F:10841		M:10989 F:10990									
	F:11400	F:11237		M:10944 F:10841		M:11035 F:11036									
6.3	M:10246 F:10247	M:10156 F:10157		M:10347 F:10249											
7.7	M:10114 F:10115														
8.0	M:10836 F:10837	M:10838 F:10839													
	M:11183 F:11184	M:11031 F:11032													
HB3		F:11095	F:11659												
HB4		F:11096	F:11660												
PIN		M:11945													
TLC				F:10554	M:10577										
TODC	M:10240 F:10241			M:10244	F:10353										
1.0 III+4.8														F:12020	F:12021
2.3+6.3										F:10686					
2.3 II+4.8				M:11160 F:11161		M:10749 F:10844	M:10945 F:10946	F:10939	M:10894 F:10895	F:11643	F:11332	M:11239			
						F:10940	M:11021 F:11022			F:11784					
							M:11412 F:11413								
2.3 II+6.3 II													F:11195		
													F:11323		
2.3 II+8.0									M:11241 F:11242						
4.8+8.0				M:11044 F:11045		M:11138 F:11139									

M : Male F : Female

Non–waterproof Type [1]

(Cont. next page)

	1	2			3	4	5	6		7	8		9	10	11
1.0															
1.0 II															
1.0 III		M:11967 F:11919				F:11988	F:11921							F:11924	
							F:11909							F:11948	
1.3		M:11211 F:11212			M:11052 F:11053	M:11186 F:11187	F:11319	F:11616		F:11165	M:11532 F:11533	M:11623		F:11450	F:11041
		M:11368 F:11369			F:11471	F:11107					F:10630			F:11642	F:11083
		F:11436				F:11494								F:11657	
1.8															
1.8 II															
2.3		M:10437 F:10355			M:10573 F:10365	F:10504		M:10384 F:10414	F:10672					F:10322	
						F:10601								F:10669	
2.3 II	M:10870 F:10871	M:10824 F:10825	M:10905 F:10906	F:11080	M:10907 F:10908	M:10794 F:10795		M:10796 F:10797	F:10957	M:11528 F:11529	M:10798 F:10799		M:11534 F:11535	M:10800 F:10801	M:10829 F:10830
	M:11026 F:10871	M:10833 F:10825	M:10934 F:10935	F:11098	F:11071	M:10858 F:10795		M:11110 F:10797	F:10964					M:11102 F:10997	M:11538 F:11539
	M:11097 F:10871	M:11299 F:10825	M:11159 F:11148	F:11227	F:11079	M:11399 F:10795		M:11099 F:10933	F:11280					M:11536 F:11537	F:10966
	M:11146 F:11147	M:11300 F:10825	F:10823	F:11278		M:11012 F:11013		M:11101 F:10996						F:10822	
		M:10849 F:10850	F:10835	F:11608		M:11023 F:10904		M:10998 F:11001						F:10965	
		M:10859 F:10860	F:10855			M:11100 F:11090		M:11010 F:11011							
		M:11060 F:10860	F:10962			M:11085 F:10789		M:11587 F:11011							

M : Male F : Female

Non–waterproof Type [1] (Cont'd)

	12		13	14	15	16	17	18	19	20	21	22	25	28	34
1.0	F:11129					F:10764									
1.0 II	F:11408					F:11219						F:11220		F:11218	F:11221
						F:11391									
1.0 III				F:11925				F:11914				M:11962 F:11927			
				F:11911				F:11913				M:11926 F:11915			
1.3				M:11654 F:11556	F:11179	M:11573 F:11574			M:11570 F:11571		F:11125	M:11503 F:11502	M:11133 F:11055		
					F:11264							F:11628	F:11043		
1.8	F:10658	F:10973		F:10697				F:10656		F:10696					M:10722
	F:10743														
1.8 II	F:11424			F:11433											
2.3	M:10513 F:10432							M:10325 F:10326							
2.3 II	M:10802 F:10803		M:10804 F:10805	M:10806 F:10807	M:10827 F:10828	M:10808 F:10809	F:11417	M:10818 F:10819		M:10810 F:10811		M:10977 F:10875			
	M:11530 F:11531		M:11541 F:11542	F:10852		M:11167 F:10848				M:10820 F:10821		F:11552			
	F:10967		F:11604												
	F:10968														
	F:11121														
	F:11661														

M : Male F : Female

Non–waterproof Type [2]

	1	2	3	4	5	6		8	9	10	12	13	14	17	22
4.8	M:11258 F:11259	M:10915 F:10916	F:10980	M:11135 F:11136		M:10975 F:10976	F:11778	M:10963 F:10926		M:10861 F:10862					
	F:10911	M:11093 F:11094		M:11878 F:11742		F:11091		F:11092							
	F:10912					F:11583		F:11615							
								F:11686							
6.3	M:10178 F:10179	M:10213 F:10214	M:10283 F:10216			M:10172 F:10173		M:10174 F:10175		M:10176 F:10177					
	F:10619														
	F:10786														
	F:10792														
7.7		M:10356 F:10357													
8.0	M:10994 F:10995	M:10958 F:10903	F:10956	M:10866 F:10867											
		M:11655 F:11579	F:11314												
		F:11684	F:11685												
FOG–LP		F:10481													
FTC			F:10489		F:10487										
			F:10490		F:10488										
HEAD–LANP			F:10428												
LAC									F:10133			F:10132			M:10131
LC						M:10289									
MFPC				F:10645				F:10301		F:10302	F:10303		F:10369		
										F:10304	F:10372				

M : Male F : Female

Non–waterproof Type [3]

(Cont. next page)

	1	2	3	4	5	6	7	8	9	10	12	13	14	15	16
MIC				F:10378					F:10152			F:10062			
OBD II															F:11665
PULSE LOCK										F:10294	F:10351		F:10371		
SFPC										F:11116		F:11114			F:11113
												F:11115			
SL			F:10070				F:10071								
SP		F:10362			F:10376										
TLC						M:10401 F:10402				M:10719 F:10528					F:10635
TNS				M:10466 F:10467									M:10470 F:10471		
TODC	M:10182 F:10183				M:10040 F:10274				M:10044 F:10045						
1.0+1.8															
1.0 II+1.8 II													F:11225		F:11565
1.0 III+2.3 II															
1.3+2.3 II										M:11613				F:11042	
														F:11056	
2.3+6.3								F:10463							

M : Male F : Female

Non–waterproof Type [3] (Cont'd)

	17	18		20	22	23	24	25	26		32				
MIC	F:10037														
OBD II															
PULSE LOCK		F:10295					F:10296								
		F:10350													
SFPC															
SL															
SP															
TLC															
TNS					M:10552 F:10526				M:10599 F:10587						
TODC															
1.0+1.8					F:10765				F:10925	F:10918					
									F:10763						
1.0 II+1.8 II		M:11223 F:11226	M:11223 F:11224		F:11392				F:11390	F:11423	M:11222				
1.0 III+2.3 II								F:11877							
1.3+2.3 II	F:11671	F:11594		F:11469		M:10920 F:10921		M:11158 F:11058							
		F:11595		M:11504 F:11469		M:11208 F:10921									
2.3+6.3															

M : Male F : Female

Non–waterproof Type [4]

	4	5	6	8	10	11	12	14	15	16	19	20	24	26	
2.3 II+4.8	M:11126 F:11118	M:10985 F:10986		M:10876 F:10877	M:11596 F:11527	M:10872 F:10873	M:10878 F:10879	M:10812 F:10813	M:10814 F:10815	M:10884 F:10885	M:10882 F:10883	M:10816 F:10817	M:10880 F:10881	M:11631	
				F:11130	F:10993		F:10932								
				F:11279											
				F:11701											
2.3 II+8.0			M:10909 F:10910								M:10856 F:10857				
4.8+8.0		F:10888	F:10889												
6.3+7.7			F:10447												

M : Male F : Female

Terminal Packing

Type	6.3	
Cav. No.	1	3
		
P/N	90980–09210	90980–09211
Type	7.7	
Cav. No.	1	
		
P/N	90980–09380	
Type	TODC	
Cav. No.	1	3
		
P/N	90980–09378	90980–09379

Terminal Packing

Type	**2.3**	
Cav. No.	1	
	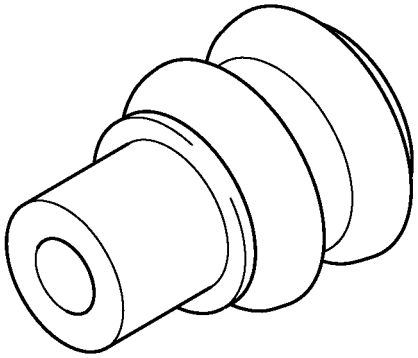	
P/N	90980–09148, 09151, 09149	
Type	**2.3II**	
Cav. No.	1	
	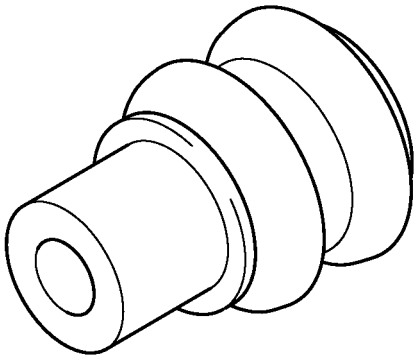	
P/N	90980–09451	
Type	**HB3, HB4**	
Cav. No.	1	
	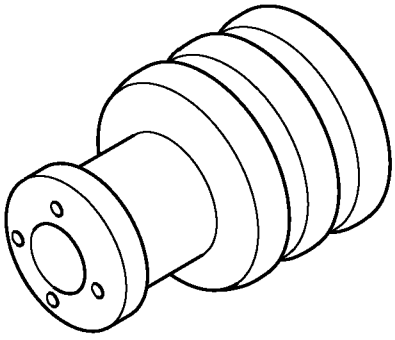	
P/N	90980–09396	

Hole Plug

Type	**6.3, 7.7, TODC**	**4.8**
		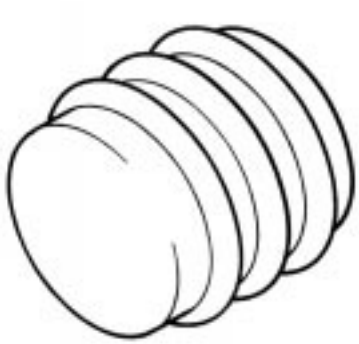
P/N	90950–01730	90980–09325
Type	**8.0**	**2.3, 2.3II**
	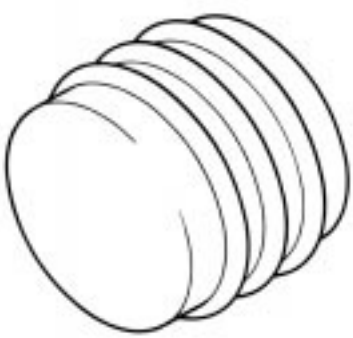	
P/N	90980–09353	90980–09152
Type	**TLC**	**1.3**
		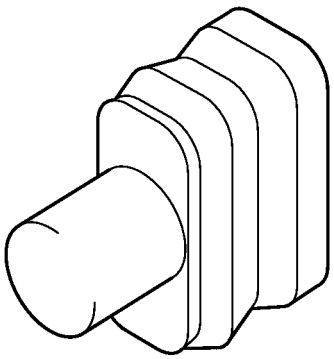
P/N	90980–09162	90980–09414

Press Sleeve

Color	YELLOW	BLUE
		
P/N	82999–12030	82999–12020
Color	RED	
		
P/N	82999–12010	

FOREWORD

This wiring diagram manual has been prepared to provide information on the electrical system of the 1995 SUPRA.

Applicable models: JZA 80 Series

For service specifications and repair procedures of the above models other than those listed in this manual, refer to the following manuals:

Manual Name	Pub. No.
• 1995 SUPRA Repair Manual Volume 1 Volume 2 • 1995 TOYOTA New Car Features	 RM408U1 RM408U2 NCF109U

All information in this manual is based on the latest product information at the time of publication. However, specifications and procedures are subject to change without notice.

TOYOTA MOTOR CORPORATION

NOTICE

When handling supplemental restraint system components (removal, installation or inspection, etc.), always follow the direction given in the repair manuals listed above to prevent accidents and supplemental restraint system malfunction.

INTRODUCTION

This manual consists of the following 11 sections:

No.	Section	Description
A	INDEX	Index of the contents of this manual.
	INTRODUCTION	Brief explanation of each section.
B	HOW TO USE THIS MANUAL	Instructions on how to use this manual.
C	TROUBLE–SHOOTING	Describes the basic inspection procedures for electrical circuits.
D	ABBREVIATIONS	Defines the abbreviations used in this manual.
E	GLOSSARY OF TERMS AND SYMBOLS	Defines the symbols and functions of major parts.
F	RELAY LOCATIONS	Shows position of the Electronic Control Unit, Relays, Relay Block, etc. This section is closely related to the system circuit.
G	ELECTRICAL WIRING ROUTING	Describes position of Parts Connectors, Splice points, Ground points, etc. This section is closely related to the system circuit.
H	POWER SOURCE (Current Flow Chart)	Describes power distribution from the power supply to various electrical loads.
I	INDEX	Index of the system circuits.
	SYSTEM CIRCUITS	Electrical circuits of each system are shown from the power supply through ground points. Wiring connections and their positions are shown and classified by code according to the connection method. (Refer to the section, “How to use this manual”). The “System Outline” and “Service Hints” useful for troubleshooting are also contained in this section.
J	GROUND POINTS	Shows ground positions of all parts described in this manual.
K	OVERALL ELECTRICAL WIRING DIAGRAM	Provides circuit diagrams showing the circuit connections.

This manual provides information on the electrical circuits installed on vehicles by dividing them into a circuit for each system.

The actual wiring of each system circuit is shown from the point where the power source is received from the battery as far as each ground point. (All circuit diagrams are shown with the switches in the OFF position.)

When troubleshooting any problem, first understand the operation of the circuit where the problem was detected (see System Circuit section), the power source supplying power to that circuit (see Power Source section), and the ground points (see Ground Points section). See the System Outline to understand the circuit operation.

When the circuit operation is understood, begin troubleshooting of the problem circuit to isolate the cause. Use Relay Location and Electrical Wire Routing sections to find each part, junction block and wiring harness connectors, wiring harness and wiring harness connectors, splice points, and ground points of each system circuit. Internal wiring for each junction block is also provided for better understanding of connection within a junction block.

Wiring related to each system is indicated in each system circuit by arrows (from __ , to __). When overall connections are required, see the Overall Wiring Diagram at the end of this manual.

* The system shown here is an EXAMPLE ONLY. It is different to the actual circuit shown in the SYSTEM CIRCUITS SECTION.

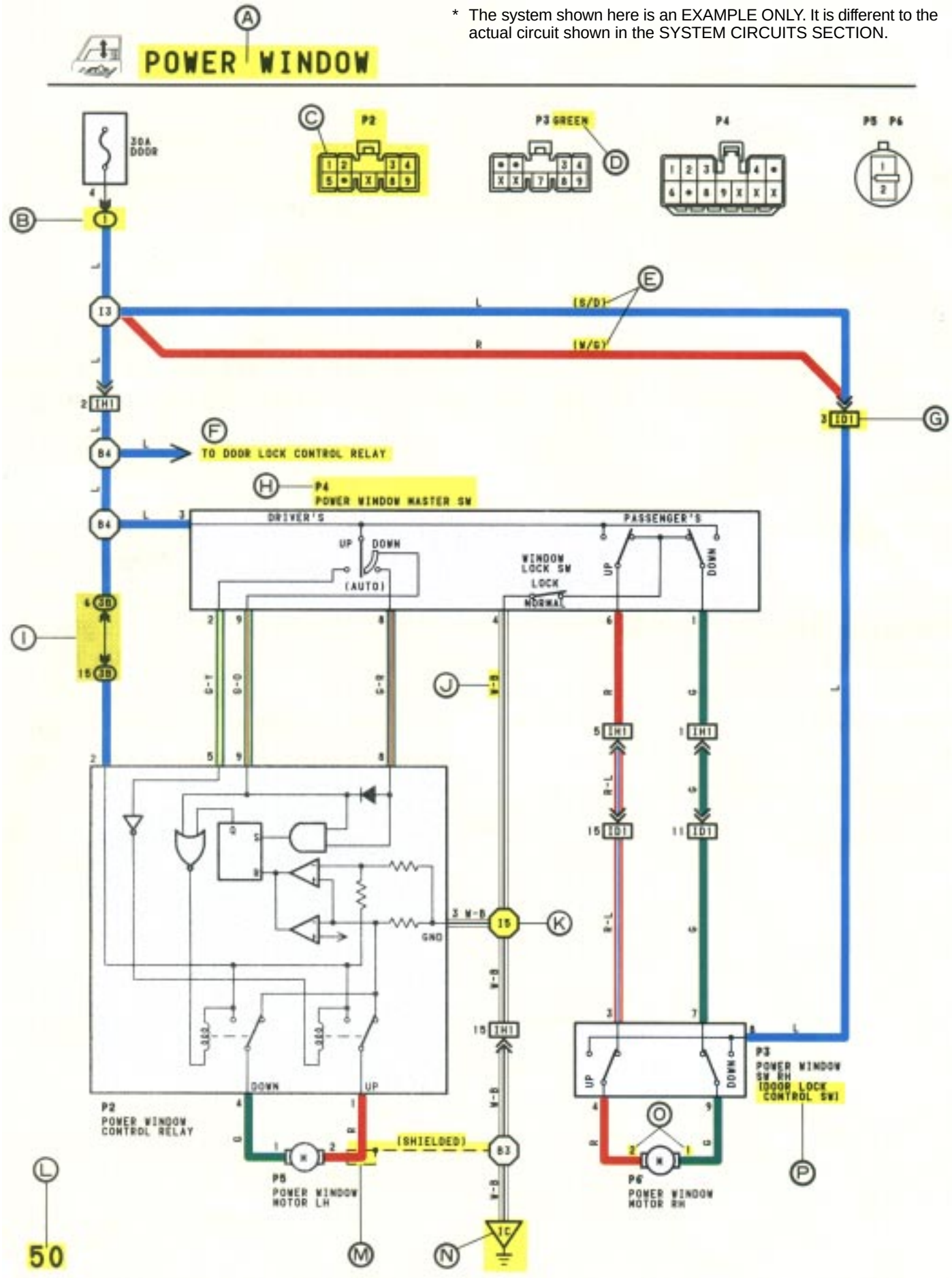

Ⓐ : System Title

Ⓑ : Indicates a Relay Block. No shading is used and only the Relay Block No. is shown to distinguish it from the J/B.

Example: Indicates Relay Block No. 1.

Ⓒ : Indicates the connector to be connected to a part (the numeral indicates the pin No.)

Explanation of pin use.

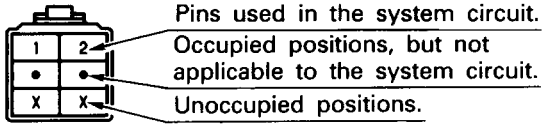

The pins shown are only for the highest grade, or only include those in the specification.

Ⓓ : Connector Color

Connectors not indicated are milky white in color.

Ⓔ : ( ) is used to indicate different wiring and connector, etc. when the vehicle model, engine type, or specification is different.

Ⓕ : Indicates related system.

Ⓖ : Indicates the wiring harness and wiring harness connector. The wiring harness with male terminal is shown with arrows (⩔).

Outside numerals are pin numbers.

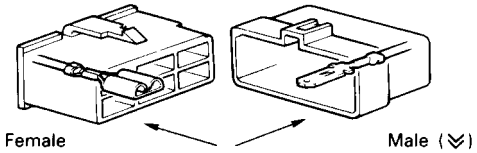

The first letter of the code for each wiring harness and wiring harness connector(s) indicates the component's location, e.g., "E" for the Engine Compartment, "I" for the Instrument Panel and Surrounding area, and "B" for the Body and Surrounding area.

When more than one code has the first and second letters in common, followed by numbers (e.g., IH1, IH2), this indicates the same type of wiring harness and wiring harness connector.

Ⓗ : Represents a part (all parts are shown in sky blue). The code is the same as the code used in parts position.

Ⓘ : Junction Block (The number in the circle is the J/B No. and the connector code is shown beside it). Junction Blocks are shaded to clearly separate them from other parts (different junction blocks are shaded differently for further clarification).

Example:

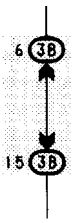

3B indicates that it is inside Junction Block No. 3.

Ⓙ : Indicates the wiring color.

Wire colors are indicated by an alphabetical code.

B = Black	L = Blue	R = Red
BR = Brown	LG = Light Green	V = Violet
G = Green	O = Orange	W = White
GR = Gray	P = Pink	Y = Yellow

The first letter indicates the basic wire color and the second letter indicates the color of the stripe.

Example: L – Y

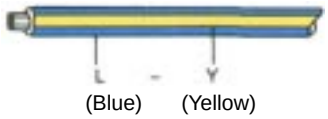

(Blue) (Yellow)

Ⓚ : Indicates a wiring Splice Point (Codes are "E" for the Engine Room, "I" for the Instrument Panel, and "B" for the Body).

Example:

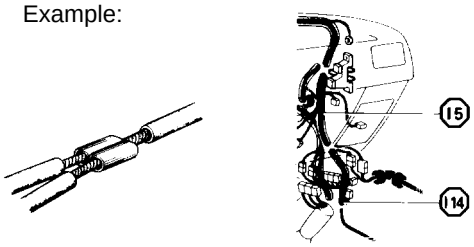

The Location of Splice Point I 5 is indicated by the shaded section.

Ⓛ : Page No.

Ⓜ : Indicates a shielded cable.

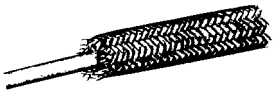

Ⓝ : Indicates a ground point.

The first letter of the code for each ground point(s) indicates the component's location, e.g., "E" for the Engine Compartment, "I" for the Instrument Panel and Surrounding area, and "B" for the Body and Surrounding area.

Ⓞ : Indicates the pin number of the connector.

The numbering system is different for female and male connectors.

Example:

Numbered in order from upper left to lower right

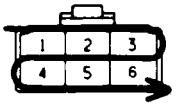

Female

Numbered in order from upper right to lower left

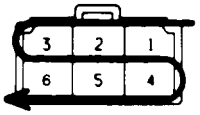

Male

Ⓟ : When 2 parts both use one connector in common, the parts connector name used in the wire routing section is shown in square brackets [ ].

Q

SYSTEM OUTLINE

WITH THE IGNITION SW TURNED ON, THE CURRENT FLOWS TO TERMINAL 3 OF THE POWER WINDOW MASTER SW, TERMINAL 2 OF THE POWER WINDOW CONTROL RELAY AND TERMINAL 8 OF THE POWER WINDOW SW THROUGH THE DOOR FUSE.

1. DRIVER'S WINDOW "MANUAL UP" OPERATION BY MASTER SW

HOLDING MANUAL SW (DRIVER'S) ON "UP" POSITION LOCATED IN POWER WINDOW MASTER SW, THE CURRENT FLOWS TO TERMINAL 5 OF THE POWER WINDOW CONTROL RELAY THROUGH TERMINAL 3 OF THE MASTER SW → TERMINAL 2 TO OPERATE A POWER WINDOW CONTROL RELAY. THUS THE CURRENT INSIDE THE RELAY FLOWS FROM TERMINAL 2 OF THE RELAY → TERMINAL 1 → TERMINAL 2 OF THE POWER WINDOW MOTOR → TERMINAL 1 → TERMINAL 4 OF THE RELAY → TERMINAL 3 → TO GROUND. THE MOTOR TURNS TO ASCENT THE WINDOW. RELEASING THIS SW, THE ROTATION OF MOTOR IS STOPPED AND THE WINDOWS CAN STOP AT WILL POINT.

(FOR THE "MANUAL DOWN" OPERATION, CURRENT FLOWS IN THE REVERSE DIRECTION BECAUSE THE TERMINALS WHERE IT FLOWS ARE CHANGED).

2. DRIVER'S WINDOW "AUTO DOWN" OPERATION BY MASTER SW

ONCE THE "AUTO DOWN" BUTTON OF THE MASTER SW IS PUSHED, THE CURRENT FLOWS TERMINAL 9 OF THE POWER WINDOW CONTROL RELAY THROUGH TERMINAL 3 OF THE MASTER SW → TERMINALS 8 AND 9 TO OPERATE THE RELAY. THUS THE CURRENT INSIDE THE POWER WINDOW CONTROL RELAY FLOWS FROM TERMINAL 2 OF THE RELAY → TERMINAL 4 → TERMINAL 1 OF THE POWER WINDOW MOTOR → TERMINAL 2 → TERMINAL 1 OF THE RELAY → TERMINAL 3 → TO GROUND. THE MOTOR CONTINUES THE ROTATION ENABLING TO DESCENT THE WINDOW.

THE WINDOW DESCENDS TO THE END POSITION. THE CURRENT WILL BE CUT OFF TO RELEASE THE AUTO DOWN FUNCTION BASED ON THE INCREASING CURRENT BETWEEN TERMINAL 2 OF THE RELAY AND TERMINAL 1 IN RELAY.

3. DRIVER'S WINDOW AUTO DOWN RELEASE OPERATION BY MASTER SW

HOLDING THE MANUAL SW (DRIVER'S) ON "UP" POSITION IN OPERATING AUTO DOWN. THE CURRENT FROM TERMINAL 3 OF THE MASTER SW PASSING TERMINAL 2 FLOWS TERMINAL 5 OF THE RELAY AND RELEASES THE AUTO DOWN FUNCTION IN THE POWER WINDOW CONTROL RELAY. RELEASING THE HAND FROM SW, WINDOW STOPS AND CONTINUING ON TOUCHING SW, THE FUNCTION SWITCHES TO MANUAL UP OPERATION.

4. PASSENGER'S WINDOW UP OPERATION (MASTER SW) AND WINDOW LOCK SW OPERATION

HOLDING PASSENGER'S WINDOW SW (MASTER SW) ON "UP", THE CURRENT FLOWS FROM TERMINAL 3 OF THE MASTER SW PASSING TERMINAL 6 TO TERMINAL 3 OF THE POWER WINDOW SW (PASSENGER'S) → TERMINAL 4 → TERMINAL 2 OF THE MOTOR → TERMINAL 1 → TERMINAL 9 OF THE POWER WINDOW SW → TERMINAL 7 → TERMINAL 1 OF THE MASTER SW → TERMINAL 4 TO GROUND. THE MOTOR RUNS TO ASCENT THE WINDOW. RELEASING THIS SW, THE ROTATION OF MOTOR IS STOPPED AND WINDOW CAN STOP AT WILL PLACE.

SWITCHING THE WINDOW LOCK SW IN "LOCK" POSITION, THE CIRCUIT IS OPENED AND STOPPED THE MOTOR ROTATION.

(FOR THE DOWN OPERATION, CURRENT FLOWS IN THE REVERSE DIRECTION BECAUSE THE TERMINALS WHERE IT FLOWS ARE CHANGED).

R

SERVICE HINTS

P 2 POWER WINDOW CONTROL RELAY

3–GROUND: ALWAYS CONTINUITY

2–GROUND: APPROX. **12** VOLTS WITH IGNITION SW AT **ON** POSITION

5–GROUND: APPROX. **12** VOLTS WITH IGNITION SW AT **ON** POSITION AND MASTER SW AT **UP** POSITION

8–GROUND: APPROX. **12** VOLTS WITH IGNITION SW AT **ON** POSITION AND MASTER SW AT **AUTO DOWN** POSITION

9–GROUND: APPROX. **12** VOLTS WITH IGNITION SW AT **ON** POSITION AND MASTER SW AT **DOWN** OR **AUTO DOWN** POSITION

P 4 POWER WINDOW MASTER SW

4–GROUND: ALWAYS CONTINUITY

3–GROUND: APPROX. **12** VOLTS WITH IGNITION SW AT **ON** POSITION

WINDOW LOCK SW

OPEN WITH THE WINDOW LOCK SW AT **LOCK** POSITION

S

: PARTS LOCATION

CODE	SEE PAGE	CODE	SEE PAGE	CODE	SEE PAGE
P 2	21	**P 4**	21	**P 6**	21
P 3	21	**P 5**	21		

T

: RELAY BLOCKS

CODE	SEE PAGE	RELAY BLOCK (RELAY BLOCK LOCATION)
1	16	R/B NO. 1 (INSTRUMENT PANEL LEFT SIDE)

U

: JUNCTION BLOCK AND WIRE HARNESS CONNECTOR

CODE	SEE PAGE	JUNCTION BLOCK AND WIRE HARNESS (CONNECTOR LOCATION)
3B	14	J/B NO. 3 AND COWL WIRE (INSTRUMENT PANEL LEFT SIDE)

V

: CONNECTOR JOINING WIRE HARNESS AND WIRE HARNESS

CODE	SEE PAGE	JOINING WIRE HARNESS AND WIRE HARNESS (CONNECTOR LOCATION)
ID1	26	FRONT DOOR RH WIRE AND COWL WIRE (RIGHT KICK PANEL)
IH1	26	FRONT DOOR LH WIRE AND COWL WIRE (LEFT KICK PANEL)

W

: GROUND POINTS

CODE	SEE PAGE	GROUND POINT LOCATION
IC	24	COWL LEFT

X

: SPLICE POINTS

CODE	SEE PAGE	WIRE HARNESSES WITH SPLICE POINTS
I 5	24	COWL WIRE

Ⓠ : Explains the system outline.

Ⓡ : Indicates values or explains the function for reference during troubleshooting.

Ⓢ : Indicates the reference page showing the position on the vehicle of the parts in the system circuit.

Example: Part “P4” (Power Window Master SW) is on page 21 of the manual.

* The letter in the code is from the first letter of the part, and the number indicates its order in parts starting with that letter.

Example: P 4

Part is 4th in order

Power Window Master SW

Ⓣ : Indicates the reference page showing the position on the vehicle of Relay Block Connectors in the system circuit.

Example: Connector “1” is described on page 16 of this manual and is installed on the left side of the instrument panel.

Ⓤ : Indicates the reference page showing the position on the vehicle of J/B and Wire Harness in the system circuit.

Example: Connector “3B”connects the Cowl Wire and J/B No. 3. It is described on page 14 of this manual, and is installed on the instrument panel left side.

Ⓥ : Indicates the reference page describing the wiring harness and wiring harness connector (the female wiring harness is shown first, followed by the male wiring harness).

Example: Connector “ID1”connects the front door RH wire (female) and cowl wire (male). It is described on page 26 of this manual, and is installed on the right side kick panel.

Ⓦ : Indicates the reference page showing the position of the ground points on the vehicle.

Example: Ground point “IC” is described on page 24 of this manual and is installed on the cowl left side.

Ⓧ : Indicates the reference page showing the position of the splice points on the vehicle.

Example: Splice point “I 5” is on the Cowl Wire Harness and is described on page 24 of this manual.

HINT:

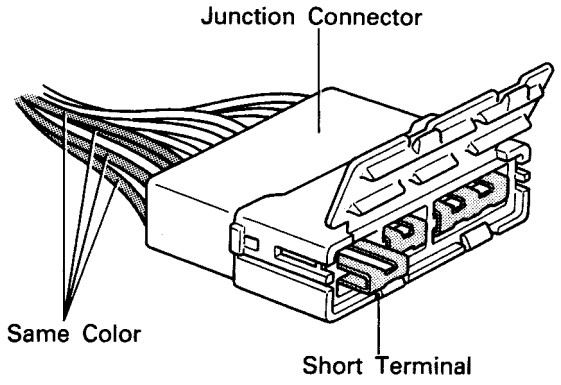

Junction connector (code: J1, J2, J3, J4, J5, J6, J7, J8, J9) in this manual include a short terminal which is connected to a number of wire harnesses. Always perform inspection with the short terminal installed. (When installing the wire harnesses, the harnesses can be connected to any position within the short terminal grouping. Accordingly, in other vehicles, the same position in the short terminal may be connected to a wire harness from a different part.)

Wire harness sharing the same short terminal grouping have the same color.

The “Current Flow Chart” section, describes which parts each power source (fuses, fusible links, and circuit breakers) transmits current to. In the Power Source circuit diagram, the conditions when battery power is supplied to each system are explained. Since all System Circuit diagrams start from the power source, the power source system must be fully understood.

POWER SOURCE (Current Flow Chart)

The chart below shows the route by which current flows from the battery to each electrical source (Fusible Link, Circuit Breaker, Fuse, etc.) and other parts.

The next page and following pages show the parts to which each electrical source outputs current.

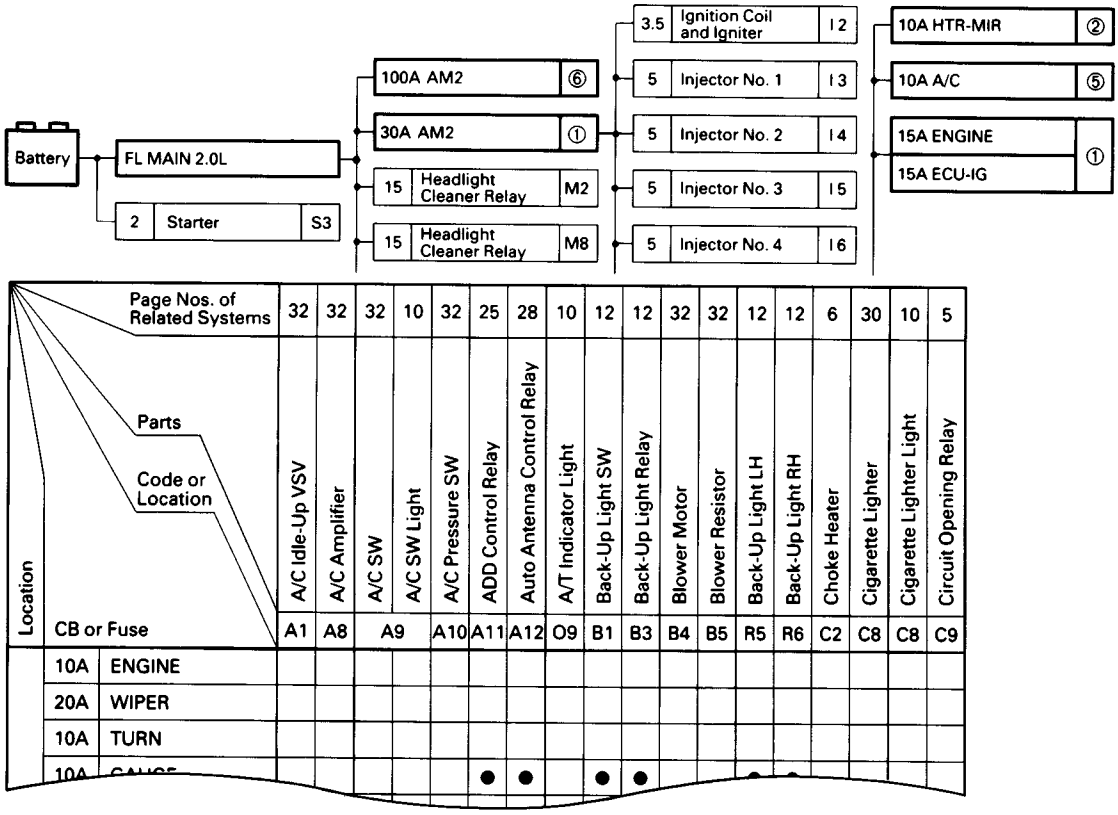

POWER SOURCE

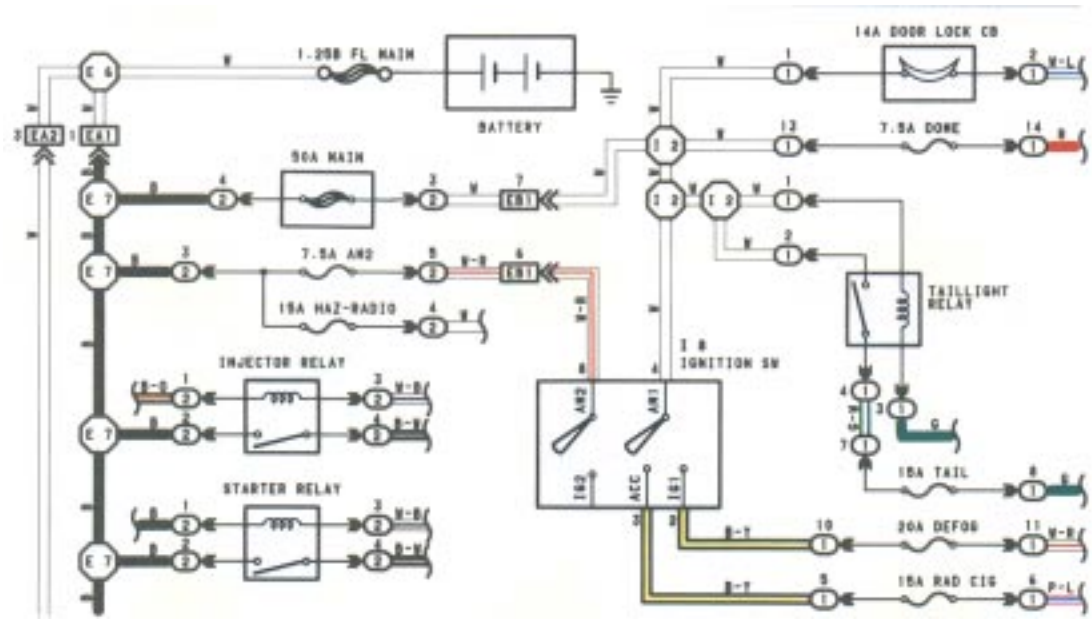

* The system shown here is an EXAMPLE ONLY. It is different to the actual circuit shown in the SYSTEM CIRCUITS SECTION.

The ground points circuit diagram shows the connections from all major parts to the respective ground points. When troubleshooting a faulty ground point, checking the system circuits which use a common ground may help you identify the problem ground quickly. The relationship between ground points (EA , IB , and IC shown below) can also be checked this way.

GROUND POINTS

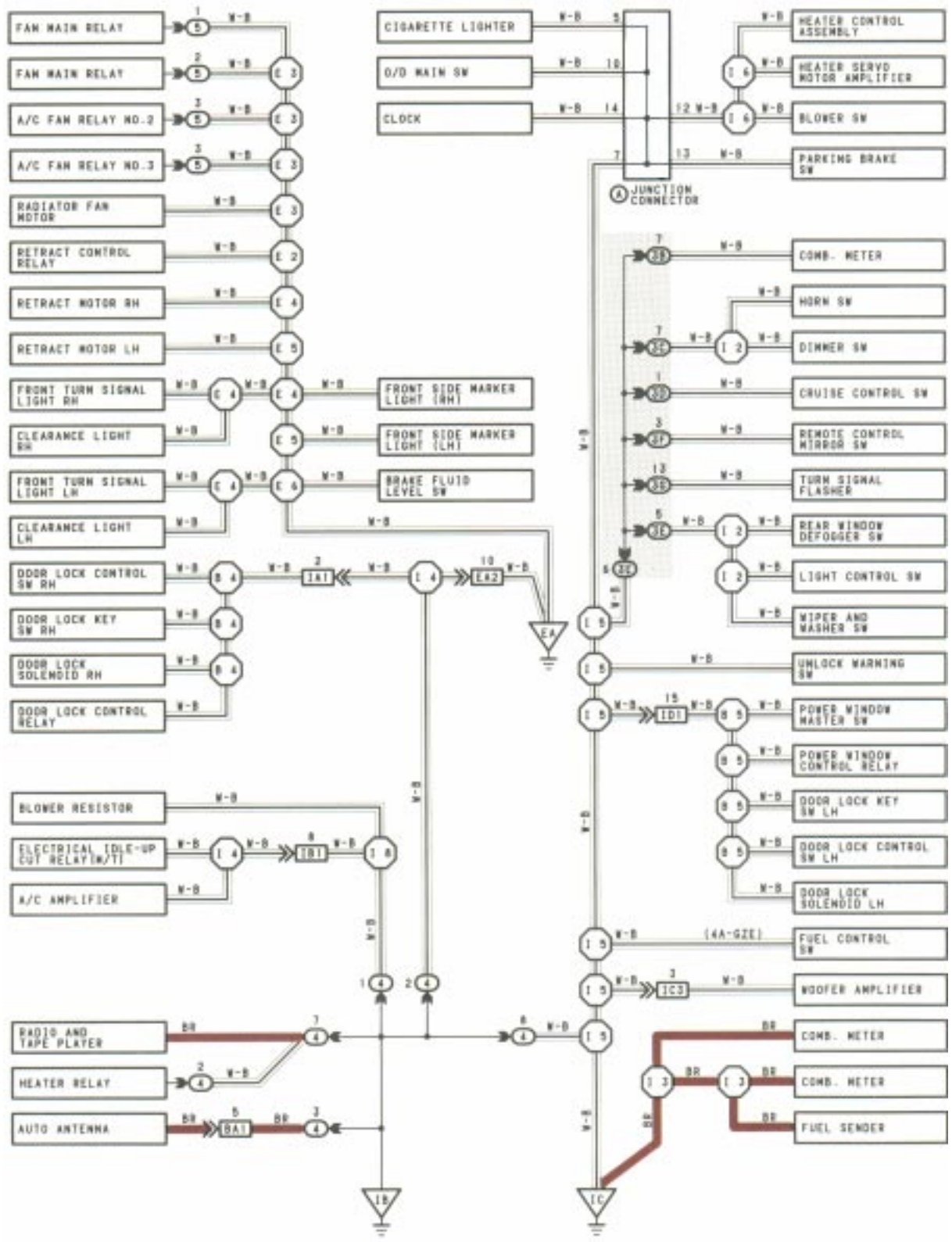

* The system shown here is an EXAMPLE ONLY. It is different to the actual circuit shown in the SYSTEM CIRCUITS SECTION.

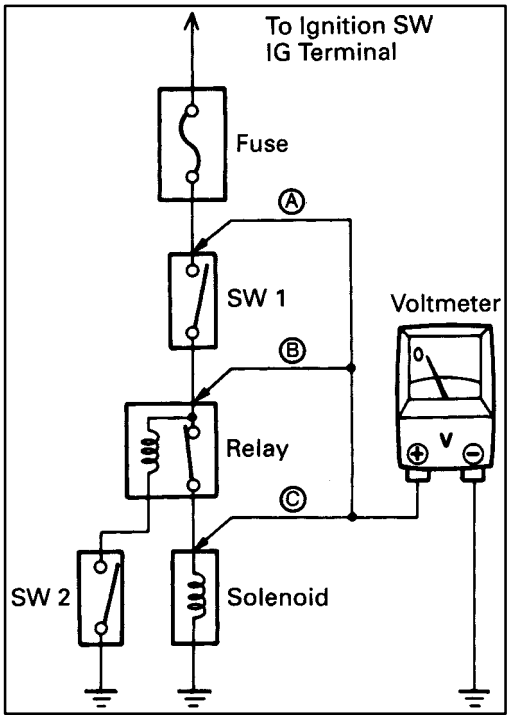

VOLTAGE CHECK

(a) Establish conditions in which voltage is present at the check point.

Example:

Ⓐ – Ignition SW on

Ⓑ – Ignition SW and SW 1 on

Ⓒ – Ignition SW, SW 1 and Relay on (SW 2 off)

(b) Using a voltmeter, connect the negative lead to a good ground point or negative battery terminal, and the positive lead to the connector or component terminal. This check can be done with a test light instead of a voltmeter.

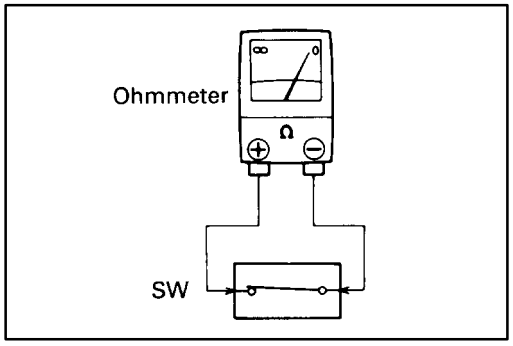

CONTINUITY AND RESISTANCE CHECK

(a) Disconnect the battery terminal or wire so there is no voltage between the check points.

(b) Contact the two leads of an ohmmeter to each of the check points.

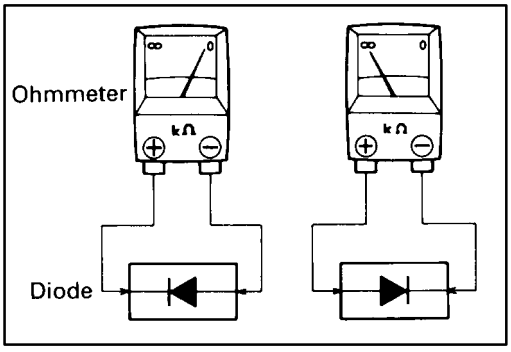

If the circuit has diodes, reverse the two leads and check again.

When contacting the negative lead to the diode positive side and the positive lead to the negative side, there should be continuity.

When contacting the two leads in reverse, there should be no continuity.

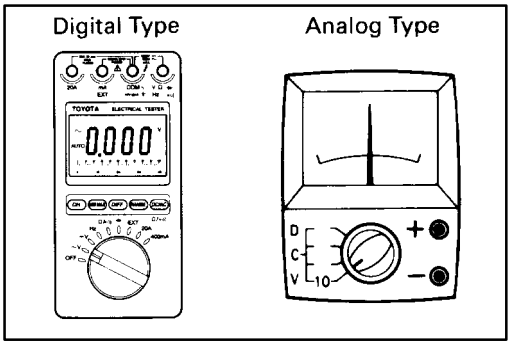

(c) Use a volt/ohmmeter with high impedance (10 kΩ/V minimum) for troubleshooting of the electrical circuit.

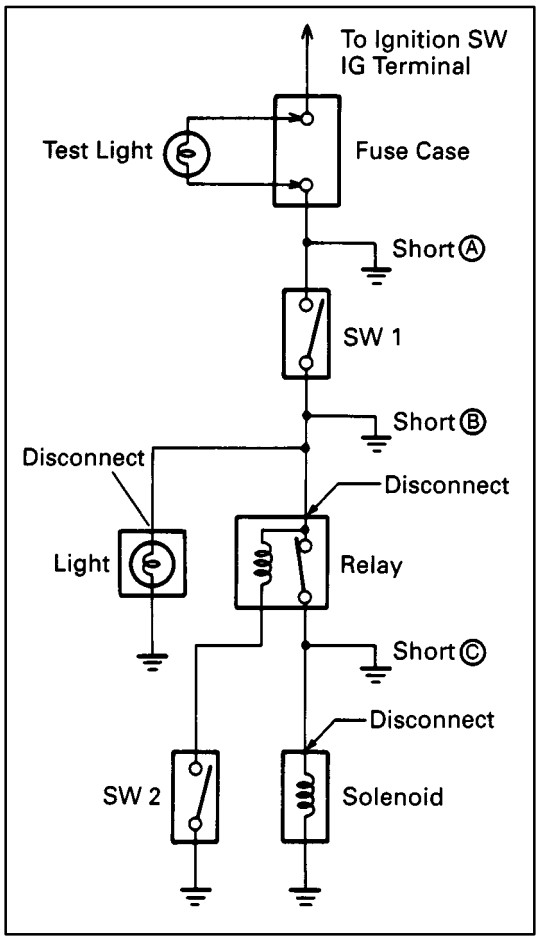

FINDING A SHORT CIRCUIT

(a) Remove the blown fuse and disconnect all loads of the fuse.

(b) Connect a test light in place of the fuse.

(c) Establish conditions in which the test light comes on.

Example:

Ⓐ – Ignition SW on

Ⓑ – Ignition SW and SW 1 on

Ⓒ – Ignition SW, SW 1 and Relay on (Connect the Relay) and SW 2 off (or Disconnect SW 2)

(d) Disconnect and reconnect the connectors while watching the test light.

The short lies between the connector where the test light stays lit and the connector where the light goes out.

(e) Find the exact location of the short by lightly shaking the problem wire along the body.

CAUTION:

(a) Do not open the cover or the case of the ECU unless absolutely necessary. (If the IC terminals are touched, the IC may be destroyed by static electricity.)

(b) When replacing the internal mechanism (ECU part) of the digital meter, be careful that no part of your body or clothing comes in contact with the terminals of leads from the IC, etc. of the replacement part (spare part).

DISCONNECTION OF MALE AND FEMALE CONNECTORS

To pull apart the connectors, pull on the connector itself, not the wire harness.

HINT: Check to see what kind of connector you are disconnecting before pulling apart.

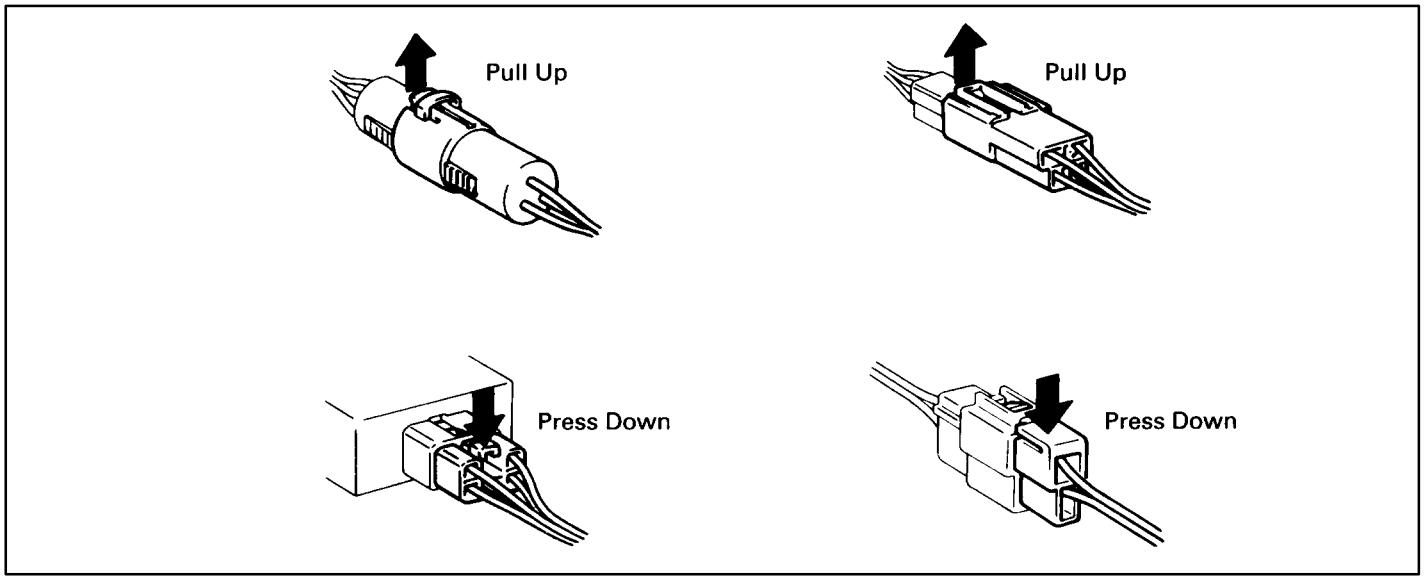

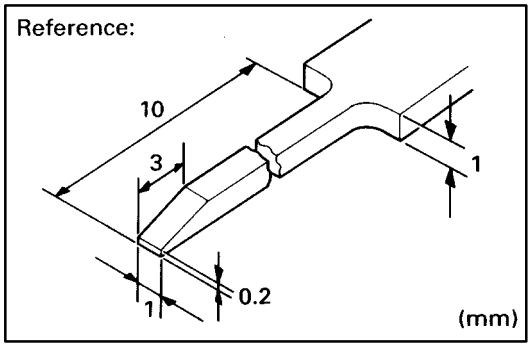

HOW TO REPLACE TERMINAL

(with terminal retainer or secondary locking device)

1. PREPARE THE SPECIAL TOOL

   HINT: To remove the terminal from the connector, please construct and use the special tool or like object shown on the left.

2. DISCONNECT CONNECTOR

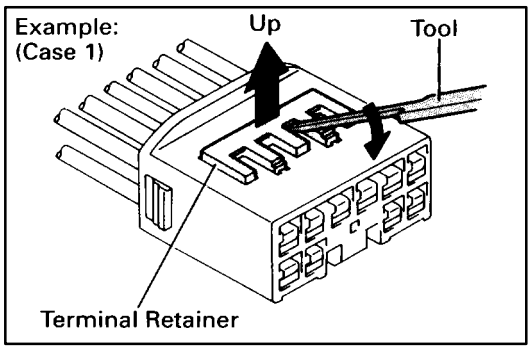

3. DISENGAGE THE SECONDARY LOCKING DEVICE OR TERMINAL RETAINER.

   (a) Locking device must be disengaged before the terminal locking clip can be released and the terminal removed from the connector.

   (b) Use a special tool or the terminal pick to unlock the secondary locking device or terminal retainer.

NOTICE:

Do not remove the terminal retainer from connector body.

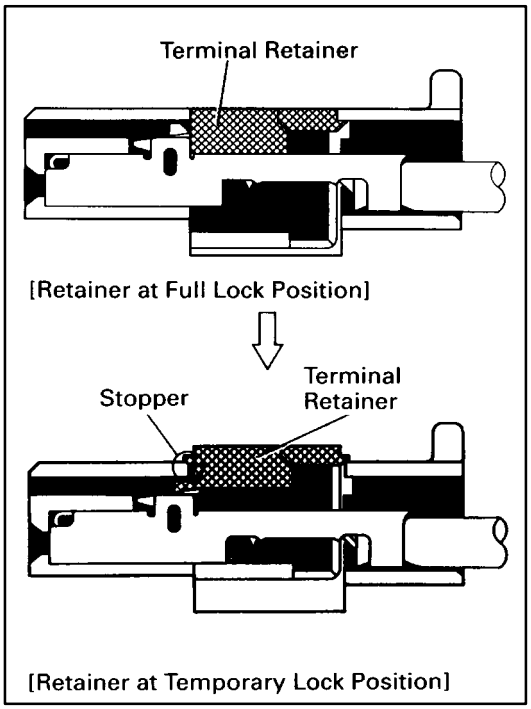

Ⓐ For Non–Waterproof Type Connector

HINT: The needle insertion position varies according to the connector's shape (number of terminals etc.), so check the position before inserting it.

"Case 1"

Raise the terminal retainer up to the temporary lock position.

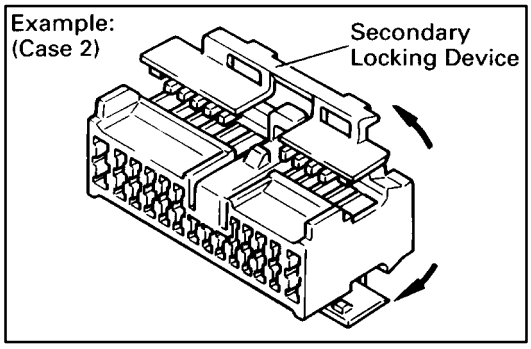

"Case 2"

Open the secondary locking device.

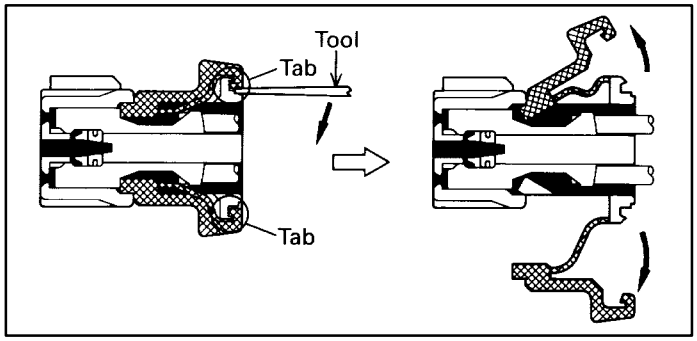

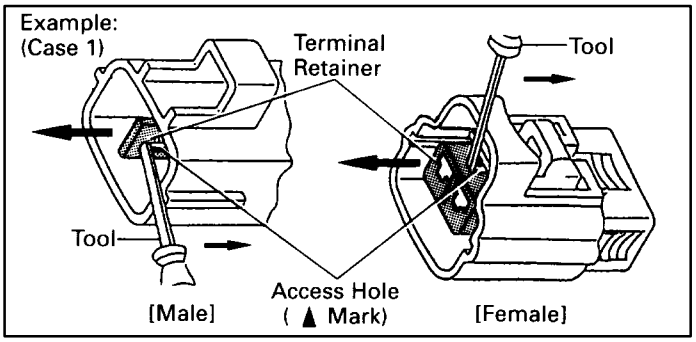

Ⓑ For Waterproof Type Connector

HINT: Terminal retainer color is different according to connector body.

Example:

Terminal Retainer	Connector Body
Black or White	: Gray
Black or White	: Dark Gray
Gray or White	: Black

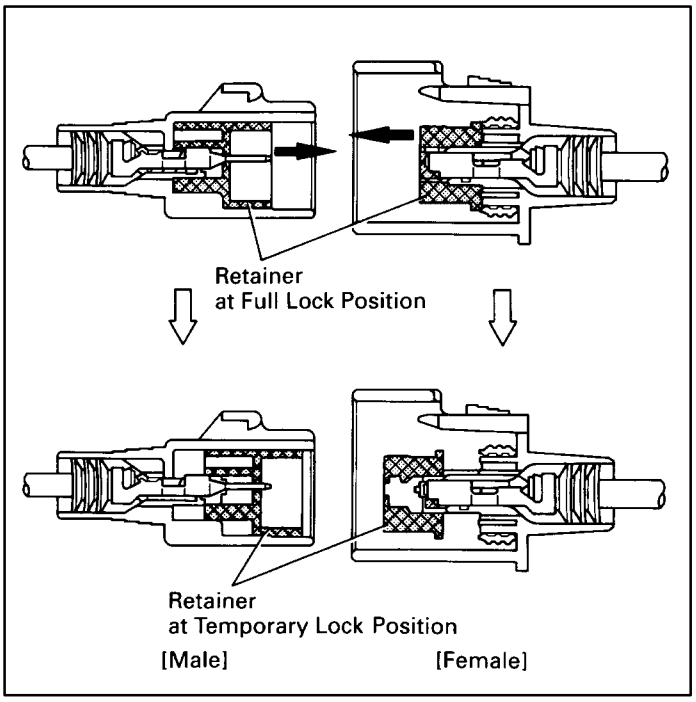

"Case 1"

Type where terminal retainer is pulled up to the temporary lock position (Pull Type).

Insert the special tool into the terminal retainer access hole (▲ Mark) and pull the terminal retainer up to the temporary lock position.

HINT: The needle insertion position varies according to the connector's shape (Number of terminals etc.), so check the position before inserting it.

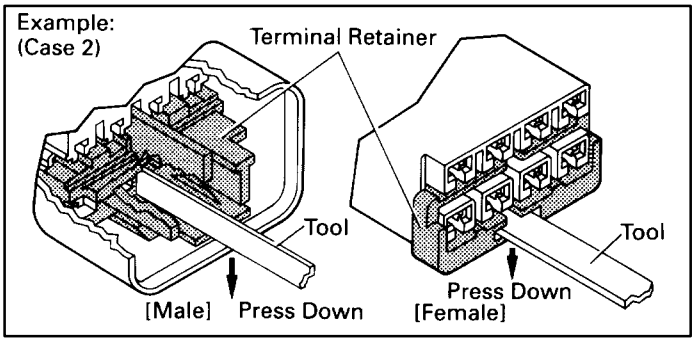

"Case 2"

Type which cannot be pulled as far as Power Lock insert the tool straight into the access hole of terminal retainer as shown.

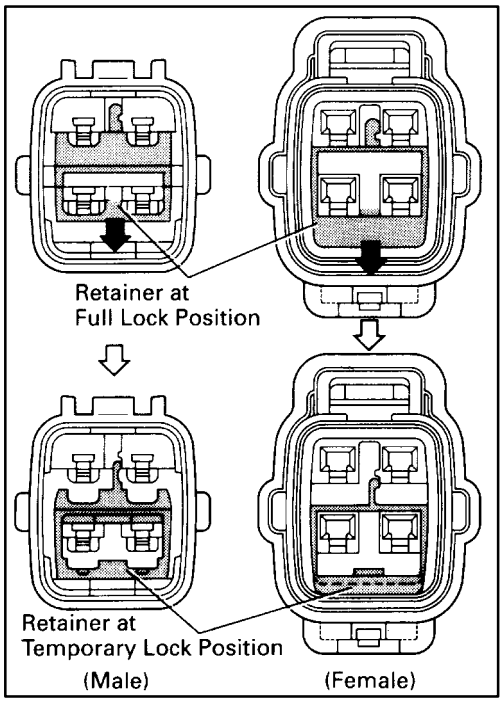

Push the terminal retainer down to the temporary lock position.

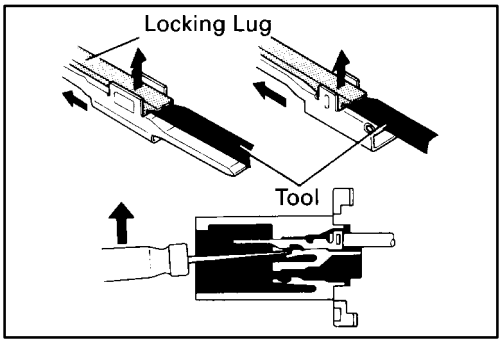

(c) Release the locking lug from terminal and pull the terminal out from rear.

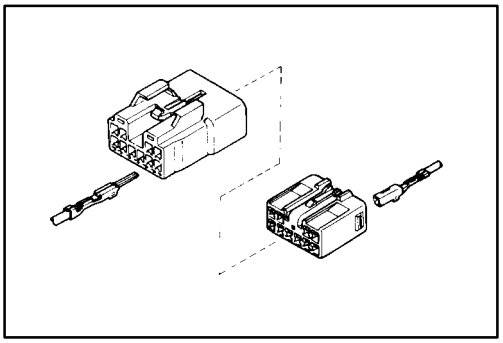

4. INSTALL TERMINAL TO CONNECTOR

(a) Insert the terminal.

HINT:

1. Make sure the terminal is positioned correctly.
2. Insert the terminal until the locking lug locks firmly.
3. Insert the terminal with terminal retainer in the temporary lock position.

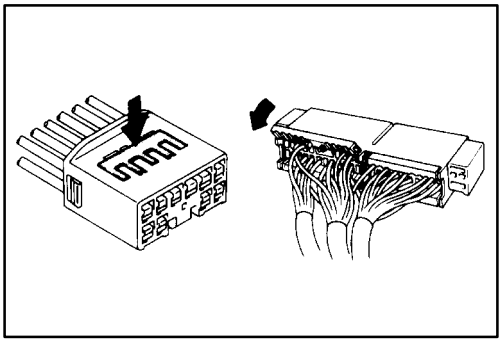

(b) Push the secondary locking device or terminal retainer in to the full lock position.

5. CONNECT CONNECTOR

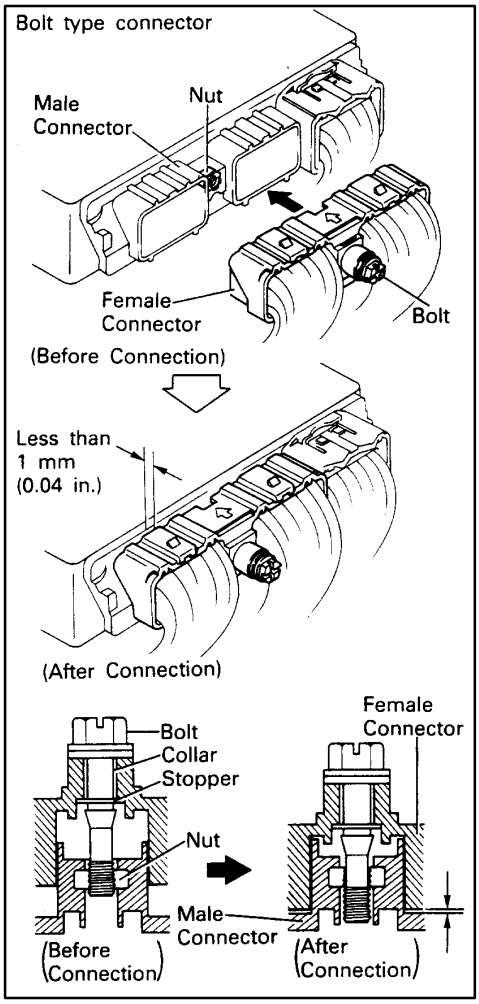

DISCONNECTION AND CONNECTION OF BOLT TYPE CONNECTORS

For engine control module (engine and electronically controlled transmission ECU) in this vehicle, connectors are used which require a bolt built into the connector to be screwed down to securely connect the connector.

1. Disconnect the connector

   After completely loosening the bolt, the two parts of the connector can be separated.

   NOTICE:

   Do not pull the wire harness when disconnecting the connector.

2. Connect the connector

   NOTICE:

   Before connecting the connector, always check that the terminals are not bent or damaged.

   (a) Match the guide section of the male connector correctly with the female connector, then press them together.

   (b) Tighten the bolt.

   Make sure the connectors are completely connected, by tightening the bolt until there is a clearance of less than 1 mm (0.04 in.) between the bottom of male connector and the end of female connector.

ABBREVIATIONS

The following abbreviations are used in this manual.

ABS	=	Anti–Lock Brake System	O/D	=	Overdrive
A/C	=	Air Conditioning	PPS	=	Progressive Power Steering
ACIS	=	Acoustic Control Induction System	R/B	=	Relay Block
A/T	=	Automatic Transmission	RH	=	Right–Hand
COMB.	=	Combination	SFI	=	Sequential Multiport Fuel Injection
ECU	=	Electronic Control Unit	SRS	=	Supplemental Restraint System
EFI	=	Electronic Fuel Injection	SW	=	Switch
EGR	=	Exhaust Gas Recirculation	TDCL	=	Total Diagnostic Communication Link
EVAP	=	Evaporative Emission	TEMP.	=	Temperature
ISC	=	Idle Speed Control	TRAC	=	Traction Control System
J/B	=	Junction Block	VSV	=	Vacuum Switching Valve
LH	=	Left-Hand	w/	=	With
M/T	=	Manual Transmission	w/o	=	Without

* The titles given inside the components are the names of the terminals (terminal codes) and are not treated as being abbreviations.

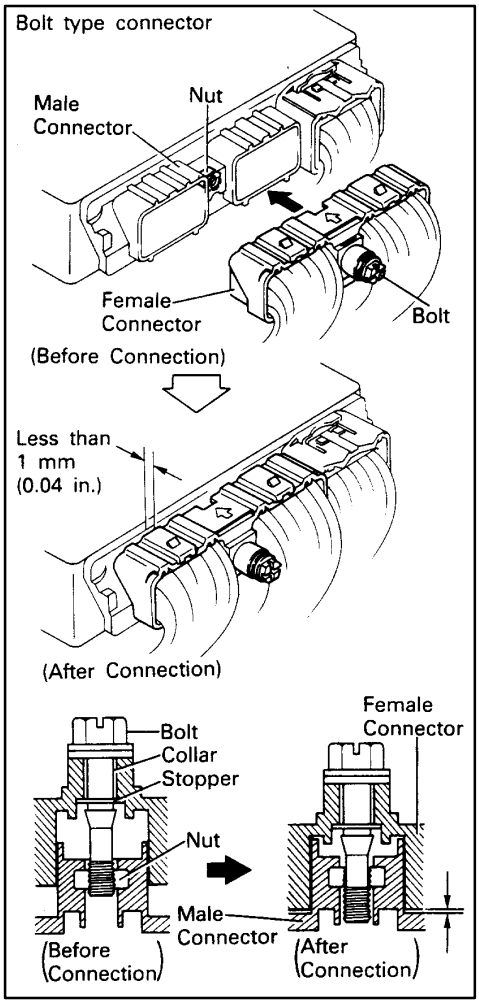

DISCONNECTION AND CONNECTION OF BOLT TYPE CONNECTORS

For engine control module (engine and electronically controlled transmission ECU) in this vehicle, connectors are used which require a bolt built into the connector to be screwed down to securely connect the connector.

1. Disconnect the connector

   After completely loosening the bolt, the two parts of the connector can be separated.

   NOTICE:

   Do not pull the wire harness when disconnecting the connector.

2. Connect the connector

   NOTICE:

   Before connecting the connector, always check that the terminals are not bent or damaged.

   (a) Match the guide section of the male connector correctly with the female connector, then press them together.

   (b) Tighten the bolt.

   Make sure the connectors are completely connected, by tightening the bolt until there is a clearance of less than 1 mm (0.04 in.) between the bottom of male connector and the end of female connector.

ABBREVIATIONS

The following abbreviations are used in this manual.

ABS	=	Anti–Lock Brake System	O/D	=	Overdrive
A/C	=	Air Conditioning	PPS	=	Progressive Power Steering
ACIS	=	Acoustic Control Induction System	R/B	=	Relay Block
A/T	=	Automatic Transmission	RH	=	Right–Hand
COMB.	=	Combination	SFI	=	Sequential Multiport Fuel Injection
ECU	=	Electronic Control Unit	SRS	=	Supplemental Restraint System
EFI	=	Electronic Fuel Injection	SW	=	Switch
EGR	=	Exhaust Gas Recirculation	TDCL	=	Total Diagnostic Communication Link
EVAP	=	Evaporative Emission	TEMP.	=	Temperature
ISC	=	Idle Speed Control	TRAC	=	Traction Control System
J/B	=	Junction Block	VSV	=	Vacuum Switching Valve
LH	=	Left-Hand	w/	=	With
M/T	=	Manual Transmission	w/o	=	Without

* The titles given inside the components are the names of the terminals (terminal codes) and are not treated as being abbreviations.

GLOSSARY OF TERMS AND SYMBOLS

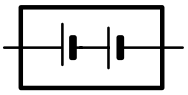

BATTERY

Stores chemical energy and converts it into electrical energy. Provides DC current for the auto's various electrical circuits.



CAPACITOR (Condenser)

A small holding unit for temporary storage of electrical voltage.



CIGARETTE LIGHTER

An electric resistance heating element.

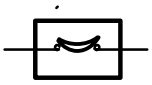

CIRCUIT BREAKER

Basically a reusable fuse, a circuit breaker will heat and open if too much current flows through it. Some units automatically reset when cool, others must be manually reset.



DIODE

A semiconductor which allows current flow in only one direction.



DIODE, ZENER

A diode which allows current flow in one direction but blocks reverse flow only up to a specific voltage. Above that potential, it passes the excess voltage. This acts as a simple voltage regulator.



DISTRIBUTOR, IIA

Channels high–voltage current from the ignition coil to the individual spark plugs.



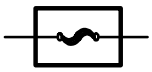

(for Medium Current Fuse)

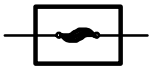

(for High Current Fuse or Fusible Link.)

FUSE

A thin metal strip which burns through when too much current flows through it, thereby stopping current flow and protecting a circuit from damage.

FUSIBLE LINK

A heavy–gauge wire placed in high amperage circuits which burns through on overloads, thereby protecting the circuit. The numbers indicate the cross–section surface area of the wires.



GROUND

The point at which wiring attaches to the Body, thereby providing a return path for an electrical circuit; without a ground, current cannot flow.

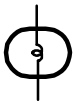

HEADLIGHTS

1. SINGLE FILAMENT

Current flow causes a headlight filament to heat up and emit light. A headlight may have either a single (1) filament or a double (2) filament.



2. DOUBLE FILAMENT



HORN

An electric device which sounds a loud audible signal.

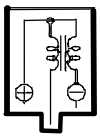

IGNITION COIL

Converts low–voltage DC current into high–voltage ignition current for firing the spark plugs.



LIGHT

Current flow through a filament causes the filament to heat up and emit light.



LED (LIGHT EMITTING DIODE)

Upon current flow, these diodes emit light without producing the heat of a comparable light.



METER, ANALOG

Current flow activates a magnetic coil which causes a needle to move, thereby providing a relative display against a background calibration.



METER, DIGITAL

Current flow activates one or many LED's, LCD's, or fluorescent displays, which provide a relative or digital display.



MOTOR

A power unit which converts electrical energy into mechanical energy, especially rotary motion.

RELAY

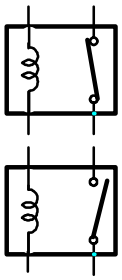

1. NORMALLY CLOSED

2. NORMALLY OPEN

Basically, an electrically operated switch which may be normally closed (1) or open (2).

Current flow through a small coil creates a magnetic field which either opens or closes an attached switch.

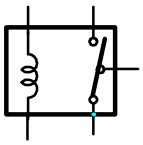

RELAY, DOUBLE THROW

A relay which passes current through one set of contacts or the other.



RESISTOR

An electrical component with a fixed resistance, placed in a circuit to reduce voltage to a specific value.



RESISTOR, TAPPED

A resistor which supplies two or more different non adjustable resistance values.

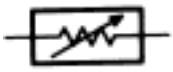

RESISTOR, VARIABLE or RHEOSTAT

A controllable resistor with a variable rate of resistance. Also called a potentiometer or rheostat.

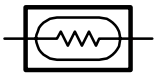

SENSOR (Thermistor)

A resistor which varies its resistance with temperature.



SENSOR, ANALOG SPEED

Uses magnetic impulses to open and close a switch to create a signal for activation of other components.

SHORT PIN

Used to provide an unbroken connection within a junction block.



SOLENOID

An electromagnetic coil which forms a magnetic field when current flows, to move a plunger, etc.



SPEAKER

An electromechanical device which creates sound waves from current flow.

SWITCH, MANUAL

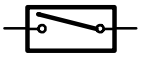

1. NORMALLY OPEN

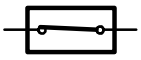

2. NORMALLY CLOSED

Opens and closes circuits, thereby stopping (1) or allowing (2) current flow.

SWITCH, DOUBLE THROW

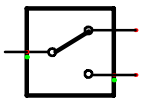

A switch which continuously passes current through one set of contacts or the other.

SWITCH, IGNITION

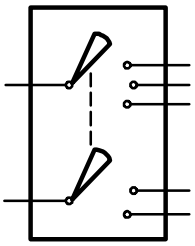

A key operated switch with several positions which allows various circuits, particularly the primary ignition circuit, to become operational.

SWITCH, WIPER PARK

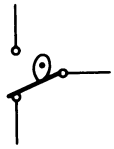

Automatically returns wipers to the stop position when the wiper switch is turned off.

TRANSISTOR

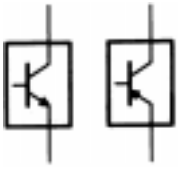

A solidstate device typically used as an electronic relay; stops or passes current depending on the voltage applied at “base.”

WIRES



(1) NOT CONNECTED

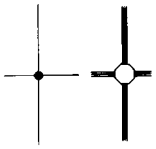

(2) SPLICED

Wires are always drawn as straight lines on wiring diagrams. Crossed wires (1) without a black dot at the junction are not joined; crossed wires (2) with a black dot or octagonal (◯) mark at the junction are spliced (joined) connections.

RELAY LOCATIONS

[Engine Compartment]

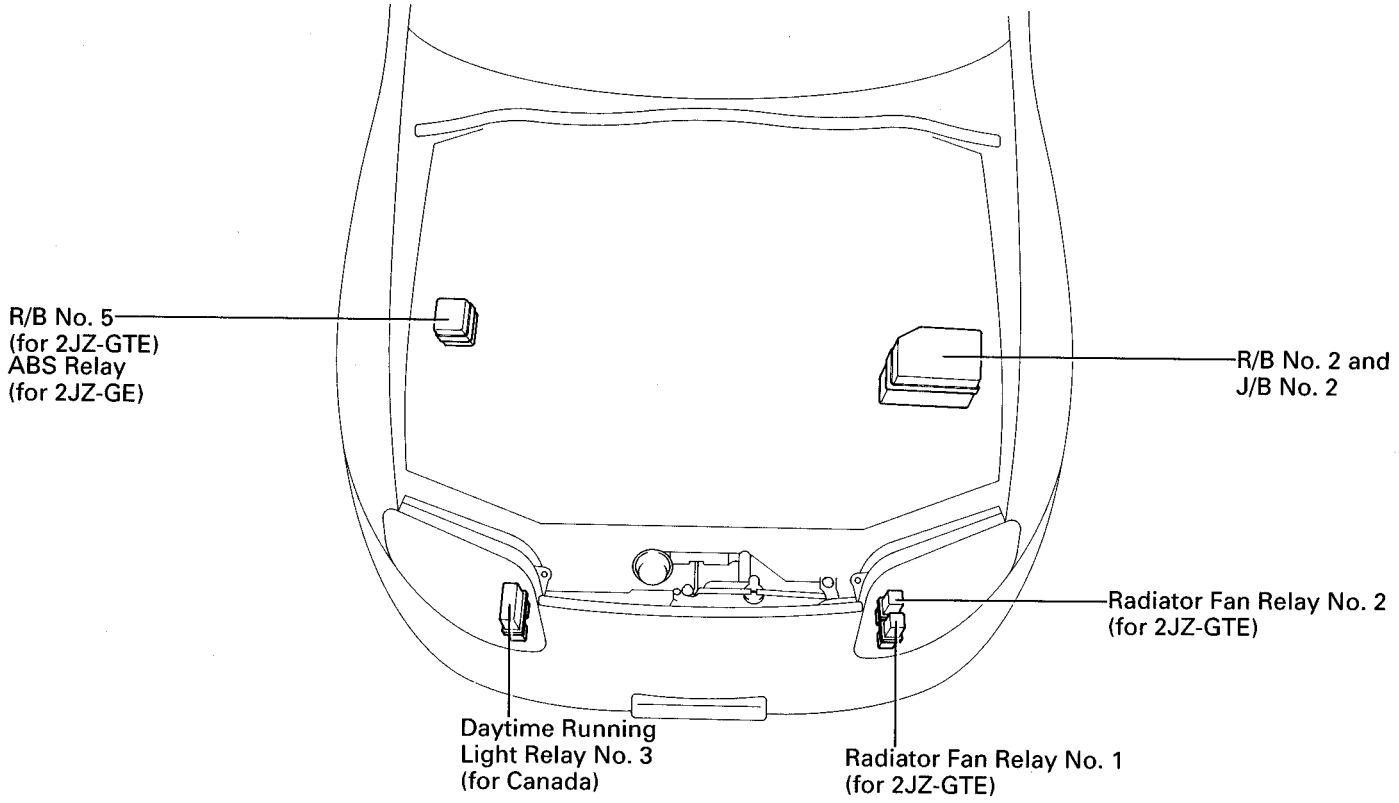

[Instrument Panel]

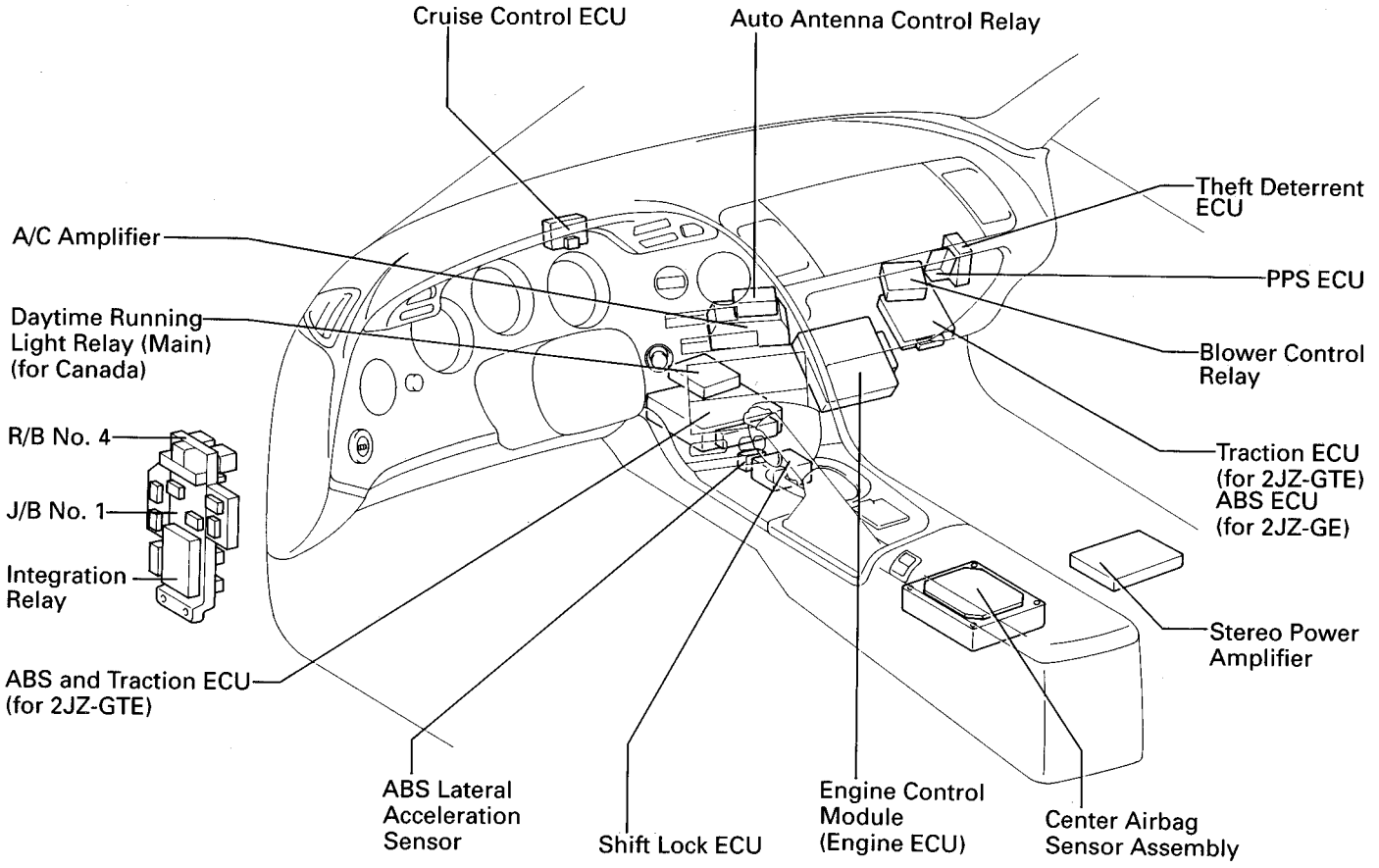

[Body]

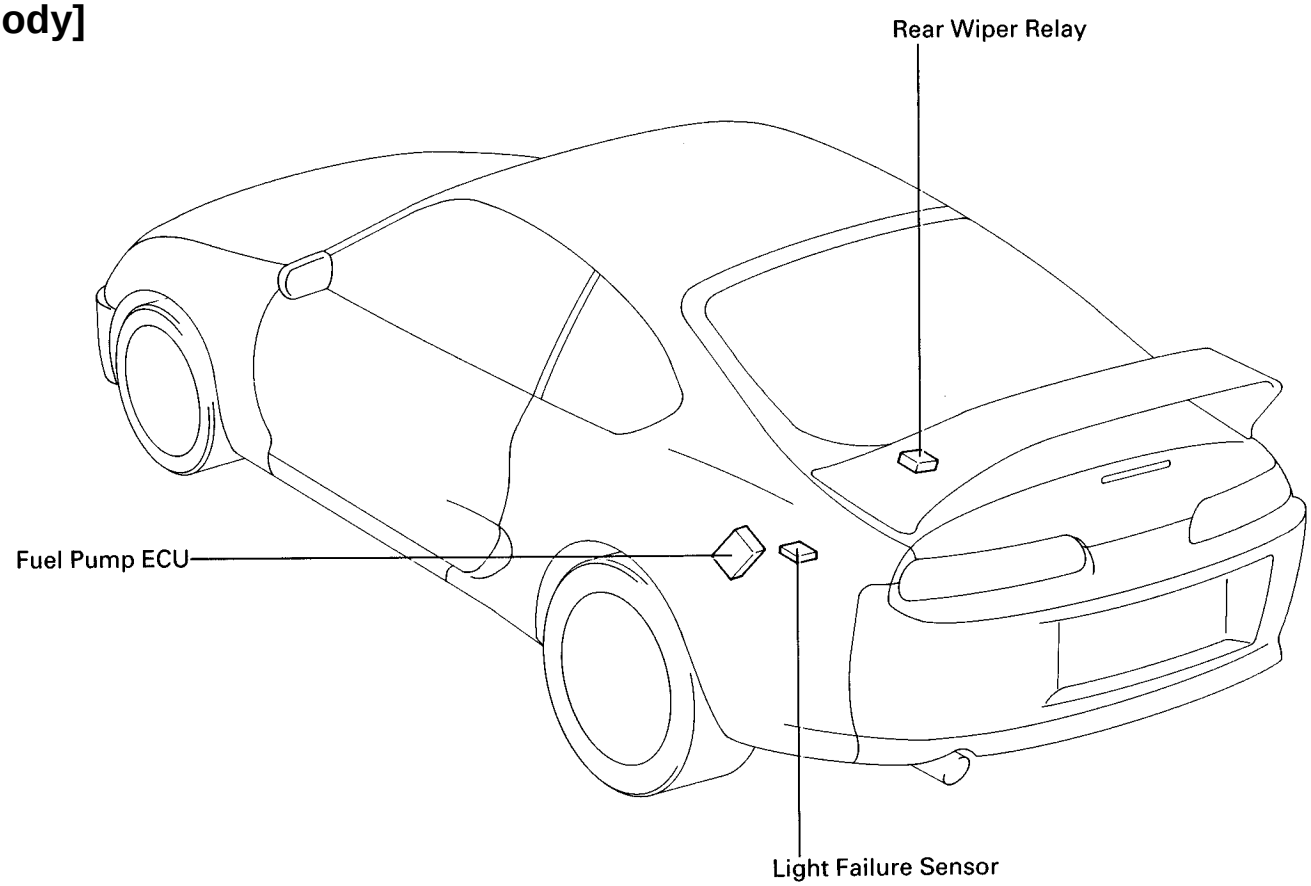
Rear Wiper Relay
Fuel Pump ECU
Light Failure Sensor

[Seat]

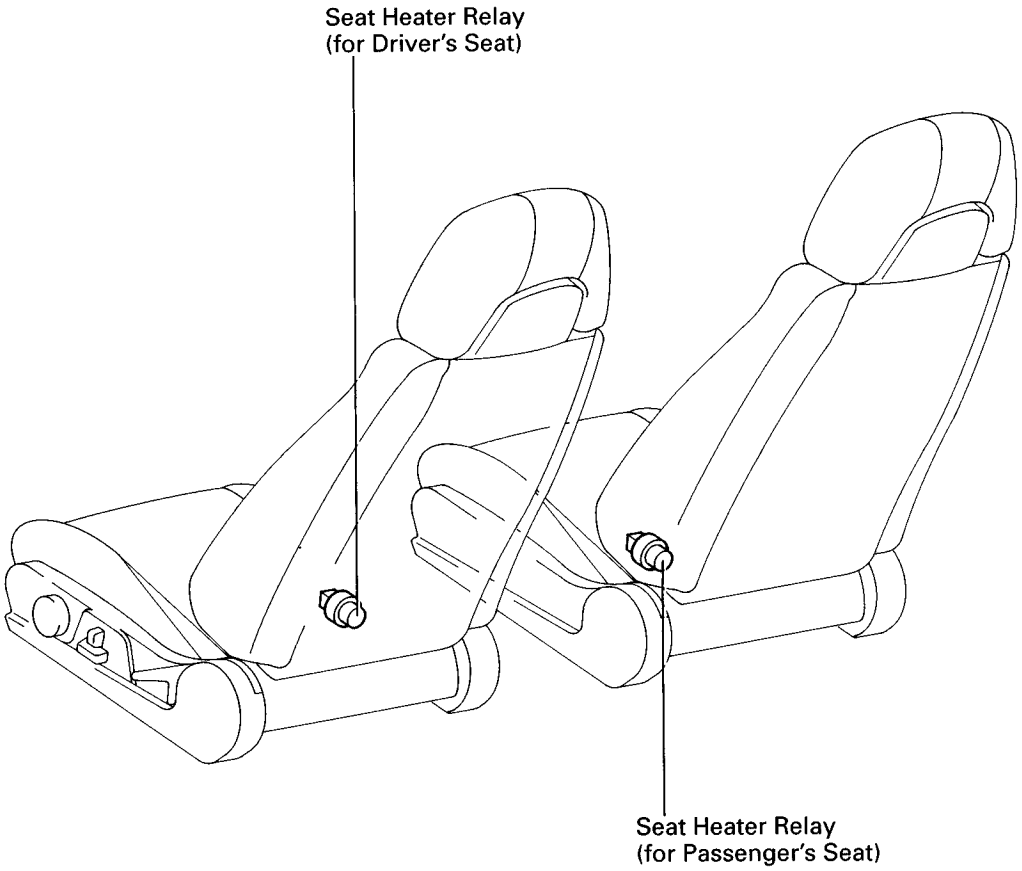
Seat Heater Relay
(for Driver's Seat)
Seat Heater Relay
(for Passenger's Seat)

RELAY LOCATIONS

⬭ : J/B No. 1	**Left Kick Panel** (See Page 18)

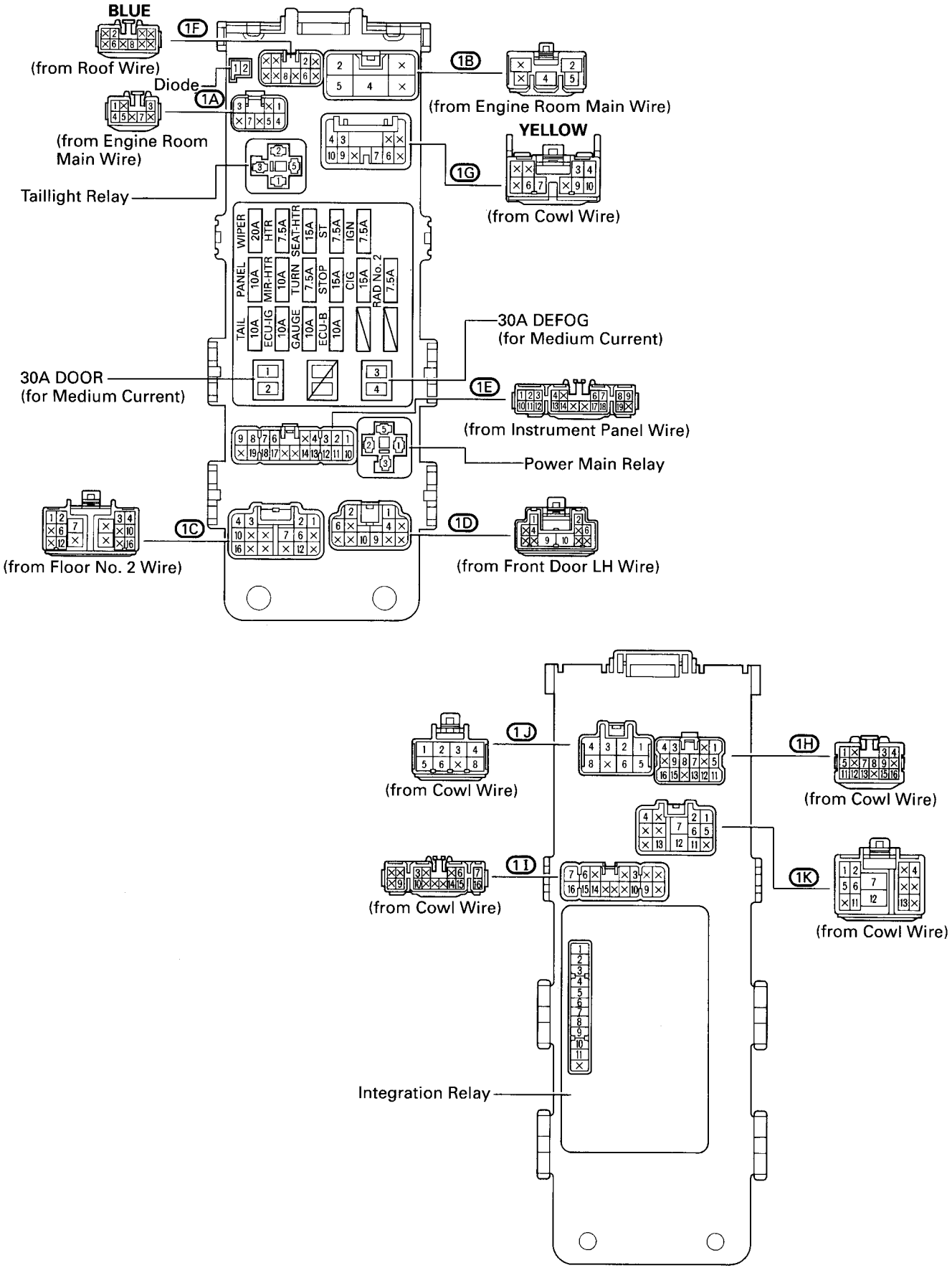

[J/B No. 1 Inner Circuit]

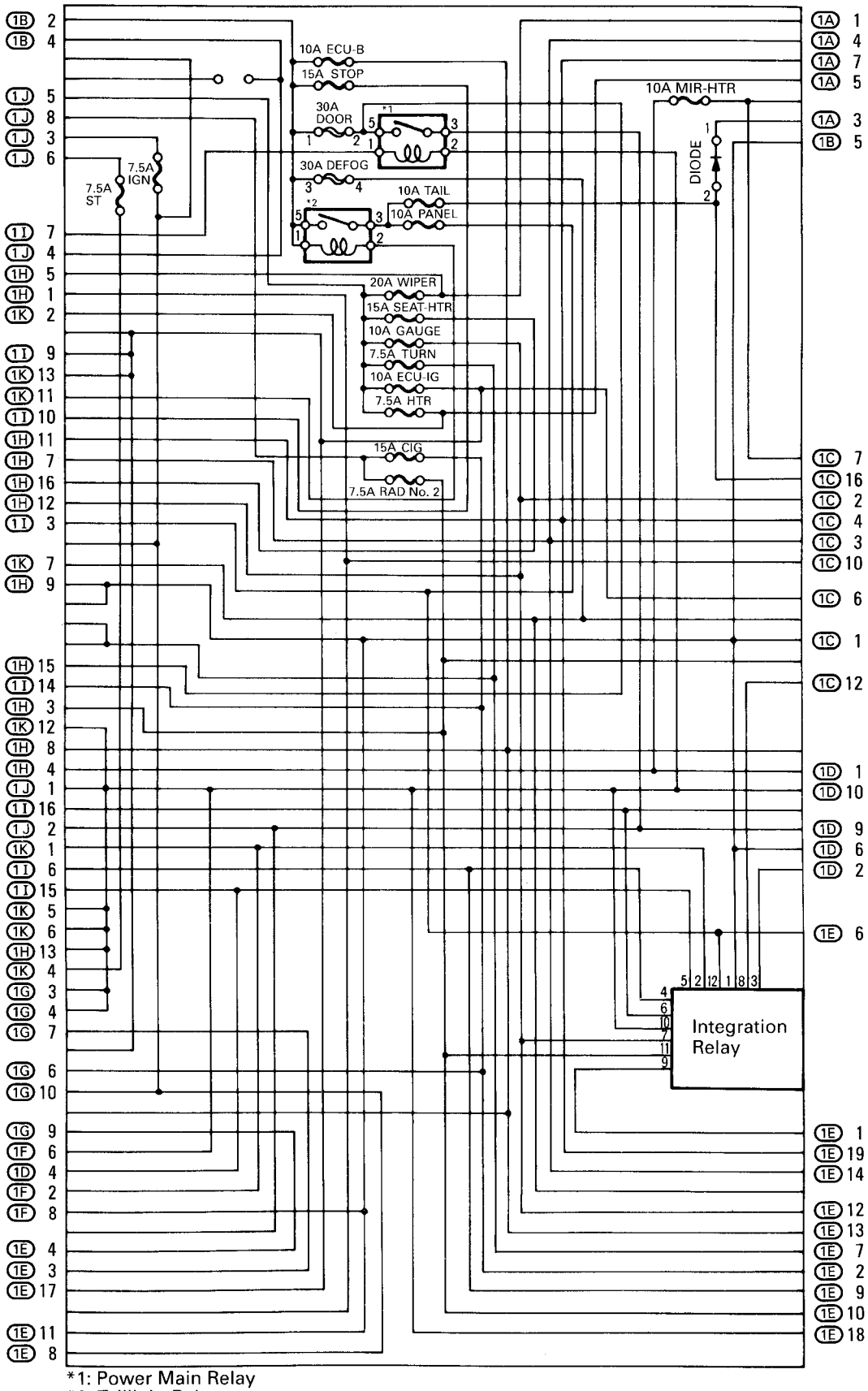

*1: Power Main Relay
*2: Taillight Relay

RELAY LOCATIONS

② : R/B No. 2 ⬭ : J/B No. 2	**Engine Compartment Left** (See Page 18)

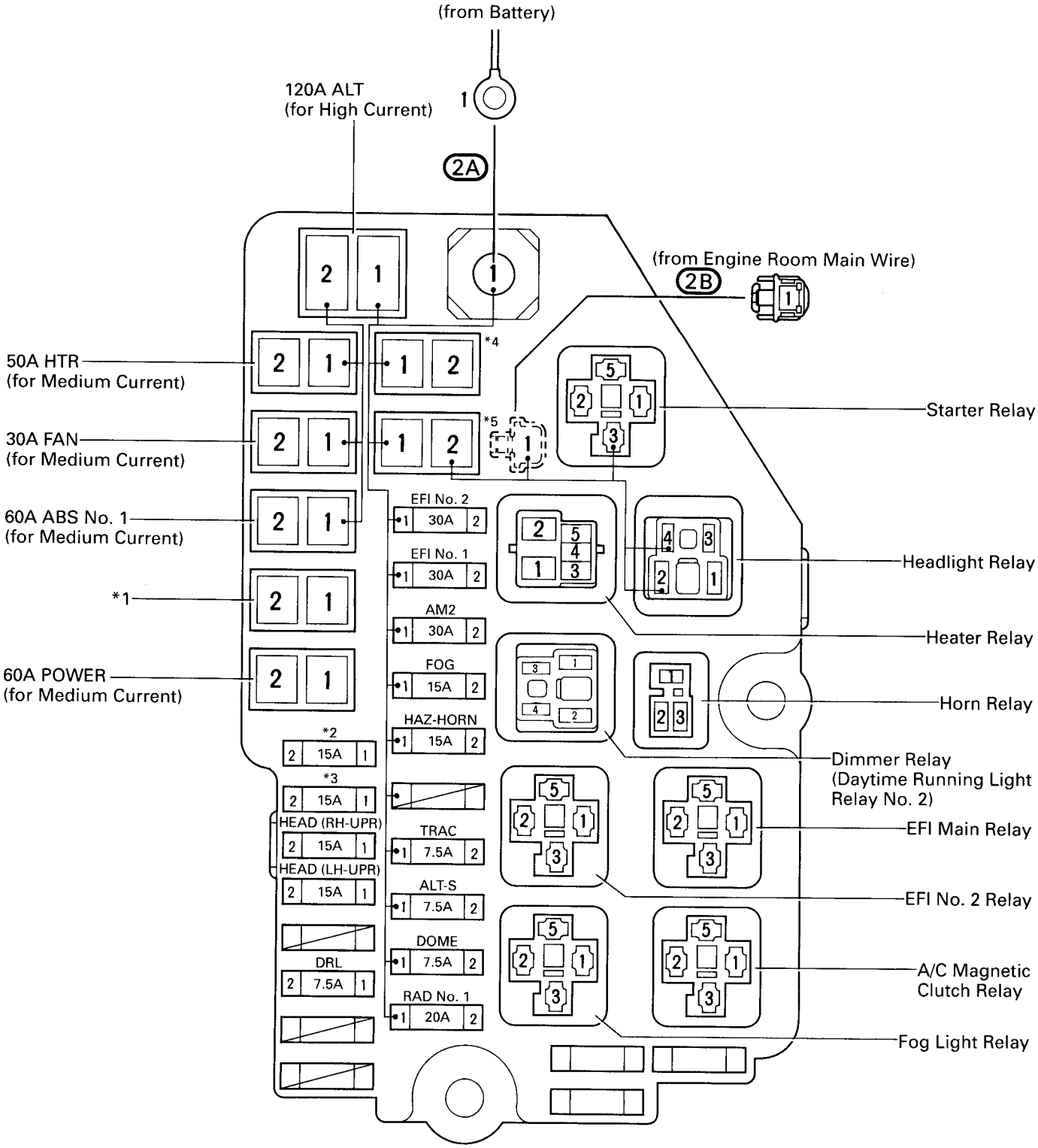

*1: { 50A AM1 (for Medium Current) (for USA)
60A AM1 (for Medium Current) (for CANADA)

*2: { HEAD (RH) (for USA)
HEAD (RH-LWR) (for CANADA)

*3: { HEAD (LH) (for USA)
HEAD (LH-LWR) (for CANADA)

*4: 30A ABS No. 2
(for Medium Current)

*5: 50A MAIN
(for Medium Current)

④ : R/B No. 4	Left Kick Panel (See Page 18)

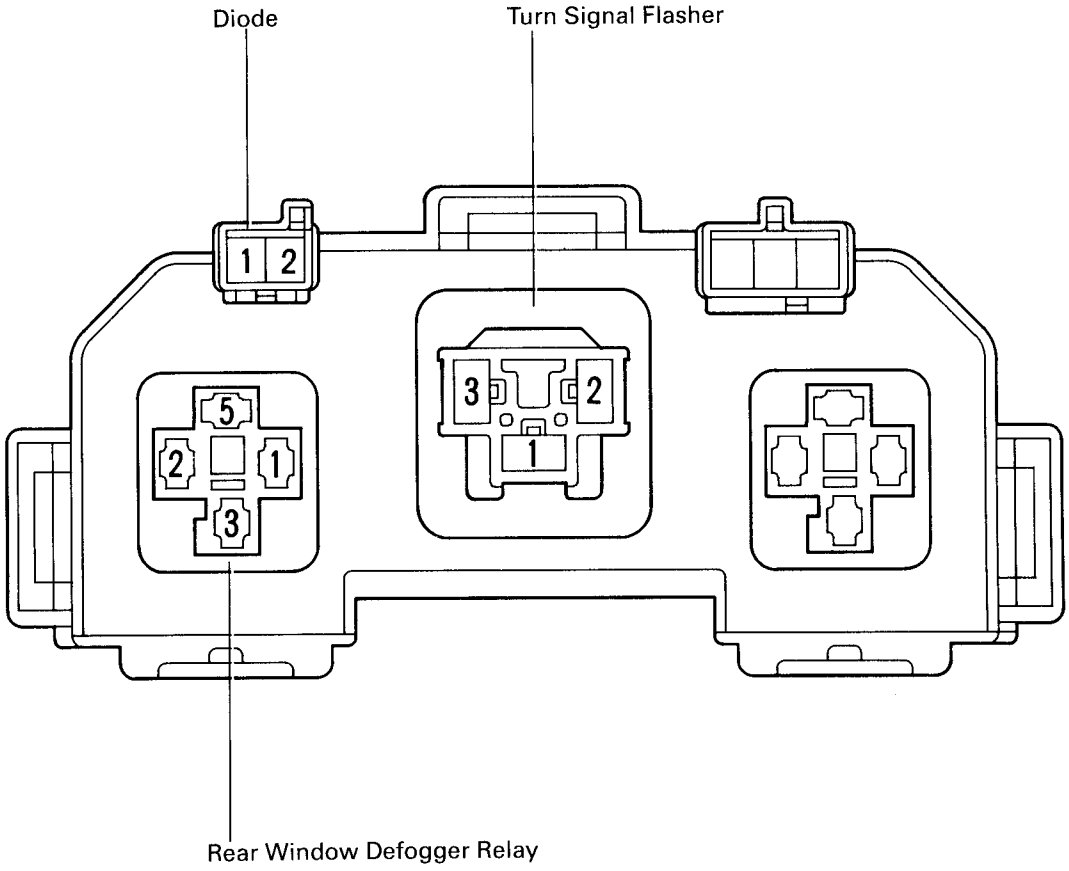

⑤ : R/B No. 5	Engine Compartment Right (See Page 18)

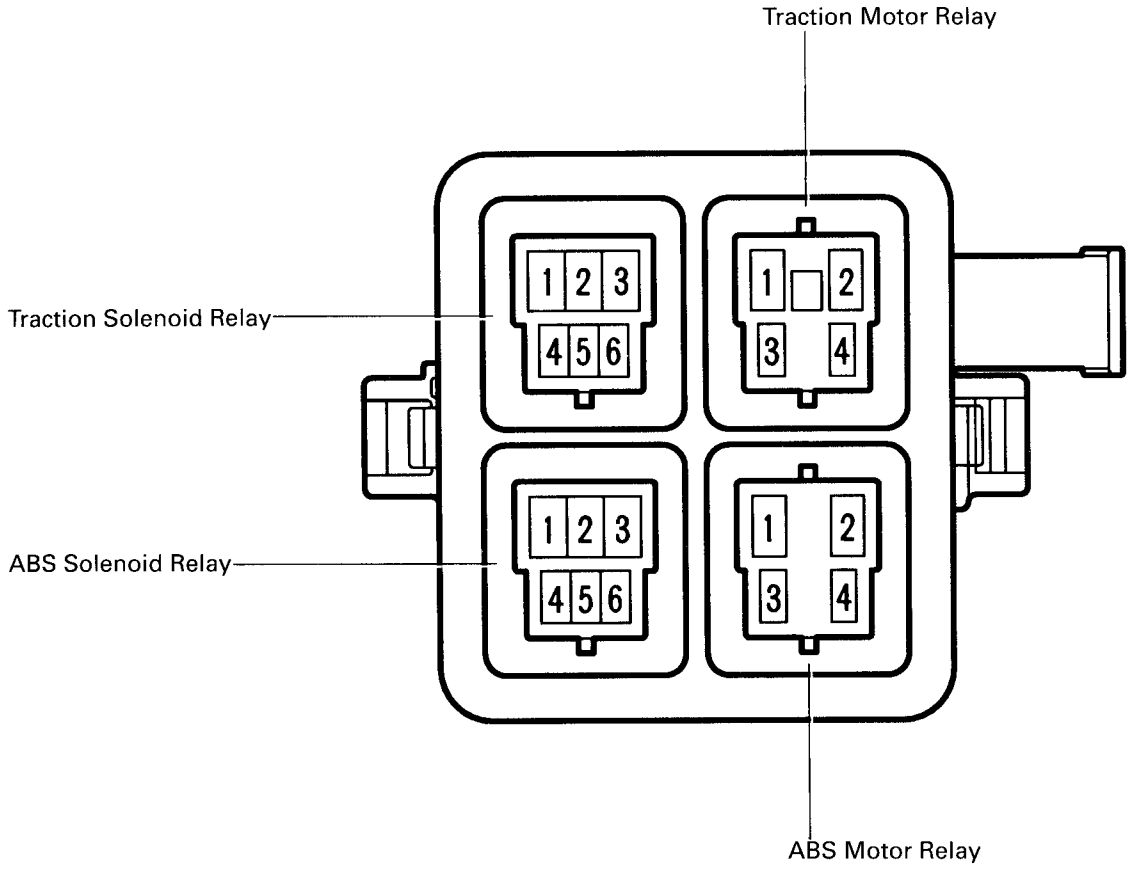

Position of Parts in Engine Compartment

[2JZ–GTE]

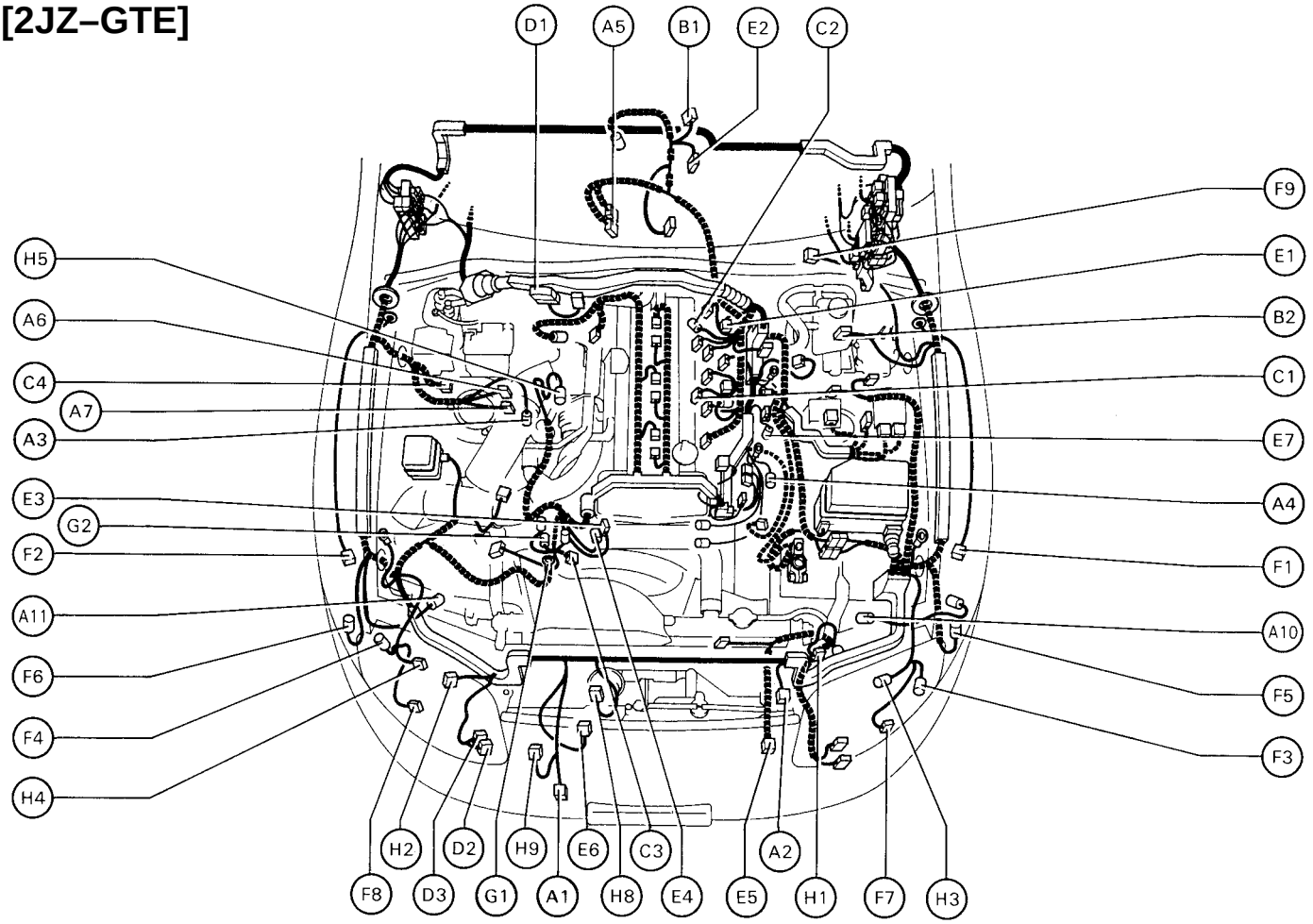

A 1 A/C Ambient Temp. Sensor
A 2 A/C Condenser Fan Motor
A 3 A/C Triple Pressure SW (A/C Dual and Single Pressure SW)
A 4 A/C Magnetic Clutch and Lock Sensor
A 5 A/T Fluid Temp. Sensor
A 6 ABS Actuator
A 7 ABS Actuator
A 10 ABS Speed Sensor Front LH
A 11 ABS Speed Sensor Front RH

B 1 Back–Up Light SW (for M/T)
B 2 Brake Fluid Level Warning SW

C 1 Camshaft Position Sensor No. 1
C 2 Camshaft Position Sensor No. 2
C 3 Crankshaft Position Sensor
C 4 Cruise Control Actuator

D 1 Data Link Connector 1 (Check Connector)
D 2 Daytime Running Light Relay No. 3
D 3 Daytime Running Light Relay No. 3

E 1 EGR Gas Temp. Sensor
E 2 Electronically Controlled Transmission Solenoid
E 3 Engine Coolant Temp. Sensor (EFI Water Temp. Sensor)
E 4 Engine Coolant Temp. Sender (Water Temp. Sender)
E 5 Engine Coolant Temp. SW (Water Temp. SW)
E 6 Engine Hood Courtesy SW
E 7 Engine Oil Level Sensor

F 1 Front Airbag Sensor LH
F 2 Front Airbag Sensor RH
F 3 Front Fog Light and Parking Light LH
F 4 Front Fog Light and Parking Light RH
F 5 Front Side Marker Light LH
F 6 Front Side Marker Light RH
F 7 Front Turn Signal Light LH
F 8 Front Turn Signal Light RH
F 9 Front Wiper Motor

G 1 Generator (Alternator)
G 2 Generator (Alternator)

H 1 Headlight Hi LH
H 2 Headlight Hi RH
H 3 Headlight Lo LH
H 4 Headlight Lo RH
H 5 Heated Oxygen Sensor (Main)
H 8 Horn LH
H 9 Horn RH

Position of Parts in Engine Compartment

[2JZ–GTE]

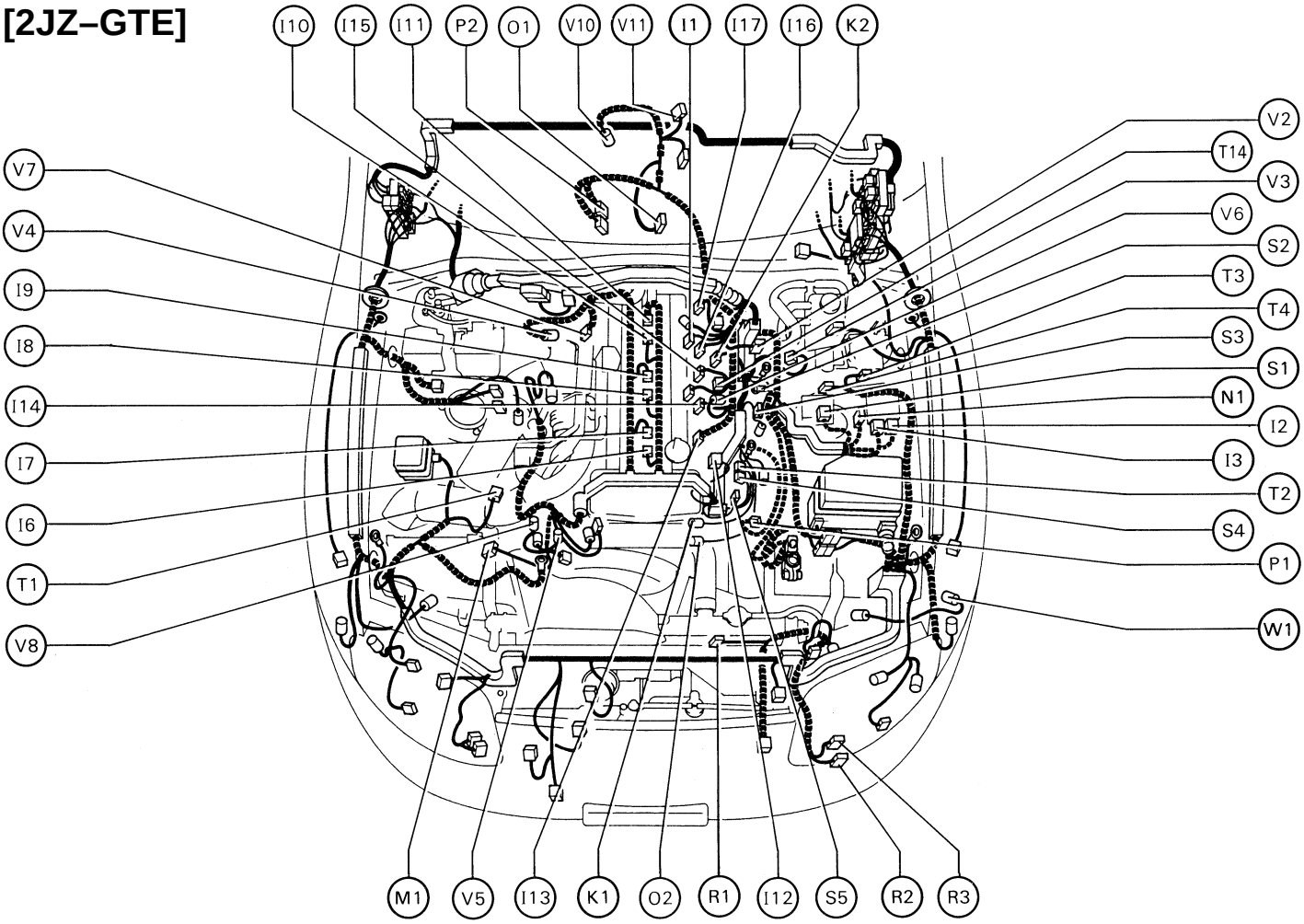

I 1 Idle Air Control Valve (ISC Valve)
I 2 Igniter
I 3 Igniter
I 6 Ignition Coil No. 1
I 7 Ignition Coil No. 2
I 8 Ignition Coil No. 3
I 9 Ignition Coil No. 4
I 10 Ignition Coil No. 5
I 11 Ignition Coil No. 6
I 12 Injector No. 1
I 13 Injector No. 2
I 14 Injector No. 3
I 15 Injector No. 4
I 16 Injector No. 5
I 17 Injector No. 6

K 1 Knock Sensor (on Front Side)
K 2 Knock Sensor (on Rear Side)

M 1 Mass Air Flow (Air Flow Meter)

N 1 Noise Filter

O 1 O/D Direct Clutch Speed Sensor
O 2 Oil Pressure SW

P 1 PPS Solenoid
P 2 Park/Neutral Position SW (Neutral Start SW), Back–Up Light SW and A/T Indicator Light SW (for A/T)

R 1 Radiator Fan Motor
R 2 Radiator Fan Relay No. 1
R 3 Radiator Fan Relay No. 2

S 1 SFI Resistor (EFI Resistor)
S 2 Starter
S 3 Starter
S 4 Sub Throttle Actuator
S 5 Sub Throttle Position Sensor

T 1 Theft Deterrent Horn
T 2 Throttle Position Sensor
T 3 Traction Brake Actuator
T 4 Traction Pump and Motor
T 14 Turbo Pressure Sensor

V 2 VSV (for EGR)
V 3 VSV (for EVAP)
V 4 VSV (for Exhaust Bypass Valve)
V 5 VSV (for Exhaust Gas Control Valve)
V 6 VSV (for Fuel Pressure Up)
V 7 VSV (for Intake Air Control Valve)
V 8 VSV (for Waste Gate Valve)
V 10 Vehicle Speed Sensor (Speed Sensor) No. 1 (for Combination Meter)
V 11 Vehicle Speed Sensor (Speed Sensor) No. 2 (for Electronically Controlled Transmission)

W 1 Washer Motor

Position of Parts in Engine Compartment

[2JZ–GE]

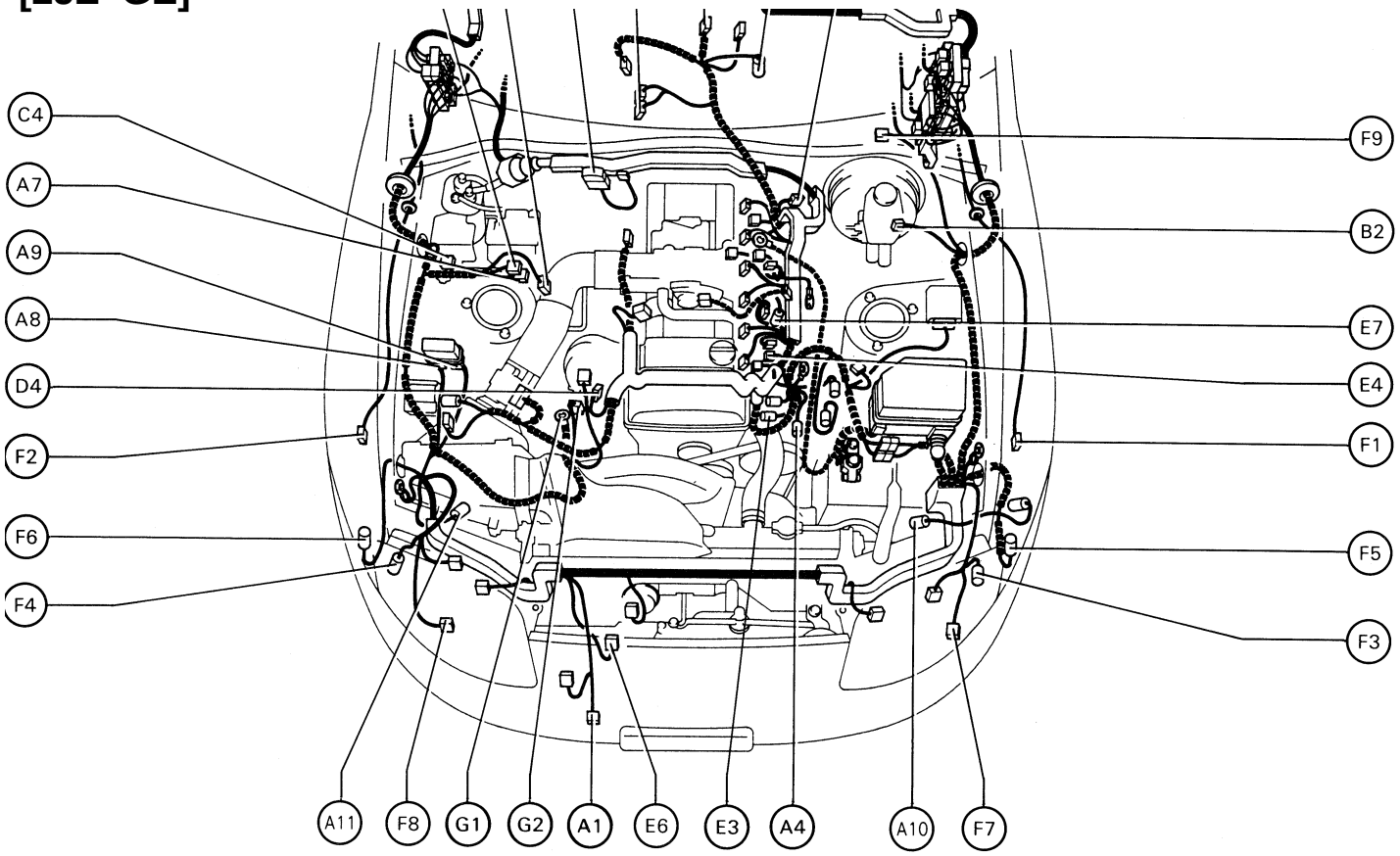

A 1 A/C Ambient Temp. Sensor
A 3 A/C Dual Pressure SW
A 4 A/C Magnetic Clutch and Lock Sensor
A 5 A/T Fluid Temp. Sensor
A 6 ABS Actuator
A 7 ABS Actuator
A 8 ABS Relay
A 9 ABS Relay
A 10 ABS Speed Sensor Front LH
A 11 ABS Speed Sensor Front RH

B 1 Back-Up Light SW (for M/T)
B 2 Brake Fluid Level Warning SW

C 4 Cruise Control Actuator

D 1 Data Link Connector 1 (Check Connector)
D 4 Distributor

E 1 EGR Gas Temp. Sensor
E 2 Electronically Controlled Transmission Solenoid
E 3 Engine Coolant Temp. Sensor (EFI Water Temp. Sensor)
E 4 Engine Coolant Temp. Sender (Water Temp. Sender)
E 6 Engine Hood Courtesy SW
E 7 Engine Oil Level Sensor

F 1 Front Airbag Sensor LH
F 2 Front Airbag Sensor RH
F 3 Front Fog Light and Parking Light LH
F 4 Front Fog Light and Parking Light RH
F 5 Front Side Marker Light LH
F 6 Front Side Marker Light RH
F 7 Front Turn Signal Light LH
F 8 Front Turn Signal Light RH
F 9 Front Wiper Motor

G 1 Generator (Alternator)
G 2 Generator (Alternator)

Position of Parts in Engine Compartment

[2JZ–GE]

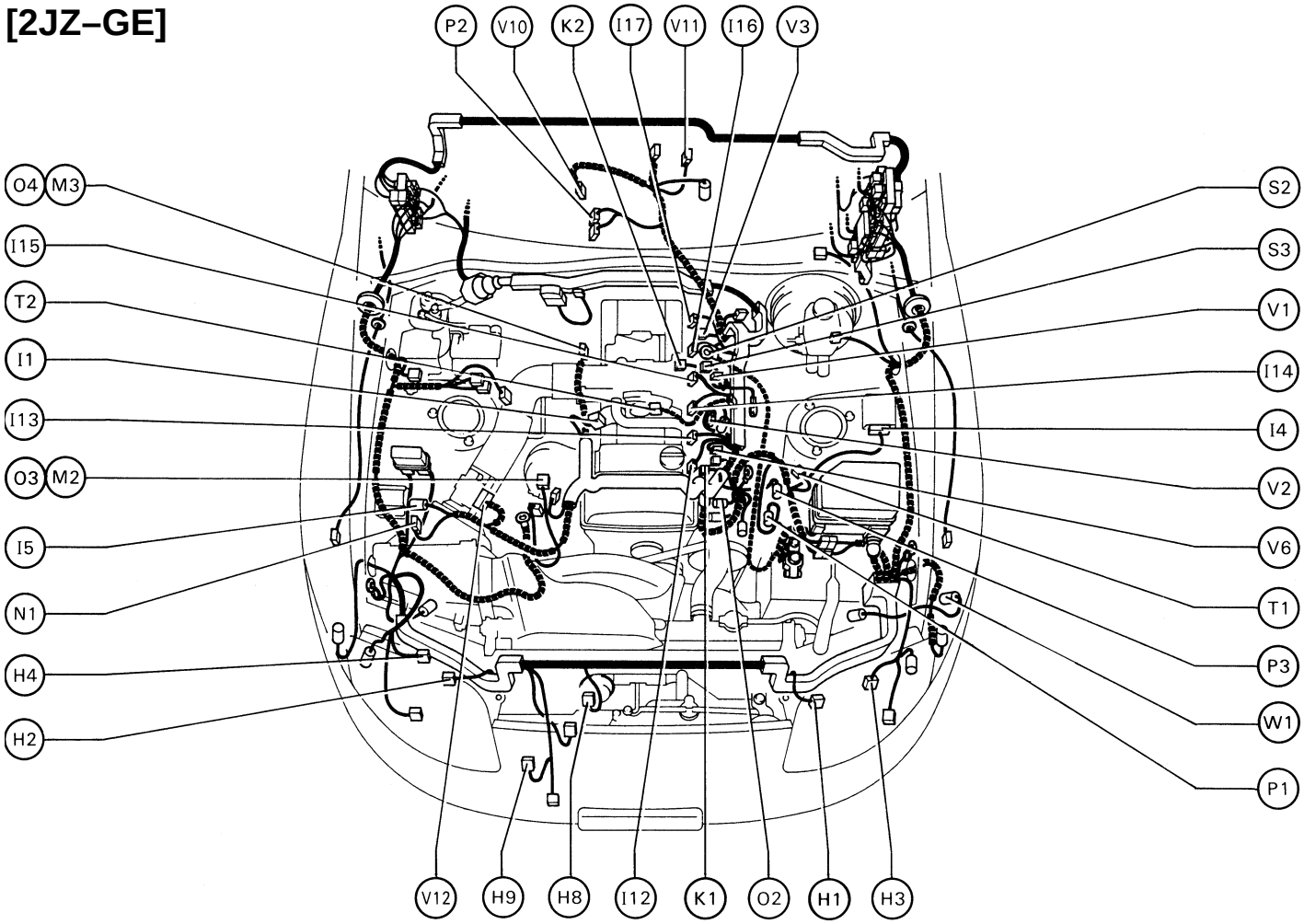

H 1 Headlight Hi LH
H 2 Headlight Hi RH
H 3 Headlight Lo LH
H 4 Headlight Lo RH
H 8 Horn LH
H 9 Horn RH

I 1 Idle Air Control Valve (ISC Valve)
I 4 Igniter
I 5 Ignition Coil
I 12 Injector No. 1
I 13 Injector No. 2
I 14 Injector No. 3
I 15 Injector No. 4
I 16 Injector No. 5
I 17 Injector No. 6

K 1 Knock Sensor (on Front Side)
K 2 Knock Sensor (on Rear Side)

M 2 Main Heated Oxygen Sensor (for California on Front Side)
M 3 Main Heated Oxygen Sensor (for California on Rear Side)

N 1 Noise Filter

O 2 Oil Pressure SW
O 3 Oxygen Sensor (Except California on Front Side)
O 4 Oxygen Sensor (Except California on Rear Side)

P 1 PPS Solenoid
P 2 Park/Neutral Position SW (Neutral Start SW), Back–Up Light SW and A/T Indicator Light SW (for A/T)
P 3 Power Steering Pressure SW

S 2 Starter
S 3 Starter

T 1 Theft Deterrent Horn
T 2 Throttle Position Sensor

V 1 VSV (for ACIS)
V 2 VSV (for EGR)
V 3 VSV (for EVAP)
V 6 VSV (for Fuel Pressure Up)
V 10 Vehicle Speed Sensor (Speed Sensor) No. 1 (for Combination Meter)
V 11 Vehicle Speed Sensor (Speed Sensor) No. 2 (for Electronically Controlled Transmission)
V 12 Volume Air Flow (Air Flow Meter)

W 1 Washer Motor

Position of Parts in Instrument Panel

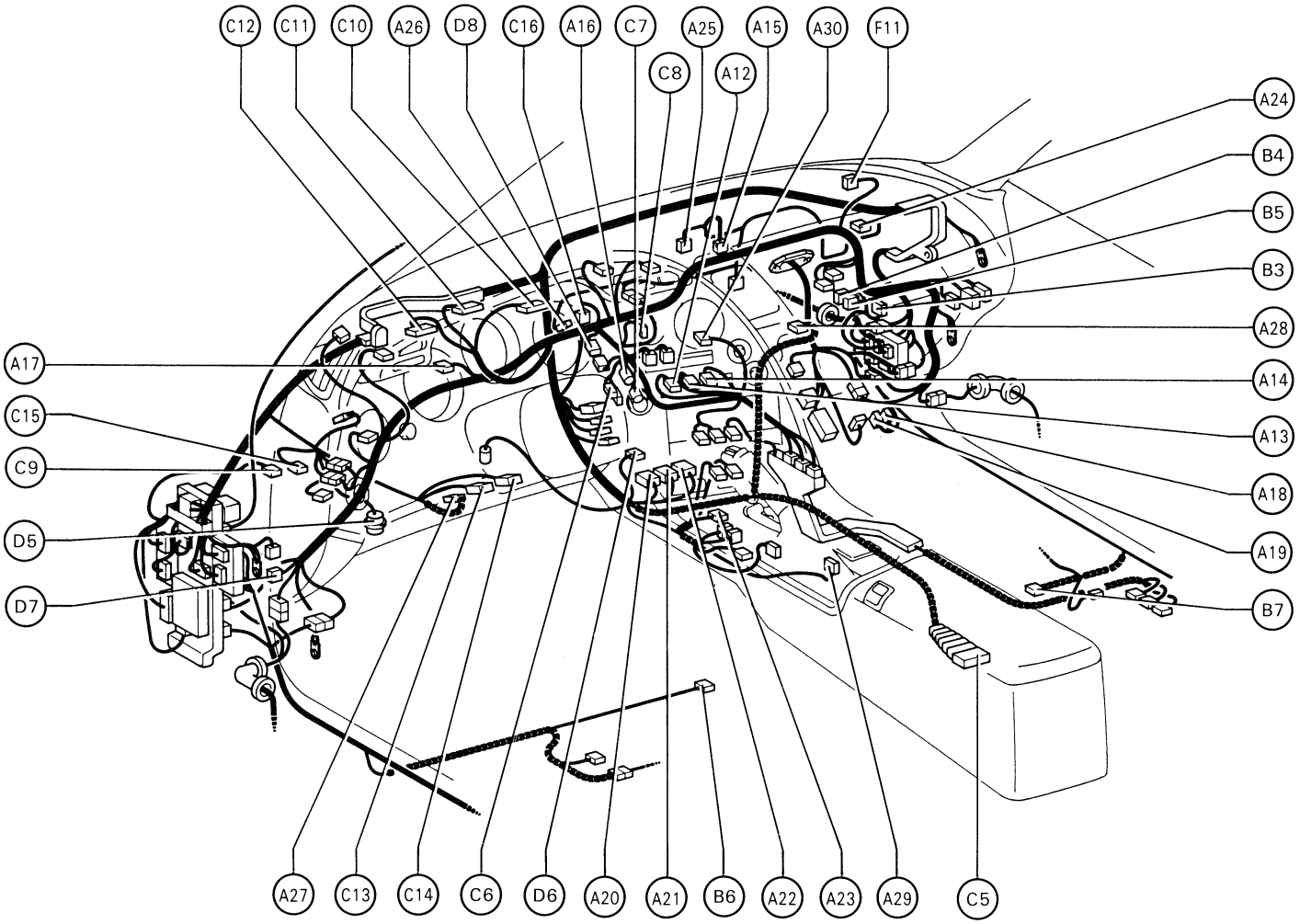

A 12 A/C Amplifier
A 13 A/C Amplifier
A 14 A/C Amplifier
A 15 A/C Evaporator Temp. Sensor
A 16 A/C Room Temp. Sensor
A 17 A/C Solar Sensor
A 18 ABS ECU
A 19 ABS ECU
A 20 ABS and Traction ECU
A 21 ABS and Traction ECU
A 22 ABS and Traction ECU
A 23 ABS Lateral Acceleration Sensor
A 24 Air Inlet Control Servo Motor
A 25 Air Mix Control Servo Motor
A 26 Air Vent Mode Control Servo Motor
A 27 Airbag Squib (Steering Wheel Pad)
A 28 Airbag Squib (Front Passenger Airbag Assembly)
A 29 Ashtray Illumination
A 30 Auto Antenna Control Relay

B 3 Blower Motor
B 4 Blower Motor Control Relay
B 5 Blower Motor Control Relay
B 6 Buckle SW LH
B 7 Buckle SW RH

C 5 Center Airbag Sensor Assembly
C 6 Cigarette Lighter
C 7 Cigarette Lighter Illumination
C 8 Clock
C 9 Clutch Start SW
C 10 Combination Meter
C 11 Combination Meter
C 12 Combination Meter
C 13 Combination SW
C 14 Combination SW
C 15 Cruise Control Clutch SW
C 16 Cruise Control ECU

D 5 Data Link Connector 2 (TDCL)
D 6 Daytime Running Light Relay (Main)
D 7 Diode (for Interior Light)
D 8 Diode (for Idle-Up)

Position of Parts in Instrument Panel

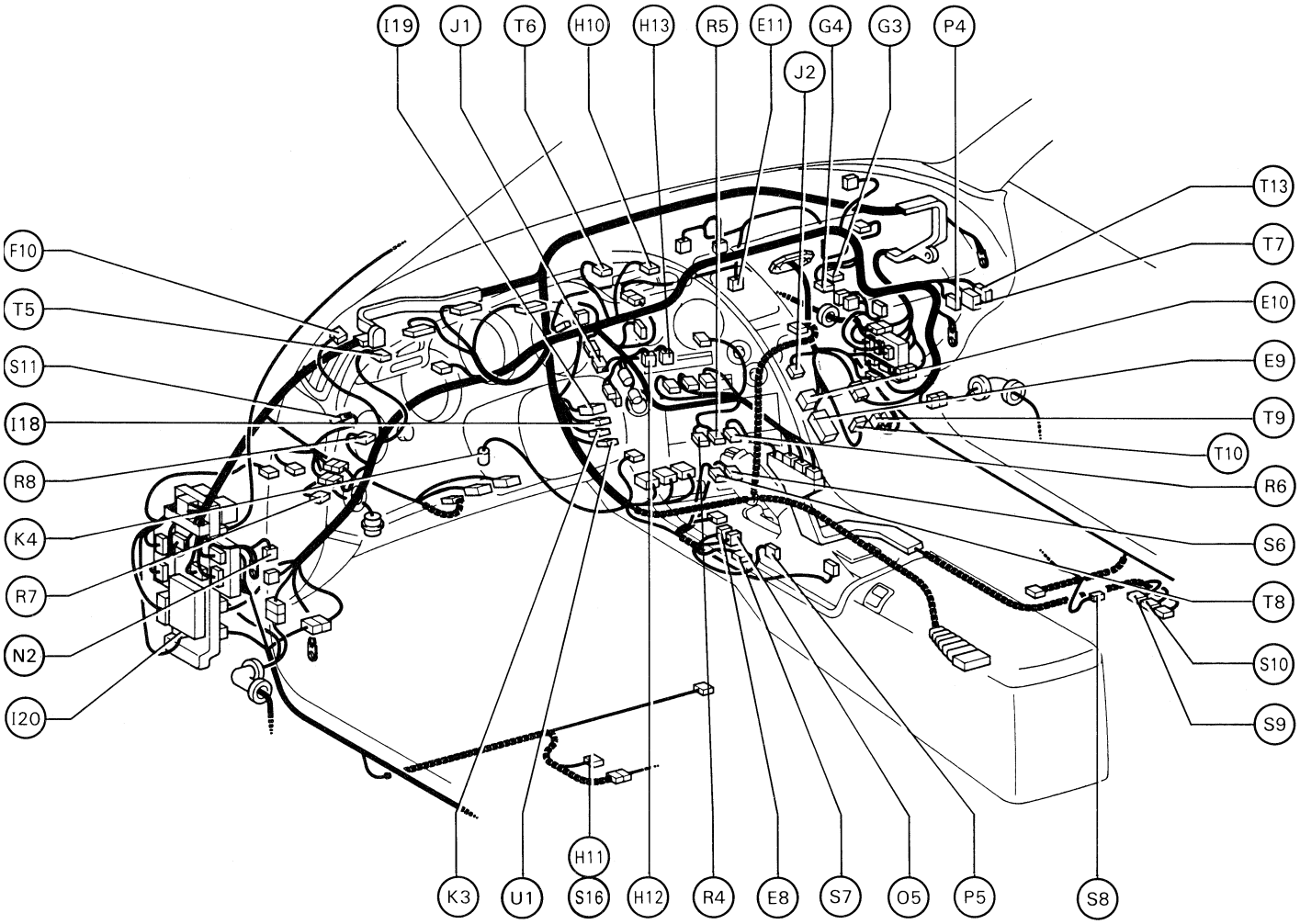

E 8 Electronically Controlled Transmission Pattern Select SW
E 9 Engine Control Module (Engine and Electronically Controlled Transmission ECU)
E 10 Engine Control Module (Engine and Electronically Controlled Transmission ECU)
E 11 Engine Coolant Temp. Sensor (Water Temp. Sensor) (for A/C System)

F 10 Front Tweeter (Speaker) LH
F 11 Front Tweeter (Speaker) RH

G 3 Glove Box Light
G 4 Glove Box Light SW

H 10 Hazard SW
H 11 Heated Oxygen Sensor (Sub)
H 12 Heater Control SW
H 13 Heater Control SW

I 18 Ignition Key Cylinder Light
I 19 Ignition SW
I 20 Integration Relay

J 1 Junction Connector
J 2 Junction Connector

K 3 Key Interlock Solenoid
K 4 Kick Down SW

N 2 Noise Filter

O 5 O/D Main SW and A/T Indicator Light (for Shift Lever)

P 4 PPS ECU
P 5 Parking Brake SW

R 4 Radio and Player (w/o Stereo Power Amplifier)
R 5 Radio and Player (w/o Stereo Power Amplifier)
R 6 Radio and Player (w/ Stereo Power Amplifier)
R 7 Remote Control Mirror SW
R 8 Rheostat

S 6 Seat Heater SW
S 7 Shift Lock ECU
S 8 Stereo Power Amplifier
S 9 Stereo Power Amplifier
S 10 Stereo Power Amplifier
S 11 Stop Light SW
S 16 Sub Heated Oxygen Sensor (for California)

T 5 Telltale Light LH
T 6 Telltale Light RH
T 7 Theft Deterrent ECU
T 8 TRAC Off SW
T 9 Traction ECU
T 10 Traction ECU
T 13 Theft Deterrent ECU

U 1 Unlock Warning SW

Position of Parts in Body

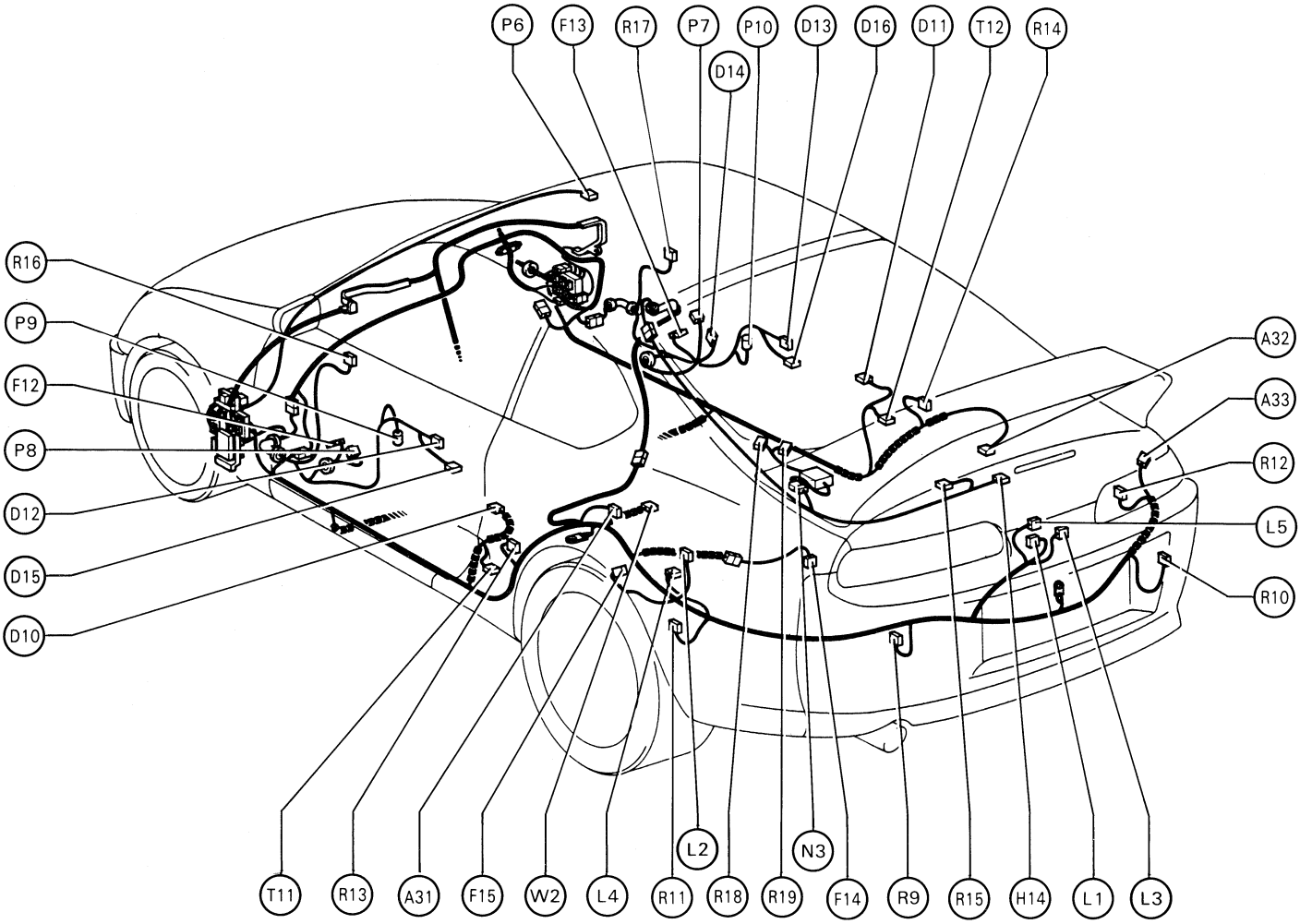

A 31 ABS Speed Sensor Rear LH
A 32 ABS Speed Sensor Rear RH
A 33 Auto Antenna Motor

D 10 Door Courtesy SW LH
D 11 Door Courtesy SW RH
D 12 Door Key Lock and Unlock SW LH
D 13 Door Key Lock and Unlock SW RH
D 14 Door Lock Control SW RH
D 15 Door Lock Motor and Door Unlock Detection SW LH
D 16 Door Lock Motor and Door Unlock Detection SW RH

F 12 Front Door Speaker LH
F 13 Front Door Speaker RH
F 14 Fuel Pump and Sender
F 15 Fuel Pump ECU

H 14 High Mounted Stop Light

L 1 License Plate Light
L 2 Light Failure Sensor
L 3 Luggage Compartment Key Unlock SW
L 4 Luggage Compartment Light
L 5 Luggage Compartment Light SW

N 3 Noise Filter

P 6 Personal Light
P 7 Power Window Control SW RH
P 8 Power Window Master SW and Door Lock Control SW LH
P 9 Power Window Motor LH
P 10 Power Window Motor RH

R 9 Rear Combination Light LH
R 10 Rear Combination Light RH
R 11 Rear Side Marker Light LH
R 12 Rear Side Marker Light RH
R 13 Rear Speaker LH
R 14 Rear Speaker RH
R 15 Rear Wiper Motor and Relay
R 16 Remote Control Mirror and Mirror Heater LH
R 17 Remote Control Mirror and Mirror Heater RH
R 18 Rear Window Defogger (+)
R 19 Rear Window Defogger (–)

T 11 Tension Reducer Solenoid LH
T 12 Tension Reducer Solenoid RH

W 2 Woofer (Speaker)

Position of Parts in Seat

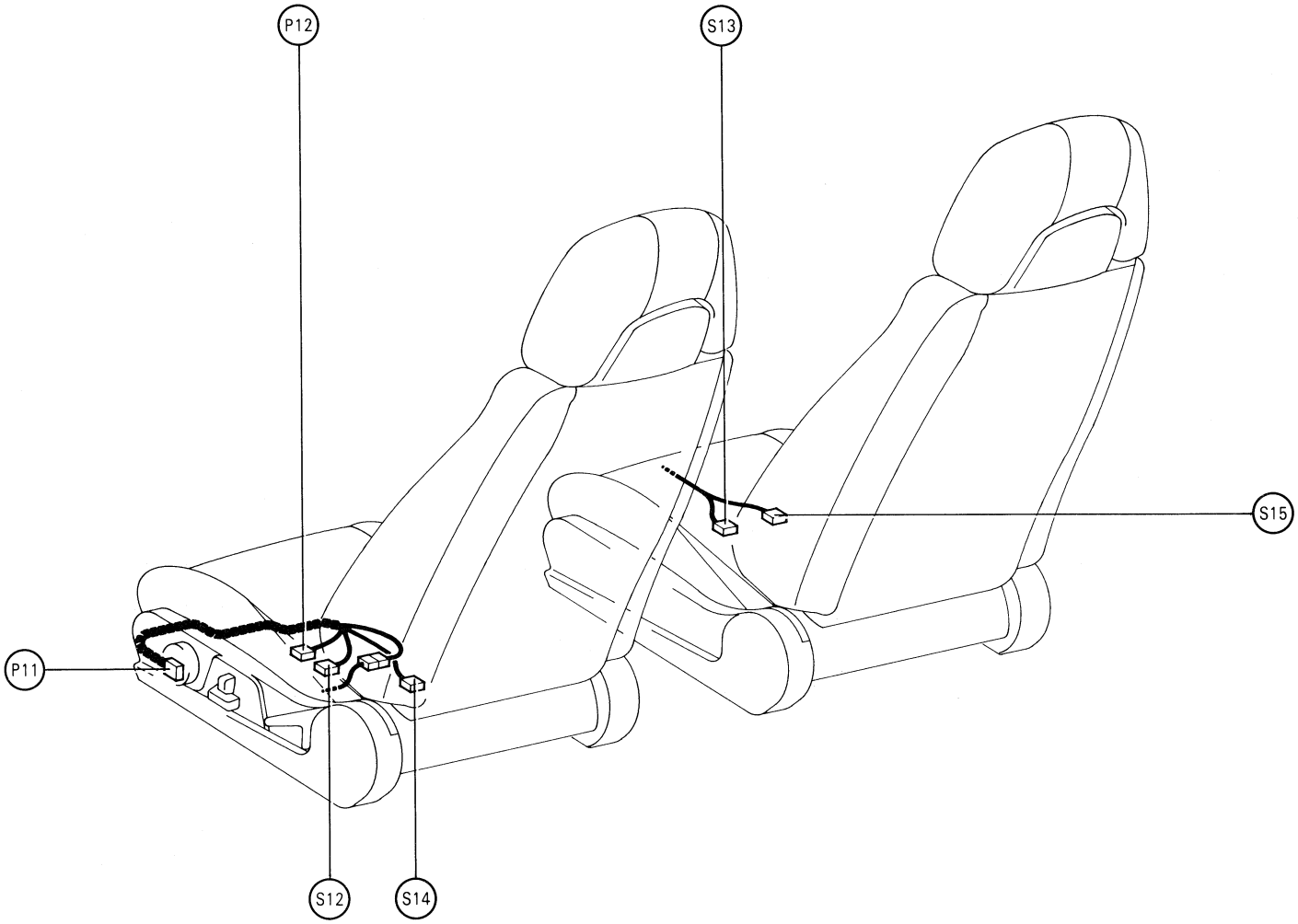

P 11 Power Seat Control SW (for Driver's Seat)
P 12 Power Seat Motor (for Driver's Seat Slide Control)

S 12 Seat Heater (for Driver's Seat)
S 13 Seat Heater (for Passenger's Seat)
S 14 Seat Heater Relay (for Driver's Seat)
S 15 Seat Heater Relay (for Passenger's Seat)

▭ : Location of Connector Joining Wire Harness and Wire Harness

▽ : Location of Ground Points

[2JZ–GTE]

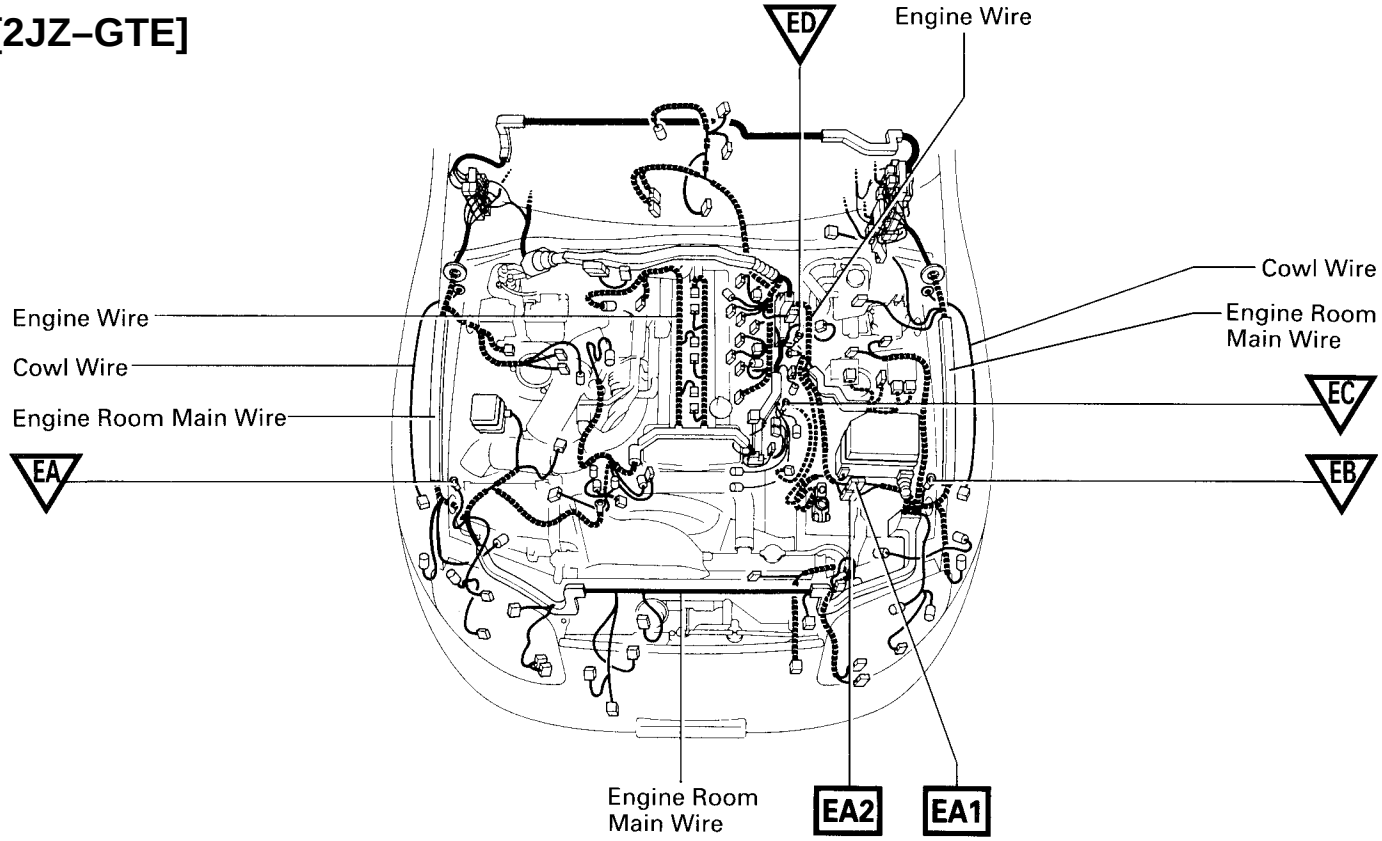

○ : Location of Splice Points

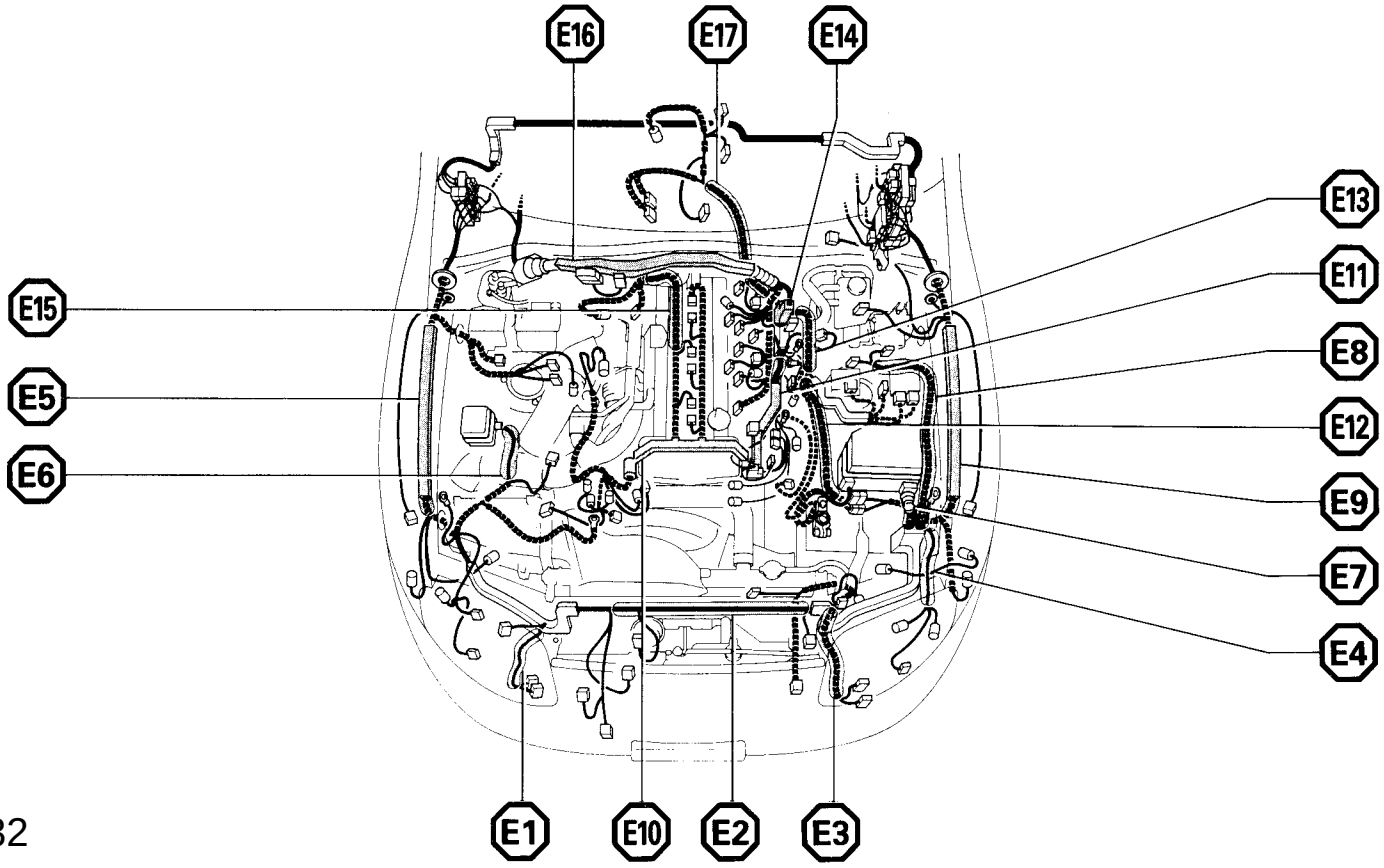

Connector Joining Wire Harness and Wire Harness

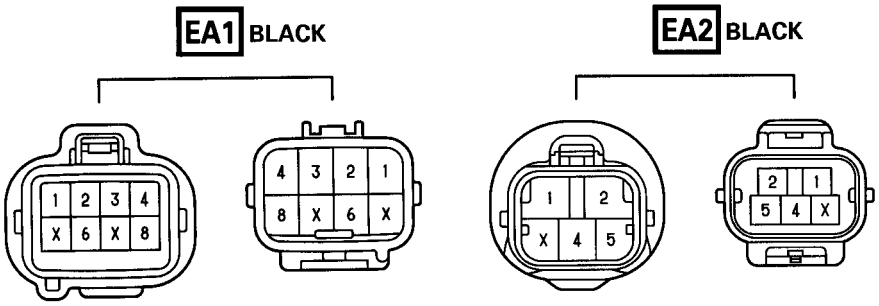

CODE	JOINING WIRE HARNESS AND WIRE HARNESS (CONNECTOR LOCATION)
EA1	ENGINE WIRE AND ENGINE ROOM MAIN WIRE (NEAR THE R/B NO. 2)
EA2	

▭ : Location of Connector Joining Wire Harness and Wire Harness

▽ : Location of Ground Points

[2JZ–GE]

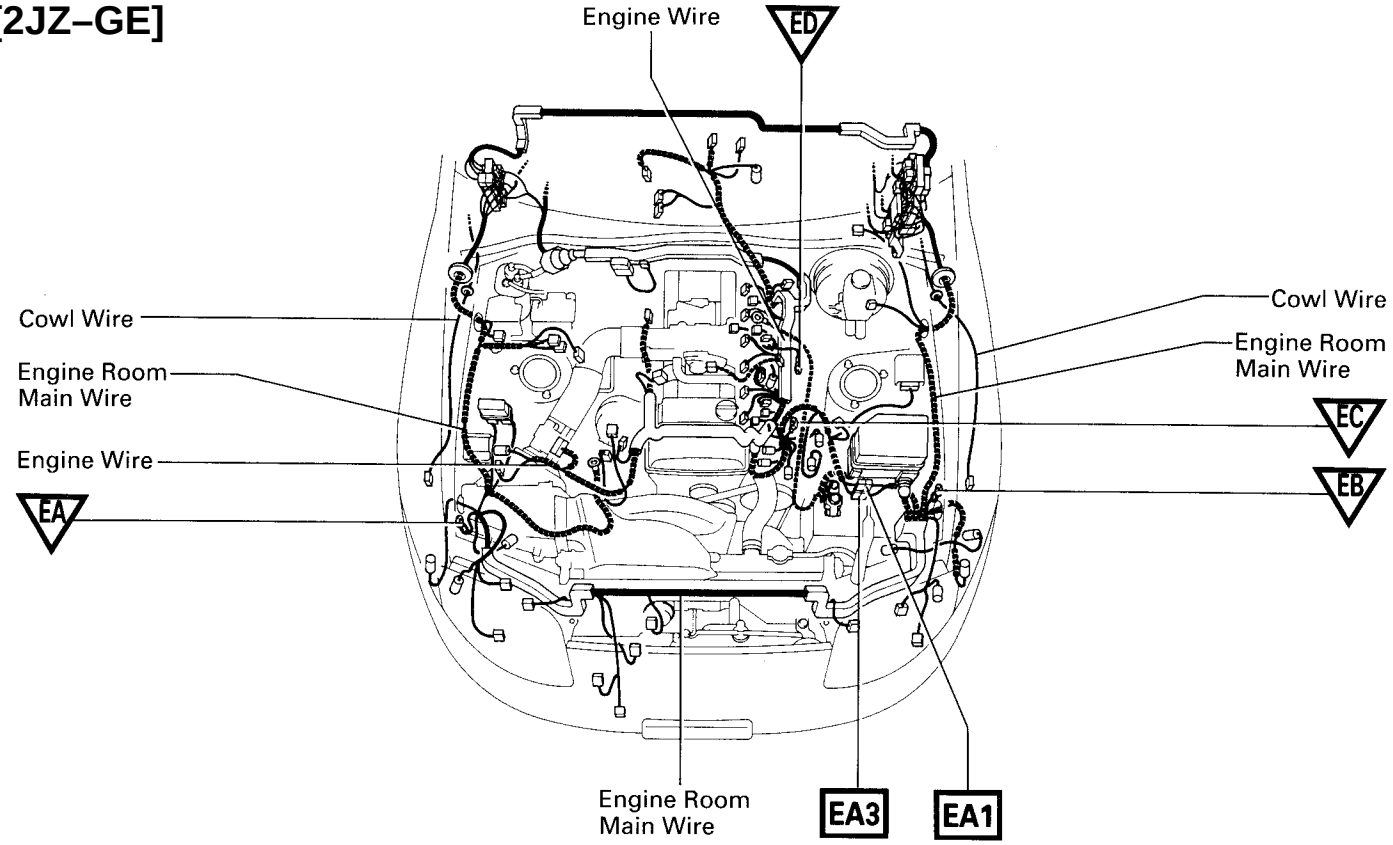

○ : Location of Splice Points

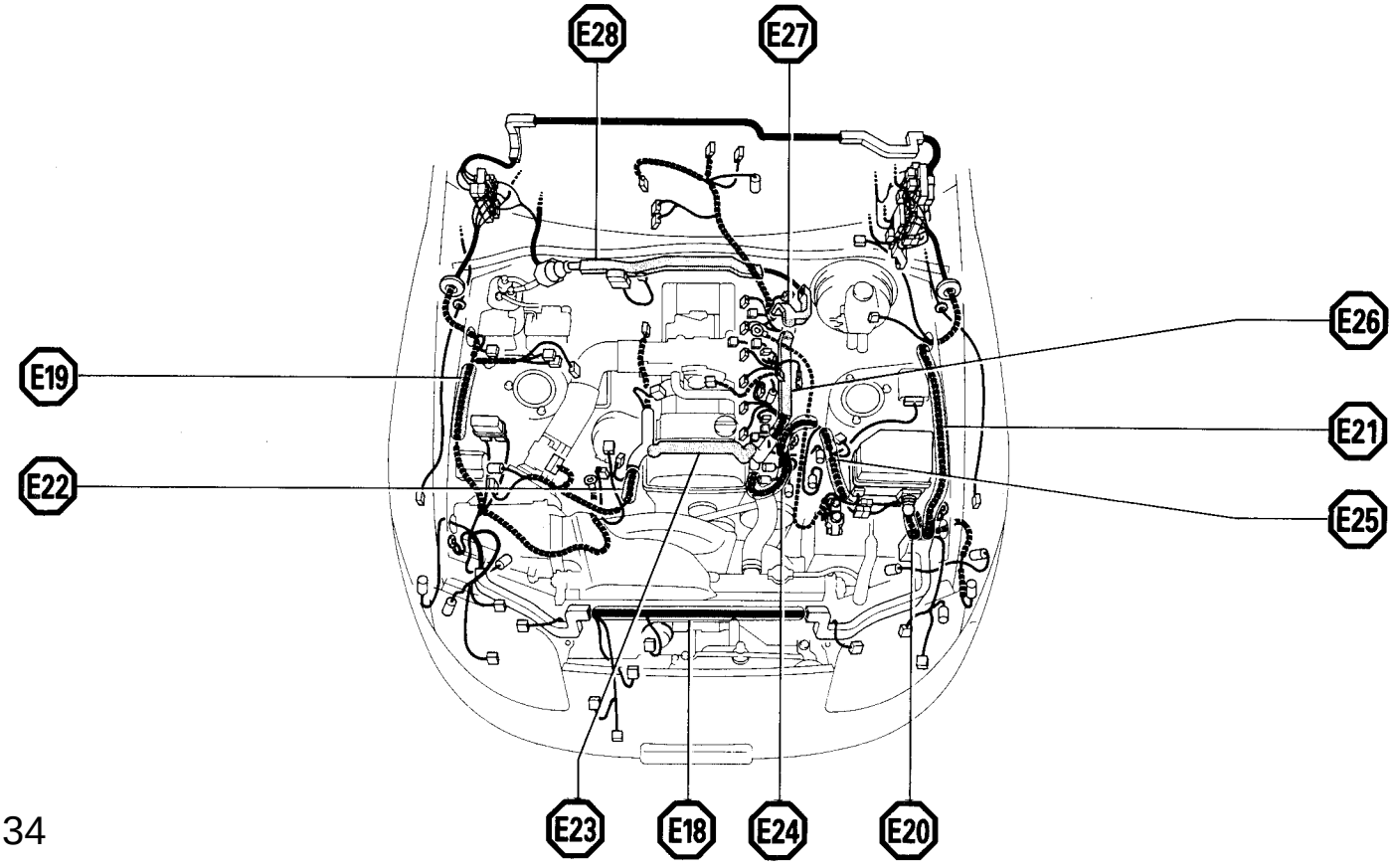

Connector Joining Wire Harness and Wire Harness

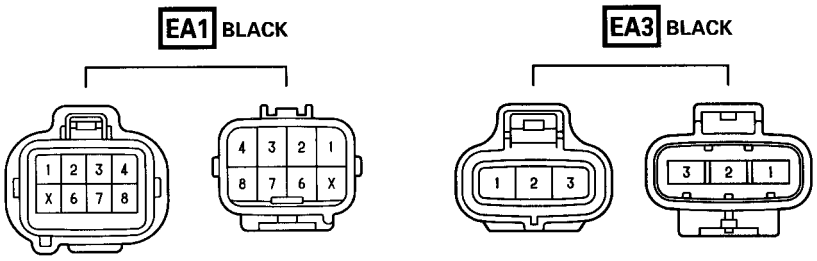

CODE	JOINING WIRE HARNESS AND WIRE HARNESS (CONNECTOR LOCATION)
EA1	ENGINE WIRE AND ENGINE ROOM MAIN WIRE (NEAR THE R/B NO. 2)
EA3	

▭ : Location of Connector Joining Wire Harness and Wire Harness

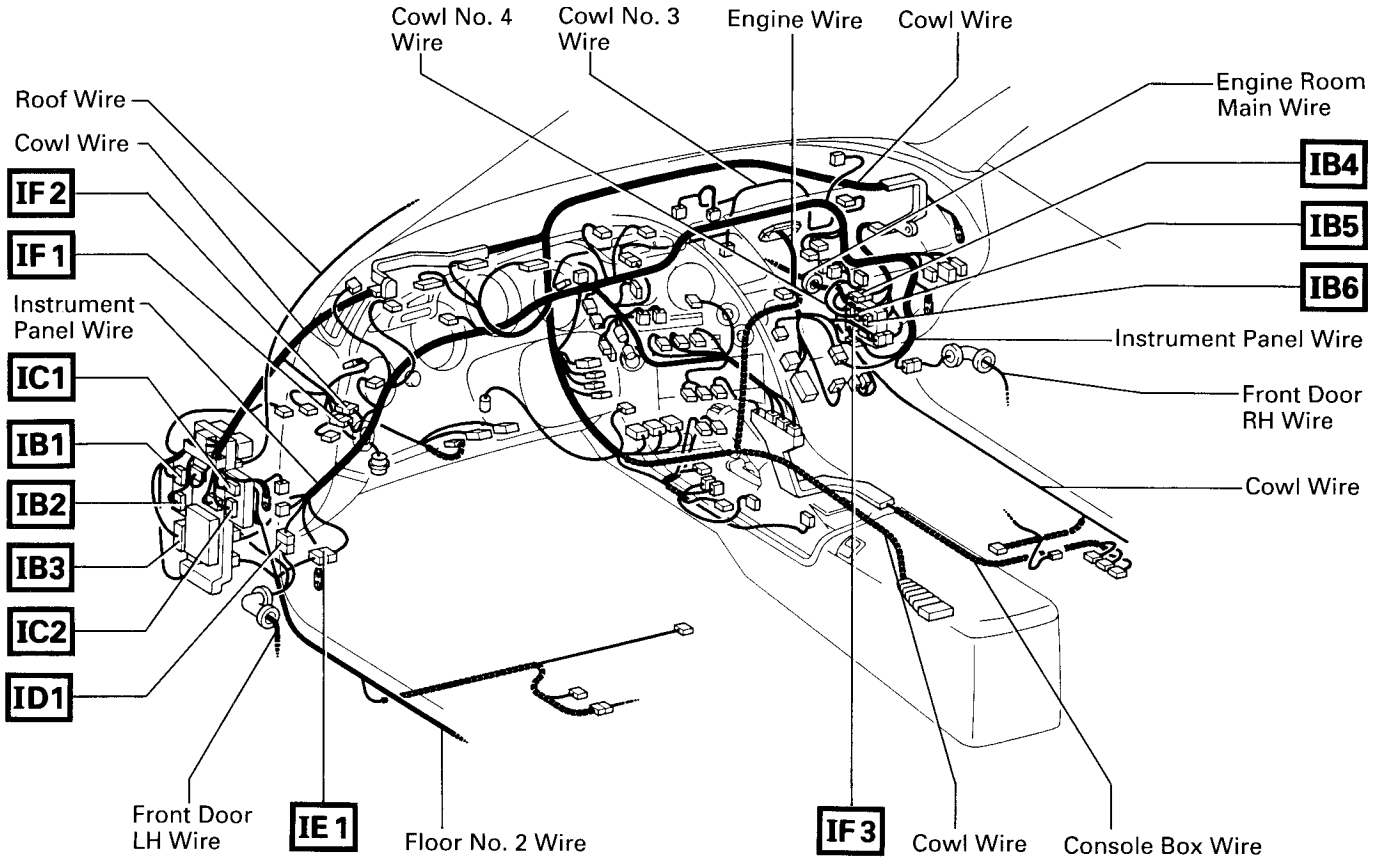

▽ : Location of Ground Points

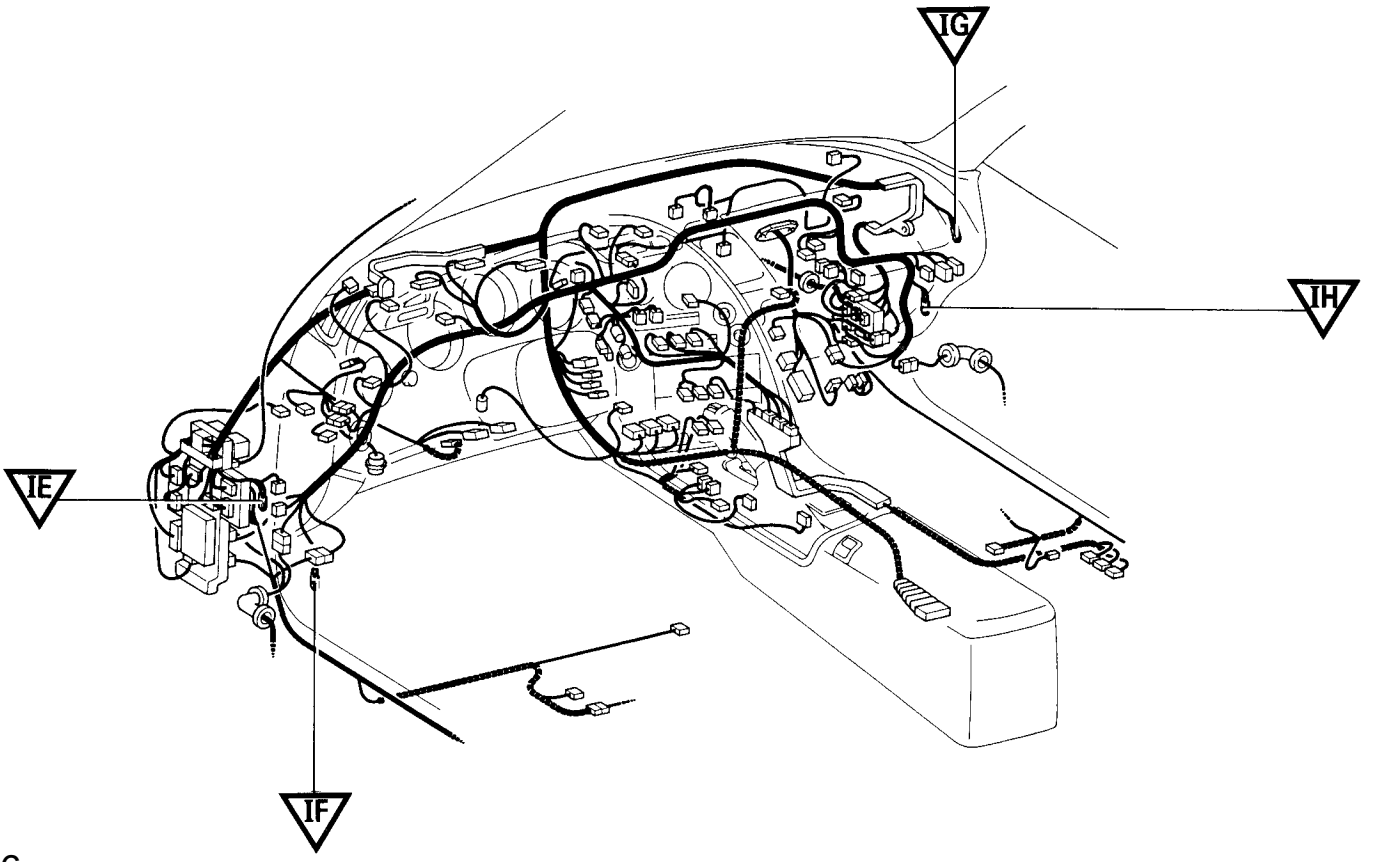

Connector Joining Wire Harness and Wire Harness

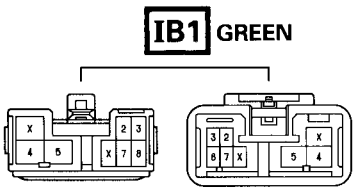

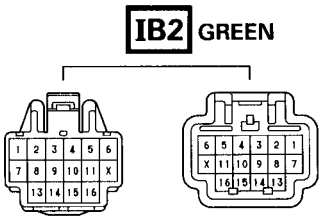

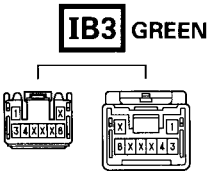

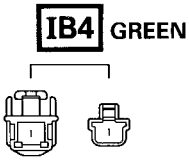

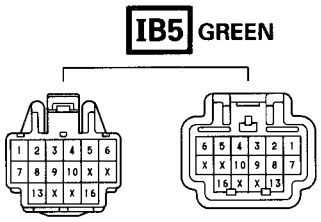

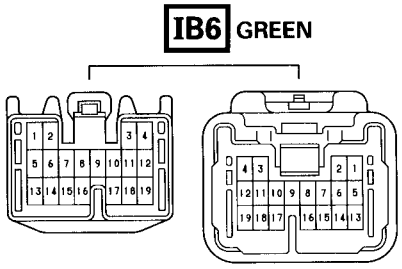

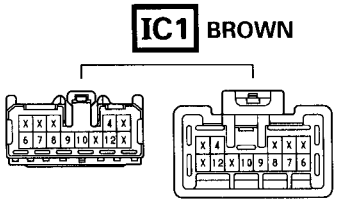

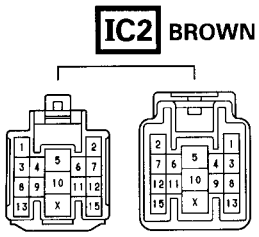

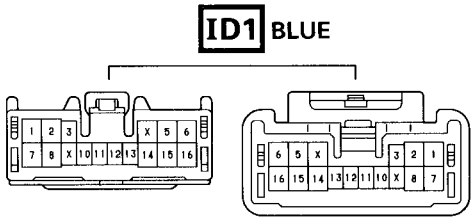

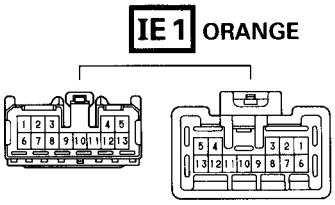

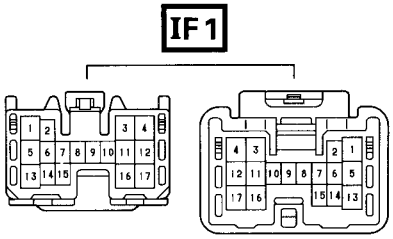

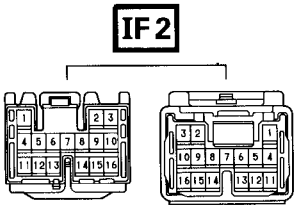

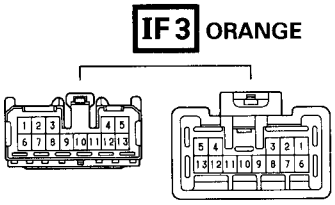

CODE	JOINING WIRE HARNESS AND WIRE HARNESS (CONNECTOR LOCATION)
IB1	ENGINE ROOM MAIN WIRE AND COWL WIRE (LEFT KICK PANEL)
IB2	
IB3	
IB4	ENGINE ROOM MAIN WIRE AND COWL WIRE (RIGHT KICK PANEL)
IB5	
IB6	
IC1	FLOOR NO. 2 WIRE AND COWL WIRE (LEFT KICK PANEL)
IC2	
ID1	FRONT DOOR LH WIRE AND INSTRUMENT PANEL WIRE (LEFT KICK PANEL)
IE1	INSTRUMENT PANEL WIRE AND FLOOR NO. 2 WIRE (LEFT KICK PANEL)
IF1	INSTRUMENT PANEL WIRE AND COWL WIRE (INSTRUMENT PANEL REINFORCEMENT LH)
IF2	
IF3	INSTRUMENT PANEL WIRE AND COWL WIRE (RIGHT KICK PANEL)

▭ : Location of Connector Joining Wire Harness and Wire Harness

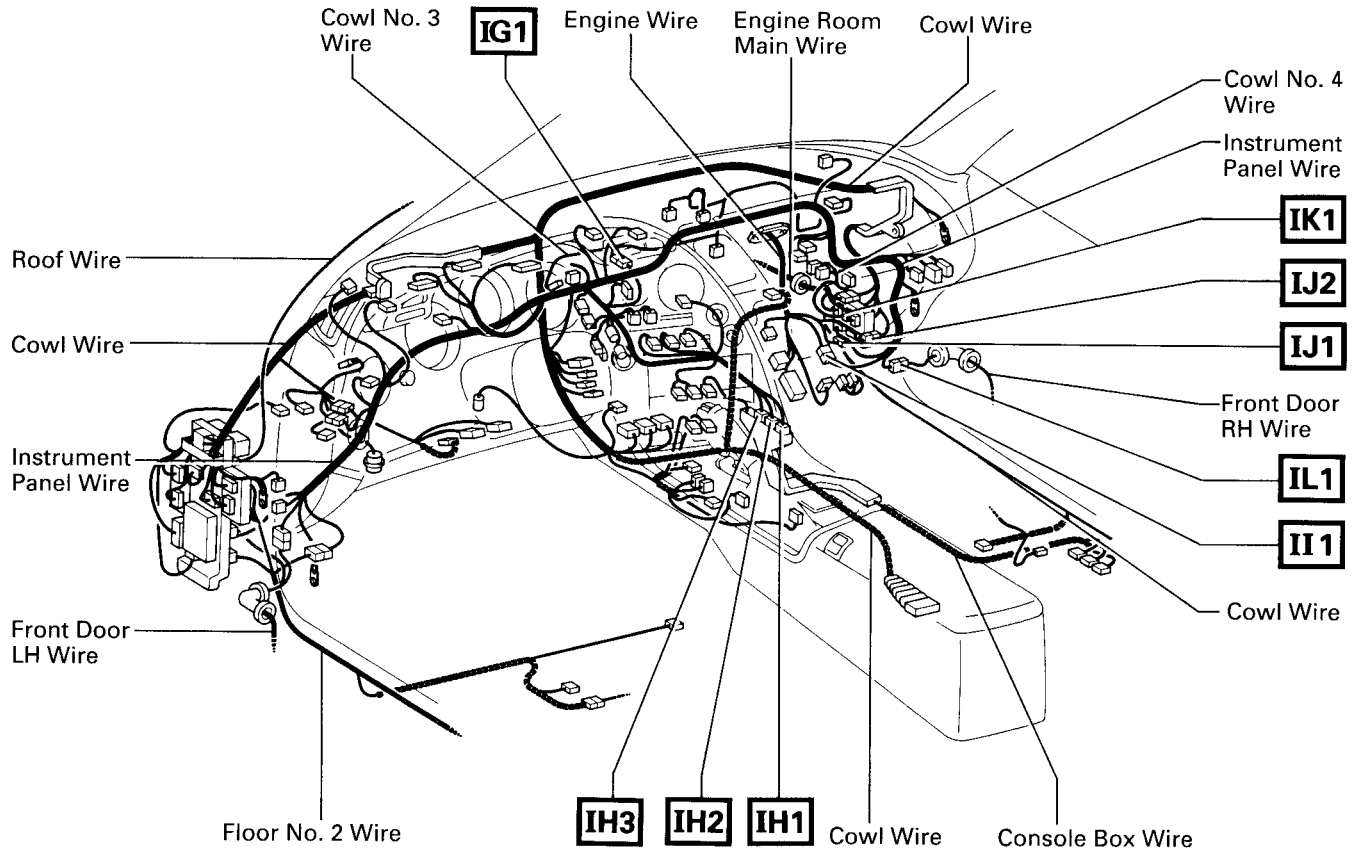

⬡ : Location of Splice Points

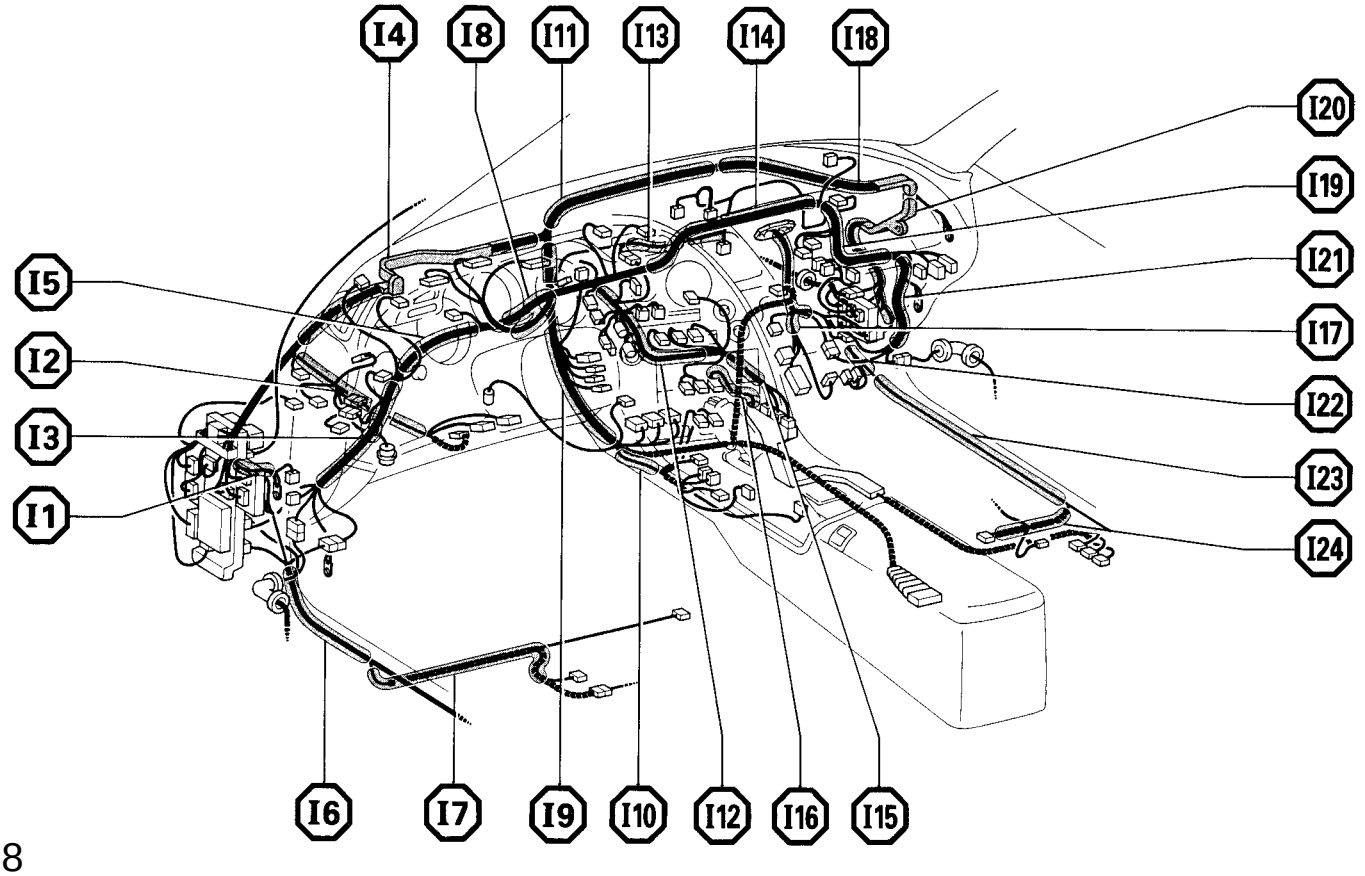

Connector Joining Wire Harness and Wire Harness

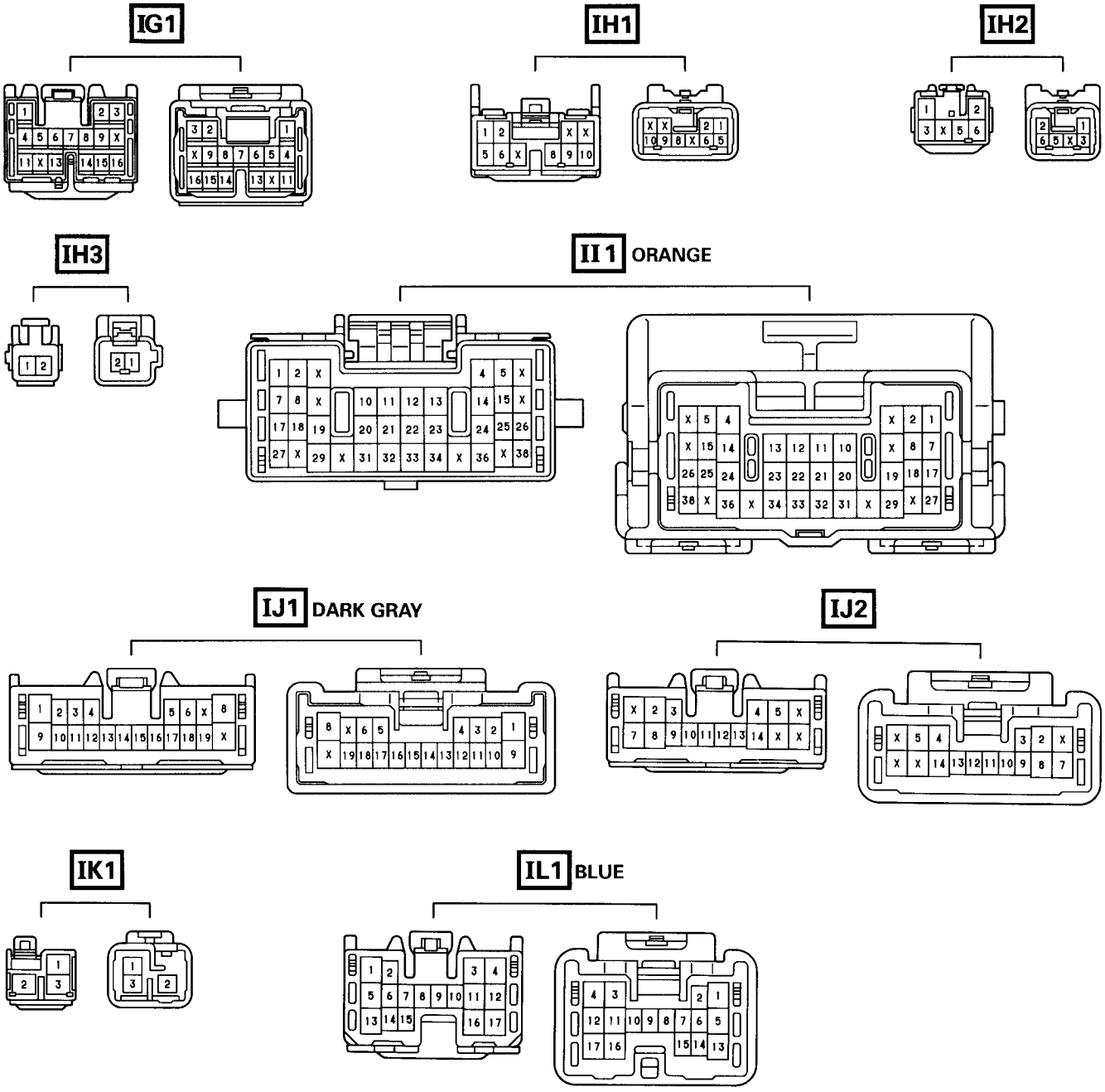

CODE	JOINING WIRE HARNESS AND WIRE HARNESS (CONNECTOR LOCATION)
IG1	INSTRUMENT PANEL WIRE AND COWL NO. 3 WIRE (BEHIND HEATER CONTROL SW)
IH1	INSTRUMENT PANEL WIRE AND CONSOLE BOX WIRE (UNDER THE INSTRUMENT PANEL BRACE RH)
IH2	
IH3	
II1	ENGINE WIRE AND INSTRUMENT PANEL WIRE (RIGHT KICK PANEL)
IJ1	ENGINE WIRE AND COWL WIRE (RIGHT KICK PANEL)
IJ2	
IK1	COWL NO. 4 WIRE AND COWL WIRE (RIGHT KICK PANEL)
IL1	FRONT DOOR RH WIRE AND INSTRUMENT PANEL WIRE (RIGHT KICK PANEL)

▭ : Location of Connector Joining Wire Harness and Wire Harness

▽ : Location of Ground Points

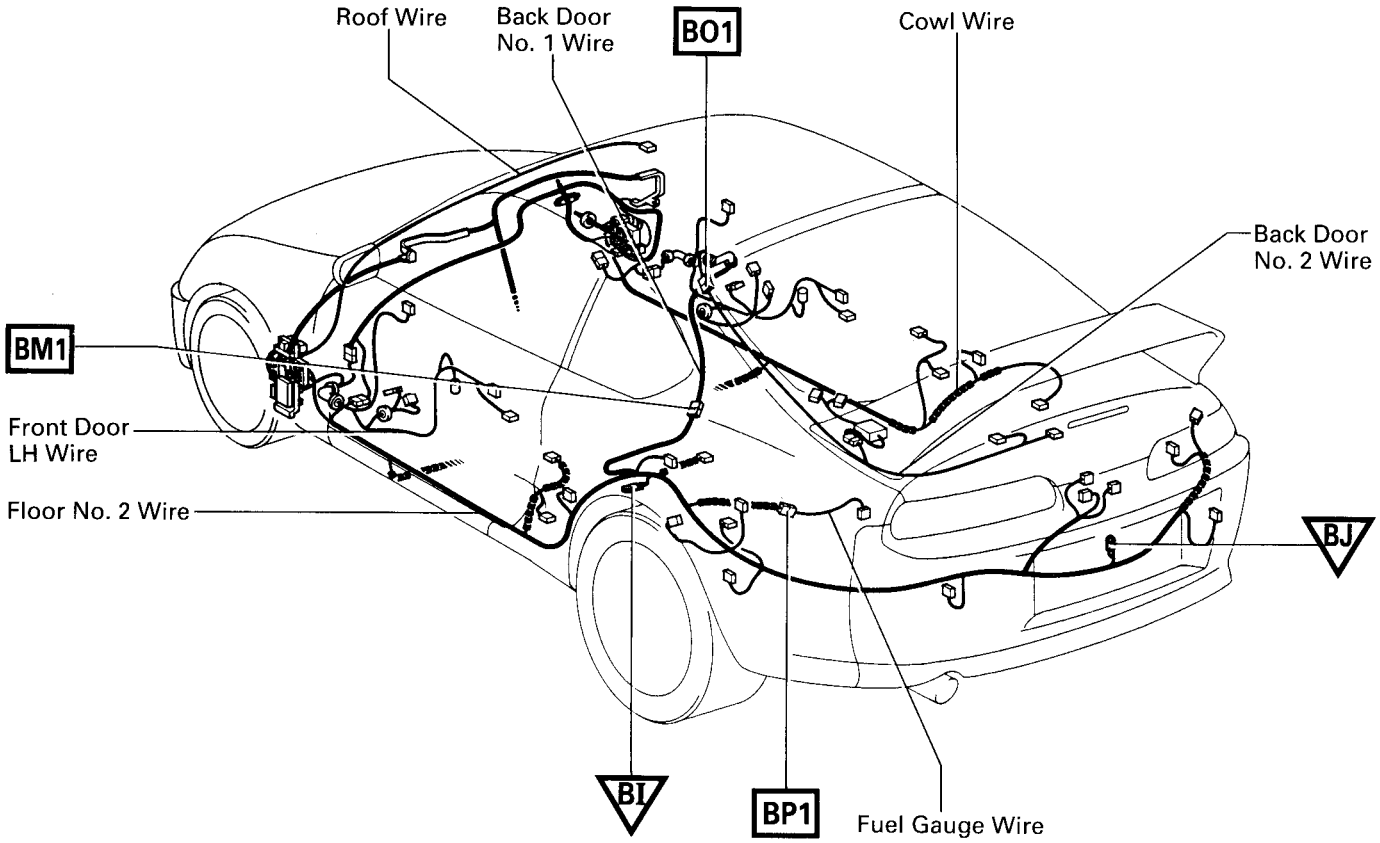

○ : Location of Splice Points

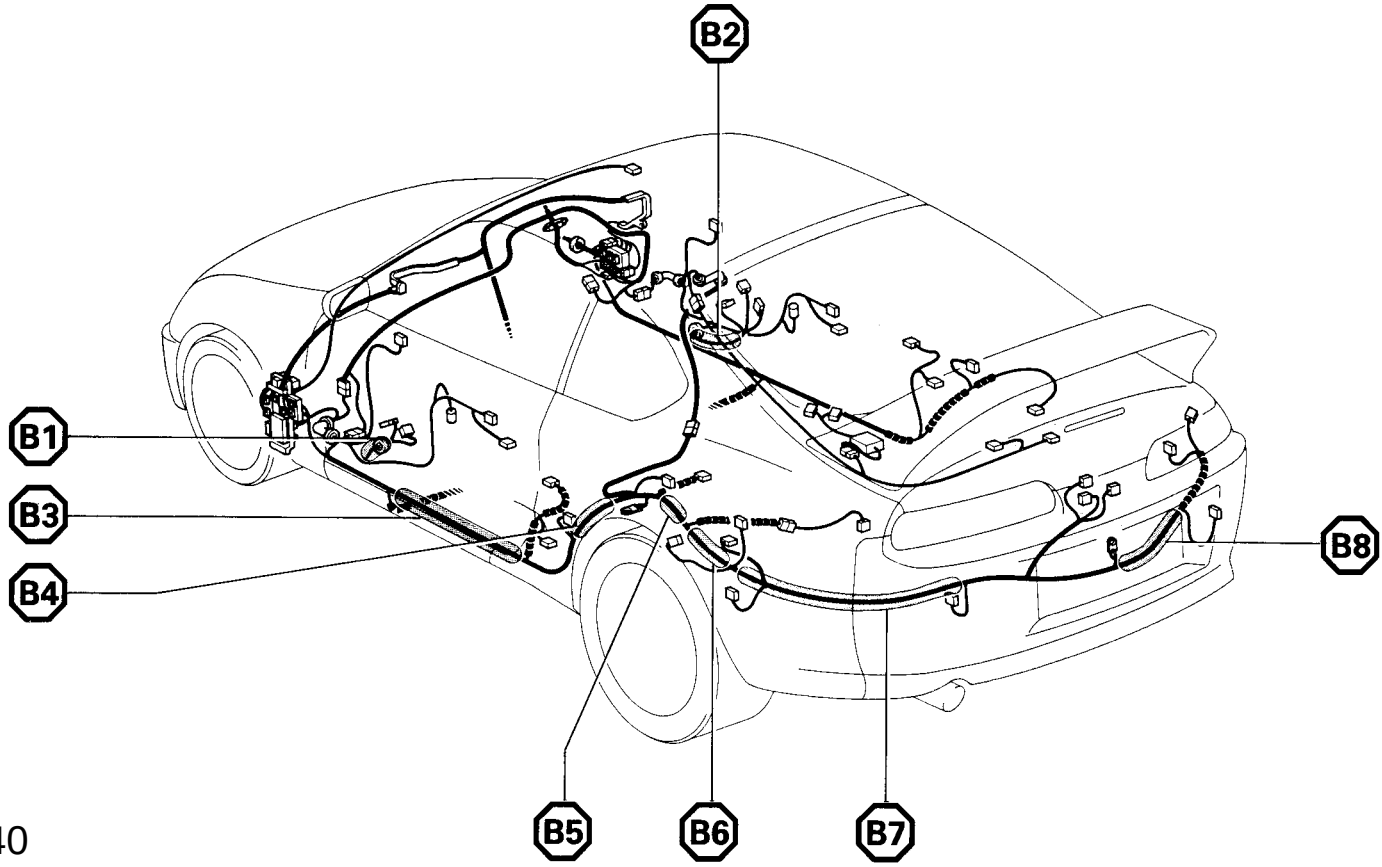

Connector Joining Wire Harness and Wire Harness

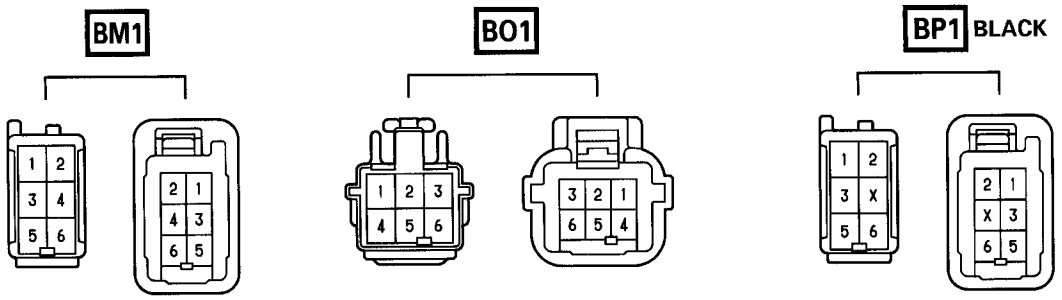

CODE	JOINING WIRE HARNESS AND WIRE HARNESS (CONNECTOR LOCATION)
BM1	BACK DOOR NO. 1 WIRE AND FLOOR NO. 2 WIRE (LEFT SIDE OF PACKAGE TRAY TRIM)
BO1	BACK DOOR NO. 2 WIRE AND BACK DOOR NO. 1 WIRE (BACK DOOR UPPER LEFT)
BP1	FUEL GAUGE WIRE AND FLOOR NO. 2 WIRE (LUGGAGE ROOM FRONT LH)

▭ : Location of Connector Joining Wire Harness and Wire Harness

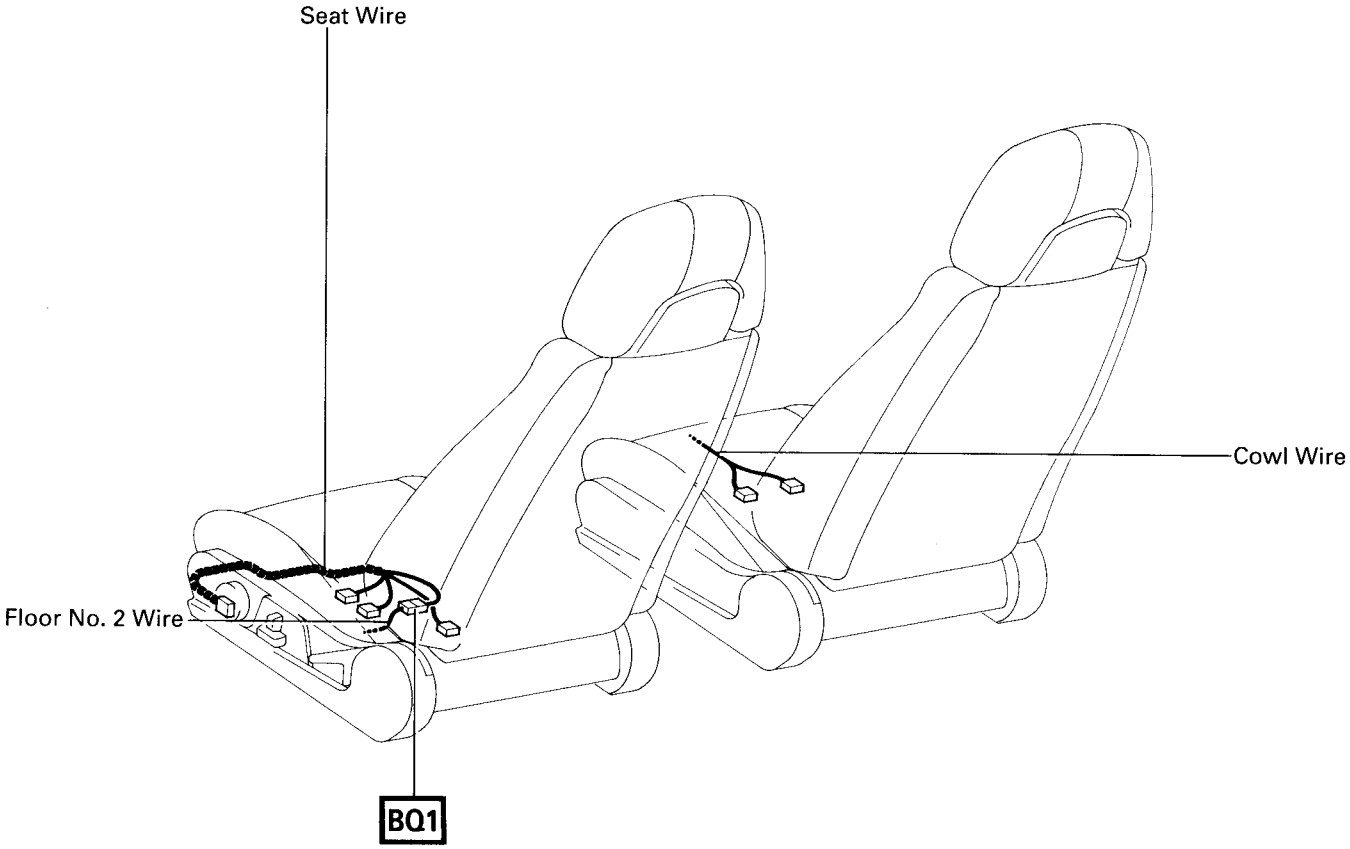

⬡ : Location of Splice Points

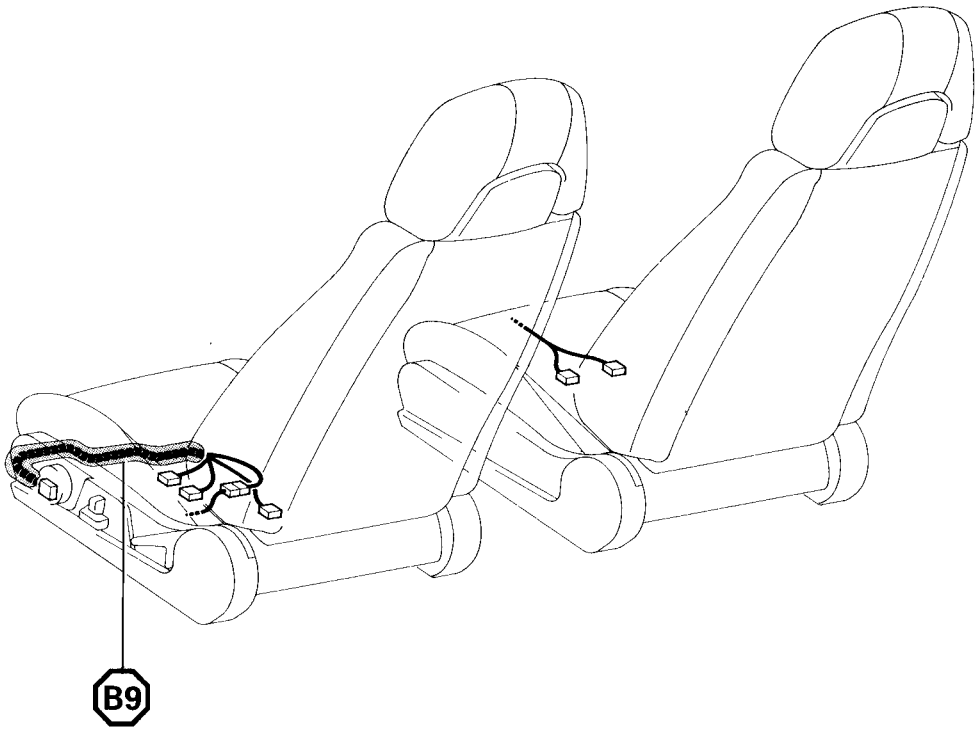

Connector Joining Wire Harness and Wire Harness

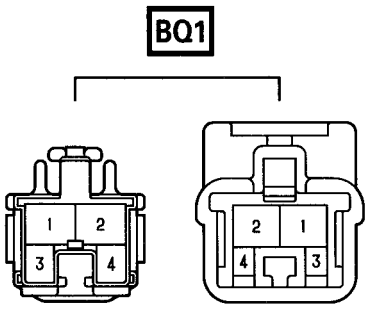

CODE	JOINING WIRE HARNESS AND WIRE HARNESS (CONNECTOR LOCATION)
BQ1	FLOOR NO. 2 WIRE AND SEAT WIRE (UNDER THE FRONT LH SEAT)

POWER SOURCE (Current Flow Chart)

The chart below shows the route by which current flows from the battery to each electrical source (Fusible Link, Circuit Breaker, Fuse, etc.) and other parts.

The next page and following pages show the parts to which each electrical source outputs current.

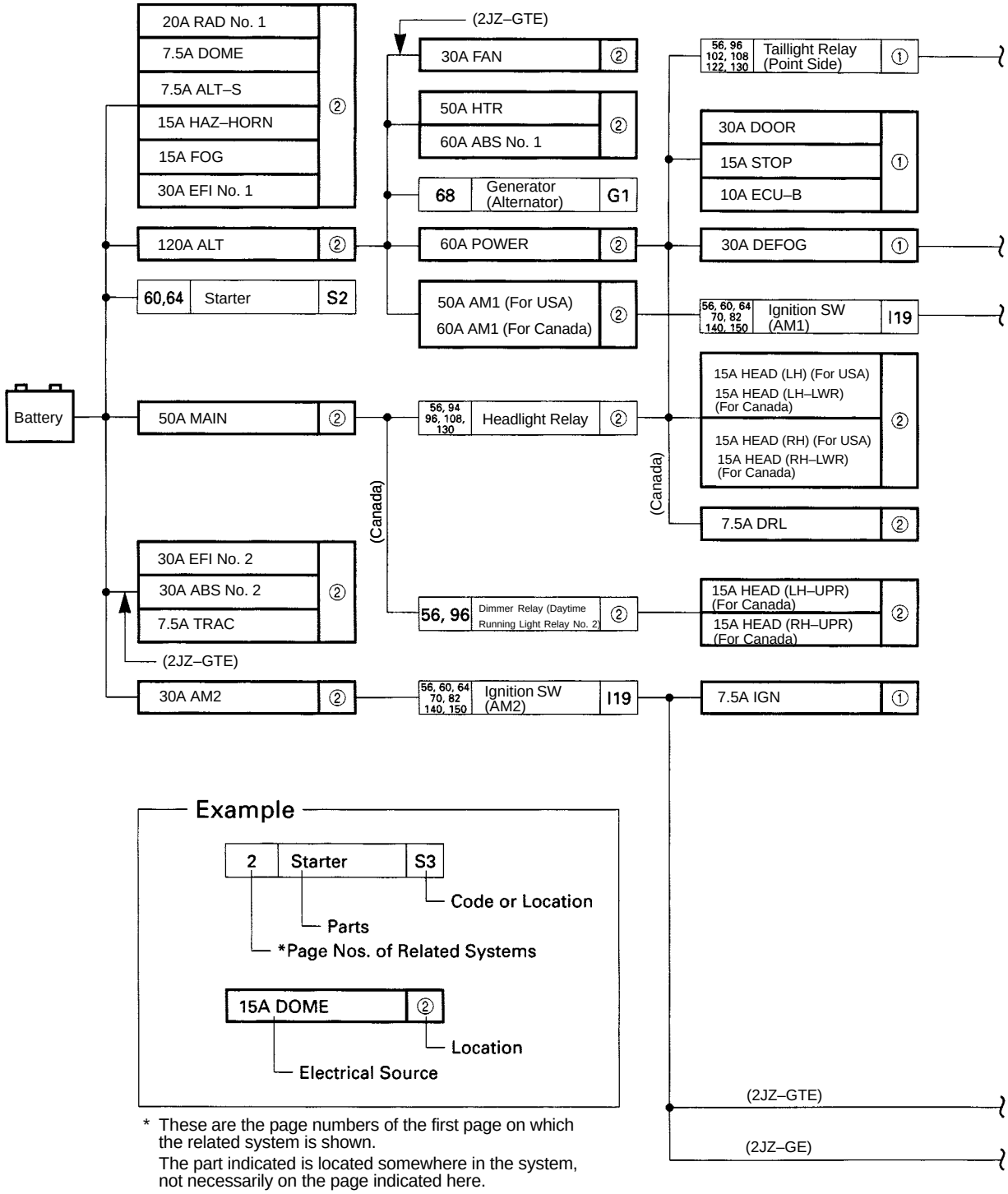

* These are the page numbers of the first page on which the related system is shown.
The part indicated is located somewhere in the system, not necessarily on the page indicated here.

[LOCATION] (1) : J/B No. 1 (See page 20) (2) : R/B No. 2 (See page 22) (3) : R/B No. 4 (See page 23)

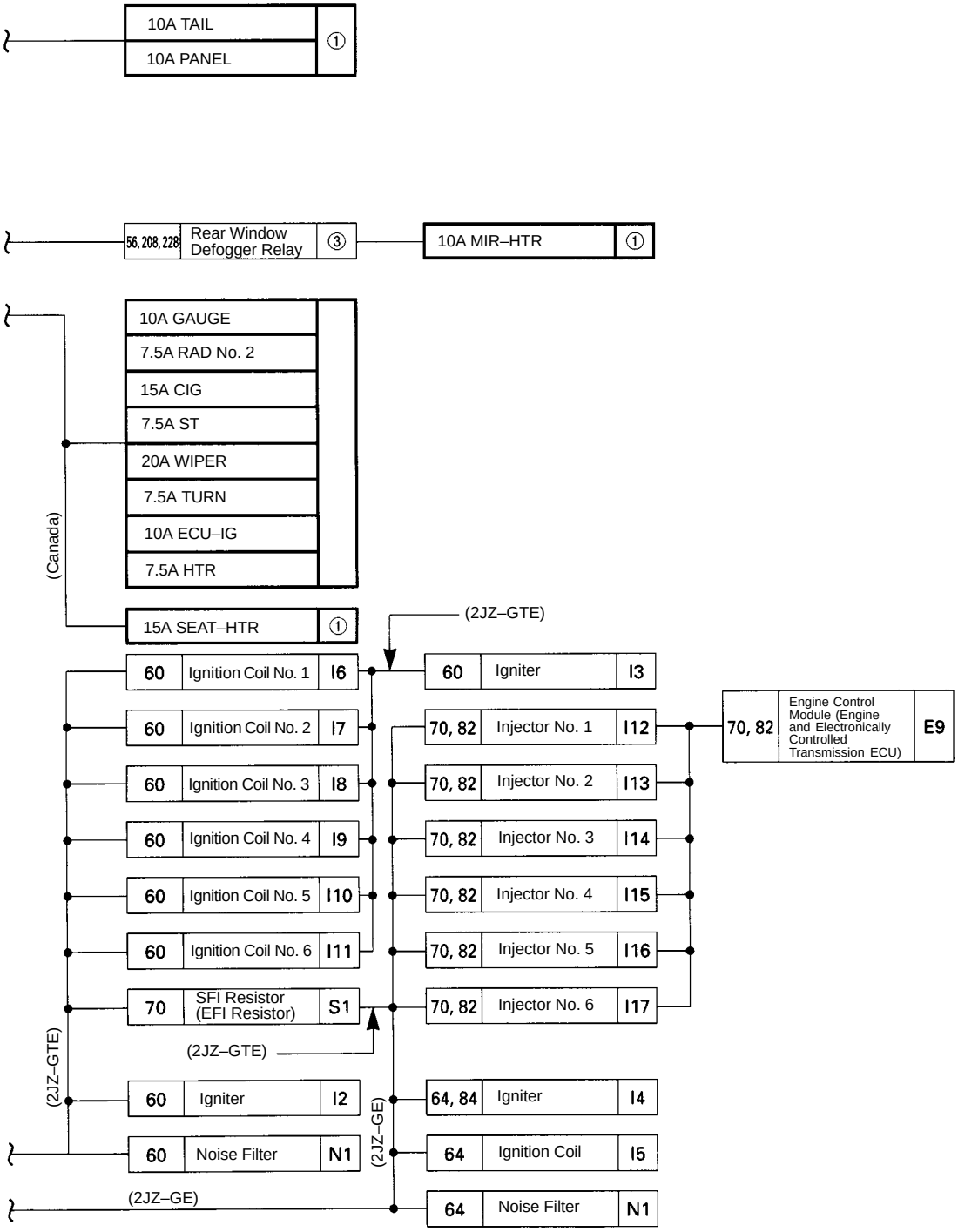

(4) : R/B No. 5 (See page 23)

POWER SOURCE (Current Flow Chart)

*1: (FOR CANADA)
*2: (FOR USA)

Location	CB or Fuse		*Page Nos. of Related Systems	228	228	228	159 164	159	159	228	208 228	159	159	164	164	159 164	228	122	210	210	116	164 220	228	206	206
			Parts	A/C Condenser Fan Motor	A/C Single Pressure SW [A/C Triple Pressure SW]	A/C Magnetic Clutch and Lock Sensor	ABS Actuator	ABS Relay		A/C Amplifier		ABS ECU		ABS and Traction ECU		ABS Lateral Acceleration Sensor	Air Inlet Control Servo Motor	Ashtray Illumination	Auto Antenna Control Relay	Auto Antenna Motor	Back–Up Light SW (for M/T)	Brake Fluid Level Warning SW	Blower Motor Control Relay	Buckle SW LH	Buckle SW RH
			Code or Location	A2	A3	A4	A6	A8	A9	A12	A14	A18	A19	A20	A22	A23	A24	A29	A30	A33	B1	B2	B4	B6	B7
①	7.5A	HTR			●	●				●	●						●								
	7.5A	IGN																							
	7.5A	RAD No. 2																	●						
	7.5A	ST																							
	7.5A	TURN																							
	10A	ECU–B									●		●	●											
	10A	ECU–IG											●	●		●			●					●	●
	10A	GAUGE					●		●		●	●	●	●	●						●	●			
	10A	MIR–HTR																							
	10A	PANEL																●							
	10A	TAIL																							
	15A	CIG								●															
	15A	SEAT–HTR																							
	15A	STOP										●			●										
	20A	WIPER																							
	30A	DEFOG																							
	30A	DOOR																							
②	7.5A	ALT–S																							
	7.5A	DOME																							
	7.5A	DRL																							
	7.5A	TRAC																							
	15A	FOG																							
	15A	HAZ–HORN																							
	15A	HEAD (LH) *2																							
	15A	HEAD (LH–LWR) *1																							
	15A	HEAD (LH–UPR) *1																							
	15A	HEAD (RH) *2																							
	15A	HEAD (RH–LWR) *1																							
	15A	HEAD (RH–UPR) *1																							
	20A	RAD No. 1																	●	●					
	30A	ABS No. 2												●											
	30A	EFI No. 1																							
	30A	EFI No. 2																							
	30A	FAN		●																					
	50A	HTR																					●		
	50A	MAIN																							
	60A	ABS No. 1					●	●	●				●	●	●										
	60A	POWER																							

* These are the page numbers of the first page on which the related system is shown.
The part indicated is located somewhere in the system, not necessarily on the page indicated here.

[LOCATION] (1) : J/B No. 1 (See page 20) (2) : R/B No. 2 (See page 22) (3) : R/B No. 4 (See page 23)

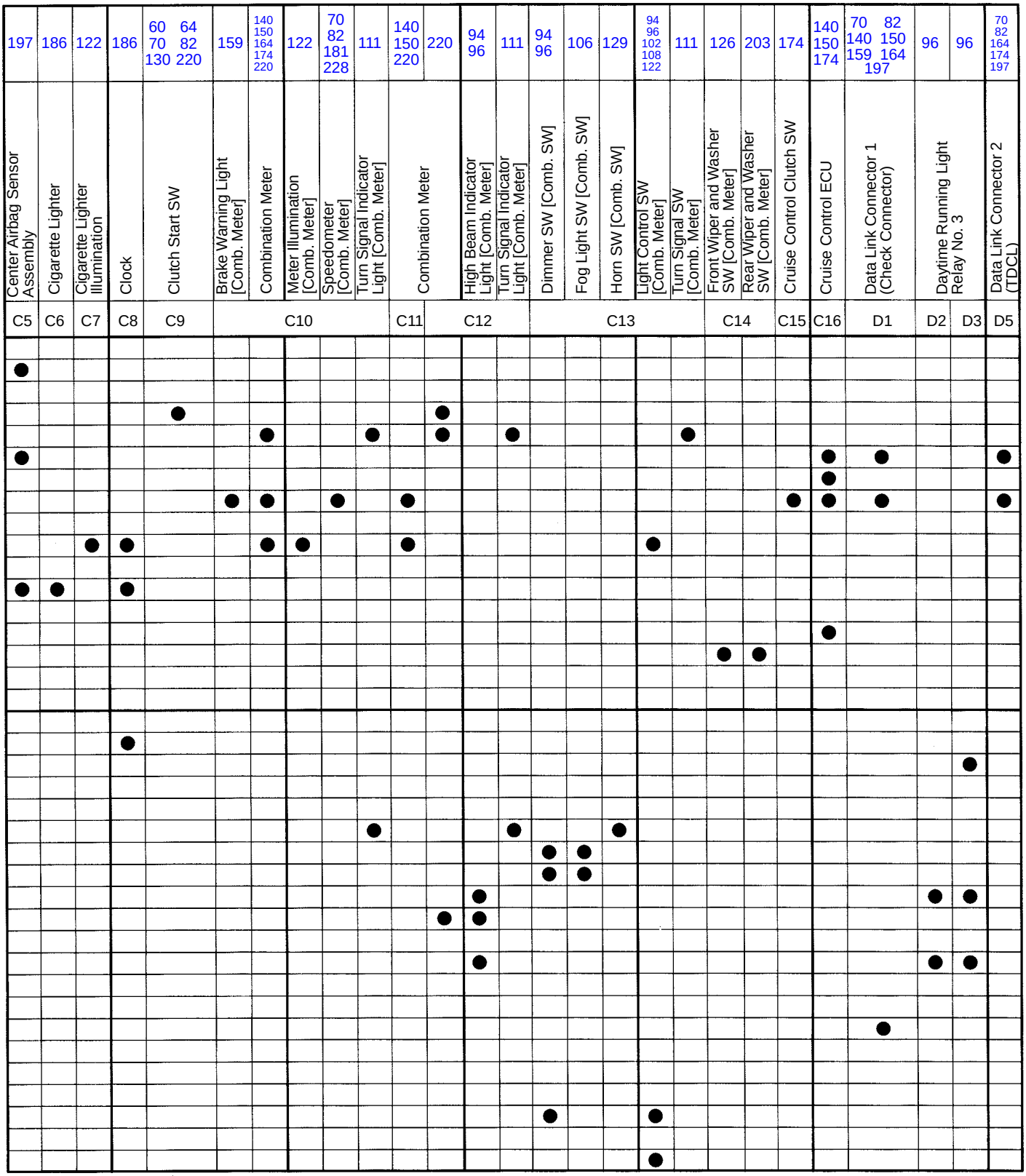

(4) : R/B No. 5 (See page 23)

POWER SOURCE (Current Flow Chart)

*1: (FOR CANADA)
*2: (FOR USA)

Location	CB or Fuse		*Page Nos. of Related Systems	Daytime Running Light Relay (Main)	Diode (for Interior Light)	Diode (for Idle–Up)	Door Courtesy SW LH	Door Courtesy SW RH	Door Key Lock and Unlock SW LH	Electronically Controlled Transmission Solenoid	Engine Coolant Temp. Sender (Water Temp. Sender)	Engine Coolant Temp. SW (Water Temp. SW)	Engine Oil Level Sensor	Electronically Controlled Transmission Pattern Select SW	Engine Control Module (Engine and Electronically Controlled Transmission ECU)		Front Fog Light and Parking Light LH	Front Fog Light and Parking Light RH	Front Side Marker Light LH	Front Side Marker Light RH	Front Turn Signal Light LH	Front Turn Signal Light RH	Front Wiper Motor
				96 164 220	118	70 82	118	118	118	140	220	228	220	112	60 64 70 82 140 150	70 82 140 150 228	102 106	102 106	102	102	111	111	126
			Parts																				
			Code or Location																				
			CB or Fuse	D6	D7	D8	D10	D11	D12	E2	E4	E5	E7	E8	E9	E10	F3	F4	F5	F6	F7	F8	F9
①	7.5A	HTR										●				●							
	7.5A	IGN														●							
	7.5A	RAD No. 2																					
	7.5A	ST													●								
	7.5A	TURN																			●	●	
	10A	ECU–B																					
	10A	ECU–IG																					
	10A	GAUGE	●								●		●		●	●							
	10A	MIR–HTR			●											●							
	10A	PANEL			●									●		●							
	10A	TAIL															●	●	●	●			
	15A	CIG																					
	15A	SEAT–HTR																					
	15A	STOP														●							
	20A	WIPER																					●
	30A	DEFOG																					
	30A	DOOR																					
②	7.5A	ALT–S																					
	7.5A	DOME	●	●		●	●	●															
	7.5A	DRL																					
	7.5A	TRAC																					
	15A	FOG															●	●					
	15A	HAZ–HORN																			●	●	
	15A	HEAD (LH) *2																					
	15A	HEAD (LH–LWR) *1																					
	15A	HEAD (LH–UPR) *1																					
	15A	HEAD (RH) *2																					
	15A	HEAD (RH–LWR) *1																					
	15A	HEAD (RH–UPR) *1																					
	20A	RAD No. 1																					
	30A	ABS No. 2																					
	30A	EFI No. 1								●					●	●							
	30A	EFI No. 2																					
	30A	FAN																					
	50A	HTR																					
	50A	MAIN	●																				
	60A	ABS No. 1																					
	60A	POWER	●																				

* These are the page numbers of the first page on which the related system is shown.
The part indicated is located somewhere in the system, not necessarily on the page indicated here.

[LOCATION] (1) : J/B No. 1 (See page 20) (2) : R/B No. 2 (See page 22) (3) : R/B No. 4 (See page 23)

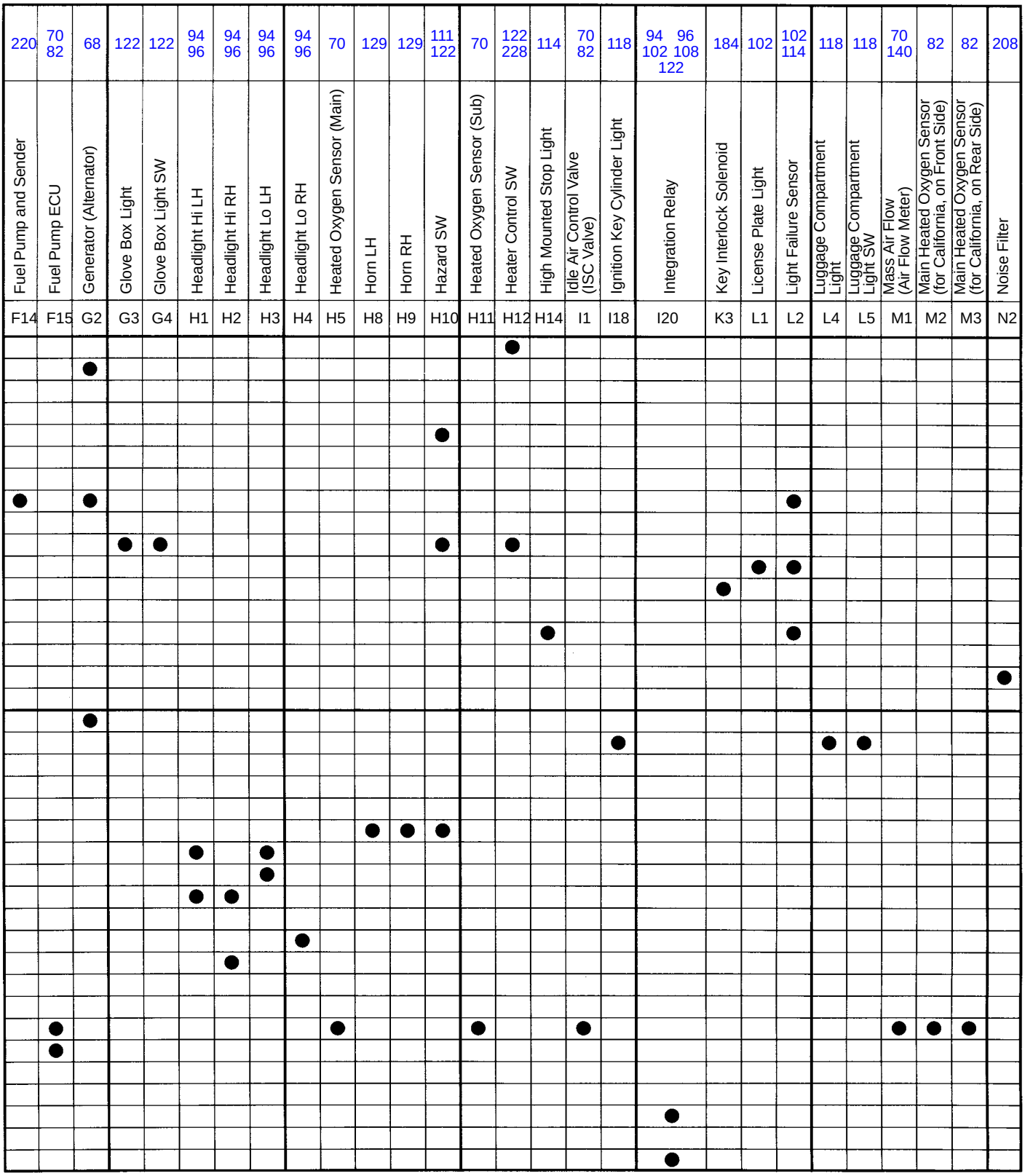

(4) : R/B No. 5 (See page 23)

POWER SOURCE (Current Flow Chart)

*1: (FOR CANADA)
*2: (FOR USA)

Location	CB or Fuse		*Page Nos. of Related Systems	208	220	122 140 150	60 64 70 82 116 130 140 150 174 220	181	159 164 220	118	136	136	136	136	190	190	228	228	228	122 210 218	122	188	122	116
			Parts	Noise Filter	Oil Pressure SW	O/D Main SW	Park/Neutral Position SW (Neutral Start SW), Back–Up Light SW and A/T Indicator Light SW (for A/T)	PPS ECU	Parking Brake SW	Personal Light	Power Window Control SW RH	Power Window Master SW and Door Lock Control SW LH	Power Window Motor LH	Power Window Motor RH	Power Seat Control SW (for Driver's Seat)	Power Seat Motor (for Driver's Seat Slide Control)	Radiator Fan Motor	Radiator Fan Relay No. 1	Radiator Fan Relay No. 2	Radio and Player (w/o Stereo Power Amplifier)	Radio and Player (w/ Stereo Power Amplifier)	Remote Control Mirror SW	Rheostat	Back–Up Light LH [Rear Comb. Light LH]
			Code or Location	N3	O2	O5	P2	P4	P5	P6	P7	P8	P9	P10	P11	P12	R1	R2	R3	R4	R6	R7	R8	R9
①	7.5A	HTR																●	●					
	7.5A	IGN																						
	7.5A	RAD No. 2																		●		●		
	7.5A	ST					●																	
	7.5A	TURN																						
	10A	ECU–B																						
	10A	ECU–IG						●												●	●			
	10A	GAUGE		●	●	●			●															●
	10A	MIR–HTR																						
	10A	PANEL			●															●	●		●	
	10A	TAIL																						
	15A	CIG																						
	15A	SEAT–HTR																						
	15A	STOP																						
	20A	WIPER																						
	30A	DEFOG	●																					
	30A	DOOR									●	●	●	●	●	●								
②	7.5A	ALT–S																						
	7.5A	DOME								●														
	7.5A	DRL																						
	7.5A	TRAC																						
	15A	FOG																						
	15A	HAZ–HORN																						
	15A	HEAD (LH) *2																						
	15A	HEAD (LH–LWR) *1																						
	15A	HEAD (LH–UPR) *1																						
	15A	HEAD (RH) *2																						
	15A	HEAD (RH–LWR) *1																						
	15A	HEAD (RH–UPR) *1																						
	20A	RAD No. 1																		●				
	30A	ABS No. 2																						
	30A	EFI No. 1																						
	30A	EFI No. 2																						
	30A	FAN															●	●	●					
	50A	HTR																						
	50A	MAIN																						
	60A	ABS No. 1																						
	60A	POWER																						

* These are the page numbers of the first page on which the related system is shown.
The part indicated is located somewhere in the system, not necessarily on the page indicated here.

[LOCATION] (1) : J/B No. 1 (See page 20) (2) : R/B No. 2 (See page 22) (3) : R/B No. 4 (See page 23)

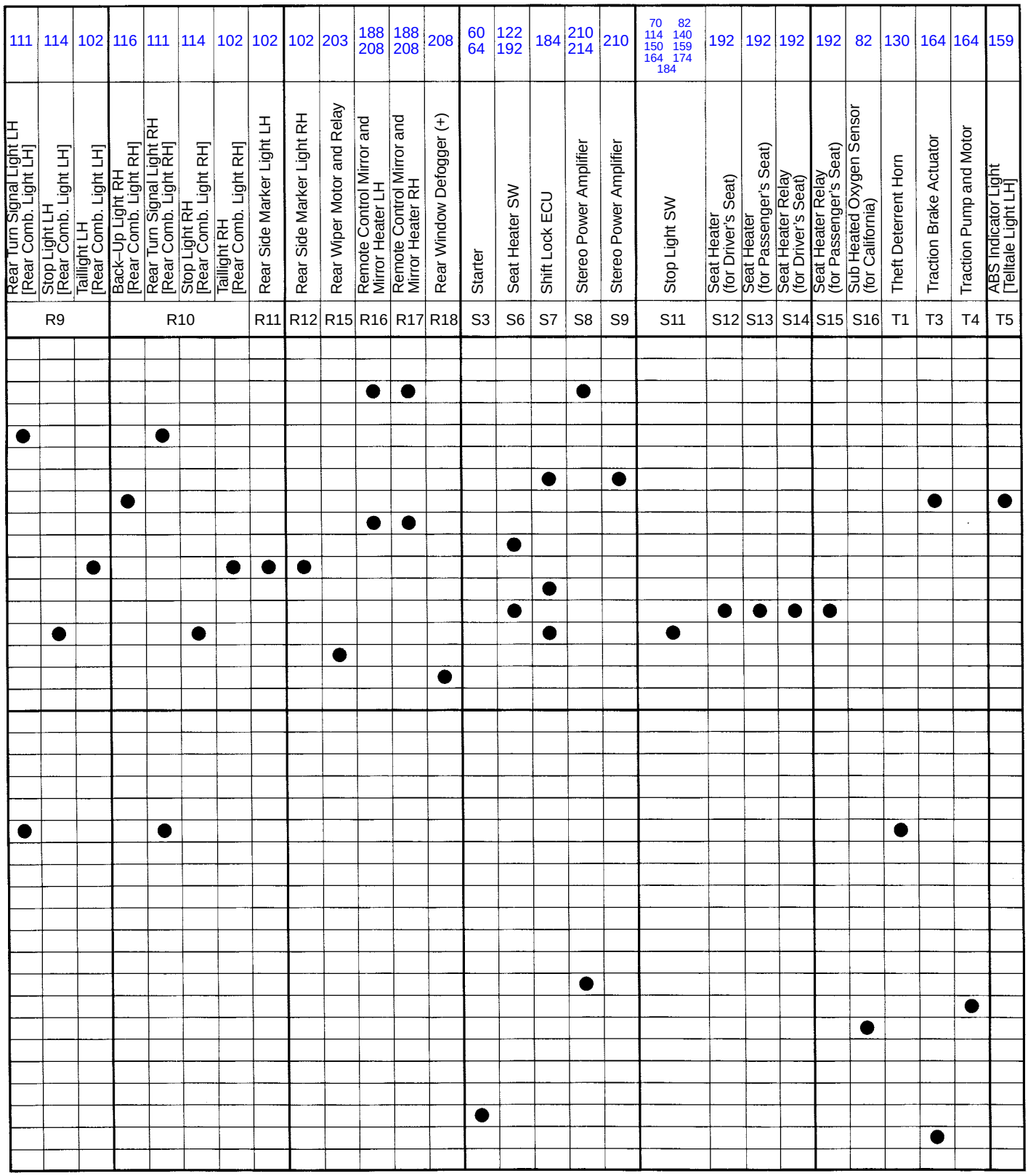

(4) : R/B No. 5 (See page 23)

POWER SOURCE (Current Flow Chart)

*1: (FOR CANADA)
*2: (FOR USA)

Location	CB or Fuse		*Page Nos. of Related Systems																								
			70 82	164 220	68	118	102 114	194	197	70 82 122 140 150 174 181 220 228	60 64 130	122	164	206	206	82	70 82	70 82	70	70	70 82	70
			Malfunction Indicator Lamp (Check Engine Warning Light) [Telltale Light LH]	Telltale Light LH	Charge Warning Light [Telltale Light RH]	Open Door Warning Light [Telltale Light RH]	Rear Light Warning Light [Telltale Light RH]	Seat Belt Warning Light [Telltale Light RH]	SRS Warning Light [Telltale Light RH]	Telltale Light RH	Theft Deterrent ECU	TRAC Off SW	Traction ECU	Tension Reducer Solenoid LH	Tension Reducer Solenoid RH	VSV (for ACIS)	VSV (for EGR)	VSV (for EVAP)	VSV (for Exhaust Bypass Valve)	VSV (for Exhaust Gas Control Valve)	VSV (for Fuel Pressure Up)	VSV (for Intake Air Control Valve)
			T5		T6						T7	T8	T9	T11	T12	V1	V2	V3	V4	V5	V6	V7
①	7.5A	HTR																				
	7.5A	IGN			●					●												
	7.5A	RAD No. 2																				
	7.5A	ST									●											
	7.5A	TURN																				
	10A	ECU–B							●	●			●									
	10A	ECU–IG									●		●	●	●							
	10A	GAUGE	●	●			●	●		●			●									
	10A	MIR–HTR																				
	10A	PANEL								●		●										
	10A	TAIL																				
	15A	CIG									●											
	15A	SEAT–HTR																				
	15A	STOP											●									
	20A	WIPER																				
	30A	DEFOG																				
	30A	DOOR									●											
②	7.5A	ALT–S																				
	7.5A	DOME				●				●	●											
	7.5A	DRL																				
	7.5A	TRAC											●									
	15A	FOG																				
	15A	HAZ–HORN									●											
	15A	HEAD (LH) *2																				
	15A	HEAD (LH–LWR) *1																				
	15A	HEAD (LH–UPR) *1																				
	15A	HEAD (RH) *2																				
	15A	HEAD (RH–LWR) *1																				
	15A	HEAD (RH–UPR) *1																				
	20A	RAD No. 1																				
	30A	ABS No. 2																				
	30A	EFI No. 1														●	●	●	●	●	●	●
	30A	EFI No. 2																				
	30A	FAN																				
	50A	HTR																				
	50A	MAIN									●											
	60A	ABS No. 1																				
	60A	POWER									●											

* These are the page numbers of the first page on which the related system is shown.
The part indicated is located somewhere in the system, not necessarily on the page indicated here.

[LOCATION] (1) : J/B No. 1 (See page 20) (2) : R/B No. 2 (See page 22) (3) : R/B No. 4 (See page 23)

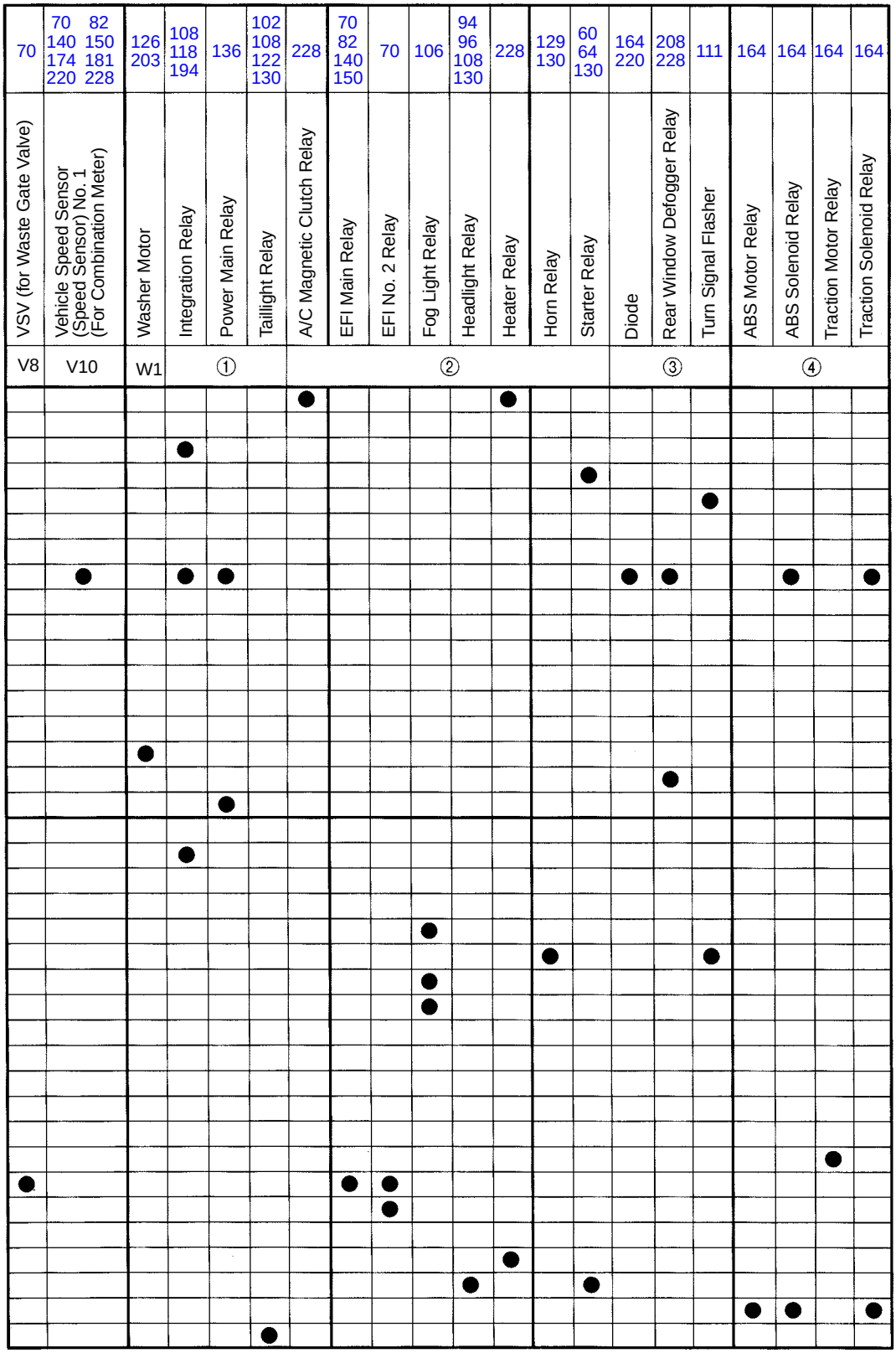

: R/B No. 5 (See page 23)

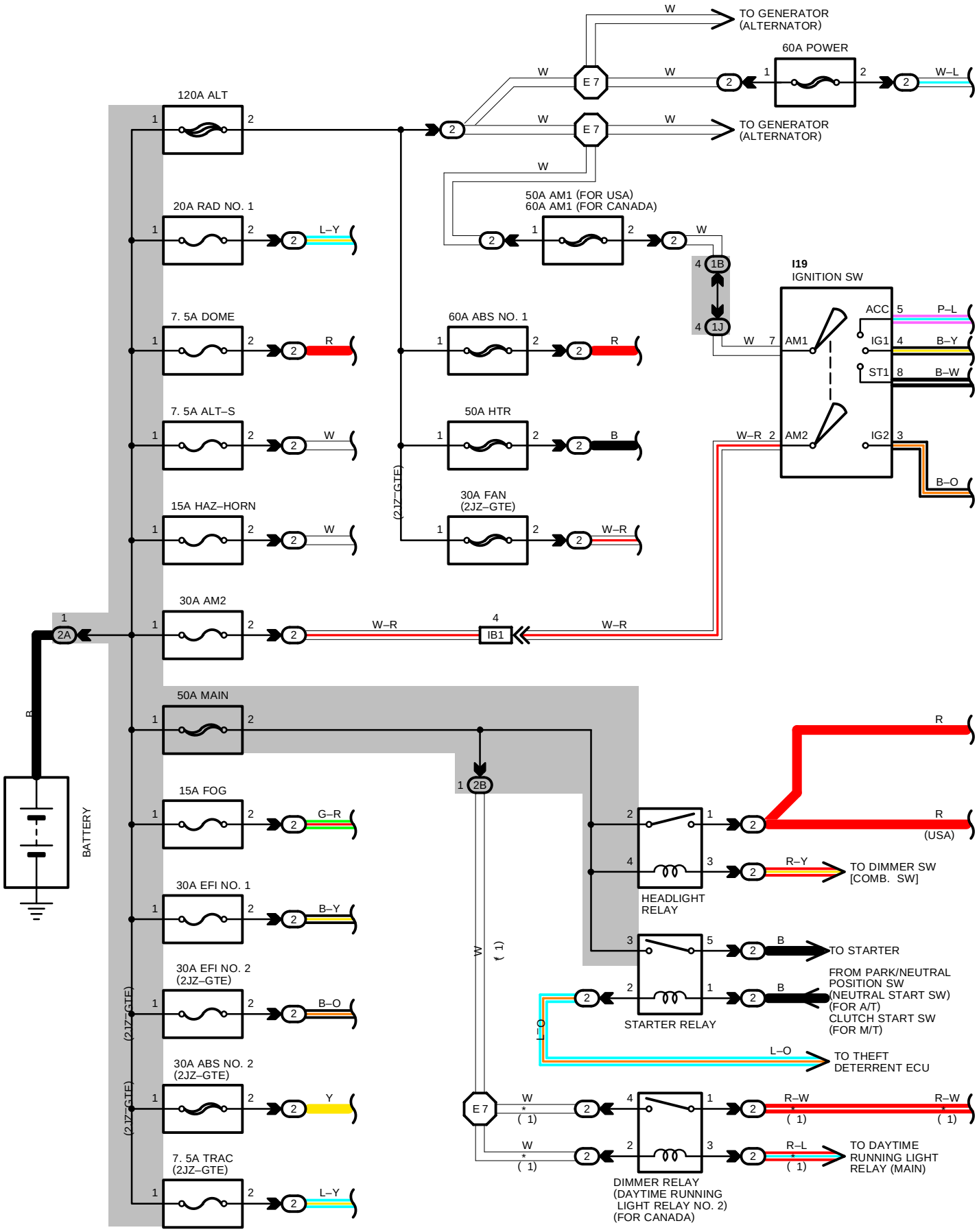
W
TO GENERATOR (ALTERNATOR)
60A POWER
W
E 7
W
W–L
120A ALT
W
E 7
W
TO GENERATOR (ALTERNATOR)
W
50A AM1 (FOR USA)
60A AM1 (FOR CANADA)
20A RAD NO. 1
L–Y
W
4 1B
4 1J
I19
IGNITION SW
7. 5A DOME
60A ABS NO. 1
R
W 7 AM1
ACC 5 P–L
IG1 4 B–Y
ST1 8 B–W
7. 5A ALT–S
50A HTR
W
B
W–R 2 AM2
IG2 3
B–O
15A HAZ–HORN
30A FAN (2JZ–GTE)
W
W–R
(2JZ–GTE)
30A AM2
W–R
4 IB1
W–R
1 2A
50A MAIN
1 2B
BATTERY
R
15A FOG
G–R
R
R
(USA)
30A EFI NO. 1
B–Y
R–Y
TO DIMMER SW [COMB. SW]
HEADLIGHT RELAY
30A EFI NO. 2 (2JZ–GTE)
B–O
B
TO STARTER
W
(1)
FROM PARK/NEUTRAL POSITION SW (NEUTRAL START SW) (FOR A/T) CLUTCH START SW (FOR M/T)
B
STARTER RELAY
L–O
L–O
TO THEFT DETERRENT ECU
30A ABS NO. 2 (2JZ–GTE)
Y
E 7
W
(1)
R–W
(1)
R–W
(1)
W
(1)
R–L
(1)
TO DAYTIME RUNNING LIGHT RELAY (MAIN)
7. 5A TRAC (2JZ–GTE)
L–Y
DIMMER RELAY (DAYTIME RUNNING LIGHT RELAY NO. 2) (FOR CANADA)

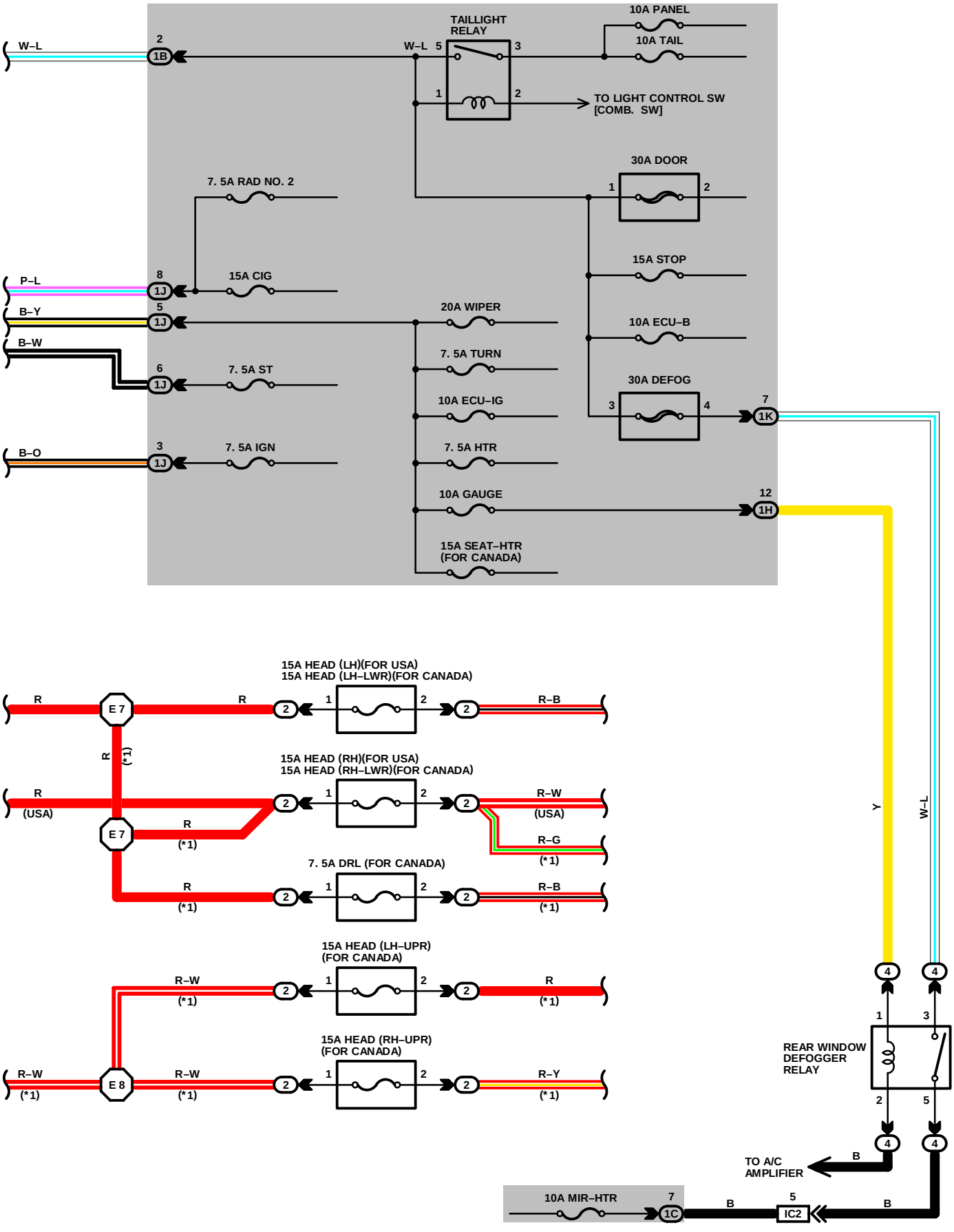
TAILLIGHT RELAY
10A PANEL
10A TAIL
W–L
2
1B
W–L 5
3
1
2
TO LIGHT CONTROL SW [COMB. SW]
30A DOOR
1
2
7. 5A RAD NO. 2
15A STOP
P–L
8
1J
15A CIG
B–Y
5
1J
20A WIPER
10A ECU–B
B–W
7. 5A TURN
6
1J
7. 5A ST
30A DEFOG
3
4
7
1K
10A ECU–IG
B–O
3
1J
7. 5A IGN
7. 5A HTR
10A GAUGE
12
1H
15A SEAT–HTR (FOR CANADA)
15A HEAD (LH)(FOR USA)
15A HEAD (LH–LWR)(FOR CANADA)
R
E 7
R
1
2
2
2
R–B
R
(*1)
15A HEAD (RH)(FOR USA)
15A HEAD (RH–LWR)(FOR CANADA)
R
(USA)
R–W
(USA)
R–G
(*1)
R
(*1)
7. 5A DRL (FOR CANADA)
R
(*1)
R–B
(*1)
15A HEAD (LH–UPR)
(FOR CANADA)
R–W
(*1)
R
(*1)
15A HEAD (RH–UPR)
(FOR CANADA)
R–W
(*1)
E 8
R–W
(*1)
R–Y
(*1)
Y
W–L
4
4
1
3
REAR WINDOW DEFOGGER RELAY
2
5
4
4
TO A/C AMPLIFIER
B
10A MIR–HTR
7
1C
B
5
IC2
B

POWER SOURCE

SERVICE HINTS

HEADLIGHT RELAY (FOR USA)
2–1 : CLOSED WITH LIGHT CONTROL SW AT **HEAD** POSITION OR DIMMER SW AT **FLASH** POSITION

HEADLIGHT RELAY (FOR CANADA)
2–1 : CLOSED WITH LIGHT CONTROL SW AT **HEAD** POSITION OR DIMMER SW AT **FLASH** POSITION
: CLOSED WITH ENGINE RUNNING AND PARKING BRAKE LEVER RELEASED (PARKING BRAKE SW OFF)

TAILLIGHT RELAY
5–3: CLOSED WITH LIGHT CONTROL SW AT **TAIL** OR **HEAD** POSITION

I19 IGNITION SW
7–5 : CLOSED WITH IGNITION KEY AT **ACC** OR **ON** POSITION
7–4 : CLOSED WITH IGNITION KEY AT **ON** OR **ST** POSITION
2–3 : CLOSED WITH IGNITION KEY AT **ON** OR **ST** POSITION
7–8 : CLOSED WITH IGNITION KEY AT **ST** POSITION

: PARTS LOCATION

CODE	SEE PAGE	CODE	SEE PAGE	CODE	SEE PAGE
I19	29				

: RELAY BLOCKS

CODE	SEE PAGE	RELAY BLOCKS (RELAY BLOCK LOCATION)
2	22	R/B NO. 2 (ENGINE COMPARTMENT LEFT)
4	23	R/B NO. 4 (LEFT KICK PANEL)

: JUNCTION BLOCK AND WIRE HARNESS CONNECTOR

CODE	SEE PAGE	JUNCTION BLOCK AND WIRE HARNESS (CONNECTOR LOCATION)
1B	20	ENGINE ROOM MAIN WIRE AND J/B NO. 1 (LEFT KICK PANEL)
1C	20	FLOOR NO. 2 WIRE AND J/B NO. 1 (LEFT KICK PANEL)
1H	20	COWL WIRE AND J/B NO. 1 (LEFT KICK PANEL)
1J		
1K		
2A	22	BATTERY AND J/B NO. 2 (ENGINE COMPARTMENT LEFT)
2B	22	ENGINE ROOM MAIN WIRE AND J/B NO. 2 (ENGINE COMPARTMENT LEFT)

: CONNECTOR JOINING WIRE HARNESS AND WIRE HARNESS

CODE	SEE PAGE	JOINING WIRE HARNESS AND WIRE HARNESS (CONNECTOR LOCATION)
IB1	36	ENGINE ROOM MAIN WIRE AND COWL WIRE (LEFT KICK PANEL)
IC2	36	FLOOR NO. 2 WIRE AND COWL WIRE (LEFT KICK PANEL)

: SPLICE POINTS

CODE	SEE PAGE	WIRE HARNESS WITH SPLICE POINTS	CODE	SEE PAGE	WIRE HARNESS WITH SPLICE POINTS
E 7	32	ENGINE ROOM MAIN WIRE	**E 8**	32	ENGINE ROOM MAIN WIRE

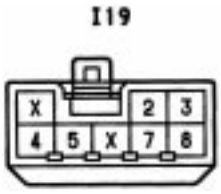

STARTING AND IGNITION (FOR 2JZ–GTE)

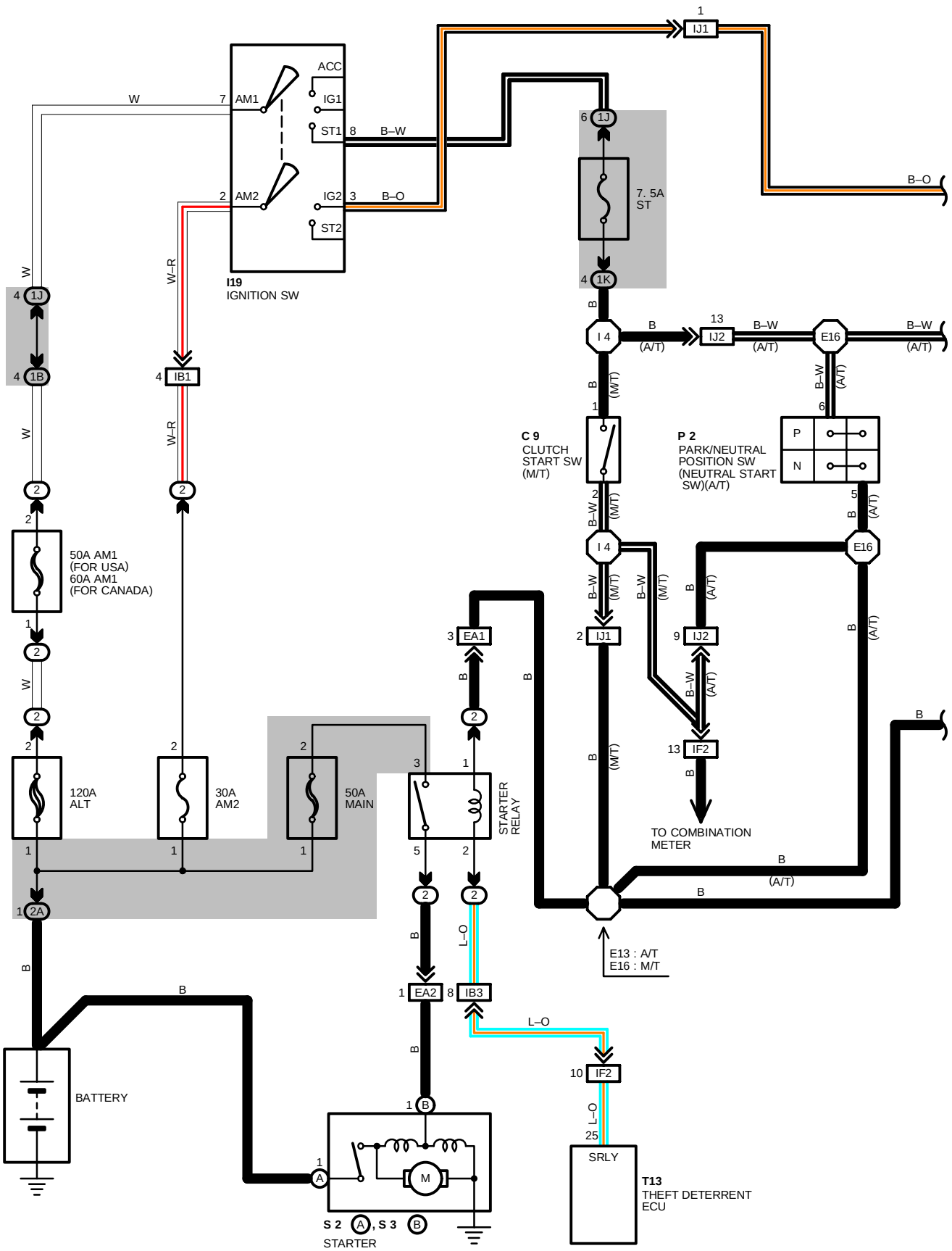

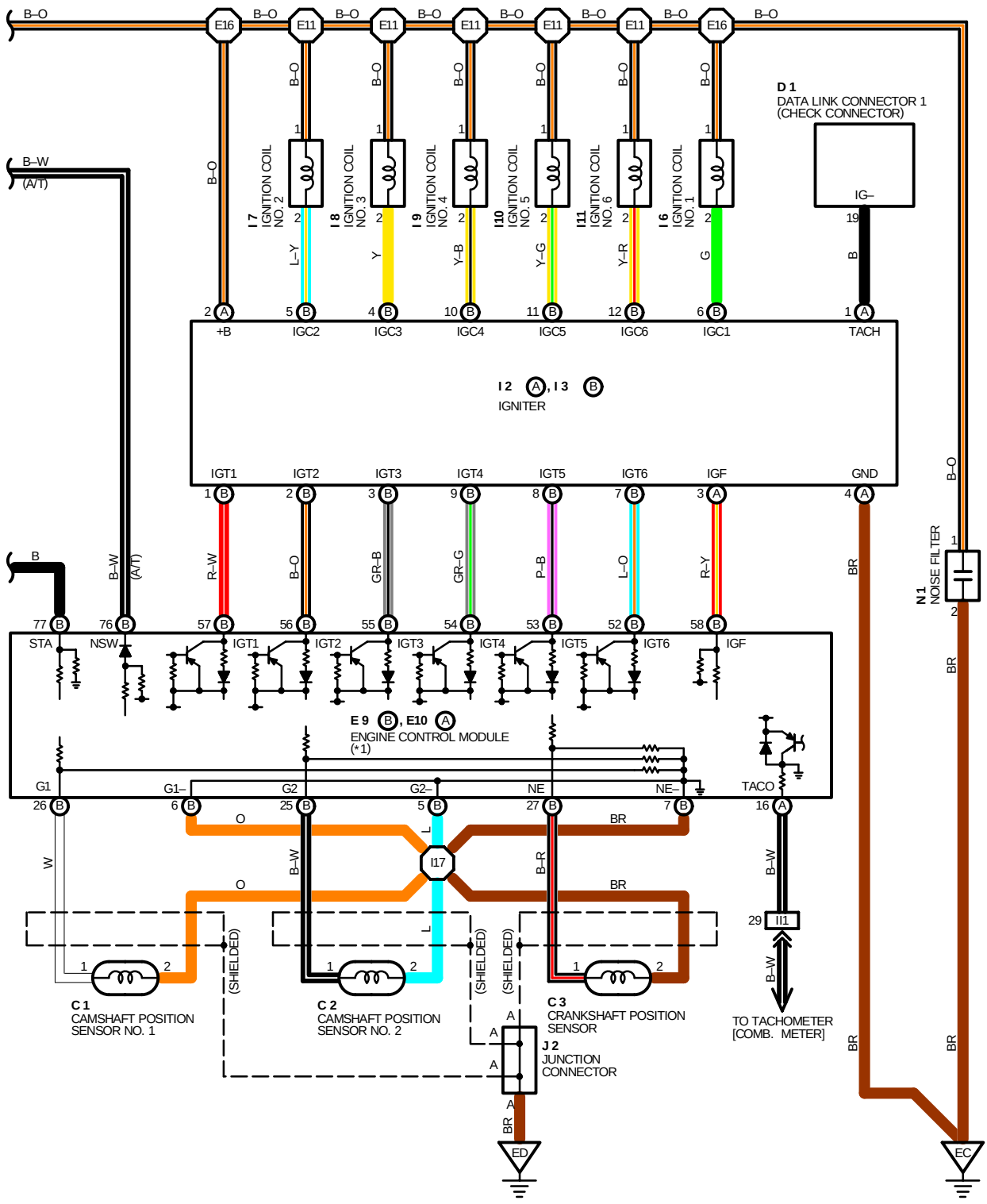
B–O
E16
E11
B–W
(A/T)
I7 IGNITION COIL NO. 2
I8 IGNITION COIL NO. 3
I9 IGNITION COIL NO. 4
I10 IGNITION COIL NO. 5
I11 IGNITION COIL NO. 6
I6 IGNITION COIL NO. 1
L–Y
Y
Y–B
Y–G
Y–R
G
D1
DATA LINK CONNECTOR 1
(CHECK CONNECTOR)
IG–
19
B
+B
IGC2
IGC3
IGC4
IGC5
IGC6
IGC1
TACH
I2 A, I3 B
IGNITER
IGT1
IGT2
IGT3
IGT4
IGT5
IGT6
IGF
GND
R–W
GR–B
GR–G
P–B
L–O
R–Y
BR
N1
NOISE FILTER
STA
NSW
E9 B, E10 A
ENGINE CONTROL MODULE
(*1)
G1
G1–
G2
G2–
NE
NE–
TACO
O
W
L
I17
B–R
I11
TO TACHOMETER
[COMB. METER]
C1
CAMSHAFT POSITION
SENSOR NO. 1
C2
CAMSHAFT POSITION
SENSOR NO. 2
C3
CRANKSHAFT POSITION
SENSOR
(SHIELDED)
J2
JUNCTION
CONNECTOR
ED
EC

STARTING AND IGNITION (FOR 2JZ–GTE)

SERVICE HINTS

I19 IGNITION SW
7–8 : CLOSED WITH IGNITION SW AT **ST** POSITION
2–3 : CLOSED WITH IGNITION SW AT **ON** OR **ST** POSITION

P 2 PARK/NEUTRAL POSITION SW (NEUTRAL START SW) (A/T)
6–5 : CLOSED WITH A/T SHIFT LEVER IN **P** OR **N** POSITION

C 9 CLUTCH START SW (M/T)
1–2 : CLOSED WITH CLUTCH PEDAL FULLY DEPRESSED

S 2(A), S 3(B) STARTER
POINTS CLOSED WITH PARK/NEUTRAL POSITION SW (NEUTRAL START SW) ON AND IGNITION SW AT **ST** POSITION (A/T)
POINTS CLOSED WITH CLUTCH START SW ON AND IGNITION SW AT **ST** POSITION (M/T)

○ : PARTS LOCATION

CODE	SEE PAGE	CODE	SEE PAGE	CODE	SEE PAGE
C 1	24	**I 3** B	25	**J 2**	29
C 2	24	**I 6**	25	**N 1**	25 (2JZ–GTE)
C 3	24	**I 7**	25	**P 2**	25 (2JZ–GTE)
C 9	28	**I 8**	25	**S 2** A	25 (2JZ–GTE)
D 1	24 (2JZ–GTE)	**I 9**	25	**S 3** B	25 (2JZ–GTE)
E 9 B	29	**I10**	25	**T13**	29
E10 A	29	**I11**	25		
I 2 A	25	**I19**	29		

⬭ : RELAY BLOCKS

CODE	SEE PAGE	RELAY BLOCKS (RELAY BLOCK LOCATION)
2	22	R/B NO. 2 (ENGINE COMPARTMENT LEFT)

⬭ : JUNCTION BLOCK AND WIRE HARNESS CONNECTOR

CODE	SEE PAGE	JUNCTION BLOCK AND WIRE HARNESS (CONNECTOR LOCATION)
1B	20	ENGINE ROOM MAIN WIRE AND J/B NO. 1 (LEFT KICK PANEL)
1J	20	COWL WIRE AND J/B NO. 1 (LEFT KICK PANEL)
1K		
2A	22	BATTERY AND J/B NO. 2 (ENGINE COMPARTMENT LEFT)

▭ : CONNECTOR JOINING WIRE HARNESS AND WIRE HARNESS

CODE	SEE PAGE	JOINING WIRE HARNESS AND WIRE HARNESS (CONNECTOR LOCATION)
EA1	32 (2JZ–GTE)	ENGINE WIRE AND ENGINE ROOM MAIN WIRE (NEAR THE R/B NO. 2)
EA2	32	
IB1	36	ENGINE ROOM MAIN WIRE AND COWL WIRE (LEFT KICK PANEL)
IB3		
IF2	36	INSTRUMENT PANEL WIRE AND COWL WIRE (INSTRUMENT PANEL REINFORCEMENT LH)
II1	38	ENGINE WIRE AND INSTRUMENT PANEL WIRE (RIGHT KICK PANEL)
IJ1	38	ENGINE WIRE AND COWL WIRE (RIGHT KICK PANEL)
IJ2		

▽ : GROUND POINTS

CODE	SEE PAGE	GROUND POINTS LOCATION
EC	32 (2JZ–GTE)	FRONT SIDE OF INTAKE MANIFOLD
ED	32 (2JZ–GTE)	REAR SIDE OF INTAKE MANIFOLD

⬡ : SPLICE POINTS

CODE	SEE PAGE	WIRE HARNESS WITH SPLICE POINTS	CODE	SEE PAGE	WIRE HARNESS WITH SPLICE POINTS
E11	32	ENGINE WIRE	**I 4**	38	COWL WIRE
E13			**I17**	38	ENGINE WIRE
E16					

C 1 BLACK



C 2 BLACK



C 3 DARK GRAY



C 9

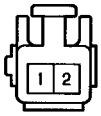

D 1 BLACK

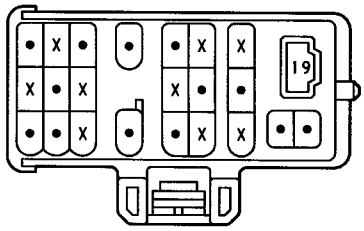

E 9 (B) DARK GRAY

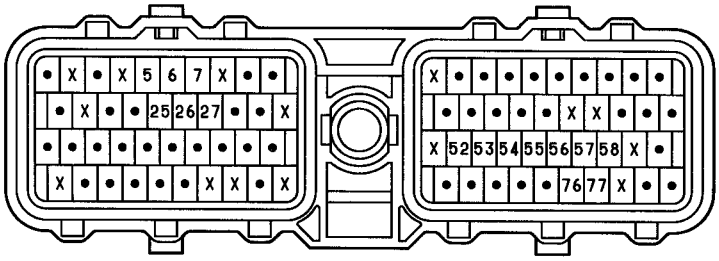

E10 (A) DARK GRAY

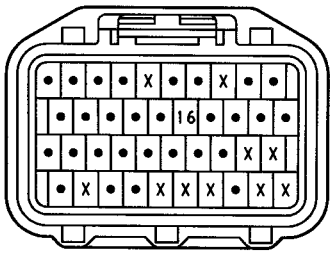

I 2 (A) BLACK



I 3 (B) BLACK

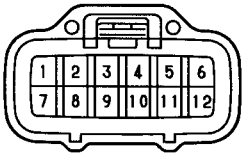

I 6, I 7, I 8
I 9, I10, I11 BLACK

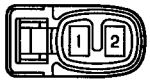

I19

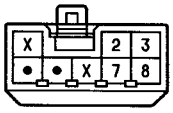

J 2

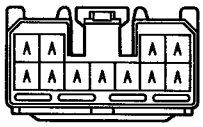

(HINT:SEE PAGE 7)

N 1 GRAY



P 2 GRAY

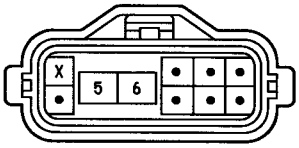

S 2 (A)

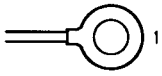

S 3 (B) BLACK



T13 ORANGE

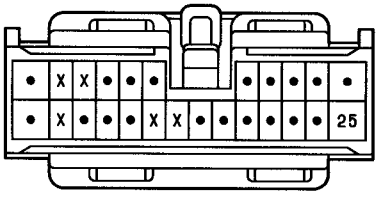

STARTING AND IGNITION (FOR 2JZ–GE)

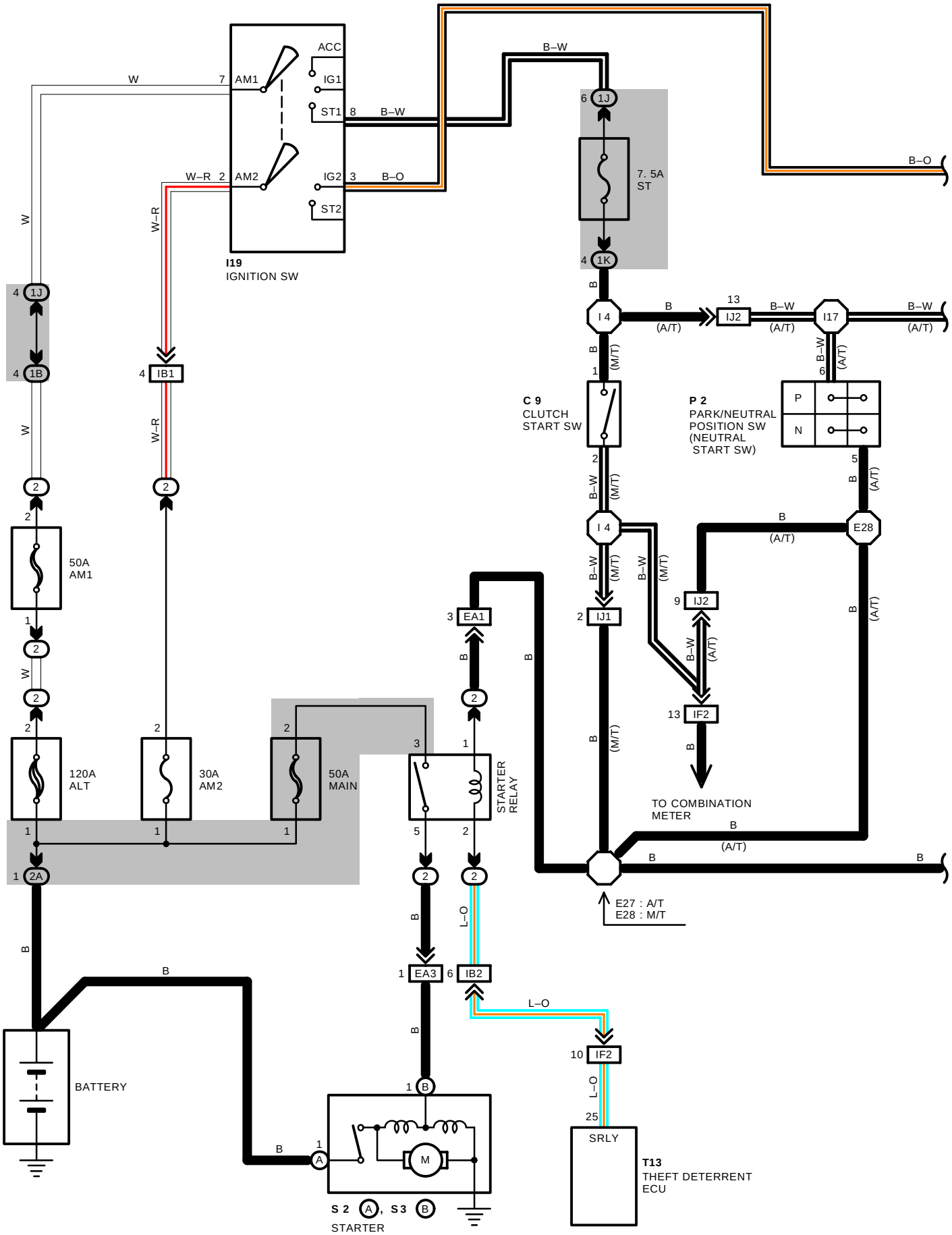

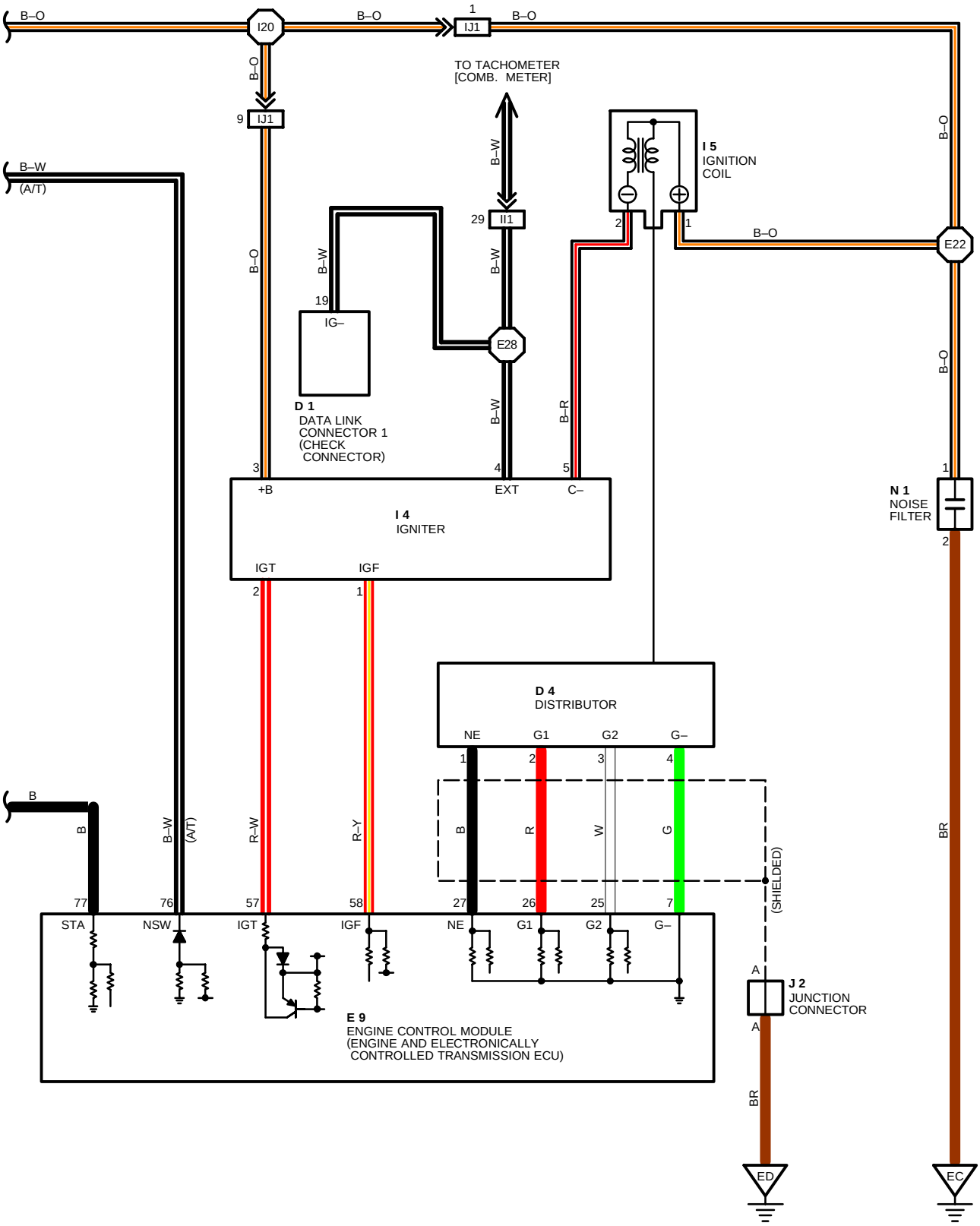
B–O
I20
B–O
1
IJ1
B–O
TO TACHOMETER
[COMB. METER]
B–O
9
IJ1
B–W
(A/T)
B–W
29
II1
I 5
IGNITION
COIL
B–O
B–O
B–W
B–W
19
IG–
E28
2
1
B–O
E22
B–O
D 1
DATA LINK
CONNECTOR 1
(CHECK
CONNECTOR)
B–W
B–R
3
4
5
1
+B
EXT
C–
I 4
IGNITER
N 1
NOISE
FILTER
2
IGT
IGF
2
1
D 4
DISTRIBUTOR
NE
G1
G2
G–
1
2
3
4
B
R
W
G
(SHIELDED)
B
B
B–W
(A/T)
R–W
R–Y
BR
77
76
57
58
27
26
25
7
STA
NSW
IGT
IGF
NE
G1
G2
G–
A
J 2
JUNCTION
CONNECTOR
A
BR
E 9
ENGINE CONTROL MODULE
(ENGINE AND ELECTRONICALLY
CONTROLLED TRANSMISSION ECU)
ED
EC

STARTING AND IGNITION (FOR 2JZ–GE)

SERVICE HINTS

I19 IGNITION SW
7–8 : CLOSED WITH IGNITION SW AT **ST** POSITION
2–3 : CLOSED WITH IGNITION SW AT **ON** OR **ST** POSITION

P 2 PARK/NEUTRAL POSITION SW (NEUTRAL START SW) (A/T)
6–5 : CLOSED WITH A/T SHIFT LEVER IN **P** OR **N** POSITION

C 9 CLUTCH START SW
1–2 : CLOSED WITH CLUTCH PEDAL FULLY DEPRESSED

S 2(A), S 3(B) STARTER
POINTS CLOSED WITH PARK/NEUTRAL POSITION SW (NEUTRAL START SW) ON AND IGNITION SW AT **ST** POSITION (A/T)
POINTS CLOSED WITH CLUTCH START SW ON AND IGNITION SW AT **ST** POSITION (M/T)

: PARTS LOCATION

CODE	SEE PAGE	CODE	SEE PAGE	CODE		SEE PAGE
C 9	28	**I 5**	27	**S 2**	A	27 (2JZ–GE)
D 1	26 (2JZ–GE)	**I19**	29	**S 3**	B	27 (2JZ–GE)
D 4	26	**J 2**	29	**T13**		29
E 9	29	**N 1**	27 (2JZ–GE)			
I 4	27	**P 2**	27 (2JZ–GE)			

: RELAY BLOCKS

CODE	SEE PAGE	RELAY BLOCKS (RELAY BLOCK LOCATION)
2	22	R/B NO. 2 (ENGINE COMPARTMENT LEFT)

: JUNCTION BLOCK AND WIRE HARNESS CONNECTOR

CODE	SEE PAGE	JUNCTION BLOCK AND WIRE HARNESS (CONNECTOR LOCATION)
1B	20	ENGINE ROOM MAIN WIRE AND J/B NO. 1 (LEFT KICK PANEL)
1J	20	COWL WIRE AND J/B NO. 1 (LEFT KICK PANEL)
1K		
2A	22	BATTERY AND J/B NO. 2 (ENGINE COMPARTMENT LEFT)

: CONNECTOR JOINING WIRE HARNESS AND WIRE HARNESS

CODE	SEE PAGE	JOINING WIRE HARNESS AND WIRE HARNESS (CONNECTOR LOCATION)
EA1	34 (2JZ–GE)	ENGINE WIRE AND ENGINE ROOM MAIN WIRE (NEAR THE R/B NO. 2)
EA3	34	
IB1	36	ENGINE ROOM MAIN WIRE AND COWL WIRE (LEFT KICK PANEL)
IB2		
IF2	36	INSTRUMENT PANEL WIRE AND COWL WIRE (INSTRUMENT PANEL REINFORCEMENT LH)
II1	38	ENGINE WIRE AND INSTRUMENT PANEL WIRE (RIGHT KICK PANEL)
IJ1	38	ENGINE WIRE AND COWL WIRE (RIGHT KICK PANEL)
IJ2		

: GROUND POINTS

CODE	SEE PAGE	GROUND POINTS LOCATION
EC	34 (2JZ–GE)	FRONT SIDE OF INTAKE MANIFOLD
ED	34 (2JZ–GE)	REAR SIDE OF INTAKE MANIFOLD

: SPLICE POINTS

CODE	SEE PAGE	WIRE HARNESS WITH SPLICE POINTS	CODE	SEE PAGE	WIRE HARNESS WITH SPLICE POINTS
E22	34	ENGINE WIRE	**I 4**	38	COWL WIRE
E27			**I17**	38	ENGINE WIRE
E28			**I20**	38	COWL WIRE

C 9

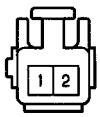

D 1 BLACK

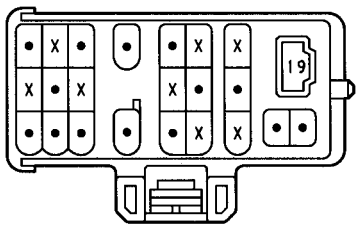

D 4 BLACK



E 9 DARK GRAY

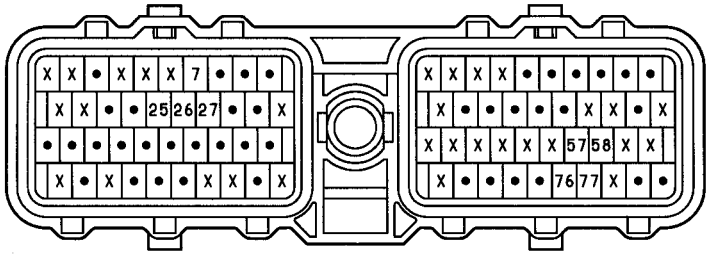

I 4 BLACK

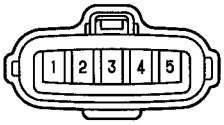

I 5 BLACK

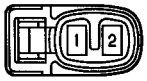

I19

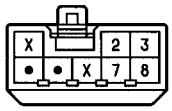

J 2

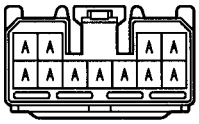

(HINT:SEE PAGE 7)

N 1 GRAY

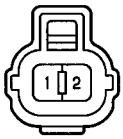

P 2 GRAY

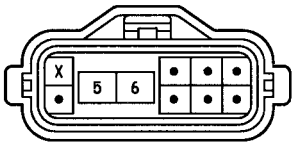

S 2 (A)

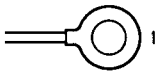

S 3 (B) BLACK



T13 ORANGE

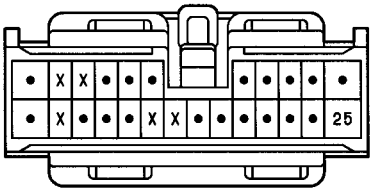

*1 : 2JZ–GTE
*2 : 2JZ–GE

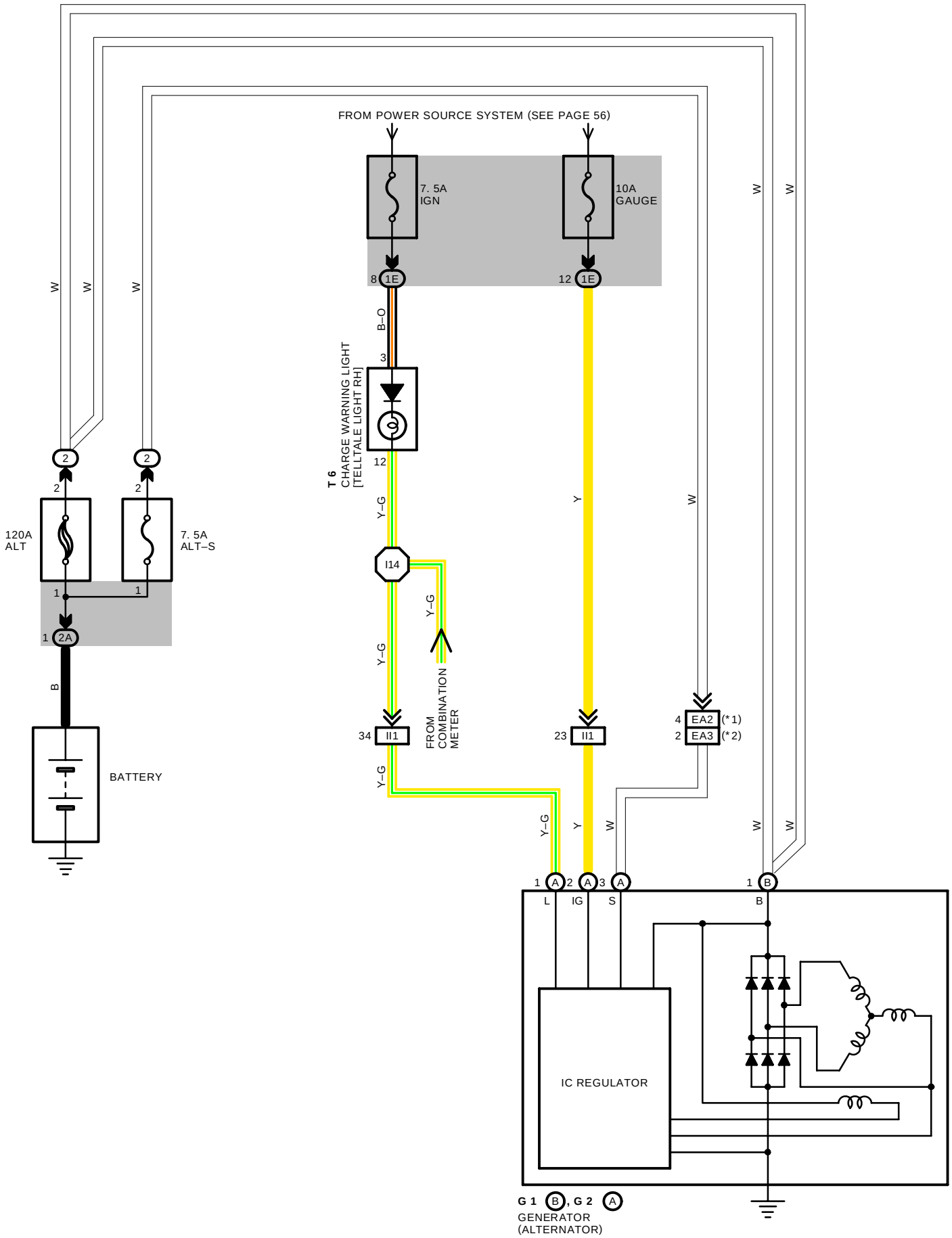

SERVICE HINTS

G 2(A) GENERATOR (ALTERNATOR)

(A) 3–GROUND: **13.9–15.1** VOLTS WITH ENGINE RUNNING AT **2000** RPM AND **25**˚C (**77**˚F)
13.5–14.3 VOLTS WITH ENGINE RUNNING AT **5000** RPM AND **115**˚C (**239**˚F)
(A) 1–GROUND: **0–4** VOLTS WITH IGNITION SW AT **ON** POSITION AND ENGINE NOT RUNNING

: PARTS LOCATION

CODE		SEE PAGE	CODE		SEE PAGE	CODE	SEE PAGE
G 1	B	24 (2JZ–GTE)	**G 2**	A	24 (2JZ–GTE)	**T 6**	29
		26 (2JZ–GE)			26 (2JZ–GE)		

: RELAY BLOCKS

CODE	SEE PAGE	RELAY BLOCKS (RELAY BLOCK LOCATION)
2	22	R/B NO. 2 (ENGINE COMPARTMENT LEFT)

: JUNCTION BLOCK AND WIRE HARNESS CONNECTOR

CODE	SEE PAGE	JUNCTION BLOCK AND WIRE HARNESS (CONNECTOR LOCATION)
1E	20	INSTRUMENT PANEL WIRE AND J/B NO. 1 (LEFT KICK PANEL)
2A	22	BATTERY AND J/B NO. 2 (ENGINE COMPARTMENT LEFT)

: CONNECTOR JOINING WIRE HARNESS AND WIRE HARNESS

CODE	SEE PAGE	JOINING WIRE HARNESS AND WIRE HARNESS (CONNECTOR LOCATION)
EA2	32	ENGINE WIRE AND ENGINE ROOM MAIN WIRE (NEAR THE R/B NO. 2)
EA3	34	
II1	38	ENGINE WIRE AND INSTRUMENT PANEL WIRE (RIGHT KICK PANEL)

: SPLICE POINTS

CODE	SEE PAGE	WIRE HARNESS WITH SPLICE POINTS	CODE	SEE PAGE	WIRE HARNESS WITH SPLICE POINTS
I14	38	INSTRUMENT PANEL WIRE			

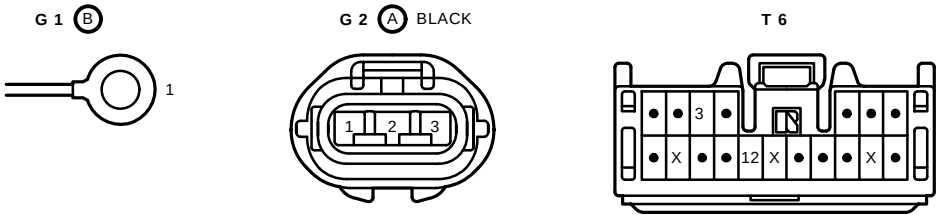

ENGINE CONTROL (FOR 2JZ–GTE)

SYSTEM OUTLINE

THE ENGINE CONTROL SYSTEM UTILIZES A MICROCOMPUTER AND MAINTAINS OVERALL CONTROL OF THE ENGINE, TRANSMISSION ETC. AN OUTLINE OF THE ENGINE CONTROL IS GIVEN HERE.

1. INPUT SIGNALS

(1) ENGINE COOLANT TEMP. (WATER TEMP.) SIGNAL CIRCUIT

THE ENGINE COOLANT TEMP. SENSOR (EFI WATER TEMP. SENSOR) DETECTS THE ENGINE COOLANT TEMP. (WATER TEMP.) AND HAS A BUILT–IN THERMISTOR WITH A RESISTANCE, WHICH VARIES ACCORDING TO THE ENGINE COOLANT TEMP. (WATER TEMP.) WHICH IS INPUT INTO **TERMINAL THW** OF THE ENGINE CONTROL MODULE (ENGINE AND ELECTRONICALLY CONTROLLED TRANSMISSION ECU) AS A CONTROL SIGNAL.

(2) INTAKE AIR TEMP. SIGNAL CIRCUIT

THE INTAKE AIR TEMP. SENSOR IS INSTALLED IN THE MASS AIR FLOW (AIR FLOW METER) AND DETECTS THE INTAKE AIR TEMP. WHICH IS INPUT AS A CONTROL SIGNAL TO **TERMINAL THA** OF THE ENGINE CONTROL MODULE (ENGINE AND ELECTRONICALLY CONTROLLED TRANSMISSION ECU).

(3) OXYGEN DENSITY SIGNAL CIRCUIT

THE OXYGEN DENSITY IN THE EXHAUST EMISSION IS DETECTED BY THE HEATED OXYGEN SENSORS SIDE AND INPUT AS A CONTROL SIGNAL TO **TERMINALS OX1, OX2** OF THE ENGINE CONTROL MODULE (ENGINE AND ELECTRONICALLY CONTROLLED TRANSMISSION ECU).

(4) RPM SIGNAL CIRCUIT

CRANKSHAFT POSITION IS DETECTED BY THE CRANKSHAFT POSITION SENSOR. CRANKSHAFT POSITION IS INPUT AS A CONTROL SIGNAL TO **TERMINAL NE** OF THE ENGINE CONTROL MODULE (ENGINE AND ELECTRONICALLY CONTROLLED TRANSMISSION ECU).

(5) THROTTLE POSITION SIGNAL CIRCUIT

THE THROTTLE POSITION SENSOR DETECTS THE THROTTLE VALVE OPENING ANGLE AS A CONTROL SIGNAL, WHICH IS INPUT INTO **TERMINAL VTA1** OF THE ENGINE CONTROL MODULE (ENGINE AND ELECTRONICALLY CONTROLLED TRANSMISSION ECU). WHEN THE VALVE IS COMPLETELY CLOSED, THE CONTROL SIGNAL IS INPUT INTO **TERMINAL IDL1**.

(6) VEHICLE SPEED CIRCUIT

THE VEHICLE SPEED IS DETECTED BY VEHICLE SPEED SENSOR (SPEED SENSOR) NO.1 INSTALLED IN THE TRANSMISSION AND THE SIGNAL IS INPUT TO **TERMINAL SP1** OF THE ENGINE CONTROL MODULE (ENGINE AND ELECTRONICALLY CONTROLLED TRANSMISSION ECU) VIA THE COMBINATION METER.

(7) NEUTRAL POSITION SIGNAL CIRCUIT

THE PARK/NEUTRAL POSITION SW (NEUTRAL START SW) DETECTS WHETHER THE SHIFT POSITION IS IN “N” AND “P” OR NOT, AND THE SIGNAL IS INPUT INTO **TERMINAL NSW** OF THE ENGINE CONTROL MODULE (ENGINE AND ELECTRONICALLY CONTROLLED TRANSMISSION ECU).

(8) A/C SW SIGNAL CIRCUIT

THE OPERATING VOLTAGE OF THE A/C MAGNETIC CLUTCH IS DETECTED AND THE SIGNAL IS INPUT INTO **TERMINAL ACMG** OF ENGINE CONTROL MODULE (ENGINE AND ELECTRONICALLY CONTROLLED TRANSMISSION ECU) AS A CONTROL SIGNAL.

(9) BATTERY SIGNAL CIRCUIT

VOLTAGE IS CONSTANTLY APPLIED TO **TERMINAL BATT** OF THE ENGINE CONTROL MODULE. (ENGINE AND ELECTRONICALLY CONTROLLED TRANSMISSION ECU). WITH THE IGNITION SW TURNED ON, THE VOLTAGE FOR ENGINE CONTROL MODULE (ENGINE AND ELECTRONICALLY CONTROLLED TRANSMISSION ECU) START–UP POWER SUPPLY IS APPLIED TO **TERMINAL +B** OF THE ENGINE CONTROL MODULE (ENGINE AND ELECTRONICALLY CONTROLLED TRANSMISSION ECU) VIA EFI MAIN RELAY.

THE CURRENT FLOWING THROUGH THE **IGN** FUSE FLOWS TO **TERMINAL IGSW** OF THE ENGINE CONTROL MODULE (ENGINE AND ELECTRONICALLY CONTROLLED TRANSMISSION ECU).

(10) INTAKE AIR VOLUME SIGNAL CIRCUIT

INTAKE AIR VOLUME IS DETECTED BY THE MASS AIR FLOW (AIR FLOW METER) AND THE SIGNAL IS INPUT TO **TERMINAL VG** OF THE ENGINE CONTROL MODULE (ENGINE AND ELECTRONICALLY CONTROLLED TRANSMISSION ECU) AS A CONTROL SIGNAL.

(11) STOP LIGHT SW SIGNAL CIRCUIT

THE STOP LIGHT SW IS USED TO DETECT WHETHER THE VEHICLE IS BRAKING OR NOT AND THE SIGNAL IS INPUT INTO **TERMINAL STP** OF THE ENGINE CONTROL MODULE (ENGINE AND ELECTRONICALLY CONTROLLED TRANSMISSION ECU) AS A CONTROL SIGNAL.

(12) STARTER SIGNAL CIRCUIT

TO CONFIRM WHETHER THE ENGINE IS CRANKING, THE VOLTAGE IS APPLIED TO THE STARTER MOTOR DURING CRANKING IS DETECTED AND THE SIGNAL IS INPUT INTO **TERMINAL STA** OF THE ENGINE CONTROL MODULE (ENGINE AND ELECTRONICALLY CONTROLLED TRANSMISSION ECU) AS A CONTROL SIGNAL.

(13) ENGINE KNOCK SIGNAL CIRCUIT

ENGINE KNOCKING IS DETECTED BY KNOCK SENSOR FRONT AND REAR SIDE AND THE SIGNAL IS INPUT INTO **TERMINALS KNK1** AND **KNK2** AS A CONTROL SIGNAL.

2. CONTROL SYSTEM

* SEQUENTIAL MULTIPORT FUEL INJECTION (ELECTRONIC FUEL INJECTION) SYSTEM

  THE SEQUENTIAL MULTIPORT FUEL INJECTION (ELECTRONIC FUEL INJECTION) SYSTEM MONITORS THE ENGINE CONDITION THROUGH THE SIGNALS INPUT FROM EACH SENSOR (INPUT SIGNALS FROM (1) TO (13) ETC.) TO THE ENGINE CONTROL MODULE (ENGINE AND ELECTRONICALLY CONTROLLED TRANSMISSION ECU). THE BEST FUEL INJECTION TIMING IS DECIDED BASED ON THIS DATA AND THE PROGRAM MEMORIZED BY THE ENGINE CONTROL MODULE (ENGINE AND ELECTRONICALLY CONTROLLED TRANSMISSION ECU), AND THE CONTROL SIGNAL IS OUTPUT TO **TERMINALS #10, #20, #30, 40, #50** AND **#60** OF THE ENGINE CONTROL MODULE (ENGINE AND ELECTRONICALLY CONTROLLED TRANSMISSION ECU) TO OPERATE THE INJECTOR (INJECT THE FUEL). THE SEQUENTIAL MULTIPORT FUEL INJECTION (ELECTRONIC FUEL INJECTION) SYSTEM PRODUCES CONTROLS OF FUEL INJECTION OPERATION BY THE ENGINE CONTROL MODULE (ENGINE AND ELECTRONICALLY CONTROLLED TRANSMISSION ECU) IN RESPONSE TO THE DRIVING CONDITIONS.

* ESA (ELECTRONIC SPARK ADVANCE) SYSTEM

  THE ESA SYSTEM MONITORS THE ENGINE CONDITION THROUGH THE SIGNALS INPUT TO THE ENGINE CONTROL MODULE (ENGINE AND ELECTRONICALLY CONTROLLED TRANSMISSION ECU) FROM EACH SENSOR (INPUT SIGNALS FROM (1), (2), (4) TO (13) ETC.). THE BEST IGNITION TIMING IS DECIDED ACCORDING TO THIS DATA AND THE MEMORIZED DATA IN THE ENGINE CONTROL MODULE (ENGINE AND ELECTRONICALLY CONTROLLED TRANSMISSION ECU) AND THE CONTROL SIGNAL IS OUTPUT TO **TERMINALS IGT1**, **IGT2, IGT3**, **IGT4**, **IGT5** AND **IGT6** THESE SIGNALS CONTROL THE IGNITER TO PROVIDE THE BEST IGNITION TIMING FOR THE DRIVING CONDITIONS.

* HEATED OXYGEN SENSOR HEATER CONTROL SYSTEM

  THE MAIN HEATED OXYGEN SENSOR, SUB HEATED OXYGEN SENSOR HEATER CONTROL SYSTEM TURNS THE HEATER ON WHEN THE INTAKE AIR VOLUME IS LOW (TEMP. OF EXHAUST EMISSIONS IS LOW), AND WARMS UP THE OXYGEN SENSOR TO IMPROVE DETECTION PERFORMANCE OF THE SENSOR. THE ENGINE CONTROL MODULE (ENGINE AND ELECTRONICALLY CONTROLLED TRANSMISSION ECU) EVALUATES THE SIGNALS FROM EACH SENSOR (INPUT SIGNALS FROM (1), (2), (4), (9) TO (11) ETC.), AND OUTPUTS CURRENT TO **TERMINALS HT1**, **HT2** TO CONTROL THE HEATER.

* IDLE AIR CONTROL (IDLE SPEED CONTROL) SYSTEM

  THE IDLE AIR CONTROL (ISC) SYSTEM (STEP MOTOR TYPE) INCREASES THE ENGINE SPEED AND PROVIDES IDLING STABILITY FOR FAST IDLE–UP WHEN THE ENGINE IS COLD, AND WHEN THE IDLE SPEED HAS DROPPED DUE TO ELECTRICAL LOAD AND SO ON. THE ENGINE CONTROL MODULE (ENGINE AND ELECTRONICALLY CONTROLLED TRANSMISSION ECU) EVALUATE THE SIGNALS FROM EACH SENSOR (INPUT SIGNALS FROM (1), (4), (5), (8), (9), (11) ETC.), OUTPUTS CURRENT TO **TERMINALS ISC1, ISC2, ISC3** AND **ISC4** TO CONTROL THE IDLE AIR CONTROL VALVE (ISC VALVE).

* EGR CONTROL SYSTEM

  THE EGR CONTROL SYSTEM DETECTS THE SIGNAL FROM EACH SENSOR (INPUT SIGNALS FROM (1), (4), (9), (10) ETC.), AND OUTPUTS CURRENT TO **TERMINAL EGR** TO CONTROL THE EGR VALVE.

* FUEL PUMP CONTROL SYSTEM

  THE ENGINE CONTROL MODULE (ENGINE AND ELECTRONICALLY CONTROLLED TRANSMISSION ECU) OUTPUTS CURRENT TO **TERMINAL FPC** AND CONTROLS THE FUEL PUMP ECU AND FUEL PUMP DRIVE SPEED IN RESPONSE TO THE DRIVING CONDITIONS.

3. DIAGNOSIS SYSTEM

WITH THE DIAGNOSIS SYSTEM, WHEN THERE IS A MALFUNCTION IN THE ENGINE CONTROL MODULE (ENGINE AND ELECTRONICALLY CONTROLLED TRANSMISSION ECU) SIGNAL SYSTEM, THE MALFUNCTIONING SYSTEM IS RECORDED IN THE MEMORY. THE MALFUNCTIONING SYSTEM CAN BE FOUND BY READING THE CODE DISPLAYED BY THE MALFUNCTION INDICATOR LAMP (CHECK ENGINE WARNING LIGHT).

4. FAIL–SAFE SYSTEM

WHEN A MALFUNCTION HAS OCCURRED IN ANY SYSTEM, IF THERE IS A POSSIBILITY OF ENGINE TROUBLE BEING CAUSED BY CONTINUED CONTROL BASED ON THE SIGNALS FROM THAT SYSTEM, THE FAIL–SAFE SYSTEM EITHER CONTROLS THE SYSTEM BY USING DATA (STANDARD VALUES) RECORDED IN THE ENGINE CONTROL MODULE (ENGINE AND ELECTRONICALLY CONTROLLED TRANSMISSION ECU) MEMORY OR ELSE STOPS THE ENGINE.

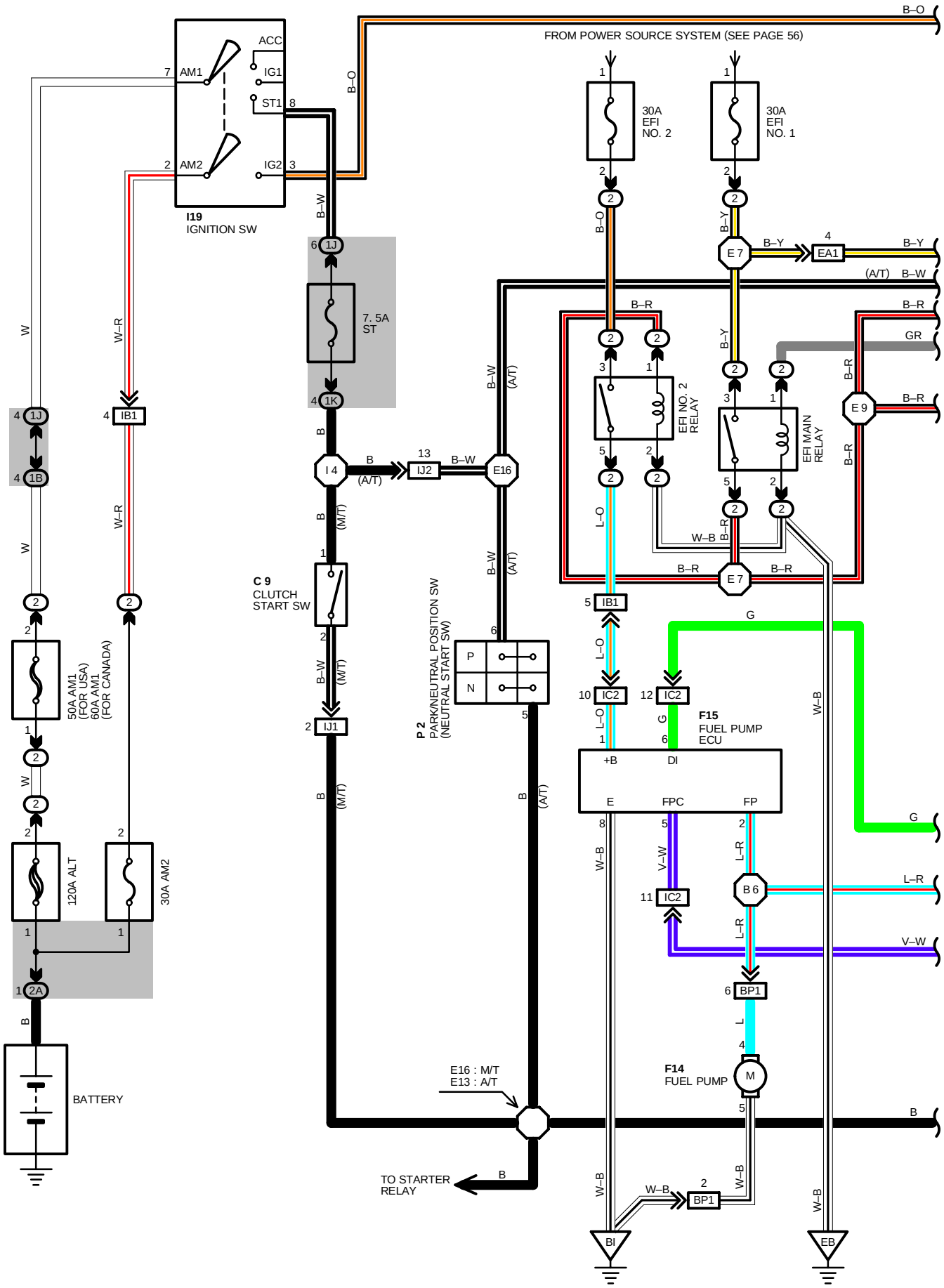
FROM POWER SOURCE SYSTEM (SEE PAGE 56)
B–O
I19
IGNITION SW
ACC
IG1
ST1
IG2
AM1
AM2
30A EFI NO. 2
30A EFI NO. 1
7. 5A ST
EFI NO. 2 RELAY
EFI MAIN RELAY
C 9
CLUTCH START SW
P 2
PARK/NEUTRAL POSITION SW (NEUTRAL START SW)
F15
FUEL PUMP ECU
F14
FUEL PUMP
50A AM1 (FOR USA)
60A AM1 (FOR CANADA)
120A ALT
30A AM2
BATTERY
E16 : M/T
E13 : A/T
TO STARTER RELAY
(A/T)
(M/T)
BI
EB

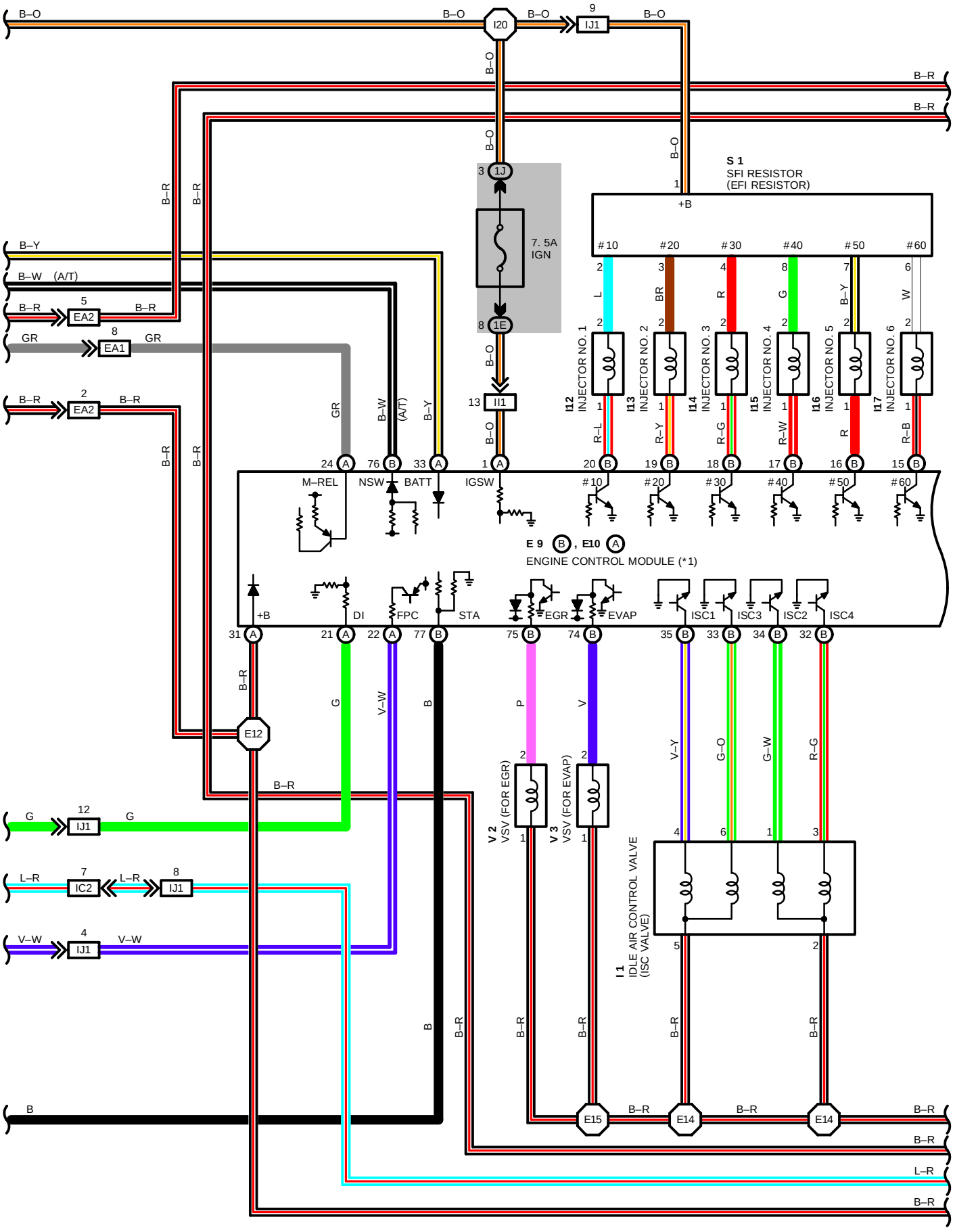
S 1
SFI RESISTOR
(EFI RESISTOR)
+B
7. 5A
IGN
#10
#20
#30
#40
#50
#60
I12 INJECTOR NO. 1
I13 INJECTOR NO. 2
I14 INJECTOR NO. 3
I15 INJECTOR NO. 4
I16 INJECTOR NO. 5
I17 INJECTOR NO. 6
M–REL
NSW
BATT
IGSW
E 9 , E10
ENGINE CONTROL MODULE (*1)
+B
DI
FPC
STA
EGR
EVAP
ISC1
ISC3
ISC2
ISC4
V 2 VSV (FOR EGR)
V 3 VSV (FOR EVAP)
I 1 IDLE AIR CONTROL VALVE (ISC VALVE)
I20
IJ1
1J
1E
II1
EA2
EA1
IC2
E12
E15
E14

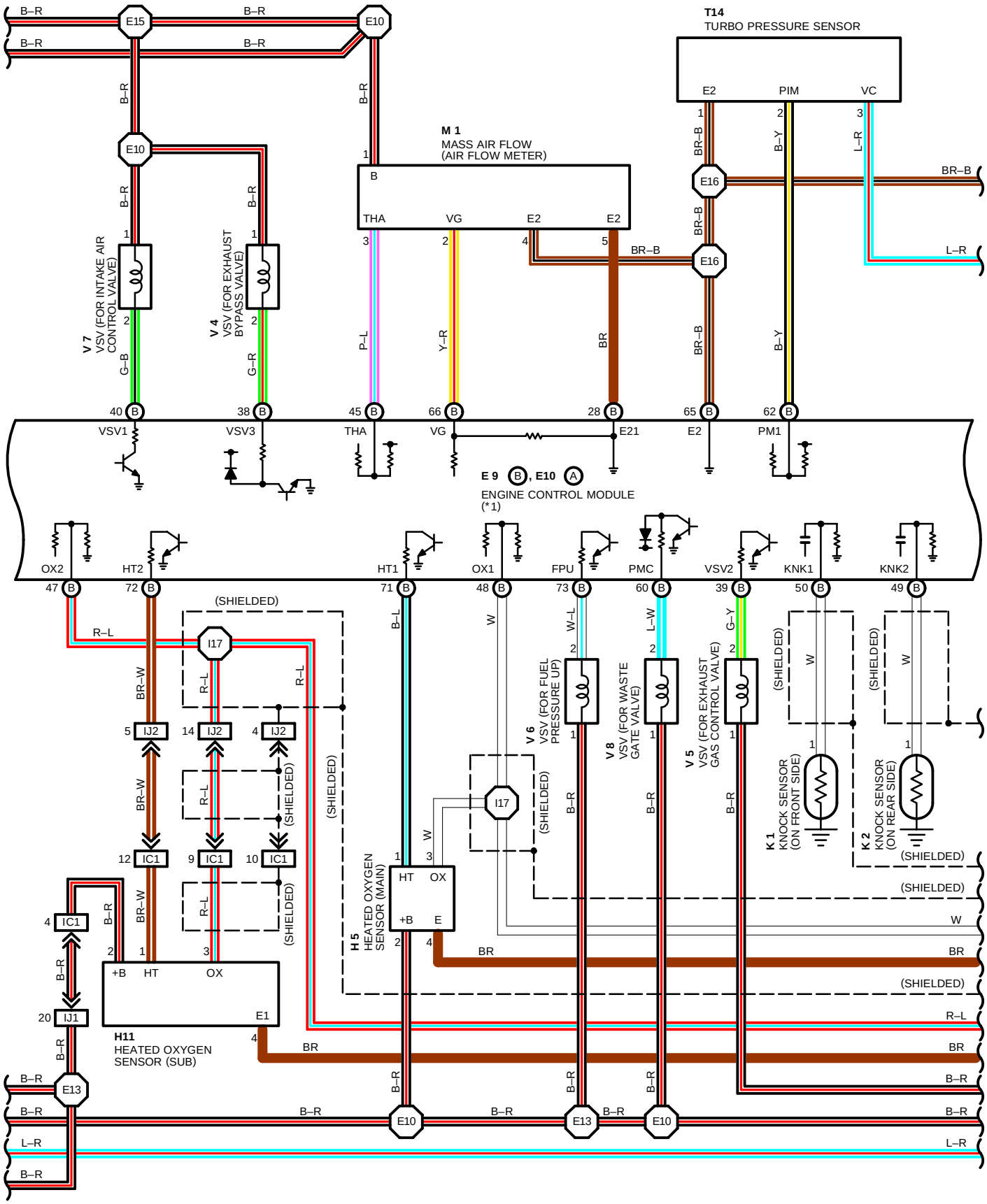
T14
TURBO PRESSURE SENSOR
E2
PIM
VC
M 1
MASS AIR FLOW
(AIR FLOW METER)
THA
VG
E2
E2
V 7
VSV (FOR INTAKE AIR CONTROL VALVE)
V 4
VSV (FOR EXHAUST BYPASS VALVE)
VSV1
VSV3
THA
VG
E21
E2
PM1
E 9 B, E10 A
ENGINE CONTROL MODULE
(*1)
OX2
HT2
HT1
OX1
FPU
PMC
VSV2
KNK1
KNK2
(SHIELDED)
V 6
VSV (FOR FUEL PRESSURE UP)
V 8
VSV (FOR WASTE GATE VALVE)
V 5
VSV (FOR EXHAUST GAS CONTROL VALVE)
K 1
KNOCK SENSOR (ON FRONT SIDE)
K 2
KNOCK SENSOR (ON REAR SIDE)
H 5
HEATED OXYGEN SENSOR (MAIN)
H11
HEATED OXYGEN SENSOR (SUB)
+B
HT
OX
E1
B–R
BR–W
R–L
P–L
Y–R
BR
BR–B
B–Y
L–R
W
W–L
L–W
G–Y
G–B
G–R
B–L

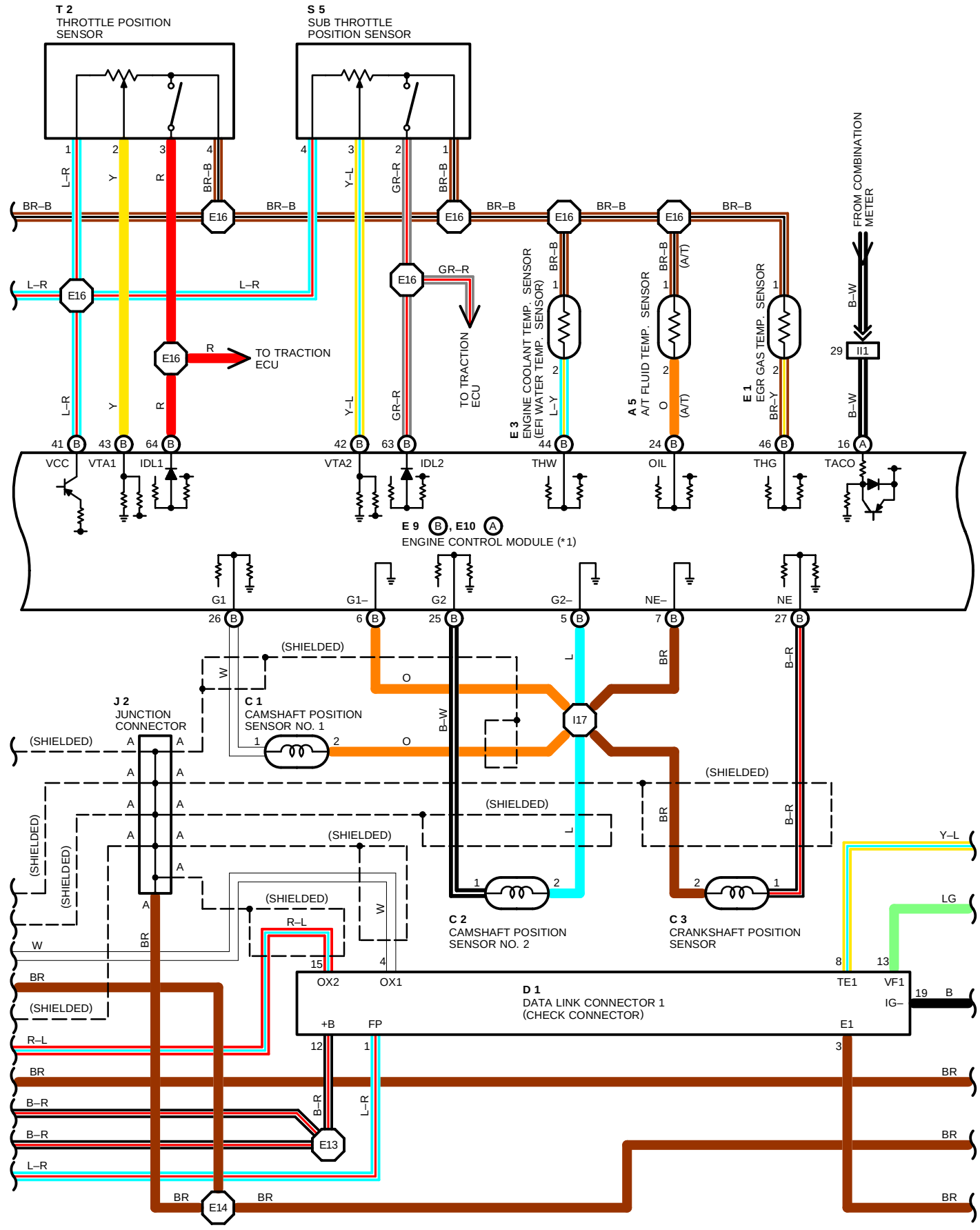
T 2
THROTTLE POSITION SENSOR
S 5
SUB THROTTLE POSITION SENSOR
FROM COMBINATION METER
TO TRACTION ECU
TO TRACTION ECU
E 3
ENGINE COOLANT TEMP. SENSOR (EFI WATER TEMP. SENSOR)
A 5
A/T FLUID TEMP. SENSOR
E 1
EGR GAS TEMP. SENSOR
VCC
VTA1
IDL1
VTA2
IDL2
THW
OIL
THG
TACO
E 9 B, E10 A
ENGINE CONTROL MODULE (*1)
G1
G1–
G2
G2–
NE–
NE
J 2
JUNCTION CONNECTOR
C 1
CAMSHAFT POSITION SENSOR NO. 1
C 2
CAMSHAFT POSITION SENSOR NO. 2
C 3
CRANKSHAFT POSITION SENSOR
D 1
DATA LINK CONNECTOR 1 (CHECK CONNECTOR)
OX2
OX1
+B
FP
TE1
VF1
IG–
E1
(SHIELDED)
E16
E13
E14
I17
I11

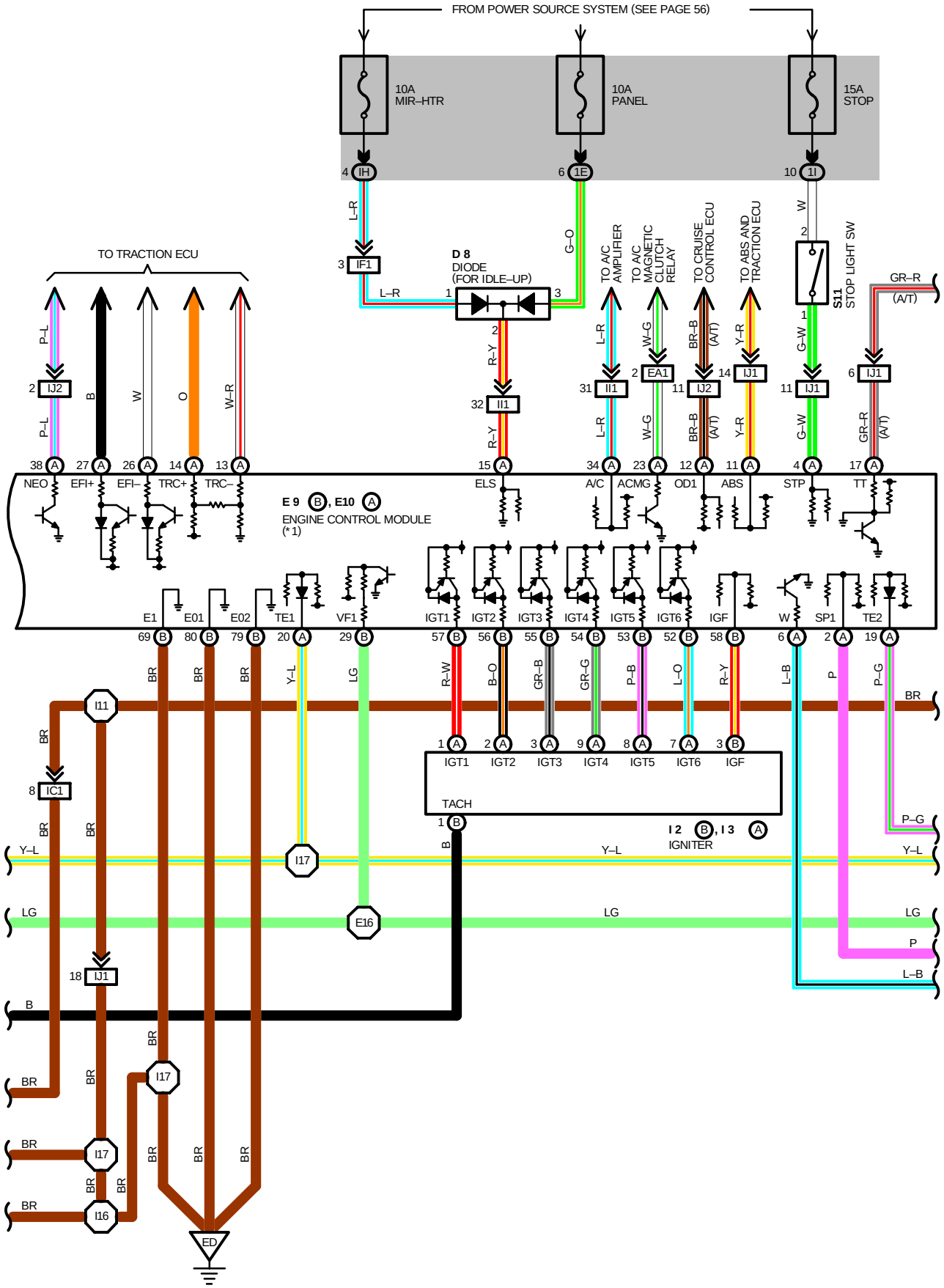
FROM POWER SOURCE SYSTEM (SEE PAGE 56)
10A MIR–HTR
10A PANEL
15A STOP
TO TRACTION ECU
D 8 DIODE (FOR IDLE–UP)
TO A/C AMPLIFIER
TO A/C MAGNETIC CLUTCH RELAY
TO CRUISE CONTROL ECU
TO ABS AND TRACTION ECU
S11 STOP LIGHT SW
E 9 B, E10 A ENGINE CONTROL MODULE (*1)
NEO
EFI+
EFI–
TRC+
TRC–
ELS
A/C
ACMG
OD1
ABS
STP
TT
E1
E01
E02
TE1
VF1
IGT1
IGT2
IGT3
IGT4
IGT5
IGT6
IGF
SP1
TE2
TACH
I2 B, I3 A IGNITER

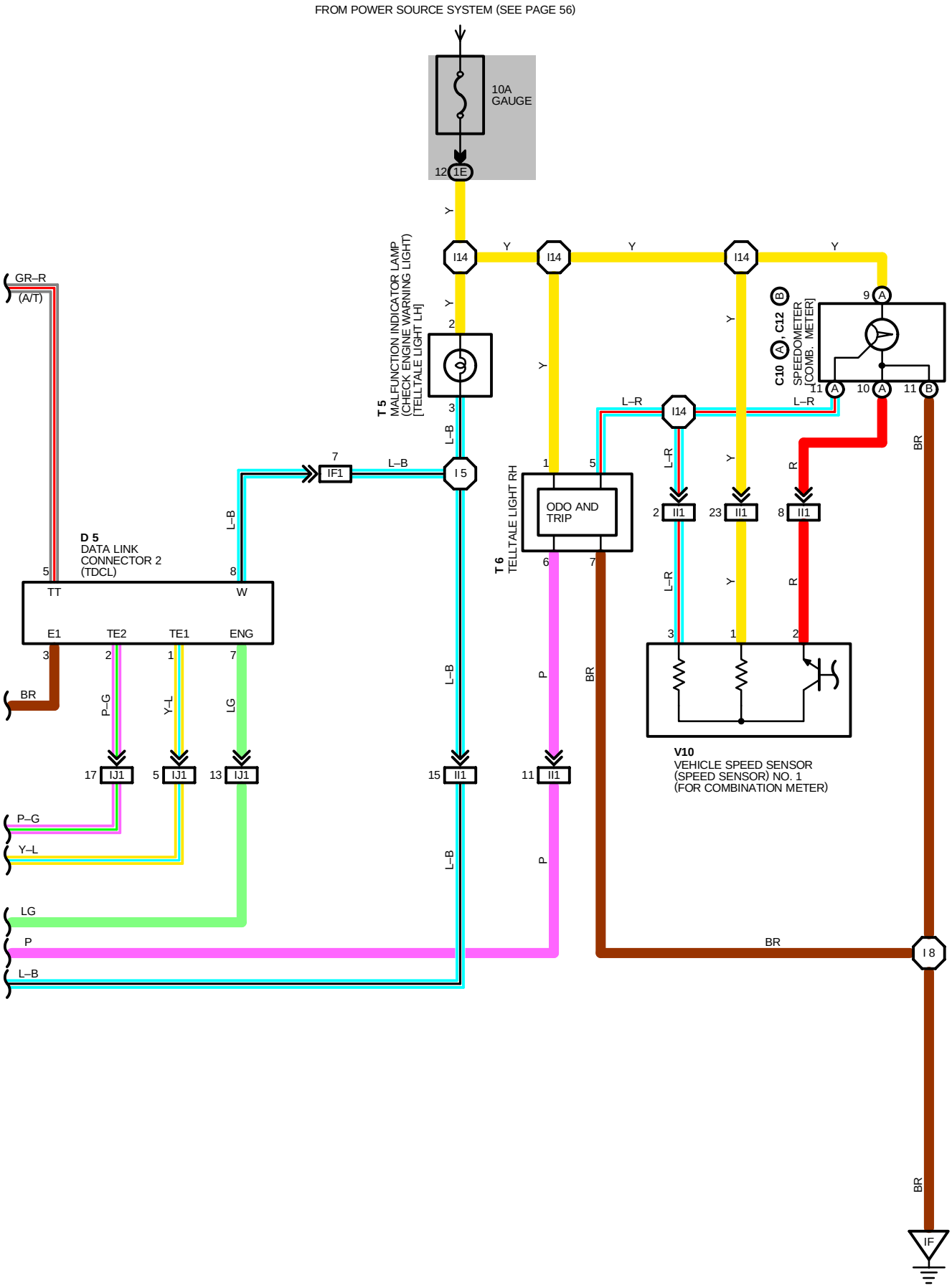
FROM POWER SOURCE SYSTEM (SEE PAGE 56)
10A
GAUGE
12 1E
Y
I14
Y
I14
Y
I14
Y
T 5
MALFUNCTION INDICATOR LAMP
(CHECK ENGINE WARNING LIGHT)
[TELLTALE LIGHT LH]
2
3
L–B
7
IF1
L–B
I 5
C10 , C12
SPEEDOMETER
[COMB. METER]
B
A
9 A
11 A
10 A
11 B
L–R
I14
L–R
BR
GR–R
(A/T)
D 5
DATA LINK
CONNECTOR 2
(TDCL)
5
TT
8
W
E1
TE2
TE1
ENG
3
2
1
7
BR
P–G
Y–L
LG
17 IJ1
5 IJ1
13 IJ1
T 6
TELLTALE LIGHT RH
1
5
ODO AND
TRIP
6
7
L–R
Y
R
2 II1
23 II1
8 II1
3
1
2
V10
VEHICLE SPEED SENSOR
(SPEED SENSOR) NO. 1
(FOR COMBINATION METER)
L–B
P
BR
15 II1
11 II1
P–G
Y–L
LG
P
L–B
BR
I 8
BR
IF

ENGINE CONTROL (FOR 2JZ–GTE)

SERVICE HINTS

EFI MAIN RELAY

(2) 3– **(2)** 5 : CLOSED WITH IGNITION SW AT **ON** POSITION

EFI NO. 2 RELAY

(2) 3– **(2)** 5 : CLOSED WITH IGNITION SW AT **ON** POSITION

E 3 ENGINE COOLANT TEMP. SENSOR (EFI WATER TEMP. SENSOR)

1– 2: **10–20** KΩ (**–20**˚C, **–4**˚F)
4– 7 KΩ (**0**˚C, **32**˚F)
2– 3 KΩ (**20**˚C, **68**˚F)
0.9–1.3 KΩ (**40**˚C, **104**˚F)
0.4–0.7 KΩ (**60**˚C, **140**˚F)
0.2–0.4 KΩ (**80**˚C, **176**˚F)

I 1 IDLE AIR CONTROL VALVE (ISC VALVE)

1, 3– 2: APPROX. **10–30** Ω

4, 6– 5: APPROX. **10–30** Ω

I12, I13, I14, I15, I16, I17 INJECTOR

1– 2: APPROX. **13–8** Ω

T 2 THROTTLE POSITION SENSOR

1– 4: APPROX. **4–9** KΩ

1– 3: **3.3– 10.0** KΩ WITH THROTTLE VALVE FULLY **OPENED** POSITION
0.2– 0.8 KΩ WITH CLEARANCE BETWEEN LEVER AND STOP SCREW **0** MM (**0** IN.)

1– 2: **0–2.3** KΩ WITH CLEARANCE BETWEEN LEVER AND STOP SCREW **0.45** MM (**0.0177** IN.)
INFINITY WITH CLEARANCE BETWEEN LEVER AND STOP SCREW **0.55** MM (**0.0216** IN.)

E 9(B), E10(A) ENGINE CONTROL MODULE (ENGINE AND ELECTRONICALLY CONTROLLED TRANSMISSION ECU)

(VOLTAGE AT ENGINE CONTROL MODULE (ENGINE AND ELECTRONICALLY CONTROLLED TRANSMISSION ECU) WIRING CONNECTORS)

BATT–E1	:	ALWAYS **9**–**14** VOLTS
IGSW–E1	:	**9–14** VOLTS WITH IGNITION SW ON
M–REL–E1	:	**9–14** VOLTS WITH IGNITION SW ON
+B–E1	:	**9–14** VOLTS WITH IGNITION SW ON
IDL1–E2	:	**9–14** VOLTS WITH IGNITION SW ON AND THROTTLE VALVE FULLY OPEN
	:	**0 –1.5** VOLTS WITH IGNITION SW ON AND THROTTLE VALVE FULLY CLOSED
VTA1–E2	:	**0.3– 0.8** VOLTS WITH IGNITION SW ON AND THROTTLE VALVE FULLY CLOSED
	:	**3.2–4.9** VOLTS WITH IGNITION SW ON AND THROTTLE VALVE OPEN
#10, #20, #30–E01, E02	:	PULSE GENERATION (ENGINE IDLING)
#40, #50, #60–E01, E02	:	PULSE GENERATION (ENGINE IDLING)
THA–E2	:	**0.5–3.4** VOLTS WITH IGNITION SW ON AND INTAKE AIR TEMP. **20**˚C **(68**˚F)
THW–E2	:	**0.2–1.0** VOLTS WITH IGNITION SW ON AND COOLANT TEMP. **80**˚C **(176**˚F)
STA–E1	:	**6–14** VOLTS WITH ENGINE CRANKING
ISC1, ISC2, ISC3, ISC4–E1	:	PULSE GENERATION (ENGINE IDLING)
W–E1	:	**9–14** VOLTS WITH ENGINE IDLING
IGF–E1	:	PULSE GENERATION (ENGINE IDLING)
NSW–E1	:	**0–3** VOLTS WITH IGNITION SW ON AND SHIFT LEVER **P** OR **N** POSITION
		9–14 VOLTS WITH IGNITION SW ON AND SHIFT LEVER EXCEPT **P** OR **N** POSITION
SP1	:	PULSE GENERATION
TE1, TE2–E1	:	**9–14** VOLTS WITH IGNITION SW ON
A/C–E1	:	**0–1.5** VOLTS WITH IGNITION SW ON AND A/C OFF
		7.5–14 VOLTS WITH IGNITION SW ON AND A/C ON
ELS–E1	:	**9–14** VOLTS WITH TAILLIGHT ON, DEFOGGER ON
		0–1.5 VOLTS WITH TAILLIGHT OFF, DEFOGGER OFF
STP–E1	:	**7.5–14** VOLTS WITH STOP LIGHT SW ON (BRAKE PEDAL DEPRESSED)
		0–1.5 VOLTS WITH STOP LIGHT SW OFF

(RESISTANCE OF ENGINE CONTROL MODULE (ENGINE AND ELECTRONICALLY CONTROLLED TRANSMISSION ECU) WIRING CONNECTORS)

IDL1–E2	:	INFINITY WITH THROTTLE VALVE OPEN
	:	**0–2.3** KΩ WITH THROTTLE VALVE FULLY CLOSED
VTA1–E2	:	**3.3** KΩ – **10.0** KΩ WITH THROTTLE VALVE FULLY OPEN
	:	**200** Ω **–800** Ω WITH THROTTLE VALVE FULLY CLOSED
VCC–E2	:	**4** KΩ **–9** KΩ
THA–E2	:	**2** KΩ **–3** KΩ WITH INTAKE AIR TEMP. **20**˚C (**68**˚F)
THW–E2	:	**200** Ω**–400** Ω WITH COOLANT TEMP. **80**˚C (**176**˚F)
ISC1, ISC2, ISC3, ISC4– +B	:	**10–30** Ω
#10, #20, #30, #40, #50, #60– +B	:	**13.2 –14.2** Ω

: PARTS LOCATION

CODE	SEE PAGE	CODE	SEE PAGE	CODE	SEE PAGE
A 5	24 (2JZ–GTE)	H 5	24	P 2	25 (2JZ–GTE)
C 1	24	H11	29	S 1	25
C 2	24	I 1	25 (2JZ–GTE)	S 5	25
C 3	24	I 2 B	25	S11	29
C 9	28	I 3 A	25	T 2	25 (2JZ–GTE)
C10 A	28	I12	25 (2JZ–GTE)	T 5	29
C12 B	28	I13	25 (2JZ–GTE)	T 6	29
D 1	24 (2JZ–GTE)	I14	25 (2JZ–GTE)	T14	25
D 5	28	I15	25 (2JZ–GTE)	V 2	25 (2JZ–GTE)
D 8	28	I16	25 (2JZ–GTE)	V 3	25 (2JZ–GTE)
E 1	24 (2JZ–GTE)	I17	25 (2JZ–GTE)	V 4	25
E 3	24 (2JZ–GTE)	I19	29	V 5	25
E 9 B	29	J 2	29	V 6	25 (2JZ–GTE)
E10 A	29	K 1	25 (2JZ–GTE)	V 7	25
F14	30	K 2	25 (2JZ–GTE)	V 8	25
F15	30	M 1	25	V10	25 (2JZ–GTE)

: RELAY BLOCKS

CODE	SEE PAGE	RELAY BLOCKS (RELAY BLOCK LOCATION)
2	22	R/B NO. 2 (ENGINE COMPARTMENT LEFT)

: JUNCTION BLOCK AND WIRE HARNESS CONNECTOR

CODE	SEE PAGE	JUNCTION BLOCK AND WIRE HARNESS (CONNECTOR LOCATION)
1B	20	ENGINE ROOM MAIN WIRE AND J/B NO. 1 (LEFT KICK PANEL)
1E	20	INSTRUMENT PANEL WIRE AND J/B NO. 1 (LEFT KICK PANEL)
1H	20	COWL WIRE AND J/B NO. 1 (LEFT KICK PANEL)
1I		
1J		
1K		
2A	22	BATTERY AND J/B NO. 2 (ENGINE COMPARTMENT LEFT)

: CONNECTOR JOINING WIRE HARNESS AND WIRE HARNESS

CODE	SEE PAGE	JOINING WIRE HARNESS AND WIRE HARNESS (CONNECTOR LOCATION)
EA1	32 (2JZ–GTE)	ENGINE WIRE AND ENGINE ROOM MAIN WIRE (NEAR THE R/B NO. 2)
EA2	32	
IB1	36	ENGINE ROOM MAIN WIRE AND COWL WIRE (LEFT KICK PANEL)
IC1	36	FLOOR NO. 2 WIRE AND COWL WIRE (LEFT KICK PANEL)
IC2		
IF1	36	INSTRUMENT PANEL WIRE AND COWL WIRE (INSTRUMENT PANEL REINFORCEMENT LH)
II1	38	ENGINE WIRE AND INSTRUMENT PANEL WIRE (RIGHT KICK PANEL)
IJ1	38	ENGINE WIRE AND COWL WIRE (RIGHT KICK PANEL)
IJ2		
BP1	40	FUEL GAUGE WIRE AND FLOOR NO. 2 WIRE (LUGGAGE ROOM FRONT LH)

: GROUND POINTS

CODE	SEE PAGE	GROUND POINTS LOCATION
EB	32 (2JZ–GTE)	FRONT SIDE OF LEFT FENDER
ED	32 (2JZ–GTE)	REAR SIDE OF INTAKE MANIFOLD
IF	36	LEFT KICK PANEL
BI	40	LEFT QUARTER PILLAR

: SPLICE POINTS

CODE	SEE PAGE	WIRE HARNESS WITH SPLICE POINTS	CODE	SEE PAGE	WIRE HARNESS WITH SPLICE POINTS
E 7	32	ENGINE ROOM MAIN WIRE	I 5	38	INSTRUMENT PANEL WIRE
E 9			I 8		
E10	32	ENGINE WIRE	I11	38	COWL WIRE
E12			I14	38	INSTRUMENT PANEL WIRE
E13			I16	38	CONSOLE BOX WIRE
E14			I17	38	ENGINE WIRE
E15			I20	38	COWL WIRE
E16			B 6	40	FLOOR NO. 2 WIRE
I 4	38	COWL WIRE			

ENGINE CONTROL (FOR 2JZ–GTE)

A 5 GRAY

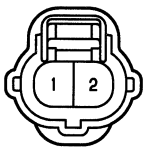

C 1 BLACK



C 2 BLACK



C 3 DARK GRAY



C 9

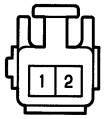

C10 Ⓐ BLUE

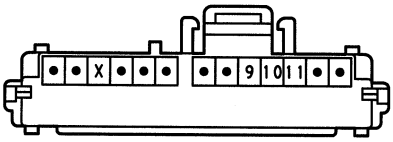

C12 Ⓑ

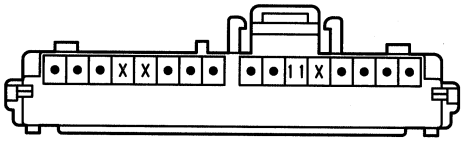

D 1 BLACK

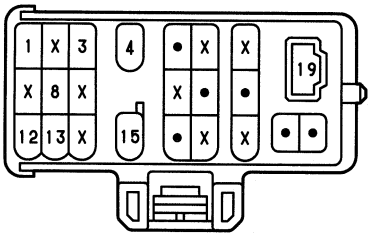

D 5 DARK GRAY

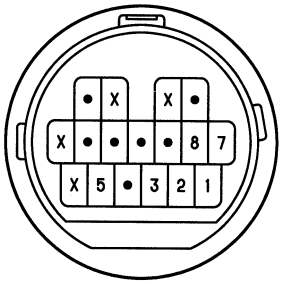

D 8 ORANGE

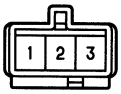

E 1 DARK GRAY



E 3 DARK GRAY



E 9 Ⓑ DARK GRAY

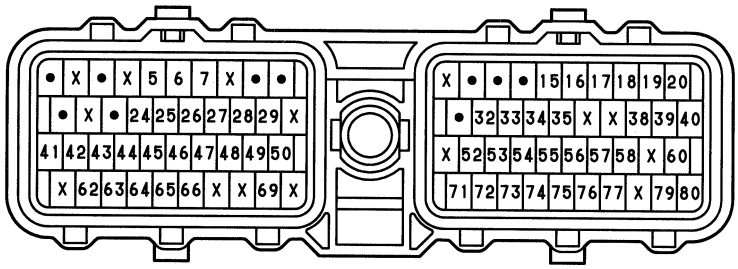

E10 Ⓐ DARK GRAY

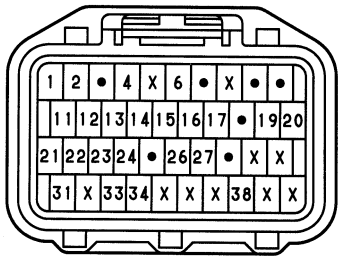

F14 DARK GRAY



F15 BLACK

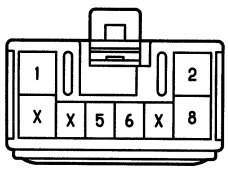

H 5 DARK GRAY

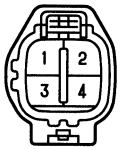

H11 DARK GRAY

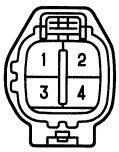

I 1 BLACK



I 2 Ⓑ BLACK



I 3 Ⓐ BLACK

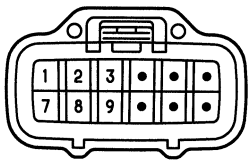

I12, I14, I16 DARK GRAY



I13, I15, I17 BROWN



I19

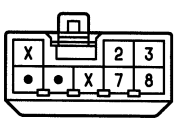

J 2

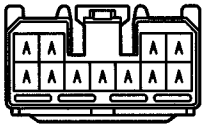

(HINT:SEE PAGE 7)

K 1, K 2 DARK GRAY



M 1 BLACK

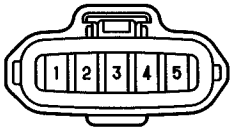

P 2 GRAY

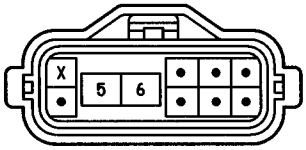

S 1 DARK GRAY

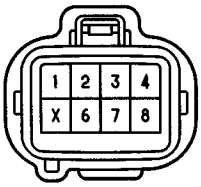

S 5 BLACK



S11 BLUE

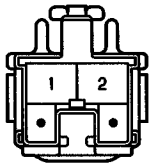

T 2 BLACK



T 5

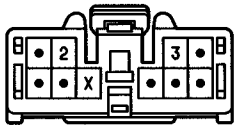

T 6

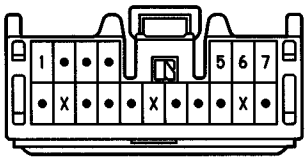

T14 BLACK



V 2 BLACK



V 3 BROWN



V 4 BLUE



V 5 BLACK



V 6 BLUE



V 7 BLACK



V 8 BLUE



V10 BLACK



ENGINE CONTROL (FOR 2JZ–GE)

SYSTEM OUTLINE

THE ENGINE CONTROL SYSTEM UTILIZES A MICROCOMPUTER AND MAINTAINS OVERALL CONTROL OF THE ENGINE, TRANSMISSION ETC. AN OUTLINE OF THE ENGINE CONTROL IS GIVEN HERE.

1. INPUT SIGNALS

(1) ENGINE COOLANT TEMP. (WATER TEMP.) SIGNAL CIRCUIT

THE ENGINE COOLANT TEMP. SENSOR (EFI WATER TEMP. SENSOR) DETECTS THE ENGINE COOLANT TEMP. (WATER TEMP.) AND HAS A BUILT–IN THERMISTOR WITH A RESISTANCE, WHICH VARIES ACCORDING TO THE ENGINE COOLANT TEMP. (WATER TEMP.) WHICH IS INPUT INTO **TERMINAL THW** OF THE ENGINE CONTROL MODULE (ENGINE AND ELECTRONICALLY CONTROLLED TRANSMISSION ECU) AS A CONTROL SIGNAL.

(2) INTAKE AIR TEMP. SIGNAL CIRCUIT

THE INTAKE AIR TEMP. SENSOR IS INSTALLED IN THE VOLUME AIR FLOW (AIR FLOW METER) AND DETECTS THE INTAKE AIR TEMP. WHICH IS INPUT AS A CONTROL SIGNAL TO **TERMINAL THA** OF THE ENGINE CONTROL MODULE (ENGINE AND ELECTRONICALLY CONTROLLED TRANSMISSION ECU).

(3) OXYGEN DENSITY SIGNAL CIRCUIT

(EXCEPT CALIFORNIA)

THE OXYGEN DENSITY IN THE EXHAUST EMISSION IS DETECTED BY THE OXYGEN SENSOR FRONT AND REAR SIDE AND INPUT AS A CONTROL SIGNAL TO **TERMINALS OX1, OX2** OF THE ENGINE CONTROL MODULE (ENGINE AND ELECTRONICALLY CONTROLLED TRANSMISSION ECU).

(FOR CALIFORNIA)

THE OXYGEN DENSITY IN THE EXHAUST EMISSION IS DETECTED BY THE HEATED OXYGEN SENSOR FRONT AND REAR SIDE AND INPUT AS A CONTROL SIGNAL TO **TERMINALS OX1, OX2, OX3** OF THE ENGINE CONTROL MODULE (ENGINE AND ELECTRONICALLY CONTROLLED TRANSMISSION ECU).

(4) RPM SIGNAL CIRCUIT

CRANKSHAFT POSITION IS DETECTED BY THE PICK–UP COIL INSTALLED INSIDE THE DISTRIBUTOR. CRANKSHAFT POSITION IS INPUT AS A CONTROL SIGNAL TO **TERMINALS G1** AND **G2** OF THE ENGINE CONTROL MODULE (ENGINE AND ELECTRONICALLY CONTROLLED TRANSMISSION ECU), AND ENGINE SPEED IS INPUT TO **TERMINAL NE**.

(5) THROTTLE POSITION SIGNAL CIRCUIT

THE THROTTLE POSITION SENSOR DETECTS THE THROTTLE VALVE OPENING ANGLE AS A CONTROL SIGNAL, WHICH IS INPUT INTO **TERMINAL VTA1** OF THE ENGINE CONTROL MODULE (ENGINE AND ELECTRONICALLY CONTROLLED TRANSMISSION ECU). WHEN THE VALVE IS COMPLETELY CLOSED, THE CONTROL SIGNAL IS INPUT INTO **TERMINAL IDL1**.

(6) VEHICLE SPEED CIRCUIT

THE VEHICLE SPEED IS DETECTED BY VEHICLE SPEED SENSOR (SPEED SENSOR) NO.1 INSTALLED IN THE TRANSMISSION AND THE SIGNAL IS INPUT TO **TERMINAL SP1** OF THE ENGINE CONTROL MODULE (ENGINE AND ELECTRONICALLY CONTROLLED TRANSMISSION ECU) VIA THE COMBINATION METER.

(7) NEUTRAL POSITION SIGNAL CIRCUIT

THE PARK/NEUTRAL POSITION SW (NEUTRAL START SW) DETECTS WHETHER THE SHIFT POSITION IS IN “N” OR “P” OR NOT, AND THE SIGNAL IS INPUT INTO **TERMINAL NSW** OF THE ENGINE CONTROL MODULE (ENGINE AND ELECTRONICALLY CONTROLLED TRANSMISSION ECU).

(8) A/C SW SIGNAL CIRCUIT

THE OPERATING VOLTAGE OF THE A/C MAGNETIC CLUTCH IS DETECTED AND THE SIGNAL IS INPUT INTO **TERMINAL ACMG** OF ENGINE CONTROL MODULE (ENGINE AND ELECTRONICALLY CONTROLLED TRANSMISSION ECU) AS A CONTROL SIGNAL.

(9) BATTERY SIGNAL CIRCUIT

VOLTAGE IS CONSTANTLY APPLIED TO **TERMINAL BATT** OF THE ENGINE CONTROL MODULE (ENGINE AND ELECTRONICALLY CONTROLLED TRANSMISSION ECU). WITH THE IGNITION SW TURNED ON, THE VOLTAGE FOR ENGINE CONTROL MODULE (ENGINE AND ELECTRONICALLY CONTROLLED TRANSMISSION ECU) START–UP POWER SUPPLY IS APPLIED TO **TERMINALS +B** OF THE ENGINE CONTROL MODULE (ENGINE AND ELECTRONICALLY CONTROLLED TRANSMISSION ECU) VIA EFI MAIN RELAY.

THE CURRENT FLOWING THROUGH THE **IGN** FUSE FLOWS TO **TERMINAL IGSW** OF THE ENGINE CONTROL MODULE (ENGINE AND ELECTRONICALLY CONTROLLED TRANSMISSION ECU).

(10) INTAKE AIR VOLUME SIGNAL CIRCUIT

INTAKE AIR VOLUME IS DETECTED BY THE VOLUME AIR FLOW (AIR FLOW METER) AND THE SIGNAL IS INPUT TO **TERMINAL KS** OF THE ENGINE CONTROL MODULE (ENGINE AND ELECTRONICALLY CONTROLLED TRANSMISSION ECU) AS A CONTROL SIGNAL.

(11) STOP LIGHT SW SIGNAL CIRCUIT

THE STOP LIGHT SW IS USED TO DETECT WHETHER THE VEHICLE IS BRAKING OR NOT AND THE SIGNAL IS INPUT INTO **TERMINAL STP** OF THE ENGINE CONTROL MODULE (ENGINE AND ELECTRONICALLY CONTROLLED TRANSMISSION ECU) AS A CONTROL SIGNAL.

(12) STARTER SIGNAL CIRCUIT

TO CONFIRM WHETHER THE ENGINE IS CRANKING, THE VOLTAGE IS APPLIED TO THE STARTER MOTOR DURING CRANKING IS DETECTED AND THE SIGNAL IS INPUT INTO **TERMINAL STA** OF THE ENGINE CONTROL MODULE (ENGINE AND ELECTRONICALLY CONTROLLED TRANSMISSION ECU) AS A CONTROL SIGNAL.

(13) ENGINE KNOCK SIGNAL CIRCUIT

ENGINE KNOCKING IS DETECTED BY KNOCK SENSOR FRONT AND REAR SIDE AND THE SIGNAL IS INPUT INTO **TERMINALS KNK1** AND **KNK2** AS A CONTROL SIGNAL.

2. CONTROL SYSTEM

***** SEQUENTIAL MULTIPORT FUEL INJECTION (ELECTRONIC FUEL INJECTION) SYSTEM

THE SEQUENTIAL MULTIPORT FUEL INJECTION (ELECTRONIC FUEL INJECTION) SYSTEM MONITORS THE ENGINE CONDITION THROUGH THE SIGNALS INPUT FROM EACH SENSOR (INPUT SIGNALS FROM (1) TO (13) ETC.) TO THE ENGINE CONTROL MODULE (ENGINE AND ELECTRONICALLY CONTROLLED TRANSMISSION ECU). THE BEST FUEL INJECTION TIMING IS DECIDED BASED ON THIS DATA AND THE PROGRAM MEMORIZED BY THE ENGINE CONTROL MODULE (ENGINE AND ELECTRONICALLY CONTROLLED TRANSMISSION ECU), AND THE CONTROL SIGNAL IS OUTPUT TO **TERMINALS #10, #20, #30, 40, #50** AND **#60** OF THE ENGINE CONTROL MODULE (ENGINE AND ELECTRONICALLY CONTROLLED TRANSMISSION ECU) TO OPERATE THE INJECTOR (INJECT THE FUEL). THE SEQUENTIAL MULTIPORT FUEL INJECTION (ELECTRONIC FUEL INJECTION) SYSTEM PRODUCES CONTROLS OF FUEL INJECTION OPERATION BY THE ENGINE CONTROL MODULE (ENGINE AND ELECTRONICALLY CONTROLLED TRANSMISSION ECU) IN RESPONSE TO THE DRIVING CONDITIONS.

***** ESA (ELECTRONIC SPARK ADVANCE) SYSTEM

THE ESA SYSTEM MONITORS THE ENGINE CONDITION THROUGH THE SIGNALS INPUT TO THE ENGINE CONTROL MODULE (ENGINE AND ELECTRONICALLY CONTROLLED TRANSMISSION ECU) FROM EACH SENSOR (INPUT SIGNALS FROM (1), (2), (4) TO (13) ETC.). THE BEST IGNITION TIMING IS DECIDED ACCORDING TO THIS DATA AND THE MEMORIZED DATA IN THE ENGINE CONTROL MODULE (ENGINE AND ELECTRONICALLY CONTROLLED TRANSMISSION ECU) AND THE CONTROL SIGNAL IS OUTPUT TO **TERMINAL IGT**. THIS SIGNAL CONTROLS THE IGNITER TO PROVIDE THE BEST IGNITION TIMING FOR THE DRIVING CONDITIONS.

***** HEATED OXYGEN SENSOR HEATER CONTROL SYSTEM (FOR CALIFORNIA)

THE MAIN HEATED OXYGEN SENSOR FRONT AND REAR SIDE, SUB HEATED OXYGEN SENSOR HEATER CONTROL SYSTEM TURNS THE HEATER ON WHEN THE INTAKE AIR VOLUME IS LOW (TEMP. OF EXHAUST EMISSIONS IS LOW), AND WARMS UP THE OXYGEN SENSOR TO IMPROVE DETECTION PERFORMANCE OF THE SENSOR. THE ENGINE CONTROL MODULE (ENGINE AND ELECTRONICALLY CONTROLLED TRANSMISSION ECU) EVALUATES THE SIGNALS FROM EACH SENSOR (INPUT SIGNALS FROM (1), (2), (4), (9) TO (11) ETC.), AND OUTPUTS CURRENT TO **TERMINALS HT1**, **HT2, HT3** TO CONTROL THE HEATER.

***** IDLE AIR CONTROL (IDLE SPEED CONTROL) SYSTEM

THE IDLE AIR CONTROL (ISC) SYSTEM (STEP MOTOR TYPE) INCREASES THE ENGINE SPEED AND PROVIDES IDLING STABILITY FOR FAST IDLE–UP WHEN THE ENGINE IS COLD, AND WHEN THE IDLE SPEED HAS DROPPED DUE TO ELECTRICAL LOAD AND SO ON. THE ENGINE CONTROL MODULE (ENGINE AND ELECTRONICALLY CONTROLLED TRANSMISSION ECU) EVALUATES THE SIGNALS FROM EACH SENSOR (INPUT SIGNALS FROM (1), (4), (5), (8), (9), (11) ETC.), OUTPUTS CURRENT TO **TERMINALS ISC1, ISC2, ISC3** AND **ISC4** TO CONTROL THE IDLE AIR CONTROL VALVE (ISC VALVE).

***** EGR CONTROL SYSTEM

THE EGR CONTROL SYSTEM DETECTS THE SIGNAL FROM EACH SENSOR (INPUT SIGNALS FROM (1), (4), (9), (10) ETC.), AND OUTPUTS CURRENT TO **TERMINAL EGR** TO CONTROL THE EGR VALVE.

***** FUEL PUMP CONTROL SYSTEM

THE ENGINE CONTROL MODULE (ENGINE AND ELECTRONICALLY CONTROLLED TRANSMISSION ECU) OUTPUTS CURRENT TO **TERMINAL FPC** AND CONTROLS THE FUEL PUMP ECU AND FUEL PUMP DRIVE SPEED IN RESPONSE TO THE DRIVING CONDITIONS.

***** ACIS (ACOUSTIC CONTROL INDUCTION SYSTEM)

ACIS INCLUDES A VALVE IN THE BULKHEAD SEPARATING THE SURGE TANK INTO TWO PARTS. THIS VALVE IS OPENED AND CLOSED IN ACCORDANCE WITH THE DRIVING CONDITIONS TO CONTROL THE INTAKE MANIFOLD LENGTH IN TWO STAGES FOR INCREASED ENGINE OUTPUT IN ALL RANGES FROM LOW TO HIGH SPEEDS.

THE ENGINE CONTROL MODULE (ENGINE AND ELECTRONICALLY CONTROLLED TRANSMISSION ECU) JUDGES THE VEHICLE SPEED BY THE SIGNALS ((4), (5)) FROM EACH SENSOR AND OUTPUTS SIGNALS TO THE **TERMINAL ACIS** TO CONTROL THE VSV (FOR INTAKE CONTROL VALVE).

3. DIAGNOSIS SYSTEM

WITH THE DIAGNOSIS SYSTEM, WHEN THERE IS A MALFUNCTION IN THE ENGINE CONTROL MODULE (ENGINE AND ELECTRONICALLY CONTROLLED TRANSMISSION ECU) SIGNAL SYSTEM, THE MALFUNCTIONING SYSTEM IS RECORDED IN THE MEMORY. THE MALFUNCTIONING SYSTEM CAN BE FOUND BY READING THE CODE DISPLAYED BY THE MALFUNCTION INDICATOR LAMP (CHECK ENGINE WARNING LIGHT).

4. FAIL–SAFE SYSTEM

WHEN A MALFUNCTION HAS OCCURRED IN ANY SYSTEM, IF THERE IS A POSSIBILITY OF ENGINE TROUBLE BEING CAUSED BY CONTINUED CONTROL BASED ON THE SIGNALS FROM THAT SYSTEM, THE FAIL–SAFE SYSTEM EITHER CONTROLS THE SYSTEM BY USING DATA (STANDARD VALUES) RECORDED IN THE ENGINE CONTROL MODULE (ENGINE AND ELECTRONICALLY CONTROLLED TRANSMISSION ECU) MEMORY OR ELSE STOPS THE ENGINE.

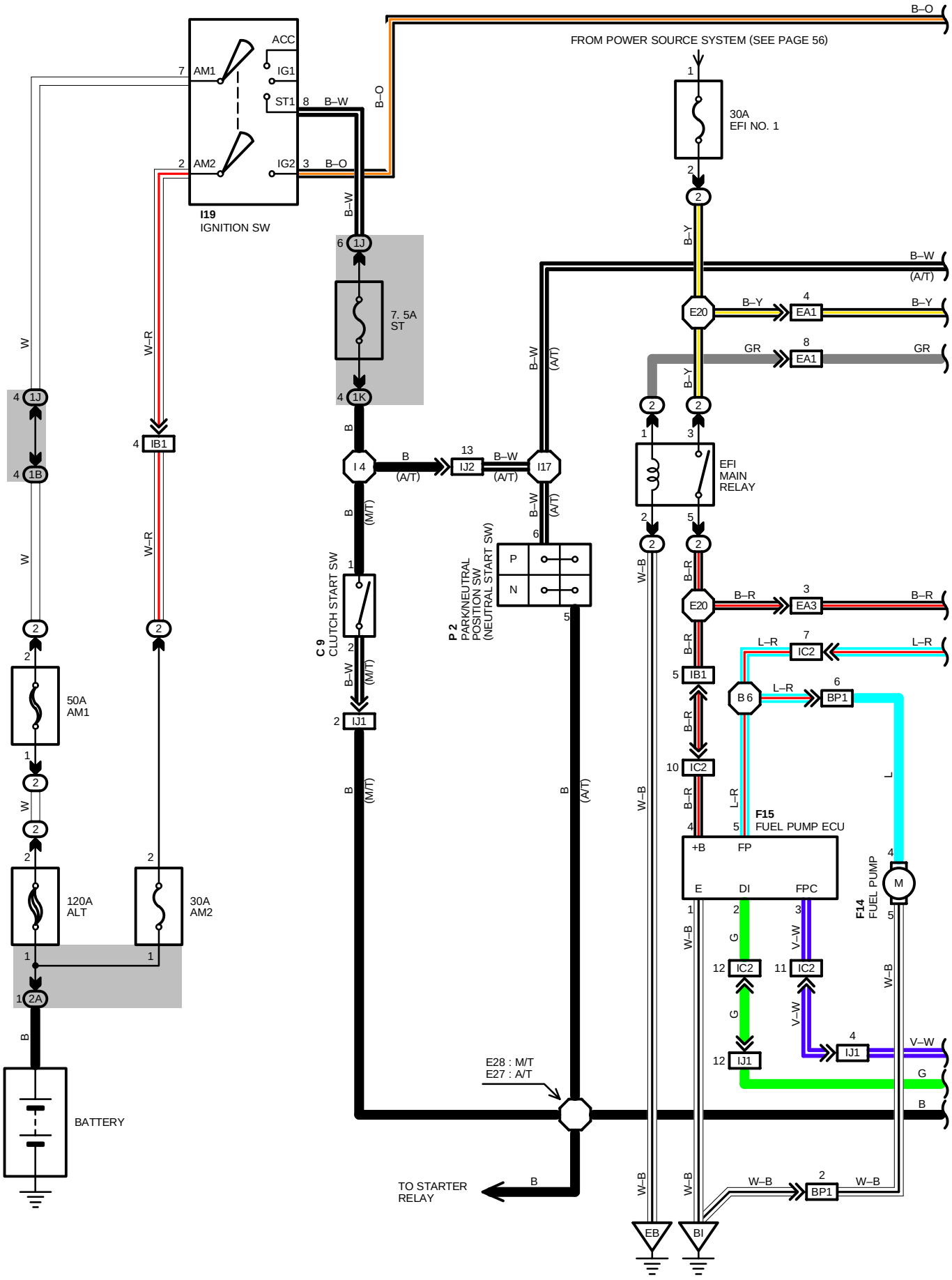
FROM POWER SOURCE SYSTEM (SEE PAGE 56)
B–O
30A
EFI NO. 1
I19
IGNITION SW
ACC
IG1
ST1
IG2
AM1
AM2
B–W
B–O
7, 5A
ST
EFI
MAIN
RELAY
B–Y
B–W
(A/T)
GR
EA1
EA3
E20
I 4
IJ2
I17
IB1
IC2
IJ1
BP1
B 6
C 9
CLUTCH START SW
P 2
PARK/NEUTRAL
POSITION SW
(NEUTRAL START SW)
P
N
(M/T)
(A/T)
F15
FUEL PUMP ECU
+B
FP
E
DI
FPC
F14
FUEL PUMP
M
50A
AM1
120A
ALT
30A
AM2
BATTERY
E28 : M/T
E27 : A/T
TO STARTER
RELAY
EB
BI
W
W–R
B
L
L–R
G
V–W
W–B
B–R

*1 : CALIFORNIA
*2 : EXCEPT CALIFORNIA
*3 : ENGINE AND ELECTRONICALLY CONTROLLED TRANSMISSION ECU

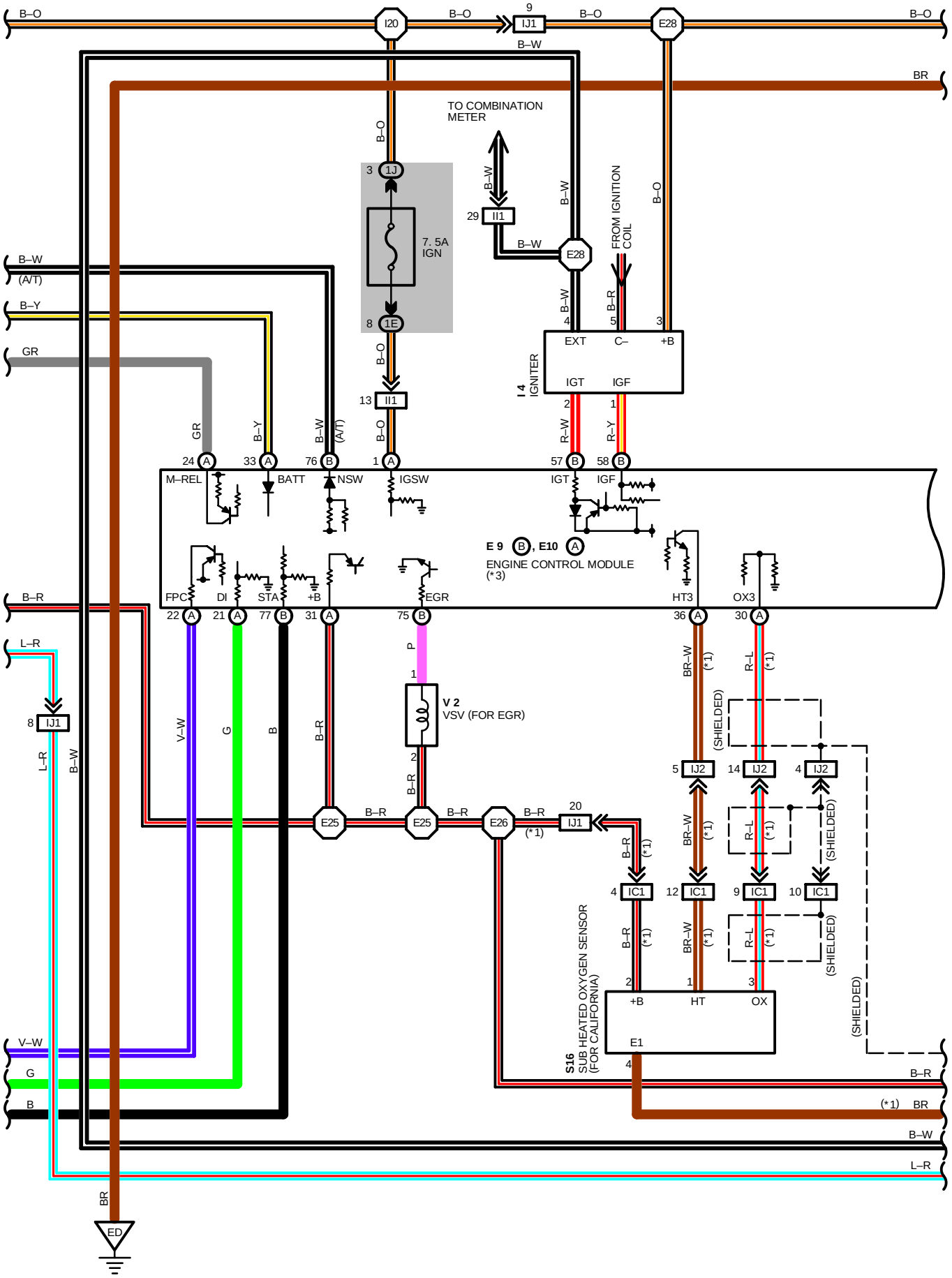

ENGINE CONTROL (FOR 2JZ–GE)

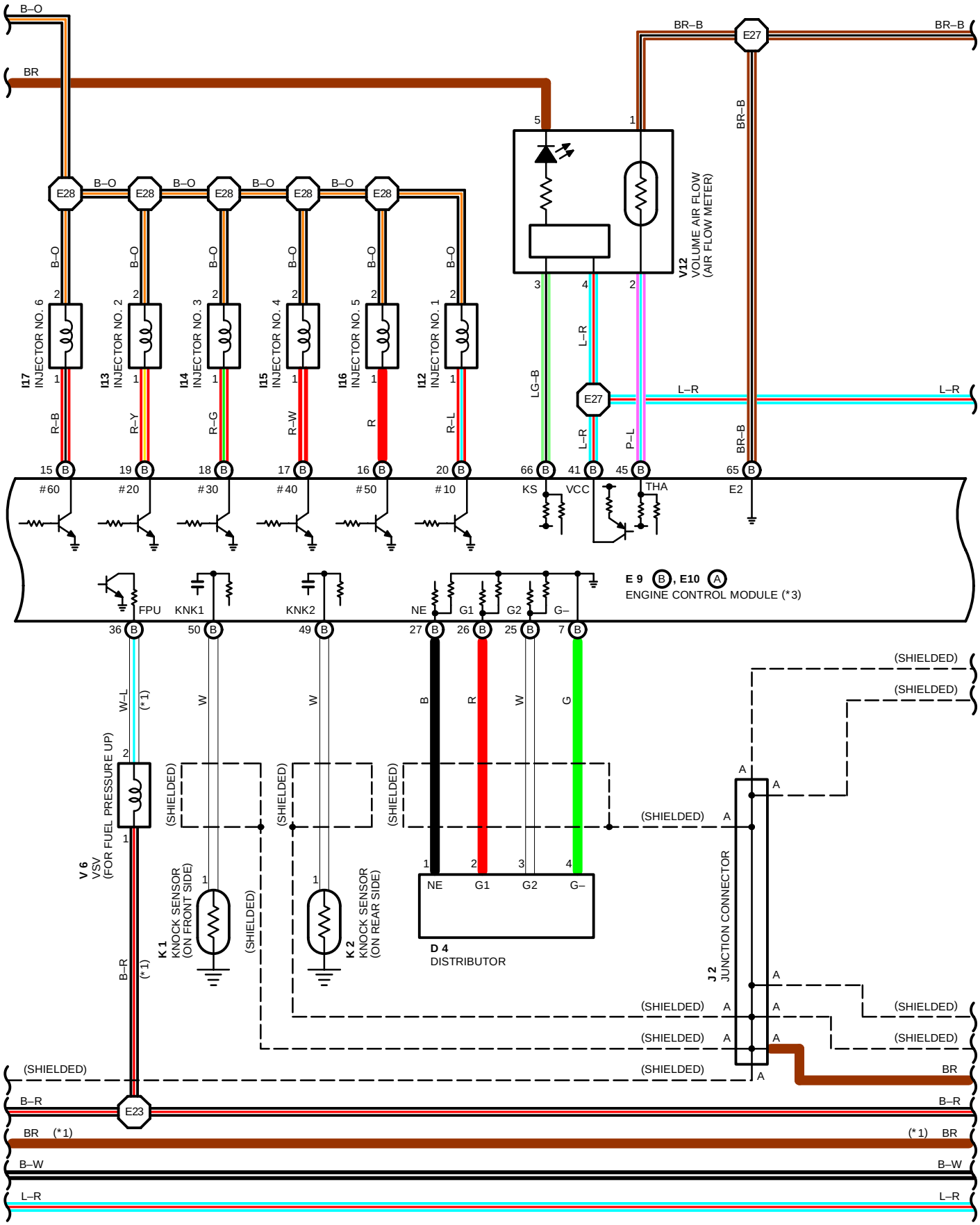

*1 : CALIFORNIA
*2 : EXCEPT CALIFORNIA
*3 : ENGINE AND ELECTRONICALLY CONTROLLED TRANSMISSION ECU

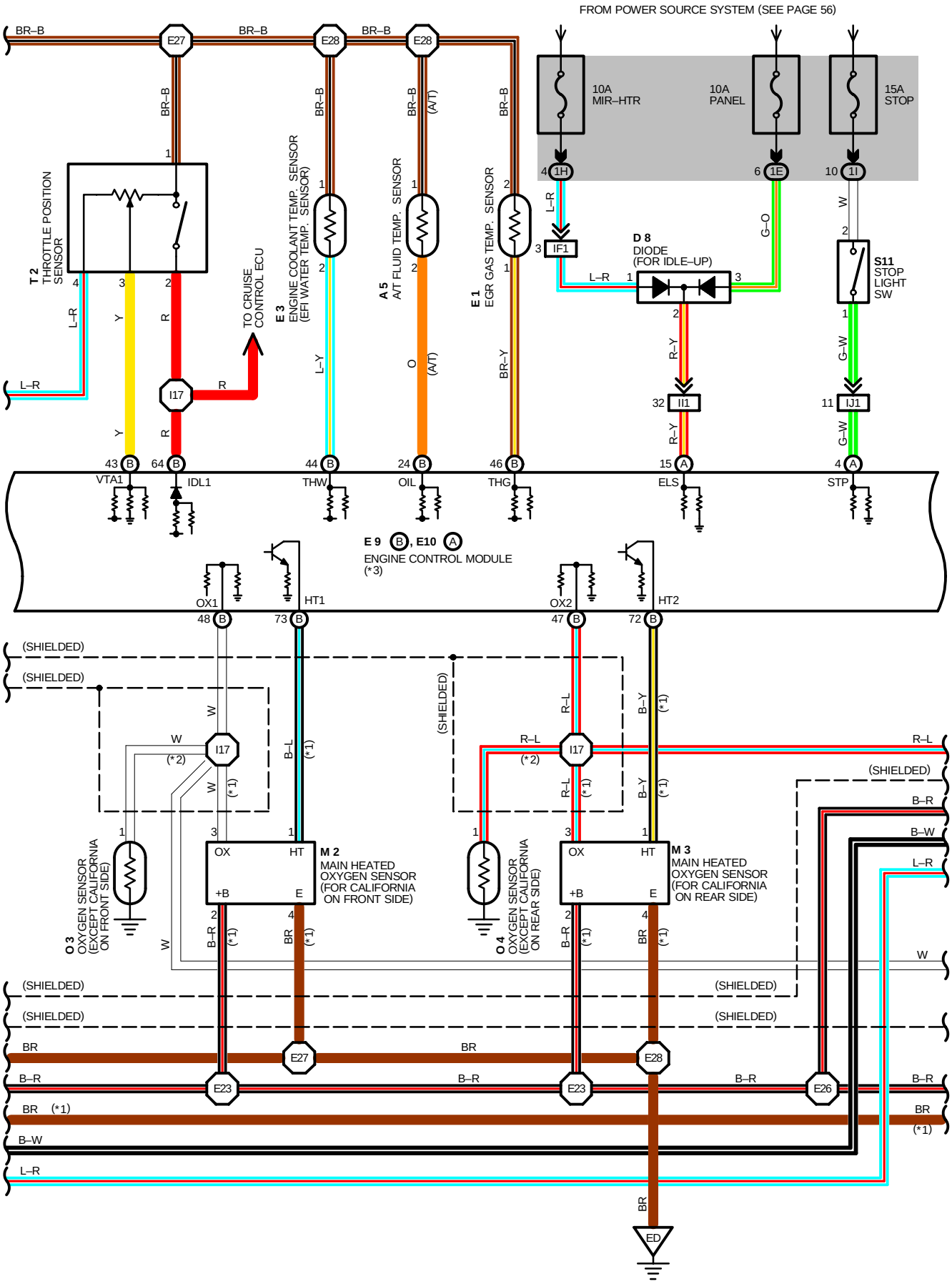

ENGINE CONTROL (FOR 2JZ–GE)

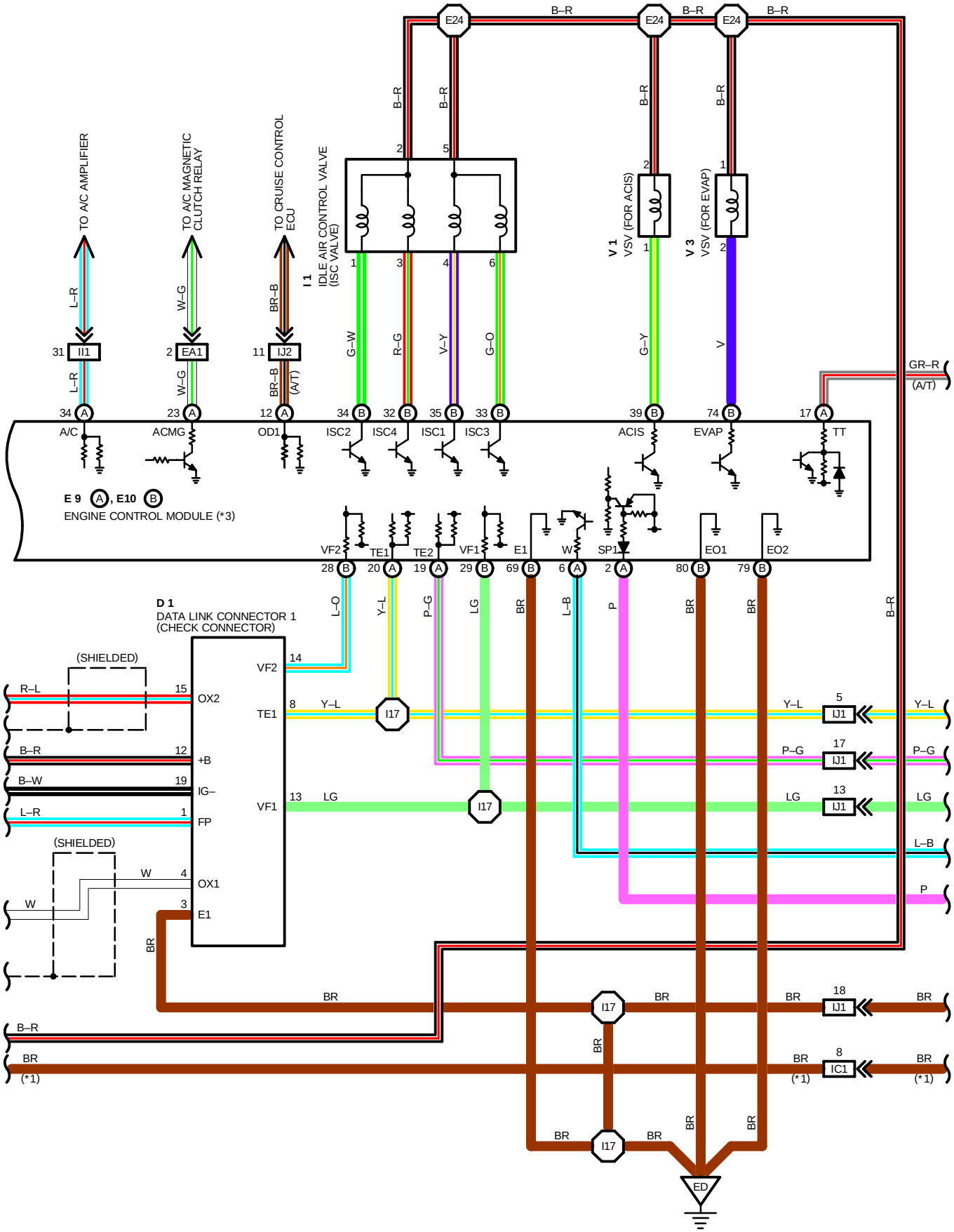

*1 : CALIFORNIA
*2 : EXCEPT CALIFORNIA
*3 : ENGINE AND ELECTRONICALLY CONTROLLED TRANSMISSION ECU

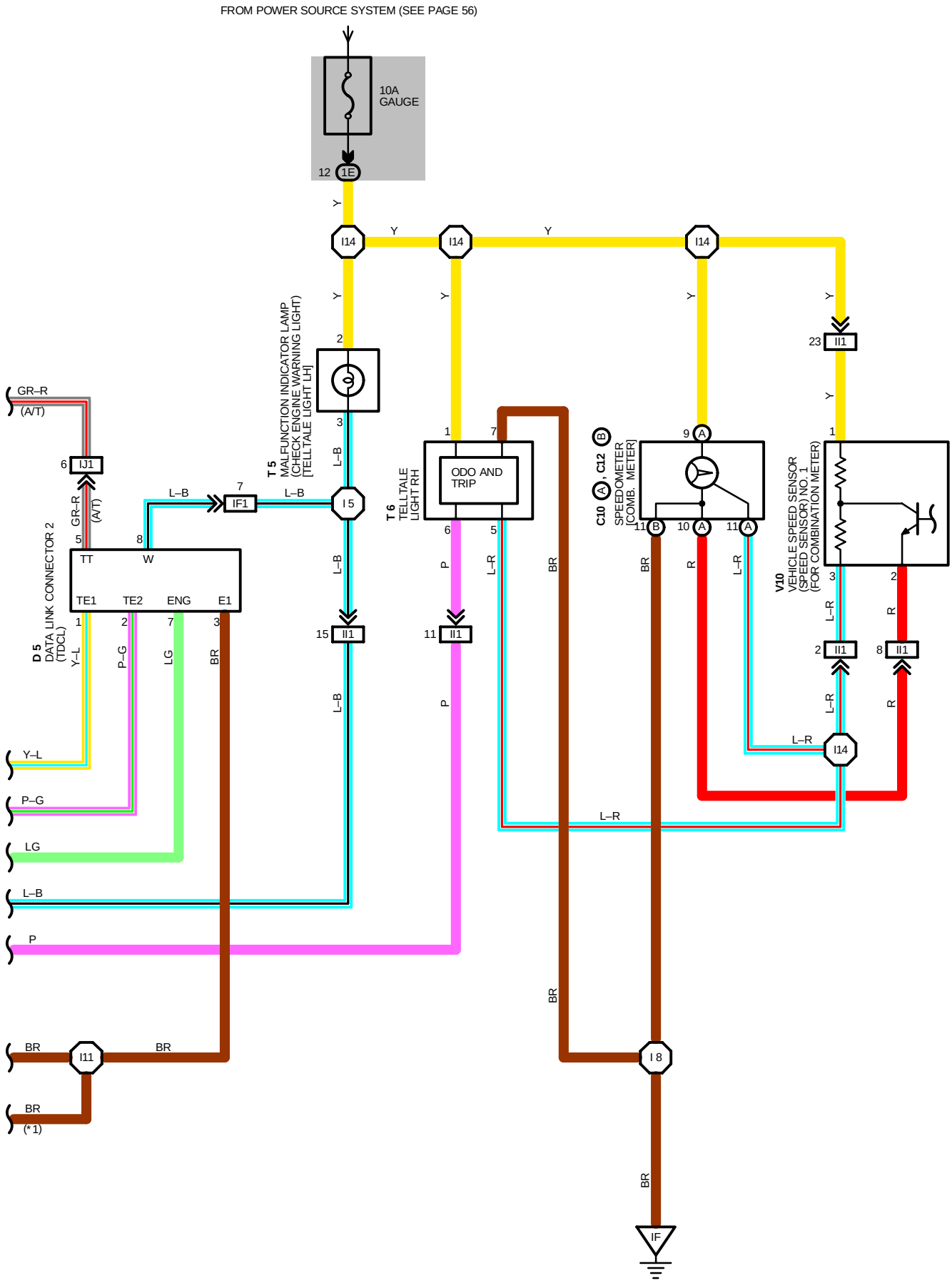

ENGINE CONTROL (FOR 2JZ–GE)

SERVICE HINTS

EFI MAIN RELAY

(2) 3– **(2)** 5 : CLOSED WITH IGNITION SW AT **ON** POSITION

E 3 ENGINE COOLANT TEMP. SENSOR (EFI WATER TEMP. SENSOR)

1– 2: **10–20** KΩ (**–20**˚C, **–4**˚F)
4– 7 KΩ (**0**˚C, **32**˚F)
2– 3 KΩ (**20**˚C, **68**˚F)
0.9–1.3 KΩ (**40**˚C, **104**˚F)
0.4–0.7 KΩ (**60**˚C, **140**˚F)
0.2–0.4 KΩ (**80**˚C, **176**˚F)

I 1 IDLE AIR CONTROL VALVE (ISC VALVE)

1, 3– 2: APPROX. **10–30** Ω
4, 6– 5: APPROX. **10–30** Ω

I12, I13, I14, I15, I16, I17 INJECTOR

1– 2: APPROX. **13–8** Ω

T 2 THROTTLE POSITION SENSOR

1– 4: APPROX. **4–9** KΩ
1– 3: **3.3– 10.0** KΩ WITH THROTTLE VALVE FULLY **OPENED** POSITION
0.2– 0.8 KΩ WITH CLEARANCE BETWEEN LEVER AND STOP SCREW **0** MM (**0** IN.)
1– 2: **0–2.3** KΩ WITH CLEARANCE BETWEEN LEVER AND STOP SCREW **0.45** MM (**0.0177** IN.)
INFINITY WITH CLEARANCE BETWEEN LEVER AND STOP SCREW **0.55** MM (**0.0216** IN.)

E 9(B), E10(A) ENGINE CONTROL MODULE (ENGINE AND ELECTRONICALLY CONTROLLED TRANSMISSION ECU)

(VOLTAGE AT ENGINE CONTROL MODULE (ENGINE AND ELECTRONICALLY CONTROLLED TRANSMISSION ECU) WIRING CONNECTORS)

BATT–E1	:	ALWAYS **9**–**14** VOLTS
IGSW–E1	:	**9–14** VOLTS WITH IGNITION SW ON
M–REL–E1	:	**9–14** VOLTS WITH IGNITION SW ON
+B–E1	:	**9–14** VOLTS WITH IGNITION SW ON
IDL1–E2	:	**9–14** VOLTS WITH IGNITION SW ON AND THROTTLE VALVE FULLY OPEN
	:	**0 –1.5** VOLTS WITH IGNITION SW ON AND THROTTLE VALVE FULLY CLOSED
VTA1–E2	:	**0.3– 0.8** VOLTS WITH IGNITION SW ON AND THROTTLE VALVE FULLY CLOSED
	:	**3.2–4.9** VOLTS WITH IGNITION SW ON AND THROTTLE VALVE OPEN
#10, #20, #30–E01, E02	:	PULSE GENERATION (ENGINE IDLING)
#40, #50, #60–E01, E02	:	PULSE GENERATION (ENGINE IDLING)
THA–E2	:	**0.5–3.4** VOLTS WITH IGNITION SW ON AND INTAKE AIR TEMP. **20**˚C **(68**˚F)
THW–E2	:	**0.2–1.0** VOLTS WITH IGNITION SW ON AND COOLANT TEMP. **80**˚C **(176**˚F)
STA–E1	:	**6–14** VOLTS WITH ENGINE CRANKING
ISC1, ISC2, ISC3, ISC4–E1	:	PULSE GENERATION (ENGINE IDLING)
W–E1	:	**9–14** VOLTS WITH ENGINE IDLING
IGF–E1	:	PULSE GENERATION (ENGINE IDLING)
NSW–E1	:	**0.3** VOLTS WITH IGNITION SW ON AND SHIFT LEVER **P** OR **N** POSITION
		9–14 VOLTS WITH IGNITION SW ON AND SHIFT LEVER EXCEPT **P** OR **N** POSITION
SP1	:	PULSE GENERATION
TE1, TE2–E1	:	**9–14** VOLTS WITH IGNITION SW ON
A/C–E1	:	**0–1.5** VOLTS WITH IGNITION SW ON AND A/C OFF
		7.5–14 VOLTS WITH IGNITION SW ON AND A/C ON
ELS–E1	:	**9–14** VOLTS WITH TAILLIGHT ON, DEFOGGER ON
		0–1.5 VOLTS WITH TAILLIGHT OFF, DEFOGGER OFF
STP–E1	:	**7.5–14** VOLTS WITH STOP LIGHT SW ON (BRAKE PEDAL DEPRESSED)
		0–1.5 VOLTS WITH STOP LIGHT SW OFF

(RESISTANCE OF ENGINE CONTROL MODULE (ENGINE AND ELECTRONICALLY CONTROLLED TRANSMISSION ECU) CONNECTORS)

IDL1–E2	:	INFINITY WITH THROTTLE VALVE OPEN
	:	**0–2.3** KΩ WITH THROTTLE VALVE FULLY CLOSED
VTA1–E2	:	**3.3** KΩ – **10.0** KΩ WITH THROTTLE VALVE FULLY OPEN
	:	**200** Ω **–800** Ω WITH THROTTLE VALVE FULLY CLOSED
VCC–E2	:	**4** KΩ **–9** KΩ
THA–E2	:	**2** KΩ **–3** KΩ WITH INTAKE AIR TEMP. **20**˚C (**68**˚F)
THW–E2	:	**200** Ω**–400** Ω WITH COOLANT TEMP. **80**˚C (**176**˚F)
ISC1, ISC2, ISC3, ISC4– +B	:	**10–30** Ω
#10, #20, #30, #40, #50, #60– +B	:	**13.2 –14.2** Ω
ACIS– +B	:	**38.5 –44.5** Ω

: PARTS LOCATION

CODE	SEE PAGE	CODE	SEE PAGE	CODE	SEE PAGE
A 5	26 (2JZ–GE)	I 1	27 (2JZ–GE)	O 3	27
C 9	28	I 4	27	O 4	27
C10 A	28	I12	27 (2JZ–GE)	P 2	27 (2JZ–GE)
C12 B	28	I13	27 (2JZ–GE)	S11	29
D 1	26 (2JZ–GE)	I14	27 (2JZ–GE)	S16	29
D 4	26	I15	27 (2JZ–GE)	T 2	27 (2JZ–GE)
D 5	28	I16	27 (2JZ–GE)	T 5	29
D 8	28	I17	27 (2JZ–GE)	T 6	29
E 1	26 (2JZ–GE)	I19	29	V 1	27
E 3	26 (2JZ–GE)	J 2	29	V 2	27 (2JZ–GE)
E 9 B	29	K 1	27 (2JZ–GE)	V 3	27 (2JZ–GE)
E10 A	29	K 2	27 (2JZ–GE)	V 6	27 (2JZ–GE)
F14	30	M 2	27	V10	27 (2JZ–GE)
F15	30	M 3	27	V12	27

: RELAY BLOCKS

CODE	SEE PAGE	RELAY BLOCKS (RELAY BLOCK LOCATION)
2	22	R/B NO. 2 (ENGINE COMPARTMENT LEFT)

: JUNCTION BLOCK AND WIRE HARNESS CONNECTOR

CODE	SEE PAGE	JUNCTION BLOCK AND WIRE HARNESS (CONNECTOR LOCATION)
1B	20	ENGINE ROOM MAIN WIRE AND J/B NO. 1 (LEFT KICK PANEL)
1E	20	INSTRUMENT PANEL WIRE AND J/B NO. 1 (LEFT KICK PANEL)
1H	20	COWL WIRE AND J/B NO. 1 (LEFT KICK PANEL)
1I		
1J		
1K		
2A	22	BATTERY AND J/B NO. 2 (ENGINE COMPARTMENT LEFT)

: CONNECTOR JOINING WIRE HARNESS AND WIRE HARNESS

CODE	SEE PAGE	JOINING WIRE HARNESS AND WIRE HARNESS (CONNECTOR LOCATION)
EA1	34 (2JZ–GE)	ENGINE WIRE AND ENGINE ROOM MAIN WIRE (NEAR THE R/B NO. 2)
EA3	34	
IB1	36	ENGINE ROOM MAIN WIRE AND COWL WIRE (LEFT KICK PANEL)
IC1	36	FLOOR NO. 2 WIRE AND COWL WIRE (LEFT KICK PANEL)
IC2		
IF1	36	INSTRUMENT PANEL WIRE AND COWL WIRE (INSTRUMENT PANEL REINFORCEMENT LH)
II1	38	ENGINE WIRE AND INSTRUMENT PANEL WIRE (RIGHT KICK PANEL)
IJ1	38	ENGINE WIRE AND COWL WIRE (RIGHT KICK PANEL)
IJ2		
BP1	40	FUEL GAUGE WIRE AND FLOOR NO. 2 WIRE (LUGGAGE ROOM FRONT LH)

: GROUND POINTS

CODE	SEE PAGE	GROUND POINTS LOCATION
EB	34 (2JZ–GE)	FRONT SIDE OF LEFT FENDER
ED	34 (2JZ–GE)	REAR SIDE OF INTAKE MANIFOLD
IF	36	LEFT KICK PANEL
BI	40	LEFT QUARTER PILLAR

: SPLICE POINTS

CODE	SEE PAGE	WIRE HARNESS WITH SPLICE POINTS	CODE	SEE PAGE	WIRE HARNESS WITH SPLICE POINTS
E20	34	ENGINE ROOM MAIN WIRE	I 5	38	INSTRUMENT PANEL WIRE
E23	34	ENGINE WIRE	I 8		
E24			I11	38	COWL WIRE
E25			I14	38	INSTRUMENT PANEL WIRE
E26			I17	38	ENGINE WIRE
E27			I20	38	COWL WIRE
E28			B 6	40	FLOOR NO. 2 WIRE
I 4	38	COWL WIRE			

A 5 GRAY

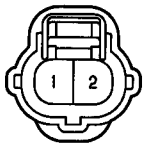

C 9

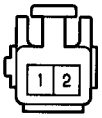

C10 (A) BLUE

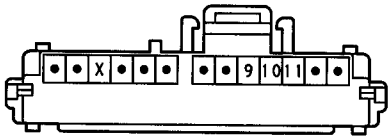

C12 (B)

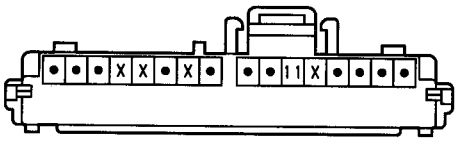

D 1 BLACK

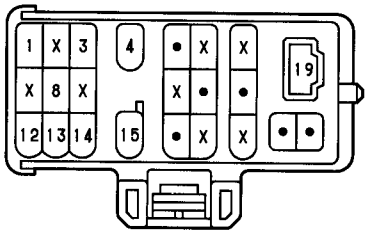

D 4 BLACK



(M/T) D 5 DARK GRAY

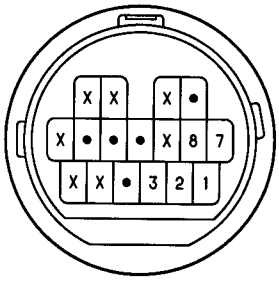

(A/T) D 5 DARK GRAY

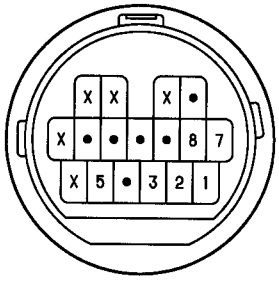

D 6 ORANGE

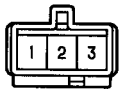

E 1 DARK GRAY



E 3 GREEN



E 9 (B) DARK GRAY

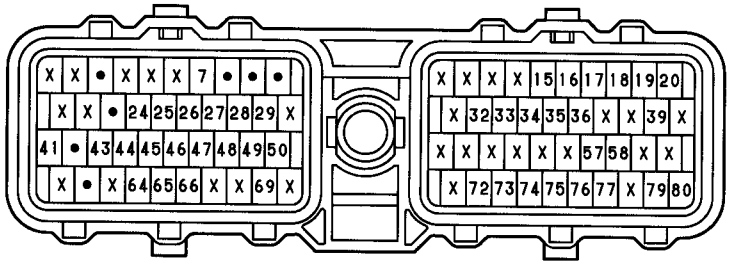

E10 (A) DARK GRAY

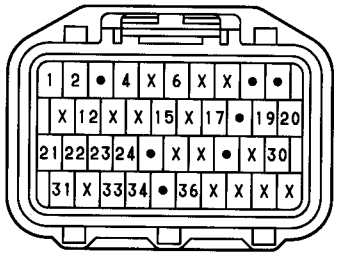

F14 DARK GRAY

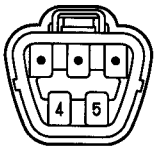

F15 BLACK

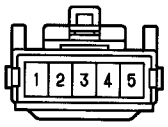

I 1 BLACK



I 4 BLACK

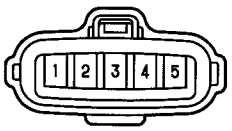

I12, I14, I16 DARK GRAY



I13, I15, I17 BROWN



I19

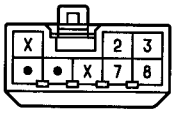

J 2

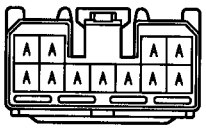

(HINT:SEE PAGE 7)

K 1, K 2 DARK GRAY



M 2 DARK GRAY

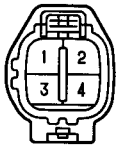

M 3 DARK GRAY

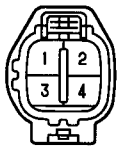

O 3,O 4 DARK GRAY

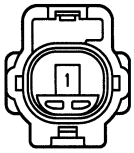

P 2 GRAY

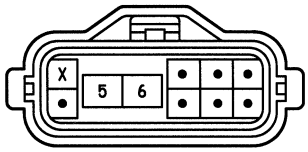

S11 BLUE

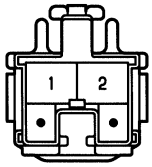

S16 GRAY

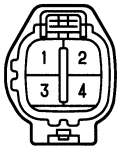

T 2 BLACK



T 5

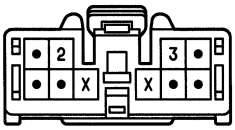

T 6

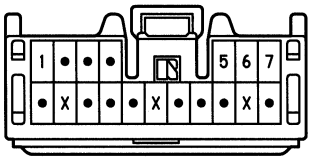

V 1 BROWN



V 2 BLACK



V 3 BLUE



V 6 BLUE



V10 BLACK



V12 BLACK



HEADLIGHT (FOR USA)

*1 : 2JZ–GTE
*2 : 2JZ–GE

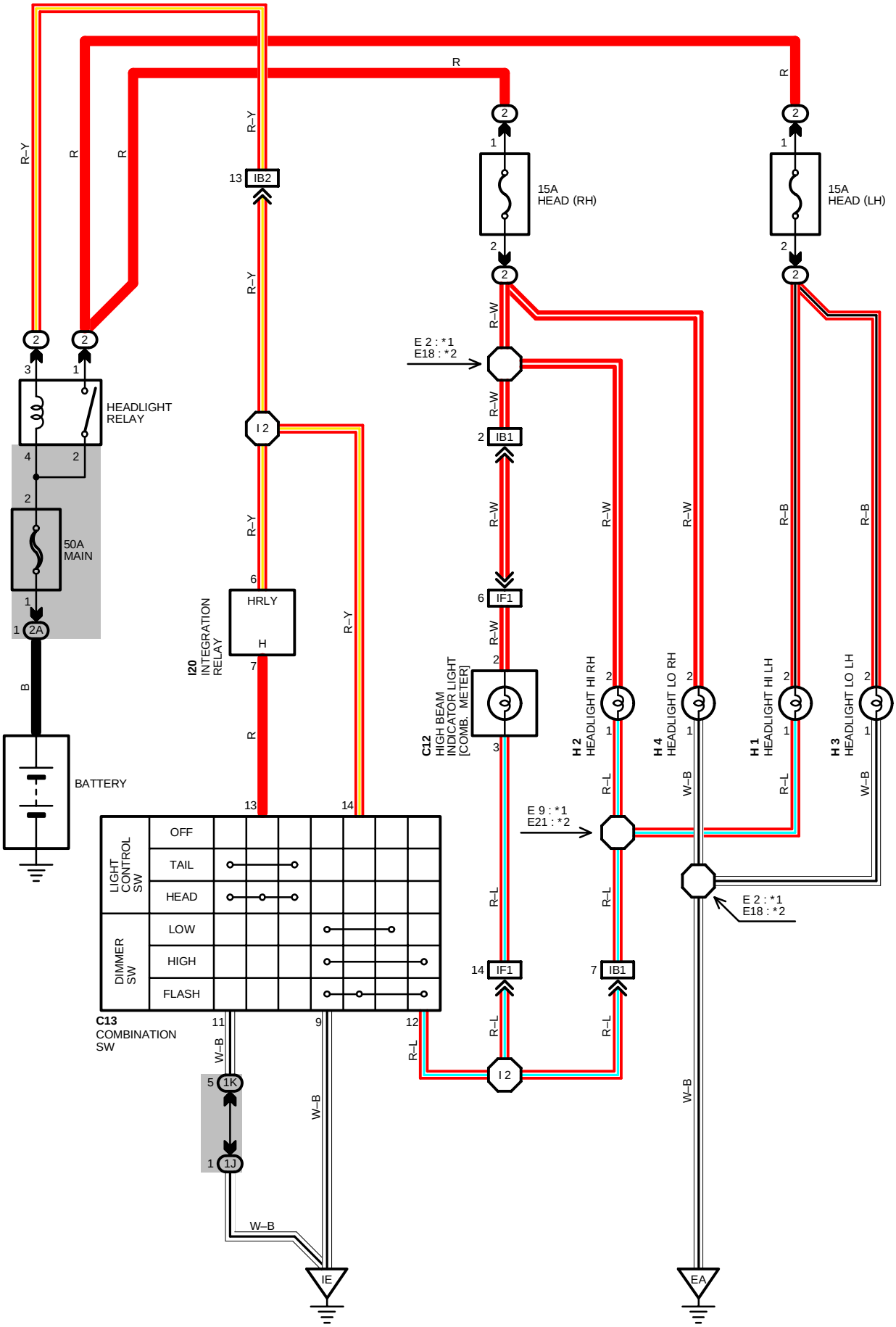

SERVICE HINTS

HEADLIGHT RELAY

2 1– : CLOSED WITH LIGHT CONTROL SW AT **HEAD** POSITION OR DIMMER SW AT **FLASH** POSITION

C13 LIGHT CONTROL SW [COMB. SW]

13–11 : CLOSED WITH LIGHT CONTROL SW AT **HEAD** POSITION

C13 DIMMER SW [COMB. SW]

14–9 : CLOSED WITH DIMMER SW AT **FLASH** POSITION

12–9 : CLOSED WITH DIMMER SW AT **HIGH** OR **FLASH** POSITION

: PARTS LOCATION

CODE	SEE PAGE	CODE	SEE PAGE	CODE	SEE PAGE
C12	28	**H 2**	24 (2JZ–GTE)	**H 4**	27 (2JZ–GTE)
C13	28		27 (2JZ–GE)		27 (2JZ–GE)
H 1	24 (2JZ–GTE)	**H 3**	24 (2JZ–GTE)	**I20**	29
	27 (2JZ–GE)		27 (2JZ–GE)		

: RELAY BLOCKS

CODE	SEE PAGE	RELAY BLOCKS (RELAY BLOCK LOCATION)
2	22	R/B NO. 2 (ENGINE COMPARTMENT LEFT)

: JUNCTION BLOCK AND WIRE HARNESS CONNECTOR

CODE	SEE PAGE	JUNCTION BLOCK AND WIRE HARNESS (CONNECTOR LOCATION)
1J	20	COWL WIRE AND J/B NO. 1 (LEFT KICK LEFT)
1K		
2A	22	BATTERY AND J/B NO. 2 (ENGINE COMPARTMENT LEFT)

: CONNECTOR JOINING WIRE HARNESS AND WIRE HARNESS

CODE	SEE PAGE	JOINING WIRE HARNESS AND WIRE HARNESS (CONNECTOR LOCATION)
IB1	36	ENGINE ROOM MAIN WIRE AND COWL WIRE (LEFT KICK PANEL)
IB2		
IF1	36	INSTRUMENT PANEL WIRE AND COWL WIRE (INSTRUMENT PANEL REINFORCEMENT LH)

: GROUND POINTS

CODE	SEE PAGE	GROUND POINTS LOCATION
EA	32 (2JZ–GTE)	FRONT SIDE OF RIGHT FENDER
	34 (2JZ–GE)	
IE	36	LEFT KICK PANEL

: SPLICE POINTS

CODE	SEE PAGE	WIRE HARNESS WITH SPLICE POINTS	CODE	SEE PAGE	WIRE HARNESS WITH SPLICE POINTS
E 2	32	ENGINE ROOM MAIN WIRE	**E21**	34	ENGINE ROOM MAIN WIRE
E 9			**I 2**	38	COWL WIRE
E18	34				

(2JZ–GTE) **C12**

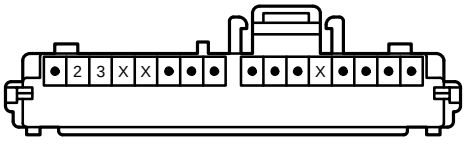

(2JZ–GE) **C12**

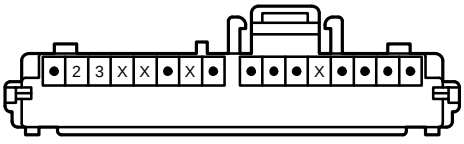

C13 BLACK

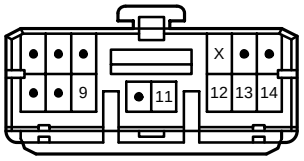

H 1 BLACK



H 2 BLACK



H 3 BROWN



H 4 BROWN



I20

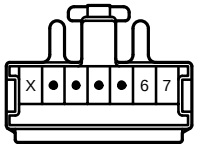

HEADLIGHT (FOR CANADA)

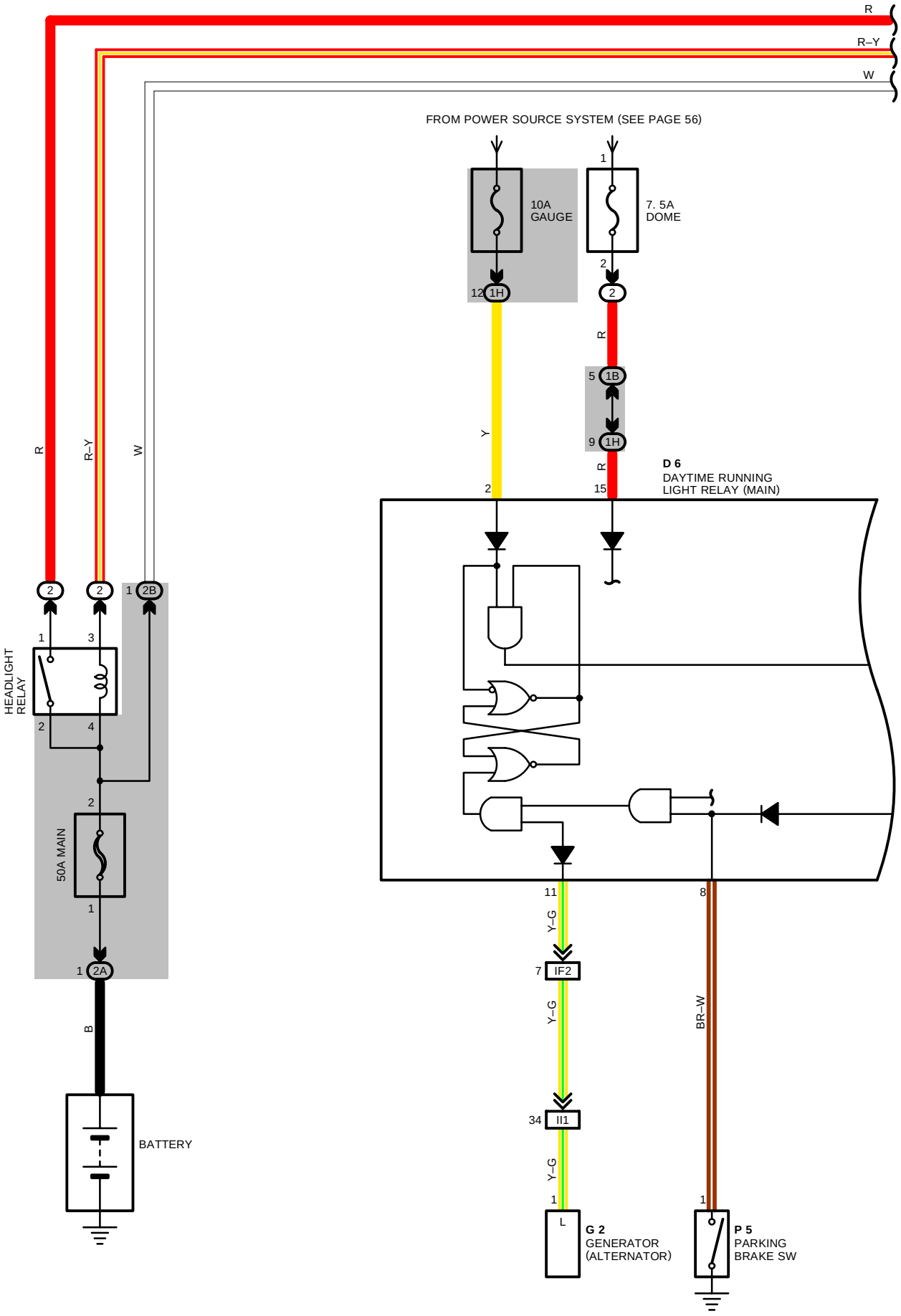

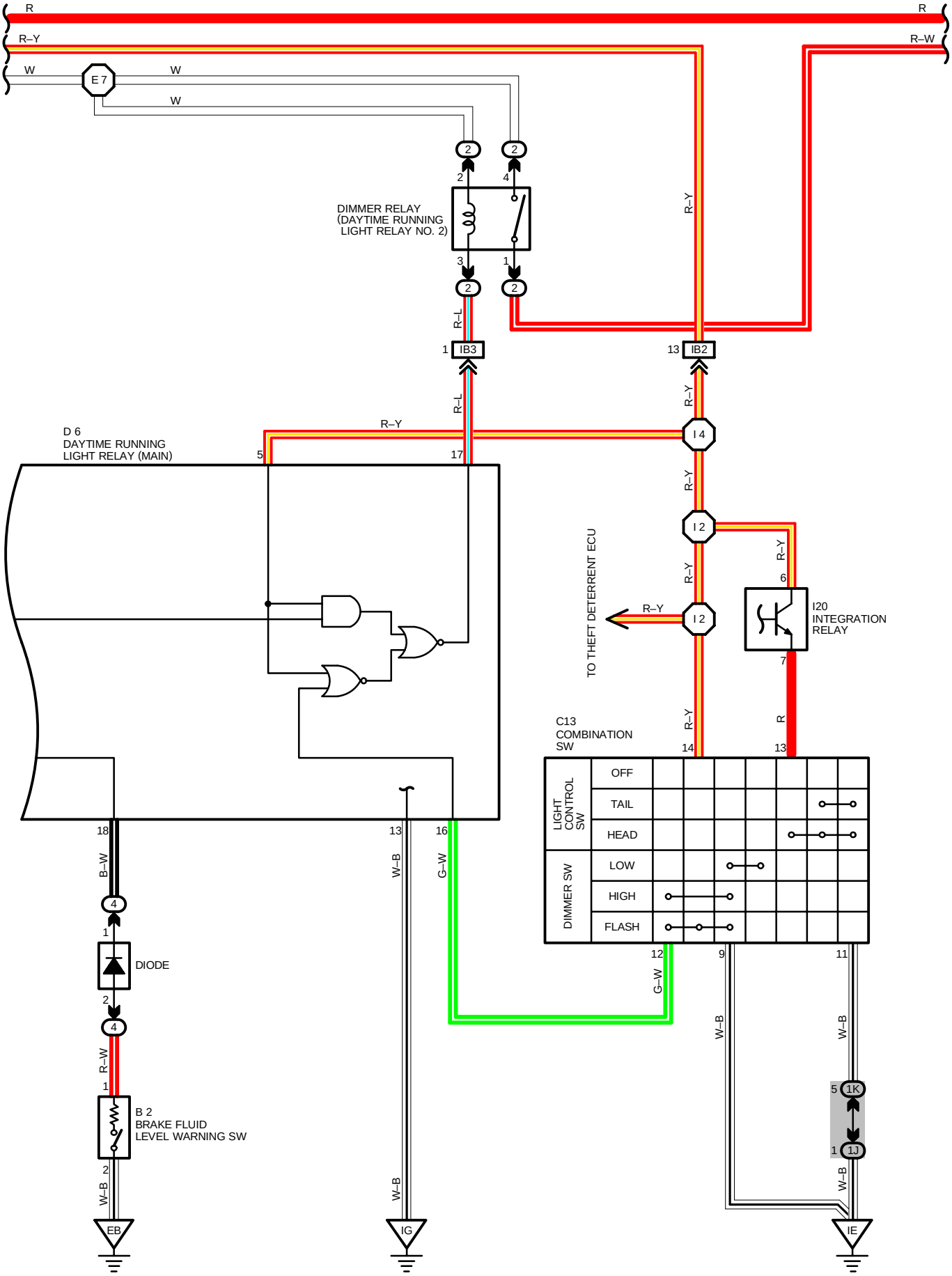
R
R–Y
W
E 7
W
W
R
R–W
DIMMER RELAY
(DAYTIME RUNNING
LIGHT RELAY NO. 2)
R–Y
R–L
IB3
IB2
D 6
DAYTIME RUNNING
LIGHT RELAY (MAIN)
I 4
I 2
I 2
TO THEFT DETERRENT ECU
I20
INTEGRATION
RELAY
C13
COMBINATION
SW
LIGHT
CONTROL
SW
OFF
TAIL
HEAD
DIMMER SW
LOW
HIGH
FLASH
B–W
DIODE
R–W
B 2
BRAKE FLUID
LEVEL WARNING SW
W–B
G–W
1K
1J
EB
IG
IE

HEADLIGHT (FOR CANADA)

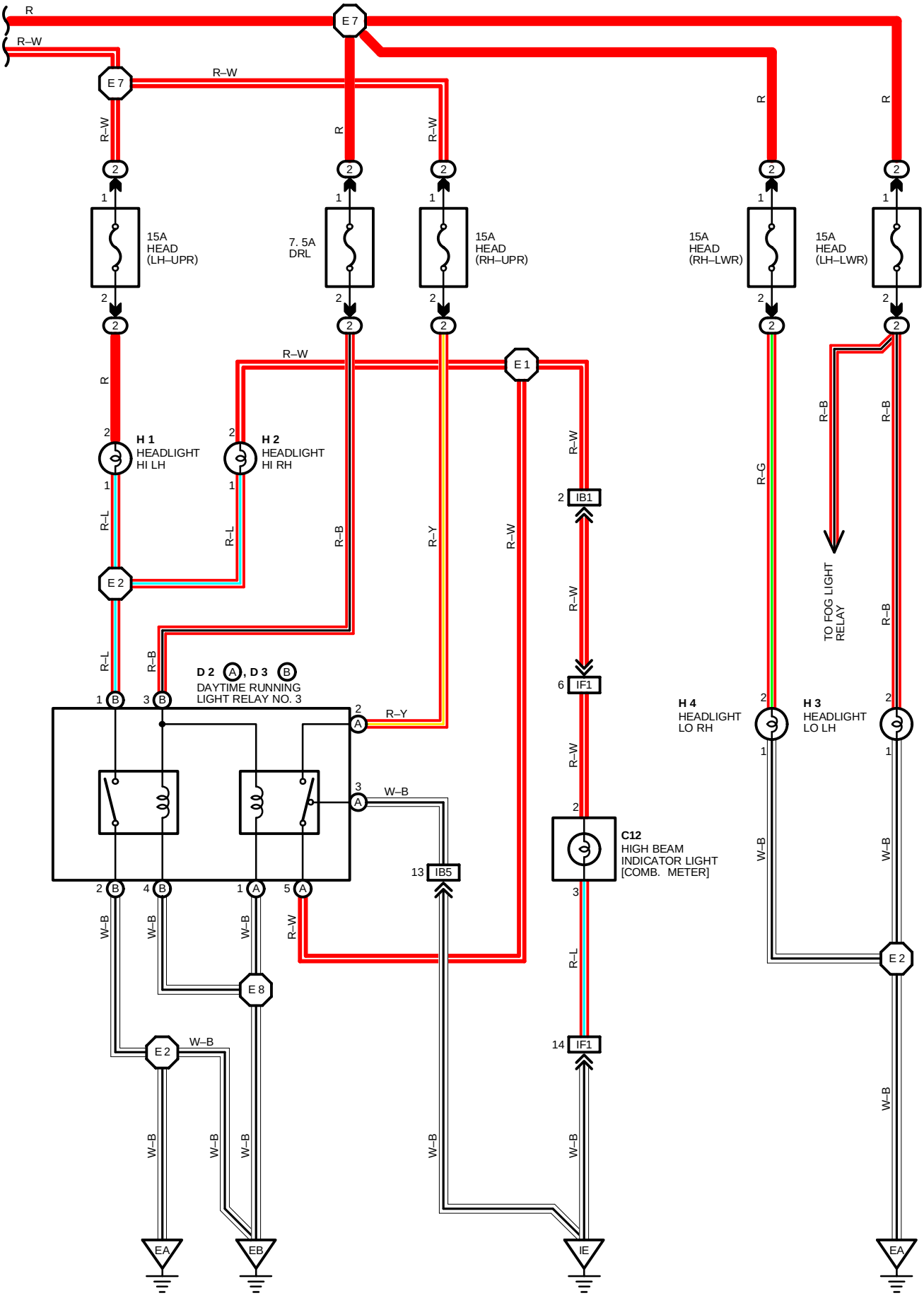

SYSTEM OUTLINE

VOLTAGE IS ALWAYS APPLIED FROM THE **MAIN** FUSE, THROUGH THE HEADLIGHT RELAY (COIL SIDE) TO **TERMINAL 5** OF THE DAYTIME RUNNING LIGHT RELAY (MAIN), **TERMINAL 6** OF INTEGRATION RELAY, **TERMINAL 14** OF DIMMER SW, DIMMER RELAY (DAYTIME RUNNING LIGHT RELAY NO. 2) (COIL SIDE), TO **TERMINAL 17** OF THE DAYTIME RUNNING LIGHT RELAY (MAIN). WHEN THE IGNITION SW IS TURNED ON, VOLTAGE FROM THE **GAUGE** FUSE IS APPLIED TO **TERMINAL 2** OF THE DAYTIME RUNNING LIGHT RELAY (MAIN).

1. DAYTIME RUNNING LIGHT OPERATION

WHEN THE ENGINE STARTS, VOLTAGE FROM **TERMINAL "L"** OF THE GENERATOR (ALTERNATOR) IS APPLIED TO **TERMINAL 11** OF THE DAYTIME RUNNING LIGHT RELAY (MAIN). IF THE PARKING BRAKE LEVER IS PULLED UP (PARKING BRAKE SW ON) AT THIS TIME, THE DAYTIME RUNNING LIGHT SYSTEM DOES NOT OPERATE. WHEN THE PARKING BRAKE IS RELEASED (PARKING BRAKE SW OFF), A SIGNAL IS OUTPUT FROM **TERMINAL 1** OF THE PARKING BRAKE SW TO **TERMINAL 8** OF THE DAYTIME RUNNING LIGHT RELAY (MAIN). THIS ACTIVATES THE DAYTIME RUNNING LIGHT RELAY (MAIN), TURNING ON THE DIMMER RELAY (DAYTIME RUNNING LIGHT RELAY NO. 2). CURRENT ALSO FLOWS FROM THE MAIN FUSE TO DIMMER RELAY (DAYTIME RUNNING LIGHT RELAY NO. 2) (POINT SIDE) → **HEAD (LH–UPR)** FUSE → HEADLIGHT HI LH → HEADLIGHT HI RH → **TERMINAL (A)5** OF DAYTIME RUNNING LIGHT RELAY NO. 3 → **TERMINAL (A)3** → **GROUND**, CAUSING THE HEADLIGHTS TO LIGHT UP AT APPROX. **20 %** OF THEIR NORMAL BRIGHTNESS.

ONCE THE DAYTIME RUNNING LIGHT RELAY (MAIN) HAS BEEN ACTIVATED AND THE HEADLIGHTS LIGHT UP, THE HEADLIGHTS REMAIN ON EVEN IF THE PARKING BRAKE LEVER IS ENGAGED AGAIN (PARKING BRAKE SW ON).

2. HEADLIGHT OPERATION

WHEN THE LIGHT CONTROL SW IS AT **HEAD** POSITION AND THE DIMMER SW AT **LOW** POSITION, CURRENT FLOWS FROM THE HEADLIGHT RELAY (COIL SIDE) TO **TERMINAL 6** OF THE INTEGRATION RELAY → **TERMINAL 7** → **TERMINAL 13** OF LIGHT CONTROL SW → **TERMINAL 11** → **GROUND**, ACTIVATING THE HEADLIGHT RELAY.

THIS CAUSES CURRENT TO FLOW FROM THE HEADLIGHT RELAY (POINT SIDE) TO THE **HEAD LWR** FUSE → HEADLIGHT LO → **GROUND**, CAUSING THE HEADLIGHTS TO LIGHT UP AT NORMAL BRIGHTNESS. SIMULTANEOUSLY, CURRENT FLOWS FROM THE **DRL** FUSE → DAYTIME RUNNING LIGHT RELAY NO. 3 (COIL SIDE) → **GROUND**, ACTIVATING RELAY NO. 3.

WHEN THE DIMMER SW IS AT **HIGH** POSITION, **TERMINAL 12** OF THE DIMMER SW OUTPUTS A SIGNAL TO **TERMINAL 16** OF THE DAYTIME RUNNING LIGHT RELAY (MAIN) TO ACTIVATE IT. THIS TURNS ON DIMMER RELAY (DAYTIME RUNNING LIGHT RELAY NO. 2). SO CURRENT FLOWS FROM DIMMER RELAY (DAYTIME RUNNING LIGHT RELAY NO. 2) (POINT SIDE) TO THE **HEAD (LH–UPR)** FUSE → HEADLIGHT HI LH → DAYTIME RUNNING LIGHT RELAY NO. 3 (POINT SIDE) → **GROUND**, AND FROM THE **HEAD (RH–UPR)** FUSE → DAYTIME RUNNING LIGHT RELAY NO. 3 (POINT SIDE) → HEADLIGHT HI RH → DAYTIME RUNNING LIGHT RELAY NO. 3 (POINT SIDE) → **GROUND**, CAUSING THE HEADLIGHTS TO OPERATE AT HI.

WHEN THE DIMMER SW IS AT **FLASH** POSITION, CURRENT FROM THE HEADLIGHT RELAY (COIL SIDE) FLOWS TO **TERMINAL 14** OF THE DIMMER SW → **TERMINAL 9** → **GROUND**, ACTIVATING THE RELAY. SIMULTANEOUSLY, CURRENT FROM THE HEADLIGHT RELAY (POINT SIDE) FLOWS TO HEADLIGHT LO, LIGHTING UP HEADLIGHT LO AND ACTIVATING DAYTIME RUNNING LIGHT RELAY NO. 3. THEN **TERMINAL 12** OF THE DIMMER SW OUTPUTS A SIGNAL TO **TERMINAL 16** OF THE DAYTIME RUNNING LIGHT RELAY (MAIN), ACTIVATING THE DAYTIME RUNNING LIGHT RELAY (MAIN) SO THAT CURRENT FLOWS TO HEADLIGHT HI LIKE IT DOES FOR **HIGH** POSITION. THIS CAUSES ALL HEADLIGHTS TO LIGHT UP.

SERVICE HINTS

D 6 DAYTIME RUNNING LIGHT RELAY (MAIN)

15–GROUND : ALWAYS APPROX. **12** VOLTS
2–GROUND : APPROX. **12** VOLTS WITH THE IGNITION SW AT **ON** POSITION
13–GROUND : ALWAYS CONTINUOUS
5–GROUND : APPROX. **12** VOLTS WITH THE DAYTIME RUNNING LIGHT SYSTEM DOES NOT OPERATE OR LIGHT CONTROL SW AT **OFF** OR **TAIL** POSITION (WITH THE CONNECTOR IS DISCONNECTED, ALWAYS APPROX. **12** VOLTS)
8–GROUND : CONTINUOUS WITH THE PARKING BRAKE LEVER RELEASED

HEADLIGHT (FOR CANADA)

: PARTS LOCATION

CODE		SEE PAGE	CODE	SEE PAGE	CODE	SEE PAGE
B 2		24 (2JZ–GTE)	**D 6**	28	**H 4**	24 (2JZ–GTE)
C12		28	**G 2**	24 (2JZ–GTE)	**I20**	29
C13		28	**H 1**	24 (2JZ–GTE)	**P 5**	29
D 2	A	24	**H 2**	24 (2JZ–GTE)		
D 3	B	24	**H 3**	24 (2JZ–GTE)		

: RELAY BLOCKS

CODE	SEE PAGE	RELAY BLOCKS (RELAY BLOCK LOCATION)
2	22	R/B NO. 2 (ENGINE COMPARTMENT LEFT)
4	23	R/B NO. 4 (LEFT KICK PANEL)

: JUNCTION BLOCK AND WIRE HARNESS CONNECTOR

CODE	SEE PAGE	JUNCTION BLOCK AND WIRE HARNESS (CONNECTOR LOCATION)
1B	20	ENGINE ROOM MAIN WIRE AND J/B NO. 1 (LEFT KICK PANEL)
1H	20	COWL WIRE AND J/B NO. 1 (LEFT KICK PANEL)
1J		
1K		
2A	22	BATTERY AND J/B NO. 2 (ENGINE COMPARTMENT LEFT)
2B	22	ENGINE ROOM MAIN WIRE AND J/B NO. 2 (ENGINE COMPARTMENT LEFT)

: CONNECTOR JOINING WIRE HARNESS AND WIRE HARNESS

CODE	SEE PAGE	JOINING WIRE HARNESS AND WIRE HARNESS (CONNECTOR LOCATION)
IB1	36	ENGINE ROOM MAIN WIRE AND COWL WIRE (LEFT KICK PANEL)
IB2		
IB3		
IB5	36	ENGINE ROOM MAIN WIRE AND COWL WIRE (RIGHT KICK PANEL)
IF1	36	INSTRUMENT PANEL WIRE AND COWL WIRE (INSTRUMENT PANEL REINFORCEMENT LH)
IF2		
II1	36	ENGINE WIRE AND INSTRUMENT PANEL WIRE (RIGHT KICK PANEL)

: GROUND POINTS

CODE	SEE PAGE	GROUND POINTS LOCATION
EA	32 (2JZ–GTE)	FRONT SIDE OF RIGHT FENDER
EB	32 (2JZ–GTE)	FRONT SIDE OF LEFT FENDER
IE	36	LEFT KICK PANEL
IG	36	RIGHT KICK PANEL

: SPLICE POINTS

CODE	SEE PAGE	WIRE HARNESS WITH SPLICE POINTS	CODE	SEE PAGE	WIRE HARNESS WITH SPLICE POINTS
E 1	32	ENGINE ROOM MAIN WIRE	**E 8**	32	ENGINE ROOM MAIN WIRE
E 2			**I 2**	38	COWL WIRE
E 7			**I 4**		

B 2 GRAY



C12

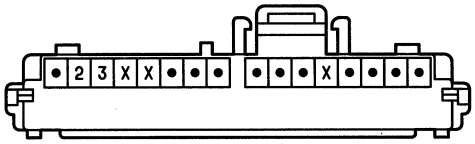

C13 BLACK

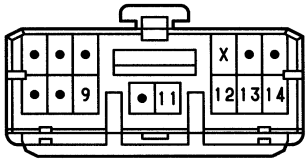

D 2 (A) GRAY

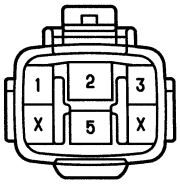

D 3 (B) GRAY



D 6 GRAY

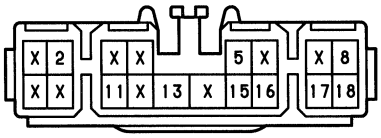

G 2 BLACK

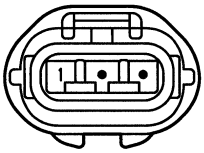

H 1 BLACK



H 2 BLACK



H 3 BROWN



H 4 BROWN



I20

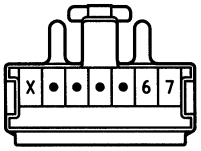

P 5



TAILLIGHT

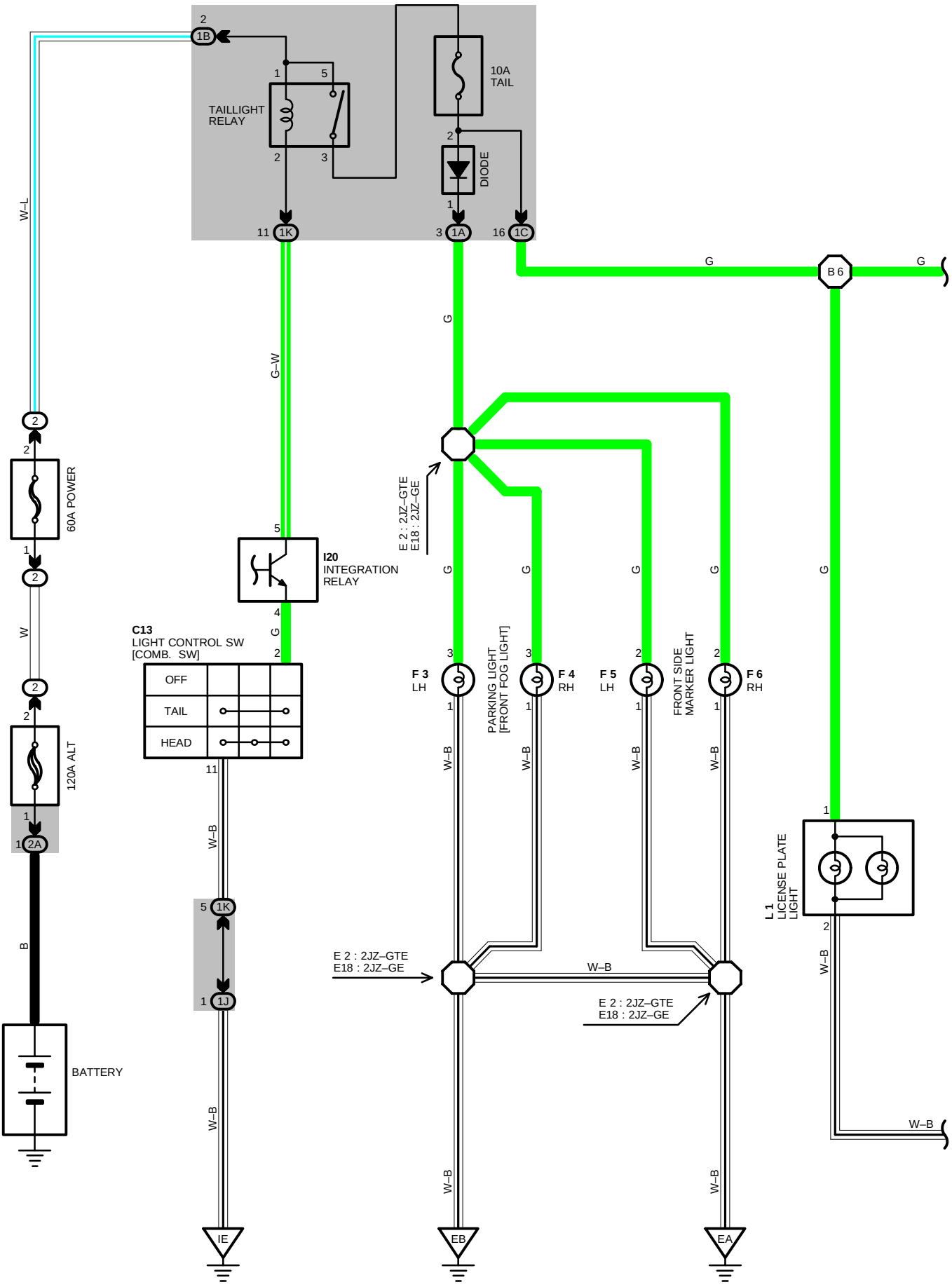
2
1B
1
5
TAILLIGHT
RELAY
2
3
10A
TAIL
2
DIODE
1
11
1K
3
1A
16
1C
W–L
G
B 6
G
G
G–W
2
2
60A POWER
1
2
W
2
2
120A ALT
1
1
2A
B
BATTERY
5
I20
INTEGRATION
RELAY
4
G
C13
LIGHT CONTROL SW
[COMB. SW]
2
OFF
TAIL
HEAD
11
W–B
5
1K
1
1J
W–B
IE
E 2 : 2JZ–GTE
E18 : 2JZ–GE
G
G
G
G
G
F 3
LH
3
1
F 4
RH
3
1
PARKING LIGHT
[FRONT FOG LIGHT]
F 5
LH
2
1
F 6
RH
2
1
FRONT SIDE
MARKER LIGHT
W–B
W–B
W–B
W–B
E 2 : 2JZ–GTE
E18 : 2JZ–GE
W–B
E 2 : 2JZ–GTE
E18 : 2JZ–GE
W–B
W–B
EB
EA
1
L 1
LICENSE PLATE
LIGHT
2
W–B
W–B

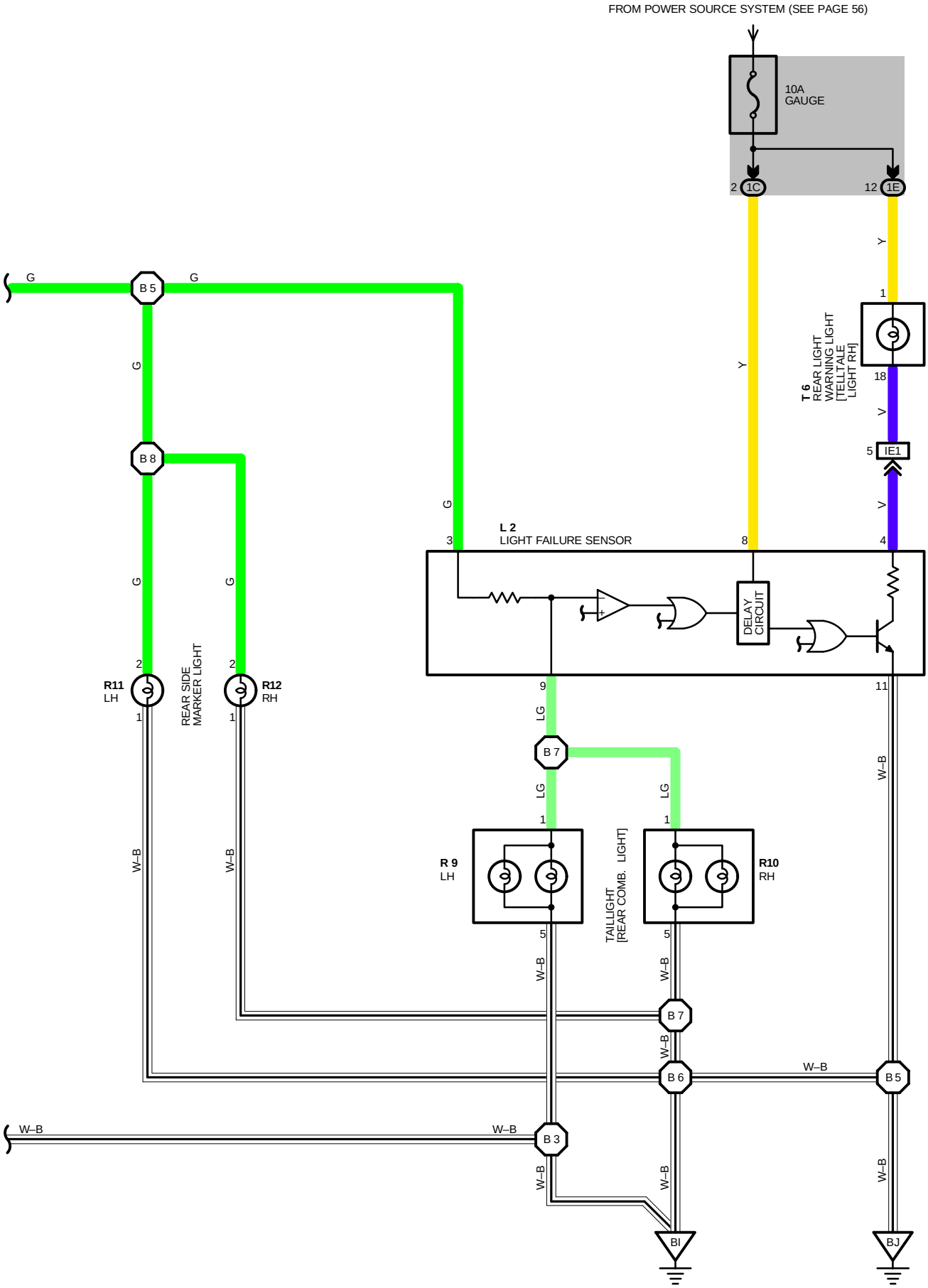
FROM POWER SOURCE SYSTEM (SEE PAGE 56)
10A
GAUGE
2
1C
12
1E
Y
1
T 6
REAR LIGHT
WARNING LIGHT
[TELLTALE
LIGHT RH]
18
V
5
IE1
V
4
Y
G
B 5
G
G
B 8
G
G
G
3
L 2
LIGHT FAILURE SENSOR
8
DELAY
CIRCUIT
2
R11
LH
1
REAR SIDE
MARKER LIGHT
2
R12
RH
1
9
LG
11
W–B
B 7
LG
LG
1
1
R 9
LH
TAILLIGHT
[REAR COMB. LIGHT]
R10
RH
5
5
W–B
W–B
W–B
W–B
B 7
W–B
W–B
B 6
W–B
B 5
W–B
W–B
B 3
W–B
W–B
W–B
BI
BJ

TAILLIGHT

SYSTEM OUTLINE

WHEN THE LIGHT CONTROL SW IS TURNED TO **TAIL** OR **HEAD** POSITION. THE CURRENT FLOWS TO **TERMINAL 3** OF THE LIGHT FAILURE SENSOR THROUGH THE **TAIL** FUSE.

WHEN THE IGNITION SW IS TURNED ON, THE CURRENT FLOWS FROM THE **GAUGE** FUSE TO **TERMINAL 8** OF THE LIGHT FAILURE SENSOR, ANO ALSO FLOWS THROUGH THE REAR LIGHT WARNING LIGHT TO **TERMINAL 4** OF THE LIGHT FAILURE SENSOR.

TAILLIGHT DISCONNECTION WARNING

WITH THE IGNITION SW ON AND THE LIGHT CONTROL SW TURNED TO **TAIL** OR **HEAD** POSITION, IF THE TAILLIGHT CIRCUIT IS OPEN, THE LIGHT FAILURE SENSOR DETECTS THE FAILURE BY THE CHANGE IN CURRENT FLOWING FROM **TERMINAL 3** OF THE LIGHT FAILURE SENSOR TO **TERMINAL 9**, AND THE WARNING CIRCUIT OF THE LIGHT FAILURE SENSOR IS ACTIVATED.

AS A RESULT, THE CURRENT FLOWS FROM **TERMINAL 4** OF THE LIGHT FAILURE SENSOR → **TERMINAL 11** → **GROUND** AND TURNS THE REAR LIGHT WARNING LIGHT ON, WHICH REMAINS ON UNTIL THE LIGHT CONTROL SW IS TURNED OFF.

SERVICE HINTS

TAILLIGHT RELAY

5–3: CLOSED WITH LIGHT CONTROL SW AT **TAIL** OR **HEAD** POSITION

L 2 LIGHT FAILURE SENSOR

4, 8–GROUND: APPROX. **12** VOLTS WITH IGNITION SW AT **ON** POSITION

3–GROUND: APPROX. **12** VOLTS WITH LIGHT CONTROL SW AT **TAIL** OR **HEAD** POSITION

11–GROUND: ALWAYS CONTINUOUS

: PARTS LOCATION

CODE	SEE PAGE	CODE	SEE PAGE	CODE	SEE PAGE
C13	28	**F 5**	26 (2JZ–GE)	**R 9**	30
F 3	24 (2JZ–GTE)	**F 6**	24 (2JZ–GTE)	**R10**	30
	26 (2JZ–GE)		26 (2JZ–GE)	**R11**	30
F 4	24 (2JZ–GTE)	**I20**	29	**R12**	30
	26 (2JZ–GE)	**L 1**	30	**T 6**	29
F 5	24 (2JZ–GTE)	**L 2**	30		

: RELAY BLOCKS

CODE	SEE PAGE	RELAY BLOCKS (RELAY BLOCK LOCATION)
2	22	R/B NO. 2 (ENGINE COMPARTMENT LEFT)

: JUNCTION BLOCK AND WIRE HARNESS CONNECTOR

CODE	SEE PAGE	JUNCTION BLOCK AND WIRE HARNESS (CONNECTOR LOCATION)
1A	20	ENGINE ROOM MAIN WIRE AND J/B NO. 1 (LEFT KICK PANEL)
1B		
1C	20	FLOOR NO. 2 WIRE AND J/B NO. 1 (LEFT KICK PANEL)
1E	20	INSTRUMENT PANEL WIRE AND J/B NO. 1 (LEFT KICK PANEL)
1J	20	COWL WIRE AND J/B NO. 1 (LEFT KICK PANEL)
1K		
2A	22	BATTERY AND J/B NO. 2 (ENGINE COMPARTMENT LEFT)

: CONNECTOR JOINING WIRE HARNESS AND WIRE HARNESS

CODE	SEE PAGE	JOINING WIRE HARNESS AND WIRE HARNESS (CONNECTOR LOCATION)
IE1	36	INSTRUMENT PANEL WIRE AND FLOOR NO. 2 WIRE (LEFT KICK PANEL)

: GROUND POINTS

CODE	SEE PAGE	GROUND POINTS LOCATION
EA	32 (2JZ–GTE)	FRONT SIDE OF RIGHT FENDER
	34 (2JZ–GE)	
EB	32 (2JZ–GTE)	FRONT SIDE OF LEFT FENDER
	34 (2JZ–GE)	
IE	36	LEFT KICK PANEL
BI	40	LEFT QUARTER PILLAR
BJ	40	LOWER BACK PANEL CENTER

: SPLICE POINTS

CODE	SEE PAGE	WIRE HARNESS WITH SPLICE POINTS	CODE	SEE PAGE	WIRE HARNESS WITH SPLICE POINTS
E 2	32	ENGINE ROOM MAIN WIRE	B 6	40	FLOOR NO. 2 WIRE
E18	34		B 7		
B 3	40	FLOOR NO. 2 WIRE	B 8		
B 5					

C13 BLACK

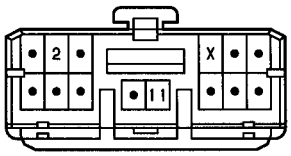

F 3 GRAY

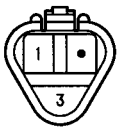

F 4 GRAY

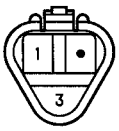

F 5 GRAY



F 6 GRAY



I20

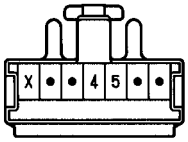

L 1 GRAY



L 2

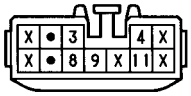

R 9

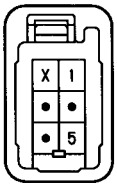

R10

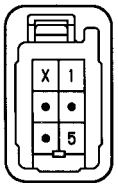

R11 GRAY



R12 GRAY



T 6

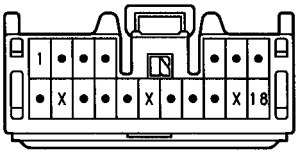

FOG LIGHT

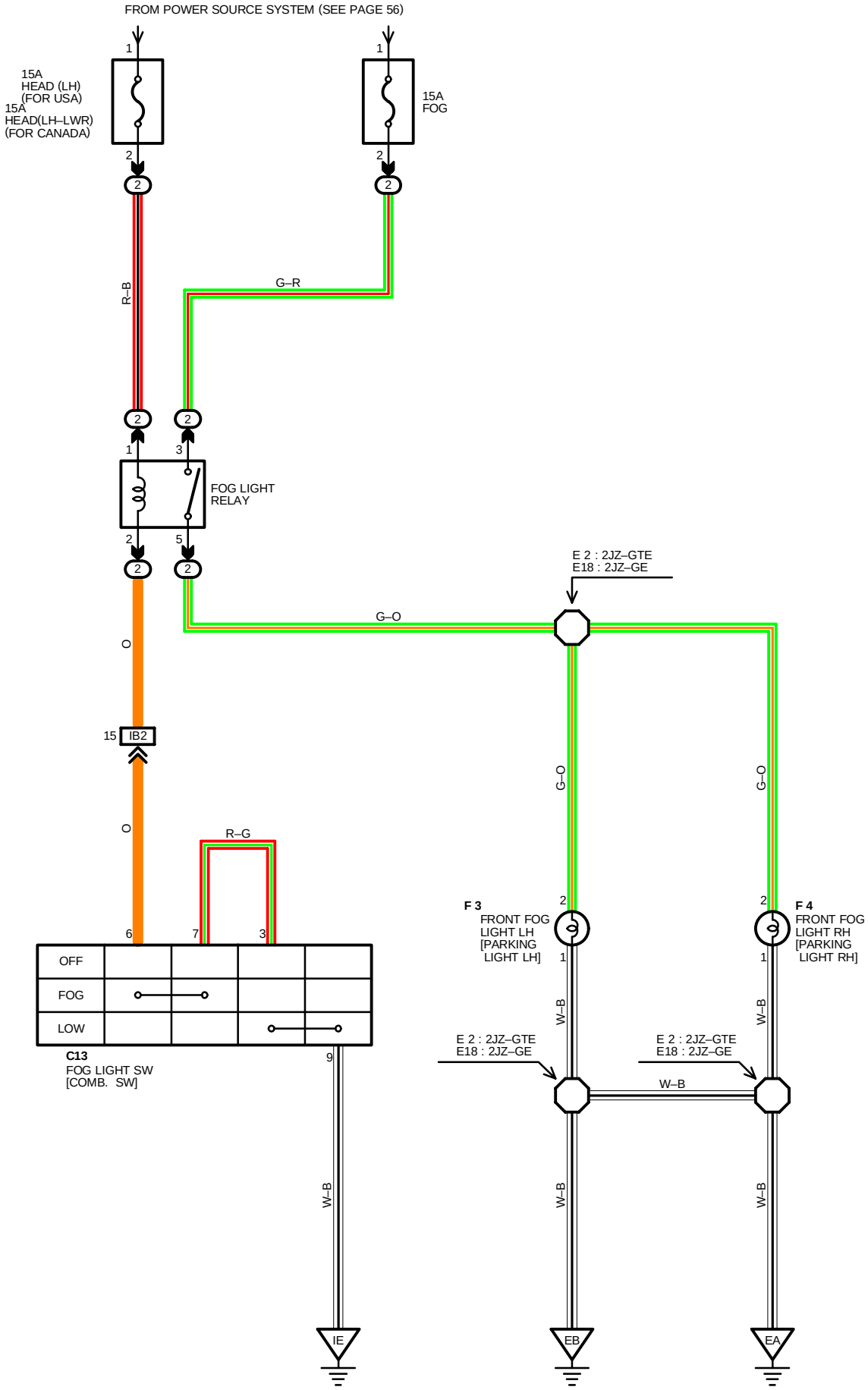
FROM POWER SOURCE SYSTEM (SEE PAGE 56)
15A
HEAD (LH)
(FOR USA)
15A
HEAD(LH–LWR)
(FOR CANADA)
15A
FOG
R–B
G–R
FOG LIGHT
RELAY
E 2 : 2JZ–GTE
E18 : 2JZ–GE
G–O
O
15 IB2
O
R–G
G–O
G–O
F 3
FRONT FOG
LIGHT LH
[PARKING
LIGHT LH]
F 4
FRONT FOG
LIGHT RH
[PARKING
LIGHT RH]
OFF
FOG
LOW
C13
FOG LIGHT SW
[COMB. SW]
W–B
W–B
W–B
E 2 : 2JZ–GTE
E18 : 2JZ–GE
E 2 : 2JZ–GTE
E18 : 2JZ–GE
W–B
W–B
W–B
IE
EB
EA

SERVICE HINTS

FOG LIGHT RELAY

(2) 3–**(2)** 5 : CLOSED WITH LIGHT CONTROL SW AT **HEAD** POSITION, DIMMER SW AT **LOW** POSITION AND FOG LIGHT SW **ON** POSITION

: PARTS LOCATION

CODE	SEE PAGE	CODE	SEE PAGE	CODE	SEE PAGE
C13	28	**F 3**	26 (2JZ–GE)	**F 4**	26 (2JZ–GE)
F 3	24 (2JZ–GTE)	**F 4**	24 (2JZ–GTE)		

: RELAY BLOCKS

CODE	SEE PAGE	RELAY BLOCKS (RELAY BLOCK LOCATION)
2	22	R/B NO. 2 (ENGINE COMPARTMENT LEFT)

: CONNECTOR JOINING WIRE HARNESS AND WIRE HARNESS

CODE	SEE PAGE	JOINING WIRE HARNESS AND WIRE HARNESS (CONNECTOR LOCATION)
IB2	36	ENGINE ROOM MAIN WIRE AND COWL WIRE (LEFT KICK PANEL)

: GROUND POINTS

CODE	SEE PAGE	GROUND POINTS LOCATION
EA	32 (2JZ–GTE)	FRONT SIDE OF RIGHT FENDER
	34 (2JZ–GE)	
EB	32 (2JZ–GTE)	FRONT SIDE OF LEFT FENDER
	34 (2JZ–GE)	
IE	36	LEFT KICK PANEL

: SPLICE POINTS

CODE	SEE PAGE	WIRE HARNESS WITH SPLICE POINTS	CODE	SEE PAGE	WIRE HARNESS WITH SPLICE POINTS
E 2	32	ENGINE ROOM MAIN WIRE	**E18**	34	ENGINE ROOM MAIN WIRE

C13 BLACK

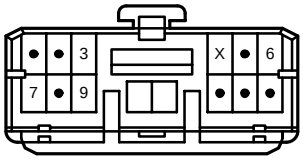

F 3 GRAY



F 4 GRAY



LIGHT AUTO TURN OFF

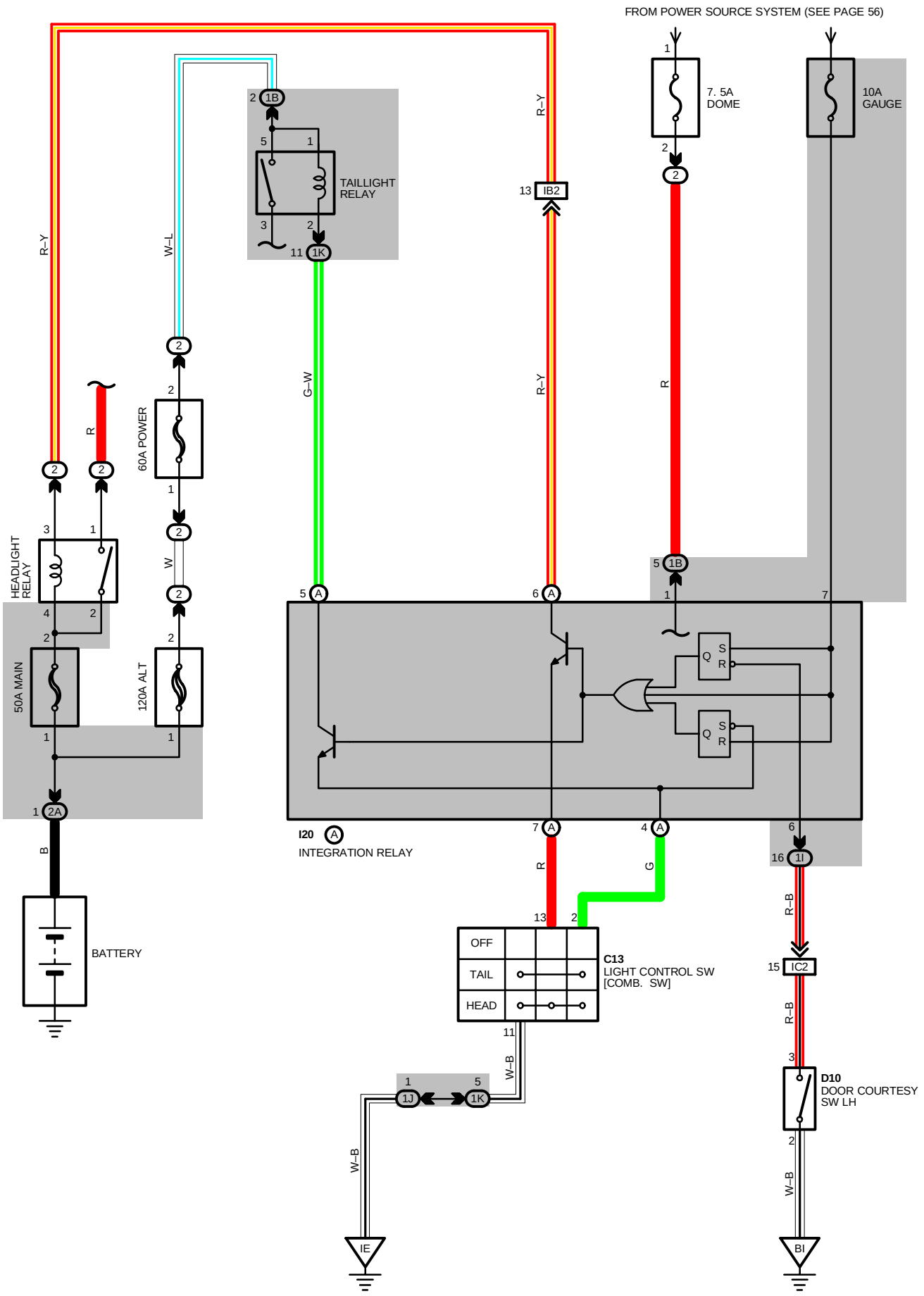

SYSTEM OUTLINE

WITH THE IGNITION SW TURNED ON, THE CURRENT FLOWS TO **TERMINAL 7** OF THE INTEGRATION RELAY THROUGH **GAUGE** FUSE.

VOLTAGE IS APPLIED AT ALL TIMES TO **TERMINAL (A) 5** OF THE INTEGRATION RELAY THROUGH THE TAILLIGHT RELAY COIL, AND TO **TERMINAL (A) 6** THROUGH THE HEADLIGHT RELAY COIL.

1. NORMAL LIGHTING OPERATION

(TURN TAILLIGHT ON)

WITH LIGHT CONTROL SW TURNED TO **TAIL** POSITION, A SIGNAL IS INPUT INTO **TERMINAL (A) 4** OF THE INTEGRATION RELAY. DUE TO THIS SIGNAL, THE CURRENT FLOWING TO **TERMINAL (A) 5** OF THE RELAY FLOWS TO **TERMINAL (A) 4** → **TERMINAL 2** OF THE LIGHT CONTROL SW → **TERMINAL 11** → TO **GROUND**, AND TAILLIGHT RELAY CAUSES TAILLIGHTS TO TURN ON.

(TURN HEADLIGHT ON)

WITH LIGHT CONTROL SW TURNED TO **HEAD** POSITION, A SIGANL IS INPUT INTO **TERMINAL (A) 4** AND **(A) 7** OF THE INTEGRATION RELAY. DUE TO THIS SIGNAL, THE CURRENT FLOWING TO **TERMINAL (A) 6** OF THE RELAY FLOWS TO **TERMINAL (A) 7** → **TERMINAL 13** OF THE LIGHT CONTROL SW → **TERMINAL 11** → TO **GROUND** IN THE HEADLIGHT CIRCUIT, AND CAUSES TAILLIGHT AND HEADLIGHT RELAY TO TURN THE LIGHTS ON. THE TAILLIGHT CIRCUIT IS SAME AS ABOVE.

2. LIGHT AUTO TURN OFF OPERATION

WITH LIGHT ON AND THE IGNITION SW TURNED OFF (INPUT SIGNAL GOES TO **TERMINAL 7** OF THE RELAY), WHEN THE DRIVER'S DOOR IS OPENED (INPUT SIGNAL GOES TO **TERMINAL 6** OF THE RELAY), THE RELAY OPERATES AND THE CURRENT IS CUT OFF WHICH FLOWS FROM **TERMINAL (A) 5** OF THE RELAY TO **TERMINAL (A) 4** IN TAILLIGHT CIRCUIT AND FROM **TERMINAL (A) 6** TO **TERMINAL (A) 7** IN HEADLIGHT CIRCUIT.

AS A RESULT, ALL LIGHTS ARE TURNED OFF AUTOMATICALLY.

SERVICE HINTS

HEADLIGHT RELAY

2 1– : CLOSED WITH LIGHT CONTROL SW AT **HEAD** POSITION OR DIMMER SW AT **FLASH** POSITION (FOR USA)
: CLOSED WITH ENGINE RUNNING AND PARKING BRAKE LEVER RELEASED (FOR CANADA)

TAILLIGHT RELAY

3–5 : CLOSED WITH LIGHT CONTROL SW AT **TAIL** OR **HEAD** POSITION

D10 DOOR COURTESY SW LH

3–2 : CLOSED WITH LH DOOR OPEN

I20(A) INTEGRATION RELAY

7–GROUND : APPROX. **12** VOLTS WITH IGNITION SW AT **ON** POSITION
6–GROUND : CONTINUOUS WITH LH DOOR OPEN
1–GROUND : ALWAYS APPROX. **12** VOLTS
(A) 5–GROUND : ALWAYS APPROX. **12** VOLTS
(A) 6–GROUND : ALWAYS APPROX. **12** VOLTS
(A) 7–GROUND : CONTINUOUS WITH LIGHT CONTROL SW AT **HEAD** POSITION
(A) 4–GROUND : CONTINUOUS WITH LIGHT CONTROL SW AT **TAIL** OR **HEAD** POSITION

: PARTS LOCATION

CODE	SEE PAGE	CODE	SEE PAGE	CODE		SEE PAGE
C13	28	**D10**	30	**I20**	A	29

: RELAY BLOCKS

CODE	SEE PAGE	RELAY BLOCKS (RELAY BLOCK LOCATION)
2	22	R/B NO. 2 (ENGINE COMPARTMENT LEFT

: JUNCTION BLOCK AND WIRE HARNESS CONNECTOR

CODE	SEE PAGE	JUNCTION BLOCK AND WIRE HARNESS (CONNECTOR LOCATION)
1B	20	ENGINE ROOM MAIN WIRE AND J/B NO. 1 (LEFT KICK PANEL)
1I	20	COWL WIRE AND J/B NO. 1 (LEFT KICK PANEL)
1J		
1K		
2A	22	BATTERY AND J/B NO. 2 (ENGINE COMPARTMENT LEFT)

LIGHT AUTO TURN OFF

: CONNECTOR JOINING WIRE HARNESS AND WIRE HARNESS

CODE	SEE PAGE	JOINING WIRE HARNESS AND WIRE HARNESS (CONNECTOR LOCATION)
IB2	36	ENGINE ROOM MAIN WIRE AND COWL WIRE (LEFT KICK PANEL)
IC2	36	FLOOR NO. 2 WIRE AND COWL WIRE (LEFT KICK PANEL)

: GROUND POINTS

CODE	SEE PAGE	GROUND POINTS LOCATION
IE	36	LEFT KICK PANEL
BI	40	LEFT QUARTER PILLAR

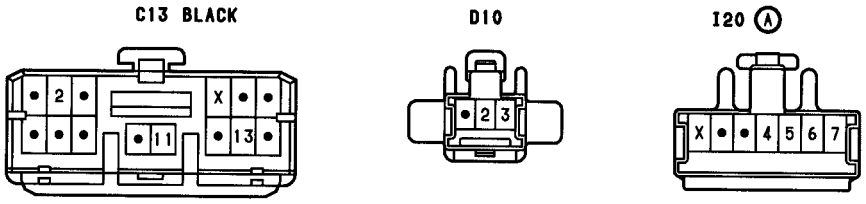

C10 (B) BLUE

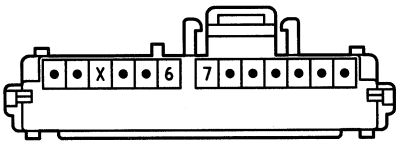

(2JZ-GTE) C12 (A)

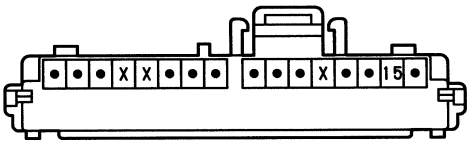

(2JZ-GE) C12 (A)

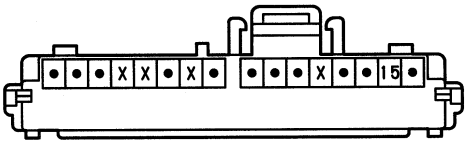

C13 BLACK

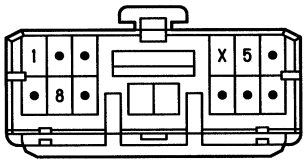

F 7 GRAY

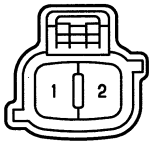

F 8 GRAY



H10 BLACK

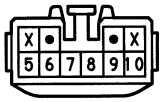

J 1

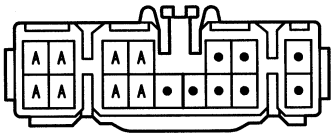

(HINT:SEE PAGE 7)

R 9

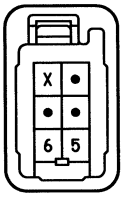

R10

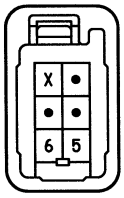

TURN SIGNAL AND HAZARD WARNING LIGHT

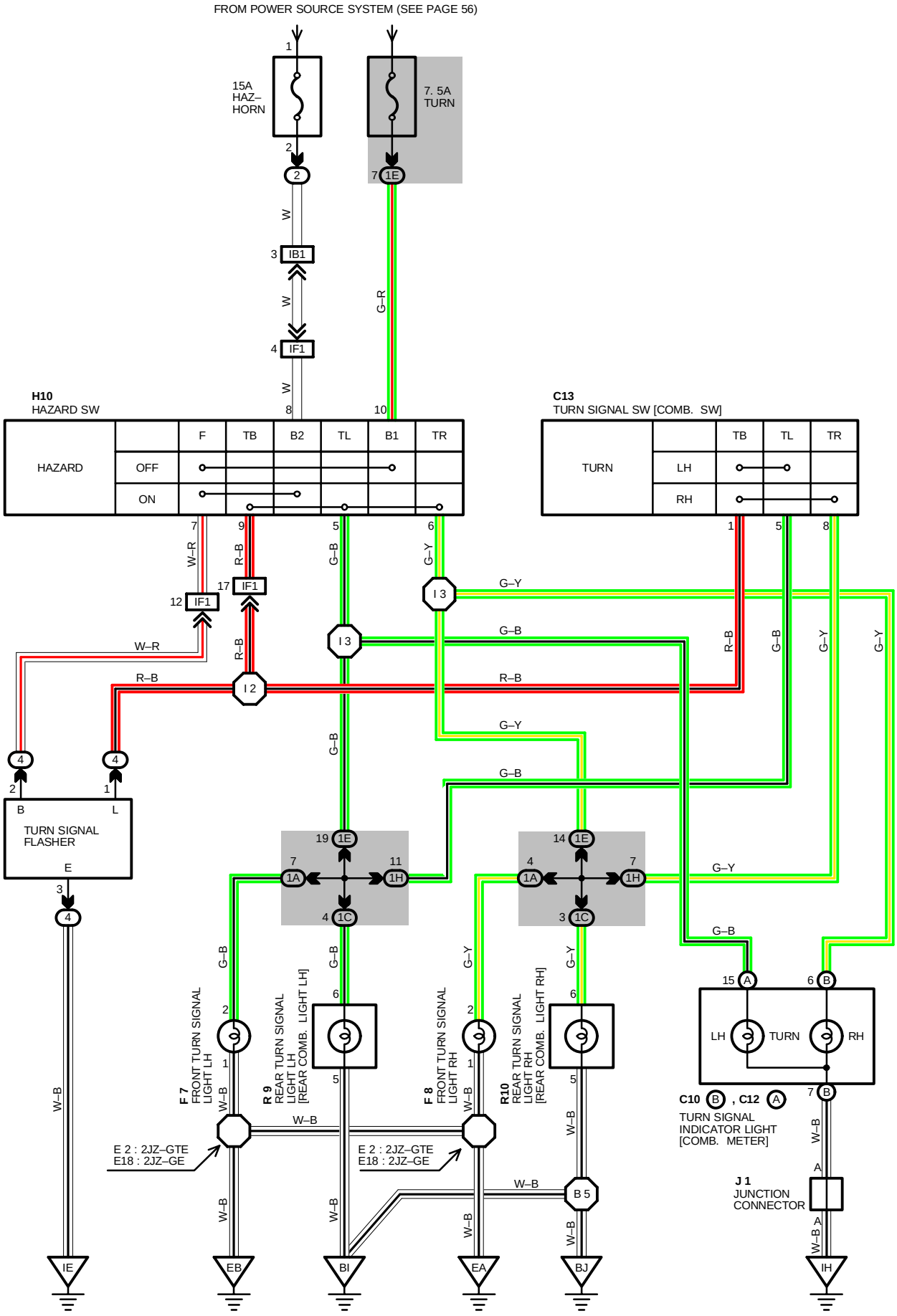

SERVICE HINTS

TURN SIGNAL FLASHER

(4) 1–GROUND : CHANGES FROM APPROX.**12** VOLTS TO **0** VOLTS WITH IGNITION SW ON AND TURN SIGNAL SW LEFT OR RIGHT, OR WITH HAZARD WARNING SW ON

(4) 2–GROUND : APPROX. **12** VOLTS WITH IGNITION SW ON OR HAZARD WARNING SW ON

(4) 3–GROUND: ALWAYS CONTINUOUS

: PARTS LOCATION

CODE		SEE PAGE	CODE	SEE PAGE	CODE	SEE PAGE
C10	B	28	**F 7**	26 (2JZ–GE)	**J 1**	29
C12	A	28	**F 8**	24 (2JZ–GTE)	**R 9**	30
C13		28		26 (2JZ–GE)	**R10**	30
F 7		24 (2JZ–GTE)	**H10**	29		

: RELAY BLOCKS

CODE	SEE PAGE	RELAY BLOCKS (RELAY BLOCK LOCATION)
2	22	R/B NO. 2 (ENGINE COMPARTMENT LEFT)
4	23	R/B NO. 4 (LEFT KICK PANEL)

: JUNCTION BLOCK AND WIRE HARNESS CONNECTOR

CODE	SEE PAGE	JUNCTION BLOCK AND WIRE HARNESS (CONNECTOR LOCATION)
1A	20	ENGINE ROOM MAIN WIRE AND J/B NO. 1 (LEFT KICK PANEL)
1C	20	FLOOR NO. 2 WIRE AND J/B NO. 1 (LEFT KICK PANEL)
1E	20	INSTRUMENT PANEL WIRE AND J/B NO. 1 (LEFT KICK PANEL)
1H	20	COWL WIRE AND J/B NO. 1 (LEFT KICK PANEL)

: CONNECTOR JOINING WIRE HARNESS AND WIRE HARNESS

CODE	SEE PAGE	JOINING WIRE HARNESS AND WIRE HARNESS (CONNECTOR LOCATION)
IB1	36	ENGINE ROOM MAIN WIRE AND COWL WIRE (LEFT KICK PANEL)
IF1	36	INSTRUMENT PANEL WIRE AND COWL WIRE (INSTRUMENT PANEL REINFORCEMENT LH)

: GROUND POINTS

CODE	SEE PAGE	GROUND POINTS LOCATION
EA	32 (2JZ–GTE) 34 (2JZ–GE)	FRONT SIDE OF RIGHT FENDER
EB	32 (2JZ–GTE) 34 (2JZ–GE)	FRONT SIDE OF LEFT FENDER
IE	36	LEFT KICK PANEL
IH	36	RIGHT KICK PANEL
BI	40	LEFT QUARTER PILLAR
BJ	40	LOWER BACK PANEL CENTER

: SPLICE POINTS

CODE	SEE PAGE	WIRE HARNESS WITH SPLICE POINTS	CODE	SEE PAGE	WIRE HARNESS WITH SPLICE POINTS
E 2	32	ENGINE ROOM MAIN WIRE	**I 3**	38	INSTRUMENT PANEL WIRE
E18	34		**B 5**	40	FLOOR NO. 2 WIRE
I 2	38	COWL WIRE			

STOP LIGHT

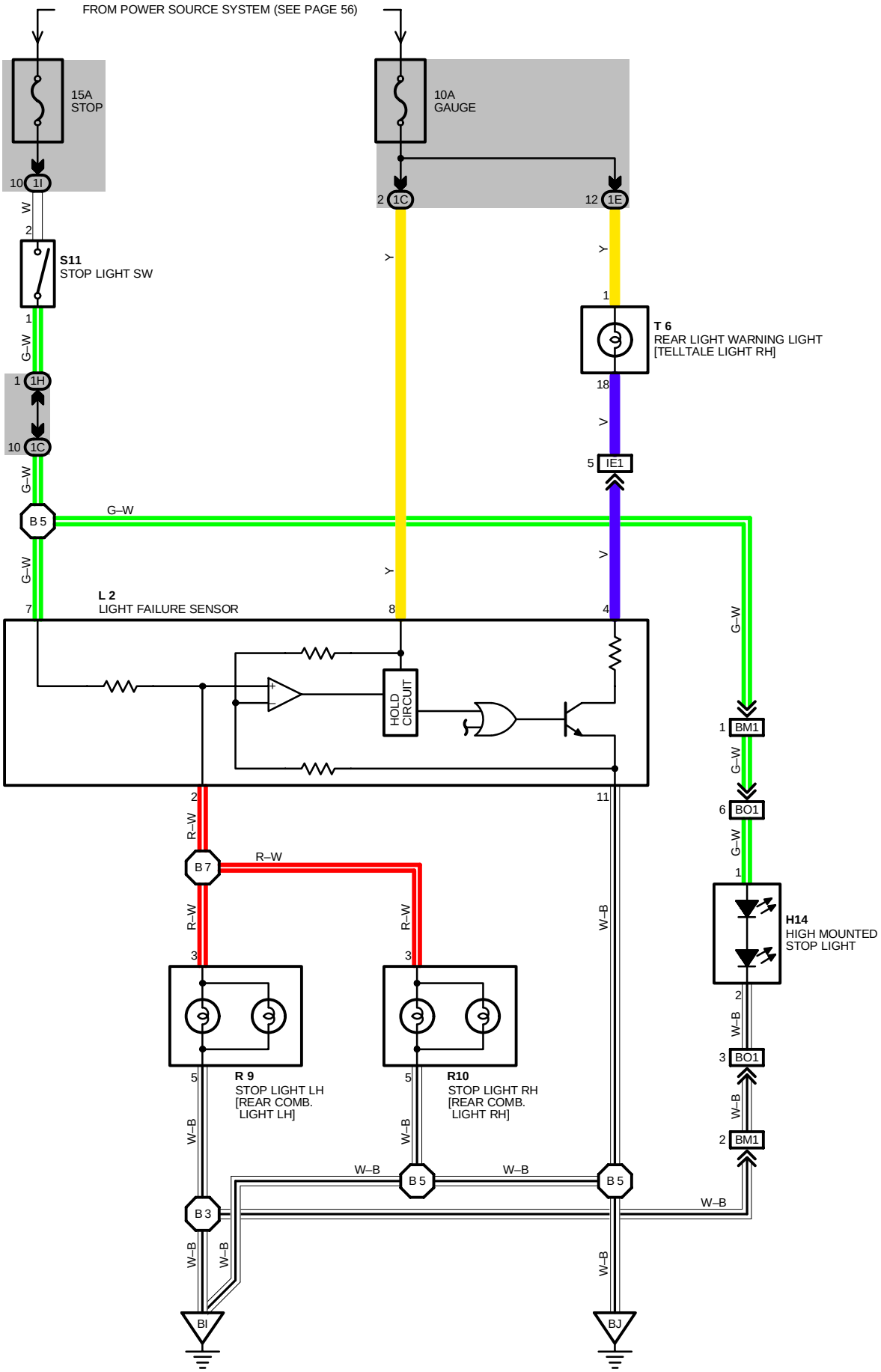
FROM POWER SOURCE SYSTEM (SEE PAGE 56)
15A
STOP
10A
GAUGE
10 1I
2 1C
12 1E
W
2
S11
STOP LIGHT SW
1
G–W
1 1H
10 1C
G–W
B 5
G–W
G–W
7
L 2
LIGHT FAILURE SENSOR
8
4
Y
Y
1
T 6
REAR LIGHT WARNING LIGHT
[TELLTALE LIGHT RH]
18
V
5 IE1
V
HOLD
CIRCUIT
G–W
1 BM1
G–W
6 BO1
G–W
1
H14
HIGH MOUNTED
STOP LIGHT
2
W–B
3 BO1
W–B
2 BM1
2
R–W
B 7
R–W
R–W
3
R–W
3
11
W–B
5
R 9
STOP LIGHT LH
[REAR COMB.
LIGHT LH]
5
R10
STOP LIGHT RH
[REAR COMB.
LIGHT RH]
W–B
W–B
W–B
B 5
B 5
W–B
B 3
W–B
W–B
W–B
BI
BJ

SYSTEM OUTLINE

CURRENT IS APPLIED AT ALL TIMES THROUGH THE **STOP** FUSE TO **TERMINAL 2** OF THE STOP LIGHT SW.

WHEN THE IGNITION SW IS TURNED ON, CURRENT FLOWS FROM THE **GAUGE** FUSE TO **TERMINAL 8** OF THE LIGHT FAILURE SENSOR, AND ALSO FLOWS THROUGH THE REAR LIGHT WARNING LIGHT TO **TERMINAL 4** OF THE LIGHT FAILURE SENSOR.

STOP LIGHT DISCONNECTION WARNING

WHEN THE IGNITION SW IS TURNED ON AND THE BRAKE PEDAL IS PRESSED (STOP LIGHT SW ON), IF THE STOP LIGHT CIRCUIT IS OPEN, THE CURRENT FLOWING FROM **TERMINAL 7** OF THE LIGHT FAILURE SENSOR TO **TERMINAL 2** CHANGES, SO THE LIGHT FAILURE SENSOR DETECTS THE DISCONNECTION AND THE WARNING CIRCUIT OF THE LIGHT FAILURE SENSOR IS ACTIVATED.

AS A RESULT, THE CURRENT FLOWS FROM **TERMINAL 4** OF THE LIGHT FAILURE SENSOR → **TERMINAL 11** → **GROUND** AND TURNS THE REAR LIGHT WARNING LIGHT ON. BY PRESSING THE BRAKE PEDAL, THE CURRENT FLOWING TO **TERMINAL 8** OF THE LIGHT FAILURE SENSOR KEEPS THE WARNING CIRCUIT ON HOLDING AND THE WARNING LIGHT ON UNTIL THE IGNITION SW IS TURNED OFF.

SERVICE HINTS

S11 STOP LIGHT SW
2–1 : CLOSED WITH BRAKE PEDAL DEPRESSED
L 2 LIGHT FAILURE SENSOR
2, 7–GROUND : APPROX. **12** VOLTS WITH STOP LIGHT SW ON
4, 8–GROUND : APPROX. **12** VOLTS WITH IGNITION SW AT **ON** POSITION
11–GROUND : ALWAYS CONTINUOUS

: PARTS LOCATION

CODE	SEE PAGE	CODE	SEE PAGE	CODE	SEE PAGE
H14	30	**R 9**	30	**S11**	29
L 2	30	**R10**	30	**T 6**	29

: JUNCTION BLOCK AND WIRE HARNESS CONNECTOR

CODE	SEE PAGE	JUNCTION BLOCK AND WIRE HARNESS (CONNECTOR LOCATION)
1C	20	FLOOR NO. 2 WIRE AND J/B NO. 1 (LEFT KICK PANEL)
1E	20	INSTRUMENT PANEL WIRE AND J/B NO. 1 (LEFT KICK PANEL)
1H	20	COWL WIRE AND J/B NO. 1 (LEFT KICK PANEL)
1I		

: CONNECTOR JOINING WIRE HARNESS AND WIRE HARNESS

CODE	SEE PAGE	JOINING WIRE HARNESS AND WIRE HARNESS (CONNECTOR LOCATION)
IE1	36	INSTRUMENT PANEL WIRE AND FLOOR NO. 2 WIRE (LEFT KICK PANEL)
BM1	40	BACK DOOR NO. 1 WIRE AND FLOOR NO. 2 WIRE (LEFT SIDE OF PACKAGE TRAY TRIM)
B01	40	BACK DOOR NO. 2 WIRE AND BACK DOOR NO. 1 WIRE (BACK DOOR UPPER LEFT)

: GROUND POINTS

CODE	SEE PAGE	GROUND POINTS LOCATION
BI	40	LEFT QUARTER PILLAR
BJ	40	LOWER BACK PANEL CENTER

: SPLICE POINTS

CODE	SEE PAGE	WIRE HARNESS WITH SPLICE POINTS	CODE	SEE PAGE	WIRE HARNESS WITH SPLICE POINTS
B 3	40	FLOOR NO. 2 WIRE	**B 7**	40	FLOOR NO. 2 WIRE
B 5					

H14



L 2

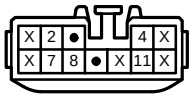

R 9

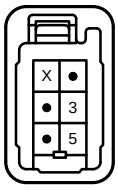

R10

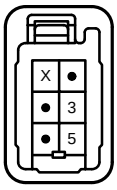

S11 BLUE

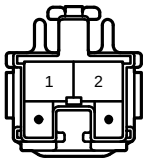

T 6

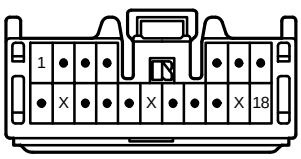

BACK–UP LIGHT

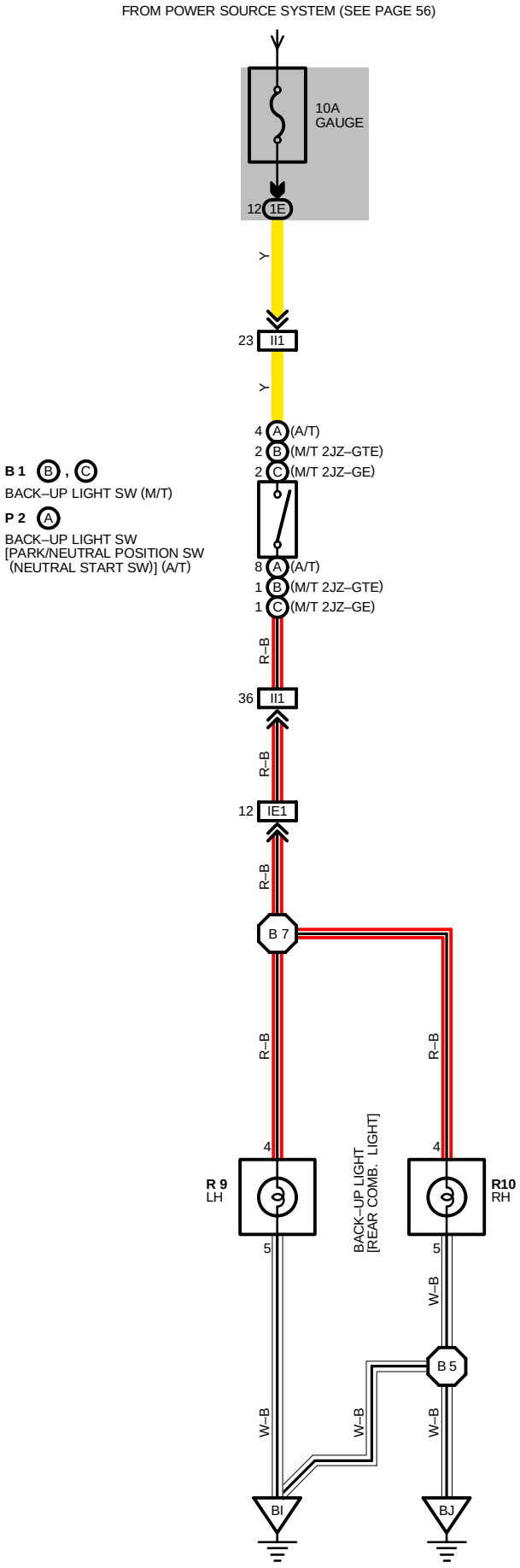

SERVICE HINTS

B 1 (B), (C) BACK–UP LIGHT SW (M/T)
P 2 (A) BACK–UP LIGHT SW [PARK/NEUTRAL POSITION SW (NEUTRAL START SW)] (A/T)
(B), **(C)** 2–1, **(A)** 4–8 : CLOSED WITH SHIFT LEVER IN **R** POSITION

: PARTS LOCATION

CODE		SEE PAGE	CODE		SEE PAGE	CODE	SEE PAGE
B 1	B	24 (2JZ–GTE)	**P 2**	A	25 (2JZ–GTE)	**R 9**	30
	C	26 (2JZ–GE)			27 (2JZ–GE)	**R10**	30

: JUNCTION BLOCK AND WIRE HARNESS CONNECTOR

CODE	SEE PAGE	JUNCTION BLOCK AND WIRE HARNESS (CONNECTOR LOCATION)
1E	20	INSTRUMENT PANEL WIRE AND J/B NO. 1 (LEFT KICK PANEL)

: CONNECTOR JOINING WIRE HARNESS AND WIRE HARNESS

CODE	SEE PAGE	JOINING WIRE HARNESS AND WIRE HARNESS (CONNECTOR LOCATION)
IE1	36	INSTRUMENT PANEL WIRE AND FLOOR NO. 2 WIRE (LEFT KICK PANEL)
II1	38	ENGINE WIRE AND INSTRUMENT PANEL WIRE (RIGHT KICK PANEL)

: GROUND POINTS

CODE	SEE PAGE	GROUND POINTS LOCATION
BI	40	LEFT QUARTER PILLAR
BJ	40	LOWER BACK PANEL CENTER

: SPLICE POINTS

CODE	SEE PAGE	WIRE HARNESS WITH SPLICE POINTS	CODE	SEE PAGE	WIRE HARNESS WITH SPLICE POINTS
B 5	40	FLOOR NO. 2 WIRE	**B 7**	40	FLOOR NO. 2 WIRE

B 1 (B) GRAY

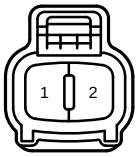

B 1 (C) GRAY



P 2 (A) GRAY

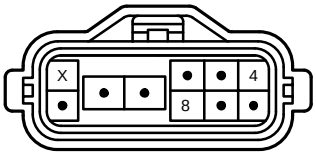

R 9

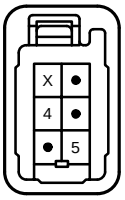

R10

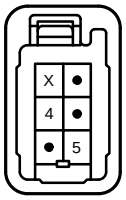

INTERIOR LIGHT

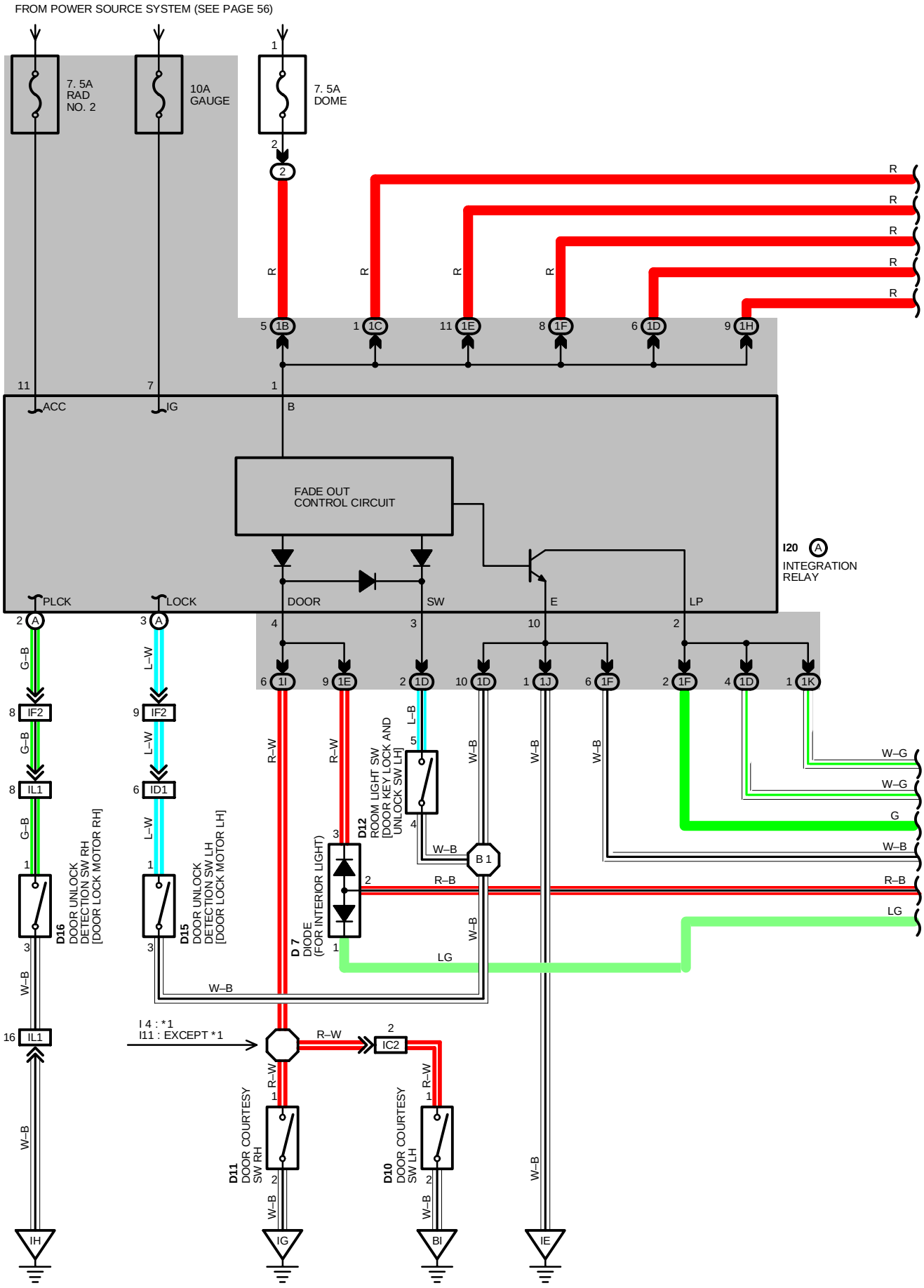

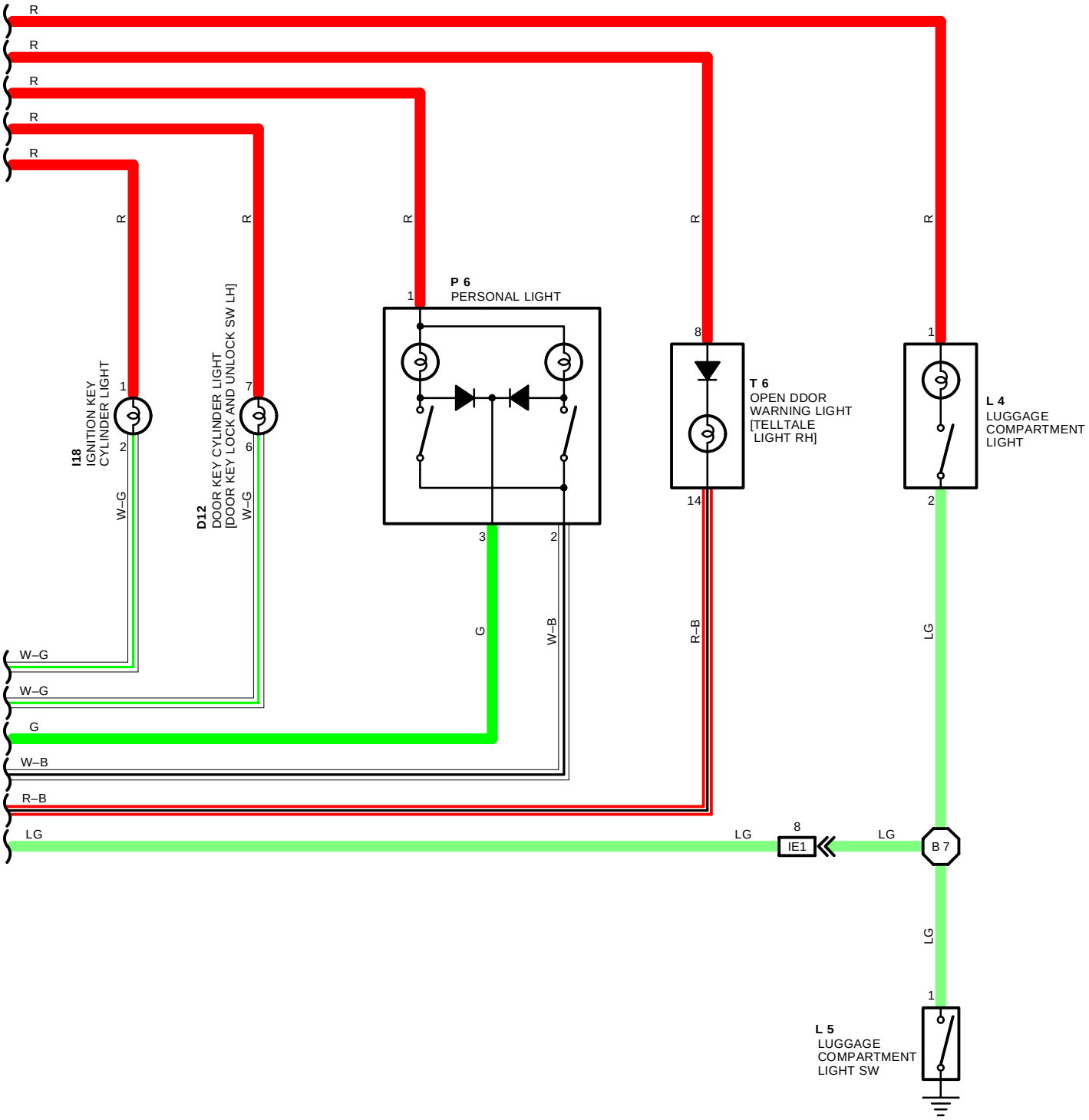
R
R
R
R
R
R
R
R
R
R
I18
IGNITION KEY
CYLINDER LIGHT
1
2
W–G
D12
DOOR KEY CYLINDER LIGHT
[DOOR KEY LOCK AND UNLOCK SW LH]
7
6
W–G
P 6
PERSONAL LIGHT
1
3
2
G
W–B
T 6
OPEN DDOR
WARNING LIGHT
[TELLTALE
LIGHT RH]
8
14
R–B
L 4
LUGGAGE
COMPARTMENT
LIGHT
1
2
LG
W–G
W–G
G
W–B
R–B
LG
LG
8
IE1
LG
B 7
LG
1
L 5
LUGGAGE
COMPARTMENT
LIGHT SW

INTERIOR LIGHT

SERVICE HINTS

INTEGRATION RELAY (J/B NO.1)
1–GROUND : ALWAYS APPROX. **12** VOLTS
4–GROUND : CONTINUOUS WITH RH DOOR OPEN OR LH DOOR OPEN

D10, D11 DOOR COURTESY SW LH, RH
1–2 : CLOSED WITH DOOR OPEN

L 5 LUGGAGE COMPARTMENT LIGHT SW
1–GROUND : CLOSED WITH LUGGAGE COMPARTMENT DOOR OPEN

: PARTS LOCATION

CODE	SEE PAGE	CODE	SEE PAGE	CODE	SEE PAGE
D 7	28	**D15**	30	**L 4**	30
D10	30	**D16**	30	**L 5**	30
D11	30	**I18**	29	**P 6**	30
D12	30	**I20** A	29	**T 6**	29

: RELAY BLOCKS

CODE	SEE PAGE	RELAY BLOCKS (RELAY BLOCK LOCATION)
2	22	R/B NO. 2 (ENGINE COMPARTMENT LEFT)

: JUNCTION BLOCK AND WIRE HARNESS CONNECTOR

CODE	SEE PAGE	JUNCTION BLOCK AND WIRE HARNESS (CONNECTOR LOCATION)
1B	20	ENGINE ROOM MAIN WIRE AND J/B NO. 1 (LEFT KICK PANEL)
1C	20	FLOOR NO. 2 WIRE AND J/B NO. 1 (LEFT KICK PANEL)
1D	20	FRONT DOOR LH WIRE AND J/B NO. 1 (LEFT KICK PANEL)
1E	20	INSTRUMENT PANEL WIRE AND J/B NO. 1 (LEFT KICK PANEL)
1F	20	ROOF WIRE AND J/B NO. 1 (LEFT KICK PANEL)
1H	20	COWL WIRE AND J/B NO. 1 (LEFT KICK LEFT)
1I		
1J		
1K		

: CONNECTOR JOINING WIRE HARNESS AND WIRE HARNESS

CODE	SEE PAGE	JOINING WIRE HARNESS AND WIRE HARNESS (CONNECTOR LOCATION)
IC2	36	FLOOR NO. 2 WIRE AND COWL WIRE (LEFT KICK PANEL)
ID1	36	FRONT DOOR LH WIRE AND INSTRUMENT PANEL WIRE (LEFT KICK PANEL)
IE1	36	INSTRUMENT PANEL WIRE AND FLOOR NO. 2 WIRE (LEFT KICK PANEL)
IF2	36	INSTRUMENT PANEL WIRE AND COWL WIRE (INSTRUMENT PANEL REINFORCEMENT LH)
IL1	38	FRONT DOOR RH WIRE AND INSTRUMENT PANEL WIRE (RIGHT KICK PANEL)

: GROUND POINTS

CODE	SEE PAGE	GROUND POINTS LOCATION
IE	36	LEFT KICK PANEL
IG	36	RIGHT KICK PANEL
IH		
BI	40	LEFT QUARTER PILLAR

: SPLICE POINTS

CODE	SEE PAGE	WIRE HARNESS WITH SPLICE POINTS	CODE	SEE PAGE	WIRE HARNESS WITH SPLICE POINTS
I 4	38	COWL WIRE	**B 1**	40	FRONT DOOR LH WIRE
I11			**B 7**	40	FLOOR NO. 2 WIRE

D 7



D10

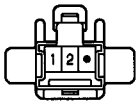

D11

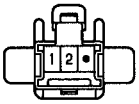

D12



D15 GRAY



D16 GRAY



I18 BLUE



I20 (A)

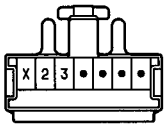

L 4



L 5 GRAY



P 6

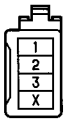

T 6

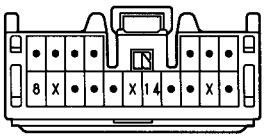

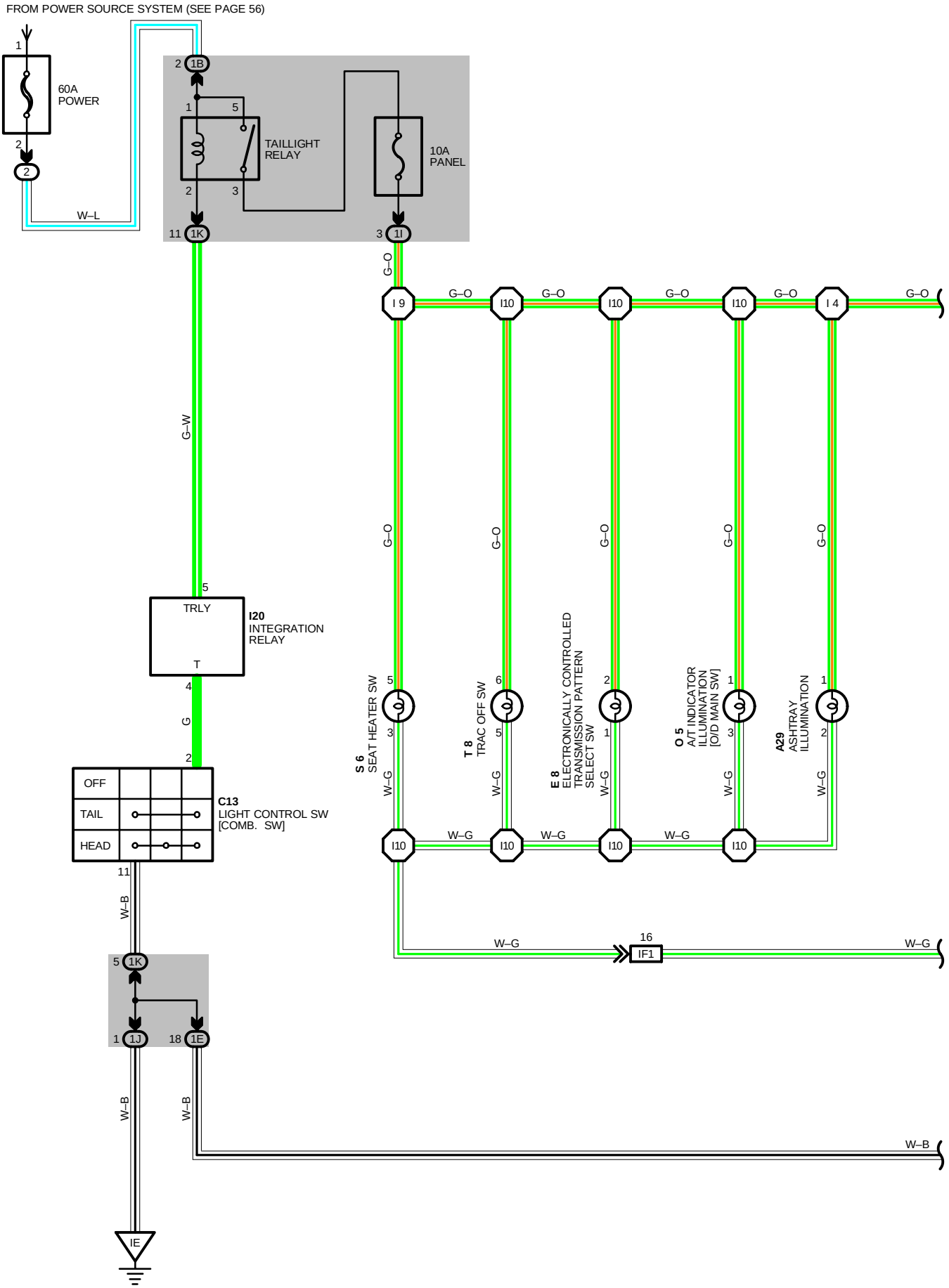
FROM POWER SOURCE SYSTEM (SEE PAGE 56)
60A POWER
TAILLIGHT RELAY
10A PANEL
W–L
G–W
G–O
TRLY
I20 INTEGRATION RELAY
G
C13 LIGHT CONTROL SW [COMB. SW]
OFF
TAIL
HEAD
W–B
S 6 SEAT HEATER SW
T 8 TRAC OFF SW
E 8 ELECTRONICALLY CONTROLLED TRANSMISSION PATTERN SELECT SW
O 5 A/T INDICATOR ILLUMINATION [O/D MAIN SW]
A29 ASHTRAY ILLUMINATION
W–G
IF1
IE

*1 : W/ STEREO POWER AMPLIFIER
*2 : W/O STEREO POWER AMPLIFIER

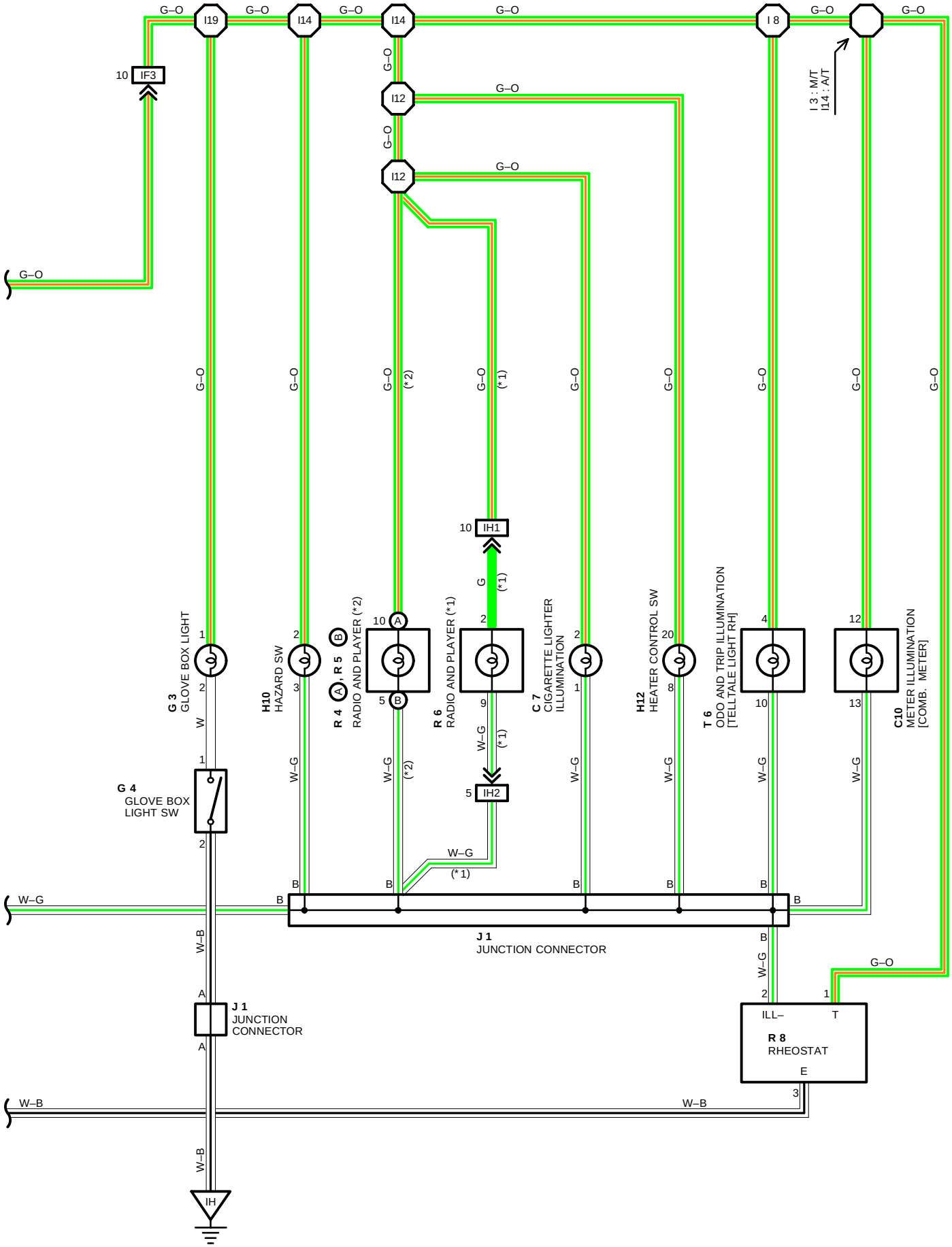

ILLUMINATION

SERVICE HINTS

TAILLIGHT RELAY

5–3 : CLOSED WITH LIGHT CONTROL SW AT **TAIL** OR **HEAD** POSITION

C13 LIGHT CONTROL SW [COMB. SW]

2–11 : CLOSED WITH LIGHT CONTROL SW AT **TAIL** OR **HEAD** POSITION

: PARTS LOCATION

CODE	SEE PAGE	CODE		SEE PAGE	CODE	SEE PAGE
A29	28	**H10**		29	**R 6**	29
C 7	28	**H12**		29	**R 8**	29
C10	28	**I20**		29	**S 6**	29
C13	28	**J 1**		29	**T 6**	29
E 8	29	**O 5**		29	**T 8**	29
G 3	29	**R 4**	A	29		
G 4	29	**R 5**	B	29		

: RELAY BLOCKS

CODE	SEE PAGE	RELAY BLOCKS (RELAY BLOCK LOCATION)
2	22	R/B NO. 2 (ENGINE COMPARTMENT LEFT)

: JUNCTION BLOCK AND WIRE HARNESS CONNECTOR

CODE	SEE PAGE	JUNCTION BLOCK AND WIRE HARNESS (CONNECTOR LOCATION)
1B	20	ENGINE ROOM MAIN WIRE AND J/B NO. 1 (LEFT KICK PANEL)
1E	20	INSTRUMENT PANEL WIRE AND J/B NO. 1 (LEFT KICK PANEL)
1I	20	COWL WIRE AND J/B NO. 1 (LEFT KICK PANEL)
1J		
1K		

: CONNECTOR JOINING WIRE HARNESS AND WIRE HARNESS

CODE	SEE PAGE	JOINING WIRE HARNESS AND WIRE HARNESS (CONNECTOR LOCATION)
IF1	36	INSTRUMENT PANEL WIRE AND COWL WIRE (INSTRUMENT PANEL REINFORCEMENT LH)
IF3	36	INSTRUMENT PANEL WIRE AND COWL WIRE (RIGHT KICK PANEL)
IH1		INSTRUMENT PANEL WIRE AND CONSOLE BOX WIRE (UNDER THE INSTRUMENT PANEL BRACE RH)
IH2	38	

: GROUND POINTS

CODE	SEE PAGE	GROUND POINTS LOCATION
IE	36	LEFT KICK PANEL
IH	36	RIGHT KICK PANEL

: SPLICE POINTS

CODE	SEE PAGE	WIRE HARNESS WITH SPLICE POINTS	CODE	SEE PAGE	WIRE HARNESS WITH SPLICE POINTS
I 3	38	INSTRUMENT PANEL WIRE	**I10**	38	COWL WIRE
I 4	38	COWL WIRE	**I12**	38	INSTRUMENT PANEL WIRE
I 8	38	INSTRUMENT PANEL WIRE	**I14**		
I 9	38	COWL WIRE	**I19**		

A29

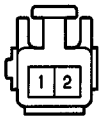

C 7 GRAY



C10 BLUE

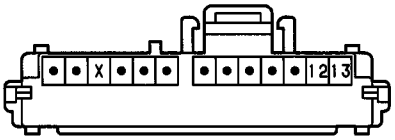

C13 BLACK

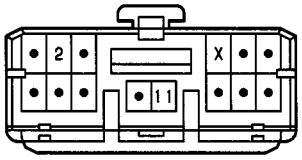

E 8

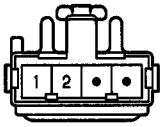

G 3 BLACK



G 4 BLACK



H10 BLACK

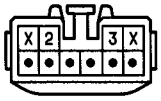

H12 ORANGE

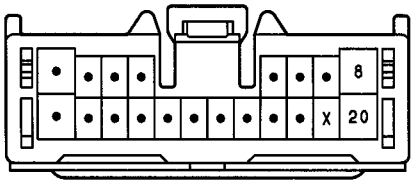

I20

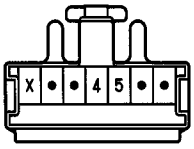

J 1

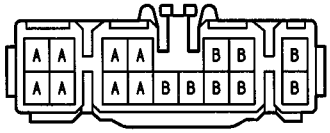

(HINT:SEE PAGE 7)

O 5 BLUE

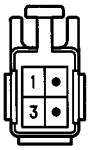

R 4 Ⓐ

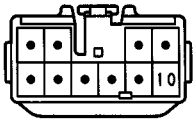

R 5 Ⓑ

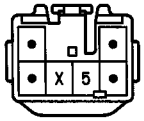

R 6

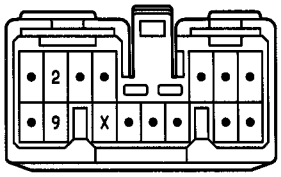

R 8 BLUE

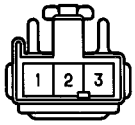

S 6 BLACK

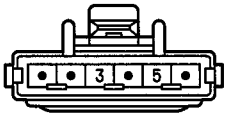

T 6

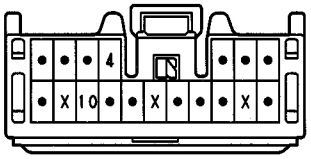

T 8 BLACK

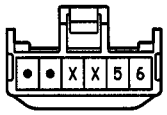

FRONT WIPER AND WASHER

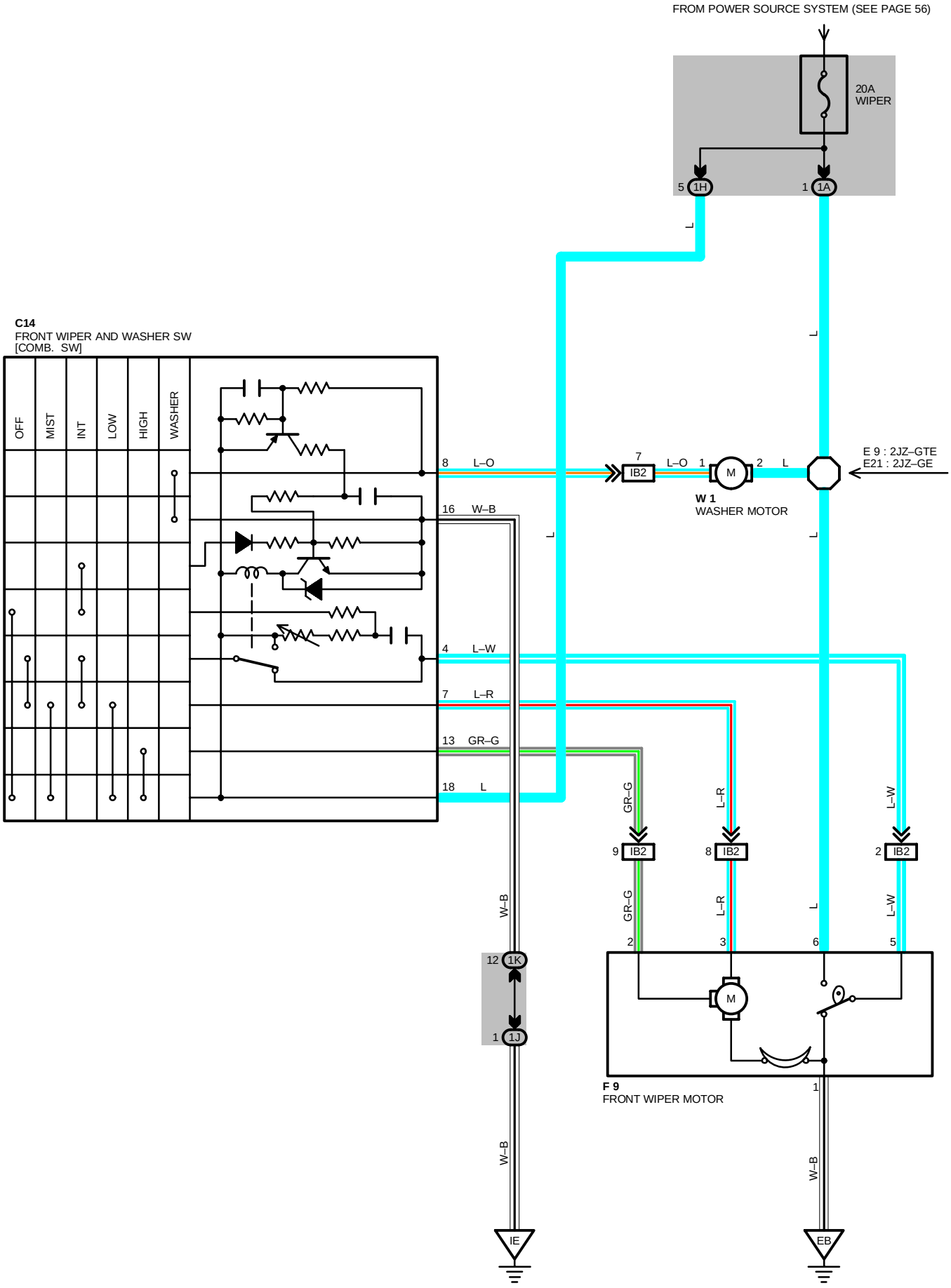

SYSTEM OUTLINE

WITH THE IGNITION SW TURNED ON, THE CURRENT FLOWS TO **TERMINAL 18** OF THE WIPER AND WASHER SW, **TERMINAL 2** OF THE WASHER MOTOR AND **TERMINAL 6** OF THE FRONT WIPER MOTOR THROUGH THE **WIPER** FUSE.

1. LOW SPEED POSITION

WITH WIPER SW TURNED TO **LOW** POSITION, THE CURRENT FLOWS FROM **TERMINAL 18** OF THE WIPER AND WASHER SW → **TERMINAL 7** → **TERMINAL 3** OF THE FRONT WIPER MOTOR → **TERMINAL 1** → TO **GROUND** AND CAUSES TO THE WIPER MOTOR TO RUN AT LOW SPEED.

2. HIGH SPEED POSITION

WITH WIPER SW TURNED TO **HIGH** POSITION, THE CURRENT FLOWS FROM **TERMINAL 18** OF THE WIPER AND WASHER SW → **TERMINAL 13** → **TERMINAL 2** OF THE FRONT WIPER MOTOR → **TERMINAL 1** → TO **GROUND** AND CAUSES TO THE WIPER MOTOR TO RUN AT HIGH SPEED.

3. INT POSITION

WITH WIPER SW TURNED TO **INT** POSITION, THE RELAY OPERATES AND THE CURRENT WHICH IS CONNECTED BY RELAY FUNCTION FLOWS FROM **TERMINAL 18** OF THE WIPER AND WASHER SW → **TERMINAL 16** → TO **GROUND**. THIS FLOWS OF CURRENT OPERATES THE INTERMITTENT CIRCUIT AND THE CURRENT FLOWS FROM **TERMINAL 18** OF THE WIPER AND WASHER SW → **TERMINAL 7** → **TERMINAL 3** OF THE FRONT WIPER MOTOR → **TERMINAL 1** → TO **GROUND** AND FUNCTIONS.

THE INTERMITTENT OPERATION IS CONTROLLED BY A CONDENSER'S CHARGED AND DISCHARGED FUNCTION INSTALLED IN RELAY AND INTERMITTENT TIME IS CONTROLLED BY A TIME CONTROL SW TO CHARGE THE CHARGING TIME OF THE CONDENSER.

4. MIST POSITION

WITH WIPER SW TURNED TO **MIST** POSITION, THE CURRENT FLOWS FROM **TERMINAL 18** OF THE WIPER AND WASHER SW → **TERMINAL 7** → **TERMINAL 3** OF THE FRONT WIPER MOTOR → **TERMINAL 1** → TO **GROUND** AND CAUSES THE WIPER MOTOR TO RUN AT LOW SPEED.

5. WASHER CONTINUOUS OPERATION

WITH WASHER SW TURNED TO ON, THE CURRENT FLOWS FROM **TERMINAL 2** OF THE WAHSER MOTOR → **TERMINAL 1** → **TERMINAL 8** OF THE WIPER AND WASHER SW → **TERMINAL 16** → TO **GROUND** AND CAUSES TO THE WASHER MOTOR TO RUN, AND WINDOW WASHER IS JET. THIS CAUSES THE CURRENT TO FLOW WASHER CONTINUOUS OPERATION CIRCUIT IN **TERMINAL 18** OF THE WIPER AND WASHER SW → **TERMINAL 7** → **TERMINAL 3** OF THE FRONT WIPER MOTOR → **TERMINAL 1** → TO **GROUND** AND FUNCTION.

SYSTEM OUTLINE

C14 FRONT WIPER AND WASHER SW (COMB. SW)

16–GROUND : ALWAYS CONTINUOUS
18–GROUND : APPROX. **12** VOLTS WITH IGNITION SW AT **ON** POSITION
7–GROUND : APPROX. **12** VOLTS WITH WIPER AND WASHER SW AT **LOW** POSITION
APPROX. **12** VOLTS EVERY APPROX. **1** TO **10** SECONDS INTERMITTENTLY WITH WIPER SW AT **INT** POSITION
4–GROUND : APPROX. **12** VOLTS WITH IGNITION SW ON UNLESS WIPER MOTOR AT **STOP** POSITION
13–GROUND : APPROX. **12** VOLTS WITH IGNITION SW ON AND WIPER AND WASHER SW AT **HIGH** POSITION

F 9 FRONT WIPER MOTOR

5–6 : CLOSED UNLESS WIPER MOTOR AT **STOP** POSITION

○ : PARTS LOCATION

CODE	SEE PAGE	CODE	SEE PAGE	CODE	SEE PAGE
C14	28	**F 9**	26 (2JZ–GE)	**W 1**	27 (2JZ–GE)
F 9	24 (2JZ–GTE)	**W 1**	25 (2JZ–GTE)		

⬭ : JUNCTION BLOCK AND WIRE HARNESS CONNECTOR

CODE	SEE PAGE	JUNCTION BLOCK AND WIRE HARNESS (CONNECTOR LOCATION)
1A	20	ENGINE ROOM MAIN WIRE AND J/B NO. 1 (LEFT KICK PANEL)
1H	20	COWL WIRE AND J/B NO. 1 (LEFT KICK PANEL)
1J		
1K		

▭ : CONNECTOR JOINING WIRE HARNESS AND WIRE HARNESS

CODE	SEE PAGE	JOINING WIRE HARNESS AND WIRE HARNESS (CONNECTOR LOCATION)
IB2	36	ENGINE ROOM MAIN WIRE AND COWL WIRE (LEFT KICK PANEL)

FRONT WIPER AND WASHER

: GROUND POINTS

CODE	SEE PAGE	GROUND POINTS LOCATION
EB	32 (2JZ–GTE)	FRONT SIDE OF LEFT FENDER
	34 (2JZ–GE)	
IE	36	LEFT KICK PANEL

: SPLICE POINTS

CODE	SEE PAGE	WIRE HARNESS WITH SPLICE POINTS	CODE	SEE PAGE	WIRE HARNESS WITH SPLICE POINTS
E 9	32	ENGINE ROOM MAIN WIRE	**E21**	34	ENGINE ROOM MAIN WIRE

C14 BLACK

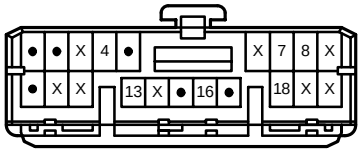

F 9 BLACK



W 1 BLACK

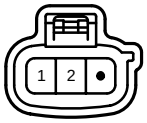

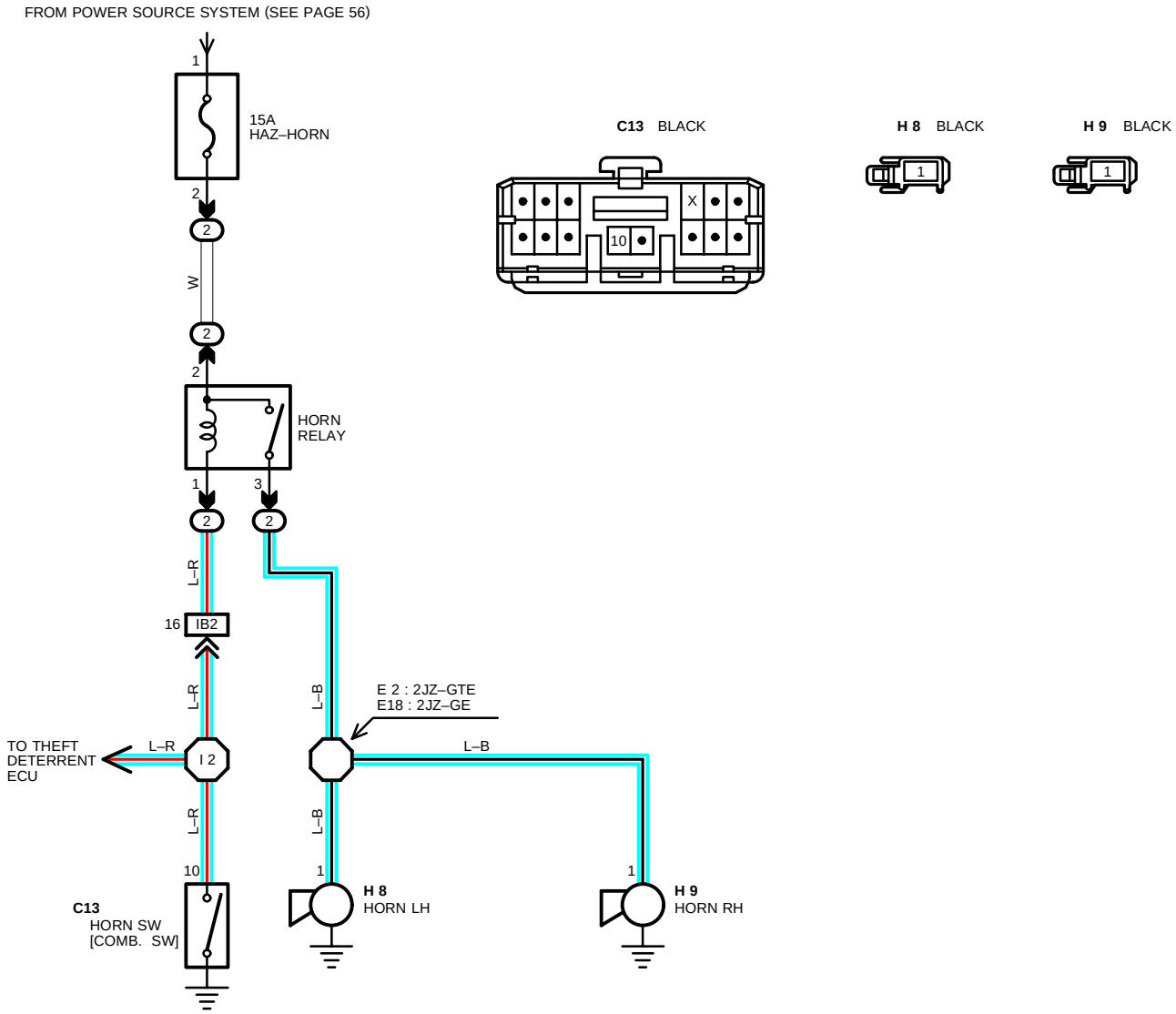

SERVICE HINTS

HORN RELAY

(2) 2–**(2)** 3 : CLOSED WITH HORN SW ON

: PARTS LOCATION

CODE	SEE PAGE	CODE	SEE PAGE	CODE	SEE PAGE
C13	28	**H 8**	27 (2JZ–GE)	**H 9**	27 (2JZ–GE)
H 8	24 (2JZ–GTE)	**H 9**	24 (2JZ–GTE)		

: RELAY BLOCKS

CODE	SEE PAGE	RELAY BLOCKS (RELAY BLOCK LOCATION)
2	22	R/B NO. 2 (ENGINE COMPARTMENT LEFT)

: CONNECTOR JOINING WIRE HARNESS AND WIRE HARNESS

CODE	SEE PAGE	JOINING WIRE HARNESS AND WIRE HARNESS (CONNECTOR LOCATION)
IB2	36	ENGINE ROOM MAIN WIRE AND COWL WIRE (LEFT KICK PANEL)

: SPLICE POINTS

CODE	SEE PAGE	WIRE HARNESS WITH SPLICE POINTS	CODE	SEE PAGE	WIRE HARNESS WITH SPLICE POINTS
E 2	32	ENGINE ROOM MAIN WIRE	**I 2**	38	COWL WIRE
E18	34				

THEFT DETERRENT AND DOOR LOCK CONTROL

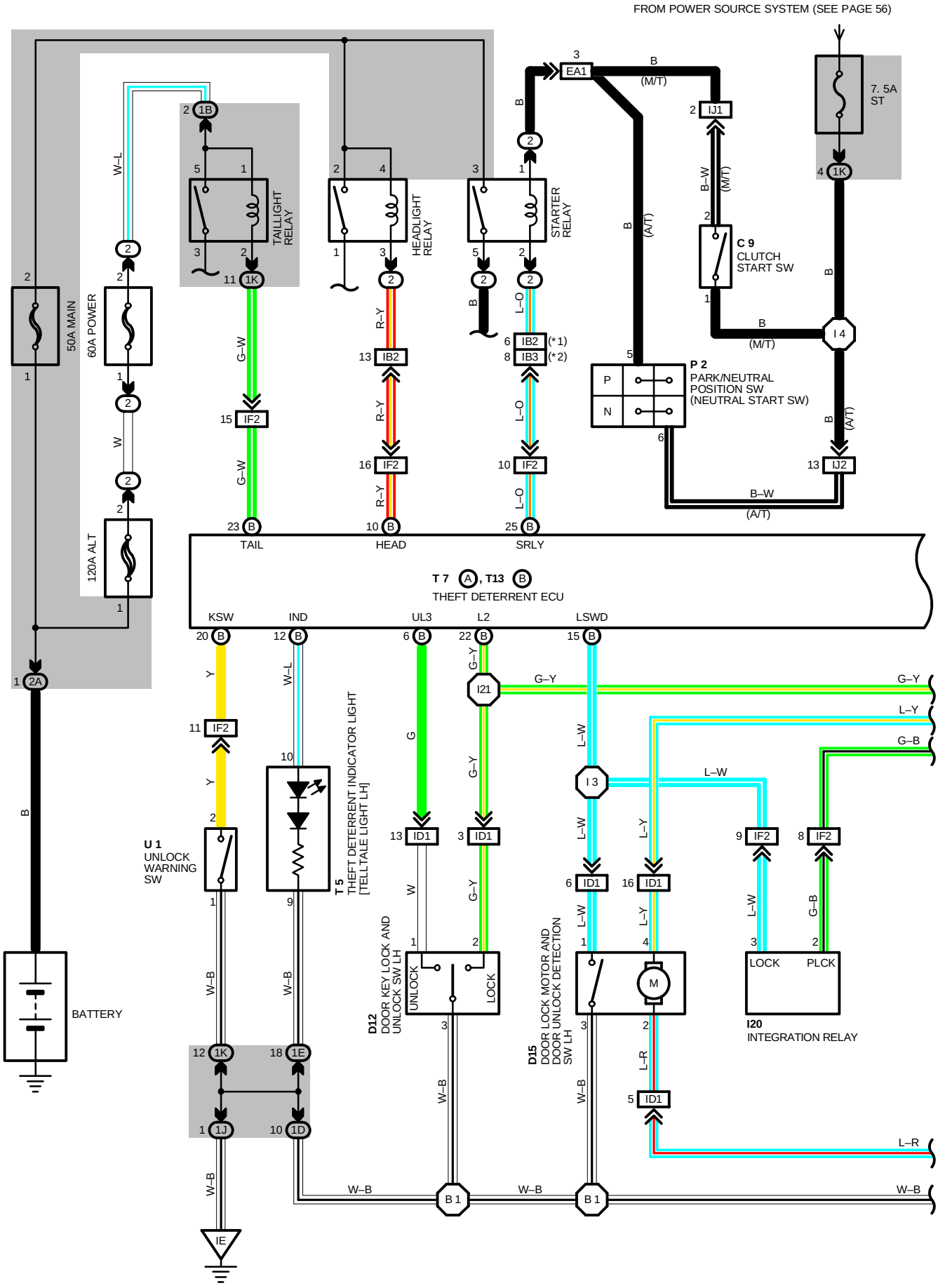

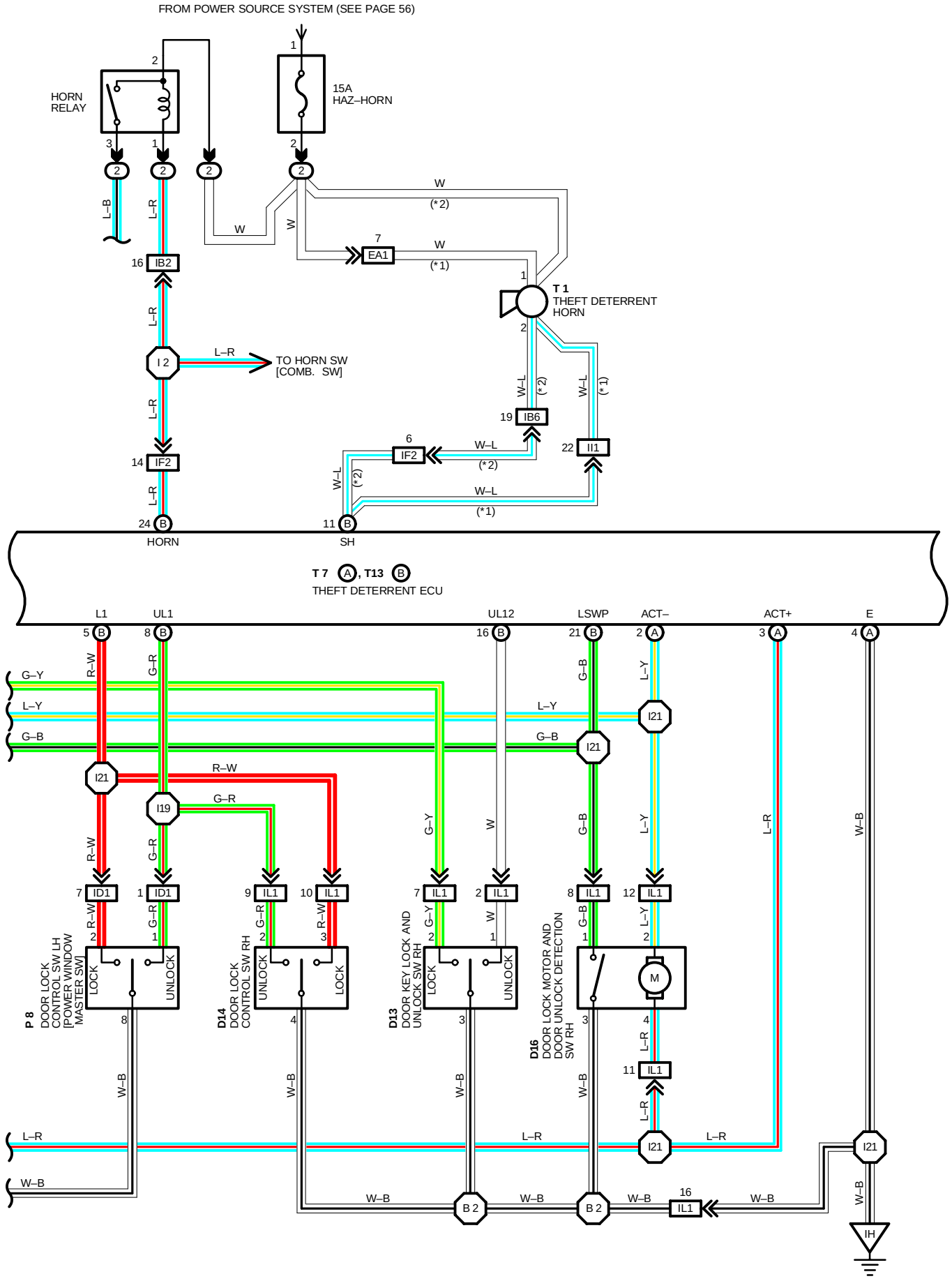
FROM POWER SOURCE SYSTEM (SEE PAGE 56)
HORN RELAY
15A HAZ–HORN
TO HORN SW [COMB. SW]
T 1 THEFT DETERRENT HORN
HORN
SH
T 7 A, T13 B THEFT DETERRENT ECU
L1
UL1
UL12
LSWP
ACT–
ACT+
E
P 8 DOOR LOCK CONTROL SW LH [POWER WINDOW MASTER SW]
D14 DOOR LOCK CONTROL SW RH
D13 DOOR KEY LOCK AND UNLOCK SW RH
D16 DOOR LOCK MOTOR AND DOOR UNLOCK DETECTION SW RH
LOCK
UNLOCK
M
IH

THEFT DETERRENT AND DOOR LOCK CONTROL

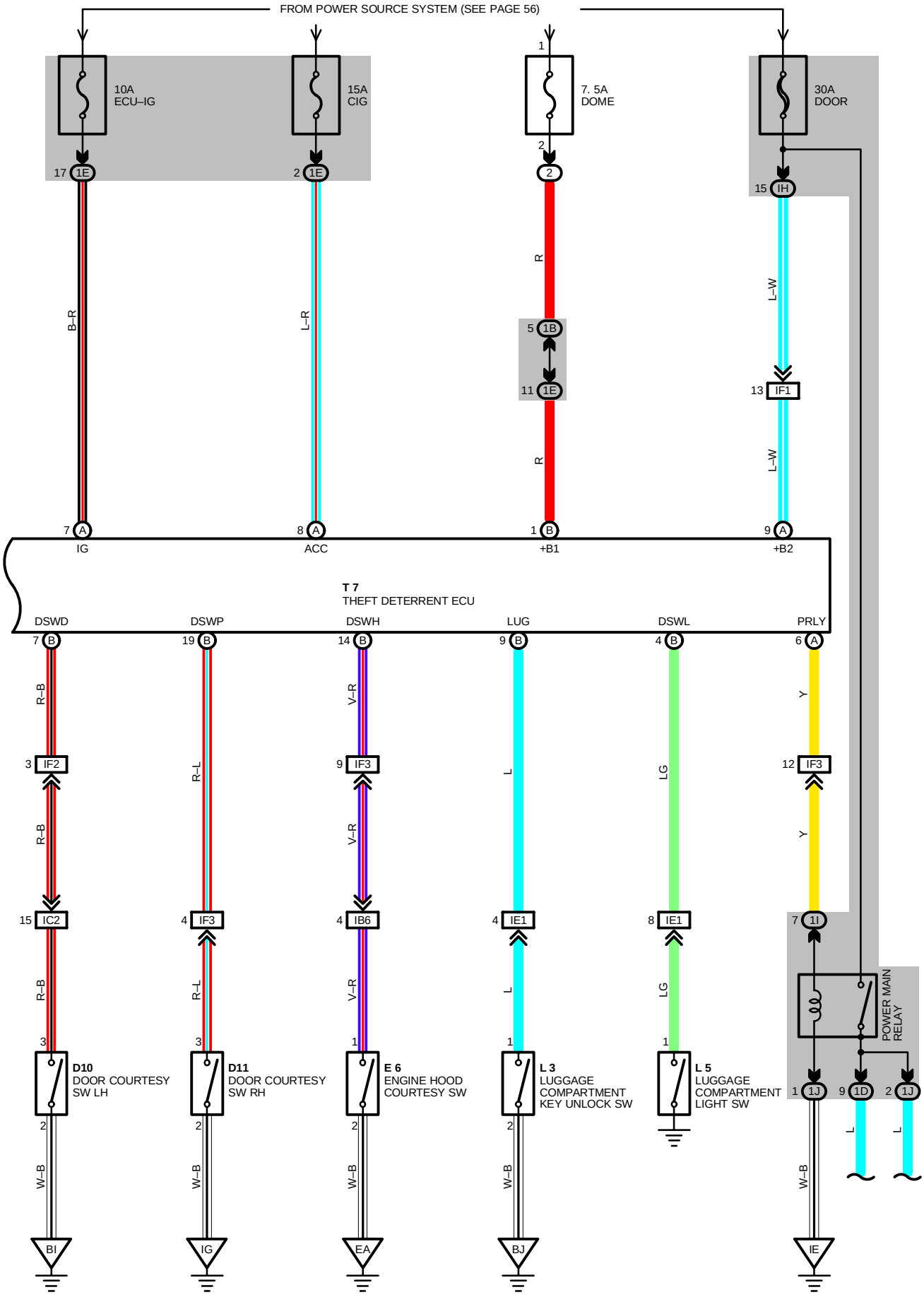

SYSTEM OUTLINE

CURRENT ALWAYS FLOWS TO **TERMINAL (A)9** OF THE THEFT DETERRENT ECU THROUGH THE **DOOR** FUSE, AND TO **TERMINAL (B)1** THROUGH THE **DOME** FUSE.

WHEN THE IGNITION SW TURNED ON, THE CURRENT FLOWING THROUGH THE **ECU–IG** FUSE → **TERMINAL (A)7** OF THE ECU → **TERMINAL (A)6** FLOWS THROUGH THE COIL SIDE OF THE POWER MAIN RELAY TO **GROUND,** CAUSING THE RELAY TO OPERATE. THE CURRENT FLOWING THROUGH THE **DOOR** FUSE FLOWS TO THE DOOR LOCK CONTROL SWITCHES, CAUSING THE INDICATOR LIGHT TO LIGHT UP.

1. MANUAL LOCK OPERATION

WHEN THE DOOR CONTROL SW OR KEY SW ARE PUSHED TO **LOCK** POSITION, A LOCK SIGNAL IS INPUT TO **TERMINAL (B)5, (B)22** (FOR KEY SW) OF THE THEFT DETERRENT ECU AND CAUSES THE ECU TO FUNCTION. CURRENT FLOWS FROM **TERMINAL (A)9** OF THE ECU → **TERMINAL (A)3** → **TERMINAL 2** (LH), **TERMINAL 4** (RH) OF THE DOOR LOCK MOTORS → **TERMINAL 4** (LH), **TERMINAL 2** (RH) → **TERMINAL (A)2** OF THE ECU → **TERMINAL (A)4** → **GROUND** AND THE DOOR LOCK MOTOR CAUSES THE DOOR TO LOCK.

2. MANUAL UNLOCK OPERATION

WHEN THE DOOR LOCK CONTROL SW OR KEY SW ARE PUSHED TO **UNLOCK** POSITION, AN UNLOCK SIGNAL IS INPUT TO **TERMINAL (A)8, (B)6** (FOR KEY SW LH) OR **(B)16** (FOR KEY SW RH) OF THE THEFT DETERRENT ECU AND CAUSES TO FUNCTION. CURRENT FLOWS FROM **TERMINAL (A)9** OF THE ECU → **TERMINAL (A)2** → **TERMINAL 4** (LH), **TERMINAL 2** (RH) OF THE DOOR LOCK MOTORS → **TERMINAL 2** (LH), **TERMINAL 4** (RH) → **TERMINAL (A)3** OF THE ECU → **TERMINAL (A)4** → **GROUND** AND THE DOOR LOCK MOTOR CAUSES THE DOOR TO UNLOCK.

WHEN UNLOCK OPERATION OCCURS USING THE LH DOOR KEY SW, DOING THE UNLOCK OPERATION ONCE UNLOCKS ONLY THE DRIVER'S DOOR. TO UNLOCK ALL THE OTHER DOORS TOGETHER, UNLOCK OPERATION MUST BE DONE AGAIN WITHIN **3** SECONDS OF THE FIRST OPERATION.

3. IGNITION KEY REMINDER OPERATION

∗ OPERATION OF DOOR LOCK BUTTON (OPERATION OF DOOR LOCK MOTORS)

WHEN THE IGNITION KEY IS IN THE CYLINDER (UNLOCK WARNING SW ON) AND THE DOOR IS OPENED AND LOCKED USING DOOR LOCK BUTTON (DOOR LOCK MOTOR), THE DOOR IS LOCKED ONCE BUT EACH DOOR IS UNLOCKED SOON BY THE OPERATION OF THE ECU. AS A RESULT OF ECU ACTIVATION, THE CURRENT FLOWS FROM **TERMINAL (A)9** OF THE ECU → **TERMINAL (A)2** → **TERMINAL 4** (LH), **TERMINAL 2** (RH) OF THE DOOR LOCK MOTORS → **TERMINAL 2** (LH), **TERMINAL 4** (RH) → **TERMINAL (A)3** OF THE ECU → **TERMINAL (A)4** → **GROUND** AND CAUSES ALL THE DOOR LOCK CONTROL SW AND DOOR LOCK KEY SW.

∗ KEY LESS LOCK OPERATION

WHEN THE IGNITION KEY IS STILL INSERTED IN THE CYLINDER (UNLOCK WARNING SW ON), THE DOOR IS OPEN AND UNLOCK OPERATION IS PREVENTED BY KEEPING THE DOOR LOCK BUTTON PRESSED TO THE LOCK SIDE, THE DOOR IS KEPT IN THE LOCK CONDITION. IF THE DOOR IS THEN CLOSED, A SIGNAL IS INPUT TO THE ECU FROM THE DOOR COURTESY SW. THIS ACTIVATES THE ECU AND EACH DOOR IS UNLOCKED.

THEFT DETERRENT AND DOOR LOCK CONTROL

SERVICE HINTS

D10, D11 DOOR COURTESY SW LH, RH
3–2 : CLOSED WITH DOOR OPEN

D12, D13 DOOR KEY LOCK AND UNLOCK SW LH, RH
1–3 : CLOSED WITH DOOR LOCK CYLINDER UNLOCKED WITH KEY
2–3 : CLOSED WITH DOOR LOCK CYLINDER LOCKED WITH KEY

D15, D16 DOOR LOCK MOTOR AND DOOR UNLOCK DETECTION SW LH, RH
1–3 : CLOSED WITH **UNLOCK** POSITION

E 6 ENGINE HOOD COURTESY SW
1–2 : CLOSED WITH ENGINE HOOD OPEN

U 1 UNLOCK WARNING SW
2–1 : CLOSED WITH IGNITION KEY IN CYLINDER

L 3 LUGGAGE COMPARTMENT KEY UNLOCK SW
2–1 : CLOSED WITH DOOR LOCK CYLINDER UNLOCKED WITH KEY

L 5 LUGGAGE COMPARTMENT LIGHT SW
1–GROUND: CLOSED WITH DOOR OPEN

T 7(A), T13(B) THEFT DETERRENT ECU
(B) 9–GROUND: CONTINUOUS WITH LUGGAGE COMPARTMENT DOOR TO **UNLOCK** POSITION
(B)14–GROUND: CONTINUOUS WITH ENGINE HOOD OPEN
(B) 4–GROUND: CONTINUOUS WITH LUGGAGE COMPARTMENT DOOR OPEN
(B) 8–GROUND: CONTINUOUS WITH DOOR LOCK CONTROL SW TO **UNLOCK** POSITION
(B) 5–GROUND: CONTINUOUS WITH DOOR LOCK CONTROL SW TO **LOCK** POSITION
(B)25–GROUND: APPROX. **12** VOLTS WITH SHIFT LEVER IN **N** OR **P** POSITION AND IGNITION SW AT **ST** POSITION (A/T)
; APPROX. **12** VOLTS WITH CLUTCH PEDAL FULLY DEPRESSED (M/T)
(A) 7–GROUND: APPROX. **12** VOLTS WITH IGNITION SW AT **ON** POSITION
(B)20–GROUND: CONTINUOUS WITH IGNITION KEY IN CYLINDER
(B)15–GROUND: CONTINUOUS WITH LH DOOR TO **UNLOCK** POSITION
(B)21–GROUND: CONTINUOUS WITH RH DOOR TO **UNLOCK** POSITION
(B) 6–GROUND: CONTINUOUS WITH DOOR KEY LOCK AND UNLOCK SW LH TO **UNLOCK** POSITION
(B)16–GROUND: CONTINUOUS WITH DOOR KEY LOCK AND UNLOCK SW RH TO **UNLOCK** POSITION
(B)22–GROUND: CONTINUOUS WITH DOOR KEY LOCK AND UNLOCK SW TO **LOCK** POSITION
(A) 4–GROUND: ALWAYS CONTINUOUS
(B) 1–GROUND: ALWAYS APPROX. **12** VOLTS

: PARTS LOCATION

CODE	SEE PAGE	CODE	SEE PAGE	CODE		SEE PAGE
C 9	28	**E 6**	24 (2JZ–GTE)	**T 1**		25 (2JZ–GTE)
D10	30		26 (2JZ–GE)			27 (2JZ–GE)
D11	30	**I20**	29	**T 5**		29
D12	30	**L 3**	30	**T 7**	A	29
D13	30	**L 5**	30	**T13**	B	29
D14	30	**P 2**	25 (2JZ–GTE)	**U 1**		29
D15	30		27 (2JZ–GE)			
D16	30	**P 8**	30			

: RELAY BLOCKS

CODE	SEE PAGE	RELAY BLOCKS (RELAY BLOCK LOCATION)
2	22	R/B NO. 2 (ENGINE COMPARTMENT LEFT)

: JUNCTION BLOCK AND WIRE HARNESS CONNECTOR

CODE	SEE PAGE	JUNCTION BLOCK AND WIRE HARNESS (CONNECTOR LOCATION)
1B	20	ENGINE ROOM MAIN WIRE AND J/B NO. 1 (LEFT KICK PANEL)
1D	20	FRONT DOOR LH WIRE AND J/B NO.1 (LEFT KICK PANEL)
1E	20	INSTRUMENT PANEL WIRE AND J/B NO.1 (LEFT KICK PANEL)
1H	20	COWL WIRE AND J/B NO.1(LEFT KICK PANEL)
1I		
1J		
1K		
2A	22	BATTERY AND J/B NO. 2 (ENGINE COMPARTMENT LEFT)

: CONNECTOR JOINING WIRE HARNESS AND WIRE HARNESS

CODE	SEE PAGE	JOINING WIRE HARNESS AND WIRE HARNESS (CONNECTOR LOCATION)
EA1	32 (2JZ–GTE) 34 (2JZ–GE)	ENGINE WIRE AND ENGINE ROOM MAIN WIRE (NEAR THE R/B NO. 2)
IB2	36	ENGINE ROOM MAIN WIRE AND COWL WIRE (LEFT KICK PANEL)
IB3		
IB6	36	ENGINE ROOM MAIN WIRE AND COWL WIRE (RIGHT KICK PANEL)
IC2	36	FLOOR NO. 2 WIRE AND COWL WIRE (LEFT KICK PANEL)
ID1	36	FRONT DOOR LH WIRE AND INSTRUMENT PANEL WIRE (LEFT KICK PANEL)
IE1	36	INSTRUMENT PANEL WIRE AND FLOOR NO. 2 WIRE (LEFT KICK PANEL)
IF1	36	INSTRUMENT PANEL WIRE AND COWL WIRE (INSTRUMENT PANEL REINFORCEMENT LH)
IF2		
IF3	36	INSTRUMENT PANEL WIRE AND COWL WIRE (RIGHT KICK PANEL)
II1	38	ENGINE WIRE AND INSTRUMENT PANEL WIRE (RIGHT KICK PANEL)
IJ1	38	ENGINE WIRE AND COWL WIRE (RIGHT KICK PANEL)
IJ2		
IL1	38	FRONT DOOR RH WIRE AND INSTRUMENT PANEL WIRE (RIGHT KICK PANEL)

: GROUND POINTS

CODE	SEE PAGE	GROUND POINTS LOCATION
EA	32 (2JZ–GTE) 34 (2JZ–GE)	FRONT SIDE OF RIGHT FENDER
IE	36	LEFT KICK PANEL
IG	36	RIGHT KICK PANEL
IH		
BI	40	LEFT QUARTER PILLAR
BJ	40	LOWER BACK PANEL CENTER

: SPLICE POINTS

CODE	SEE PAGE	WIRE HARNESS WITH SPLICE POINTS	CODE	SEE PAGE	WIRE HARNESS WITH SPLICE POINTS
I 2	38	COWL WIRE	I21	38	INSTRUMENT PANEL WIRE
I 3	38	INSTRUMENT PANEL WIRE	B 1	40	FRONT DOOR LH WIRE
I 4	38	COWL WIRE	B 2	40	FRONT DOOR RH WIRE
I19	38	INSTRUMENT PANEL WIRE			

C 9



D10

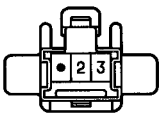

D11

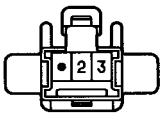

D12

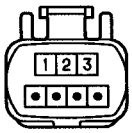

D13



D14

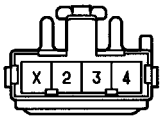

D15 GRAY



D16 GRAY



E 6 BLACK



I20

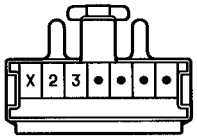

L 3



L 5 GRAY



P 2 GRAY

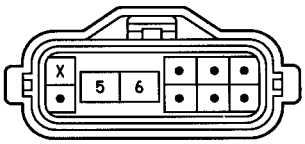

P 8

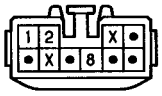

T 1 BLACK



(2JZ-GTE) T 5

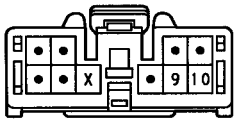

(2JZ-GE) T 5

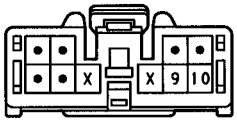

T 7 ORANGE

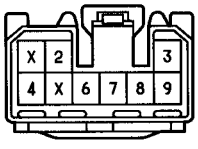

T13 ORANGE

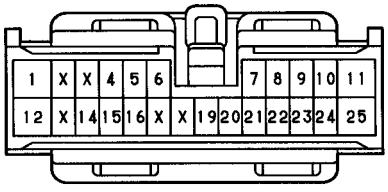

U 1 BLACK

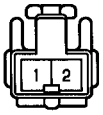

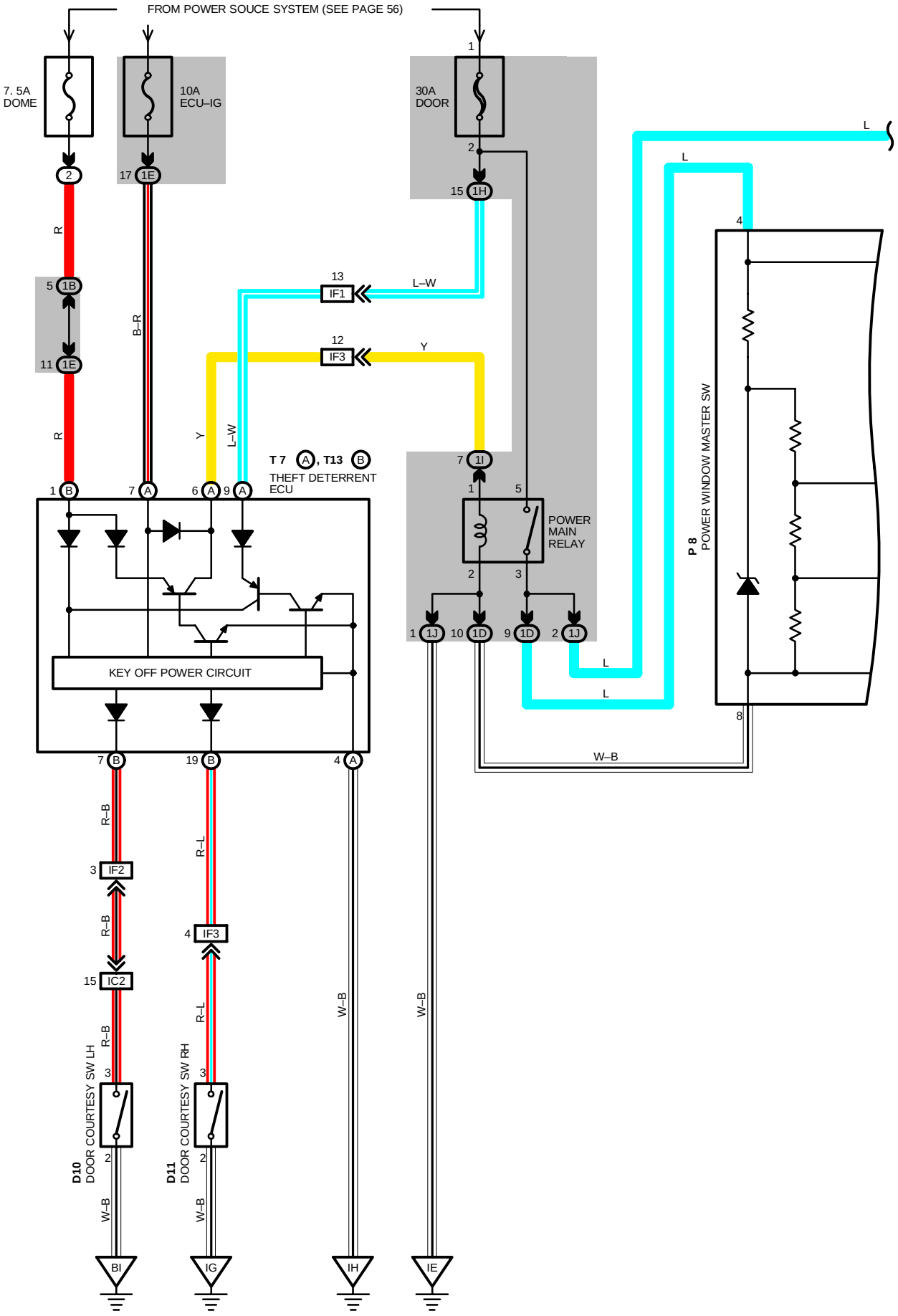
FROM POWER SOUCE SYSTEM (SEE PAGE 56)
7. 5A
DOME
10A
ECU–IG
30A
DOOR
17 1E
2
15 1H
1
R
5 1B
11 1E
B–R
13
IF1
L–W
12
IF3
Y
R
Y
L–W
T 7 A, T13 B
THEFT DETERRENT
ECU
1 B
7 A
6 A
9 A
7 1I
1
5
POWER
MAIN
RELAY
2
3
1 1J
10 1D
9 1D
2 1J
L
L
L
4
8
P 8
POWER WINDOW MASTER SW
W–B
KEY OFF POWER CIRCUIT
7 B
19 B
4 A
R–B
R–L
3
IF2
4
IF3
R–B
15
IC2
R–B
R–L
W–B
W–B
D10
DOOR COURTESY SW LH
D11
DOOR COURTESY SW RH
3
2
3
2
W–B
W–B
BI
IG
IH
IE

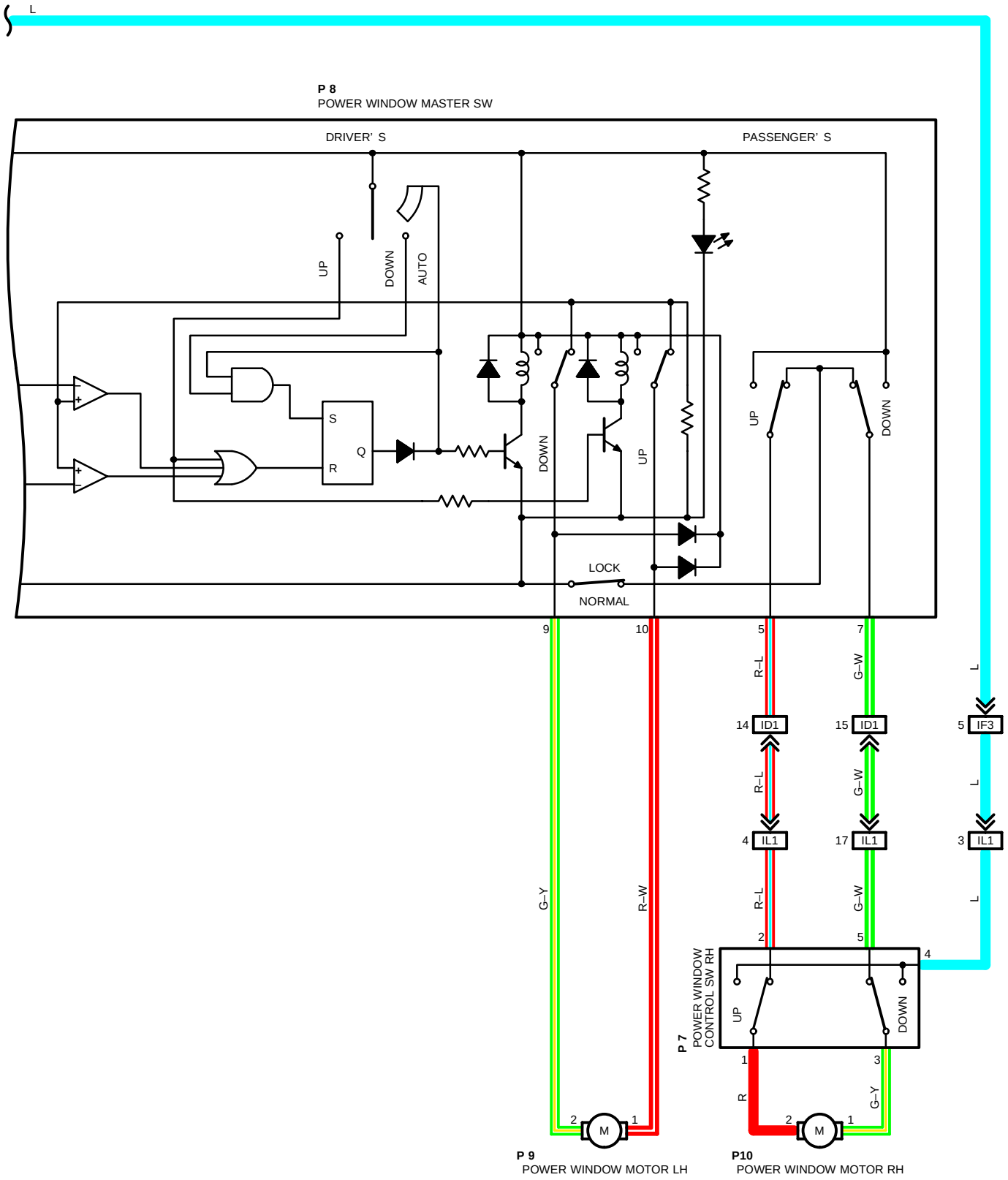
L
P 8
POWER WINDOW MASTER SW
DRIVER' S
PASSENGER' S
UP
DOWN
AUTO
S
Q
R
DOWN
UP
UP
DOWN
LOCK
NORMAL
9
10
5
7
R–L
G–W
L
14 ID1
15 ID1
5 IF3
R–L
G–W
L
4 IL1
17 IL1
3 IL1
R–L
G–W
L
G–Y
R–W
2
5
4
POWER WINDOW CONTROL SW RH
P 7
UP
DOWN
1
3
R
G–Y
2
M
1
2
M
1
P 9
POWER WINDOW MOTOR LH
P10
POWER WINDOW MOTOR RH

POWER WINDOW

SYSTEM OUTLINE

WITH THE IGNITION SW TURNED ON, CURRENT FLOWS THROUGH THE **ECU–IG** FUSE → **TERMINAL (A)7** OF THE THEFT DETERRENT ECU → **TERMINAL (A)6** → **TERMINAL 1** OF THE POWER MAIN RELAY → **TERMINAL 2** → **GROUND**, THIS ACTIVATES THE RELAY AND THE CURRENT FLOWING TO **TERMINAL 5** OF THE RELAY FROM **DOOR** FUSE FLOWS TO **TERMINAL 3** OF THE RELAY → **TERMINAL 4** OF THE POWER WINDOW MASTER SW AND **TERMINAL 4** OF THE POWER WINDOW CONTROL SW RH.

1. MANUAL OPERATION (DRIVER'S WINDOW)

WITH THE IGNITION SW TURNED ON AND WITH THE POWER WINDOW MASTER SW (DRIVER'S) IN **UP** POSITION, THE CURRENT FLOWING TO **TERMINAL 4** OF THE POWER WINDOW MASTER SW FLOWS TO **TERMINAL 10** OF THE MASTER SW → **TERMINAL 1** OF THE POWER WINDOW MOTOR → **TERMINAL 2** → **TERMINAL 9** OF THE MASTER SW → **TERMINAL 8** → GROUND AND CAUSES THE POWER WINDOW MOTOR TO ROTATE IN THE UP DIRECTION. THE WINDOW ASCENDS ONLY WHILE THE SW IS BEING PUSHED.

IN DOWN OPERATION, THE FLOW OF CURRENT FROM **TERMINAL 4** OF THE POWER WINDOW MASTER SW TO **TERNINAL 9** OF THE MASTER SW CAUSES THE FLOW OF CURRENT FROM **TERMINAL 2** OF THE POWER WINDOW MOTOR → **TERMINAL 1** → **TERMINAL 10** OF THE MASTER SW → **TERMINAL 8** → **GROUND**, FLOWING IN THE OPPOSITE DIRECTION TO MANUAL UP OPERATION AND CAUSING THE MOTOR TO ROTATE IN REVERSE, LOWERING THE WINDOW.

2. DRIVER'S WINDOW AUTO DOWN OPERATION

WHEN THE DRIVER'S WINDOW SW IS PUSHED STRONGLY ON THE DOWN SIDE, THE CURRENT FLOWING TO **TERMINAL 4** OF THE POWER WINDOW MASTER SW FLOWS TO THE DOWN CONTACT POINT AND AUTO DOWN CONTACT POINT OF THE DRIVER'S SW.

THIS ACTIVATES THE RELAY (DOWN SIDE) INSIDE THE POWER WINDOW MASTER SW, AND THE HOLD CIRCUIT ALSO TURNS ON AT THE SAME TIME, SO THE RELAY (DOWN SIDE) REMAINS ACTIVATED EVEN WHEN THE SW IS RELEASED.

CURRENT FLOWS AT THIS TIME FROM **TERMINAL 4** OF THE POWER WINDOW MASTER SW → **TERMINAL 9** → **TERMINAL 2** OF POWER WINDOW MOTOR → **TERMINAL 1** → **TERMINAL 10** OF POWER WINDOW MASTER SW → **TERMINAL 8** → **GROUND**, SO THE MOTOR CONTINUES TO OPERATE UNTIL THE DRIVER'S WINDOW IS FULLY DOWN.

WHEN THE DRIVER'S WINDOW FINISHES DOWN OPERATION THE HOLD CIRCUIT GOES OFF, SO THE RELAY (DOWN SIDE) ALSO TURNS OFF. THIS STOPS THE CURRENT FLOWING FROM **TERMINAL 4** OF THE POWER WINDOW MASTER SW TO **TERMINAL 9**, SO THE POWER WINDOW MOTOR STOPS AND AUTO DOWN OPERATION STOPS.

WHEN THE DRIVER'S SW IS PULLED ON THE UP SIDE DURING AUTO DOWN OPERATION, THE HOLD CIRCUIT IS TURNED OFF SO CURRENT FLOWS FROM **TERMINAL 4** OF THE POWER WINDOW MASTER SW TO **TERMINAL 9** IS CUT OFF AND THE POWER WINDOW MOTOR STOPS. IF THE SW REMAINS PULLED UP, THE RELAY (UP SIDE) IS ACTIVATED, SO CURRENT FLOWS FROM **TERMINAL 4** OF THE POWER WINDOW MASTER SW → **TERMINAL 10** → **TERMINAL 1** OF POWER WINDOW MOTOR → **TERMINAL 2** → **TERMINAL 9** → **TERMINAL 8** → **GROUND**, THE POWER WINDOW MOTOR ROTATES IN THE UP DIRECTION AND MANUAL UP OPERATION OCCURS WHILE THE SW IS PULLED UP.

3. MANUAL OPERATION BY POWER WINDOW SW (PASSENGER'S WINDOW)

WITH POWER WINDOW SW (PASSENGER'S) PULLED TO THE UP SIDE, CURRENT FLOWING FROM **TERMINAL 4** OF THE POWER WINDOW CONTROL SW FLOWS TO **TERMINAL 1** OF THE POWER WINDOW SW → **TERMINAL 2** OF THE POWER WINDOW MOTOR → **TERMINAL 1** → **TERMINAL 3** OF THE POWER WINDOW SW → **TERMINAL 5** → **TERMINAL 7** OF THE MASTER SW → **TERMINAL 8** → **GROUND** AND CAUSES THE POWER WINDOW MOTOR (PASSENGER'S) TO ROTATE IN THE UP DIRECTION. UP OPERATION CONTINUES ONLY WHILE THE POWER WINDOW SW IS PULLED TO THE UP SIDE. WHEN THE POWER WINDOW SW (PASSENGER'S) IS PULLED TO THE DOWN SIDE, THE CURRENT FLOWING TO THE MOTOR FLOWS IN THE OPPOSITE DIRECTION, FROM **TERMINAL 1** TO **TERMINAL 2**, AND THE MOTOR ROTATES IN REVERSE. WHEN THE WINDOW LOCK SW IS PUSHED TO THE LOCK SIDE, THE GROUND CIRCUIT TO THE PASSENGER'S WINDOW BECOMES OPEN.

AS A RESULT, EVEN IF OPEN/CLOSE OPERATION OF THE PASSENGER'S WINDOW IS TRIED, THE CURRENT FROM **TERMINAL 8** OF THE POWER WINDOW MASTER SW IS NOT GROUNDED AND THE MOTOR DOES NOT ROTATE, SO THE PASSENGER'S WINDOW CANNOT BE OPERATED AND WINDOW LOCK OCCURS. FURTHERMORE, REAR LH, RH WINDOW OPERATE THE SAME AS THE ABOVE CIRCUIT.

4. KEY OFF POWER WINDOW OPERATION

WITH THE IGNITION SW TURNED FROM ON TO OFF, THE THEFT DETERRENT ECU OPERATES AND CURRENT FLOWS FROM **DOOR** FUSE TO **TERMINAL (A)9** OF THE ECU OR **DOME** FUSE TO **TERMINAL (B)1** OF THE ECU → **TERMINAL (A)6** → **TERMINAL 1** OF POWER MAIN RELAY → **TERMINAL 2** → **GROUND** FOR ABOUT **60** SECONDS. THE SAME AS NORMAL OPERATION, THE CURRENT FLOWS FROM **DOOR** FUSE → **TERMINAL 5** OF THE POWER MAIN RELAY → **TERMINAL 3** → **TERMINAL 4** OF THE POWER WINDOW MASTER SW AND **TERMINAL 4** OF THE POWER WINDOW CONTROL SW RH. AS A RESULT, FOR ABOUT **60** SECONDS AFTER THE IGNITION SW IS TURNED OFF, THE FUNCTIONING OF THIS RELAY MAKES IT POSSIBLE TO RAISE AND LOWER THE POWER WINDOW. ALSO, BY OPENING THE FRONT DOOR (DOOR OPEN DETECTION SW ON) WITHIN ABOUT **60** SECONDS AFTER TURNING THE IGNITION SW TO OFF, A SIGNAL IS INPUT TO **TERMINAL (B)19, (B)7** OF THEFT DETERRENT ECU. AS A RESULT, THE ECU TURNED OFF AND UP AND DOWN MOVEMENT OF THE POWER WINDOW STOPS.

SERVICE HINTS

P 8 POWER WINDOW MASTER SW

4–GROUND : APPROX. **12** VOLTS WITH IGNITION SW AT **ON** POSITION
8–GROUND : ALWAYS CONTINUOUS
10–GROUND : APPROX. **12** VOLTS WITH IGNITION SW **ON** AND MASTER SW (DRIVER'S WINDOW) AT **UP** POSITION
9–GROUND : APPROX. **12** VOLTS WITH IGNITION SW **ON** AND MASTER SW (DRIVER'S WINDOW) AT **DOWN** OR **AUTO DOWN** POSITION

WINDOW LOCK SW

OPEN WITH THE WINDOW LOCK SW AT **LOCK** POSITION

: PARTS LOCATION

CODE	SEE PAGE	CODE	SEE PAGE	CODE		SEE PAGE
D10	30	**P 8**	30	**T 7**	A	29
D11	30	**P 9**	30	**T13**	B	29
P 7	30	**P10**	30			

: RELAY BLOCKS

CODE	SEE PAGE	RELAY BLOCKS (RELAY BLOCK LOCATION)
2	22	R/B NO. 2 (ENGINE COMPARTMENT LEFT)

: JUNCTION BLOCK AND WIRE HARNESS CONNECTOR

CODE	SEE PAGE	JUNCTION BLOCK AND WIRE HARNESS (CONNECTOR LOCATION)
1B	20	ENGINE ROOM MAIN WIRE AND J/B NO. 1 (LEFT KICK PANEL)
1D	20	FRONT DOOR LH WIRE AND J/B NO.1 (LEFT KICK PANEL)
1E	20	INSTRUMENT PANEL WIRE AND J/B NO.1 (LEFT KICK PANEL)
1H	20	COWL WIRE AND J/B NO.1 (LEFT KICK PANEL)
1I		
1J		

: CONNECTOR JOINING WIRE HARNESS AND WIRE HARNESS

CODE	SEE PAGE	JOINING WIRE HARNESS AND WIRE HARNESS (CONNECTOR LOCATION)
IC2	36	FLOOR NO. 2 WIRE AND COWL WIRE (LEFT KICK PANEL)
ID1	36	FRONT DOOR LH WIRE AND INSTRUMENT PANEL WIRE (LEFT KICK PANEL)
IF1	36	INSTRUMENT PANEL WIRE AND COWL WIRE (INSTRUMENT PANEL REINFORCEMENT LH)
IF2		
IF3	36	INSTRUMENT PANEL WIRE AND COWL WIRE (RIGHT KICK PANEL)
IL1	38	FRONT DOOR RH WIRE AND INSTRUMENT PANEL WIRE (LEFT KICK PANEL)

: GROUND POINTS

CODE	SEE PAGE	GROUND POINTS LOCATION
IE	36	LEFT KICK PANEL
IG	36	RIGHT KICK PANEL
IH		
BI	40	LEFT QUATER PILLER

D10

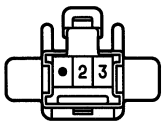

D11

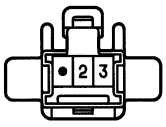

P 7

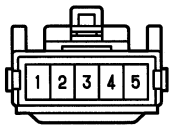

P 8

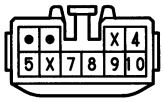

P 9 GRAY



P10 GRAY



T 7 (A) ORANGE

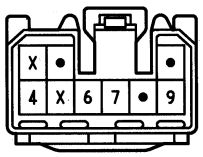

T13 (B) ORANGE

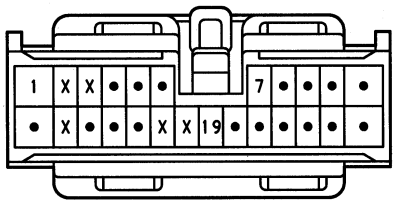

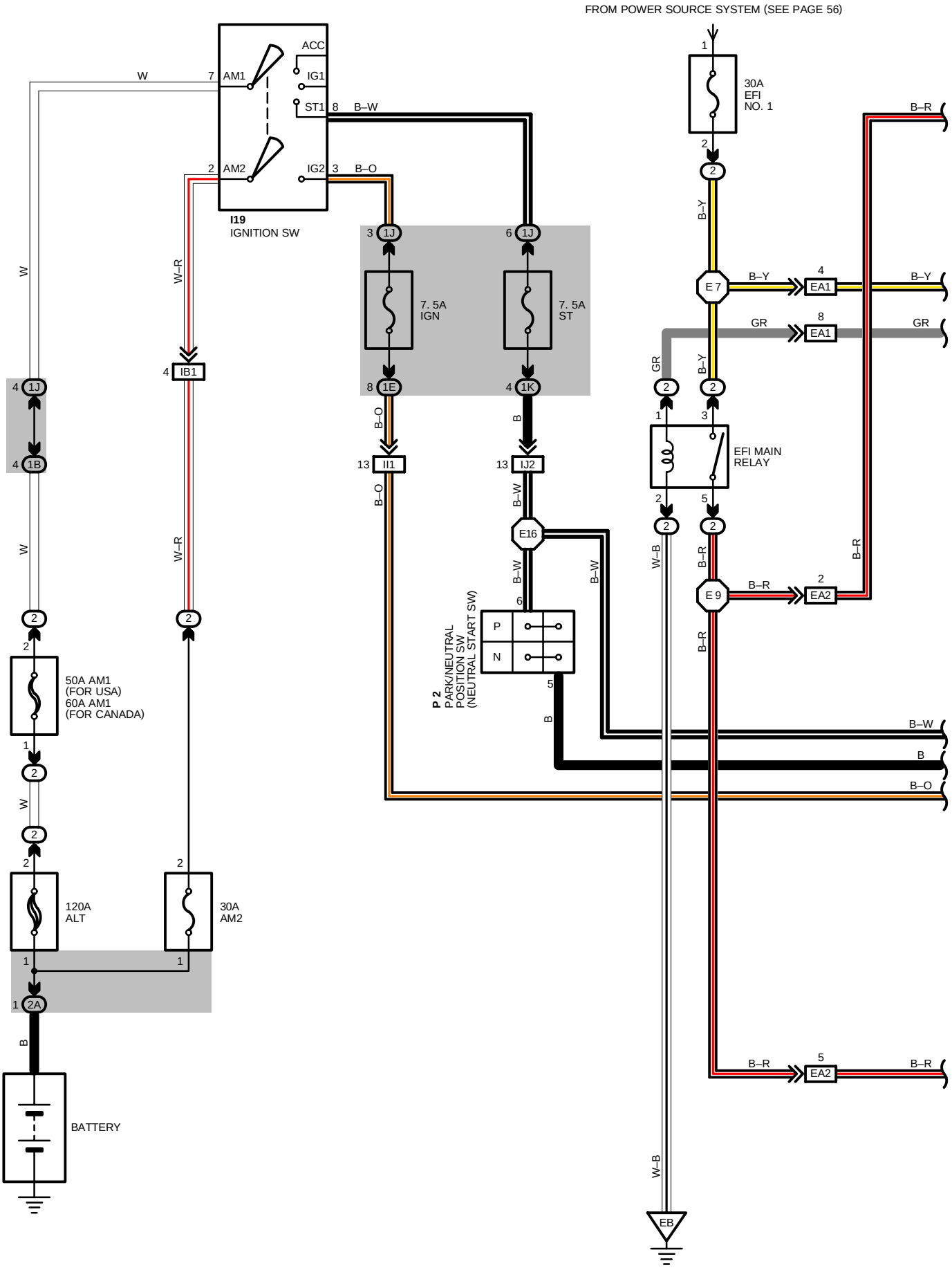
FROM POWER SOURCE SYSTEM (SEE PAGE 56)
I19
IGNITION SW
ACC
IG1
ST1
AM1
AM2
IG2
W
B–W
B–O
W–R
7. 5A
IGN
7. 5A
ST
IB1
1J
1B
1E
1K
II1
IJ2
E16
E7
E9
EA1
EA2
B–Y
GR
B–R
B
W–B
30A
EFI
NO. 1
EFI MAIN
RELAY
P 2
PARK/NEUTRAL
POSITION SW
(NEUTRAL START SW)
P
N
50A AM1
(FOR USA)
60A AM1
(FOR CANADA)
120A
ALT
30A
AM2
2A
BATTERY
EB

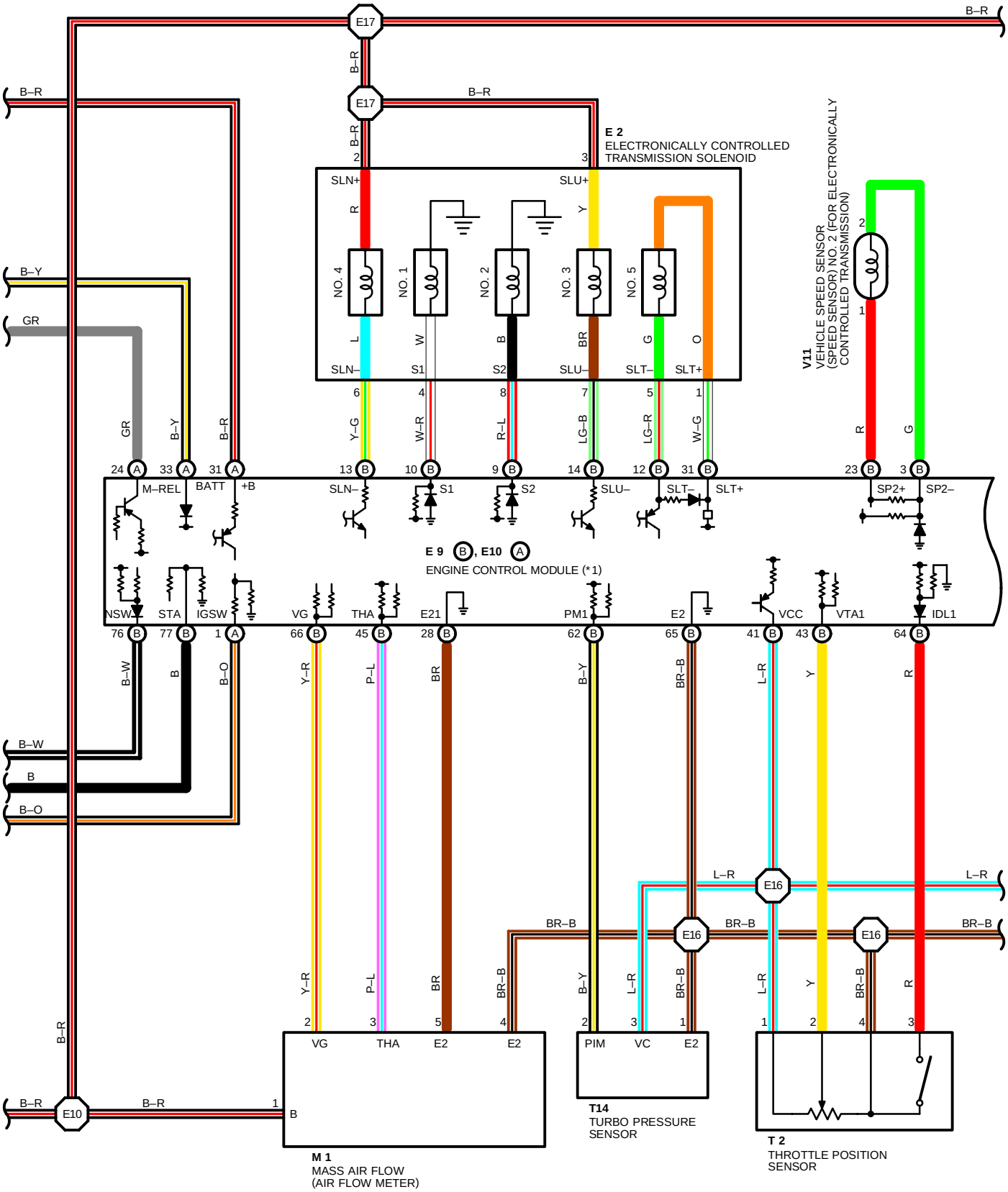
E17
B–R
E17
B–R
B–R
B–R
E 2
ELECTRONICALLY CONTROLLED
TRANSMISSION SOLENOID
SLN+
SLU+
NO. 4
NO. 1
NO. 2
NO. 3
NO. 5
SLN–
S1
S2
SLU–
SLT–
SLT+
V11
VEHICLE SPEED SENSOR
(SPEED SENSOR) NO. 2 (FOR ELECTRONICALLY
CONTROLLED TRANSMISSION)
B–Y
GR
B–R
M–REL
BATT
+B
SLN–
S1
S2
SLU–
SLT–
SLT+
SP2+
SP2–
E 9 B , E10 A
ENGINE CONTROL MODULE (*1)
NSW
STA
IGSW
VG
THA
E21
PM1
E2
VCC
VTA1
IDL1
B–W
B
B–O
Y–R
P–L
BR
B–Y
BR–B
L–R
Y
R
B–W
B
B–O
L–R
E16
BR–B
E16
BR–B
E16
L–R
BR–B
B–R
B–R
E10
B–R
M 1
MASS AIR FLOW
(AIR FLOW METER)
VG
THA
E2
E2
T14
TURBO PRESSURE
SENSOR
PIM
VC
E2
T 2
THROTTLE POSITION
SENSOR

ELECTRONICALLY CONTROLLED TRANSMISSION AND A/T INDICATOR (FOR 2JZ–GTE)

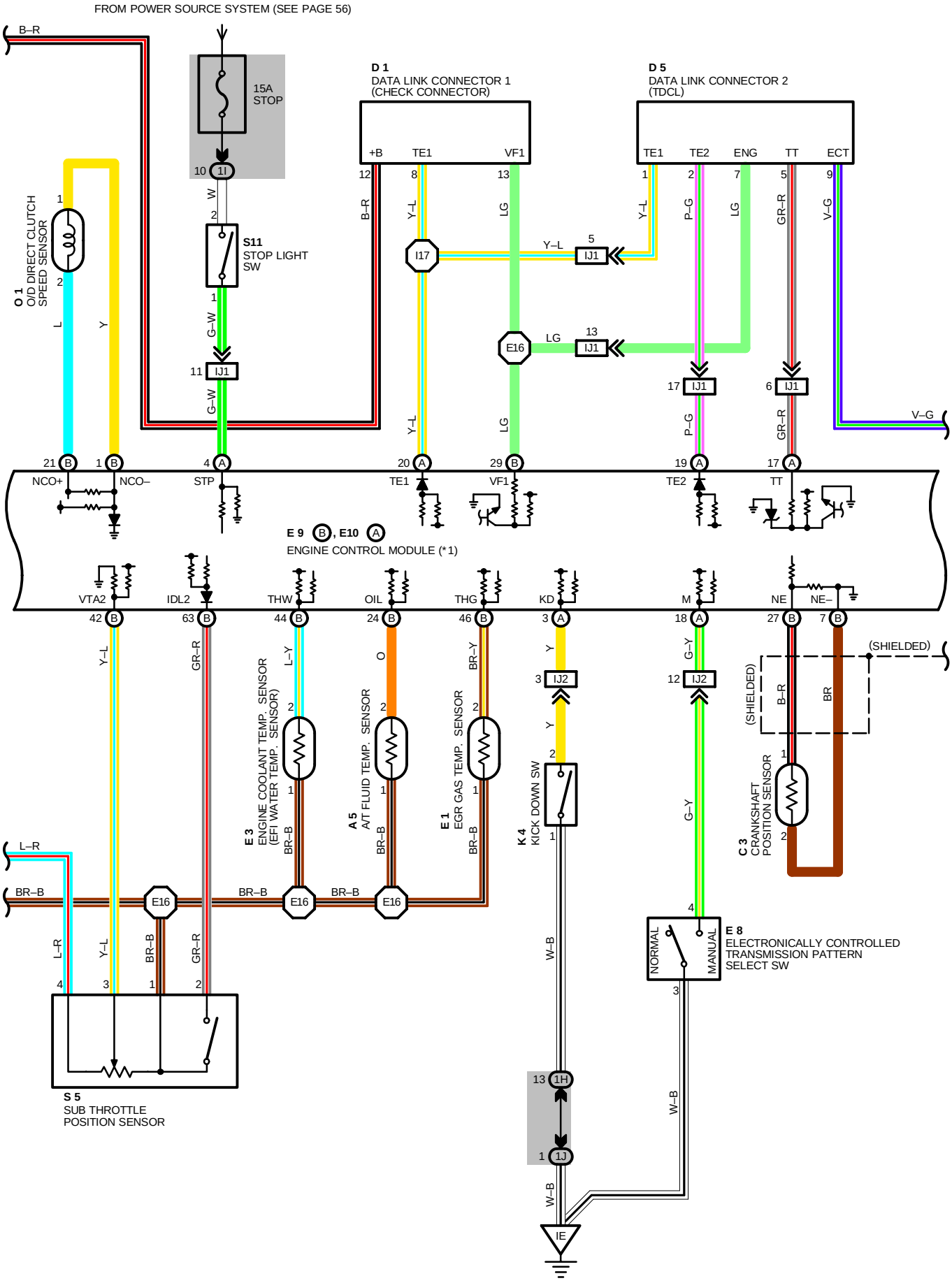

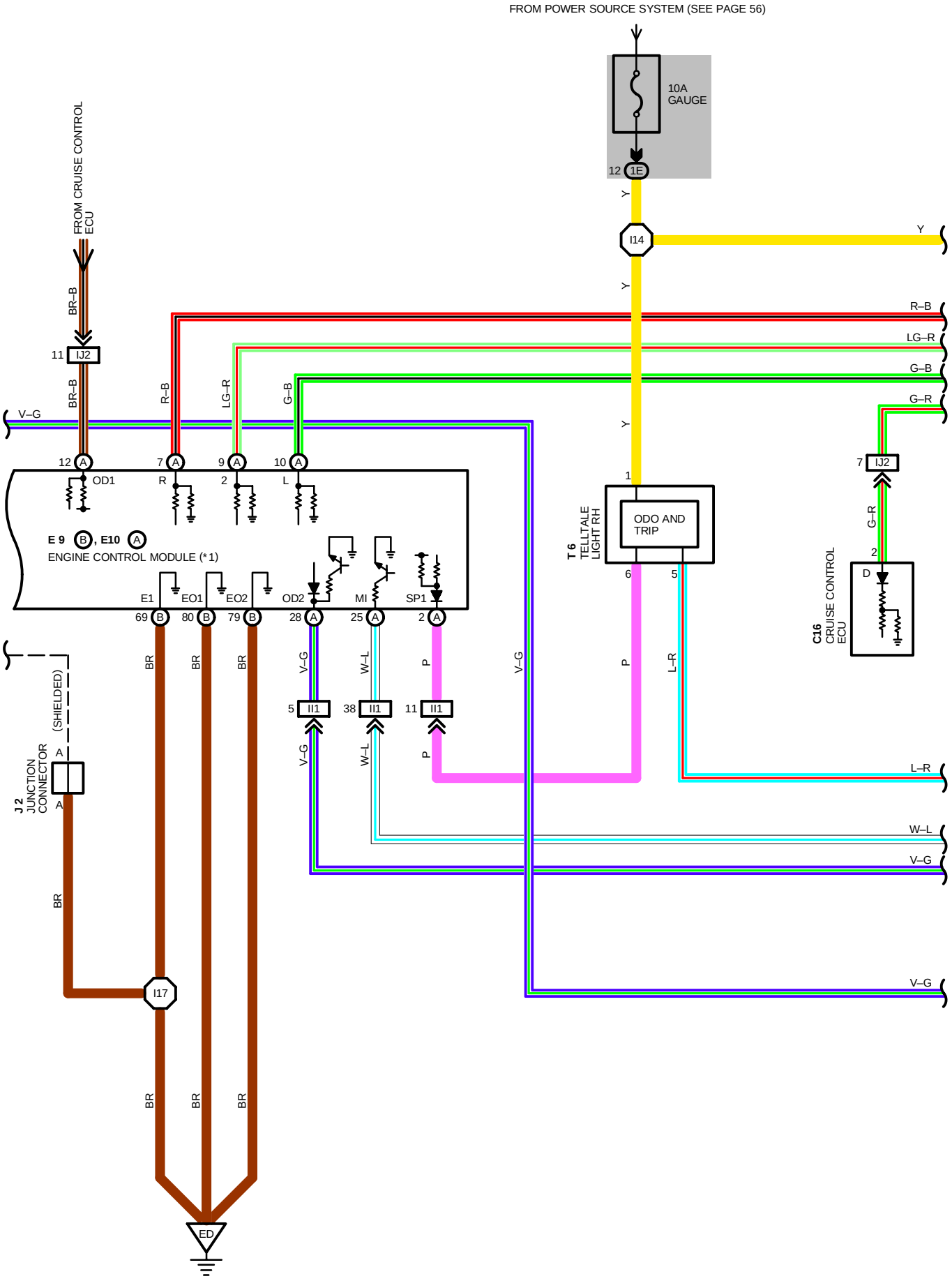
FROM POWER SOURCE SYSTEM (SEE PAGE 56)
10A
GAUGE
12 1E
I14
FROM CRUISE CONTROL ECU
BR–B
11 IJ2
BR–B
R–B
LG–R
G–B
V–G
12 A OD1
7 A R
9 A 2
10 A L
E 9 B, E10 A
ENGINE CONTROL MODULE (*1)
E1
EO1
EO2
OD2
MI
SP1
69 B
80 B
79 B
28 A
25 A
2 A
BR
V–G
W–L
P
L–R
5 II1
38 II1
11 II1
(SHIELDED)
J 2
JUNCTION
CONNECTOR
A
A
I17
ED
Y
R–B
LG–R
G–B
G–R
1
ODO AND
TRIP
T 6
TELLTALE
LIGHT RH
6
5
7 IJ2
G–R
2
D
C16
CRUISE CONTROL
ECU

ELECTRONICALLY CONTROLLED TRANSMISSION AND A/T INDICATOR (FOR 2JZ–GTE)

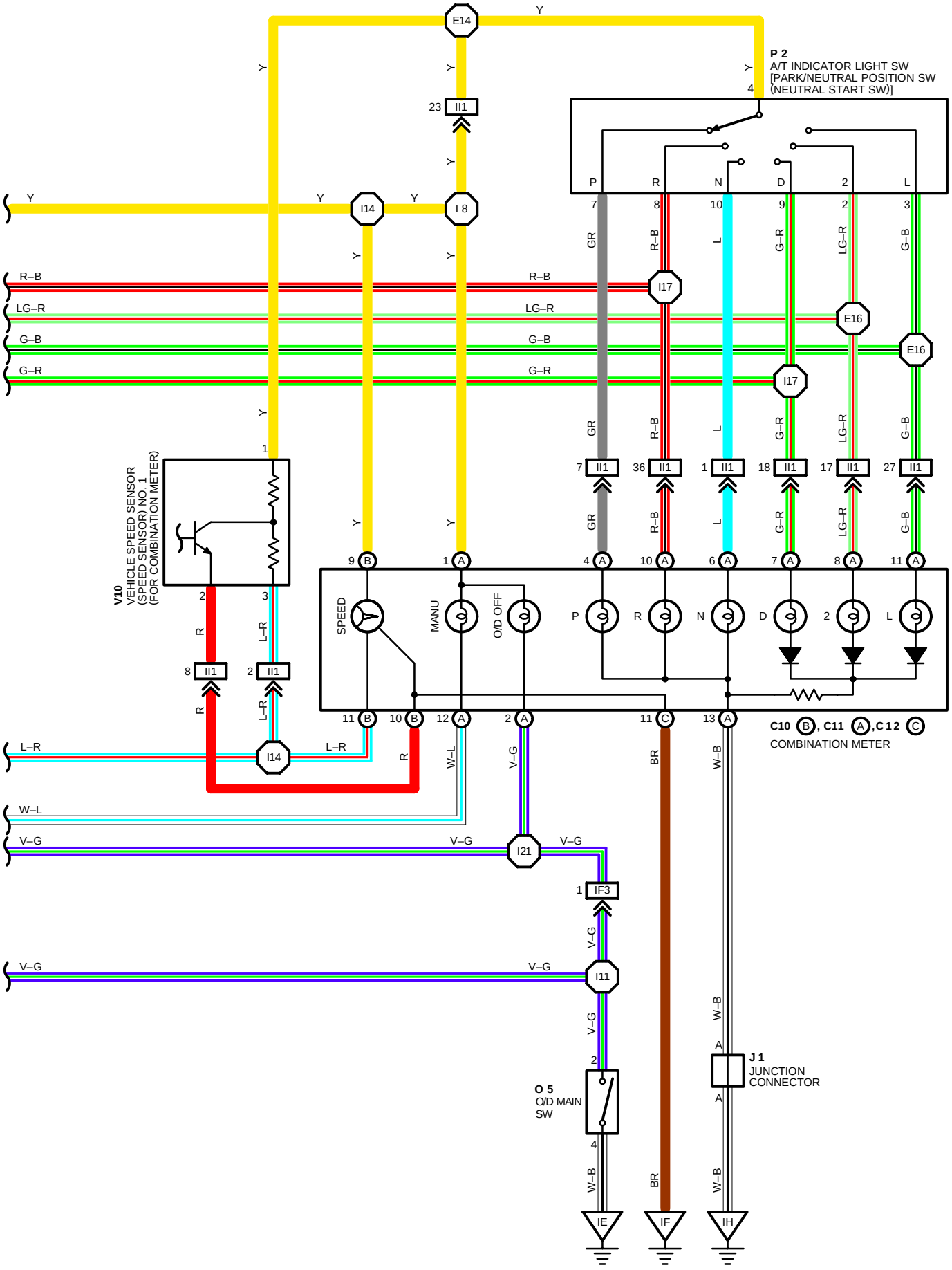

SYSTEM OUTLINE

THIS SYSTEM ELECTRICALLY CONTROLS THE LINE PRESSURE, THROTTLE PRESSURE, LOCK–UP PRESSURE AND ACCUMULATOR PRESSURE ETC. THROUGH THE SOLENOID VALVE. THE ELECTRONICALLY CONTROLLED TRANSMISSION IS A SYSTEM WHICH PRECISELY CONTROLS GEAR SHIFT TIMING AND LOCK–UP TIMING IN RESPONSE TO THE VEHICLE'S DRIVING CONDITIONS AND THE ENGINE OPERATING CONDITIONS DETECTED BY VARIOUS SENSORS, MAKING SMOOTH DRIVING POSSIBLE BY SHIFT SELECTION FOR EACH GEAR WHICH IS THE MOST APPROPRIATE TO THE DRIVING CONDITIONS AT THAT TIME, AND CONTROLS THE ENGINE TORQUE DURING SHIFTING TO ACHIEVE OPTIMUM SHIFT FEELING.

1. GEAR SHIFT OPERATION

WHEN DRIVING, THE ENGINE WARM UP CONDITION IS INPUT AS A SIGNAL TO **TERMINAL (B)44** OF THE ENGINE CONTROL MODULE (ENGINE AND ELECTRONICALLY CONTROLLED TRANSMISSION ECU) FROM THE ENGINE COOLANT TEMP. SENSOR (EFI WATER TEMP. SENSOR) AND THE VEHICLE SPEED SIGNAL FROM VEHICLE SPEED SENSOR (SPEED SENSOR) NO.2 IS INPUT TO **TERMINAL (B) 23** OF THE ENGINE CONTROL MODULE (ENGINE AND ELECTRONICALLY CONTROLLED TRANSMISSION ECU). AT THE SAME TIME, THE THROTTLE VALVE OPENING SIGNAL FROM THE THROTTLE POSITION SENSOR (MAIN) IS INPUT TO **TERMINAL (B)43** OF THE ENGINE CONTROL MODULE (ENGINE AND ELECTRONICALLY CONTROLLED TRANSMISSION ECU) AS THROTTLE ANGLE SIGNAL.

BASED ON THESE SIGNALS, THE ENGINE CONTROL MODULE (ENGINE AND ELECTRONICALLY CONTROLLED TRANSMISSION ECU) SELECTS THE BEST SHIFT POSITION FOR DRIVING CONDITIONS AND SENDS CURRENT TO THE ELECTRONICALLY CONTROLLED TRANSMISSION SOLENOIDS.

WHEN SHIFTING TO 1ST SPEED, THE CURRENT FLOWS FROM **TERMINAL (B)10** OF THE ENGINE CONTROL MODULE (ENGINE AND ELECTRONICALLY CONTROLLED TRANSMISSION ECU) → **TERMINAL 4** OF ELECTRONICALLY CONTROLLED TRANSMISSION SOLENOID → **GROUND** AND CONTINUITY TO NO. 1 SOLENOID CAUSES THE SHIFT (NO. 2 SOLENOID DOES NOT HAVE CONTINUITY AT THIS TIME).

FOR 2ND SPEED, THE CURRENT FLOWS SIMULTANEOUSLY FROM **TERMINAL (B)9** OF THE ENGINE CONTROL MODULE (ENGINE AND ELECTRONICALLY CONTROLLED TRANSMISSION ECU) → **TERMINAL 8** OF ELECTRONICALLY CONTROLLED TRANSMISSION SOLENOID → **GROUND**, AND FROM **TERMINAL (B)10** OF THE ENGINE CONTROL MODULE (ENGINE AND ELECTRONICALLY CONTROLLED TRANSMISSION ECU) → **TERMINAL 4** OF ELECTRONICALLY CONTROLLED TRANSMISSION SOLENOID → **GROUND**, AND CONTINUITY TO NO. 1 AND NO. 2 SOLENOIDS CAUSES THE SHIFT.

FOR 3RD SPEED, THERE IS NO CONTINUITY TO NO. 1 SOLENOID, ONLY TO NO. 2 SOLENOID, CAUSING THE SHIFT.

SHIFTING INTO THE 4TH SPEED (OVERDRIVE) OCCURS WHEN NO CURRENT FLOWS TO NO. 1 AND NO. 2 SOLENOIDS. THE NO. 4 SOLENOID (FOR ACCUMULATOR BACK PRESSURE MODULATION) IS INSTALLED TO ADJUST THE BACK PRESSURE ON THE ACCUMULATOR AND CONTROLS THE HYDRAULIC PRESSURE DURING SHIFTING AND LOCK–UP IN ORDER TO PROVIDE SMOOTH SHIFTING WITH LITTLE SHIFT SHOCK.

2. LOCK–UP OPERATION

WHEN THE ENGINE CONTROL MODULE (ENGINE AND ELECTRONICALLY CONTROLLED TRANSMISSION ECU) DECIDES, BASED ON EACH SIGNAL, THAT THE LOCK–UP CONDITION HAS BEEN MET, THE CURRENT THROUGH **EFI NO. 1** FUSE FLOWS FROM THE EFI MAIN RELAY → **TERMINAL 3** OF THE ELECTRONICALLY CONTROLLED TRANSMISSION SOLENOID → **TERMINAL 7** → **TERMINAL (B)14** OF THE ENGINE CONTROL MODULE (ENGINE AND ELECTRONICALLY CONTROLLED TRANSMISSION ECU) → **GROUND,** SO CONTINUITY TO NO. 3 (FOR LOCK–UP) CAUSES LOCK–UP.

3. STOP LIGHT SW CIRCUIT

IF THE BRAKE PEDAL IS DEPRESSED (STOP LIGHT SW ON) WHEN DRIVING IN LOCK–UP CONDITION, A SIGNAL IS INPUT TO **TERMINAL (A)4** OF THE ENGINE CONTROL MODULE (ENGINE AND ELECTRONICALLY CONTROLLED TRANSMISSION ECU). THE ENGINE CONTROL MODULE (ENGINE AND ELECTRONICALLY CONTROLLED TRANSMISSION ECU) OPERATES AND CUTS THE CURRENT TO THE SOLENOID TO RELEASE LOCK–UP.

4. OVERDRIVE CIRCUIT

***** O/D MAIN SW ON

WHEN THE O/D MAIN SW IS TURNED ON (SW POINT IS OPEN), A SIGNAL IS INPUT TO **TERMINAL (A)28** OF THE ENGINE CONTROL MODULE (ENGINE AND ELECTRONICALLY CONTROLLED TRANSMISSION ECU) AND THE ELECTRONICALLY CONTROLLED TRANSMISSION CAUSES SHIFT TO OVERDRIVE WHEN THE CONDITIONS FOR OVERDRIVE ARE MET.

***** O/D MAIN SW OFF

WHEN THE O/D MAIN SW IS TURNED OFF (SW POINT IS CLOSED), THE CURRENT FLOWING THROUGH THE O/D OFF INDICATOR LIGHT FLOWS TO **GROUND** BY WAY OF THE O/D MAIN SW AND CAUSES THE O/D OFF INDICATOR LIGHT TO LIGHT UP. AT THE SAME TIME, A SIGNAL IS INPUT TO **TERMINAL (A)28** OF THE ENGINE CONTROL MODULE (ENGINE AND ELECTRONICALLY CONTROLLED TRANSMISSION ECU) AND THE ELECTRONICALLY CONTROLLED TRANSMISSION PREVENTS SHIFT INTO OVERDRIVE.

5. ELECTRONICALLY CONTROLLED TRANSMISSION PATTERN SELECT SW CIRCUIT

WHEN THE ELECTRONICALLY CONTROLLED TRANSMISSION PATTERN SELECT SW IS SWICHED FROM NORMAL TO MANUAL, A SIGNAL IS INPUT TO **TERMINAL (A)18** OF THE ENGINE CONTROL MODULE (ENGINE AND ELECTRONICALLY CONTROLLED TRANSMISSION ECU). INPUT OF THIS SIGNAL CAUSES CURRENT TO FLOW FROM THE **GAUGE** FUSE TO **TERMINAL (A)1** OF COMBINATION METER → **TERMINAL (A)12** → **TERMINAL (A)25** OF ENGINE CONTROL MODULE (ENGINE AND ELECTRONICALLY CONTROLLED TRANSMISSION ECU) → **GROUND**, LIGHTING UP THE INDICATOR LIGHT. IF THE A/T SHIFT LEVER IS THEN SHIFTED TO **"2"** POSITION, THE ENGINE CONTROL MODULE (ENGINE AND ELECTRONICALLY CONTROLLED TRANSMISSION ECU) ENABLES THE VEHICLE TO START OFF WITH THE TRANSMISSION IS 2ND GEAR, THUS PERMITTING EASING STARTING OFF AND DRIVING ON SLIPPERY ROADS.

6. CRUISE CONTROL

WHEN CRUISE CONTROL OPERATION IS SELECTED A SIGNAL IS INPUT TO **TERMINAL (A)12** OF THE ENGINE CONTROL MODULE (ENGINE AND ELECTRONICALLY CONTROLLED TRANSMISSION ECU) FROM CRUISE CONTROL. ECU. AS A RESULT, THE ENGINE CONTROL MODULE (ENGINE AND ELECTRONICALLY CONTROLLED TRANSMISSION ECU) OPERATES AND CONTROLS OVERDRIVE, LOCK–UP AND SO ON FOR SMOOTH DRIVING.

ELECTRONICALLY CONTROLLED TRANSMISSION AND A/T INDICATOR (FOR 2JZ–GTE)

SERVICE HINTS

E 2 ELECTRONICALLY CONTROLLED TRANSMISSION SOLENOID

8– GROUND : APPROX. **13.2**
4– GROUND : APPROX. **13.2**
6–2 : APPROX. **8.3**
7–3 : APPROX. **3.8**
1–5 : APPROX. **3.8**

E 3 ENGINE COOLANT TEMP. SENSOR (EFI WATER TEMP. SENSOR)

1– 2: **10–20** K (**–20**˚C, **–4**˚F)
4– 7 K (**0**˚C, **32**˚F)
2– 3 K (**20**˚C, **68**˚F)
0.9–1.3 K (**40**˚C, **104**˚F)
0.4–0.7 K (**60**˚C, **140**˚F)
0.2–0.4 K (**80**˚C, **176**˚F)

E 9(B), E10(A) ENGINE CONTROL MODULE (ENGINE AND ELECTRONICALLY CONTROLLED TRANSMISSION ECU)

BATT–E1 : ALWAYS **9–14** VOLTS
IGSW–E1 : **9–14** VOLTS WITH IGNITION SW ON
+B–E1 : **9–14** VOLTS WITH IGNITION SW ON
IDL1–E1 : **0 –1.5** VOLTS WITH IGNITION SW ON AND THROTTLE VALVE FULLY CLOSED
9–14 VOLTS WITH IGNITION SW ON AND THROTTLE VALVE FULLY OPEN
VTA1–E1 : **0.3– 0.8** VOLTS WITH IGNITION SW ON AND THROTTLE VALVE FULLY CLOSED
3.2–4.9 VOLTS WITH IGNITION SW ON AND THROTTLE VALVE FULLY OPEN
STA–E1 : **6–14** VOLTS WITH ENGINE CRANKING
M–REL–E1 : **9–14** VOLTS WITH IGNITION SW ON
VCC–E1 : **4.5–5.5** VOLTS WITH IGNITION SW ON
L–E1 : APPROX. **7.5– 14.0** VOLTS WITH SHIFT LEVER AT **“L”** POSITION
2–E1 : APPROX. **7.5– 14.0** VOLTS WITH SHIFT LEVER AT **“2”** POSITION
R–E1 : APPROX. **7.5– 14.0** VOLTS WITH SHIFT LEVER AT **“R”** POSITION

O 1 O/D DIRECT CLUTCH SPEED SENSOR

1–2 : APPROX. **620**

V11 VEHICLE SPEED SENSOR (SPEED SENSOR) NO. 2 (FOR ELECTRONICALLY CONTROLLED TRANSMISSION)

1–2 : APPROX. **620**

E 8 ELECTRONICALLY CONTROLLED TRANSMISSION PATTERN SELECT SW

4–3 : CLOSED WITH ELECTRONICALLY CONTROLLED TRANSMISSION PATTERN SELECT SW AT **MANUAL** POSITION

: PARTS LOCATION

CODE	SEE PAGE	CODE	SEE PAGE	CODE	SEE PAGE
A 5	24 (2JZ–GTE)	**E 3**	24 (2JZ–GTE)	**O 5**	29
C 3	24	**E 8**	29	**P 2**	25 (2JZ–GTE)
C10 B	28	**E 9** B	29	**S 5**	25
C11 A	28	**E10** A	29	**S11**	29
C12 **C**	28	**I19**	29	**T 2**	25 (2JZ–GTE)
C16	28	**J 1**	29	**T 6**	29
D 1	24 (2JZ–GTE)	**J 2**	29	**T14**	25
D 5	28	**K 4**	29	**V10**	25 (2JZ–GTE)
E 1	24 (2JZ–GTE)	**M 1**	25	**V11**	25 (2JZ–GTE)
E 2	24 (2JZ–GTE)	**O 1**	25		

: RELAY BLOCKS

CODE	SEE PAGE	RELAY BLOCKS (RELAY BLOCK LOCATION)
2	22	R/B NO. 2 (ENGINE COMPARTMENT LEFT)

: JUNCTION BLOCK AND WIRE HARNESS CONNECTOR

CODE	SEE PAGE	JUNCTION BLOCK AND WIRE HARNESS (CONNECTOR LOCATION)
1B	20	ENGINE ROOM MAIN WIRE AND J/B NO. 1 (LEFT KICK PANEL)
1E	20	INSTRUMENT PANEL WIRE AND J/B NO.1 (LEFT KICK PANEL)
1H	20	COWL WIRE AND J/B NO.1 (LEFT KICK PANEL)
1I		
1J		
1K		
2A	22	BATTERY AND J/B NO.2 (ENGINE COMPARTMENT LEFT)

: CONNECTOR JOINING WIRE HARNESS AND WIRE HARNESS

CODE	SEE PAGE	JOINING WIRE HARNESS AND WIRE HARNESS (CONNECTOR LOCATION)
EA1	32 (2JZ–GTE)	ENGINE WIRE AND ENGINE ROOM MAIN WIRE (NEAR THE R/B NO. 2))
EA2	32	
IB1	36	ENGINE ROOM MAIN WIRE AND COWL WIRE (LEFT KICK PANEL)
IF3	36	INSTRUMENT PANEL WIRE AND COWL WIRE (RIGHT KICK PANEL)
II1	38	ENGINE WIRE AND INSTRUMENT PANEL WIRE (RIGHT KICK PANEL)
IJ1	38	ENGINE WIRE AND COWL WIRE (RIGHT KICK PANEL)
IJ2		

: GROUND POINTS

CODE	SEE PAGE	GROUND POINTS LOCATION
EB	32 (2JZ–GTE)	FRONT SIDE OF LEFT FENDER
ED	32 (2JZ–GTE)	REAR SIDE OF INTAKE MANIFOLD
IE	36	LEFT KICK PANEL
IF		
IH	36	RIGHT KICK PANEL

: SPLICE POINTS

CODE	SEE PAGE	WIRE HARNESS WITH SPLICE POINTS	CODE	SEE PAGE	WIRE HARNESS WITH SPLICE POINTS
E 7	32	ENGINE ROOM MAIN WIRE	**I 8**	38	INSTRUMENT PANEL WIRE
E 9			**I11**	38	COWL WIRE
E10	32	ENGINE WIRE	**I14**	38	INSTRUMENT PANEL WIRE
E14			**I17**	38	ENGINE WIRE
E16			**I21**	38	INSTRUMENT PANEL WIRE
E17					

A 5 GRAY

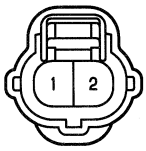

C 3 DARK GRAY



C10 (B) BLUE

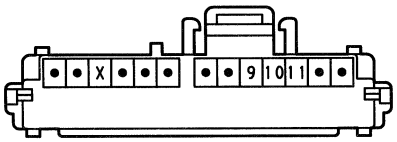

C11 (A) BROWN

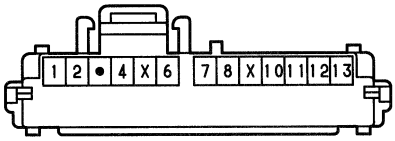

C12 (C)

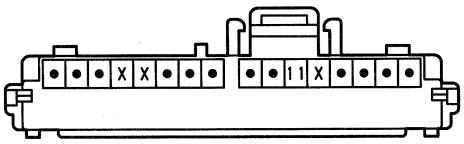

C16 GREEN

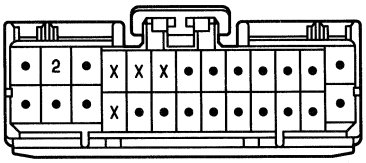

D 1 BLACK

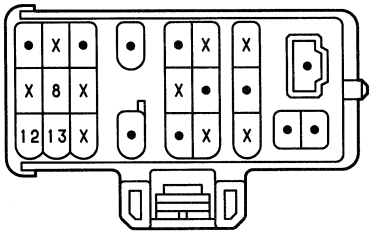

D 5 DARK GRAY

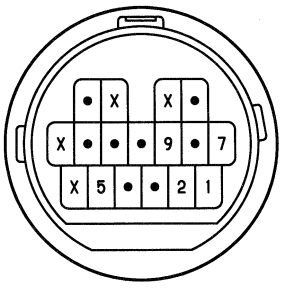

E 1 DARK GRAY



E 2 GRAY

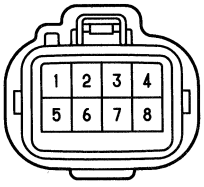

E 3 DARK GRAY



E 8

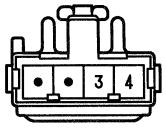

E 9 (B) DARK GRAY

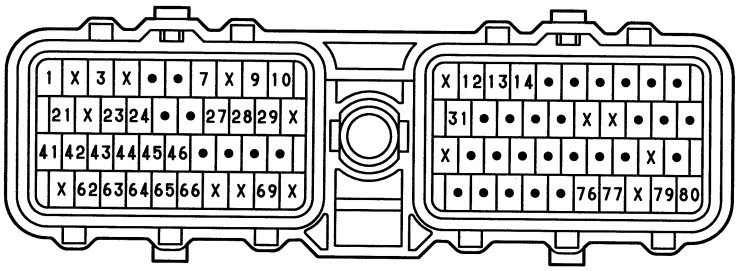

E10 (A) DARK GRAY

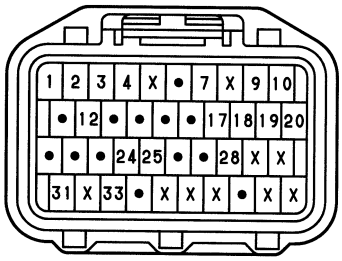

I19

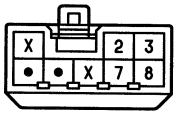

J 1

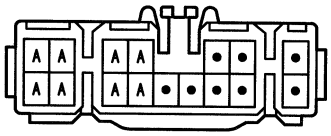

(HINT:SEE PAGE 7)

J 2

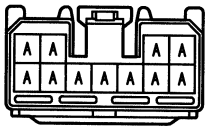

(HINT:SEE PAGE 7)

K 4 BLACK



M 1 BLACK

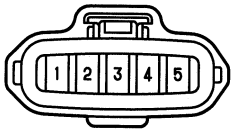

O 1 BLACK



O 5 BLUE

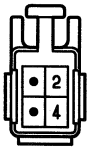

P 2 GRAY

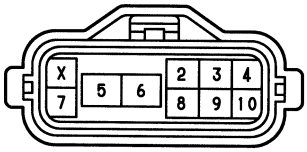

S 5 BLACK



S11 BLUE

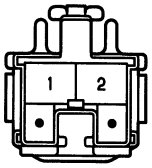

T 2 BLACK



T 6

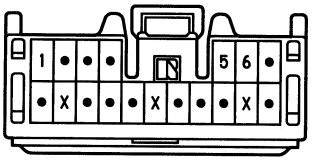

T14 BLACK



V10 BLACK



V11 BLACK



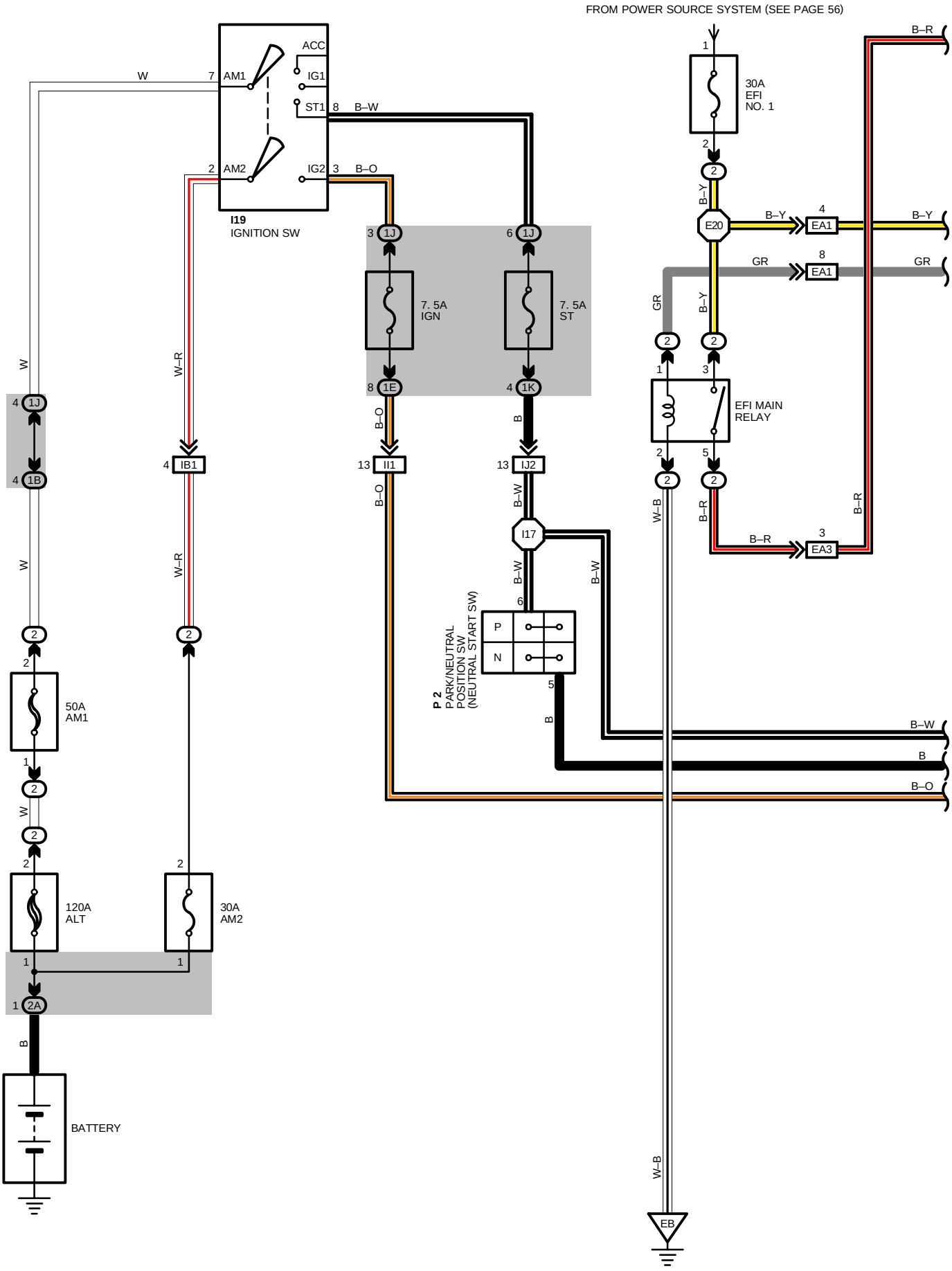
FROM POWER SOURCE SYSTEM (SEE PAGE 56)
I19
IGNITION SW
ACC
IG1
ST1
AM1
AM2
IG2
W
B–W
B–O
7. 5A
IGN
7. 5A
ST
W–R
B–O
B
B–W
I17
P 2
PARK/NEUTRAL
POSITION SW
(NEUTRAL START SW)
P
N
50A
AM1
120A
ALT
30A
AM2
BATTERY
30A
EFI
NO. 1
B–R
B–Y
E20
EA1
GR
EFI MAIN
RELAY
EA3
W–B
EB

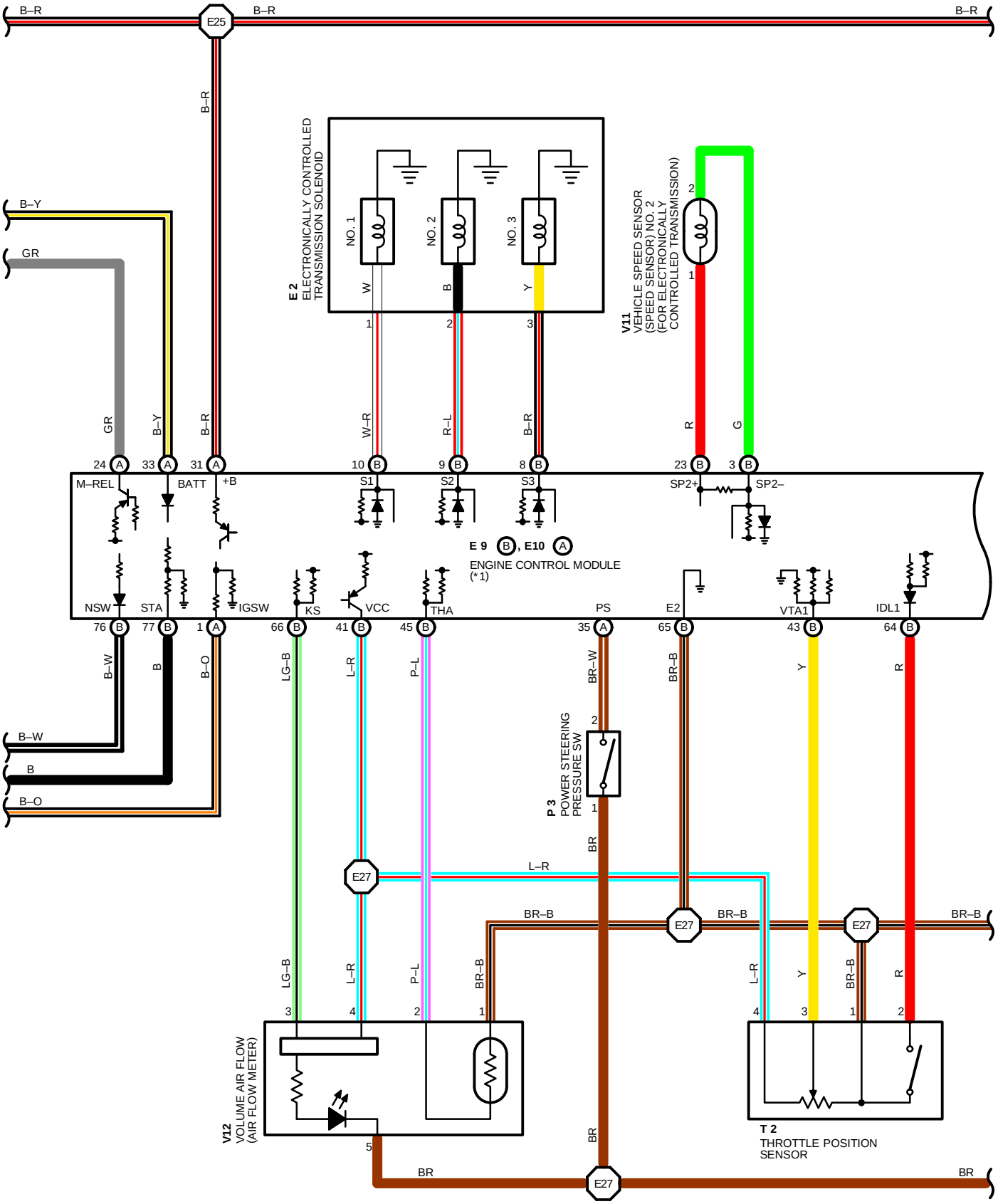
B–R
E25
B–R
B–R
B–Y
GR
E 2
ELECTRONICALLY CONTROLLED TRANSMISSION SOLENOID
NO. 1
NO. 2
NO. 3
W
B
Y
1
2
3
V11
VEHICLE SPEED SENSOR (SPEED SENSOR) NO. 2 (FOR ELECTRONICALLY CONTROLLED TRANSMISSION)
2
1
R
G
GR
B–Y
B–R
W–R
R–L
B–R
24 A
33 A
31 A
10 B
9 B
8 B
23 B
3 B
M–REL
BATT
+B
S1
S2
S3
SP2+
SP2–
E 9 B , E10 A
ENGINE CONTROL MODULE
(*1)
NSW
STA
IGSW
KS
VCC
THA
PS
E2
VTA1
IDL1
76 B
77 B
1 A
66 B
41 B
45 B
35 A
65 B
43 B
64 B
B–W
B
B–O
LG–B
L–R
P–L
BR–W
BR–B
Y
R
B–W
B
B–O
P 3
POWER STEERING PRESSURE SW
2
1
BR
E27
L–R
BR–B
E27
BR–B
E27
BR–B
LG–B
L–R
P–L
BR–B
L–R
Y
BR–B
R
3
4
2
1
4
3
1
2
V12
VOLUME AIR FLOW (AIR FLOW METER)
5
BR
BR
E27
BR
T 2
THROTTLE POSITION SENSOR

ELECTRONICALLY CONTROLLED TRANSMISSION AND A/T INDICATOR (FOR 2JZ–GE)

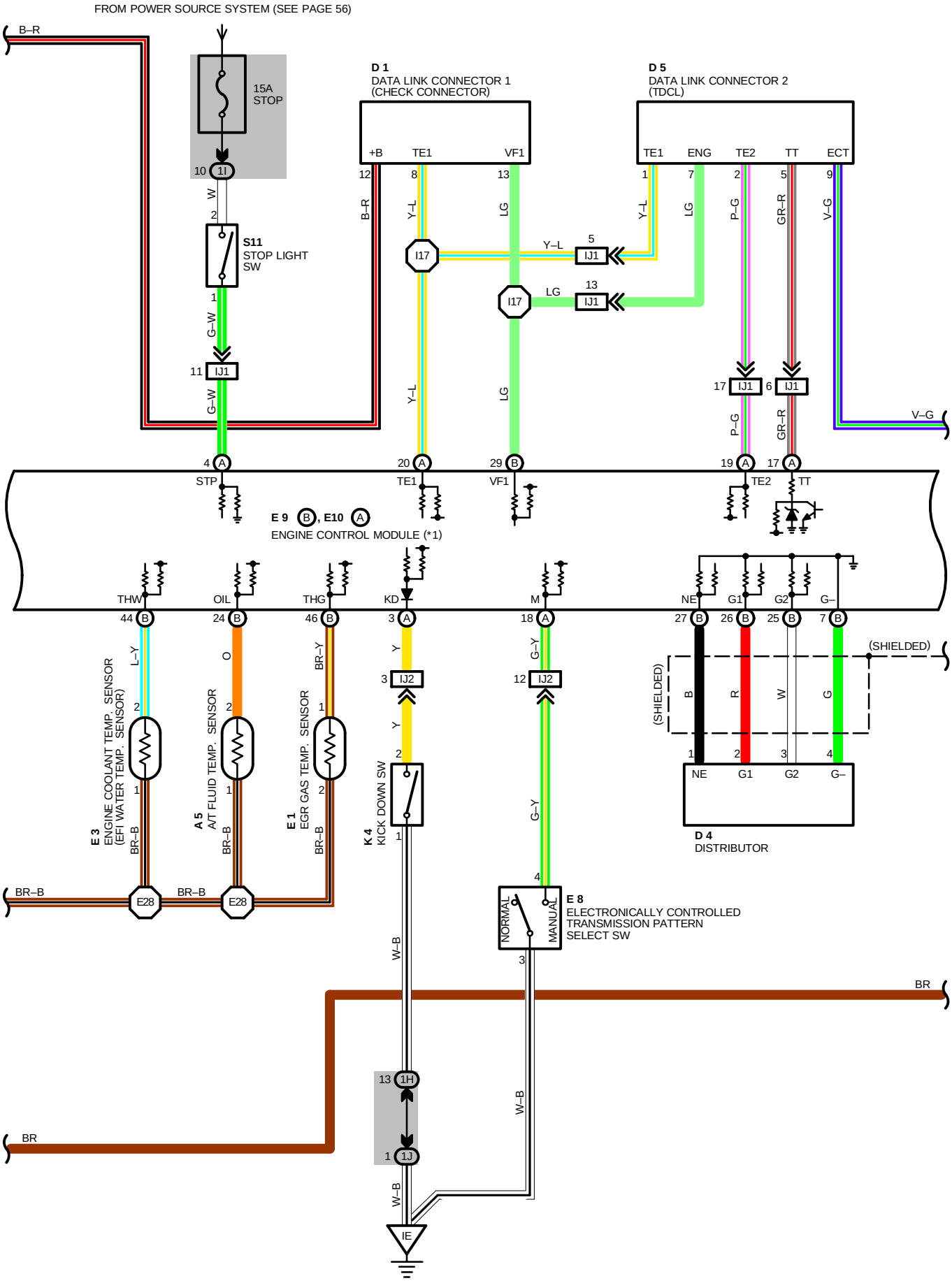

*1 : ENGINE AND ELECTRONICALLY CONTROLLED TRANSMISSION ECU

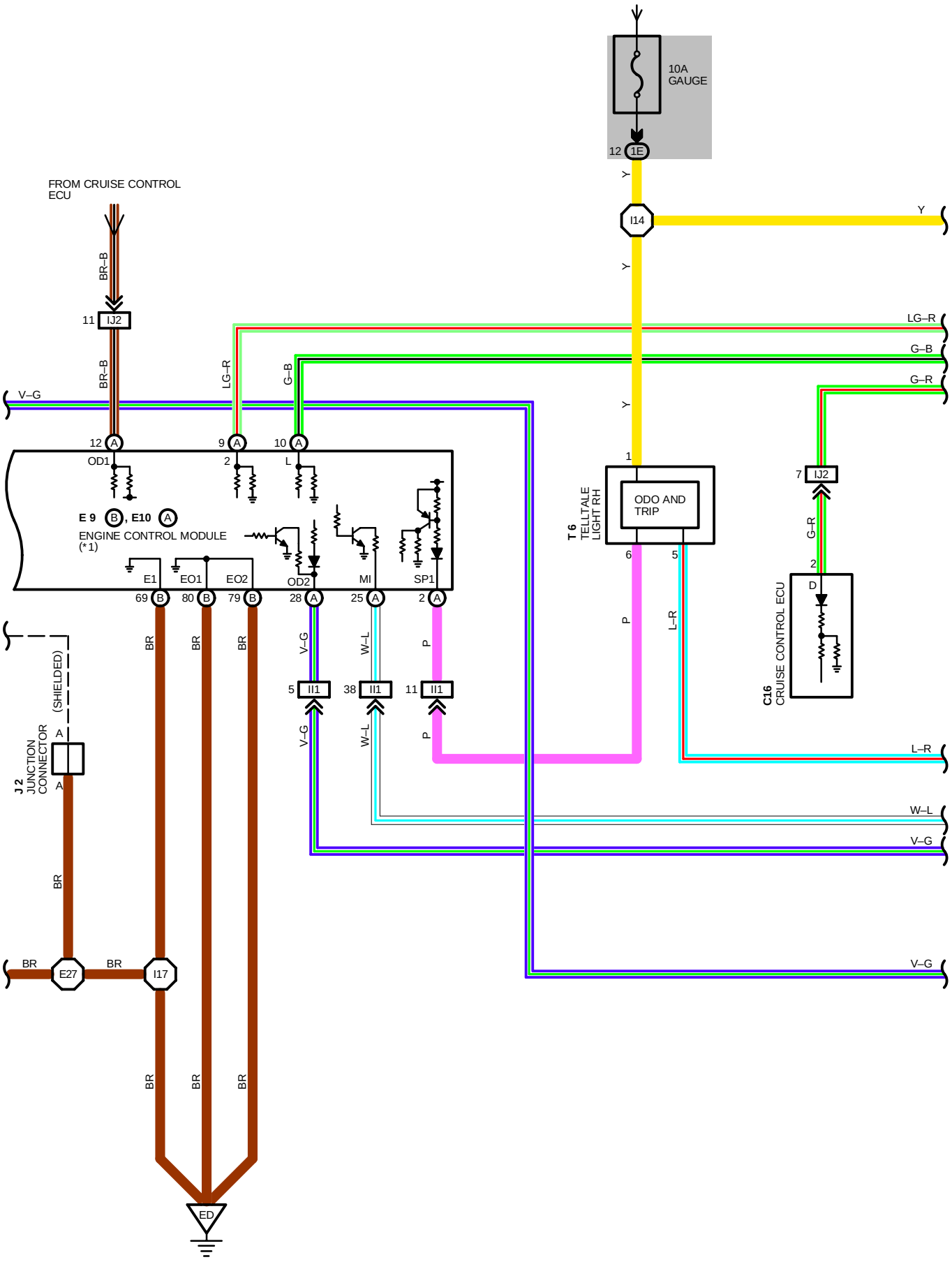

ELECTRONICALLY CONTROLLED TRANSMISSION AND A/T INDICATOR (FOR 2JZ–GE)

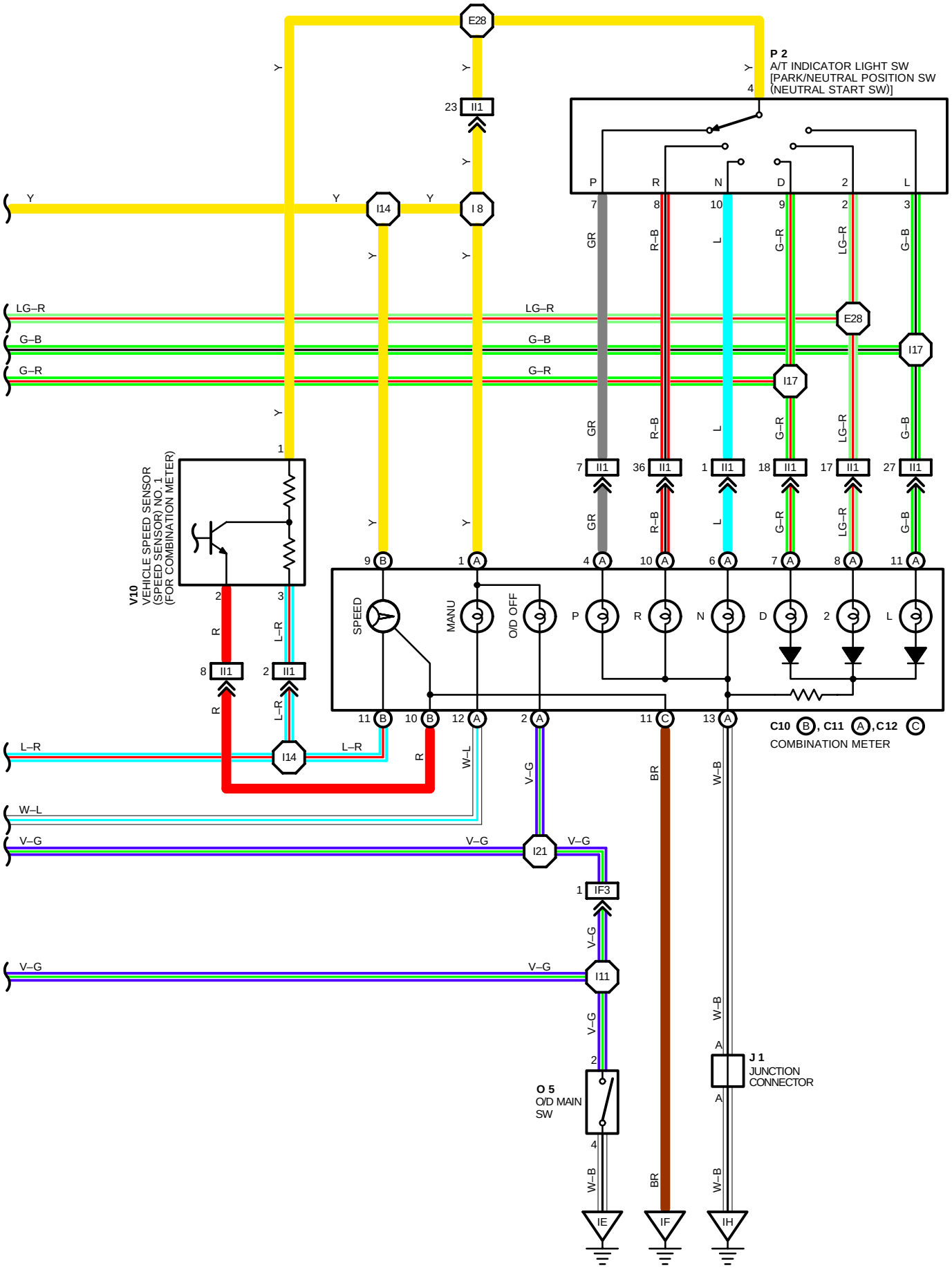

SYSTEM OUTLINE

THIS SYSTEM ELECTRICALLY CONTROLS THE LINE PRESSURE, THROTTLE PRESSURE, LOCK–UP PRESSURE AND ACCUMULATOR PRESSURE ETC. THROUGH THE SOLENOID VALVE. THE ELECTRONICALLY CONTROLLED TRANSMISSION IS A SYSTEM WHICH PRECISELY CONTROLS GEAR SHIFT TIMING AND LOCK–UP TIMING IN RESPONSE TO THE VEHICLE'S DRIVING CONDITIONS AND THE ENGINE OPERATING CONDITIONS DETECTED BY VARIOUS SENSORS, MAKING SMOOTH DRIVING POSSIBLE BY SHIFT SELECTION FOR EACH GEAR WHICH IS THE MOST APPROPRIATE TO THE DRIVING CONDITIONS AT THAT TIME, AND CONTROLS THE ENGINE TORQUE DURING SHIFTING TO ACHIEVE OPTIMUM SHIFT FEELING.

1. GEAR SHIFT OPERATION

WHEN DRIVING, THE ENGINE WARM UP CONDITION IS INPUT AS A SIGNAL TO **TERMINAL (B)44** OF THE ENGINE CONTROL MODULE (ENGINE AND ELECTRONICALLY CONTROLLED TRANSMISSION ECU) FROM THE ENGINE COOLANT TEMP. SENSOR (EFI WATER TEMP. SENSOR) AND THE VEHICLE SPEED SIGNAL FROM VEHICLE SPEED SENSOR (SPEED SENSOR) NO.2 IS INPUT TO **TERMINAL (B)23** OF THE ENGINE CONTROL MODULE (ENGINE AND ELECTRONICALLY CONTROLLED TRANSMISSION ECU). AT THE SAME TIME, THE THROTTLE VALVE OPENING SIGNAL FROM THE THROTTLE POSITION SENSOR IS INPUT TO **TERMINAL (B)43** OF THE ENGINE CONTROL MODULE (ENGINE AND ELECTRONICALLY CONTROLLED TRANSMISSION ECU) AS THROTTLE ANGLE SIGNAL.

BASED ON THESE SIGNALS, THE ENGINE CONTROL MODULE (ENGINE AND ELECTRONICALLY CONTROLLED TRANSMISSION ECU) SELECTS THE BEST SHIFT POSITION FOR DRIVING CONDITIONS AND SENDS CURRENT TO THE ELECTRONICALLY CONTROLLED TRANSMISSION SOLENOIDS. WHEN SHIFTING TO 1ST SPEED, THE CURRENT FLOWS FROM **TERMINAL (B)10** OF THE ENGINE CONTROL MODULE (ENGINE AND ELECTRONICALLY CONTROLLED TRANSMISSION ECU) → **TERMINAL 1** OF ELECTRONICALLY CONTROLLED TRANSMISSION SOLENOID → **GROUND** AND CONTINUITY TO NO. 1 SOLENOID CAUSES THE SHIFT (NO. 2 SOLENOID DOES NOT HAVE CONTINUITY AT THIS TIME).

FOR 2ND SPEED, THE CURRENT FLOWS SIMULTANEOUSLY FROM **TERMINAL (B)9** OF THE ENGINE CONTROL MODULE (ENGINE AND ELECTRONICALLY CONTROLLED TRANSMISSION ECU) → **TERMINAL 2** OF ELECTRONICALLY CONTROLLED TRANSMISSION SOLENOID → **GROUND**, AND FROM **TERMINAL (B)10** OF THE ENGINE CONTROL MODULE (ENGINE AND ELECTRONICALLY CONTROLLED TRANSMISSION ECU) → **TERMINAL 1** OF ELECTRONICALLY CONTROLLED TRANSMISSION SOLENOID → **GROUND**, AND CONTINUITY TO NO. 1 AND NO. 2 SOLENOIDS CAUSES THE SHIFT.

FOR 3RD SPEED, THERE IS NO CONTINUITY TO NO. 1 SOLENOID, ONLY TO NO. 2 SOLENOID, CAUSING THE SHIFT.

SHIFTING INTO THE 4TH SPEED (OVERDRIVE) OCCURS WHEN NO CURRENT FLOWS TO NO. 1 AND NO. 2 SOLENOIDS.

2. LOCK–UP OPERATION

WHEN THE ENGINE CONTROL MODULE (ENGINE AND ELECTRONICALLY CONTROLLED TRANSMISSION ECU) JUDGES FROM EACH SIGNAL THAT LOCK–UP OPERATION CONDITIONS HAVE BEEN MET, CURRENT FLOWS FROM **TERMINAL (B)8** OF THE ENGINE CONTROL MODULE (ENGINE AND ELECTRONICALLY CONTROLLED TRANSMISSION ECU) → **TERMINAL 3** OF THE ELECTRONICALLY CONTROLLED TRANSMISSION SOLENOID → **GROUND,** CAUSING CONTINUITY TO THE LOCK–UP SOLENOID AND CAUSING LOCK–UP OPERATION.

3. STOP LIGHT SW CIRCUIT

IF THE BRAKE PEDAL IS DEPRESSED (STOP LIGHT SW ON) WHEN DRIVING IN LOCK–UP CONDITION, A SIGNAL IS INPUT TO **TERMINAL (A)4** OF THE ENGINE CONTROL MODULE (ENGINE AND ELECTRONICALLY CONTROLLED TRANSMISSION ECU). THE ENGINE CONTROL MODULE (ENGINE AND ELECTRONICALLY CONTROLLED TRANSMISSION ECU) OPERATES AND CUTS THE CURRENT TO THE SOLENOID TO RELEASE LOCK–UP.

4. OVERDRIVE CIRCUIT

***** O/D MAIN SW ON

WHEN THE O/D MAIN SW IS TURNED ON (SW POINT IS OPEN), A SIGNAL IS INPUT TO **TERMINAL (A)28** OF THE ENGINE CONTROL MODULE (ENGINE AND ELECTRONICALLY CONTROLLED TRANSMISSION ECU) AND THE ELECTRONICALLY CONTROLLED TRANSMISSION CAUSES SHIFT TO OVERDRIVE WHEN THE CONDITIONS FOR OVERDRIVE ARE MET.

***** O/D MAIN SW OFF

WHEN THE O/D MAIN SW IS TURNED OFF (SW POINT IS CLOSED), THE CURRENT FLOWING THROUGH THE O/D OFF INDICATOR LIGHT FLOWS TO **GROUND** BY WAY OF THE O/D MAIN SW AND CAUSES THE O/D OFF INDICATOR LIGHT TO LIGHT UP. AT THE SAME TIME, A SIGNAL IS INPUT TO **TERMINAL (A)28** OF THE ENGINE CONTROL MODULE (ENGINE AND ELECTRONICALLY CONTROLLED TRANSMISSION ECU) AND THE ELECTRONICALLY CONTROLLED TRANSMISSION PREVENTS SHIFT INTO OVERDRIVE.

5. ELECTRONICALLY CONTROLLED TRANSMISSION PATTERN SELECT SW CIRCUIT

WHEN THE ELECTRONICALLY CONTROLLED TRANSMISSION PATTERN SELECT SW IS SWICHED FROM NORMAL TO MANUAL, A SIGNAL IS INPUT TO **TERMINAL (A)18** OF THE ENGINE CONTROL MODULE (ENGINE AND ELECTRONICALLY CONTROLLED TRANSMISSION ECU). INPUT OF THIS SIGNAL CAUSES CURRENT TO FLOW FROM THE **GAUGE** FUSE TO **TERMINAL (A)1** OF COMBINATION METER → **TERMINAL (A)12** → **TERMINAL (A)25** OF ENGINE CONTROL MODULE (ENGINE AND ELECTRONICALLY CONTROLLED TRANSMISSION ECU) → **GROUND**, LIGHTING UP THE INDICATOR LIGHT. IF THE A/T SHIFT LEVER IS THEN SHIFTED TO **"2"** POSITION, THE ENGINE CONTROL MODULE (ENGINE AND ELECTRONICALLY CONTROLLED TRANSMISSION ECU) ENABLES THE VEHICLE TO START OFF WITH THE TRANSMISSION IN 2ND GEAR, THUS PERMITTING EASING STARTING OFF AND DRIVING ON SLIPPERY ROADS.

6. CRUISE CONTROL

WHEN CRUISE CONTROL OPERATION IS SELECTED A SIGNAL IS INPUT TO **TERMINAL (A)12** OF THE ENGINE CONTROL MODULE (ENGINE AND ELECTRONICALLY CONTROLLED TRANSMISSION ECU) FROM CRUISE CONTROL ECU. AS A RESULT, THE ENGINE CONTROL MODULE (ENGINE AND ELECTRONICALLY CONTROLLED TRANSMISSION ECU) OPERATES AND CONTROLS OVERDRIVE, LOCK–UP AND SO ON FOR SMOOTH DRIVING.

ELECTRONICALLY CONTROLLED TRANSMISSION AND A/T INDICATOR (FOR 2JZ–GE)

SERVICE HINTS

E 2 ELECTRONICALLY CONTROLLED TRANSMISSION SOLENOID
1, 2, 3– GROUND : EACH 11–15

E 3 ENGINE COOLANT TEMP. SENSOR (EFI WATER TEMP. SENSOR)
1– 2 : **10–20** K (**–20**˚C, **–4**˚F)
4– 7 K (**0**˚C, **32**˚F)
2– 3 K (**20**˚C, **68**˚F)
0.9–1.3 K (**40**˚C, **104**˚F)
0.4–0.7 K (**60**˚C, **140**˚F)
0.2–0.4 K (**80**˚C, **176**˚F)

E 9(B), E10(A) ENGINE CONTROL MODULE (ENGINE AND ELECTRONICALLY CONTROLLED TRANSMISSION ECU)
BATT–E1 : ALWAYS **9–14** VOLTS
IGSW–E1: **9–14** VOLTS WITH IGNITION SW ON
+B–E1 : **9–14** VOLTS WITH IGNITION SW ON
IDL1–E1: **0 –1.5** VOLTS WITH IGNITION SW ON AND THROTTLE VALVE FULLY CLOSED
9–14 VOLTS WITH IGNITION SW ON AND THROTTLE VALVE FULLY OPEN
VTA1–E1:**0.3– 0.8** VOLTS WITH IGNITION SW ON AND THROTTLE VALVE FULLY CLOSED
3.2–4.9 VOLTS WITH IGNITION SW ON AND THROTTLE VALVE FULLY OPEN
STA–E1: **6–14** VOLTS WITH ENGINE CRANKING
M–REL–E1 : **9–14** VOLTS WITH IGNITION SW ON
VCC–E1: 4.5–5.5 VOLTS WITH IGNITION SW ON
L–E1 : APPROX. **7.5– 14.0** VOLTS WITH SHIFT LEVER AT **“L”** POSITION
2–E1 : APPROX. **7.5– 14.0** VOLTS WITH SHIFT LEVER AT **“2”** POSITION

V11 VEHICLE SPEED SENSOR (SPEED SENSOR) NO. 2 (FOR ELECTRONICALLY CONTROLLED TRANSMISSION)
1–2 : APPROX. **620**

E 8 ELECTRONICALLY CONTROLLED TRANSMISSION PATTERN SELECT SW
4–3 : CLOSED WITH ELECTRONICALLY CONTROLLED TRANSMISSION PATTERN SELECT SW AT **MANUAL** POSITION

: PARTS LOCATION

CODE	SEE PAGE	CODE	SEE PAGE	CODE	SEE PAGE
A 5	26 (2JZ–GE)	**E 2**	26 (2JZ–GE)	**O 5**	29
C10 B	28	**E 3**	26 (2JZ–GE)	**P 2**	27 (2JZ–GE)
C11 A	28	**E 8**	29	**P 3**	27 (2JZ–GE)
C12 C	28	**E 9** B	29	**S11**	29
C16	28	**E10** A	29	**T 2**	27 (2JZ–GE)
D 1	26 (2JZ–GE)	**I19**	29	**T 6**	29
D 4	26	**J 1**	29	**V10**	27 (2JZ–GE)
D 5	28	**J 2**	29	**V11**	27 (2JZ–GE)
E 1	26 (2JZ–GE)	**K 4**	29	**V12**	27

: RELAY BLOCKS

CODE	SEE PAGE	RELAY BLOCKS (RELAY BLOCK LOCATION)
2	22	R/B NO. 2 (ENGINE COMPARTMENT LEFT)

: JUNCTION BLOCK AND WIRE HARNESS CONNECTOR

CODE	SEE PAGE	JUNCTION BLOCK AND WIRE HARNESS (CONNECTOR LOCATION)
1B	20	ENGINE ROOM MAIN WIRE AND J/B NO. 1 (LEFT KICK PANEL)
1E	20	INSTRUMENT PANEL WIRE AND J/B NO.1 (LEFT KICK PANEL)
1H	20	COWL WIRE AND J/B NO.1 (LEFT KICK PANEL)
1I		
1J		
1K		
2A	22	BATTERY AND J/B NO.2 (ENGINE COMPARTMENT LEFT)

: CONNECTOR JOINING WIRE HARNESS AND WIRE HARNESS

CODE	SEE PAGE	JOINING WIRE HARNESS AND WIRE HARNESS (CONNECTOR LOCATION)
EA1	34 (2JZ–GE)	ENGINE WIRE AND ENGINE ROOM MAIN WIRE (NEAR THE R/B NO. 2)
EA3	34	
IB1	36	ENGINE ROOM MAIN WIRE AND COWL WIRE (LEFT KICK PANEL)
IF3	36	INSTRUMENT PANEL WIRE AND COWL WIRE (RIGHT KICK PANEL)
II1	38	ENGINE WIRE AND INSTRUMENT PANEL WIRE (RIGHT KICK PANEL)
IJ1	38	ENGINE WIRE AND COWL WIRE (RIGHT KICK PANEL)
IJ2		

: GROUND POINTS

CODE	SEE PAGE	GROUND POINTS LOCATION
EB	34 (2JZ–GE)	FRONT SIDE OF LEFT FENDER
ED	34 (2JZ–GE)	REAR SIDE OF INTAKE MANIFOLD
IE	36	LEFT KICK PANEL
IF		
IH	36	RIGHT KICK PANEL

: SPLICE POINTS

CODE	SEE PAGE	WIRE HARNESS WITH SPLICE POINTS	CODE	SEE PAGE	WIRE HARNESS WITH SPLICE POINTS
E20	34	ENGINE WIRE	**I11**	38	COWL WIRE
E25			**I14**	38	INSTRUMENT PANEL WIRE
E27			**I17**	38	ENGINE WIRE
E28			**I21**	38	INSTRUMENT PANEL WIRE
I 8	38	INSTRUMENT PANEL WIRE			

A 5 GRAY

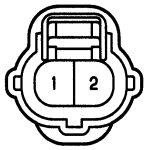

C10 (B) BLUE

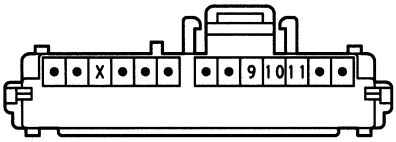

C11 (A) BROWN

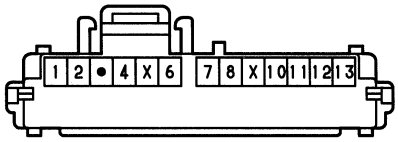

C12 (C)

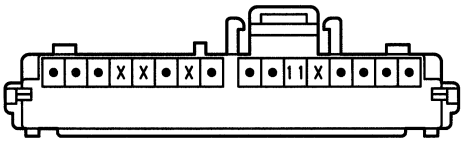

C16 GREEN

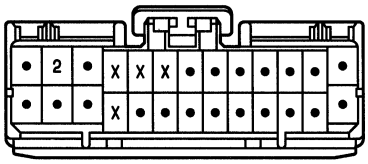

D 1 BLACK

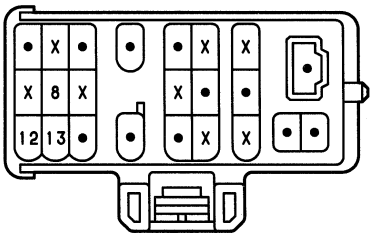

D 4 BLACK



D 5 DARK GRAY

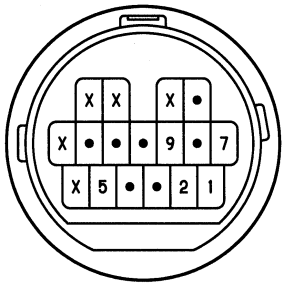

E 1 DARK GRAY



E 2 BLACK

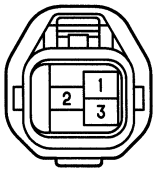

E 3 GREEN



E 8

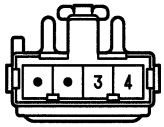

E 9 (B) DARK GRAY

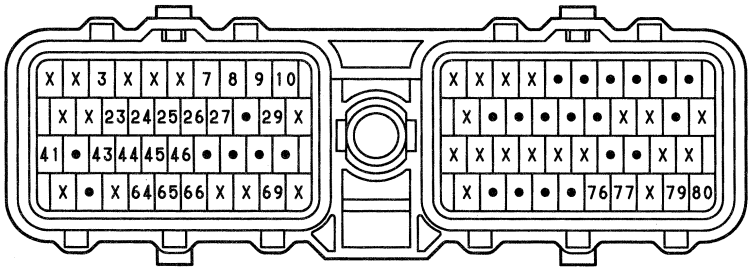

E10 (A) DARK GRAY

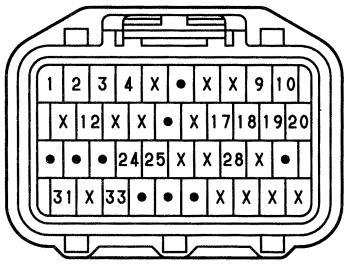

I19

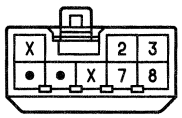

J 1

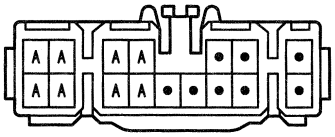

(HINT:SEE PAGE 7)

J 2

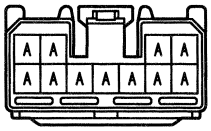

(HINT:SEE PAGE 7)

K 4 BLACK



O 5 BLUE

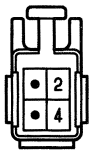

P 2 GRAY

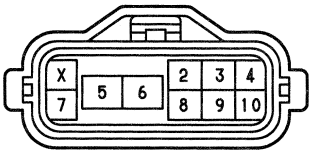

S11 BLUE

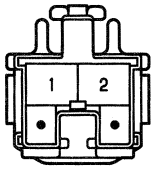

T 2 BLACK

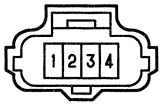

T 6

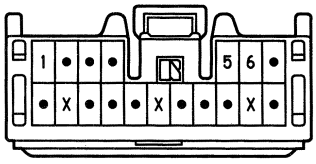

V10 BLACK



V11 BLACK



V12 BLACK



A 6 (A) BLACK



A 7 (B) GRAY



A 8 (A) GRAY

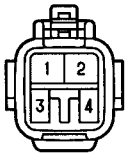

A 9 (B) GRAY

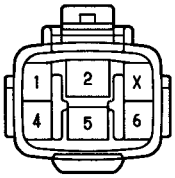

A10 GRAY



A11 GRAY



A18 (B)

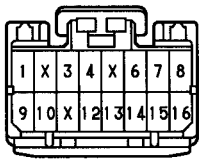

A19 (A)

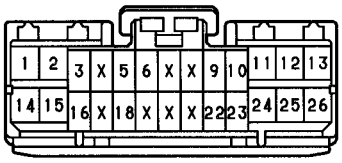

A23

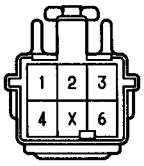

A31 GRAY



A32 GRAY

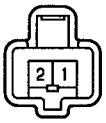

C10 (A) BLUE

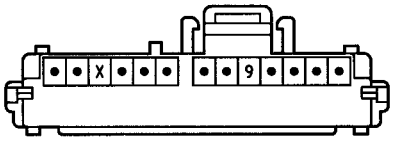

C12 (B)

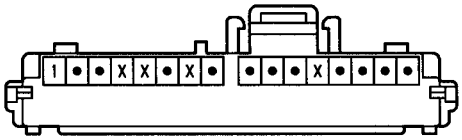

D 1 BLACK

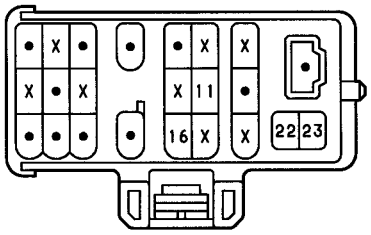

(A/T) D 5 DARK GRAY

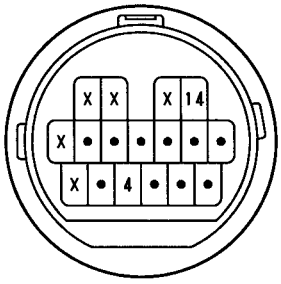

(M/T) D 5 DARK GRAY

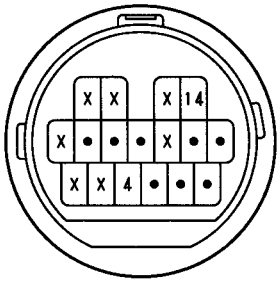

P 5



S11 BLUE

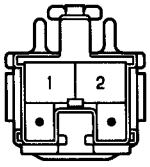

T 5

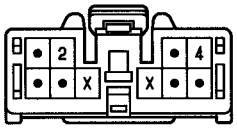

ABS (ANTI–LOCK BRAKE SYSTEM)

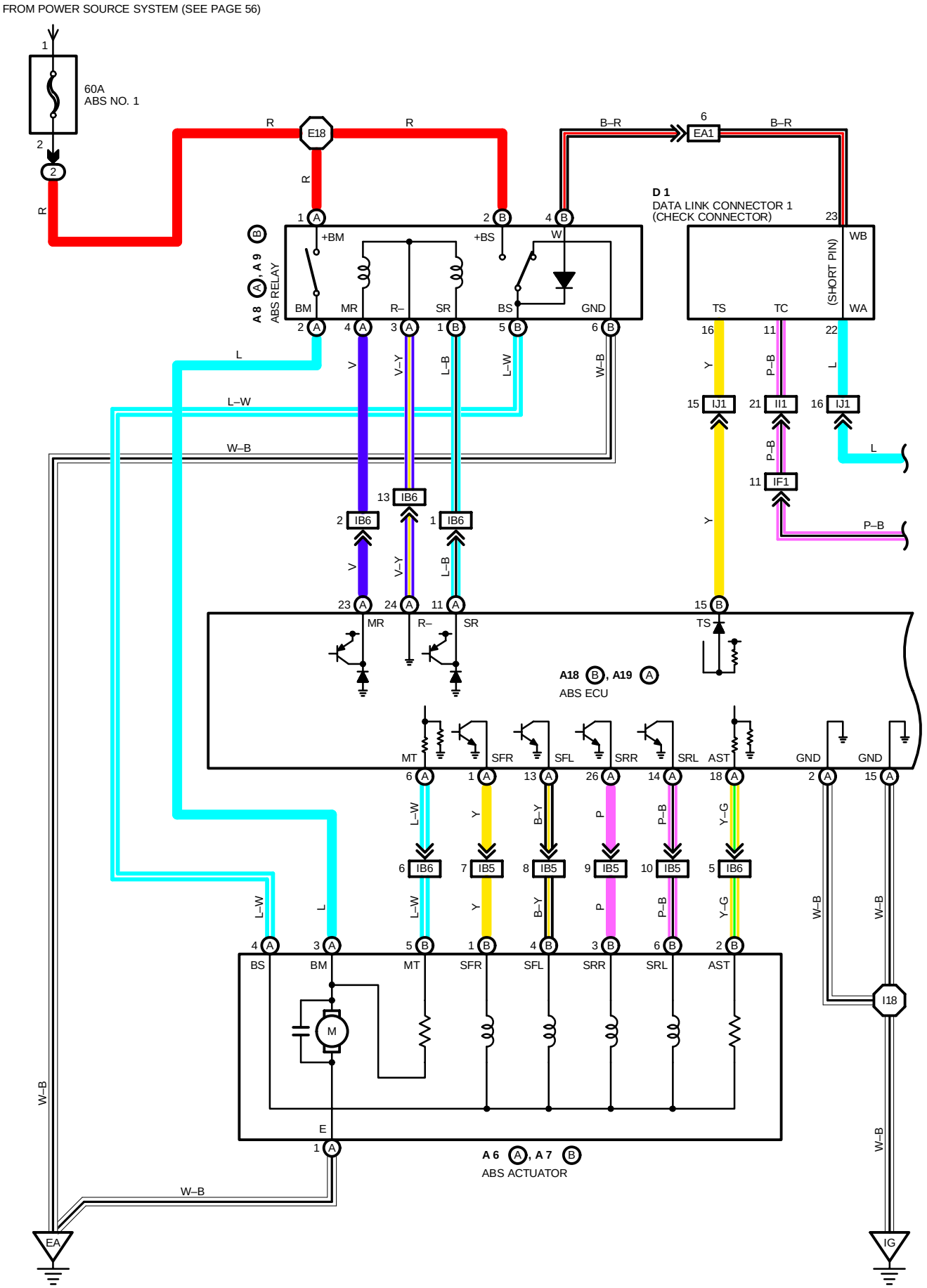

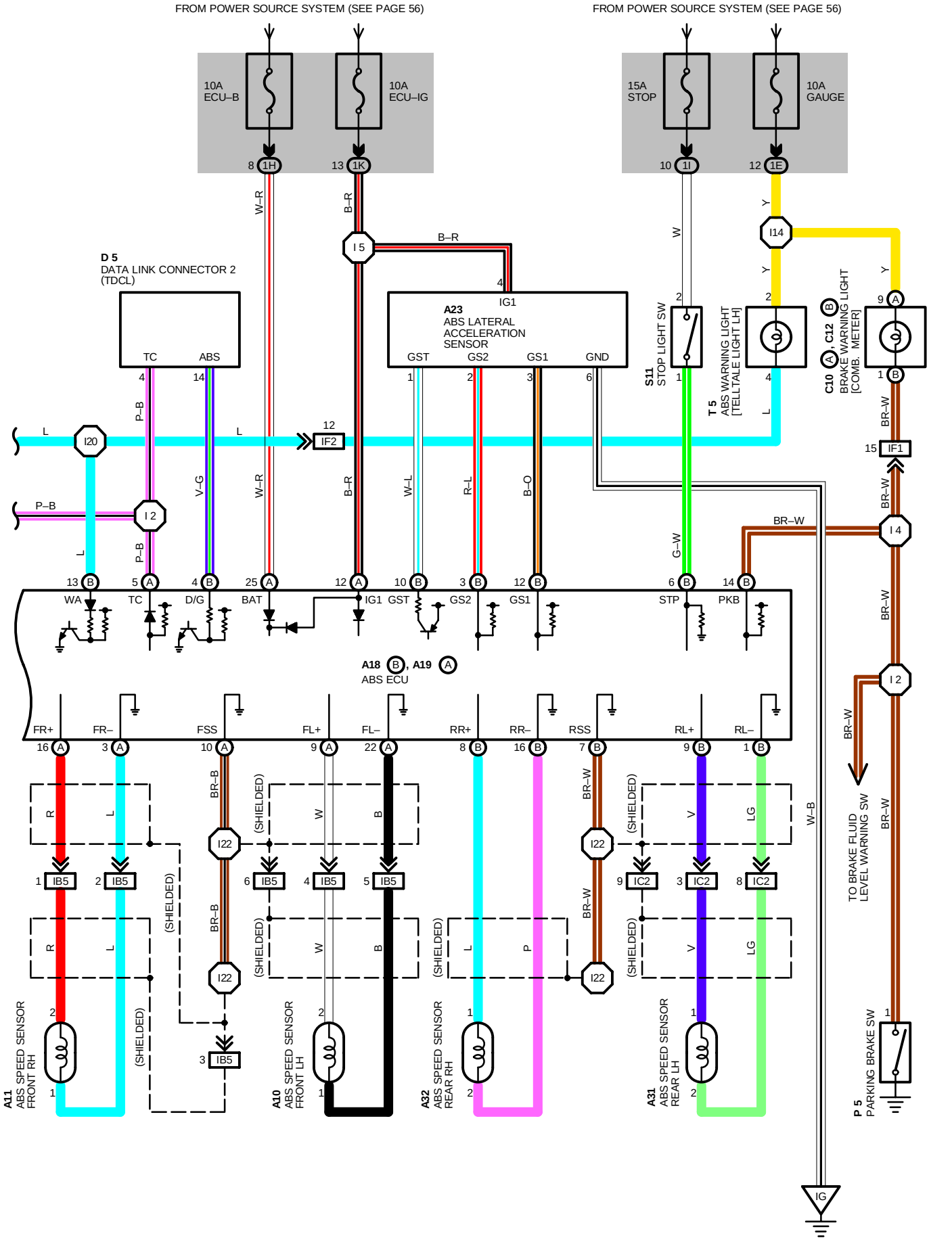
FROM POWER SOURCE SYSTEM (SEE PAGE 56)
FROM POWER SOURCE SYSTEM (SEE PAGE 56)
10A ECU–B
10A ECU–IG
15A STOP
10A GAUGE
8 1H
13 1K
10 1I
12 1E
W–R
B–R
B–R
W
Y
I 5
I14
D 5
DATA LINK CONNECTOR 2 (TDCL)
TC
ABS
A23
ABS LATERAL ACCELERATION SENSOR
IG1
GST
GS2
GS1
GND
S11
STOP LIGHT SW
T 5
ABS WARNING LIGHT [TELLTALE LIGHT LH]
C10 , C12
BRAKE WARNING LIGHT [COMB. METER]
P–B
V–G
W–R
B–R
W–L
R–L
B–O
G–W
BR–W
L
I20
I 2
IF2
IF1
I 4
WA
TC
D/G
BAT
IG1
GST
GS2
GS1
STP
PKB
A18 B , A19 A
ABS ECU
FR+
FR–
FSS
FL+
FL–
RR+
RR–
RSS
RL+
RL–
BR–B
(SHIELDED)
W
B
L
P
V
LG
R
IB5
I22
IC2
W–B
IG
TO BRAKE FLUID LEVEL WARNING SW
A11
ABS SPEED SENSOR FRONT RH
A10
ABS SPEED SENSOR FRONT LH
A32
ABS SPEED SENSOR REAR RH
A31
ABS SPEED SENSOR REAR LH
P 5
PARKING BRAKE SW

ABS (ANTI–LOCK BRAKE SYSTEM)

SYSTEM OUTLINE

THIS SYSTEM CONTROLS THE RESPECTIVE BRAKE FLUID PRESSURES ACTING ON THE DISC BRAKE CYLINDERS OF THE RIGHT FRONT WHEEL, LEFT FRONT WHEEL, RIGHT REAR WHEEL AND LEFT REAR WHEEL WHEN THE BRAKES ARE APPLIED IN A PANIC STOP SO THAT THE WHEELS DO NOT LOCK.

THIS RESULTS IN IMPROVED DIRECTIONAL STABILITY AND STEERABILITY DURING PANIC BRAKING.

1. INPUT SIGNALS

(1) SPEED SENSOR SIGNAL
THE SPEED OF THE WHEELS IS DETECTED AND INPUT TO **TERMINALS FL+, FR+, RL+** AND **RR+** OF THE ABS ECU.

(2) STOP LIGHT SW SIGNAL
A SIGNAL IS INPUT TO **TERMINAL STP** OF THE ABS ECU WHEN THE BRAKE PEDAL IS DEPRESSED.

(3) PARKING BRAKE SW SIGNAL
A SIGNAL IS INPUT TO **TERMINAL PKB** OF THE ABS ECU WHEN THE PARKING BRAKE LEVER IS PULLED UP.

(4) DECELERATION SENSOR SIGNAL
LATERAL ACCELERATION IS DETECTED AND INPUT TO THE ABS ECU.

2. SYSTEM OPERATION

DURING SUDDEN BRAKING, THE ABS ECU WHICH HAS SIGNALS INPUT FROM EACH SENSOR CONTROLS THE CURRENT FLOWING TO THE SOLENOID INSIDE THE ACTUATOR AND LETS THE HYDRAULIC PRESSURE ACTING ON EACH WHEEL CYLINDER ESCAPE TO THE RESERVOIR.

THE PUMP INSIDE THE ACTUATOR IS ALSO OPERATING AT THIS TIME AND IT RETURNS THE BRAKE FLUID FROM THE RESERVOIR TO THE MASTER CYLINDER, THUS PREVENTING LOCKING OF THE VEHICLE WHEELS.

IF THE ECU JUDGES THAT THE HYDRAULIC PRESSURE ACTING ON THE WHEEL CYLINDER IS INSUFFICIENT, THE CURRENT ACTING ON SOLENOID IS CONTROLLED AND THE HYDRAULIC PRESSURE IS INCREASED.

HOLDING OF THE HYDRAULIC PRESSURE IS ALSO CONTROLLED BY THE ECU, BY THE SAME METHOD AS ABOVE. BY REPEATED PRESSURE REDUCTION, HOLDING AND INCREASE ARE REPEATED TO MAINTAIN VEHICLE STABILITY AND TO IMPROVE STEERABILITY DURING SUDDEN BRAKING.

SERVICE HINTS

A 6(A), A 7(B) ABS ACTUATOR
(A) 1–GROUND : ALWAYS CONTINUOUS
(B) 1, **(B)** 3, **(B)** 4, **(B)** 6–GROUND : APPROX. **1.20** (IGNITION SW OFF)
(B) 2–**(A)** 4: **4–6** (IGNITION SW OFF)

A10, A11, A31, A32 ABS SPEED SENSOR FRONT LH, RH, REAR LH, RH
1–2: **0.8–1.3** K (**20**˚C, **68**˚F)

A18 (B), A19(A) ABS ECU
(A)12–GROUND : **10–14** VOLTS WITH IGNITION SW ON
(A) 2, **(A)15**–GROUND: ALWAYS CONTINUOUS
(A)25–GROUND : ALWAYS **10–14** VOLTS
(A)1, **(A)**13, **(A)**14,**(A)26**,–GROUND: **10–14** VOLTS WITH IGNITION SW ON
(B)14–GROUND : CONTINUITY WITH PARKING BRAKE LEVEL PULLED UP
(B) 6–GROUND :**10–14** VOLTS WITH STOP LIGHT SW ON (BRAKE PEDAL DEPRESSED)

P 5 PARKING BRAKE SW
1–GROUND: CLOSED WITH PARKING BRAKE LEVER PULLED UP

S11 STOP LIGHT SW
1–2: CLOSED WITH BRAKE PEDAL DEPRESSED

: PARTS LOCATION

CODE		SEE PAGE	CODE		SEE PAGE	CODE		SEE PAGE
A 6	A	26 (2JZ–GE)	**A18**	B	28	**C12**	B	28
A 7	B	26 (2JZ–GE)	**A19**	A	28	**D 1**		26 (2JZ–GE)
A 8	A	26	**A23**		28	**D 5**		28
A 9	B	26	**A31**		30	**P 5**		29
A10		26 (2JZ–GE)	**A32**		30	**S11**		29
A11		26 (2JZ–GE)	**C10**	A	28	**T 5**		29

: RELAY BLOCKS

CODE	SEE PAGE	RELAY BLOCKS (RELAY BLOCK LOCATION)
2	22	R/B NO. 2 (ENGINE COMPARTMENT LEFT)

: JUNCTION BLOCK AND WIRE HARNESS CONNECTOR

CODE	SEE PAGE	JUNCTION BLOCK AND WIRE HARNESS (CONNECTOR LOCATION)
1E	20	INSTRUMENT PANEL WIRE AND J/B NO.1 (LEFT KICK PANEL)
1H	20	COWL WIRE AND J/B NO.1 (LEFT KICK PANEL)
1I		
1K		

: CONNECTOR JOINING WIRE HARNESS AND WIRE HARNESS

CODE	SEE PAGE	JOINING WIRE HARNESS AND WIRE HARNESS (CONNECTOR LOCATION)
EA1	34 (2JZ–GE)	ENGINE WIRE AND ENGINE ROOM MAIN WIRE (NEAR THE R/B NO. 2)
IB5	36	ENGINE ROOM MAIN WIRE AND COWL WIRE (RIGHT KICK PANEL)
IB6		
IC2	36	FLOOR NO. 2 WIRE AND COWL WIRE (LEFT KICK PANEL)
IF1	36	INSTRUMENT PANEL WIRE AND COWL WIRE (INSTRUMENT PANEL REINFORCEMENT LH)
IF2		
II1	38	ENGINE WIRE AND INSTRUMENT PANEL WIRE (RIGHT KICK PANEL)
IJ1	38	ENGINE WIRE AND COWL WIRE (RIGHT KICK PANEL)

: GROUND POINTS

CODE	SEE PAGE	GROUND POINTS LOCATION
EA	34 (2JZ–GE)	FRONT SIDE OF RIGHT FENDER
IG	36	RIGHT KICK PANEL

: SPLICE POINTS

CODE	SEE PAGE	WIRE HARNESS WITH SPLICE POINTS	CODE	SEE PAGE	WIRE HARNESS WITH SPLICE POINTS
E18	34	ENGINE ROOM MAIN WIRE	**I14**	38	INSTRUMENT PANEL WIRE
I 2	38	COWL WIRE	**I18**	38	COWL WIRE
I 4			**I20**		
I 5	38	INSTRUMENT PANEL WIRE	**I22**		

ABS AND TRACTION CONTROL

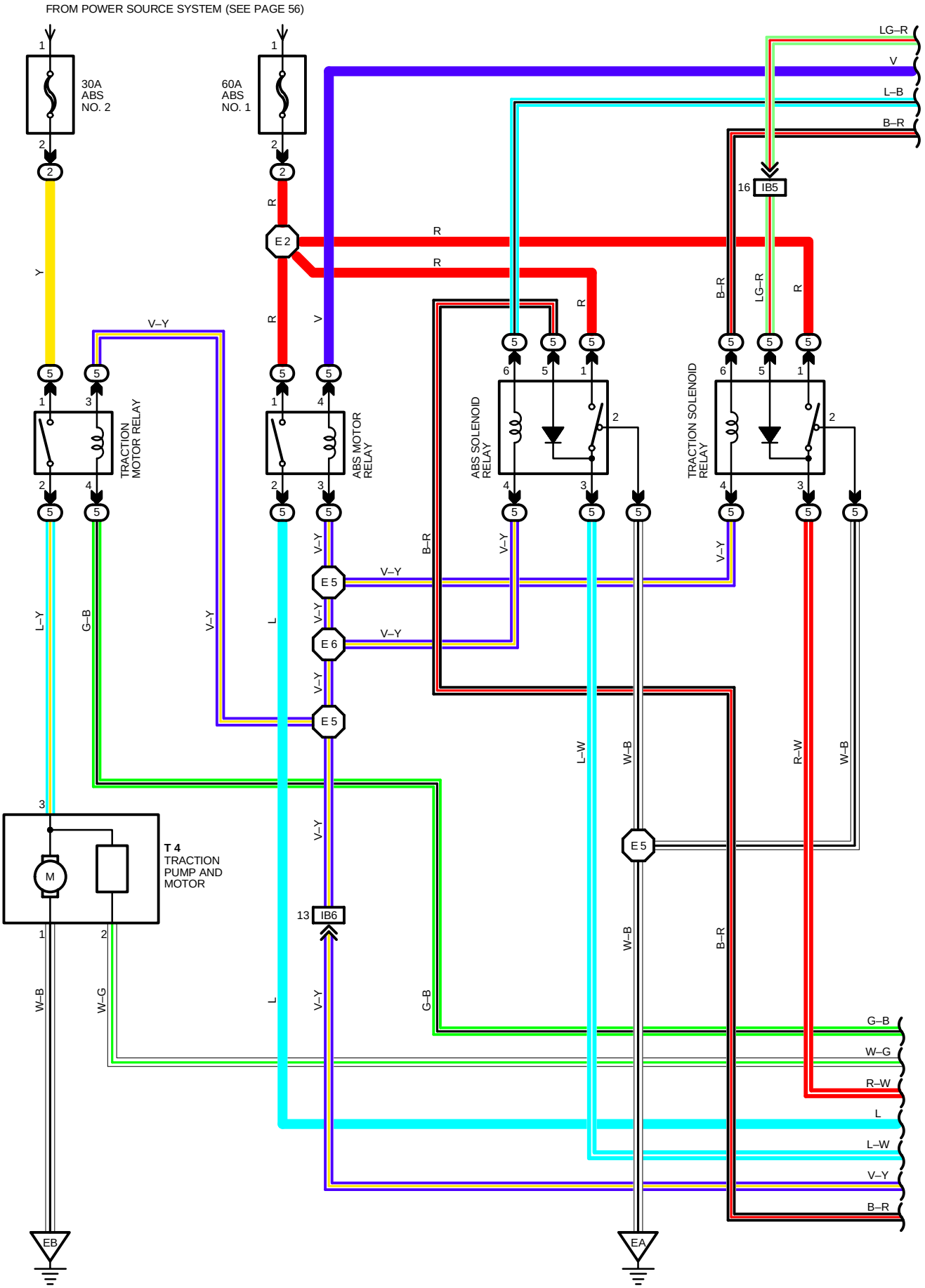

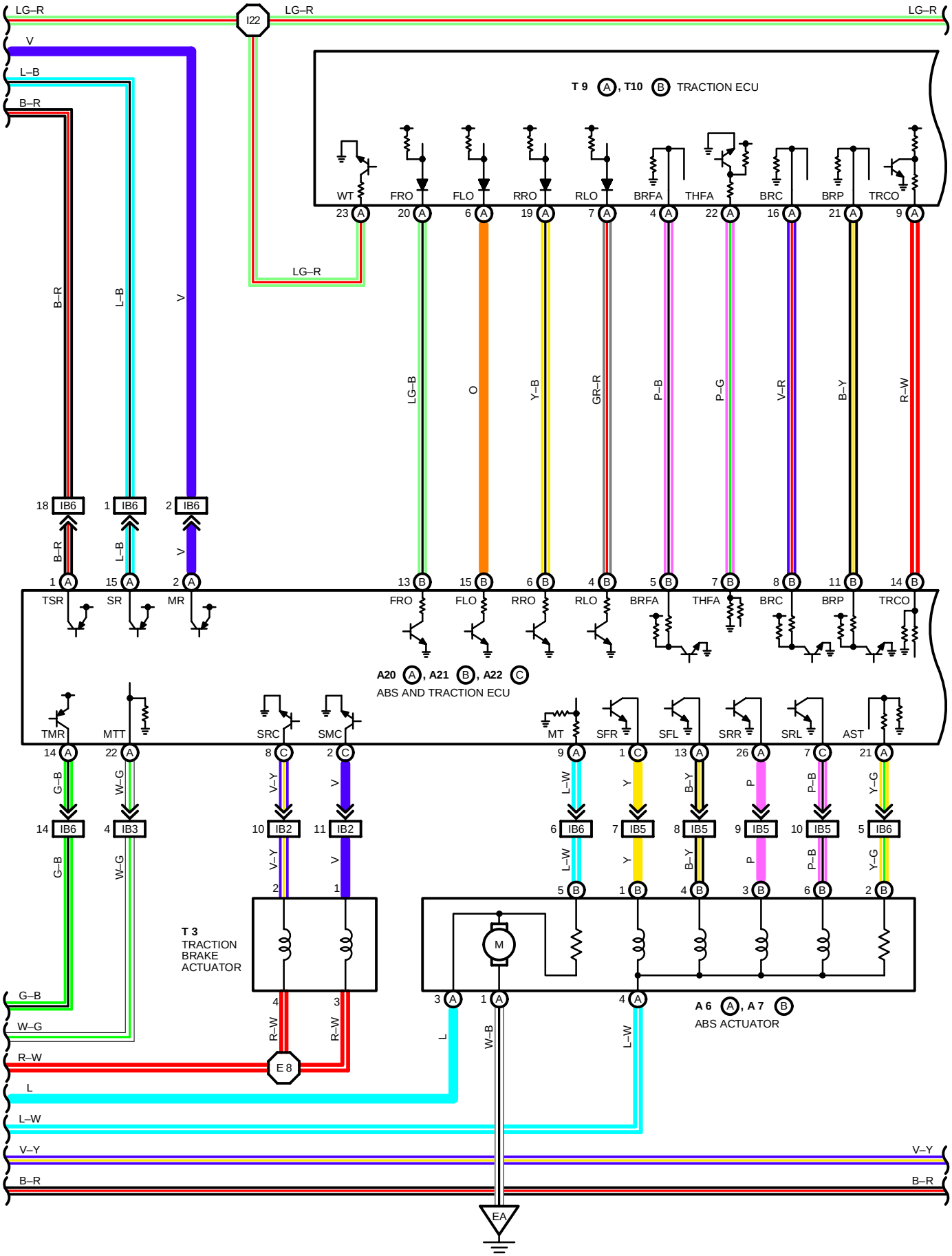
LG–R
I22
LG–R
LG–R
V
L–B
B–R
T 9 A, T10 B TRACTION ECU
WT
FRO
FLO
RRO
RLO
BRFA
THFA
BRC
BRP
TRCO
23 A
20 A
6 A
19 A
7 A
4 A
22 A
16 A
21 A
9 A
LG–R
B–R
L–B
V
LG–B
O
Y–B
GR–R
P–B
P–G
V–R
B–Y
R–W
18 IB6
1 IB6
2 IB6
1 A
15 A
2 A
13 B
15 B
6 B
4 B
5 B
7 B
8 B
11 B
14 B
TSR
SR
MR
FRO
FLO
RRO
RLO
BRFA
THFA
BRC
BRP
TRCO
A20 A, A21 B, A22 C
ABS AND TRACTION ECU
TMR
MTT
SRC
SMC
MT
SFR
SFL
SRR
SRL
AST
14 A
22 A
8 C
2 C
9 A
1 C
13 A
26 A
7 C
21 A
G–B
W–G
V–Y
V
L–W
Y
B–Y
P
P–B
Y–G
14 IB6
4 IB3
10 IB2
11 IB2
6 IB6
7 IB5
8 IB5
9 IB5
10 IB5
5 IB6
T 3
TRACTION
BRAKE
ACTUATOR
2
1
5 B
1 B
4 B
3 B
6 B
2 B
M
4
3
3 A
1 A
4 A
A 6 A, A 7 B
ABS ACTUATOR
G–B
W–G
R–W
L
L–W
V–Y
B–R
E 8
L
W–B
L–W
V–Y
B–R
EA

ABS AND TRACTION CONTROL

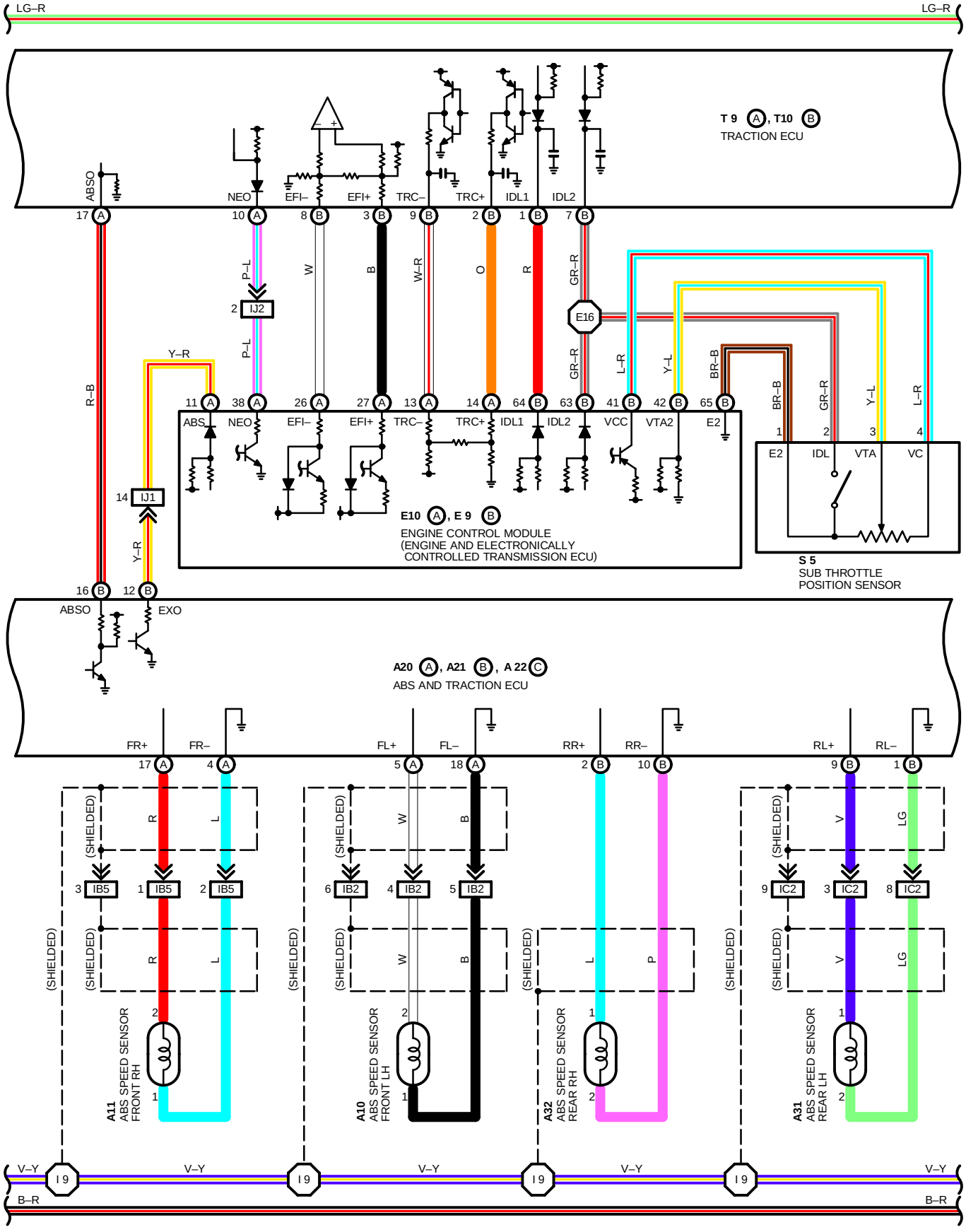

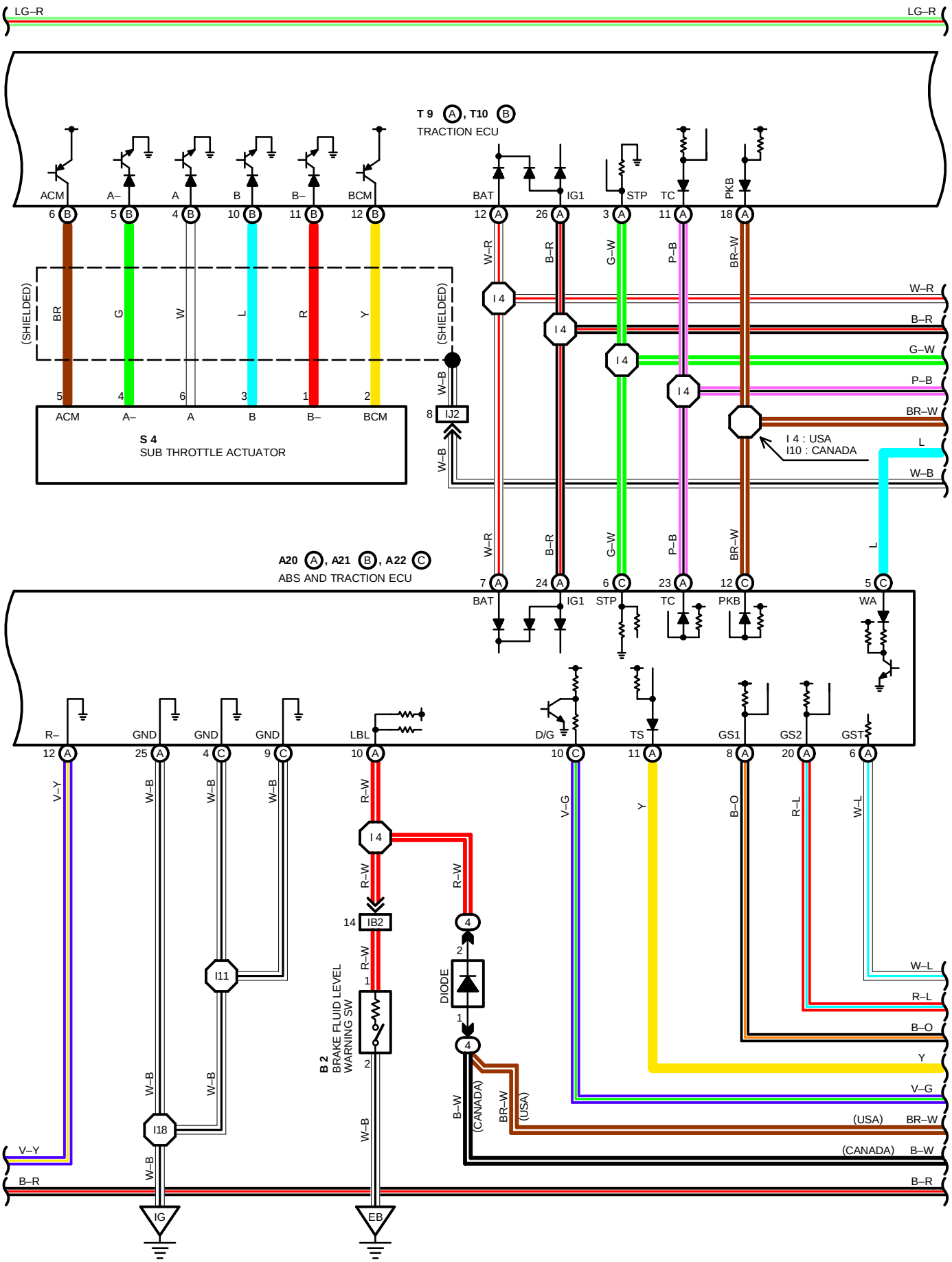
LG–R
LG–R
T 9 A, T10 B
TRACTION ECU
ACM
A–
A
B
B–
BCM
BAT
IG1
STP
TC
PKB
6 B
5 B
4 B
10 B
11 B
12 B
12 A
26 A
3 A
11 A
18 A
W–R
B–R
G–W
P–B
BR–W
L
W–B
(SHIELDED)
BR
G
W
L
R
Y
5
4
6
3
1
2
ACM
A–
A
B
B–
BCM
S 4
SUB THROTTLE ACTUATOR
8 IJ2
I 4
I 4 : USA
I10 : CANADA
A20 A, A21 B, A22 C
ABS AND TRACTION ECU
7 A
24 A
6 C
23 A
12 C
5 C
BAT
IG1
STP
TC
PKB
WA
R–
GND
GND
GND
LBL
D/G
TS
GS1
GS2
GST
12 A
25 A
4 C
9 C
10 A
10 C
11 A
8 A
20 A
6 A
V–Y
W–B
R–W
V–G
Y
B–O
R–L
W–L
I11
I18
14 IB2
B 2
BRAKE FLUID LEVEL
WARNING SW
DIODE
4
2
1
B–W
(CANADA)
BR–W
(USA)
IG
EB
B–R

ABS AND TRACTION CONTROL

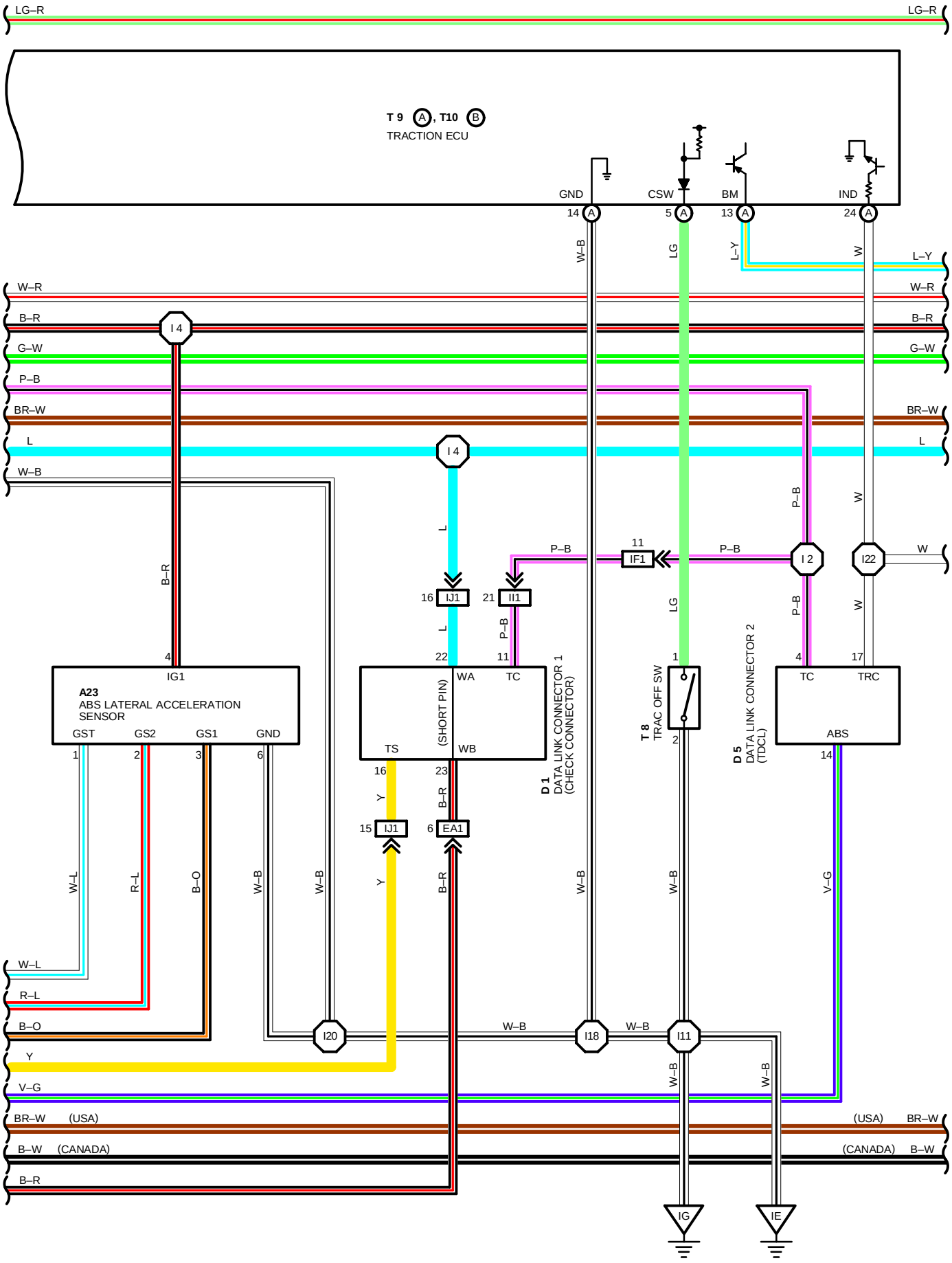

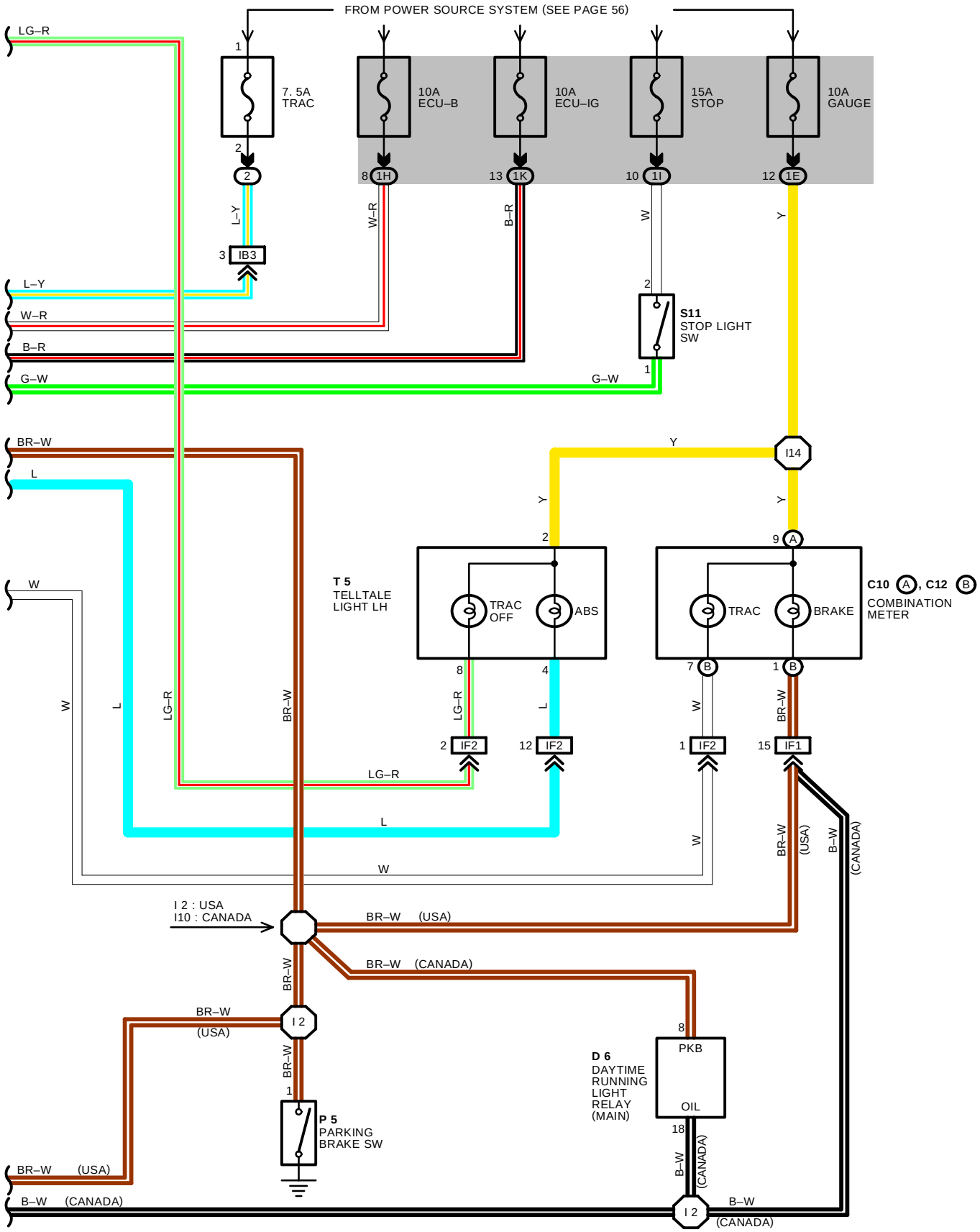
FROM POWER SOURCE SYSTEM (SEE PAGE 56)
7. 5A TRAC
10A ECU–B
10A ECU–IG
15A STOP
10A GAUGE
1H
1K
1I
1E
IB3
S11 STOP LIGHT SW
T 5 TELLTALE LIGHT LH
TRAC OFF
ABS
TRAC
BRAKE
C10 A, C12 B COMBINATION METER
I14
IF2
IF1
I 2 : USA
I10 : CANADA
I 2
P 5 PARKING BRAKE SW
D 6 DAYTIME RUNNING LIGHT RELAY (MAIN)
PKB
OIL
LG–R
L–Y
W–R
B–R
G–W
BR–W
L
W
Y
B–W
(USA)
(CANADA)

SYSTEM OUTLINE

(FOR ABS)

THIS SYSTEM CONTROLS THE RESPECTIVE BRAKE FLUID PRESSURES ACTING ON THE DISC BRAKE CYLINDERS OF THE RIGHT FRONT WHEEL, LEFT FRONT WHEEL, RIGHT REAR WHEEL AND LEFT REAR WHEEL WHEN THE BRAKES ARE APPLIED IN A PANIC STOP SO THAT THE WHEELS DO NOT LOCK.

THIS RESULTS IN IMPROVED DIRECTIONALLY STABILITY AND STEERABILITY DURING PANIC BRAKING.

1. INPUT SIGNALS

(1) SPEED SENSOR SIGNAL
THE SPEED OF THE WHEELS IS DETECTED AND INPUT TO **TERMINALS FL+, FR+, RL+** AND **RR+** OF THE ABS AND TRACTION ECU.

(2) STOP LIGHT SW SIGNAL
A SIGNAL IS INPUT TO **TERMINAL STP** OF THE ABS AND TRACTION ECU WHEN THE BRAKE PEDAL IS DEPRESSED.

(3) PARKING BRAKE SW SIGNAL
A SIGNAL IS INPUT TO **TERMINAL PKB** OF THE ABS AND TRACTION ECU WHEN THE PARKING BRAKE LEVER IS PULLED UP.

(4) DECELERATION SENSOR SIGNAL
LATERAL ACCELERATION IS DETECTED AND INPUT TO THE ABS AND TRACTION ECU.

2. SYSTEM OPERATION

DURING SUDDEN BRAKING, THE ABS AND TRACTION ECU WHICH HAS SIGNALS INPUT FROM EACH SENSOR CONTROLS THE CURRENT FLOWING TO THE SOLENOID INSIDE THE ACTUATOR AND LETS THE HYDRAULIC PRESSURE ACTING ON EACH WHEEL CYLINDER ESCAPE TO THE RESERVOIR. THE PUMP INSIDE THE ACTUATOR IS ALSO OPERATING AT THIS TIME AND IT RETURNS THE BRAKE FLUID FROM THE RESERVOIR TO THE MASTER CYLINDER, THUS PREVENTING LOCKING OF THE VEHICLE WHEELS.

IF THE ECU JUDGES THAT THE HYDRAULIC PRESSURE ACTING ON THE WHEEL CYLINDER IS INSUFFICIENT, THE CURRENT ACTING ON SOLENOID IS CONTROLLED AND THE HYDRAULIC PRESSURE IS INCREASED, HOLDING OF THE HYDRAULIC PRESSURE IS ALSO CONTROLLED BY THE ECU, BY THE SAME METHOD AS ABOVE. BY REPEATED PRESSURE REDUCTION, HOLDING AND INCREASE ARE REPEATED TO MAINTAIN VEHICLE STABILITY AND TO IMPROVE STEERABILITY DURING SUDDEN BRAKING.

(FOR TRACTION CONTROL)

THE TRACTION CONTROL SYSTEM IS A SYSTEM WHEREBY THE “ABS AND TRACTION ECU” AND “TRACTION ECU” CONTROLS THE ENGINE TORQUE AND THE HYDRAULIC PRESSURE OF THE WHEEL CYLINDER OF THE DRIVING WHEELS IN ORDER TO CONTROL SPINNING OF THE DRIVING WHEELS WHEN STARTING OFF AND ACCELERATING, AND PROVIDE THE MOST APPROPRIATE DRIVING FORCE IN RESPONSE TO THE ROAD CONDITIONS FOR VEHICLE STABILITY.

TRACTION CONTROL OPERATION

VEHICLE SPEED SIGNALS FROM THE SPEED SENSOR INSTALLED ON EACH WHEEL ARE INPUT TO THE ABS AND TRACTION ECU.

WHEN THE ACCELERATOR PEDAL IS DEPRESSED WHILE DRIVING ON A SLIPPERY ROAD AND THE DRIVING WHEEL (REAR WHEEL) SLIPS, IF THE ROTATION OF THE REAR WHEEL EXCEEDS THE ROTATION OF THE FRONT WHEELS FOR A SPECIFIED PERIOD, THE ECU JUDGES THAT THE REAR WHEEL IS SLIPPING.

WHEN THIS OCCURS, CURRENT FLOWS FROM TRACTION ECU TO SUB THROTTLE ACTUATOR TO CLOSE THE SUB THROTTLE VALVE. AT THE SAME TIME, OPERATION OF THE ABS AND TRACTION ECU CAUSE THE TRACTION BRAKE ACTUATORS (MASTER CYLINDER CUT, RESERVOIR CUT SOLENOID) TO TURN ON TO SWITCH THE HYDRAULIC CIRCUIT TO “TRACTION” MODE.

IN THIS CASE, SIGNALS ARE INPUT FROM **TERMINAL SRR** OF ABS AND TRACTION ECU TO **TERMINAL (B)3** OF ABS ACTUATOR, AND FROM **TERMINAL SRL** OF ABS AND TRACTION ECU TO **TERMINAL (B)6** OF ABS ACTUATOR, CONTROLLING THE REAR WHEEL SOLENOID IN THE ABS ACTUATOR AND INCREASING THE HYDRAULIC PRESSURE OF THE WHEEL CYLINDER IN ORDER TO PREVENT SLIP.

TO MAINTAIN THE HYDRAULIC PRESSURE OF THE REAR WHEELS, THE REAR WHEEL SOLENOID INSIDE THE ABS ACTUATOR IS PUT IN “HOLD” MODE AND KEEPS THE HYDRAULIC PRESSURE TO THE WHEEL CYLINDER CONSTANT.

WHEN THE AMOUNT OF SLIP HAS DECREASED, THE HYDRAULIC PRESSURE IN THE WHEEL CYLINDER DECREASES.

SERVICE HINTS

A20 (A), A21 (B), A22 (C) ABS AND TRACTION ECU
(A) 7–GROUND : ALWAYS **10–14** VOLTS
(A) 24–GROUND : **10–14** VOLTS WITH IGNITION SW AT **ON** POSITION
(C) 6–GROUND : **10–14** VOLTS WITH STOP LIGHT SW ON
(A) 25, **(C)** 4, **(C)** 9–GROUND : ALWAYS CONTINUOUS
(C) 12–GROUND : **10–14** VOLTS WITH PARKING BRAKE LEVER PULLED UP (PARKING BRAKE SW ON)

A 6 (A), A 7 (B) ABS ACTUATOR
(A) 1–GROUND : ALWAYS CONTINUOUS
(B) 1, **(B)** 3, **(B)** 4, **(B)** 6–GROUND : APPROX. **1.2** (IGNITION SW OFF)
(B) 2–GROUND : **4–6** (IGNITION SW OFF)

T 3 TRACTION BRAKE ACTUATOR
1–3 : APPROX. **2.1**
2–4 : APPROX. **2.1**

S11 STOP LIGHT SW
2–1: CLOSED WITH BRAKE PEDAL DEPRESSED

A10, A11, A31, A32 ABS SPEED SENSOR FRONT LH, RH, REAR LH, RH
1–2: **0.8– 1.3** K (**20**˚C, **68**˚F)

T 9(A), T10(B) TRACTION ECU
(A)26–GROUND: **10–14** VOLTS WITH IGNITION SW AT **ON** POSTION
(A)13–GROUND: ALWAYS **10–14** VOLTS
(A)14–GROUND: ALWAYS BELOW **1** VOLTS
(A)18–GROUND:**10–14** VOLTS WITH IGNITION SW ON PARKING BRAKE LEVER RELEASED (PARKING BRAKE SW OFF)
(A) 3–GROUND: **10–14** VOLTS WITH STOP LIGHT SW ON
(A) 5–GROUND: **10–14** VOLTS WITH TRAC OFF SW RELEASED
(A)12–GROUND: ALWAYS **10–14** VOLTS

P 5 PARKING BRAKE SW
1–GROUND : CLOSED WITH PARKING BRAKE LEVER DEPRESSED

S 4 SUB THROTTLE ACTUATOR
2–1, 2–3 : APPROX. **1.1**
5–4, 5–6 : APPROX. **1.1**

○ : PARTS LOCATION

CODE		SEE PAGE	CODE		SEE PAGE	CODE		SEE PAGE
A 6	A	24 (2JZ–GTE)	**B 2**		24 (2JZ–GTE)	**S 5**		25
A 7	B	24 (2JZ–GTE)	**C10**	A	28	**S11**		29
A10		24 (2JZ–GTE)	**C12**	B	28	**T 3**		25
A11		24 (2JZ–GTE)	**D 1**		24 (2JZ–GTE)	**T 4**		25
A20	A	28	**D 5**		28	**T 5**		29
A21	B	28	**D 6**		28	**T 8**		29
A22	C	28	**E 9**	B	29	**T 9**	A	29
A23		28	**E10**	A	29	**T10**	B	29
A31		30	**P 5**		29			
A32		30	**S 4**		25			

: RELAY BLOCKS

CODE	SEE PAGE	RELAY BLOCKS (RELAY BLOCK LOCATION)
2	22	R/B NO. 2 (ENGINE COMPARTMENT LEFT)
4	23	R/B NO. 4 (LEFT KICK PANEL)
5	23	R/B NO. 5 (ENGINE COMPARTMENT RIGHT)

: JUNCTION BLOCK AND WIRE HARNESS CONNECTOR

CODE	SEE PAGE	JUNCTION BLOCK AND WIRE HARNESS (CONNECTOR LOCATION)
1E	20	INSTRUMENT PANEL WIRE AND J/B NO.1 (LEFT KICK PANEL)
1H	20	COWL WIRE AND J/B NO.1 (LEFT KICK PANEL)
1I		
1K		

: CONNECTOR JOINING WIRE HARNESS AND WIRE HARNESS

CODE	SEE PAGE	JOINING WIRE HARNESS AND WIRE HARNESS (CONNECTOR LOCATION)
EA1	32 (2JZ–GTE)	ENGINE WIRE AND ENGINE ROOM MAIN WIRE (NEAR THE R/B NO. 2)
IB2	36	ENGINE ROOM MAIN WIRE AND COWL WIRE (LEFT KICK PANEL)
IB3		
IB5	36	ENGINE ROOM MAIN WIRE AND COWL WIRE (RIGHT KICK PANEL)
IB6		
IC2	36	FLOOR NO. 2 WIRE AND COWL WIRE (LEFT KICK PANEL)
IF1	36	INSTRUMENT PANEL WIRE AND COWL WIRE (INSTRUMENT PANEL REINFORCEMENT LH)
IF2		
II1	38	ENGINE WIRE AND INSTRUMENT PANEL WIRE (RIGHT KICK PANEL)
IJ1	38	ENGINE WIRE AND COWL WIRE (RIGHT KICK PANEL)
IJ2		

: GROUND POINTS

CODE	SEE PAGE	GROUND POINTS LOCATION
EA	32 (2JZ–GTE)	FRONT SIDE OF RIGHT FENDER
EB	32 (2JZ–GTE)	FRONT SIDE OF LEFT FENDER
IE	36	LEFT KICK PANEL
IG	36	RIGHT KICK PANEL

: SPLICE POINTS

CODE	SEE PAGE	WIRE HARNESS WITH SPLICE POINTS	CODE	SEE PAGE	WIRE HARNESS WITH SPLICE POINTS
E 2	32	ENGINE ROOM MAIN WIRE	**I 9**	38	COWL WIRE
E 5			**I10**		
E 6			**I11**		
E 8			**I14**	38	INSTRUMENT PANEL WIRE
E16	32	ENGINE WIRE	**I18**	38	COWL WIRE
1 2	38	COWL WIRE	**I20**		
1 4			**I22**		

A 6 (A) BLACK



A 7 (B) GRAY



A10 GRAY



A11 GRAY



A20 (A)

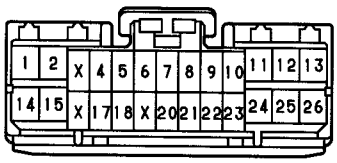

A21 (B)

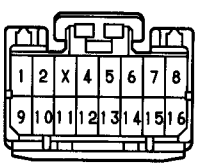

A22 (C)

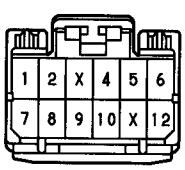

A23

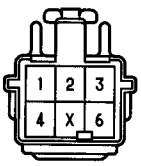

A31 GRAY



A32 GRAY



B 2 GRAY



C10 (A) BLUE

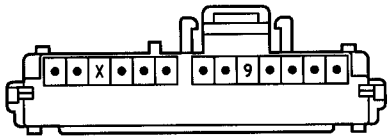

C12 (B)

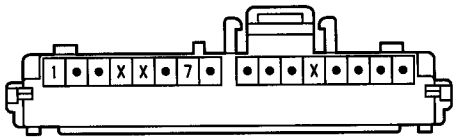

D 1 BLACK

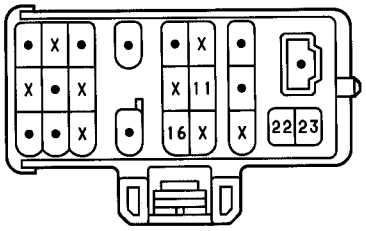

D 5 DARK GRAY

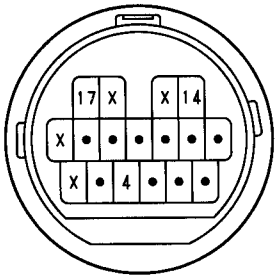

D 6 GRAY

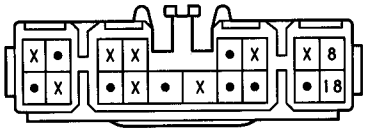

E 9 (B) DARK GRAY

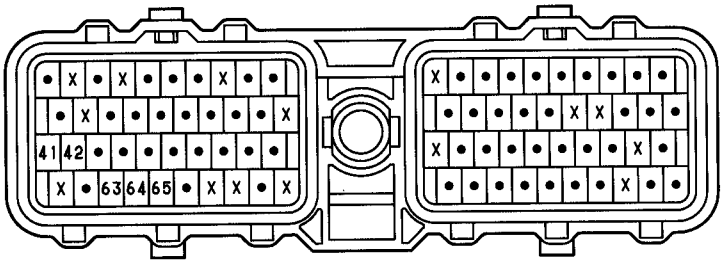

E10 (A) DARK GRAY

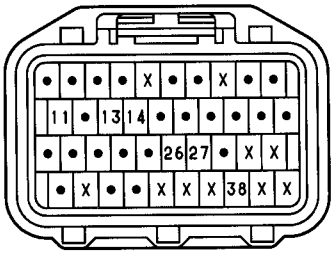

P 5



S 4 BLACK



S 5 BLACK



S11 BLUE

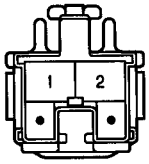

T 3 GRAY



T 4 GRAY

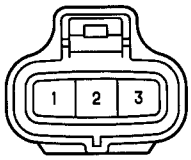

T 5

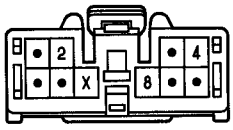

T 8 BLACK

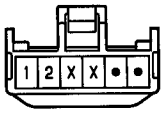

T 9 (A)

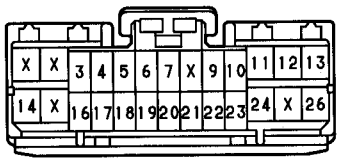

T10 (B)

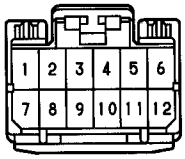

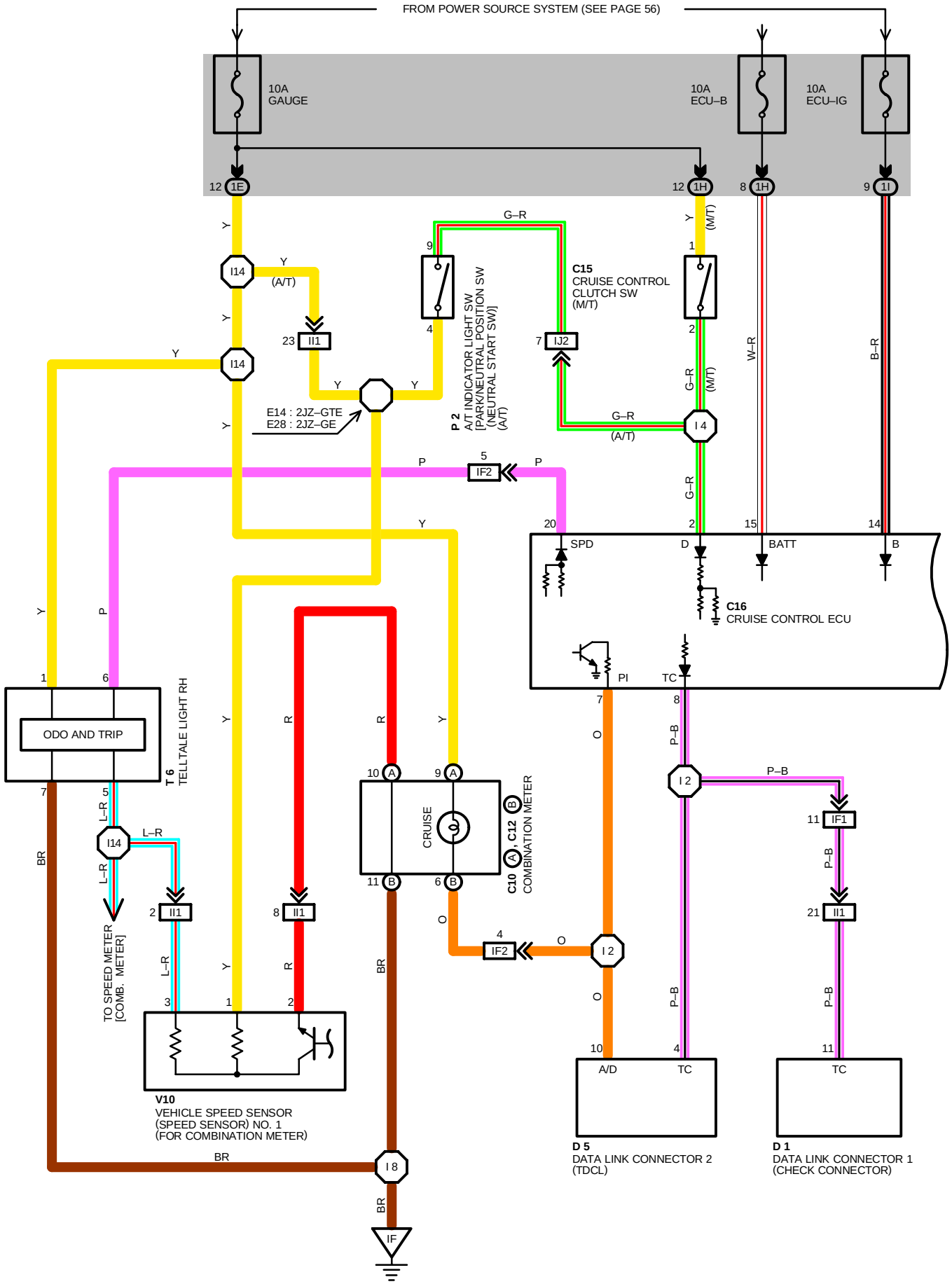
FROM POWER SOURCE SYSTEM (SEE PAGE 56)
10A GAUGE
10A ECU–B
10A ECU–IG
12 1E
12 1H
8 1H
9 1I
I14
(A/T)
23 II1
E14 : 2JZ–GTE
E28 : 2JZ–GE
P 2
A/T INDICATOR LIGHT SW [PARK/NEUTRAL POSITION SW (NEUTRAL START SW)] (A/T)
C15
CRUISE CONTROL CLUTCH SW (M/T)
IJ2
I 4
(M/T)
G–R
W–R
B–R
IF2
SPD
D
BATT
B
C16
CRUISE CONTROL ECU
PI
TC
ODO AND TRIP
T 6
TELLTALE LIGHT RH
L–R
BR
TO SPEED METER [COMB. METER]
II1
V10
VEHICLE SPEED SENSOR (SPEED SENSOR) NO. 1 (FOR COMBINATION METER)
CRUISE
C10 (A), C12 (B)
COMBINATION METER
I 2
P–B
IF1
21 II1
A/D
D 5
DATA LINK CONNECTOR 2 (TDCL)
D 1
DATA LINK CONNECTOR 1 (CHECK CONNECTOR)
I 8
IF

FROM POWER SOURCE SYSTEM (SEE PAGE 56)

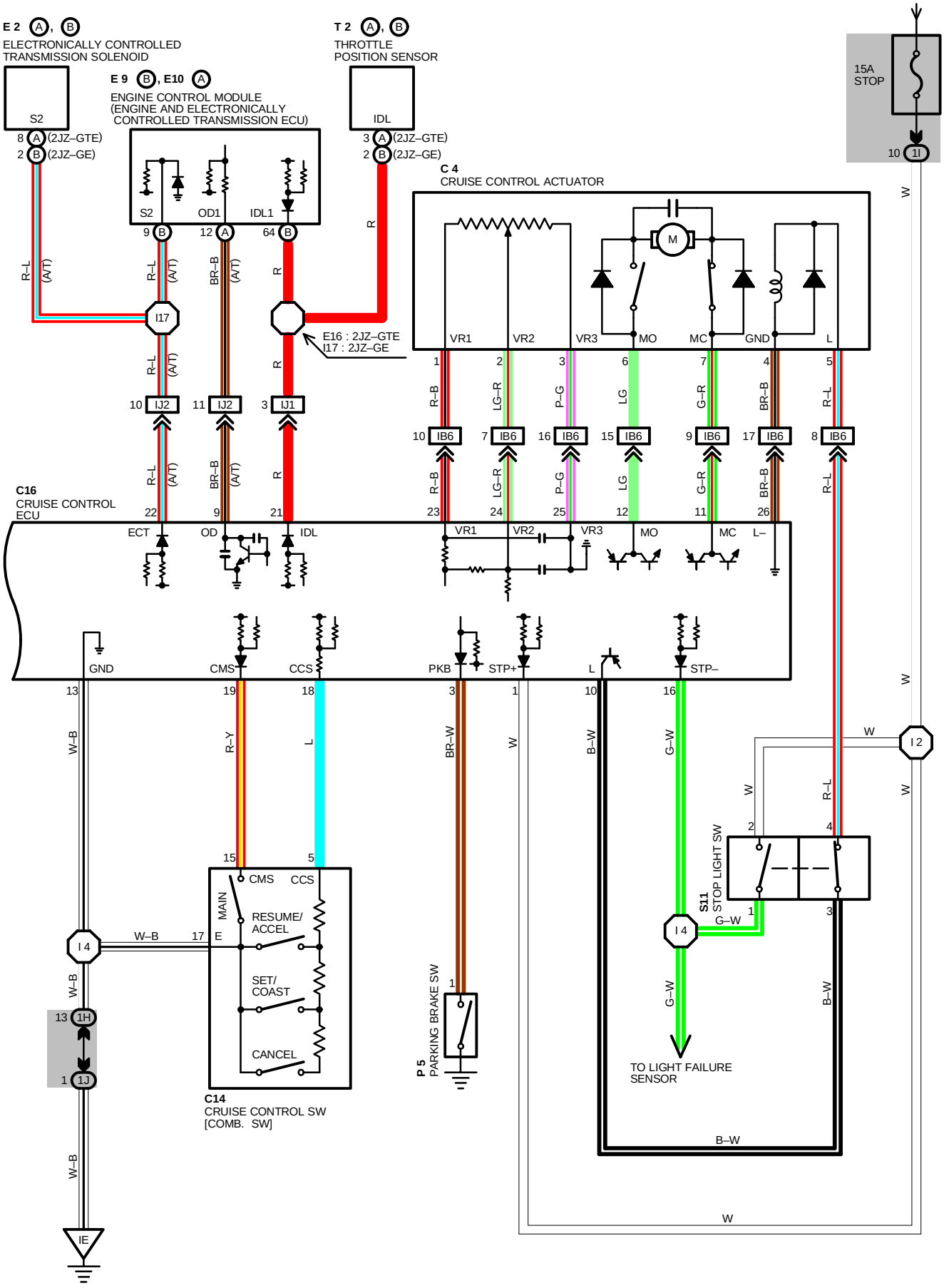

SYSTEM OUTLINE

CURRENT IS APPLIED AT ALL TIMES THROUGH **STOP** FUSE TO **TERMINAL 1** OF THE CRUISE CONTROL ECU, **TERMINAL 2** OF STOP LIGHT SW, AND ALSO THROUGH THE **ECU–B** FUSE TO **TERMINAL 15** OF CRUISE CONTROL ECU.

WITH THE IGNITION SW TURNED TO ON, THE CURRENT FLOWS THROUGH **GAUGE** FUSE TO **TERMINAL (A)9** OF COMBINATION METER AND THE CURRENT THROUGH **ECU–IG** FUSE FLOWS TO **TERMINAL 14** OF CRUISE CONTROL ECU.

WHEN THE IGNITION SW IS ON AND THE CRUISE CONTROL MAIN SWITCH IS TURNED ON, A SIGNAL IS INPUT FROM **TERMINAL 15** OF CRUISE CONTROL MAIN SW TO **TERMINAL 19** OF CRUISE CONTROL ECU. AS A RESULT, THE CRUISE CONTROL ECU FUNCTIONS AND THE CURRENT FLOWS THROUGH **TERMINAL 14** OF CRUISE CONTROL ECU TO **TERMINAL 13** OF CRUISE CONTROL ECU → **GROUND**, AND THE CRUISE CONTROL SYSTEM IS IN A CONDITION READY FOR OPERATION.

AT THE SAME TIME, THE CURRENT THROUGH THE **GAUGE** FUSE FLOWS TO **TERMINAL (A)9** OF CRUISE CONTROL INDICATOR LIGHT → **TERMINAL (B)6** → **TERMINAL 7** OF CRUISE CONTROL ECU → **TERMINAL 13** → **GROUND**. CAUSING THE CRUISE CONTROL INDICATOR LIGHT TO LIGHT UP, INDICATING THAT THE CRUISE CONTROL IS READY FOR OPERATION.

1. SET OPERATION

WHEN THE CRUISE CONTROL MAIN SW IS TURNED ON AND THE SET SW IS PUSHED WITH THE VEHICLE SPEED WITHIN THE SET LIMIT (APPROX. **40** KM/H, **25** MPH TO **200** KM/H, **124** MPH), A SIGNAL IS INPUT TO **TERMINAL 18** OF THE CRUISE CONTROL ECU AND THE VEHICLE SPEED AT THE TIME THE SET SW IS RELEASED, WHICH IS MEMORIZED IN THE ECU AS THE SET SPEED.

2. SET SPEED CONTROL

DURING CRUISE CONTROL DRIVING, THE ECU COMPARES THE SET SPEED MEMORIZED IN THE ECU WITH THE ACTUAL VEHICLE SPEED INPUTS INTO **TERMINAL 20** OF THE CRUISE CONTROL ECU FROM THE SPEED SENSOR, AND CONTROLS THE CRUISE CONTROL ACTUATOR TO MAINTAIN THE SET SPEED.

WHEN THE ACTUAL SPEED IS LOWER THAN THE SET SPEED, THE ECU CAUSES THE CURRENT TO THE CRUISE CONTROL ACTUATOR TO FLOW FROM **TERMINAL 12** → **TERMINAL 6** OF CRUISE CONTROL ACTUATOR → **TERMINAL 7** → **TERMINAL 11** OF CRUISE CONTROL ECU. AS A RESULT, THE MOTOR IN THE CRUISE CONTROL ACTUATOR IS ROTATED TO OPEN THE THROTTLE VALVE AND THE THROTTLE CABLE IS PULLED TO INCREASE THE VEHICLE SPEED. WHEN THE ACTUAL DRIVING SPEED IS HIGHER THAN THE SET SPEED, THE CURRENT TO CRUISE CONTROL ACTUATOR FLOWS FROM **TERMINAL 11** OF ECU → **TERMINAL 7** OF CRUISE CONTROL ACTUATOR → **TERMINAL 6** → **TERMINAL 12** OF CRUISE CONTROL ECU.

THIS CAUSES THE MOTOR IN THE CRUISE CONTROL ACTUATOR TO ROTATE TO CLOSE THE THROTTLE VALVE AND RETURN THE THROTTLE CABLE TO DECREASE THE VEHICLE SPEED.

3. COAST CONTROL

DURING THE CRUISE CONTROL DRIVING, WHILE THE COAST SW IS ON, THE CRUISE CONTROL ACTUATOR RETURNS THE THROTTLE CABLE TO CLOSE THE THROTTLE VALVE AND DECREASE THE DRIVING SPEED. THE VEHICLE SPEED WHEN THE COAST SWITCH IS TURNED OFF IS MEMORIZED AND THE VEHICLE CONTINUES AT THE NEW SET SPEED.

4. ACCEL CONTROL

DURING CRUISE CONTROL DRIVING, WHILE THE ACCEL SW IS TURNED ON, THE CRUISE CONTROL ACTUATOR PULLS THE THROTTLE CABLE TO OPEN THE THROTTLE VALVE AND INCREASE THE DRIVING SPEED.

THE VEHICLE SPEED WHEN THE ACCEL SW IS TURNED OFF IS MEMORIZED AND THE VEHICLE CONTINUES AT THE NEW SET SPEED.

5. RESUME CONTROL

UNLESS THE VEHICLE SPEED FALLS BELOW THE MINIMUM SPEED LIMIT (APPROX. **40** KM/H, **25** MPH) AFTER CANCELING THE SET SPEED BY THE CANCEL SW, PUSHING THE RESUME SW WILL CAUSE THE VEHICLE TO RESUME THE SPEED SET BEFORE THE CANCELLATION.

6. MANUAL CANCEL MECHANISM

IF ANY OF THE FOLLOWING OPERATIONS OCCUR DURING CRUISE CONTROL OPERATION, THE MAGNETIC CLUTCH OF THE ACTUATOR TURNS OFF AND THE MOTOR ROTATES TO CLOSE THE THROTTLE VALVE AND THE CRUISE CONTROL IS RELEASED.

- PLACING THE SHIFT LEVER IN EXCEPT “D” POSITION (PARK/NEUTRAL POSITION SW (NEUTRAL START SW EXCEPT “D” POSITION)). “SIGNAL IS NOT INPUT TO **TERMINAL 2** OF ECU” (A/T).
- DEPRESSING THE BRAKE PEDAL (STOP LIGHT SW ON). “SIGNAL IS INPUT TO **TERMINAL 16** OF ECU”
- PULLING THE PARKING BRAKE LEVER (PARKING BRAKE SW ON). “SIGNAL INPUT TO **TERMINAL 3** OF ECU”
- PUSHING THE CANCEL SWITCH (CANCEL SW ON). “SIGNAL IS INPUT TO **TERMINAL 18** OF ECU”
- DEPRESSING THE CLUTCH PEDAL (CRUISE CONTROL CLUTCH SW OFF). “SIGNAL IS NOT INPUT TO **TERMINAL 2** OF ECU”

7. AUTO CANCEL FUNCTION

A) IF ANY OF THE FOLLOWING OPERATING CONDITIONS OCCUR DURING CRUISE CONTROL OPERATION, THE SET SPEED IS ERASED, CURRENT FLOW TO MAGNETIC CLUTCH IS STOPPED AND THE CRUISE CONTROL IS RELEASED. (MAIN SW TURNS OFF).

WHEN THIS OCCURS, THE IGNITION SW MUST BE TURNED OFF ONCE BEFORE THE MAIN SW WILL TURN ON.

- OVER CURRENT TO TRANSISTOR DRIVING MOTOR AND/OR MAGNETIC CLUTCH.
- WHEN CURRENT CONTINUED TO FLOW TO THE MOTOR INSIDE THE ACTUATOR IN THE THROTTLE VALVE “OPEN” DIRECTION.
- OPEN CIRCUIT IN MAGNETIC CLUTCH.
- MOMENTARY INTERRUPTION OF VEHICLE SPEED SIGNAL.
- SHORT CIRCUIT IN CRUISE CONTROL SW.
- MOTOR DOES NOT OPERATE DESPITE THE MOTOR DRIVE SIGNAL BEING OUTPUT.

B) IF ANY OF THE FOLLOWING CONDITIONS OCCUR DURING CRUISE CONTROL OPERATION, THE SET SPEED IS ERASED AND THE CRUISE CONTROL IS RELEASED. (THE POWER OF MAGNETIC CLUTCH IS CUT OFF UNTIL THE SET SW IS “ON” AGAIN.)

- WHEN THE VEHICLE SPEED FALLS BELOW THE MINIMUM SPEED LIMIT, APPROX. **40** KM/H (**25** MPH)
- WHEN THE VEHICLE SPEED FALLS MORE THAN **16** KM/H (**10** MPH) BELOW THE SET SPEED, E.G. ON AN UPWARD SLOPE.
- WHEN POWER TO THE CRUISE CONTROL SYSTEM IS MOMENTARILY CUT OFF.

C) IF ANY OF THE FOLLOWING CONDITIONS OCCUR DURING CRUISE CONTROL OPERATION, THE CRUISE CONTROL IS RELEASED.

- OPEN CIRCUIT FOR **TERMINAL 1** OF CRUISE CONTROL ECU AND **TERMINAL 2** OF STOP LIGHT SW.

8. AUTOMATIC TRANSMISSION CONTROL FUNCTION

- IN OVERDRIVE. IF THE VEHICLE SPEED BECOMES LOWER THAN THE OVERDRIVE CUT SPEED (SET SPEED MINUS APPROX. **4** KM/H, **2.5** MPH) DURING CRUISE CONTROL OPERATION, SUCH AS DRIVING UP A HILL, THE OVERDRIVE IS RELEASED AND THE POWER INCREASED TO PREVENT A REDUCTION IN VEHICLE SPEED.
- AFTER RELEASING THE OVERDRIVE, VEHICLE SPEED BECOMES HIGHER THAN THE OVERDRIVE RETURN SPEED (SET SPEED MINUS APPROX. **2** KM/H, **1.2** MPH) AND THE ECU JUDGES BY THE SIGNALS FROM POTENTIONMETER OF THE ACTUATOR THAT THE UPWARD SLOPE HAS FINISHED, OVERDRIVE IS RESUMED AFTER APPROXIMATELY **2** SECONDS.
- DURING CRUISE CONTROL DRIVING, THE CRUISE CONTROL OPERATION SIGNAL IS OUTPUT FROM THE CRUISE CONTROL ECU TO THE ENGINE CONTROL MODULE (ENGINE AND ELECTRONICALLY CONTROLLED TRANSMISSION ECU). UPON RECEIVING THIS SIGNAL, THE ENGINE CONTROL MODULE (ENGINE AND ELECTRONICALLY CONTROLLED TRANSMISSION ECU) CHANGES THE SHIFT PATTERN TO NORMAL.

TO MAINTAIN SMOOTH CRUISE CONTROL OPERATION (ON A DOWNWARD SLOPE ETC.), LOCK–UP RELEASE OF THE TRANSMISSION WHEN THE IDLING POINT OF THE THROTTLE POSITION IS “ON” IS FORBIDDEN.

SERVICE HINTS

C 4 CRUISE CONTROL ACTUATOR

1–3 : APPROX. **2** K
5–4 : APPROX. **38.5**

C14 CRUISE CONTROL SW [COMB.SW]

15–17 : CONTINUOUS WITH MAIN SW ON
5–17 : APPROX. **418** WITH CANCEL SW ON
: APPROX. **68** WITH RESUME/ACCEL SW ON
: APPROX. **198** WITH SET/COAST SW ON

C16 CRUISE CONTROL ECU

14–GROUND : APPROX. **12** VOLTS WITH IGNITION SW AT **ON** POSITION
1, 15–GROUND : ALWAYS APPROX. **12** VOLTS
3–GROUND : CONTINUOUS WITH PARKING BRAKE LEVER PULLED UP (ONE OF THE CANCEL SW)
20–GROUND : **4** PULSE WITH **1** ROTATION OF ROTOR SHAFT
18–GROUND : APPROX. **418** WITH CANCEL SW ON IN CONTROL SW
: APPROX. **198** WITH SET/COAST SW ON IN CONTROL SW
: APPROX. **68** WITH RESUME/ACCEL SW ON IN CONTROL SW
13–GROUND : ALWAYS CONTINUOUS

CRUISE CONTROL

: PARTS LOCATION

CODE		SEE PAGE	CODE		SEE PAGE	CODE		SEE PAGE
C 4		24 (2JZ–GTE)	D 1		26 (2JZ–GE)	P 5		29
		26 (2JZ–GE)	D 5		28	S11		29
C10	A	28	E 2	A	24 (2JZ–GTE)	T 2	A	25 (2JZ–GTE)
C12	B	28		B	26 (2JZ–GE)		B	27 (2JZ–GE)
C14		28	E 9	B	29	T 2		29
C15		28	E10	A	29	V10		25 (2JZ–GTE)
C16		28	P 2		25 (2JZ–GTE)			27 (2JZ–GE)
D 1		24 (2JZ–GTE)			27 (2JZ–GE)			

: JUNCTION BLOCK AND WIRE HARNESS CONNECTOR

CODE	SEE PAGE	JUNCTION BLOCK AND WIRE HARNESS (CONNECTOR LOCATION)
1E	20	INSTRUMENT PANEL WIRE AND J/B NO.1 (LEFT KICK PANEL)
1H	20	COWL WIRE AND J/B NO.1 (LEFT KICK PANEL)
1I		
1J		

: CONNECTOR JOINING WIRE HARNESS AND WIRE HARNESS

CODE	SEE PAGE	JOINING WIRE HARNESS AND WIRE HARNESS (CONNECTOR LOCATION)
IB6	36	ENGINE ROOM MAIN WIRE AND COWL WIRE (RIGHT KICK PANEL)
IF1	36	INSTRUMENT PANEL WIRE AND COWL WIRE (INSTRUMENT PANEL REINFORCEMENT LH)
IF2		
II1	38	ENGINE WIRE AND INSTRUMENT PANEL WIRE (RIGHT KICK PANEL)
IJ1	38	ENGINE WIRE AND COWL WIRE (RIGHT KICK PANEL)
IJ2		

: GROUND POINTS

CODE	SEE PAGE	GROUND POINTS LOCATION
IE	36	LEFT KICK PANEL
IF		

: SPLICE POINTS

CODE	SEE PAGE	WIRE HARNESS WITH SPLICE POINTS	CODE	SEE PAGE	WIRE HARNESS WITH SPLICE POINTS
E14	32	ENGINE WIRE	I 4	38	COWL WIRE
E16			I 8	38	INSTRUMENT PANEL WIRE
E28	34		I14		
I 2	38	COWL WIRE	I17	38	ENGINE WIRE

C 4 GRAY

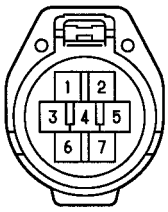

C10 (A) BLUE

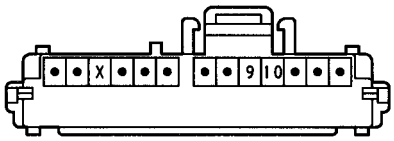

(2JZ-GTE) C12 (B)

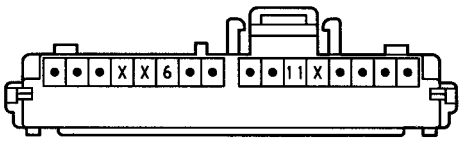

(2JZ-GE) C12 (B)

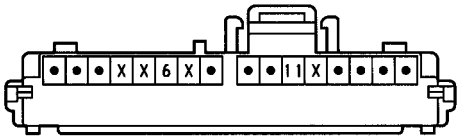

C14 BLACK

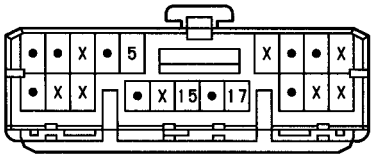

C15



(A/T) C16 GREEN

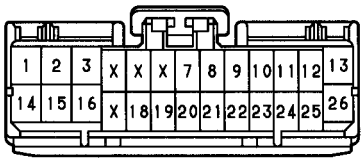

(M/T) C16 GREEN

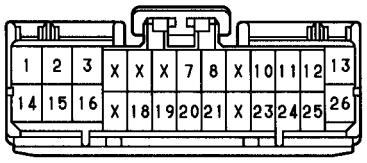

(2JZ-GTE) D 1 BLACK

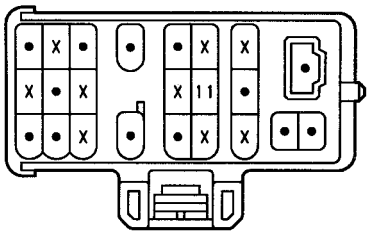

(2JZ-GE) D 1 BLACK

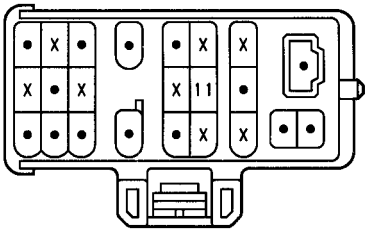

(2JZ-GTE) D 5 DARK GRAY

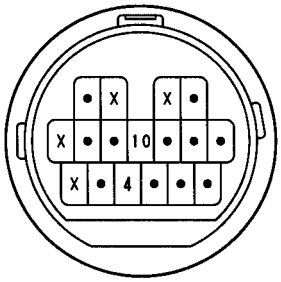

(2JZ-GE A/T) D 5 DARK GRAY

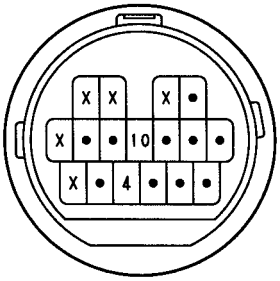

(2JZ-GE M/T) D 5 DARK GRAY

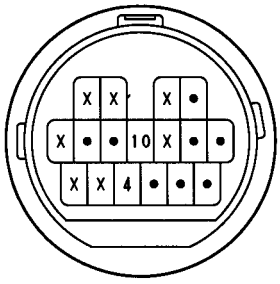

(2JZ-GTE) E 2 (A) GRAY

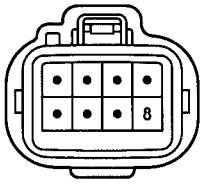

(2JZ-GE) E 2 (B) BLACK

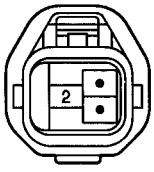

(2JZ-GTE) E 9 (B) DARK GRAY

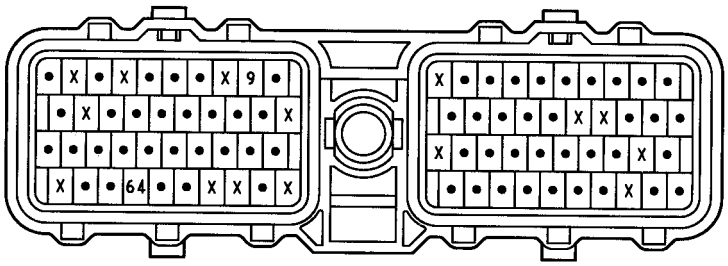

(2JZ-GE) E 9 (B) DARK GRAY

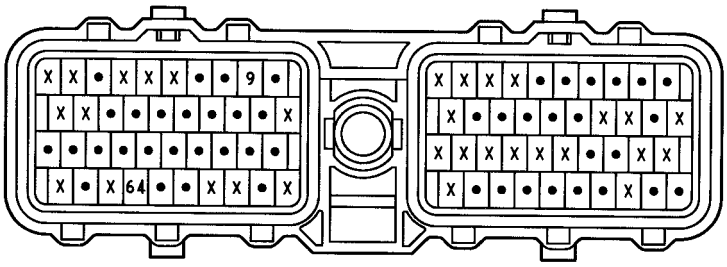

(2JZ-GTE) E10 (A) DARK GRAY

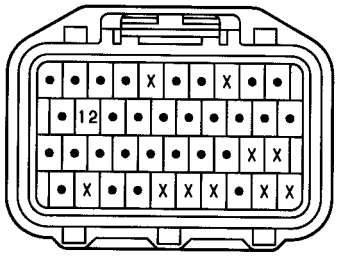

(2JZ-GE) E10 (A) DARK GRAY

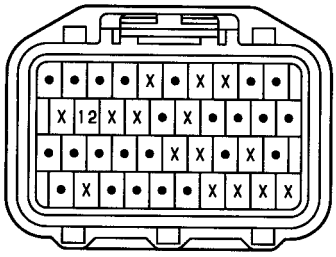

P 2 GRAY

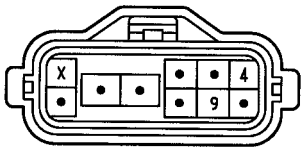

P 5



S11 BLUE

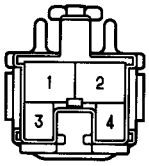

T 2 (A) BLACK

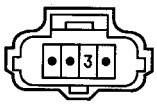

T 2 (B) BLACK

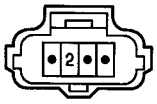

T 6

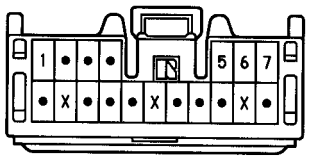

V10 BLACK



C10 (A) BLUE

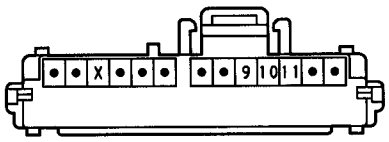

(2JZ-GTE) C12 (B)

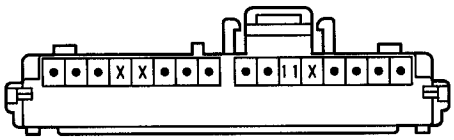

(2JZ-GE) C12 (B)

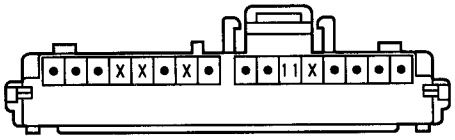

P 1 GRAY



P 4 BLUE



T 6

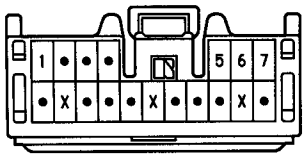

V10 BLACK



PPS (PROGRESSIVE POWER STEERING)

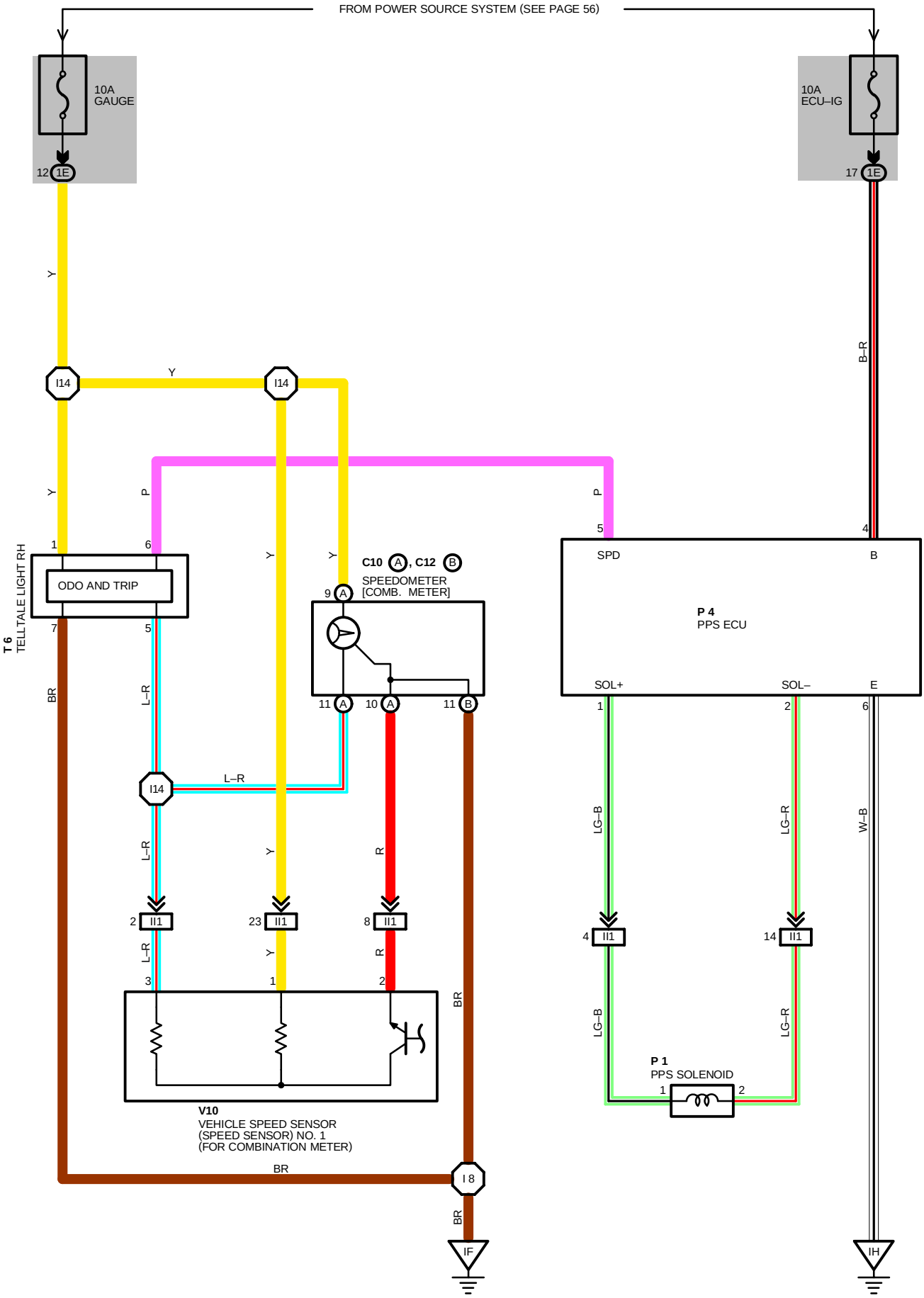

SYSTEM OUTLINE

THE PPS (HYDRAULIC REACTION TYPE) CONTROLS THE HYDRAULIC PRESSURE APPLIED TO THE HYDRAULIC REACTION CHAMBER IN THE GEAR BOX CONTROL UNIT USING THE PPS ECU, TO CHANGE THE STEERING FORCE AND PROVIDE OPTIMUM STEERING FEELING AT ANY VEHICLE SPEEDS AND UNDER ANY STEERING CONDITIONS.

(PPS OPERATION)

WHEN THE IGNITION SW IS TURNED ON THE STARTING CURRENT FLOWS FROM THE **ECU–IG** FUSE TO **TERMINAL 4** OF THE PPS ECU. THE PPS ECU MONITORS VEHICLE SPEED, INPUT SIGNAL TO **TERMINAL 5** OF THE ECU. WHEN THE VEHICLE SPEED IS LOW, THE PPS ECU SENDS A HIGHER–CURRENT FROM **TERMINAL 1** OF THE ECU → **TERMINAL 1** OF THE SOLENOID VALVE → **TERMINAL 2** → **TERMINAL 2** OF THE ECU → **TERMINAL 6** → **GROUND,** INCREASING THE SOLENOID VALVE OPENING ANGLE TO PROVIDE COMFORTABLE STEERING OPERATION. WHEN THE VEHICLE SPEED IS HIGH, THE PPS ECU DECREASES THE SOLENOID VALVE OPENING ANGLE BY REDUCING THE CURRENT TO THE VALVE TO PROVIDE RESPONSIVE STEERING FEELING.

SERVICE HINTS

P 1 PPS SOLENOID
1–2 : APPROX. **7.7** (**25**˚C, **77**˚F)
P 4 PPS ECU
4–GROUND : APPROX. **12** VOLTS WITH THE IGNITION SW AT **ON** POSITION
6–GROUND : ALWAYS CONTINUOUS

: PARTS LOCATION

CODE		SEE PAGE	CODE	SEE PAGE	CODE	SEE PAGE
C10	A	28	**P 1**	27 (2JZ–GE)	**V10**	25 (2JZ–GTE)
C12	B	28	**P 4**	29		27 (2JZ–GE)
P 1		25 (2JZ–GTE)	**T 6**	29		

: JUNCTION BLOCK AND WIRE HARNESS CONNECTOR

CODE	SEE PAGE	JUNCTION BLOCK AND WIRE HARNESS (CONNECTOR LOCATION)
1E	20	INSTRUMENT PANEL WIRE AND J/B NO. 1 (LEFT KICK PANEL)

: CONNECTOR JOINING WIRE HARNESS AND WIRE HARNESS

CODE	SEE PAGE	JOINING WIRE HARNESS AND WIRE HARNESS (CONNECTOR LOCATION)
II1	38	ENGINE WIRE AND INSTRUMENT PANEL WIRE (RIGHT KICK PANEL)

: GROUND POINTS

CODE	SEE PAGE	GROUND POINTS LOCATION
IF	36	LEFT KICK PANEL
IH	36	RIGHT KICK PANEL

: SPLICE POINTS

CODE	SEE PAGE	WIRE HARNESS WITH SPLICE POINTS	CODE	SEE PAGE	WIRE HARNESS WITH SPLICE POINTS
I 8	38	INSTRUMENT PANEL WIRE	**I 8**	38	INSTRUMENT PANEL WIRE

SHIFT LOCK

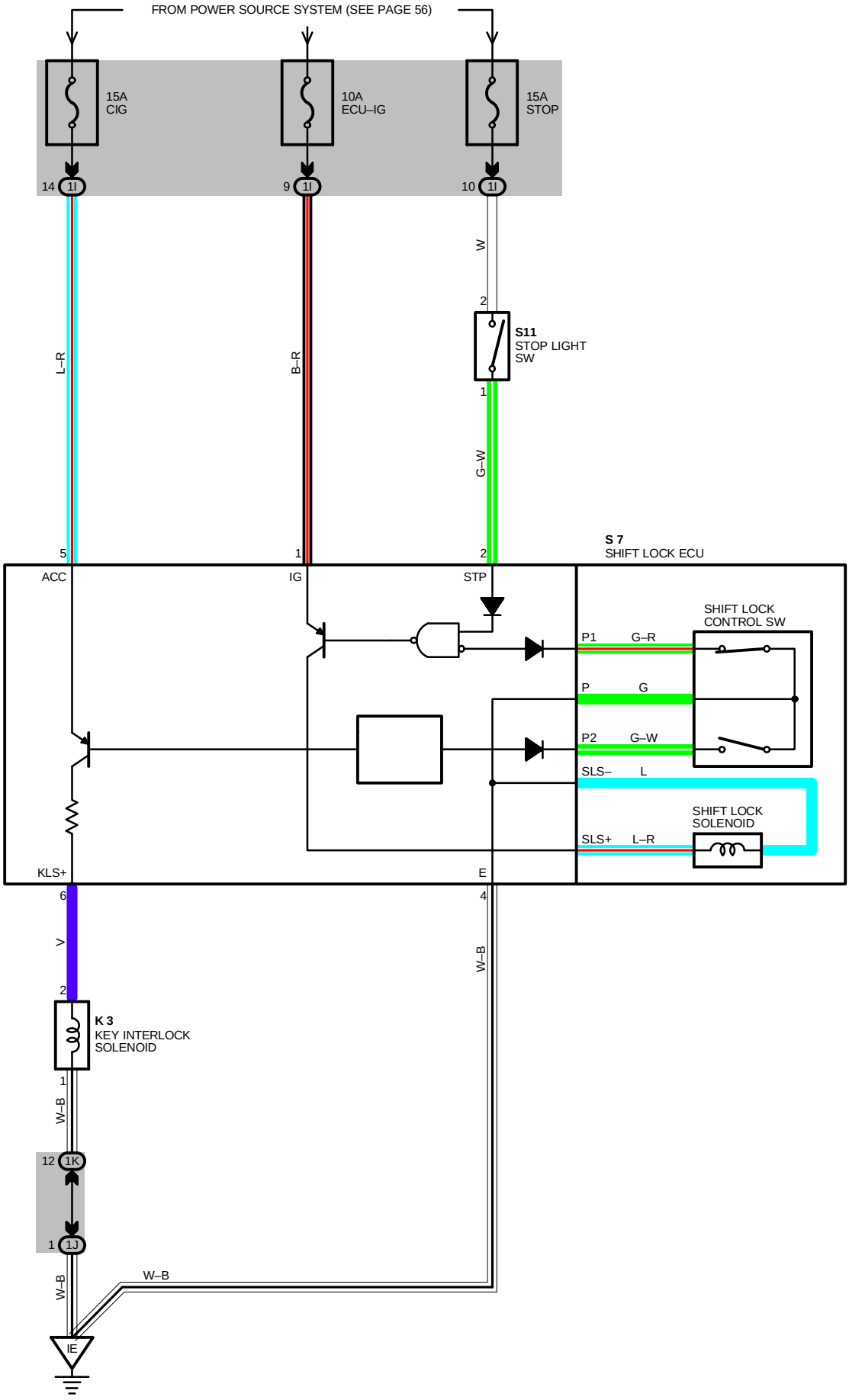
FROM POWER SOURCE SYSTEM (SEE PAGE 56)
15A
CIG
10A
ECU–IG
15A
STOP
14 1I
9 1I
10 1I
W
2
S11
STOP LIGHT
SW
1
L–R
B–R
G–W
5
1
2
S 7
SHIFT LOCK ECU
ACC
IG
STP
SHIFT LOCK
CONTROL SW
P1 G–R
P G
P2 G–W
SLS– L
SHIFT LOCK
SOLENOID
SLS+ L–R
KLS+
E
6
4
V
W–B
2
K 3
KEY INTERLOCK
SOLENOID
1
W–B
12 1K
1 1J
W–B
W–B
IE

SYSTEM OUTLINE

WHEN THE IGNITION SW IS TURNED TO **ACC** POSITION THE CURRENT FROM THE **CIG** FUSE FLOWS TO **TERMINAL 5** OF THE SHIFT LOCK ECU, IN THE **ON** POSITION, THE CURRENT FROM THE **ECU–IG** FUSE FLOWS TO **TERMINAL 1** OF THE ECU.

1. SHIFT LOCK MECHANISM

WITH THE IGNITION SW ON, WHEN A SIGNAL THAT THE BRAKE PEDAL IS DEPRESSED (STOP LIGHT SW ON) AND A SIGNAL THAT THE SHIFT LEVER IS PUT IN "**P**" POSITION (CONTINUITY BETWEEN P1 AND P OF THE SHIFT LOCK CONTROL SW) IS INPUT TO THE ECU, THE ECU OPERATES AND CURRENT FLOWS FROM **TERMINAL 1** OF THE ECU → **TERMINAL 'SLS+'** OF THE SHIFT LOCK SOLENOID → SOLENOID → **TERMINAL 'SLS–'** → **TERMINAL 4** OF THE ECU → **GROUND.** THIS CAUSES THE SHIFT LOCK SOLENOID TO TURN ON (PLATE STOPPER DISENGAGES) AND THE SHIFT LEVER CAN SHIFT INTO POSITION OTHER THAN THE "**P**".

2. KEY INTERLOCK MECHANISM

WITH THE IGNITION SW **ON** OR **ACC** POSITION, WHEN THE SHIFT LEVER IS PUT IN "**P**" POSITION (NO CONTINUITY BETWEEN P2 AND P OF SHIFT LOCK CONTROL SW), THE CURRENT FLOWING FROM **TERMINAL 6** OF THE ECU → KEY INTERLOCK SOLENOID IS CUT OFF. THIS CAUSES THE KEY INTERLOCK SOLENOID TO TURN OFF (LOCK LEVER DISENGAGES FROM **LOCK** POSITION) AND THE IGNITION KEY CAN BE TURNED FROM **ACC** TO **LOCK** POSITION.

SERVICE HINTS

S 7 SHIFT LOCK ECU

5–GROUND : APPROX. **12** VOLTS WITH THE IGNITION SW AT **ACC** OR **ON** POSITION
1–GROUND : APPROX. **12** VOLTS WITH THE IGNITION SW AT **ON** POSITION
4–GROUND : ALWAYS CONTINUOUS
2–GROUND : APPROX. **12** VOLTS WITH THE BRAKE PEDAL DEPRESSED

S11 STOP LIGHT SW

2–1 : CLOSED WITH THE BRAKE PEDAL DEPRESSED

○ : PARTS LOCATION

CODE	SEE PAGE	CODE	SEE PAGE	CODE	SEE PAGE
K 3	29	**S 7**	29	**S11**	29

: JUNCTION BLOCK AND WIRE HARNESS CONNECTOR

CODE	SEE PAGE	JUNCTION BLOCK AND WIRE HARNESS (CONNECTOR LOCATION)
1I	20	COWL WIRE AND J/B NO.1 (LEFT KICK PANEL)
1J		
1K		

▽ : GROUND POINTS

CODE	SEE PAGE	GROUND POINTS LOCATION
IE	36	LEFT KICK PANEL

K 3

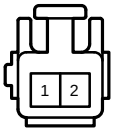

S 7

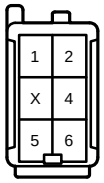

S11 BLUE

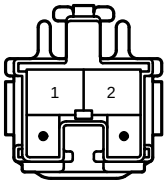

CIGARETTE LIGHTER AND CLOCK

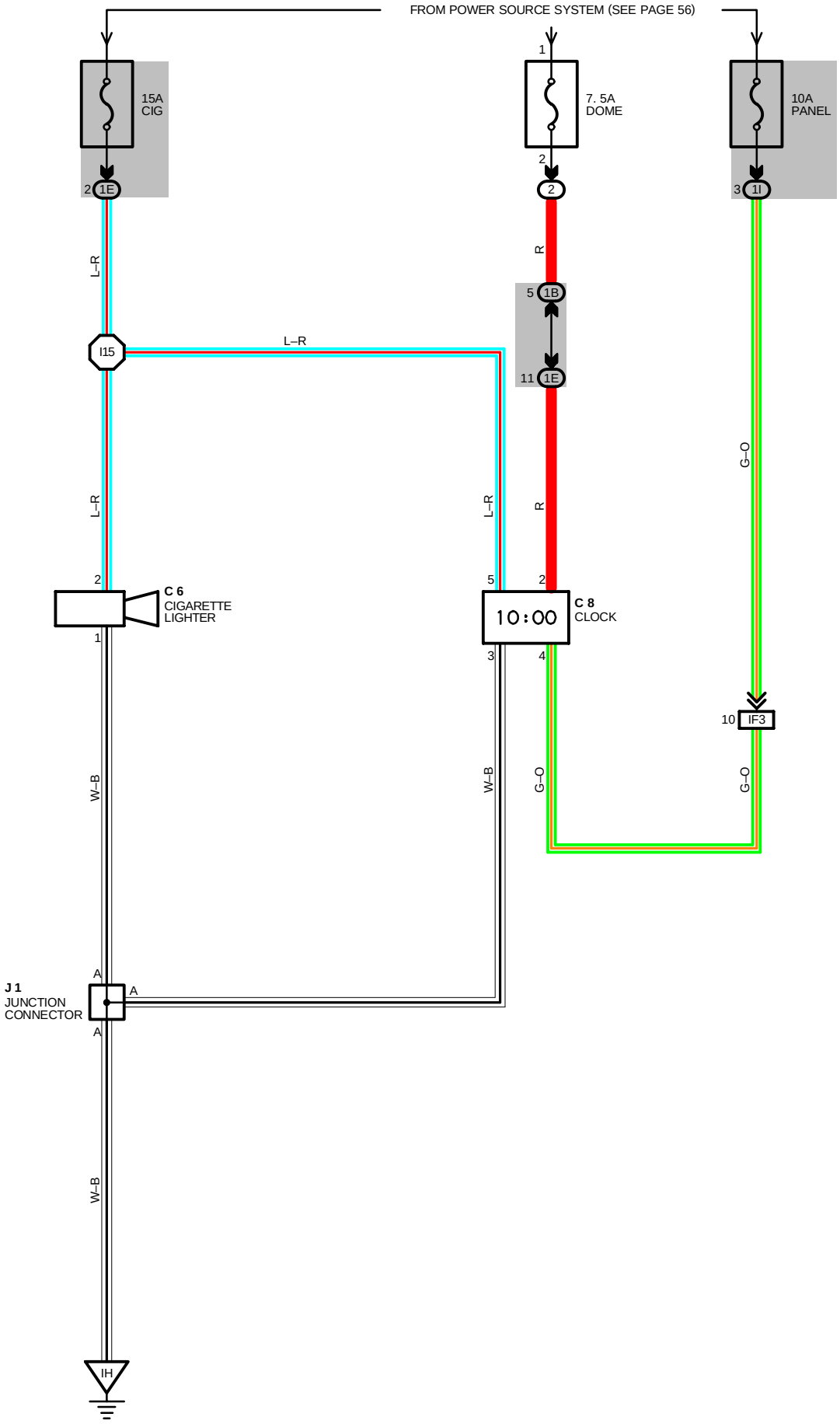

SERVICE HINTS

C 6 CIGARETTE LIGHTER

2–GROUND : APPROX. **12** VOLTS WITH IGNITION SW AT **ACC** OR **ON** POSITION
1–GROUND : ALWAYS CONTINUOUS

C 8 CLOCK

2–GROUND : ALWAYS **12** VOLTS (POWER FOR CLOCK)
5–GROUND : APPROX. **12** VOLTS WITH IGNITION SW AT **ACC** OR **ON** POSITION (POWER FOR INDICATION)
3–GROUND : ALWAYS CONTINUOUS

: PARTS LOCATION

CODE	SEE PAGE	CODE	SEE PAGE	CODE	SEE PAGE
C 6	28	**C 8**	28	**J 1**	29

: RELAY BLOCKS

CODE	SEE PAGE	RELAY BLOCKS (RELAY BLOCK LOCATION)
2	22	R/B NO. 2 (ENGINE COMPARTMENT LEFT)

: JUNCTION BLOCK AND WIRE HARNESS CONNECTOR

CODE	SEE PAGE	JUNCTION BLOCK AND WIRE HARNESS (CONNECTOR LOCATION)
1B	20	ENGINE ROOM MAIN WIRE AND J/B NO.1 (LEFT KICK PANEL)
1E	20	INSTRUMENT PANEL WIRE AND J/B NO.1 (LEFT KICK PANEL)
1I	20	COWL WIRE AND J/B NO.1 (LEFT KICK PANEL)

: CONNECTOR JOINING WIRE HARNESS AND WIRE HARNESS

CODE	SEE PAGE	JOINING WIRE HARNESS AND WIRE HARNESS (CONNECTOR LOCATION)
IF3	36	INSTRUMENT PANEL WIRE AND COWL WIRE (RIGHT KICK PANEL)

: GROUND POINTS

CODE	SEE PAGE	GROUND POINTS LOCATION
IH	36	RIGHT KICK PANEL

: SPLICE POINTS

CODE	SEE PAGE	WIRE HARNESS WITH SPLICE POINTS	CODE	SEE PAGE	WIRE HARNESS WITH SPLICE POINTS
I15	38	INSTRUMENT PANEL WIRE			

C 6



C 8 BLACK

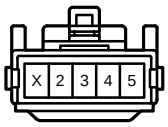

J 1

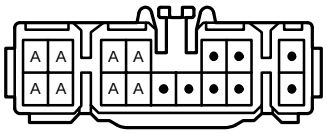

(HINT : SEE PAGE 7)

REMOTE CONTROL MIRROR

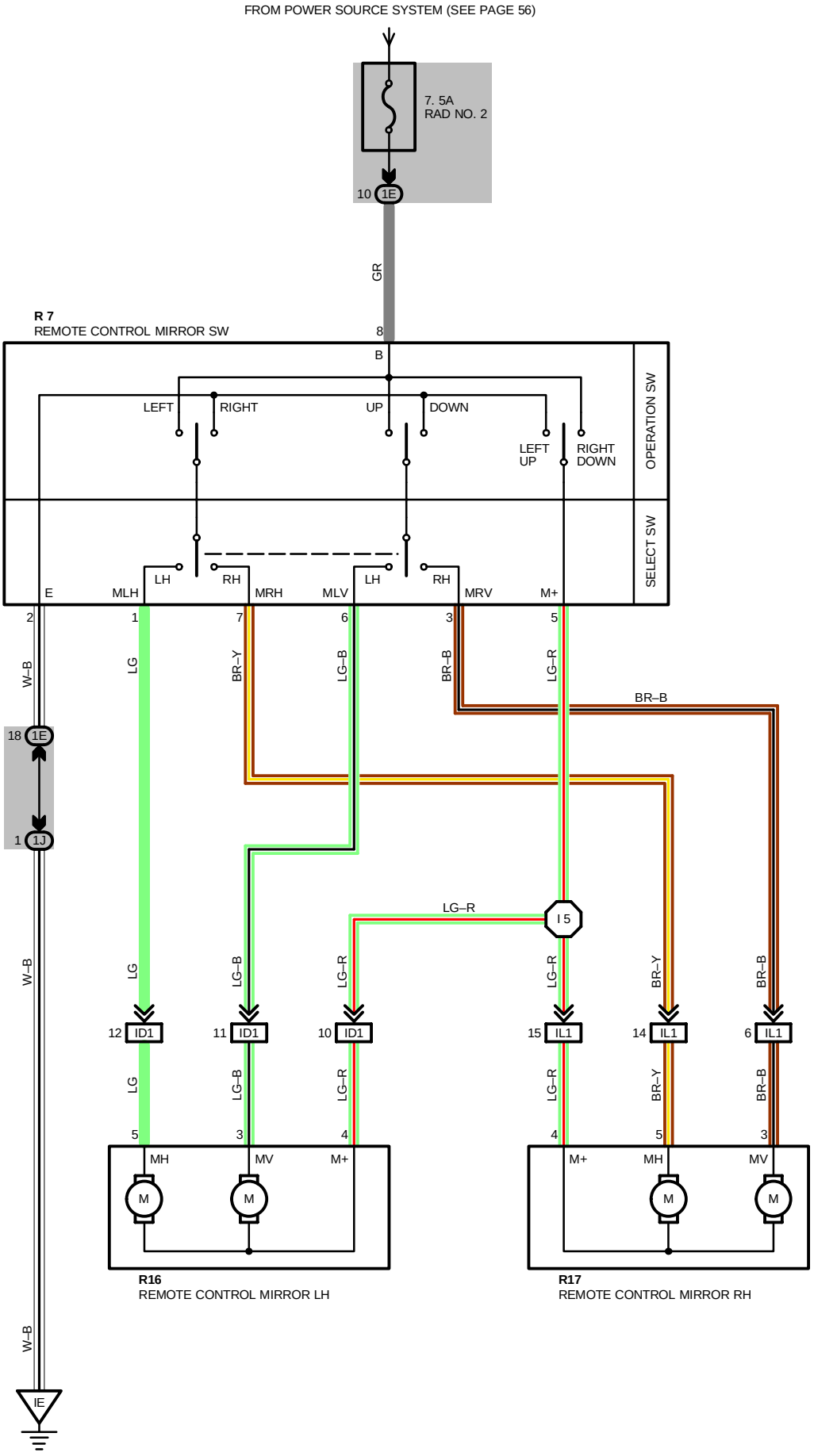

SERVICE HINTS

R 7 REMOTE CONTROL MIRROR SW

8–GROUND : APPROX. **12** VOLTS WITH IGNITION SW AT **ACC** OR **ON** POSITION
5–2 : CONTINUOUS WITH OPERATION SW AT **LEFT** OR **UP** POSITION
8–5 : CONTINUOUS WITH OPERATION SW AT **RIGHT** OR **DOWN** POSITION
2–GROUND : ALWAYS CONTINUOUS

: PARTS LOCATION

CODE	SEE PAGE	CODE	SEE PAGE	CODE	SEE PAGE
R 7	29	**R16**	30	**R17**	30

: JUNCTION BLOCK AND WIRE HARNESS CONNECTOR

CODE	SEE PAGE	JUNCTION BLOCK AND WIRE HARNESS (CONNECTOR LOCATION)
1E	20	INSTRUMENT PANEL WIRE AND J/B NO.1 (LEFT KICK PANEL)
1J	20	COWL WIRE AND J/B NO.1 (LEFT KICK PANEL)

: CONNECTOR JOINING WIRE HARNESS AND WIRE HARNESS

CODE	SEE PAGE	JOINING WIRE HARNESS AND WIRE HARNESS (CONNECTOR LOCATION)
ID1	36	FRONT DOOR LH WIRE AND INSTRUMENT PANEL WIRE (LEFT KICK PANEL)
IL1	38	FRONT DOOR RH WIRE AND INSTRUMENT PANEL WIRE (RIGHT KICK PANEL)

: GROUND POINTS

CODE	SEE PAGE	GROUND POINTS LOCATION
IE	36	LEFT KICK PANEL

: SPLICE POINTS

CODE	SEE PAGE	WIRE HARNESS WITH SPLICE POINTS	CODE	SEE PAGE	WIRE HARNESS WITH SPLICE POINTS
I 5	38	INSTRUMENT PANEL WIRE			

R 7

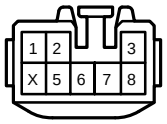

R16

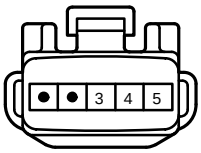

R17

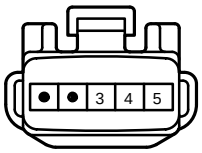

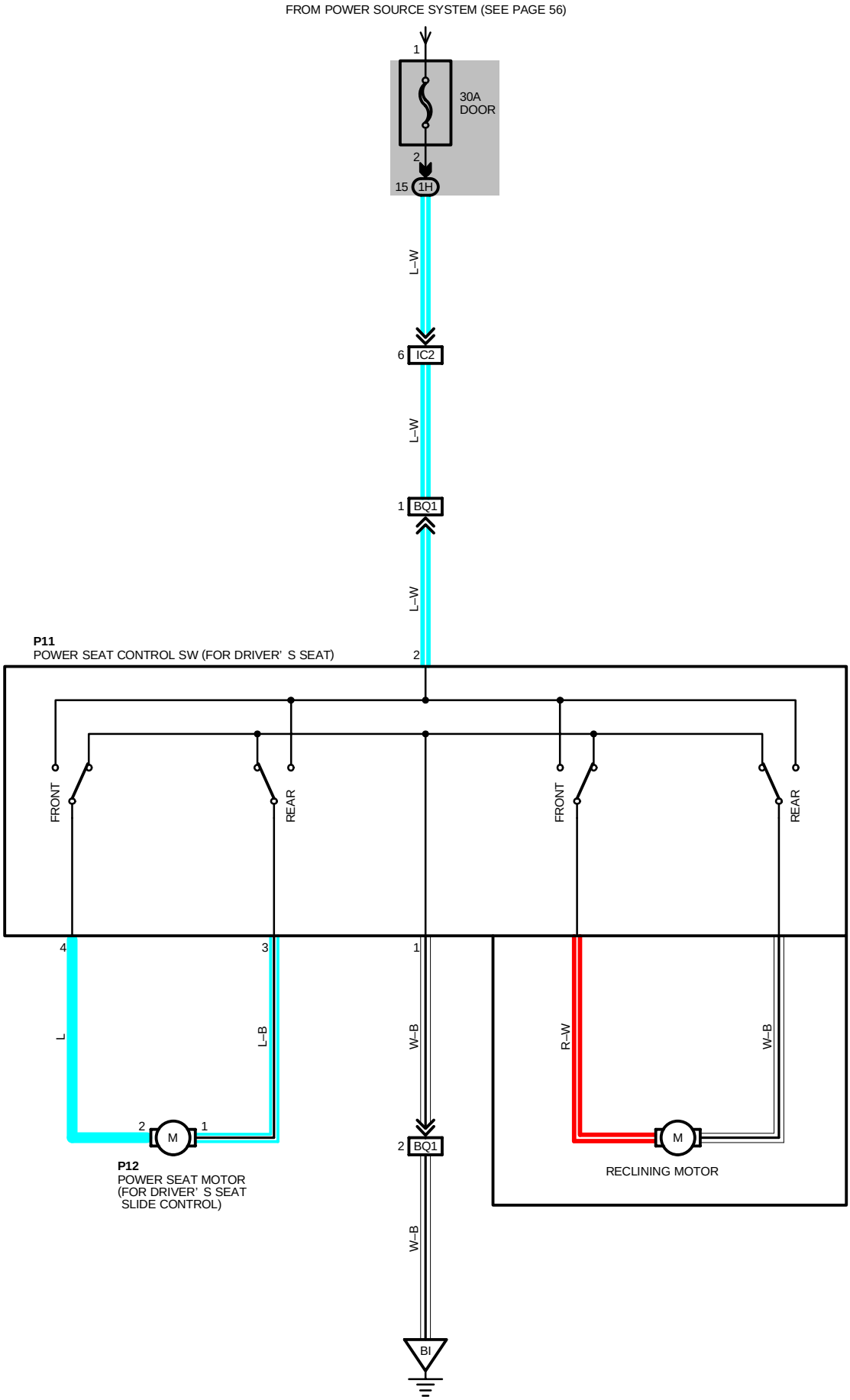
FROM POWER SOURCE SYSTEM (SEE PAGE 56)
1
30A
DOOR
2
15
1H
L–W
6
IC2
L–W
1
BQ1
L–W
P11
POWER SEAT CONTROL SW (FOR DRIVER' S SEAT)
2
FRONT
REAR
FRONT
REAR
4
3
1
L
L–B
W–B
R–W
W–B
2
M
1
2
BQ1
M
P12
POWER SEAT MOTOR
(FOR DRIVER' S SEAT
SLIDE CONTROL)
RECLINING MOTOR
W–B
BI

SERVICE HINTS

P11 POWER SEAT CONTROL SW (FOR DRIVER'S SEAT)
2– GROUND: ALWAYS APPROX. **12** VOLTS
1– GROUND: ALWAYS CONTINUOUS

: PARTS LOCATION

CODE	SEE PAGE	CODE	SEE PAGE	CODE	SEE PAGE
P11	31	**P12**	31		

: JUNCTION BLOCK AND WIRE HARNESS CONNECTOR

CODE	SEE PAGE	JUNCTION BLOCK AND WIRE HARNESS (CONNECTOR LOCATION)
1H	20	COWL WIRE AND J/B NO.1 (LEFT KICK PANEL)

: CONNECTOR JOINING WIRE HARNESS AND WIRE HARNESS

CODE	SEE PAGE	JOINING WIRE HARNESS AND WIRE HARNESS (CONNECTOR LOCATION)
IC2	36	FLOOR NO. 2 WIRE AND COWL WIRE (LEFT KICK PANEL)
BQ1	42	FLOOR NO. 2 WIRE AND SEAT WIRE (UNDER THE FRONT LH SEAT)

: GROUND POINTS

CODE	SEE PAGE	GROUND POINTS LOCATION
BI	40	LEFT QUARTER PILLAR

P11

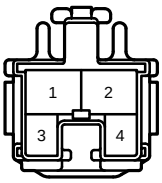

P12

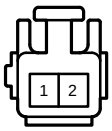

SEAT HEATER (FOR CANADA)

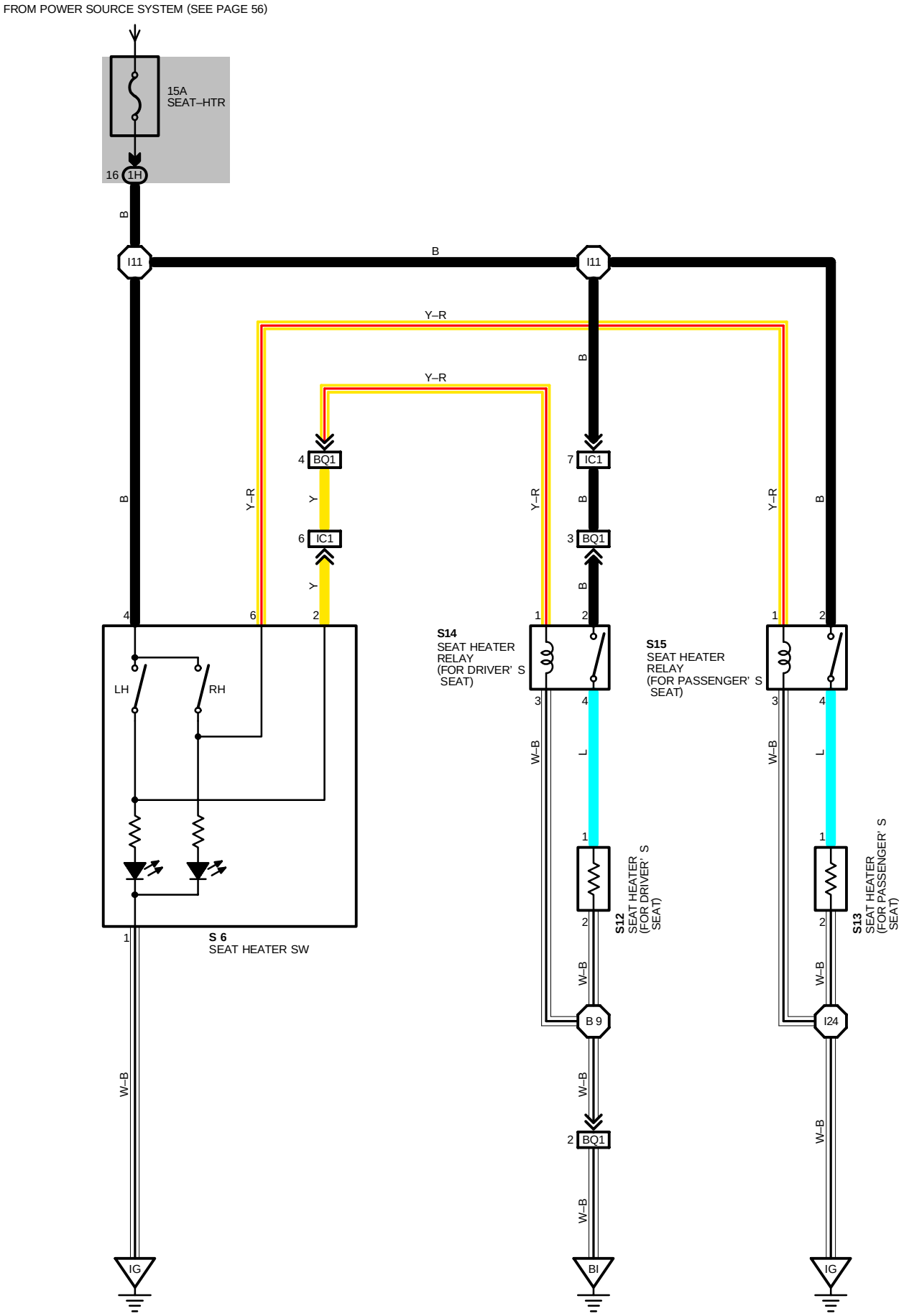

SERVICE HINTS

S 6 SEAT HEATER SW

4–GROUND : APPROX. **12** VOLTS WITH IGNITION SW AT **ON** POSITION

1–GROUND : ALWAYS CONTINUOUS

: PARTS LOCATION

CODE	SEE PAGE	CODE	SEE PAGE	CODE	SEE PAGE
S 6	29	**S13**	31	**S15**	31
S12	31	**S14**	31		

: JUNCTION BLOCK AND WIRE HARNESS CONNECTOR

CODE	SEE PAGE	JUNCTION BLOCK AND WIRE HARNESS (CONNECTOR LOCATION)
1H	20	COWL WIRE AND J/B NO. 1 (LEFT KICK PANEL)

: CONNECTOR JOINING WIRE HARNESS AND WIRE HARNESS

CODE	SEE PAGE	JOINING WIRE HARNESS AND WIRE HARNESS (CONNECTOR LOCATION)
IC1	36	FLOOR NO. 2 WIRE AND COWL WIRE (LEFT KICK PANEL)
BQ1	42	FLOOR NO. 2 WIRE AND SEAT WIRE (UNDER THE FRONT LH SEAT)

: GROUND POINTS

CODE	SEE PAGE	GROUND POINTS LOCATION
IG	36	RIGHT KICK PANEL
BI	40	LEFT QUARTER PILLAR

: SPLICE POINTS

CODE	SEE PAGE	WIRE HARNESS WITH SPLICE POINTS	CODE	SEE PAGE	WIRE HARNESS WITH SPLICE POINTS
I11	38	COWL WIRE	**B 9**	42	SEAT WIRE
I24					

S 6 BLACK

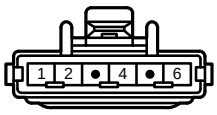

S12 BLUE

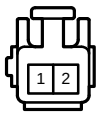

S13 BLUE

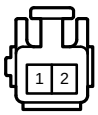

S14



S15



UNLOCK AND SEAT BELT WARNING

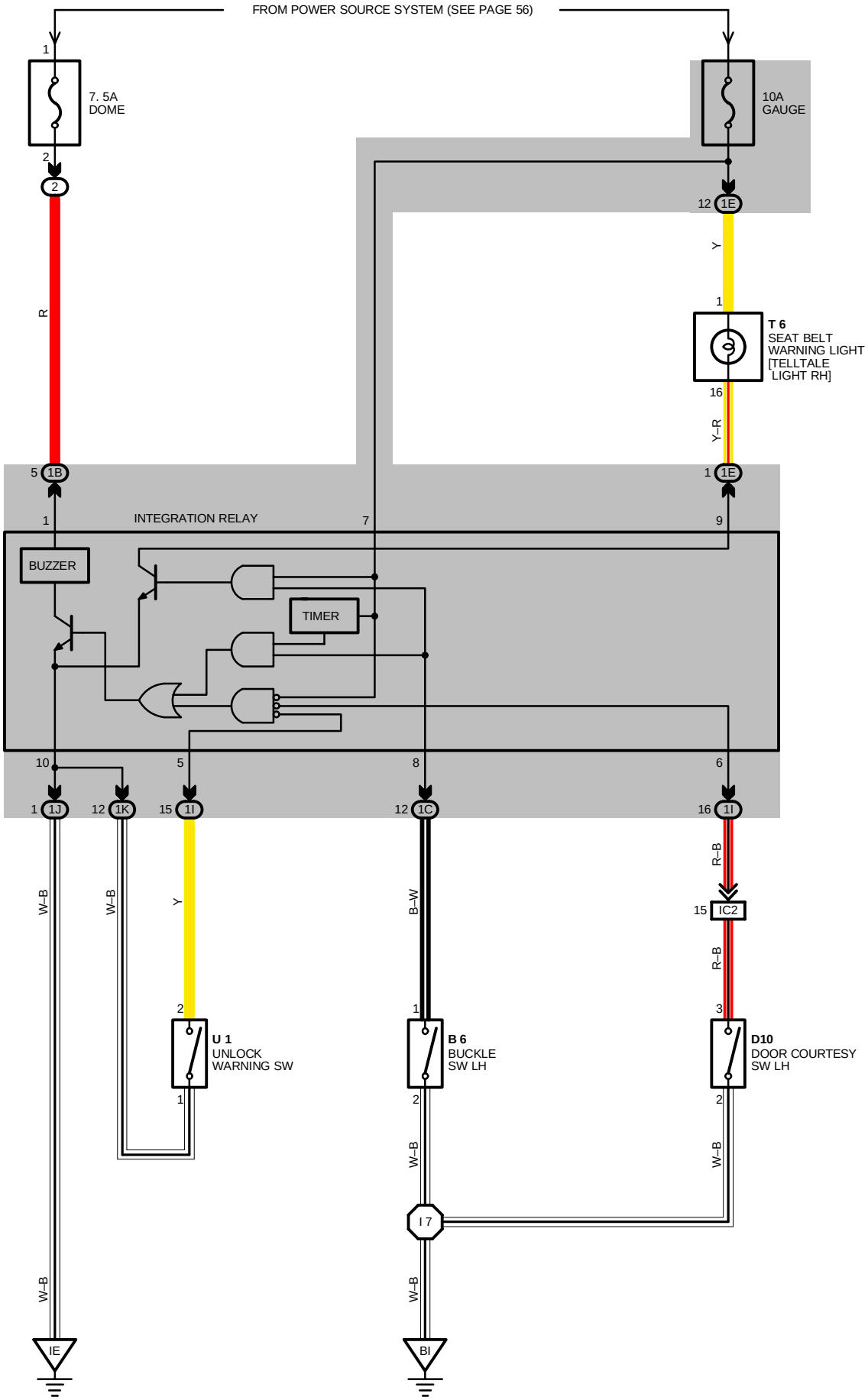

SYSTEM OUTLINE

CURRENT ALWAYS FLOWS TO **TERMINAL 1** OF THE INTEGRATION RELAY THROUGH **DOME** FUSE.

1. SEAT BELT WARNING SYSTEM

WHEN THE IGNITION SW IS TURNED ON, CURRENT FLOWS FROM THE **GAUGE** FUSE TO **TERMINAL 7** OF THE INTEGRATION RELAY. AT THE SAME TIME, CURRENT FLOWS TO **TERMINAL 9** OF THE RELAY FROM THE **GAUGE** FUSE THROUGH THE SEAT BELT WARNING LIGHT. THIS CURRENT ACTIVATES THE INTEGRATION RELAY AND CURRENT FLOWING THROUGH THE WARNING LIGHT FLOWS FROM **TERMINAL 9** OF THE RELAY → **TERMINAL 10** → **GROUND**, CAUSING THE WARNING LIGHT TO LIGHT UP. A BUCKLE SW OFF SIGNAL IS INPUT TO **TERMINAL 8** OF THE RELAY, THE CURRENT FLOWING TO **TERMINAL 7** OF THE RELAY FLOWS THROUGH **TERMINAL 10** → **GROUND** AND THE SEAT BELT WARNING BUZZER SOUNDS FOR APPROX. **4–8** SECONDS. HOWEVER, IF THE SEAT BELT IS PUT ON DURING THIS PERIOD (WHILE THE BUZZER IS SOUNDING), SIGNAL INPUT TO **TERMINAL 8** OF RELAY STOPS AND THE CURRENT FLOW FROM **TERMINAL 7** OF THE RELAY → **TERMINAL 10** → **GROUND** IS CUT, CAUSING THE BUZZER TO STOP.

2. UNLOCK WARNING SYSTEM

WITH THE IGNITION KEY INSERTED IN THE KEY CYLINDER (UNLOCK SW ON), THE IGNITION SW STILL OFF AND DRIVER'S DOOR OPENS (DOOR COURTESY SW ON), WHEN A SIGNAL IS INPUT TO **TERMINAL 6** OF THE RELAY, THE INTEGRATION RELAY OPERATES, CURRENT FLOWS FROM **TERMINAL 7** OF THE RELAY → **TERMINAL 10** → **GROUND** AND UNLOCK WARNING BUZZER SOUNDS.

SERVICE HINTS

B 6 BUCKLE SW LH
1–2 : CLOSED WITH DRIVER'S SEAT BELT IN USE

D10 DOOR COURTESY SW LH
3–2 : CLOSED WITH LH DOOR OPEN

U 1 UNLOCK WARNING SW
2–1 : CLOSED WITH IGNITION KEY IN CYLINDER

INTEGRATION RELAY
10–GROUND : ALWAYS CONTINUOUS
6–GROUND : CONTINUOUS WITH DRIVER'S DOOR OPEN
5–GROUND : CONTINUOUS WITH IGNITION KEY IN CYLINDER
8–GROUND : CONTINUOUS WITH DRIVER'S SEAT BELT IN USE
9–GROUND : **0** VOLTS WITH IGNITION SW ON AND BUCKLE SW OFF
1–GROUND : ALWAYS APPROX. **12** VOLTS

: PARTS LOCATION

CODE	SEE PAGE	CODE	SEE PAGE	CODE	SEE PAGE
B 6	28	**T 6**	29		
D10	30	**U 1**	29		

: RELAY BLOCKS

CODE	SEE PAGE	RELAY BLOCKS (RELAY BLOCK LOCATION)
2	22	R/B NO. 2 (ENGINE COMPARTMENT LEFT)

: JUNCTION BLOCK AND WIRE HARNESS CONNECTOR

CODE	SEE PAGE	JUNCTION BLOCK AND WIRE HARNESS (CONNECTOR LOCATION)
1B	20	ENGINE ROOM MAIN WIRE AND J/B NO. 1 (LEFT KICK PANEL)
1C	20	FLOOR NO. 2 WIRE AND J/B NO. 1 (LEFT KICK PANEL)
1E	20	INSTRUMENT PANEL WIRE AND J/B NO. 1 (LEFT KICK PANEL)
1I	20	COWL WIRE AND J/B NO. 1 (LEFT KICK PANEL)
1J		
1K		

: CONNECTOR JOINING WIRE HARNESS AND WIRE HARNESS

CODE	SEE PAGE	JOINING WIRE HARNESS AND WIRE HARNESS (CONNECTOR LOCATION)
IC2	36	FLOOR NO. 2 WIRE AND COWL WIRE (LEFT KICK PANEL)

: GROUND POINTS

CODE	SEE PAGE	GROUND POINTS LOCATION
IE	36	LEFT KICK PANEL
BI	40	LEFT QUARTER PILLAR

: SPLICE POINTS

CODE	SEE PAGE	WIRE HARNESS WITH SPLICE POINTS	CODE	SEE PAGE	WIRE HARNESS WITH SPLICE POINTS
I 7	38	FLOOR NO. 2 WIRE			

UNLOCK AND SEAT BELT WARNING

B 6

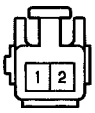

D10

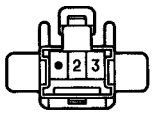

T 6

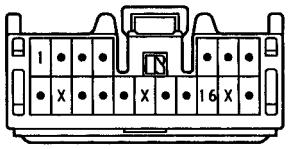

U 1 BLACK

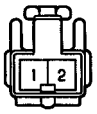

NOTICE: When inspecting or repairing the SRS (supplemental restraint system), perform the operation in accordance with the following precautionary instructions and the procedure and precautions in the Repair Manual for the applicable model year.

- Malfunction symptoms of the supplemental restraint system are difficult to confirm, so the diagnostic trouble codes become the most important source of information when troubleshooting.

  When troubleshooting the supplemental restraint system, always inspect the diagnostic trouble codes before disconnecting the battery.

- Work must be started after 90 seconds from the time the Ignition SW is set to the “LOCK” position and the negative (–) terminal cable is disconnected from the battery.

  (The supplemental restraint system is equipped with a back–up power source so that if work is started within 90 seconds of disconnecting the negative (–) terminal cable of the battery, the SRS may be activated.)

  When the negative (–) terminal cable is disconnected from the battery, memory of the clock and audio systems will be cancelled. So before starting work, make a record of the contents memorized by each memory system. When work is finished, reset the clock and audio system as before and adjust the clock.

  To avoid erasing the memory of each memory system, never use a back–up power supply from outside the vehicle.

- When removing the steering wheel pad or handling a new steering wheel pad, keep the pad upper surface facing upward. Also, lock the lock lever of the twin lock type connector at the rear of the pad and take care not to damage the connector.

  (Storing the pad with its metallic surface up may lead to a serious accident if the SRS inflates for some reason.)

- Always store a removed or new front passenger airbag assembly with the airbag door facing up. Storing the airbag assembly with the airbag door facing down could cause a serious accident if the airbag inflates.

- Store the steering wheel pad where the ambient temperature remains below 93˚C (200˚F), without high humidity and away from electrical noise.

- Never use SRS parts from another vehicle. When replacing SRS parts, replace them with new parts.

- Never disassemble and repair the steering wheel pad, front passenger airbag assembly, center airbag sensor assembly or front airbag sensors.

- Before repairing the body, remove the airbag sensors if during repair shocks are likely to be applied to the sensors due to vibration of the body or direct tapping with tools or other parts.

- Do not reuse a steering wheel pad or front airbag sensors.

  After evaluating whether the center airbag sensor assembly is damaged or not, decide whether or not to reuse it. (See the Repair Manual for the method for evaluating the center airbag sensor assembly.)

- When troubleshooting the supplemental restraint system, use a high–impedance (Min. 10k /V) tester.

- The wire harness of the supplemental restraint system is integrated with the cowl No. 2 wire harness assembly.

  The vehicle wiring harness exclusively for the airbag system is distinguished by corrugated yellow tubing, as are the connectors.

- Do not measure the resistance of the airbag squibs.

  (It is possible this will deploy the airbag and is very dangerous.)

- If the wire harness used in the supplemental restraint system is damaged, replace the whole wire harness assembly.

  When the connector to the front airbag sensors can be repaired alone (when there is no damage to the wire harness), use the repair wire specially designed for the purpose.

  (Refer to the Repair Manual for the applicable Model year for details of the replacement method.)

- INFORMATION LABELS (NOTICES) are attached to the periphery of the SRS components. Follow the instructions on the notices.

The supplemental restraint system has connectors which possess the functions described below:

1. SRS ACTIVATION PREVENTION MECHANISM

   Each connector contains a short spring plate. When the connector is disconnected, the short spring plate automatically connects the power source and grounding terminals of the squib to preclude a potential difference between the terminals.

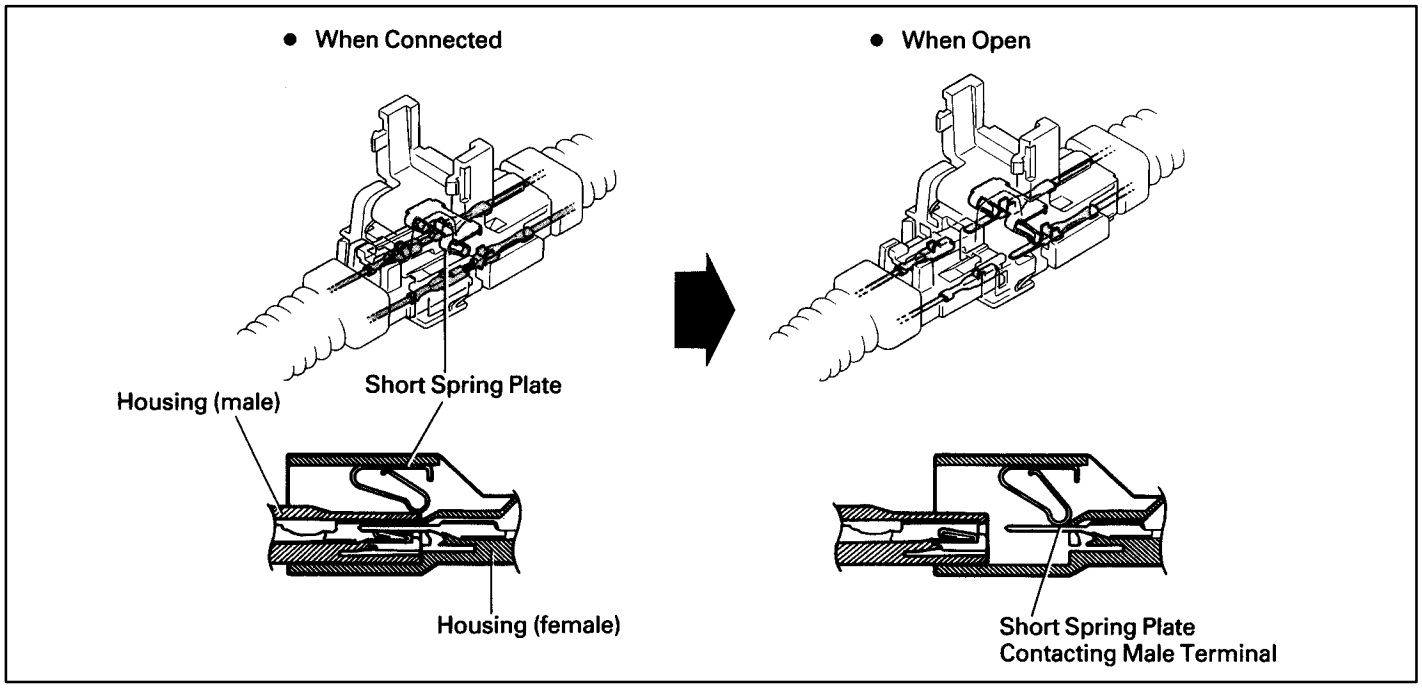

2. ELECTRICAL CONNECTION CHECK MECHANISM

   This mechanism is designed to electrically check if connectors are connected correctly and completely.

   The electrical connection check mechanism is designed so that the connection detection pin connects with the diagnosis terminals when the connector housing lock is in the locked condition.

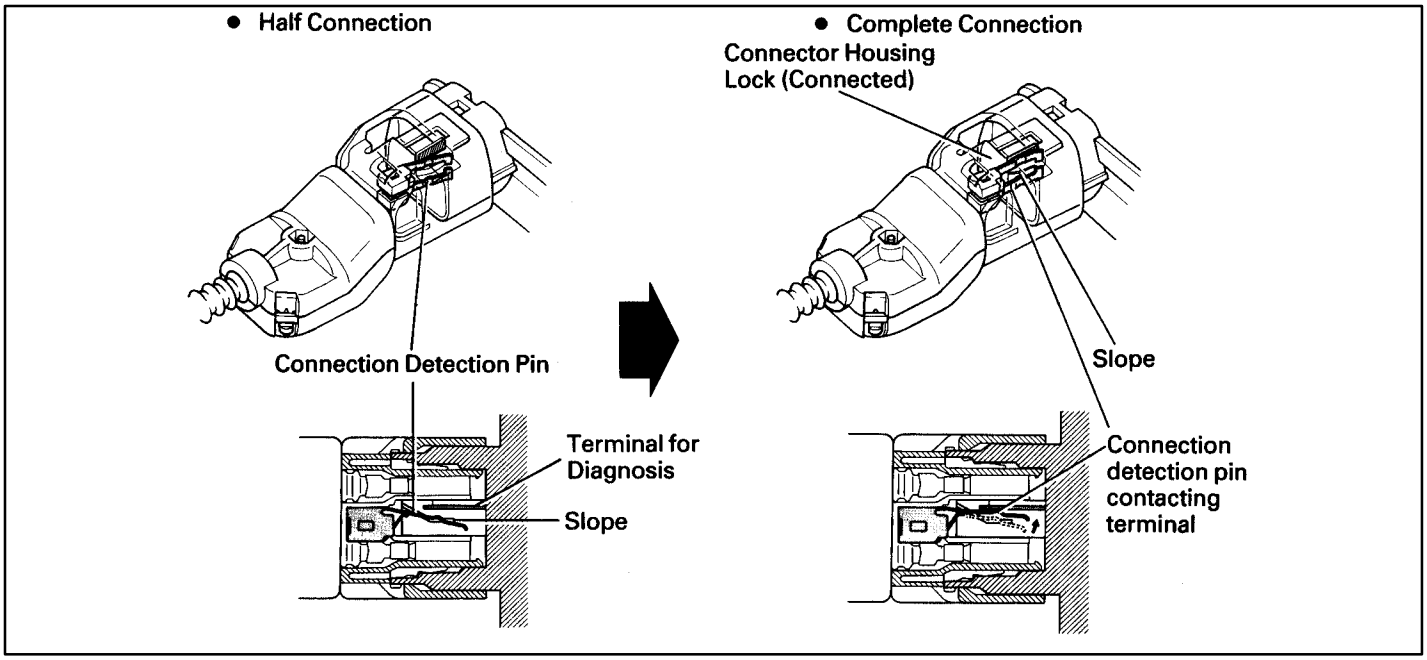

3. CONNECTOR TWIN–LOCK MECHANISM

With this mechanism connectors (male and female connectors) are locked by two locking devices to increase connection reliability. If the primary lock is incomplete, ribs interfere and prevent the secondary lock.

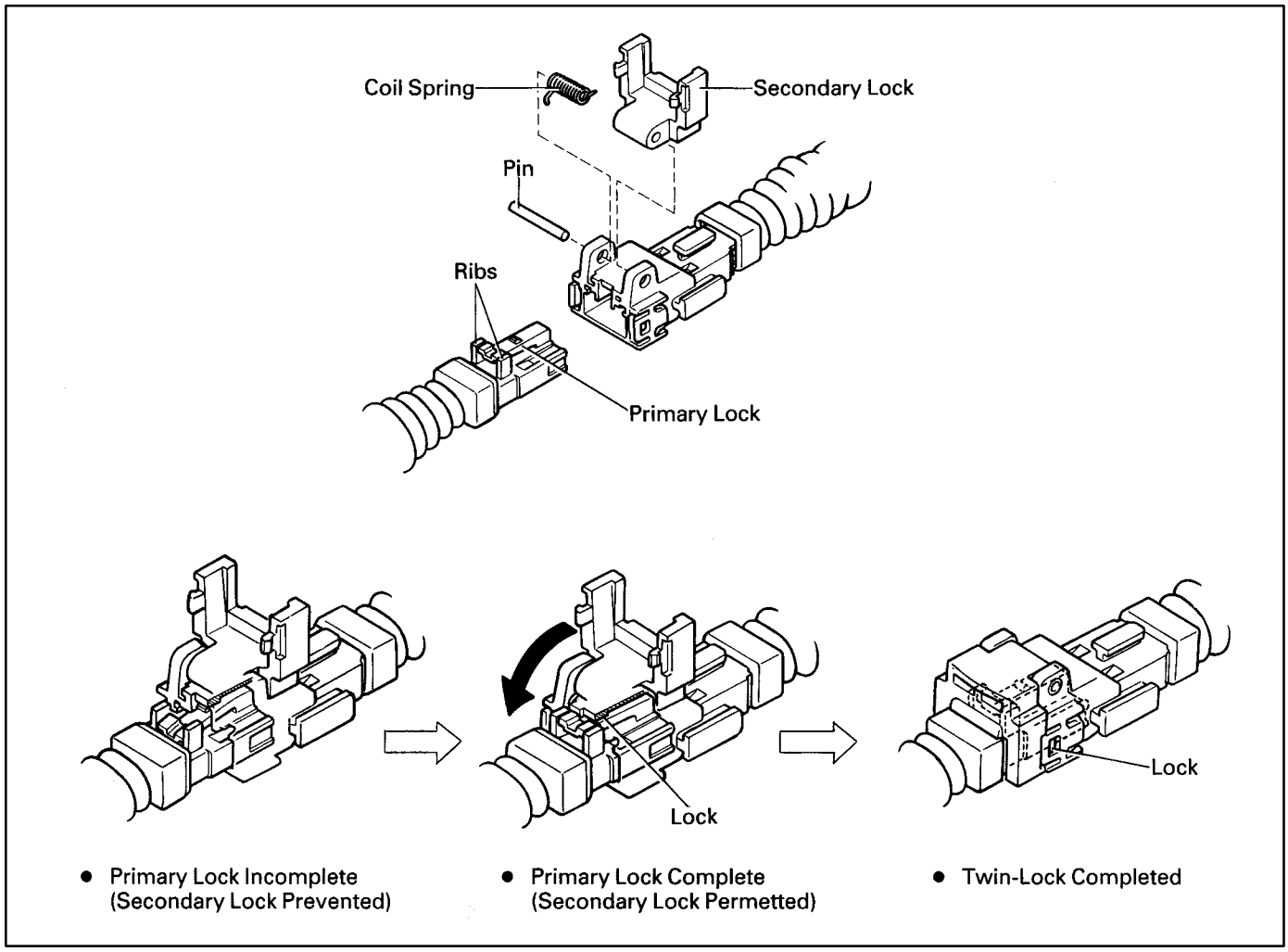

SRS (SUPPLEMENTAL RESTRAINT SYSTEM)

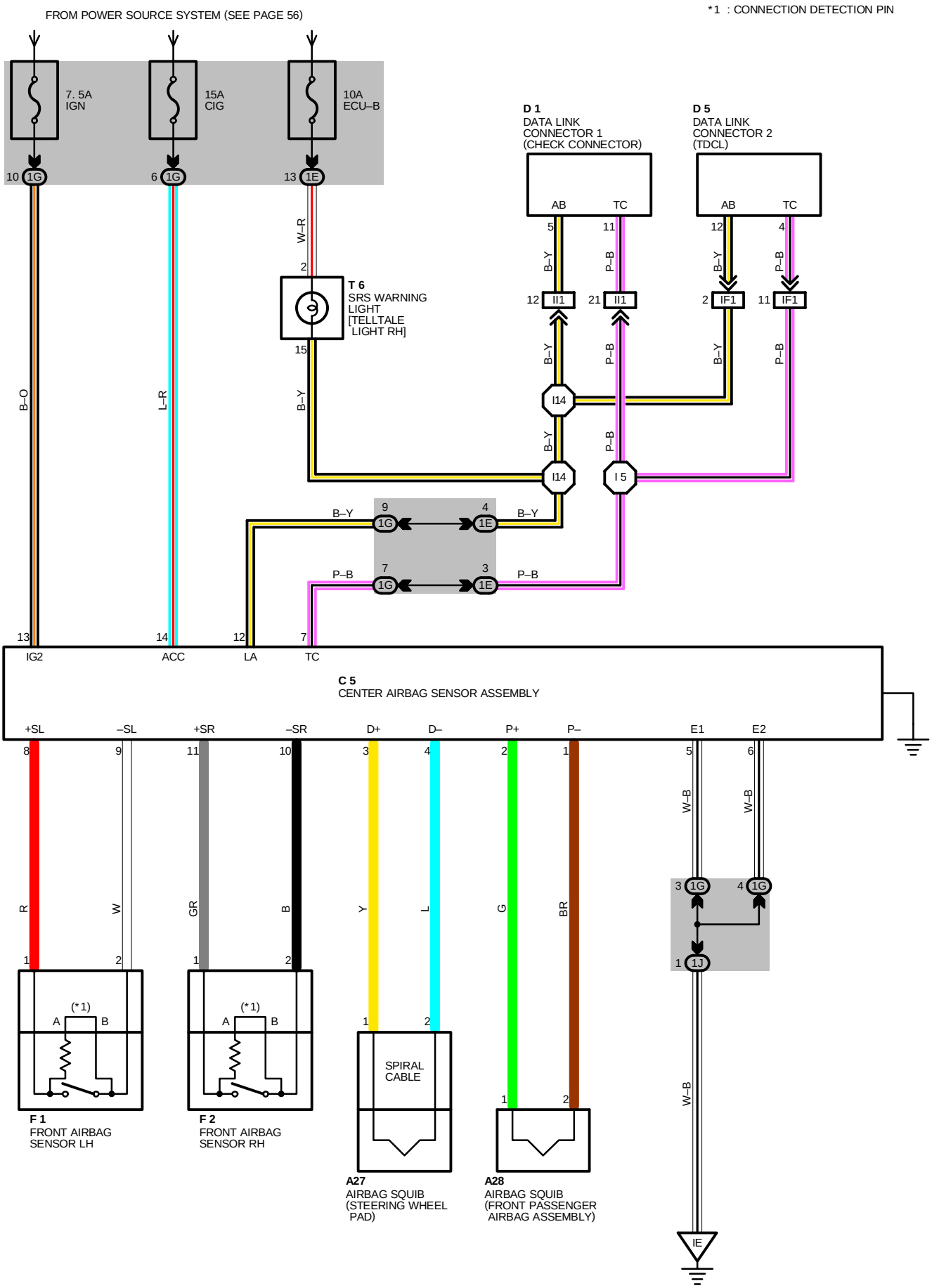

SYSTEM OUTLINE

∗ THE SRS (SUPPLEMENTAL RESTRAINT SYSTEM) IS A DRIVER AND FRONT PASSENGER PROTECTION DEVICE WHICH HAS A SUPPLEMENTAL ROLE TO THE SEAT BELTS.

WHEN THE IGNITION SW IS TURNED TO ACC OR ON, CURRENT FROM THE **CIG** FUSE FLOWS TO **TERMINAL 14** OF THE CENTER AIRBAG SENSOR ASSEMBLY. ONLY WHEN THE IGNITION SW IS ON, THE CURRENT FLOWS FROM THE **IGN** FUSE TO **TERMINAL 13**.

IF AN ACCIDENT OCCURS WHILE DRIVING, WHEN DECELERATION CAUSED BY A FRONTAL IMPACT IS DETECTED BY EACH SENSOR AND SWITCH, AND THE FRONTAL IMPACT EXCEEDS A SET LEVEL (WHEN THE SAFING SENSOR BUILT INTO THE CENTER AIRBAG SENSOR ASSEMBLY IS ON AND THE CENTER AIRBAG SENSOR IS ON, FRONT AIRBAG SENSORS ARE OFF), CURRENT FROM THE **CIG** OR **IGN** FUSE FLOWS TO **TERMINALS 3**, **2,** OF THE CENTER AIRBAG SENSOR ASSEMBLY → **TERMINAL 1** OF THE AIRBAG SQUIB → **TERMINAL 2** → **TERMINALS 4**, **1,** OF THE CENTER AIRBAG SENSOR ASSEMBLY → **TERMINAL 5**, **TERMINAL 6** OR **BODY GROUND** → **GROUND.**

WHEN THE SAFING SENSOR BUILT INTO THE CENTER AIRBAG SENSOR ASSEMBLY IS ON AND THE FRONT AIRBAG SENSOR LH OR RH IS ON, CENTER AIRBAG SENSOR IS OFF AND CURRENT FROM THE **CIG** OR **IGN** FUSE FLOWS TO **TERMINALS 3**, **2**, OF THE CENTER AIRBAG SENSOR ASSEMBLY → **TERMINAL 1** OF THE AIRBAG SQUIB → **TERMINAL 2** → **TERMINALS 4**, **1**, OF THE CENTER AIRBAG SENSOR ASSEMBLY → **TERMINAL 8** OR **11** → **TERMINAL 1** OF THE FRONT AIRBAG SENSOR → **TERMINAL 2** → **TERMINAL 9** OR **10** OF THE CENTER AIRBAG SENSOR ASSEMBLY → **TERMINAL 5**, **TERMINAL 6** OR BODY **GROUND** → **GROUND**, WHEN THE SAFING SENSOR BUILT INTO THE CENTER AIRBAG SENSOR ASSEMBLY IS ON, AND THE FRONT AIRBAG SENSOR LH OR RH IS ON AND CENTER AIRBAG SENSOR IS ON ONE OF THE ABOVE–MENTIONED CIRCUITS IS ACTIVATED SO THAT CURRENT FLOWS TO THE AIRBAG SQUIBS AND CAUSES THEN TO OPERATE.

THE AIRBAG STORED INSIDE THE STEERING WHEEL PAD IS INSTANTANEOUSLY EXPANDED TO SOFTEN THE SHOCK TO THE DRIVER.

THE AIRBAG STORED INSIDE THE PASSENGER'S INSTRUMENT PANEL IS INSTANTANEOUSLY EXPANDED TO SOFTEN THE SHOCK TO THE PASSENGER.

: PARTS LOCATION

CODE	SEE PAGE	CODE	SEE PAGE	CODE	SEE PAGE
A27	28	**D 1**	26 (2JZ–GE)	**F 2**	24 (2JZ–GTE)
A28	28	**D 5**	28		26 (2JZ–GE)
C 5	28	**F 1**	24 (2JZ–GTE)	**T 6**	29
D 1	24 (2JZ–GTE)		26 (2JZ–GE)		

: JUNCTION BLOCK AND WIRE HARNESS CONNECTOR

CODE	SEE PAGE	JUNCTION BLOCK AND WIRE HARNESS (CONNECTOR LOCATION)
1E	20	INSTRUMENT PANEL WIRE AND J/B NO. 1 (LEFT KICK PANEL)
1G	20	COWL WIRE AND J/B NO. 1 (LEFT KICK PANEL)
1J		

: CONNECTOR JOINING WIRE HARNESS AND WIRE HARNESS

CODE	SEE PAGE	JOINING WIRE HARNESS AND WIRE HARNESS (CONNECTOR LOCATION)
IF1	36	INSTRUMENT PANEL WIRE AND COWL WIRE (INSTRUMENT PANEL REINFORCEMENT LH)
II1	38	ENGINE WIRE AND INSTRUMENT PANEL WIRE (RIGHT KICK PANEL)

: GROUND POINTS

CODE	SEE PAGE	GROUND POINTS LOCATION
IE	36	LEFT KICK PANEL

: SPLICE POINTS

CODE	SEE PAGE	WIRE HARNESS WITH SPLICE POINTS	CODE	SEE PAGE	WIRE HARNESS WITH SPLICE POINTS
I 5	38	INSTRUMENT PANEL WIRE	**I14**	38	INSTRUMENT PANEL WIRE

A27 YELLOW

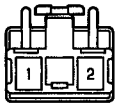

A28 YELLOW

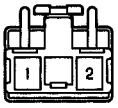

C 5 YELLOW

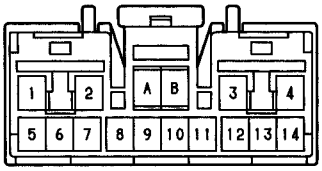

(2JZ-GTE) D 1 BLACK

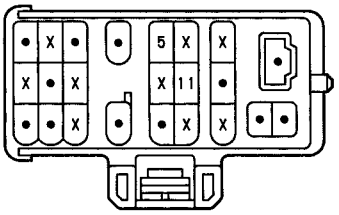

(2JZ-GE) D 1 BLACK

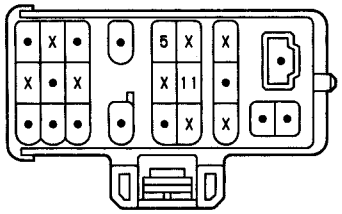

(2JZ-GTE) D 5 DARK GRAY

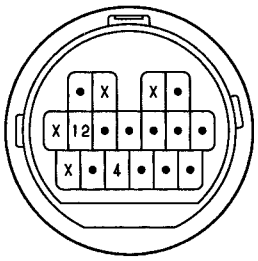

(2JZ-GE A/T) D 5 DARK GRAY

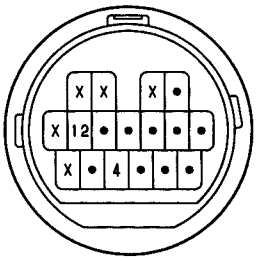

(2JZ-GE M/T) D 5 DARK GRAY

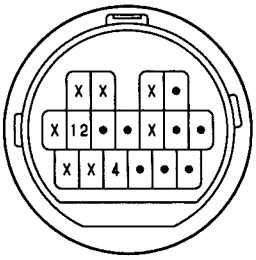

F 1 YELLOW

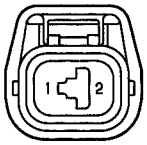

F 2 YELLOW



T 6

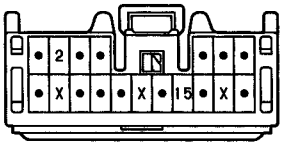

C14 BLACK

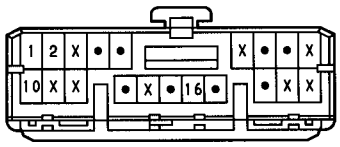

R15

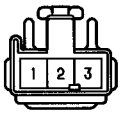

W 1 BLACK



REAR WIPER AND WASHER

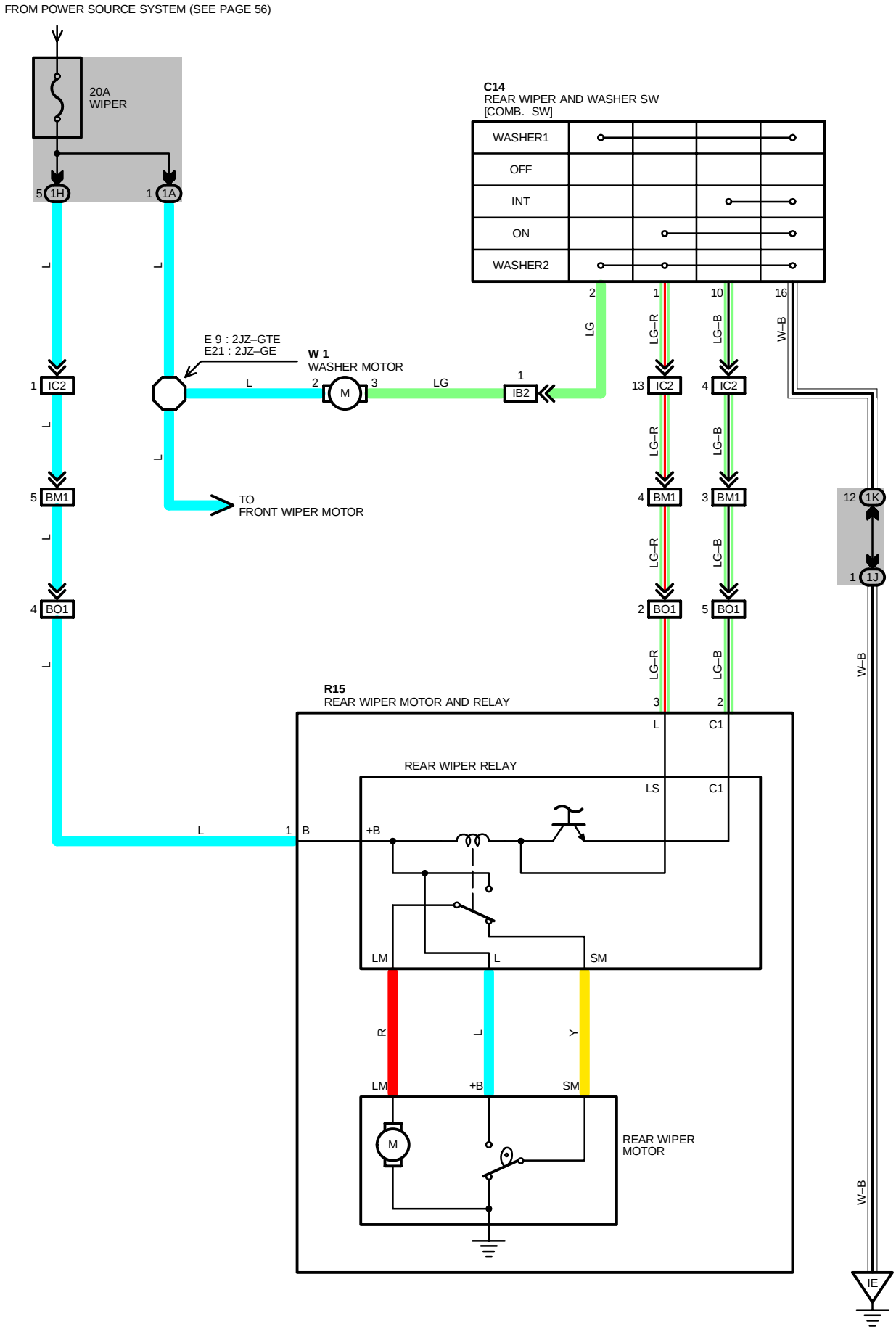

SYSTEM OUTLINE

WHEN THE IGNITION SW IS TURNED ON, CURRENT FLOWS TO **TERMINAL 2** OF THE WASHER MOTOR, **TERMINAL 1** OF THE REAR WIPER MOTOR AND RELAY THROUGH THE WIPER FUSE.

1. REAR WIPER NORMAL OPERATION

WITH THE IGNITION SW TURNED ON AND THE REAR WIPER AND WASHER SW TURNED ON, THE CURRENT FLOWING TO **TERMINAL 1** OF THE REAR WIPER RELAY FLOWS TO **TERMINAL 3** OF THE RELAY → **TERMINAL 1** OF THE REAR WIPER AND WASHER SW → **TERMINAL 16** → TO **GROUND.** THUS, THE RELAY COIL IS ACTIVATED AND THE CURRENT TO **TERMINAL 1** OF THE REALY FLOWS TO **TERMINAL LM** → **TERMINAL LM** OF THE REAR WIPER MOTOR → MOTOR → TO **GROUND** AND CAUSES THE MOTOR TO OPERATE THE WIPER.

2. REAR WIPER INTERMITTENT OPERATION

WHEN THE IGNITION SW IS ON AND THE REAR WIPER AND WASHER SW IS TURNED TO **INT** POSITION, CURRENT FLOWING TO **TERMINAL 1** OF THE REAR WIPER MOTOR AND RELAY FLOWS TO **TERMINAL 2** OF THE RELAY → **TERMINAL 10** OF THE REAR WIPER AND WASHER SW → **TERMINAL 16** → **GROUND**.

THIS CAUSES THE MOTOR TO OPERATE (THE POINT CHANGES) AND THE INTERMITTENT CIRCUIT OF THE RELAY OPERATES. INTERMITTENT OPERATION OF THE CIRCUIT IS CONTROLLED BY THE CHANGING AND DISCHARGING OF THE CONDENSER INSTALLED INSIDE THE RELAY.

3. WASHER OPERATION

WITH THE IGNITION SW TURNED ON AND THE REAR WIPER AND WASHER SW TURNED TO **ON** POSITION, WHEN THE WIPER SW IS TURNED FURTHER, THE CURRENT FLOWING TO **TERMINAL 2** OF THE WASHER MOTOR FLOWS TO **TERMINAL 3** OF THE MOTOR → **TERMINAL 2** OF THE REAR WIPER AND WASHER SW → **TERMINAL 16** → TO **GROUND**, SO THAT THE WASHER MOTOR ROTATES AND THE WINDOW WASHER EJECTS THE SPRAY, ONLY WHILE THE SWITCH IS FULLY TURNED.

WHEN THE WIPER SW IS OFF AND THEN TURNED TO WASHER ON (WIPER OFF SIDE), ONLY THE WASHER OPERATES.

SYSTEM OUTLINE

W 1 WASHER MOTOR

2–GROUND : APPROX. **12** VOLTS WITH IGNITION SW AT **ON** POSITION
3–GROUND : CONTINUOUS WITH WASHER SW TURNED ON

R15 REAR WIPER MOTOR AND RELAY

1–GROUND : APPROX. **12** VOLTS WITH IGNITION SW AT **ON** POSITION
2–GROUND : CONTINUOUS WITH REAR WIPER SW AT **INT** POSITION
3–GROUND : CONTINUOUS WITH REAR WIPER SW AT **ON** POSITION

: PARTS LOCATION

CODE	SEE PAGE	CODE	SEE PAGE	CODE	SEE PAGE
C14	28	**W 1**	25 (2JZ–GTE)		
R15	30		27 (2JZ–GE)		

: JUNCTION BLOCK AND WIRE HARNESS CONNECTOR

CODE	SEE PAGE	JUNCTION BLOCK AND WIRE HARNESS (CONNECTOR LOCATION)
1A	20	ENGINE ROOM MAIN WIRE AND J/B NO. 1 (LEFT KICK PANEL)
1H	20	COWL WIRE AND J/B NO. 1 (LEFT KICK PANEL)
1J		
1K		

: CONNECTOR JOINING WIRE HARNESS AND WIRE HARNESS

CODE	SEE PAGE	JOINING WIRE HARNESS AND WIRE HARNESS (CONNECTOR LOCATION)
IB2	36	ENGINE ROOM MAIN WIRE AND COWL WIRE (LEFT KICK PANEL)
IC2	36	FLOOR NO. 2 WIRE AND COWL WIRE (LEFT KICK PANEL)
BM1	40	BACK DOOR NO. 1 WIRE AND FLOOR NO. 2 WIRE (LEFT SIDE OF PACKAGE TRAY TRIM)
BO1	40	BACK DOOR NO. 2 WIRE AND BACK DOOR NO. 1 WIRE (BACK DOOR UPPER LEFT)

: GROUND POINTS

CODE	SEE PAGE	GROUND POINTS LOCATION
IE	36	LEFT KICK PANEL

: SPLICE POINTS

CODE	SEE PAGE	WIRE HARNESS WITH SPLICE POINTS	CODE	SEE PAGE	WIRE HARNESS WITH SPLICE POINTS
E 9	32	ENGINE ROOM MAIN WIRE	**E21**	34	ENGINE ROOM MAIN WIRE

ELECTRIC TENSION REDUCER

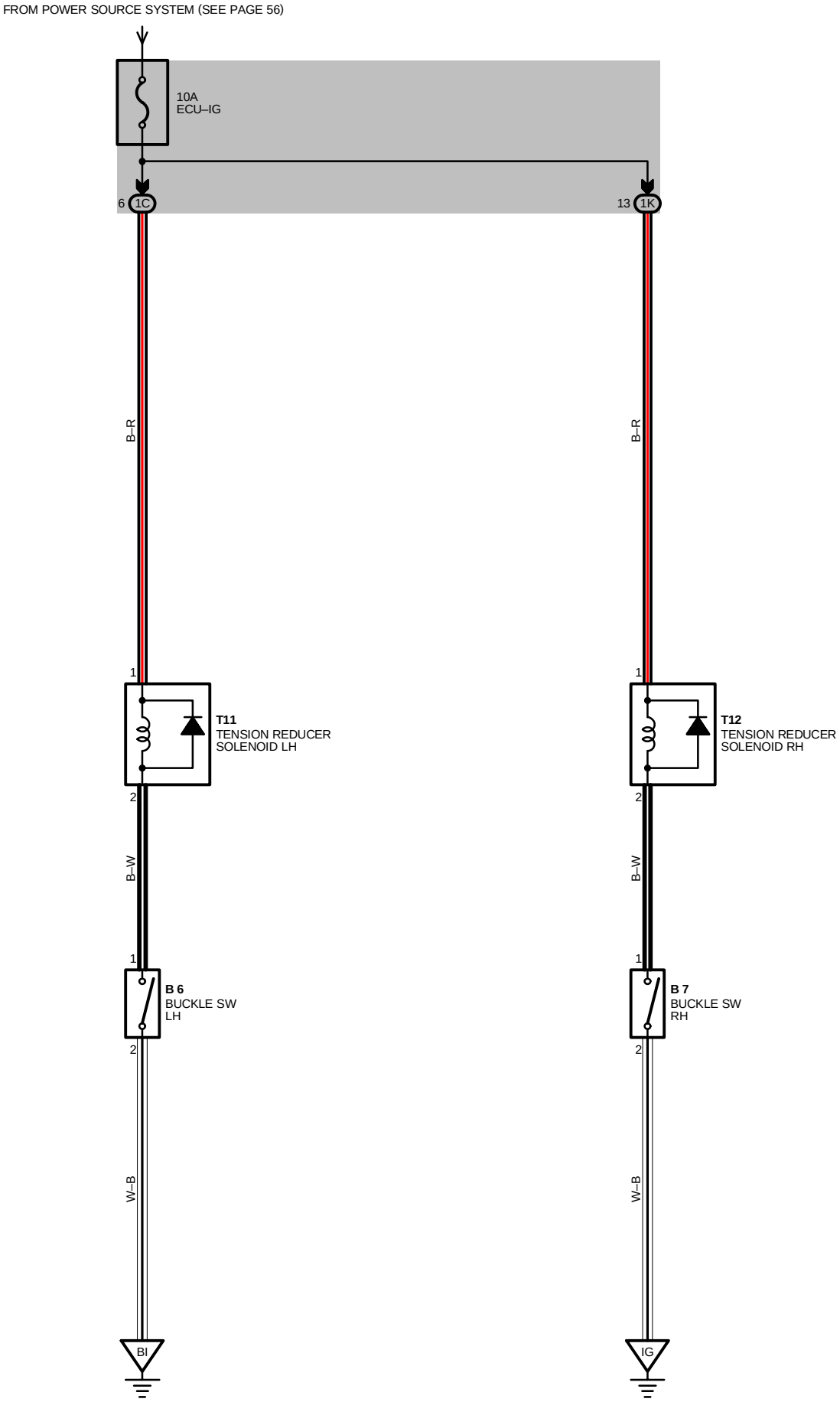

SERVICE HINTS

B 6 BUCKLE SW LH

1–2 : CLOSED WITH DRIVER'S SEAT BELT IN USE

B 7 BUCKLE SW RH

1–2 : CLOSED WITH PASSENGER'S SEAT BELT IN USE

T11, T12 TENSION REDUCER SOLENOID LH, RH

1–GROUND : APPROX. **12** VOLTS WITH IGNITION SW AT **ON** POSITION

: PARTS LOCATION

CODE	SEE PAGE	CODE	SEE PAGE	CODE	SEE PAGE
B 6	28	**T11**	30		
B 7	28	**T12**	30		

: JUNCTION BLOCK AND WIRE HARNESS CONNECTOR

CODE	SEE PAGE	JUNCTION BLOCK AND WIRE HARNESS (CONNECTOR LOCATION)
1C	20	FLOOR NO. 2 WIRE AND J/B NO.1 (LEFT KICK PANEL)
1K	20	COWL WIRE AND J/B NO.1 (LEFT KICK PANEL)

: GROUND POINTS

CODE	SEE PAGE	GROUND POINTS LOCATION
IG	36	RIGHT KICK PANEL
BI	40	LEFT QUARTER PILLAR

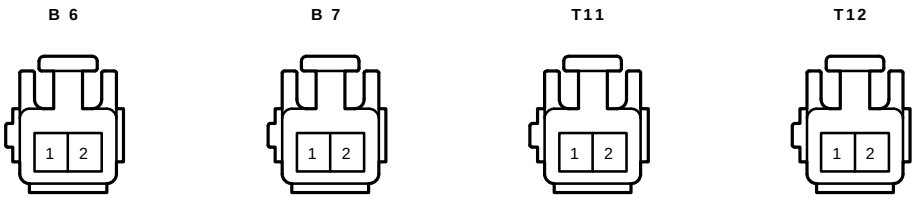

REAR WINDOW DEFOGGER AND MIRROR HEATER

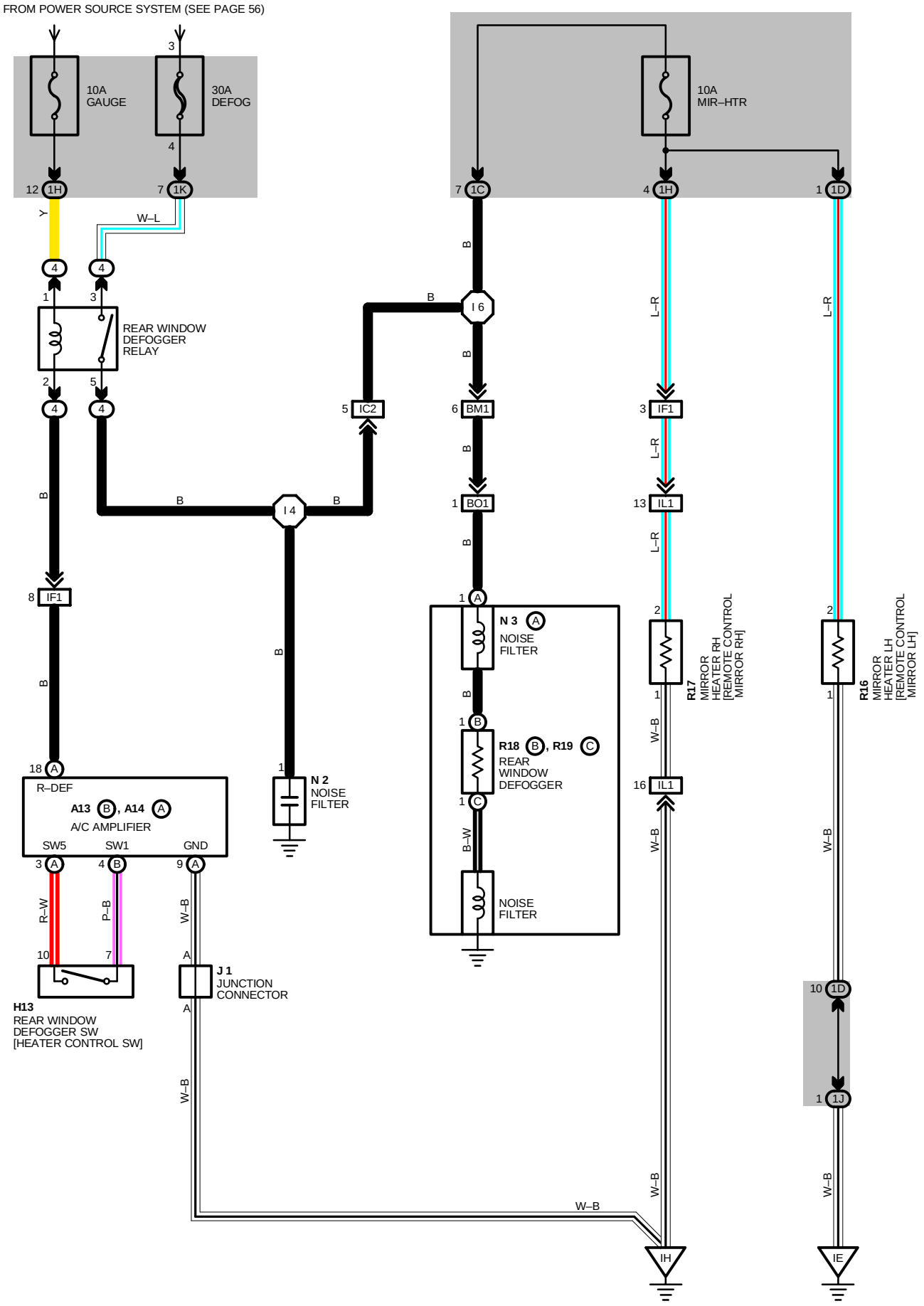

SERVICE HINTS

REAR WINDOW DEFOGGER RELAY

(4) 3 –**(4)** 5 : CLOSED WITH IGNITION SW AT **ON** POSITION AND REAR WINDOW DEFOGGER SW [HEATER CONTROL SW] **ON**

: PARTS LOCATION

CODE		SEE PAGE	CODE		SEE PAGE	CODE		SEE PAGE
A13	B	28	**N 2**		29	**R18**	B	30
A14	A	28	**N 3**	A	30	**R19**	C	30
H13		29	**R16**		30			
J 1		29	**R17**		30			

: RELAY BLOCKS

CODE	SEE PAGE	RELAY BLOCKS (RELAY BLOCK LOCATION)
4	23	R/B NO. 4 (LEFT KICK PANEL)

: JUNCTION BLOCK AND WIRE HARNESS CONNECTOR

CODE	SEE PAGE	JUNCTION BLOCK AND WIRE HARNESS (CONNECTOR LOCATION)
1C	20	FLOOR NO. 2 WIRE AND J/B NO.1 (LEFT KICK PANEL)
1D	20	FRONT DOOR LH WIRE AND J/B NO.1 (LEFT KICK PANEL)
1H	20	COWL WIRE AND J/B NO.1 (LEFT KICK PANEL)
1J		
1K		

: CONNECTOR JOINING WIRE HARNESS AND WIRE HARNESS

CODE	SEE PAGE	JOINING WIRE HARNESS AND WIRE HARNESS (CONNECTOR LOCATION)
IC2	36	FLOOR NO. 2 WIRE AND COWL WIRE (LEFT KICK PANEL)
IF1	36	INSTRUMENT PANEL WIRE AND COWL WIRE (INSTRUMENT PANEL REINFORCEMENT LH)
IL1	38	FRONT DOOR RH WIRE AND INSTRUMENT PANEL WIRE (RIGHT KICK PANEL)
BM1	40	BACK DOOR NO. 1 WIRE AND FLOOR NO. 2 WIRE (LEFT SIDE OF PACKAGE TRAY TRIM)
BO1	40	BACK DOOR NO. 2 WIRE AND BACK DOOR NO. 1 WIRE (BACK DOOR UPPER LEFT)

: GROUND POINTS

CODE	SEE PAGE	GROUND POINTS LOCATION
IE	36	LEFT KICK PANEL
IH	36	RIGHT KICK PANEL

: SPLICE POINTS

CODE	SEE PAGE	WIRE HARNESS WITH SPLICE POINTS	CODE	SEE PAGE	WIRE HARNESS WITH SPLICE POINTS
I 4	38	COWL WIRE	**I 6**	38	FLOOR NO. 2 WIRE

A13 (B) ORANGE

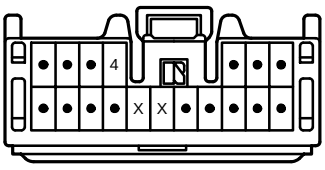

A14 (A) ORANGE

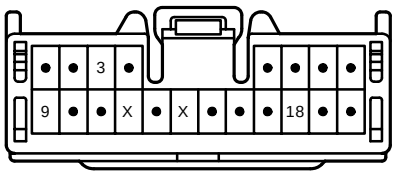

H13 ORANGE

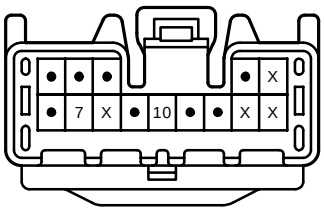

J 1

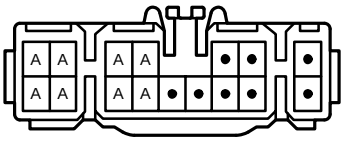

(HINT : SEE PAGE 7)

N 2, N 3 (A)

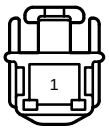

R16, R17



R18 (B) GREEN



R19 (C)



AUTO ANTENNA

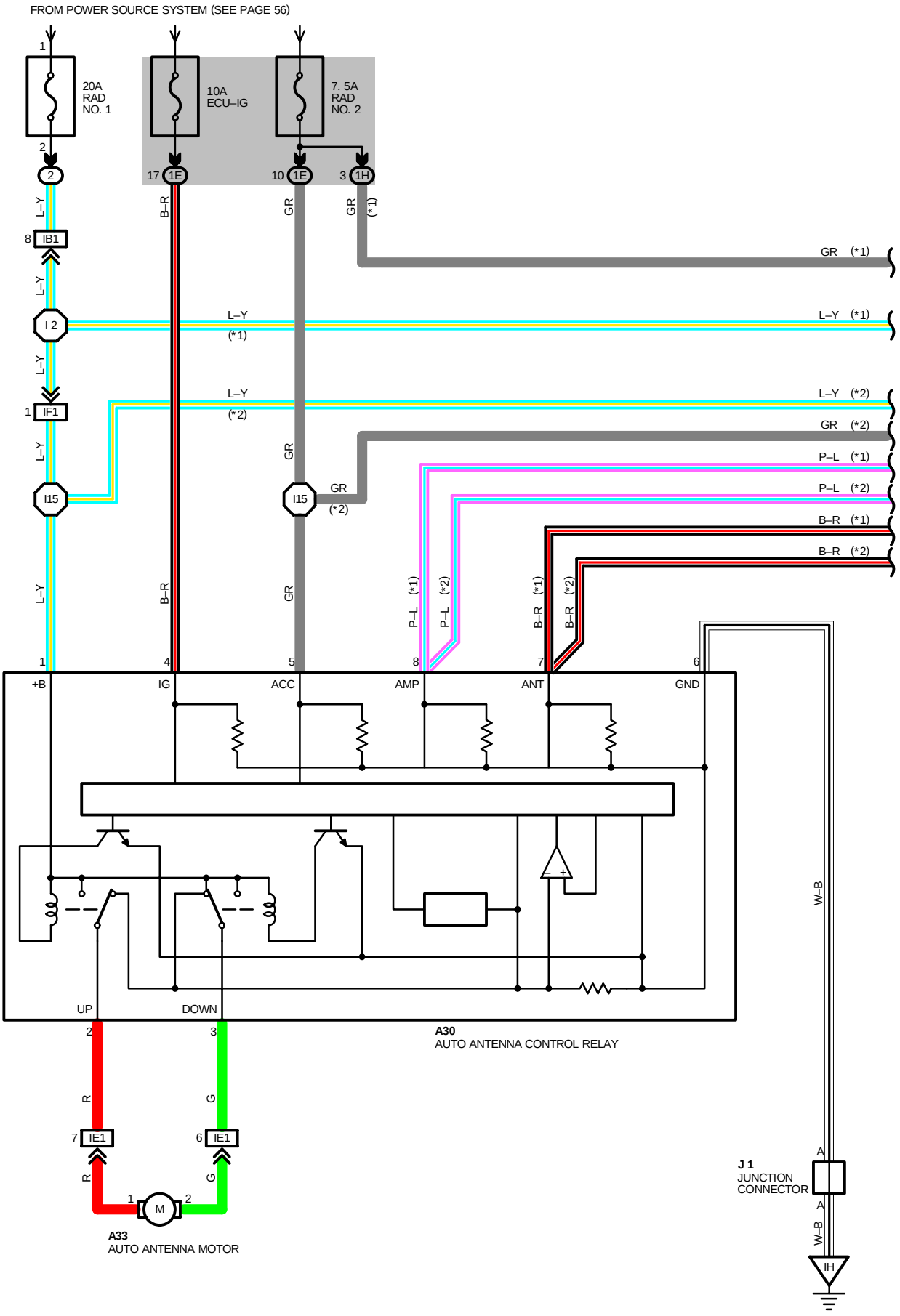

*1 : W/ STEREO POWER AMPLIFIER
*2 : W/O STEREO POWER AMPLIFIER

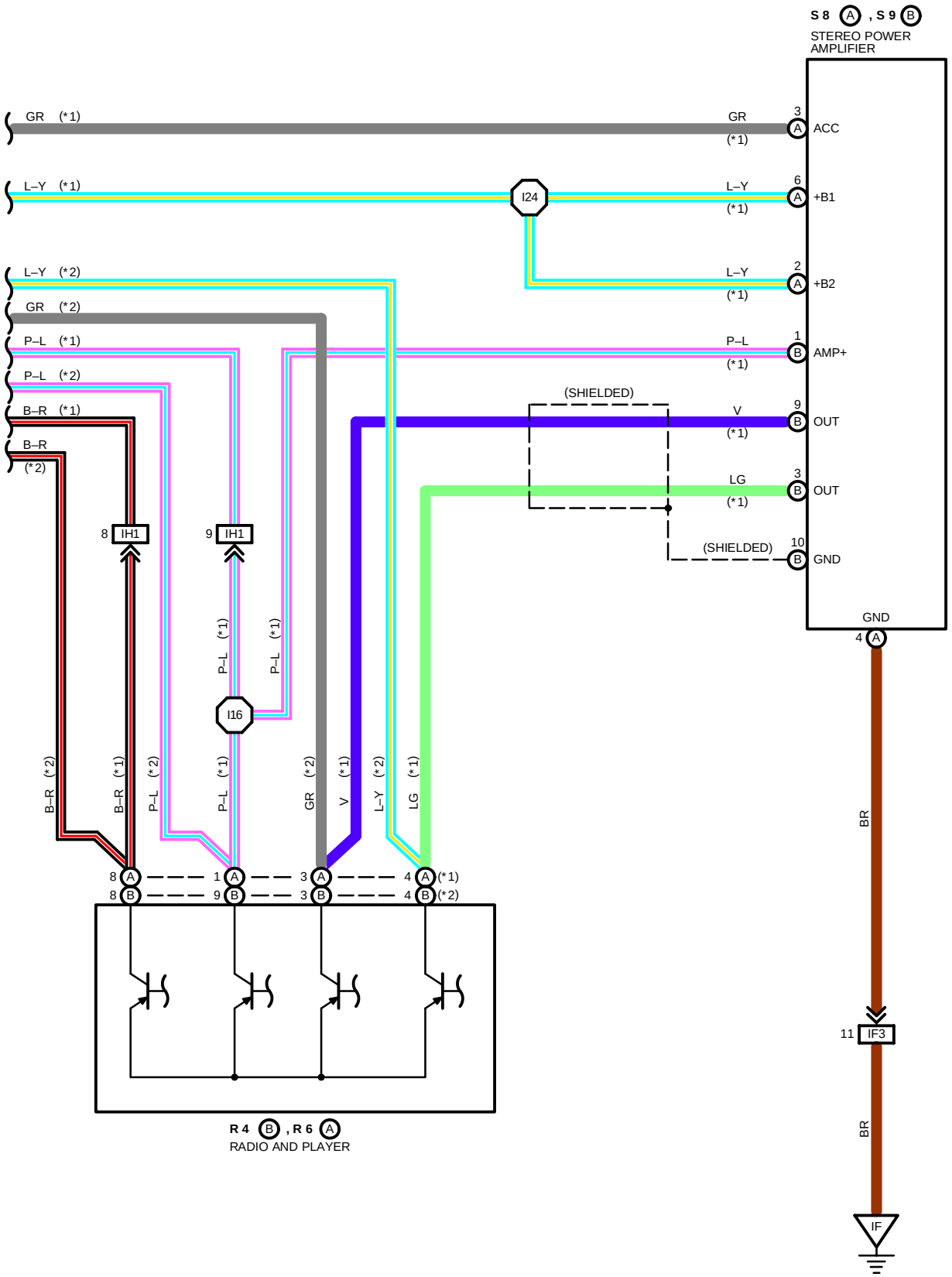

AUTO ANTENNA

SERVICE HINTS

A30 AUTO ANTENNA CONTROL RELAY
1–GROUND : ALWAYS APPROX. **12** VOLTS
4–GROUND : APPROX. **12** VOLTS WITH IGNITION SW AT **ON** POSITION
5–GROUND : APPROX. **12** VOLTS WITH IGNITION SW AT **ACC** OR **ON** POSITION
6–GROUND : ALWAYS CONTINUOUS

○ : PARTS LOCATION

CODE	SEE PAGE	CODE		SEE PAGE	CODE		SEE PAGE
A30	28	**R 4**	B	29	**S 9**	B	29
A33	30	**R 6**	A	29			
J 1	29	**S 8**	A	29			

▭ : RELAY BLOCKS

CODE	SEE PAGE	RELAY BLOCKS (RELAY BLOCK LOCATION)
2	22	R/B NO. 2 (ENGINE COMPARTMENT LEFT)

▭ : JUNCTION BLOCK AND WIRE HARNESS CONNECTOR

CODE	SEE PAGE	JUNCTION BLOCK AND WIRE HARNESS (CONNECTOR LOCATION)
1E	20	INSTRUMENT PANEL WIRE AND J/B NO.1 (LEFT KICK PANEL)
1H	20	COWL WIRE AND J/B NO.1 (LEFT KICK PANEL)

▭ : CONNECTOR JOINING WIRE HARNESS AND WIRE HARNESS

CODE	SEE PAGE	JOINING WIRE HARNESS AND WIRE HARNESS (CONNECTOR LOCATION)
IB1	36	ENGINE ROOM MAIN WIRE AND COWL WIRE (LEFT KICK PANEL)
IE1	36	INSTRUMENT PANEL WIRE AND FLOOR NO. 2 WIRE (LEFT KICK PANEL)
IF1	36	INSTRUMENT PANEL WIRE AND COWL WIRE (INSTRUMENT PANEL REINFORCEMENT LH)
IF3	36	INSTRUMENT PANEL WIRE AND COWL WIRE (RIGHT KICK PANEL)
IH1	38	INSTRUMENT PANEL WIRE AND CONSOLE BOX WIRE (UNDER THE INSTRUMENT PANEL BRACE RH)

▽ : GROUND POINTS

CODE	SEE PAGE	GROUND POINTS LOCATION
IF	36	LEFT KICK PANEL
IH	36	RIGHT KICK PANEL

⬡ : SPLICE POINTS

CODE	SEE PAGE	WIRE HARNESS WITH SPLICE POINTS	CODE	SEE PAGE	WIRE HARNESS WITH SPLICE POINTS
I 2	38	COWL WIRE	**I16**	38	CONSOLE BOX WIRE
I15	38	INSTRUMENT PANEL WIRE	**I24**	38	COWL WIRE

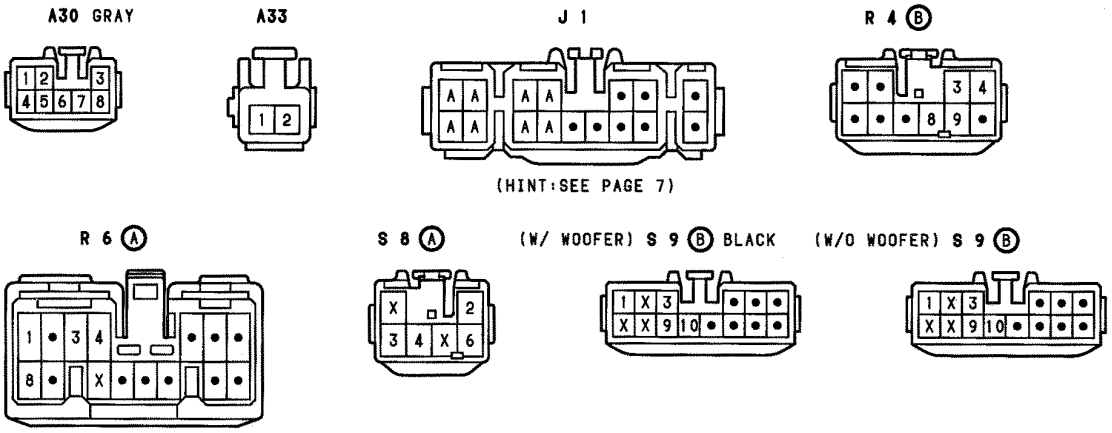

RADIO AND PLAYER (w/ STEREO POWER AMPLIFIER)

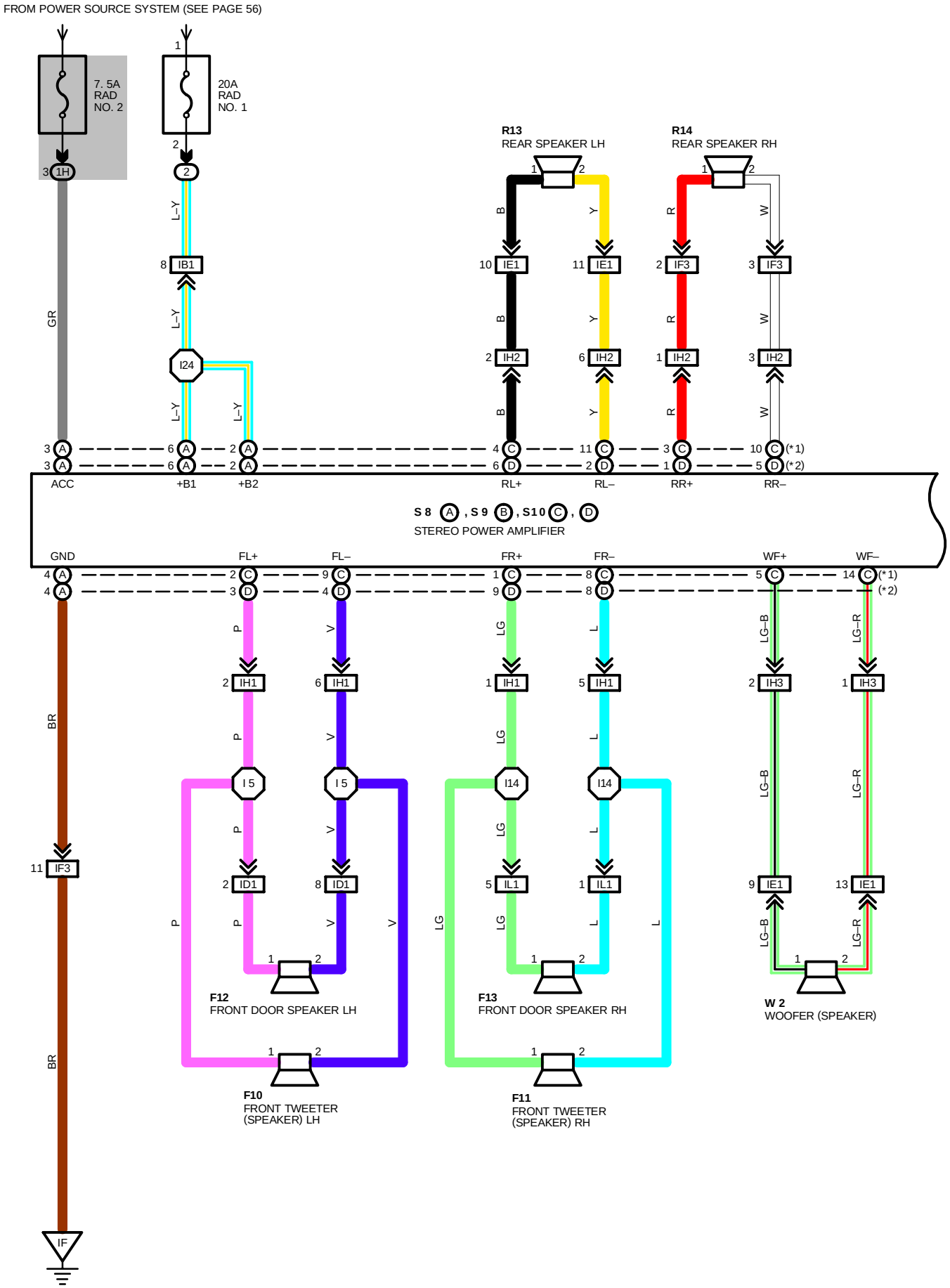

*1 : W/ WOOFER (SPEAKER)
*2 : W/O WOOFER (SPEAKER)

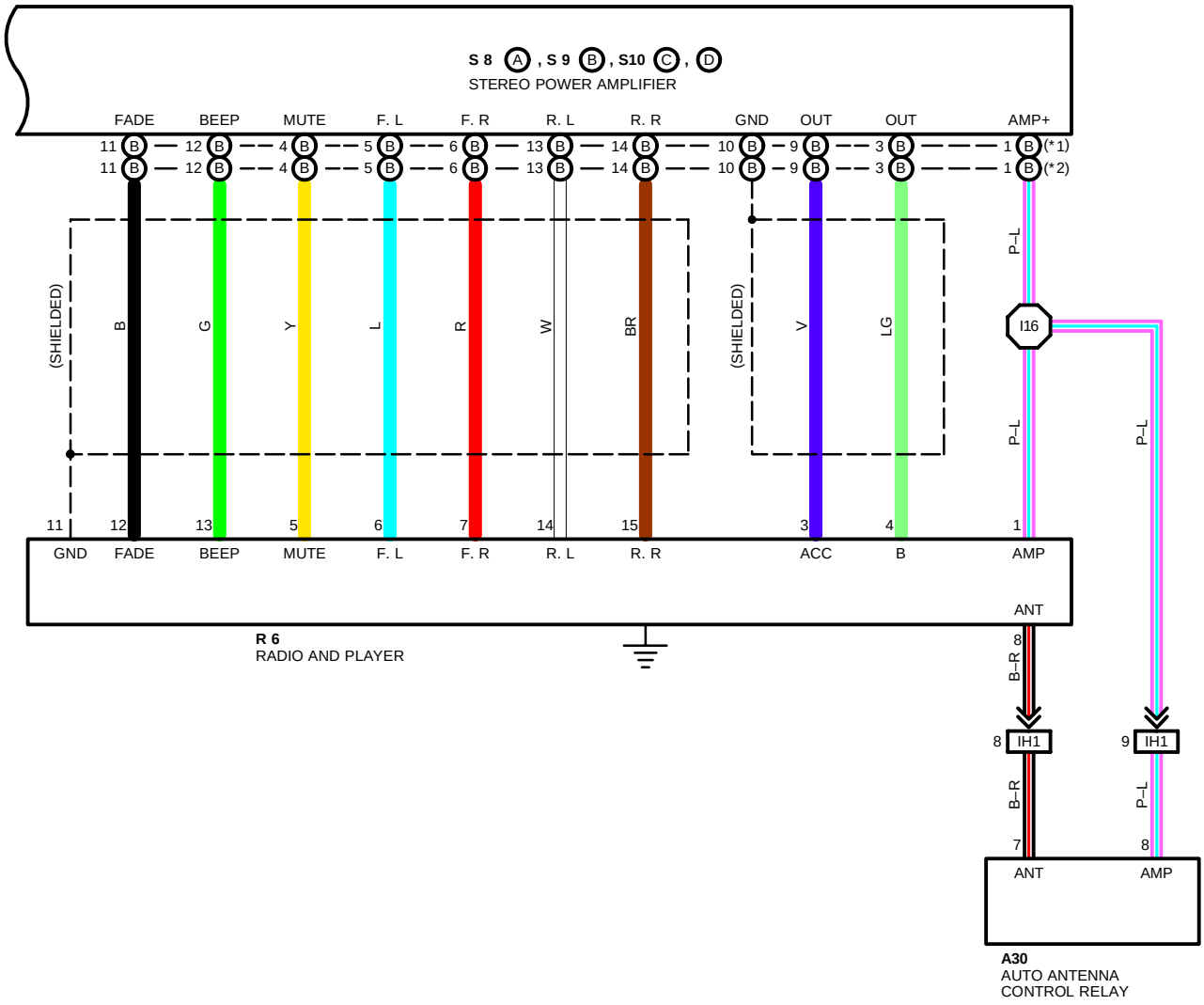

RADIO AND PLAYER (w/ STEREO POWER AMPLIFIER)

SERVICE HINTS

S 8(A) STEREO POWER AMPLIFIER
(A) 6, **(A)**2–GROUND : ALWAYS APPROX. **12** VOLTS
(A) 3–GROUND : APPROX. **12** VOLTS WITH IGNITION SW AT **ON** OR **ACC** POSITION
(A) 4–GROUND : ALWAYS CONTINUOUS

: PARTS LOCATION

CODE	SEE PAGE	CODE		SEE PAGE	CODE		SEE PAGE
A30	28	**R 6**		29	**S10**	C	29
F10	29	**R13**		30		D	29
F11	29	**R14**		30	**W 2**		30
F12	30	**S 8**	A	29			
F13	30	**S 9**	B	29			

: RELAY BLOCKS

CODE	SEE PAGE	RELAY BLOCKS (RELAY BLOCK LOCATION)
2	22	R/B NO. 2 (ENGINE COMPARTMENT LEFT)

: JUNCTION BLOCK AND WIRE HARNESS CONNECTOR

CODE	SEE PAGE	JUNCTION BLOCK AND WIRE HARNESS (CONNECTOR LOCATION)
1H	20	COWL WIRE AND J/B NO. 1 (LEFT KICK PANEL)

: CONNECTOR JOINING WIRE HARNESS AND WIRE HARNESS

CODE	SEE PAGE	JOINING WIRE HARNESS AND WIRE HARNESS (CONNECTOR LOCATION)
IB1	36	ENGINE ROOM MAIN WIRE AND COWL WIRE (LEFT KICK PANEL)
ID1	36	FRONT DOOR LH WIRE AND INSTRUMENT PANEL WIRE (LEFT KICK PANEL)
IE1	36	INSTRUMENT PANEL WIRE AND FLOOR NO. 2 WIRE (LEFT KICK PANEL)
IF3	36	INSTRUMENT PANEL WIRE AND COWL WIRE (RIGHT KICK PANEL)
IH1	38	INSTRUMENT PANEL WIRE AND CONSOLE BOX WIRE (UNDER THE INSTRUMENT PANEL BRACE RH)
IH2		
IH3		
IL1	38	FRONT DOOR RH WIRE AND INSTRUMENT PANEL WIRE (RIGHT KICK PANEL)

: GROUND POINTS

CODE	SEE PAGE	GROUND POINTS LOCATION
IF	36	LEFT KICK PANEL

: SPLICE POINTS

CODE	SEE PAGE	WIRE HARNESS WITH SPLICE POINTS	CODE	SEE PAGE	WIRE HARNESS WITH SPLICE POINTS
I 5	38	INSTRUMENT PANEL WIRE	**I16**	38	CONSOLE BOX WIRE
I14			**I24**	38	COWL WIRE

*1 : W/ WOOFER (SPEAKER)
*2 : W/O WOOFER (SPEAKER)

A30 GRAY



F10



F11



F12



F13



R 6

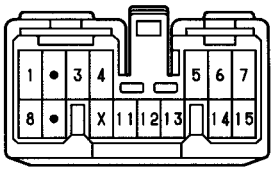

R13



R14



S 8 (A)



(*1) S 9 (B) BLACK

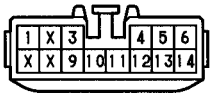

(*2) S 9 (B)

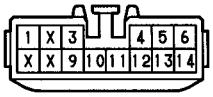

(*1) S10 (C) BLACK

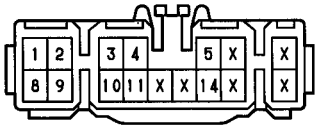

(*2) S10 (D)

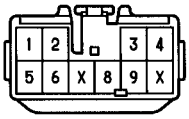

W 2



RADIO AND PLAYER (w/o STEREO POWER AMPLIFIER)

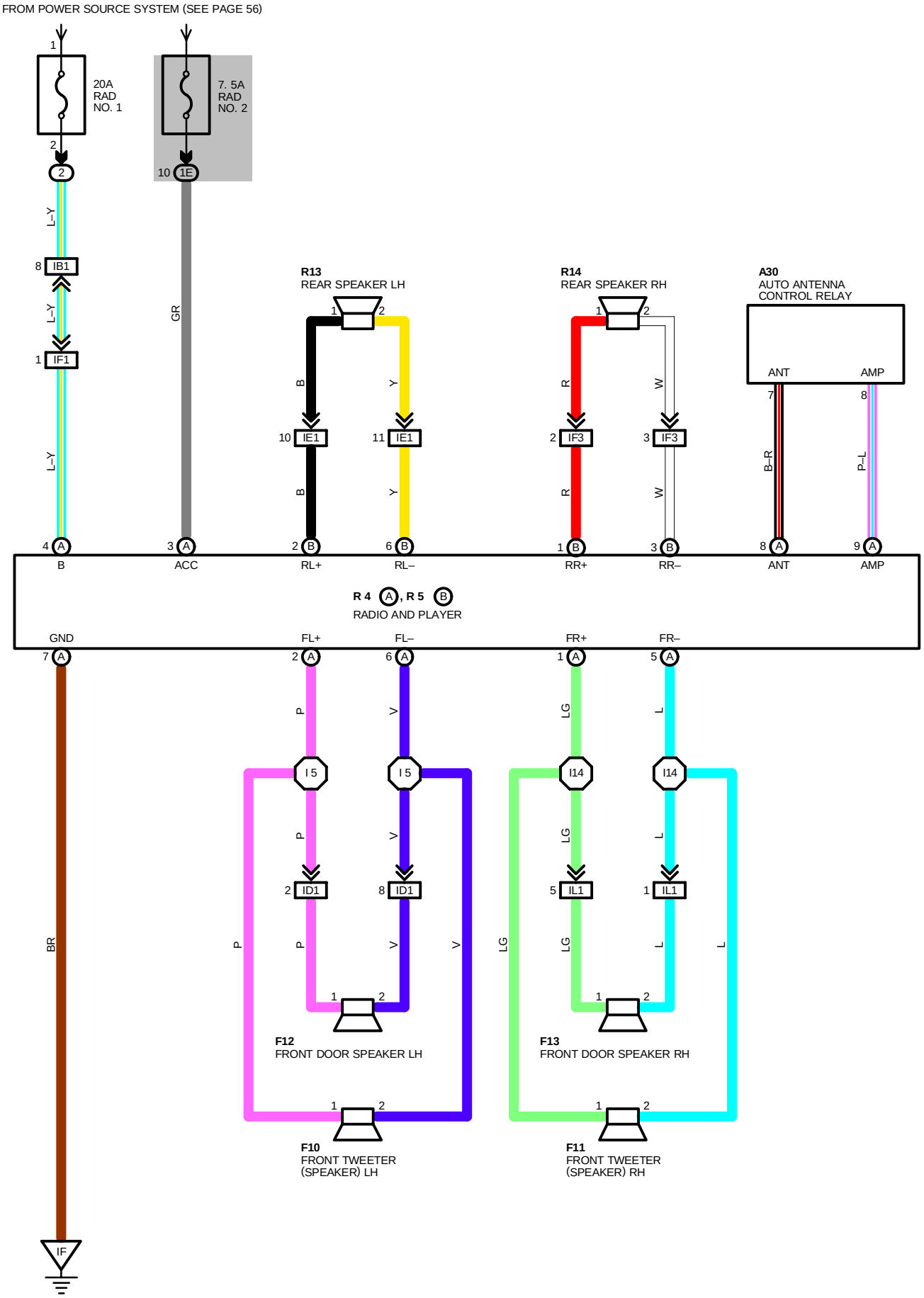

SERVICE HINTS

R 4(A) RADIO AND PLAYER
(A) 4–GROUND : ALWAYS APPROX. **12** VOLTS
(A) 3–GROUND : APPROX. **12** VOLTS WITH IGNITION SW AT **ON** OR **ACC** POSITION
(A) 7–GROUND : ALWAYS CONTINUOUS

: PARTS LOCATION

CODE	SEE PAGE	CODE	SEE PAGE	CODE	SEE PAGE
A30	28	**F12**	30	**R 5** B	29
F10	29	**F13**	30	**R13**	30
F11	29	**R 4** A	29	**R14**	30

: RELAY BLOCKS

CODE	SEE PAGE	RELAY BLOCKS (RELAY BLOCK LOCATION)
2	22	R/B NO. 2 (ENGINE COMPARTMENT LEFT)

: JUNCTION BLOCK AND WIRE HARNESS CONNECTOR

CODE	SEE PAGE	JUNCTION BLOCK AND WIRE HARNESS (CONNECTOR LOCATION)
1E	20	INSTRUMENT PANEL WIRE AND J/B NO. 1 (LEFT KICK PANEL)

: CONNECTOR JOINING WIRE HARNESS AND WIRE HARNESS

CODE	SEE PAGE	JOINING WIRE HARNESS AND WIRE HARNESS (CONNECTOR LOCATION)
IB1	36	ENGINE ROOM MAIN WIRE AND COWL WIRE (LEFT KICK PANEL)
ID1	36	FRONT DOOR LH WIRE AND INSTRUMENT PANEL WIRE (LEFT KICK PANEL)
IE1	36	INSTRUMENT PANEL WIRE AND FLOOR NO. 2 WIRE (LEFT KICK PANEL)
IF1	36	INSTRUMENT PANEL WIRE AND COWL WIRE (INSTRUMENT PANEL REINFORCEMENT LH)
IF3	36	INSTRUMENT PANEL WIRE AND COWL WIRE (RIGHT KICK PANEL)
IL1	38	FRONT DOOR RH WIRE AND INSTRUMENT PANEL WIRE (RIGHT KICK PANEL)

: GROUND POINTS

CODE	SEE PAGE	GROUND POINTS LOCATION
IF	36	LEFT KICK PANEL

: SPLICE POINTS

CODE	SEE PAGE	WIRE HARNESS WITH SPLICE POINTS	CODE	SEE PAGE	WIRE HARNESS WITH SPLICE POINTS
I 5	38	INSTRUMENT PANEL WIRE	**I14**	38	INSTRUMENT PANEL WIRE

A30 GRAY



F10



F11



F12



F13



R 4 (A)

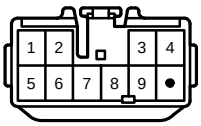

R 5 (B)

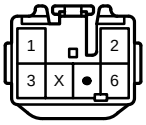

R13



R14



COMBINATION METER

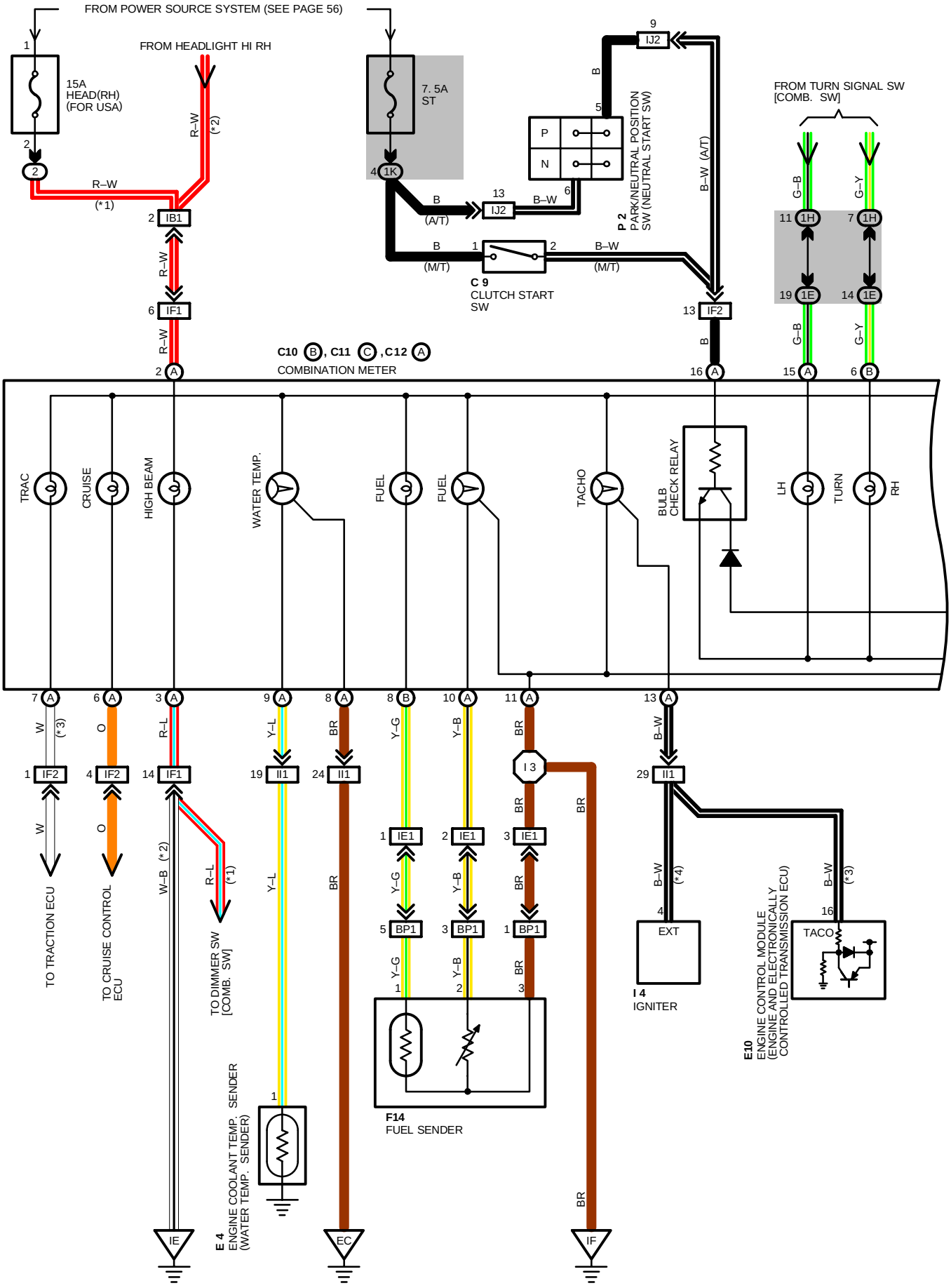

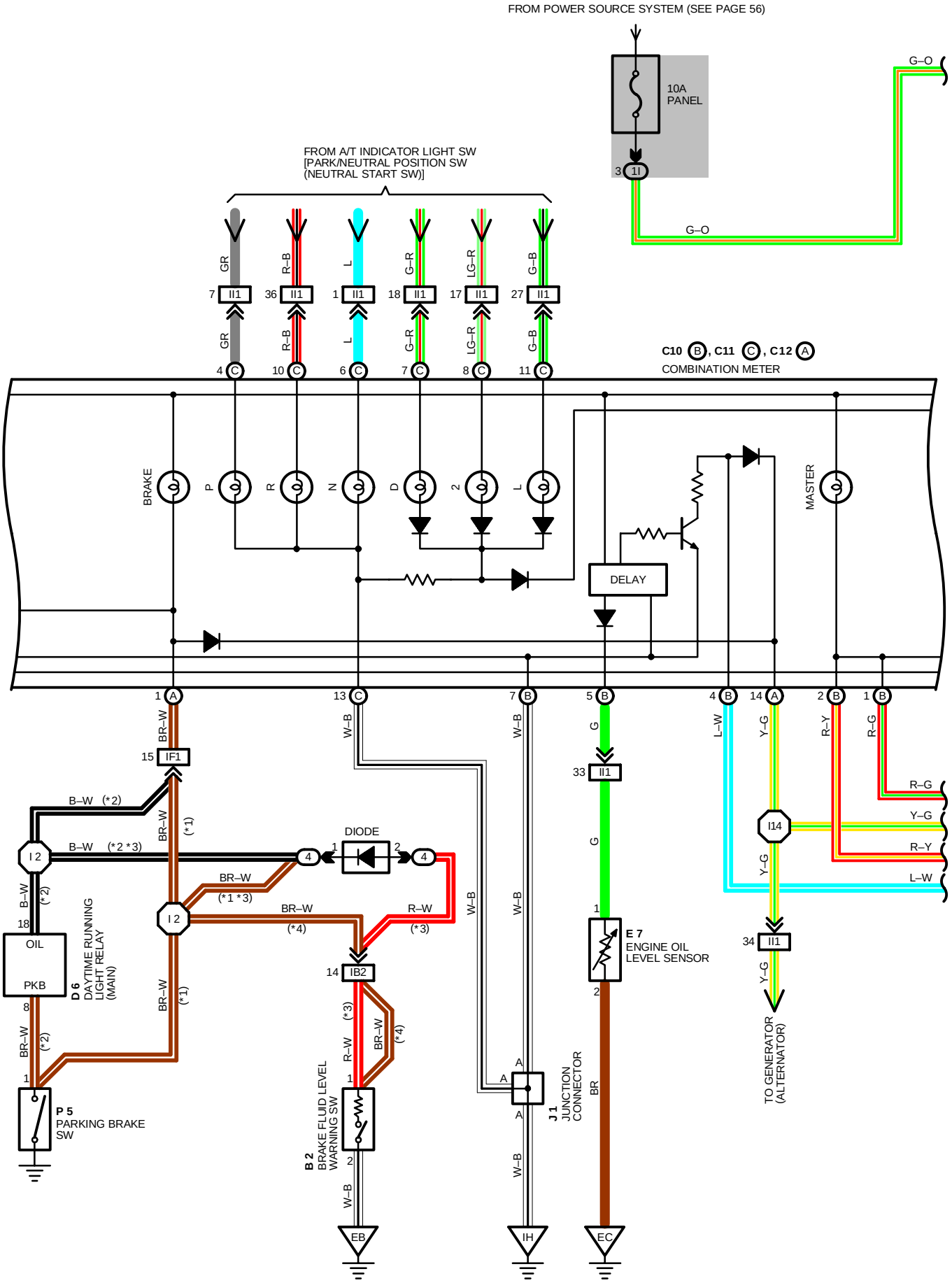
FROM POWER SOURCE SYSTEM (SEE PAGE 56)
10A PANEL
G–O
FROM A/T INDICATOR LIGHT SW [PARK/NEUTRAL POSITION SW (NEUTRAL START SW)]
C10 B, C11 C, C12 A
COMBINATION METER
BRAKE
P
R
N
D
2
L
MASTER
DELAY
DIODE
OIL
PKB
D 6 DAYTIME RUNNING LIGHT RELAY (MAIN)
P 5 PARKING BRAKE SW
B 2 BRAKE FLUID LEVEL WARNING SW
E 7 ENGINE OIL LEVEL SENSOR
J 1 JUNCTION CONNECTOR
TO GENERATOR (ALTERNATOR)
IF1
I 2
IB2
I14
II1
EB
IH
EC

COMBINATION METER

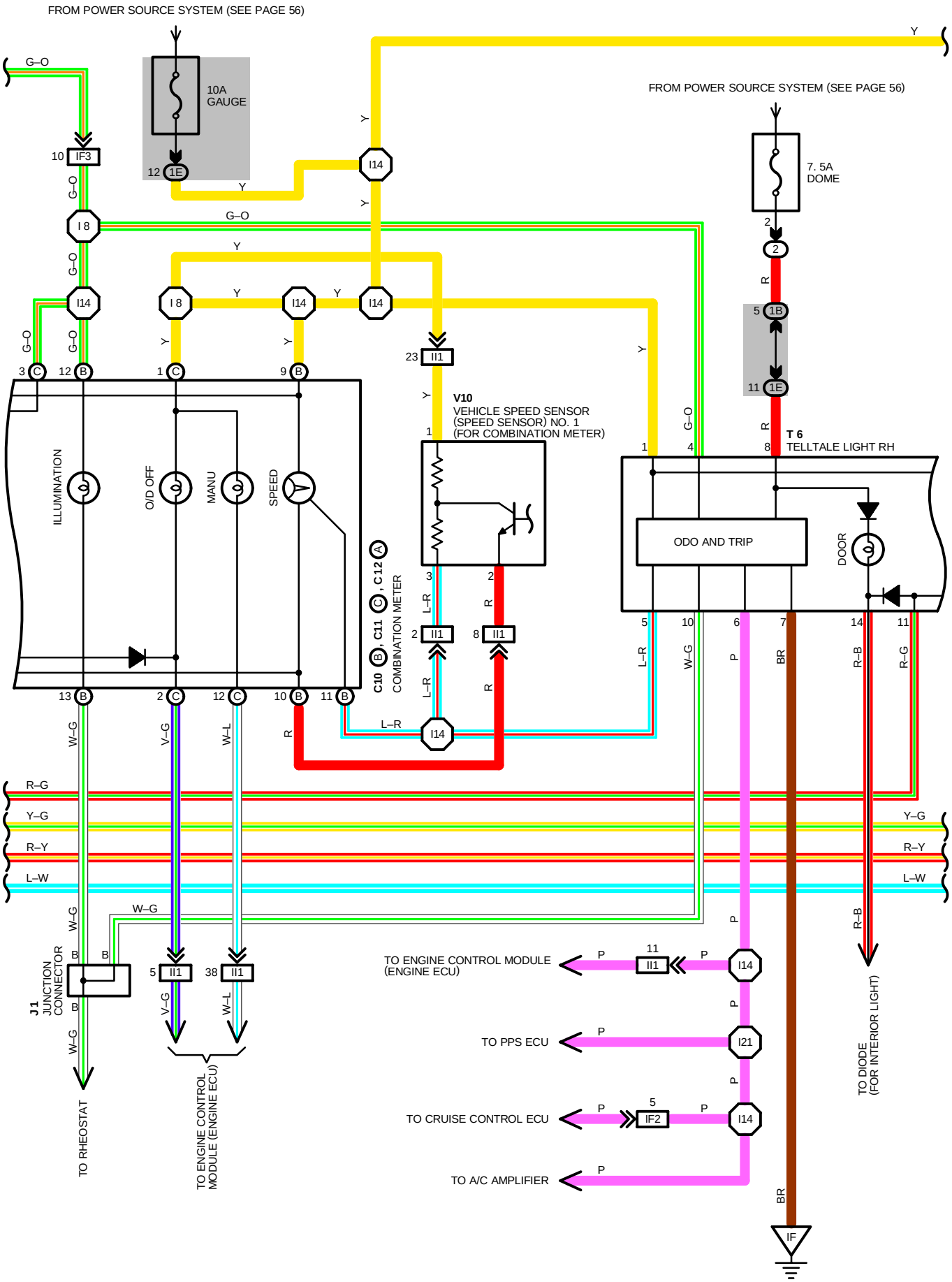

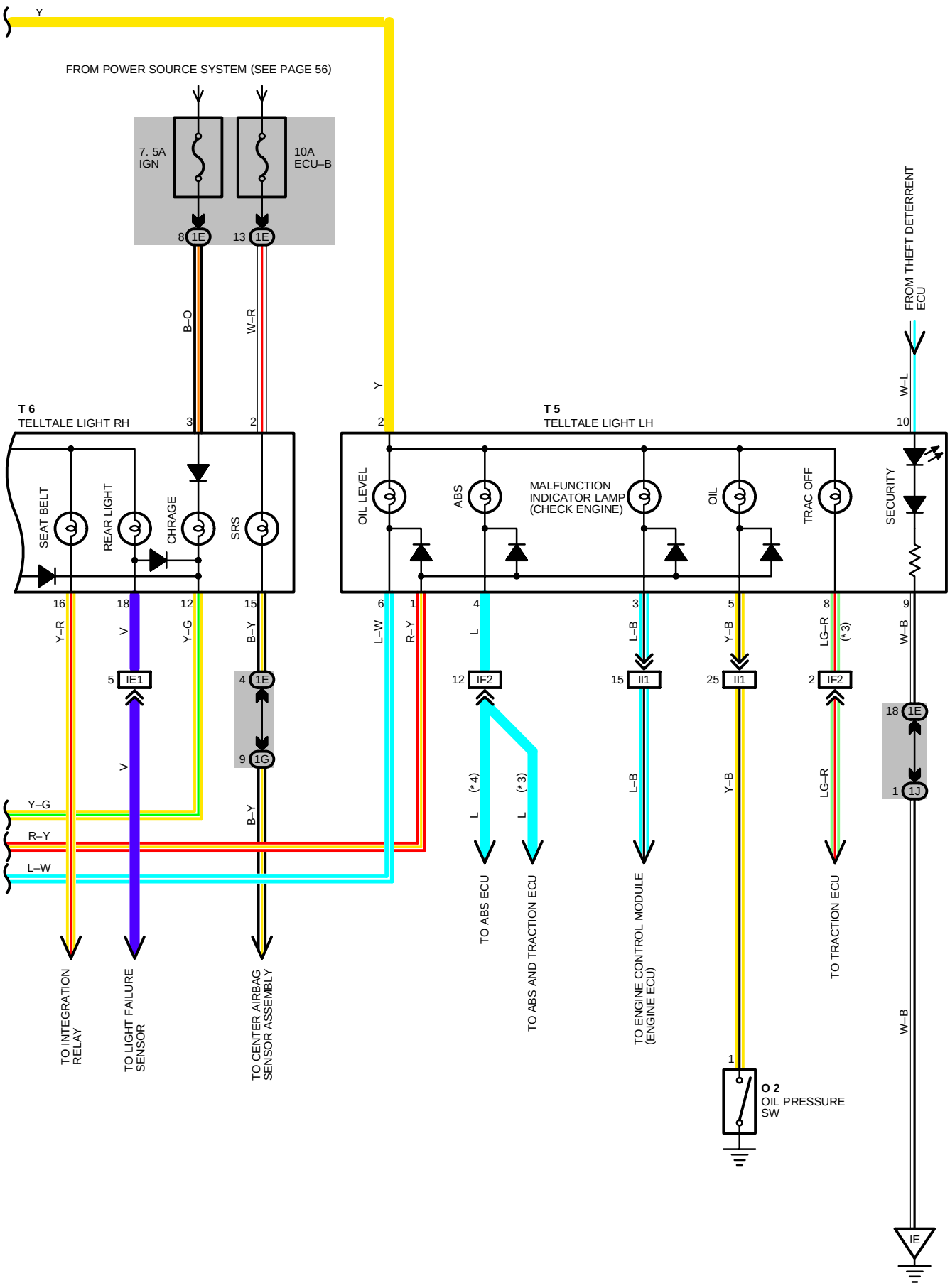
Y
FROM POWER SOURCE SYSTEM (SEE PAGE 56)
7. 5A IGN
10A ECU–B
8 1E
13 1E
B–O
W–R
T 6
TELLTALE LIGHT RH
3
2
SEAT BELT
REAR LIGHT
CHRAGE
SRS
16
18
12
15
Y–R
V
Y–G
B–Y
5 IE1
4 1E
9 1G
V
B–Y
Y–G
R–Y
L–W
TO INTEGRATION RELAY
TO LIGHT FAILURE SENSOR
TO CENTER AIRBAG SENSOR ASSEMBLY
Y
2
T 5
TELLTALE LIGHT LH
OIL LEVEL
ABS
MALFUNCTION INDICATOR LAMP (CHECK ENGINE)
OIL
TRAC OFF
SECURITY
6
1
4
3
5
8
9
L–W
R–Y
L
L–B
Y–B
LG–R
(*3)
W–B
12 IF2
15 II1
25 II1
2 IF2
L (*4)
L (*3)
L–B
Y–B
LG–R
TO ABS ECU
TO ABS AND TRACTION ECU
TO ENGINE CONTROL MODULE (ENGINE ECU)
TO TRACTION ECU
FROM THEFT DETERRENT ECU
W–L
10
18 1E
1 1J
W–B
1
O 2
OIL PRESSURE SW
IE

COMBINATION METER

SERVICE HINTS

B 2 BRAKE FLUID LEVEL WARNING SW
1–2 : CLOSED WITH FLOAT DOWN

P 5 PARKING BRAKE SW
1–GROUND : CLOSED WITH PARKING BRAKE LEVER PULLED UP

O 2 OIL PRESSURE SW
1–GROUND : CLOSED WITH OIL PRESSURE ABOVE APPROX. **20** KPA (**2.8** PSI, **0.2** KG/CM^2)

E 4 ENGINE COOLANT TEMP. SENDER (WATER TEMP. SENDER)
1–GROUND : APPROX. **160**–**240** (**50**˚C, **122**˚F)
: APPROX. **17.1**–**20.4** (**120**˚C, **288**˚F)

E 7 ENGINE OIL LEVEL SENSOR
1–2 : CLOSED WITH FLOAT UP AND ENGINE OIL TEMP. AT BELOW APPROX. **55**˚C (**131**˚F)
OPEN WITH FLOAT DOWN AND ENGINE OIL TEMP. AT BELOW APPROX. **60**˚C (**140**˚F)

F14 FUEL SENDER
1–2 : APPROX. **3** AT FUEL FULL
: APPROX. **110** AT FUEL EMPTY

C10(B), C12(A) COMBINATION METER
(B) 9–GROUND : APPROX. **12** VOLTS WITH IGNITION SW AT **ON** POSITION
(A)16–GROUND : APPROX. **12** VOLTS WITH IGNITION SW AT **ST** POSITION AND SHIFT LEVER AT **P** OR **N** POSITION (A/T)
12 VOLTS WITH IGNITION SW AT **ST** POSITION AND CLUTCH PEDAL DEPRESSED (M/T)
(A) 8–GROUND : ALWAYS CONTINUOUS
(A)11–GROUND : ALWAYS CONTINUOUS
(A) 2–GROUND : ALWAYS APPROX. **12** VOLTS

○ : PARTS LOCATION

CODE		SEE PAGE	CODE	SEE PAGE	CODE	SEE PAGE
B 2		24 (2JZ–GTE)	**E 4**	26 (2JZ–GE)	**O 2**	27 (2JZ–GE)
		26 (2JZ–GE)	**E 7**	24 (2JZ–GTE)	**P 2**	25 (2JZ–GTE)
C 9		28		26 (2JZ–GE)		27 (2JZ–GE)
C10	B	28	**E10**	29	**P 5**	29
C11	C	28	**F14**	30	**T 5**	29
C12	A	28	**I 4**	27	**T 6**	29
D 6		28	**J 1**	29	**V10**	25 (2JZ–GTE)
E 4		24 (2JZ–GTE)	**O 2**	25 (2JZ–GTE)		27 (2JZ–GE)

▭ : RELAY BLOCKS

CODE	SEE PAGE	RELAY BLOCKS (RELAY BLOCK LOCATION)
2	22	R/B NO. 2 (ENGINE COMPARTMENT LEFT)
4	23	R/B NO. 4 (LEFT KICK PANEL)

▭ : JUNCTION BLOCK AND WIRE HARNESS CONNECTOR

CODE	SEE PAGE	JUNCTION BLOCK AND WIRE HARNESS (CONNECTOR LOCATION)
1B	20	ENGINE ROOM MAIN WIRE AND J/B NO. 1 (LEFT KICK PANEL)
1E	20	INSTRUMENT PANEL WIRE AND J/B NO. 1 (LEFT KICK PANEL)
1G	20	COWL WIRE AND J/B NO. 1 (LEFT KICK PANEL)
1H		
1I		
1J		
1K		

▭ : CONNECTOR JOINING WIRE HARNESS AND WIRE HARNESS

CODE	SEE PAGE	JOINING WIRE HARNESS AND WIRE HARNESS (CONNECTOR LOCATION)
IB1	36	ENGINE ROOM MAIN WIRE AND COWL WIRE (LEFT KICK PANEL)
IB2		
IE1	36	INSTRUMENT PANEL WIRE AND FLOOR NO. 2 WIRE (LEFT KICK PANEL)
IF1	36	INSTRUMENT PANEL WIRE AND COWL WIRE (INSTRUMENT PANEL REINFORCEMENT LH)
IF2		
IF3	36	INSTRUMENT PANEL WIRE AND COWL WIRE (RIGHT KICK PANEL)
II1	38	ENGINE WIRE AND INSTRUMENT PANEL WIRE (RIGHT KICK PANEL)
IJ2	38	ENGINE WIRE AND COWL WIRE (RIGHT KICK PANEL)
BP1	40	FUEL GAUGE WIRE AND FLOOR NO. 2 WIRE (LUGGAGE ROOM FRONT LH)

: GROUND POINTS

CODE	SEE PAGE	GROUND POINTS LOCATION
EB	32 (2JZ–GTE)	FRONT SIDE OF LEFT FENDER
	34 (2JZ–GE)	
EC	32 (2JZ–GTE)	FRONT SIDE OF INTAKE MANIFOLD
	34 (2JZ–GE)	
IE	36	LEFT KICK PANEL
IF		
IH	36	RIGHT KICK PANEL

: SPLICE POINTS

CODE	SEE PAGE	WIRE HARNESS WITH SPLICE POINTS	CODE	SEE PAGE	WIRE HARNESS WITH SPLICE POINTS
I 2	38	COWL WIRE	**I14**	38	INSTRUMENT PANEL WIRE
I 3	38	INSTRUMENT PANEL WIRE	**I21**		
I 8					

B 2 GRAY



C 9

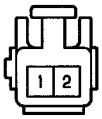

C10 (B) BLUE

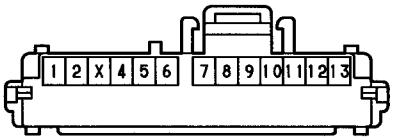

C11 (C) BROWN

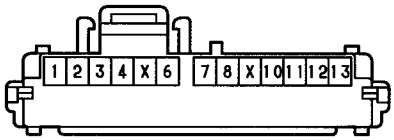

(2JZ-GTE) C12 (A)

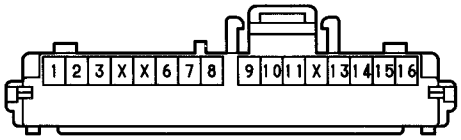

(2JZ-GE) C12 (A)

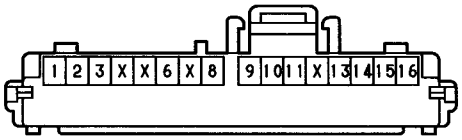

D 6 GRAY

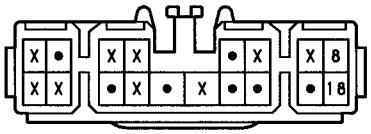

E 4 GRAY



E 7 GRAY



E10 DARK GRAY

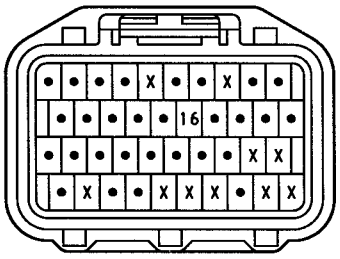

F14 DARK GRAY



I 4 BLACK

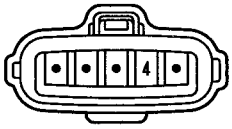

J 1

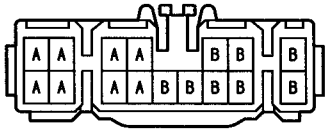

(HINT:SEE PAGE 7)

O 2 BLACK



P 2 GRAY

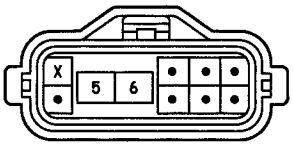

P 5



(2JZ-GTE) T 5

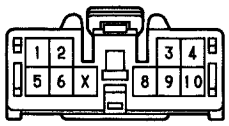

(2JZ-GE) T 5

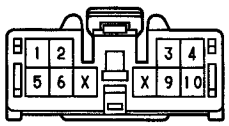

T 6

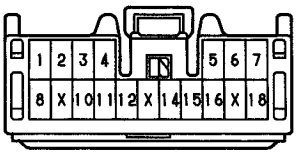

V10 BLACK



SYSTEM OUTLINE

1. HEATER BLOWER OPERATION

MANNAL BLOWER OPERATION

WHEN THE BLOWER CONTROL SW IS SET TO ANY BLOWER SPEEDS, THE A/C AMPLIFIER OPERATES AND THE CURRENT TO DRIVE THE BLOWER MOTOR FLOWS FROM **TERMINAL BLW** OF THE A/C AMPLIFIER TO **TERMINAL SI** OF THE BLOWER MOTOR CONTROL RELAY. THE CURRENT ACTIVATES THE RELAY AND THE VOLTAGE APPLIED TO **TERMINAL +B** OF THE BLOWER MOTOR CONTROL RELAY IS OUTPUT AT **TERMINAL M+** AS THE VOLTAGE FOR THE SELECTED BLOWER SPEED. THE CURRENT THEN FLOWS FROM **TERMINAL M+** OF THE BLOWER MOTOR CONTROL RELAY TO **TERMINAL 2** → **TERMINAL 1** → **TERMINAL M–** OF BLOWER MOTOR CONTROL RELAY → **TERMINAL GND** → **GROUND**, AND THE BLOWER MOTOR OPERATES AT THE BLOWER SPEED SELECTED.

AUTO FUNCTION

WHEN THE AUTO SW IS TURNED ON, THE A/C AMPLIFIER CALCULATES THE REQUIRED VENT TEMPERATURE BASED ON THE SET TEMPERATURE AND INPUT FROM EACH SENSOR. THEN **TERMINAL BLW** OF THE A/C AMPLIFIER INPUTS CURRENT TO **TERMINAL SI** OF THE BLOWER MOTOR CONTROL RELAY IN CONFORMITY WITH THE REQUIRED VENT OUTPUT. THIS CURRENT ACTIVATES THE BLOWER MOTOR CONTROL RELAY SO THAT CURRENT FLOWS FROM **TERMINAL M+** OF THE BLOWER MOTOR CONTROL RELAY → **TERMINAL 2** OF BLOWER MOTOR → **TERMINAL 1** → **TERMINAL M–** OF BLOWER MOTOR CONTROL RELAY → **TERMINAL GND** → **GROUND**, ACTIVATING THE BLOWER MOTOR. THE BLOWER MOTOR THEN OPERATES AT DIFFERENT STEPS IN CONFORMITY WITH VARIABLE CURRENT FLOW OUTPUT FROM **TERMINAL BLW** OF THE A/C AMPLIFIER TO **TERMINAL SI** OF THE BLOWER MOTOR CONTROL RELAY.

2. OPERATION OF AIR INLET CONTROL SERVO MOTOR

(SWITCHING FROM FRESH TO RECIRC)

WITH IGNITION SW TURNED ON, THE CURRENT FLOWS FROM **HTR** FUSE TO **TERMINAL 2** OF AIR INLET CONTROL SERVO MOTOR → **TERMINAL 5** → **TERMINAL AIR** OF A/C AMPLIFIER → **TERMINAL GND** → **GROUND**, THE MOTOR ROTATES AND THE DAMPER STOPS AT **RECIRC** POSITION.

(SWITCH(NG FROM RECIRC TO FRESH)

WITH IGNITION SW TURNED ON, THE CURRENT FLOWS FROM **HTR** FUSE TO **TERMINAL 2** OF AIR INLET CONTROL SERVO MOTOR → **TERMINAL 3** → **TERMINAL AIF** OF A/C AMPLIFIER → **TERMINAL GND** → **GROUND**, THE MOTOR ROTATES AND THE DAMPER STOPS AT **FRESH** POSITION.

3. OPERATION OF AIR VENT MODE CONTROL SERVO MOTOR

WITH IGNITION SW TURNED ON, THE CURRENT FLOWS FROM **HTR** FUSE TO **TERMINAL IG** OF A/C AMPLIFIER

(SWITCHING FROM DEF TO FACE)

THE CURRENT FROM **TERMINAL AOF** OF A/C AMPLIFIER → **TERMINAL 1** OF AIR VENT MODE CONTROL SERVO MOTOR → **TERMINAL 2** → **TERMINAL AOD** OF A/C AMPLIFIER → **TERMINAL GND** → **GROUND**. THE MOTOR ROTATES AND THE DAMPER MOVES TO FACE SIDE. WHEN THE DAMPER OPERATES WITH THE A/C SW AT **FACE** POSITION, THE DAMPER POSITION SIGNAL IS INPUT FROM **TERMINAL 3** OF THE SERVO MOTOR TO THE **TERMINAL TPO** OF THE A/C AMPLIFIER. AS A RESULT, CURRENT TO THE SERVO MOTOR CIRCUIT IS CUT OFF BY THE AMPLIFIER, SO THE DAMPER STOPS AT THAT POSITION.

(SWITCHING FROM FACE TO DEF)

THE CURRENT FLOWS FROM **TERMINAL AOD** OF A/C AMPLIFIER → **TERMINAL 2** OF AIR VENT MODE CONTROL SERVO MOTOR → **TERMINAL 1** → **TERMINAL AOF** OF A/C AMPLIFIER → **TERMINAL GND** → **GROUND**, THE MOTOR ROTATES AND THE DAMPER STOPS AT THAT POSITION.

4. OPERATION OF AIR MIX CONTROL SERVO MOTOR

WHEN THE TEMPERATURE SW IS TURNED TO THE “COOL” SIDE, THE CURRENT FLOWS FROM **TERMINAL AMC** OF A/C AMPLIFIER → **TERMINAL 1** OF AIR MIX CONTROL SERVO MOTOR → MOTOR → **TERMINAL 2** → **TERMINAL AMH** OF A/C AMPLIFIER → **TERMINAL GND** → **GROUND** AND THE MOTOR ROTATES. THE DAMPER OPENING ANGLE AT THIS TIME IS INPUT FROM **TERMINAL 3** OF SERVO MOTOR TO **TERMINAL TP** OF A/C CONTROL ASSEMBLY, THIS IS USED TO DETERMINE THE DAMPER STOP POSITION AND MAINTAIN THE SET TEMPERATURE.

WHEN THE TEMPERATURE CONTROL SW IS TURNED TO THE “WARM” SIDE, THE CURRENT FLOWS FROM **TERMINAL AMH** OF A/C AMPLIFIER → **TERMINAL 2** OF AIR MIX CONTROL SERVO MOTOR → MOTOR → **TERMINAL 1** → **TERMINAL AM1** OF A/C AMPLIFIER, ROTATING THE MOTOR IN REVERSE AND SWITCHING THE DAMPER FROM COOL TO WARM SIDE.

5. AIR CONDITIONING OPERATION

THE A/C AMPLIFIER RECEIVES VARIOUS SIGNALS, I.E., THE ENGINE RPM FROM THE IGNITER, OUTLET TEMPERATURE SIGNAL FROM THE A/C THERMISTOR, COOLANT TEMPERATURE FROM THE ENGINE COOLANT TEMP. SENSOR (EFI WATER TEMP. SENSOR) AND THE LOCK SIGNAL FROM THE A/C COMPRESSOR, ETC.

WHEN THE ENGINE IS STARTED AND THE A/C SW (HEATER CONTROL SW) IS ON, A SIGNAL IS INPUT TO THE A/C AMPLIFIER. AS A RESULT, THE GROUND CIRCUIT IN A/C AMPLIFIER IS CLOSED AND CURRENT FLOWS FROM **HTR** FUSE TO **TERMINAL 1** OF A/C MAGNETIC CLUTCH RELAY → **TERMINAL 2** → **TERMINAL ACMG** OF ENGINE CONTROL MODULE (ENGINE ECU) → **TERMINAL A/C** → **TERMINAL MGC** OF A/C AMPLIFIER → **TERMINAL GND** → **GROUND**, TURNING THE RELAY ON, SO THAT THE A/C MAGNETIC CLUTCH IS ON AND THE A/C AMPLIFIER OPERATES.

AT THE SAME TIME, THE ENGINE CONTROL MODULE (ENGINE ECU) DETECTS THE MAGNETIC CLUTCH IS ON AND THE A/C AMPLIFIER IS OPERATING AND OPENS DIRECTION TO AVOID LOWERING THE ENGINE RPM DURING A/C OPERATING.

WHEN ANY OF THE FOLLOWING SIGNALS ARE INPUT TO THE A/C AMPLIFIER, THE A/C AMPLIFIER OPERATES TO TURN OFF THE AIR CONDITIONING.

* ENGINE RPM SIGNAL IS HIGH.
* COOLANT TEMP. SIGNAL IS HIGH.
* A SIGNAL THAT THE TEMPERATURE AT THE AIR OUTLET IS LOW.
* A SIGNAL THAT THERE IS A LARGE DIFFERENCE BETWEEN ENGINE SPEED AND COMPRESSOR SPEED.
* A SIGNAL THAT THE REFRIGERANT PRESSURE IS ABNORMALLY HIGH OR LOW.

RADIATOR FAN AND AUTOMATIC AIR CONDITIONING

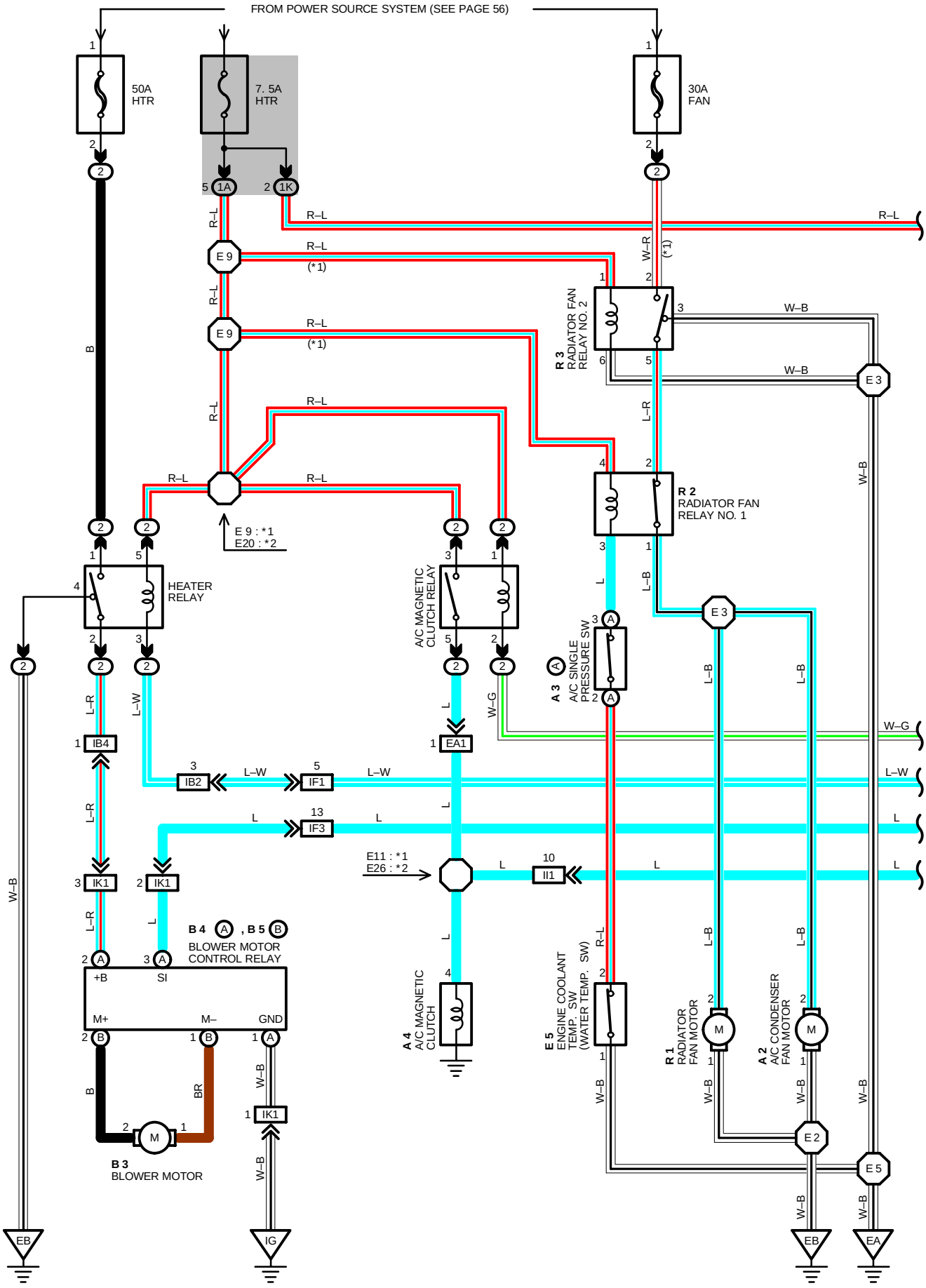

*1 : 2JZ–GTE
*2 : 2JZ–GE

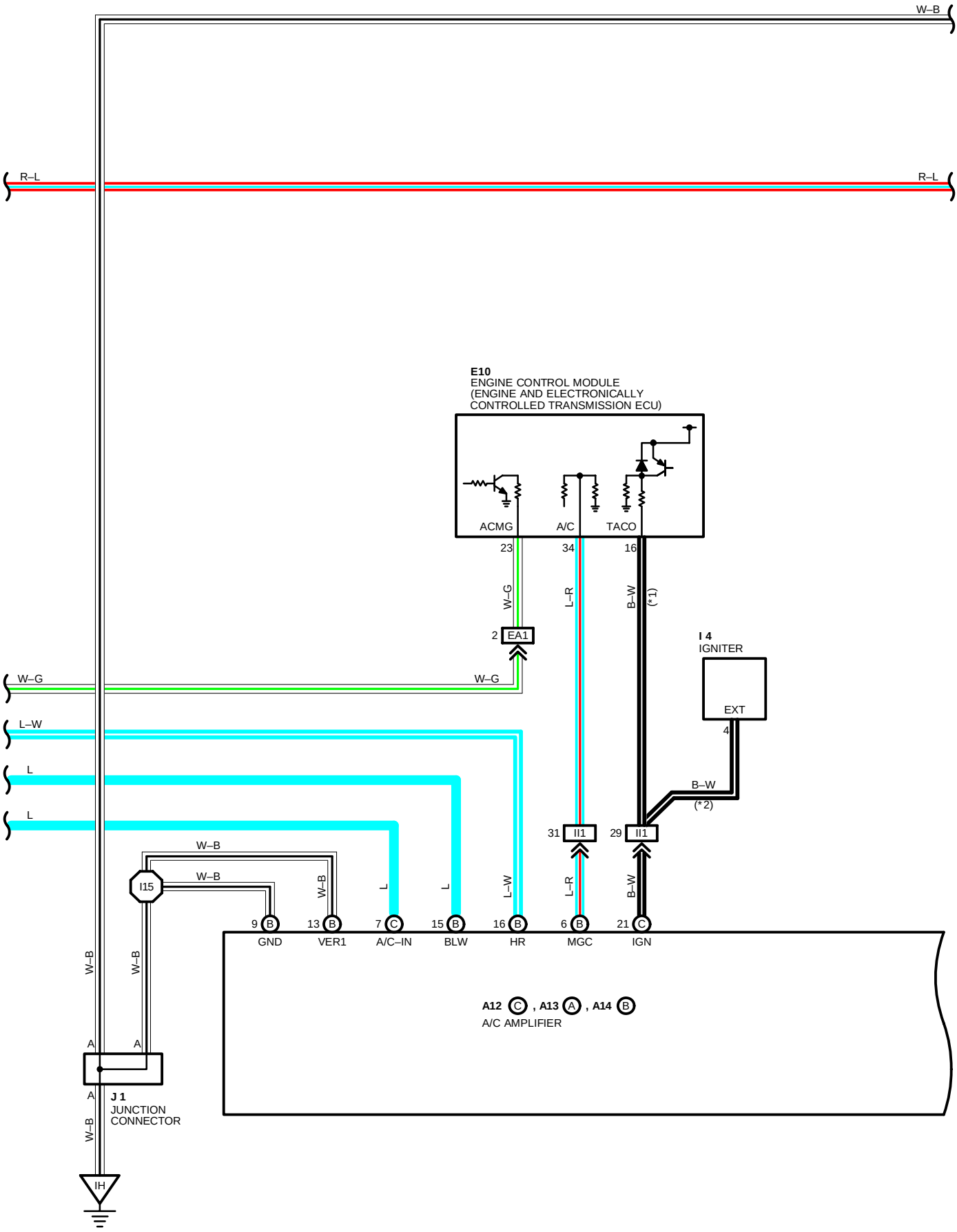

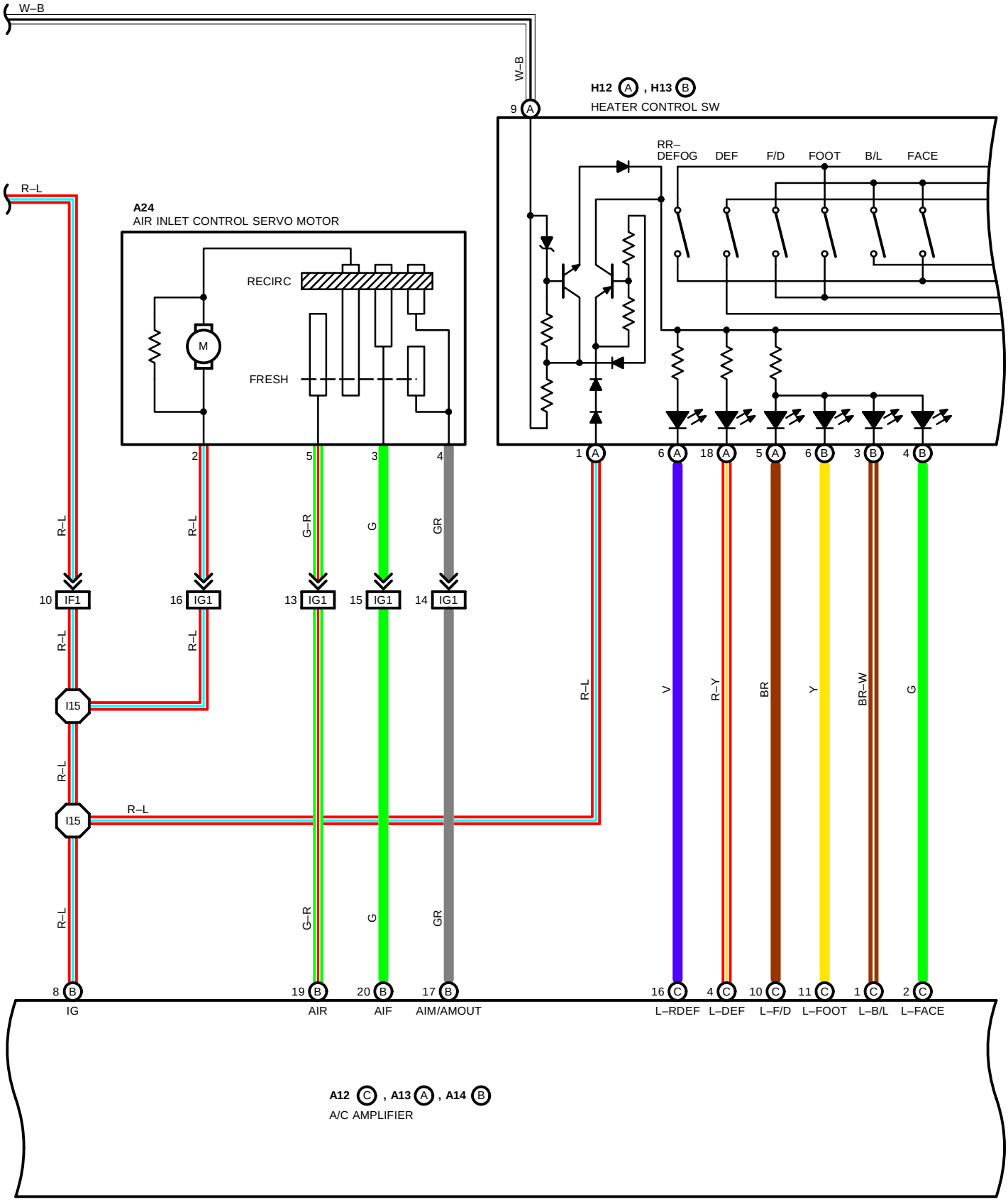
W–B
W–B
9 A
H12 A , H13 B
HEATER CONTROL SW
RR–DEFOG
DEF
F/D
FOOT
B/L
FACE
R–L
A24
AIR INLET CONTROL SERVO MOTOR
RECIRC
FRESH
M
2
5
3
4
1 A
6 A
18 A
5 A
6 B
3 B
4 B
R–L
R–L
G–R
G
GR
10 IF1
16 IG1
13 IG1
15 IG1
14 IG1
R–L
R–L
I15
R–L
I15
R–L
R–L
V
R–Y
BR
Y
BR–W
G
G–R
G
GR
8 B
19 B
20 B
17 B
16 C
4 C
10 C
11 C
1 C
2 C
IG
AIR
AIF
AIM/AMOUT
L–RDEF
L–DEF
L–F/D
L–FOOT
L–B/L
L–FACE
A12 C , A13 A , A14 B
A/C AMPLIFIER

*1 : 2JZ–GTE
*2 : 2JZ–GE

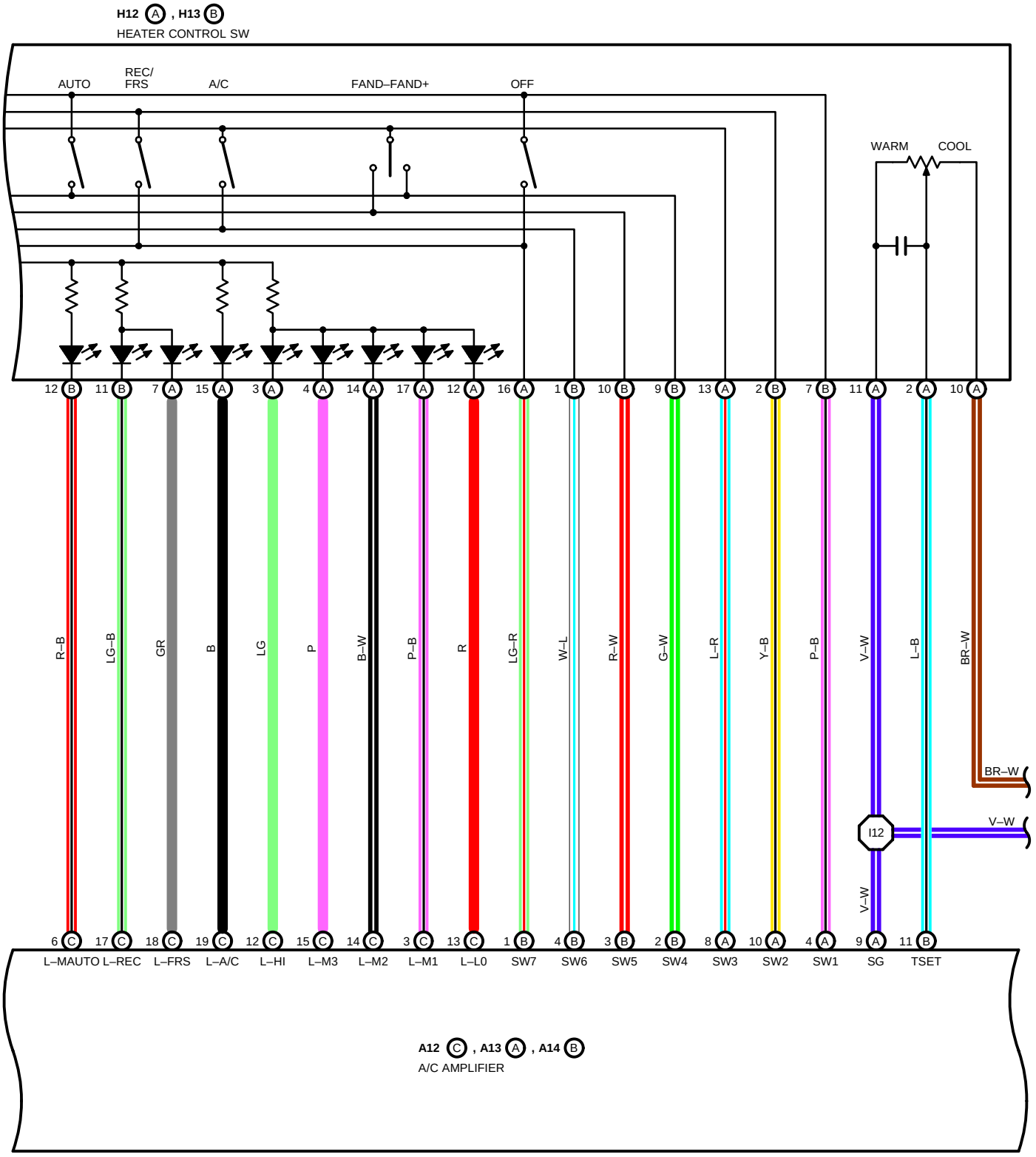

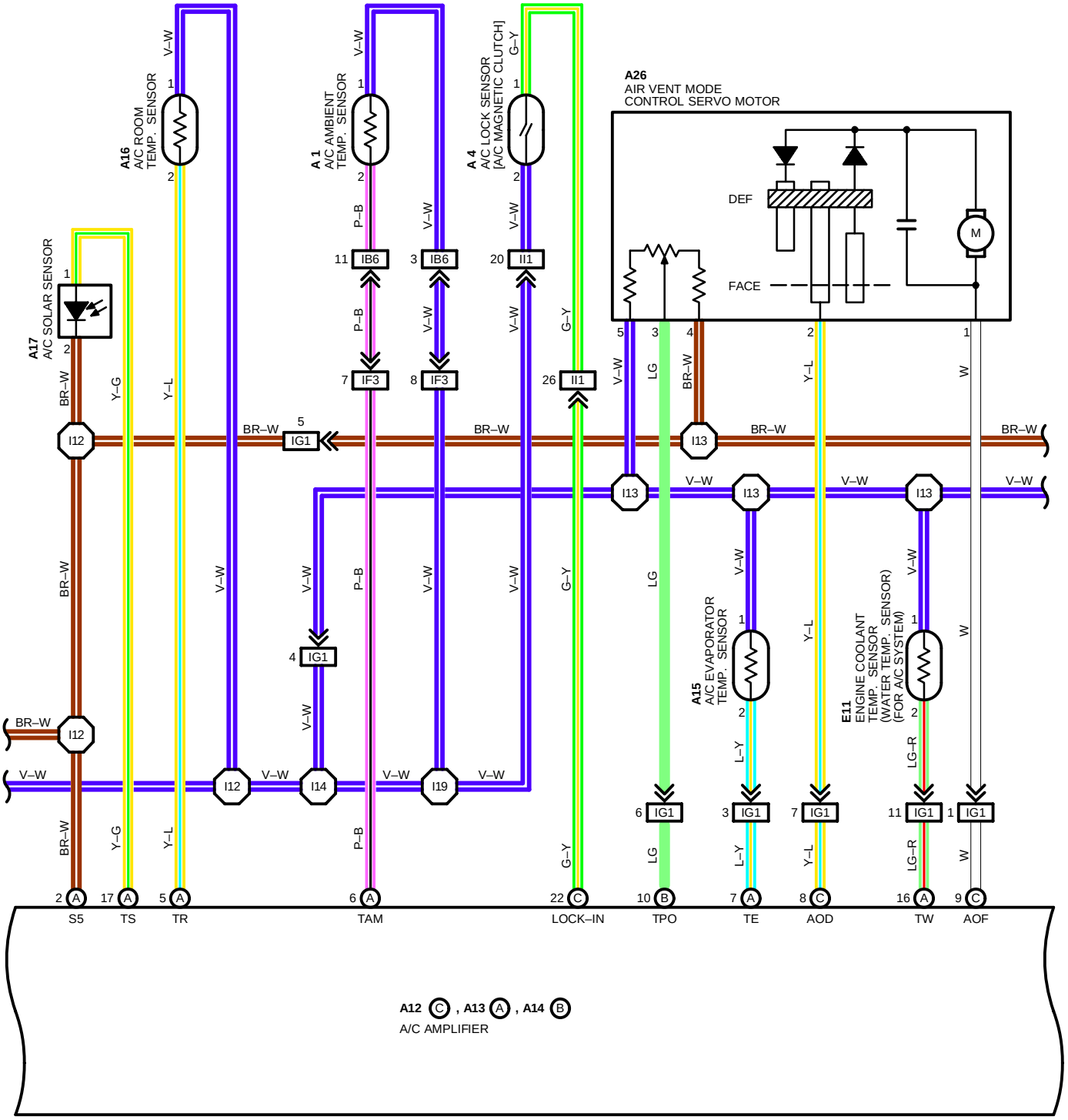
A16
A/C ROOM TEMP. SENSOR
A 1
A/C AMBIENT TEMP. SENSOR
A 4
A/C LOCK SENSOR [A/C MAGNETIC CLUTCH]
A26
AIR VENT MODE CONTROL SERVO MOTOR
DEF
FACE
M
A17
A/C SOLAR SENSOR
A15
A/C EVAPORATOR TEMP. SENSOR
E11
ENGINE COOLANT TEMP. SENSOR (WATER TEMP. SENSOR) (FOR A/C SYSTEM)
I12
I13
IG1
IB6
IF3
II1
I14
I19
V–W
BR–W
Y–G
Y–L
P–B
G–Y
LG
L–Y
LG–R
W
S5
TS
TR
TAM
LOCK–IN
TPO
TE
AOD
TW
AOF
A12 C , A13 A , A14 B
A/C AMPLIFIER

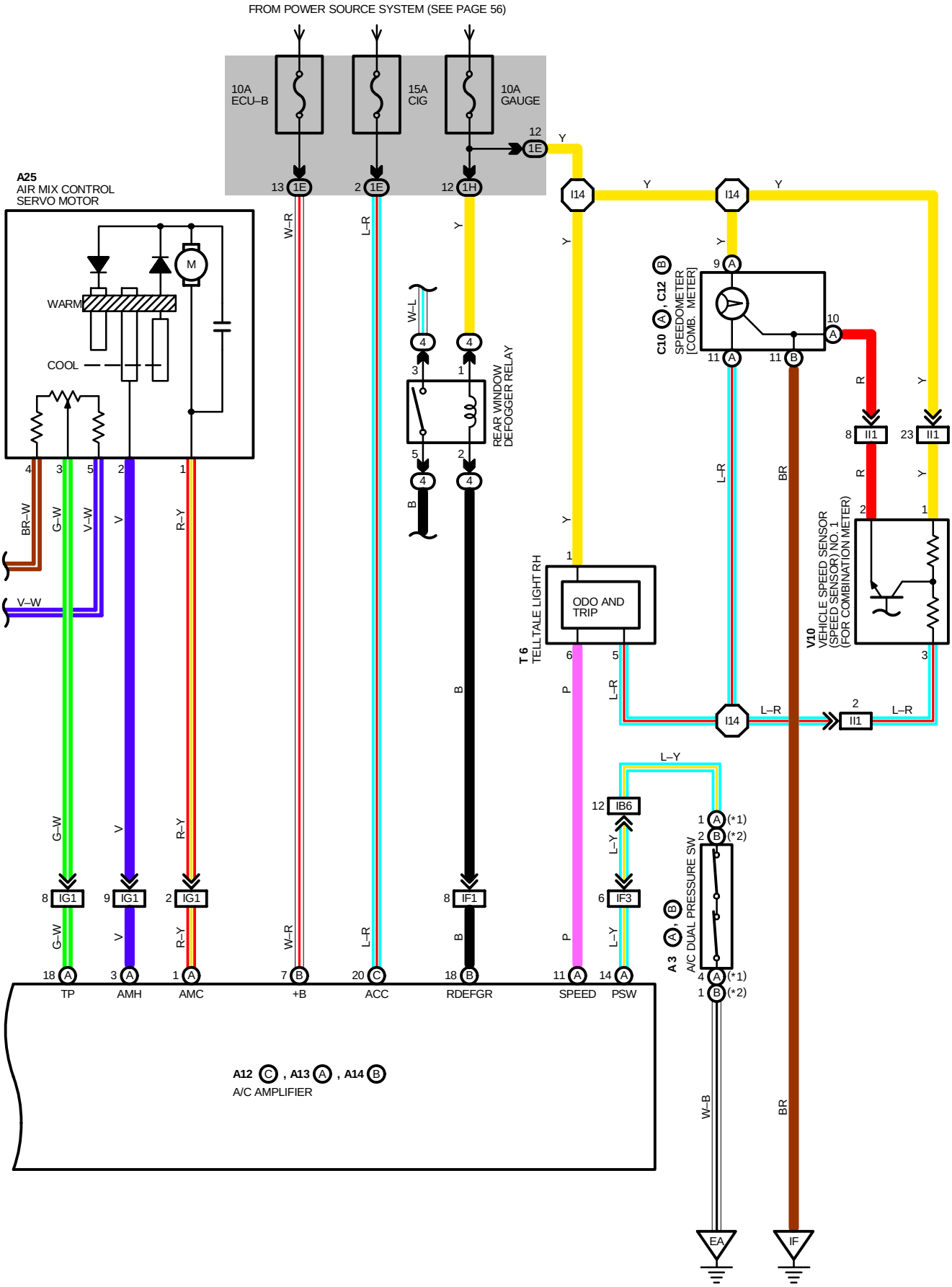
FROM POWER SOURCE SYSTEM (SEE PAGE 56)
10A ECU–B
15A CIG
10A GAUGE
A25
AIR MIX CONTROL SERVO MOTOR
WARM
COOL
M
REAR WINDOW DEFOGGER RELAY
C10 , C12
SPEEDOMETER [COMB. METER]
T6
TELLTALE LIGHT RH
ODO AND TRIP
V10
VEHICLE SPEED SENSOR (SPEED SENSOR) NO. 1 (FOR COMBINATION METER)
A3
A/C DUAL PRESSURE SW
A12 , A13 , A14
A/C AMPLIFIER
TP
AMH
AMC
+B
ACC
RDEFGR
SPEED
PSW
EA
IF

RADIATOR FAN AND AUTOMATIC AIR CONDITIONING

SERVICE HINTS

A 4 A/C MAGNETIC CLUTCH
4 – GROUND: APPROX. **3.7**

A 3(A) A/C DUAL PRESSURE SW [A/C TRIPLE PRESSURE SW] (2JZ–GTE)
(A) 1–**(A)** 4 : OPEN ABOVE APPROX. **225** KPA (**33** PSI, **2.3** KG/CM^2) OR **3140** KPA (**458** PSI, **32** KG/CM^2)

A 3(B) A/C DUAL PRESSURE SW (2JZ–GE)
(B) 1–**(B)** 2 : OPEN ABOVE APPROX. **225** KPA (**33** PSI, **2.3** KG/CM^2) OR **3140** KPA (**458** PSI, **32** KG/CM^2)

A12(C), A13(A), A14(B) A/C AMPLIFIER

+B – GROUND:	ALWAYS APPROX. **10–14** VOLTS
IG – GROUND:	APPROX. **10–14** VOLTS WITH IGNITION SW AT **ON** POSITION
HR – GROUND:	APPROX. **10–14** VOLTS WITH IGNITION SW AT **ON** POSITION AND DO NOT TURN THE BLOWER MOTOR BELOW **1** VOLTS WITH IGNITION SW AT **ON** POSITION AND TURN THE BLOWER MOTOR
ACC – GROUND:	APPROX. **10–14** VOLTS WITH IGNITION SW AT **ACC** OR **ON** POSITION
TW – GROUND:	**10–14** VOLTS AT START THE ENGINE AND MAX. COLD POSITION OF A/C TEMP. CONTROL SW BELOW **1** VOLTS AT START THE ENGINE AND MAX. WARM POSITION OF A/C TEMP. CONTROL SW
MGC – GROUND:	BELOW **1** VOLTS AT START THE ENGINE, PUSH THE A/C AUTO SW AND A/C SW **ON** POSITION **10–14** VOLTS AT START THE ENGINE, PUSH THE A/C AUTO SW AND A/C SW **OFF** POSITION
BLW – GROUND:	**1.0–3.0** VOLTS WITH THE IGNITION SW ON AND TURN THE BLOWER MOTOR
S5 – GROUND:	**4–6** VOLTS WITH THE IGNITION SW ON
SG – GROUND:	ALWAYS CONTINUOUS
AMH – AMC	**13–19** VOLTS WITH IGNITION SW OFF
AOF – GROUND:	APPROX. **12** VOLTS WITH FACE SW ON
AOD – GROUND:	APPROX. **12** VOLTS WITH DEF SW ON
GND – GROUND:	ALWAYS CONTINUOUS

: PARTS LOCATION

CODE		SEE PAGE	CODE		SEE PAGE	CODE		SEE PAGE
A 1		24 (2JZ–GTE)	**A17**		28	**H12**	A	29
		26 (2JZ–GE)	**A24**		28	**H13**	B	29
A 2		24	**A25**		28	**I 4**		27
A 3	A	24 (2JZ–GTE)	**A26**		28	**J 1**		29
	B	26 (2JZ–GE)	**B 3**		28	**R 1**		25
A 4		24 (2JZ–GTE)	**B 4**	A	28	**R 2**		25
		26 (2JZ–GE)	**B 5**	B	28	**R 3**		25
A12	C	28	**C10**	A	28	**T 6**		29
A13	A	28	**C12**	B	28	**V10**		25 (2JZ–GTE)
A14	B	28	**E 5**		24			27 (2JZ–GE)
A15		28	**E10**		29			
A16		28	**E11**		29			

: RELAY BLOCKS

CODE	SEE PAGE	RELAY BLOCKS (RELAY BLOCK LOCATION)
2	22	R/B NO. 2 (ENGINE COMPARTMENT LEFT)
4	23	R/B NO. 4 (LEFT KICK PANEL)

: JUNCTION BLOCK AND WIRE HARNESS CONNECTOR

CODE	SEE PAGE	JUNCTION BLOCK AND WIRE HARNESS (CONNECTOR LOCATION)
1A	20	ENGINE ROOM MAIN WIRE AND J/B NO. 1 (LEFT KICK PANEL)
1E	20	INSTRUMENT PANEL WIRE AND J/B NO. 1 (LEFT KICK PANEL)
1H	20	COWL WIRE AND J/B NO. 1 (LEFT KICK PANEL)
1K		

: CONNECTOR JOINING WIRE HARNESS AND WIRE HARNESS

CODE	SEE PAGE	JOINING WIRE HARNESS AND WIRE HARNESS (CONNECTOR LOCATION)
EA1	32 (2JZ–GTE) 34 (2JZ–GE)	ENGINE WIRE AND ENGINE ROOM MAIN WIRE (NEAR THE R/B NO. 2)
IB2	36	ENGINE ROOM MAIN WIRE AND COWL WIRE (LEFT KICK PANEL)
IB4	36	ENGINE ROOM MAIN WIRE AND COWL WIRE (RIGHT KICK PANEL)
IB6		
IF1	36	INSTRUMENT PANEL WIRE AND COWL WIRE (INSTRUMENT PANEL REINFORCEMENT LH)
IF3	36	INSTRUMENT PANEL WIRE AND COWL WIRE (RIGHT KICK PANEL)
IG1	38	INSTRUMENT PANEL WIRE AND COWL NO. 3 WIRE (BEHIND HEATER CONTROL SW)
II1	38	ENGINE WIRE AND INSTRUMENT PANEL WIRE (RIGHT KICK PANEL)
IK1	38	COWL NO. 4 WIRE AND COWL WIRE (RIGHT KICK PANEL)

: GROUND POINTS

CODE	SEE PAGE	GROUND POINTS LOCATION
EA	32 (2JZ–GTE)	FRONT SIDE OF RIGHT FENDER
	34 (2JZ–GE)	
EB	32 (2JZ–GTE)	FRONT SIDE OF LEFT FENDER
	34 (2JZ–GE)	
IF	36	LEFT KICK PANEL
IG	36	RIGHT KICK PANEL
IH		

: SPLICE POINTS

CODE	SEE PAGE	WIRE HARNESS WITH SPLICE POINTS	CODE	SEE PAGE	WIRE HARNESS WITH SPLICE POINTS
E 2	32	ENGINE ROOM MAIN WIRE	**E26**	34	ENGINE WIRE
E 3			**I12**	38	INSTRUMENT PANEL WIRE
E 5			**I13**	38	COWL NO. 3 WIRE
E 9			**I14**	38	INSTRUMENT PANEL WIRE
E11	32	ENGINE WIRE	**I15**		
E20	34	ENGINE ROOM MAIN WIRE	**I19**		

A 1 BLACK



A 2 BLACK (2JZ-GTE) A 3 Ⓐ BLACK (2JZ-GE) A 3 Ⓑ GRAY

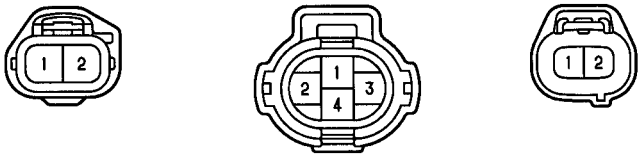

A 4 GRAY



A12 Ⓒ ORANGE

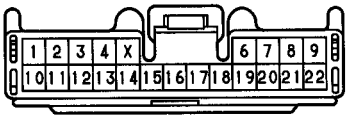

A13 Ⓐ ORANGE

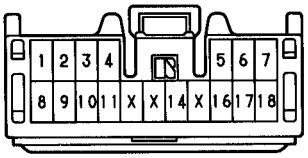

A14 Ⓑ ORANGE

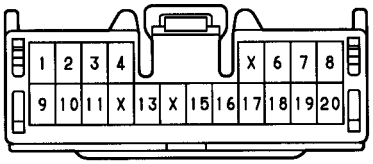

A15



A16 BLACK

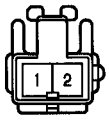

A17 GRAY



A24

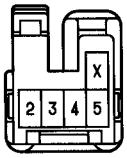

A25

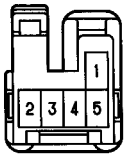

A26

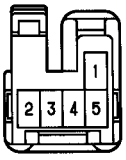

B 3 BLACK

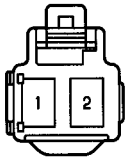

B 4 Ⓐ BLACK

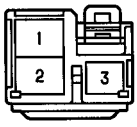

B 5 Ⓑ BLACK

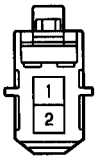

C10 Ⓐ BLUE

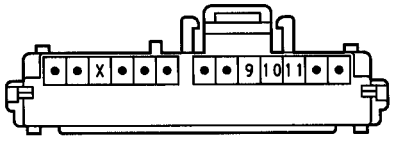

(2JZ-GTE) C12 Ⓑ

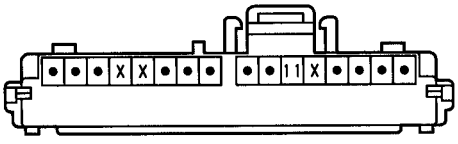

(2JZ-GE) C12 Ⓑ

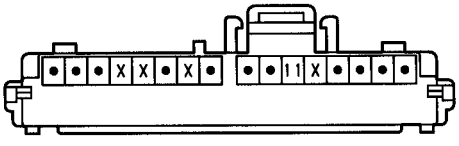

E 5 DARK GRAY



(2JZ-GTE) E10 DARK GRAY

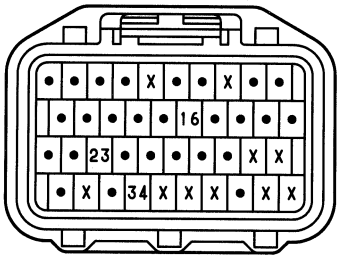

(2JZ-GE) E10 DARK GRAY

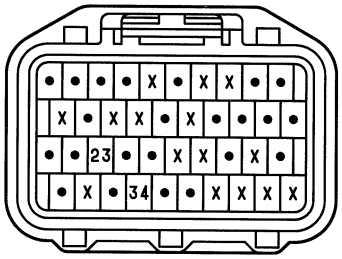

E11



H12 (A) ORANGE

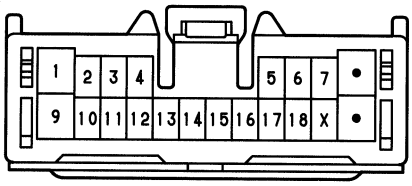

H13 (B) ORANGE

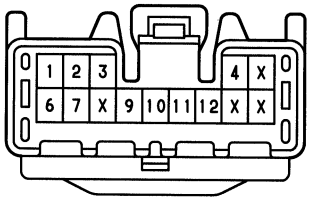

I 4 BLACK

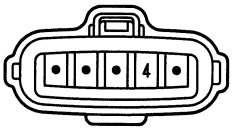

J 1

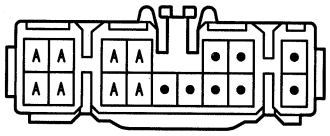

(HINT:SEE PAGE 7)

R 1 BLACK



R 2 BLACK



R 3 GRAY

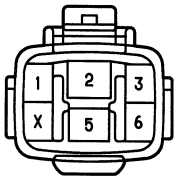

T 6

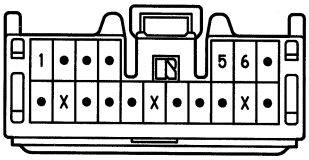

V10 BLACK



GROUND POINT

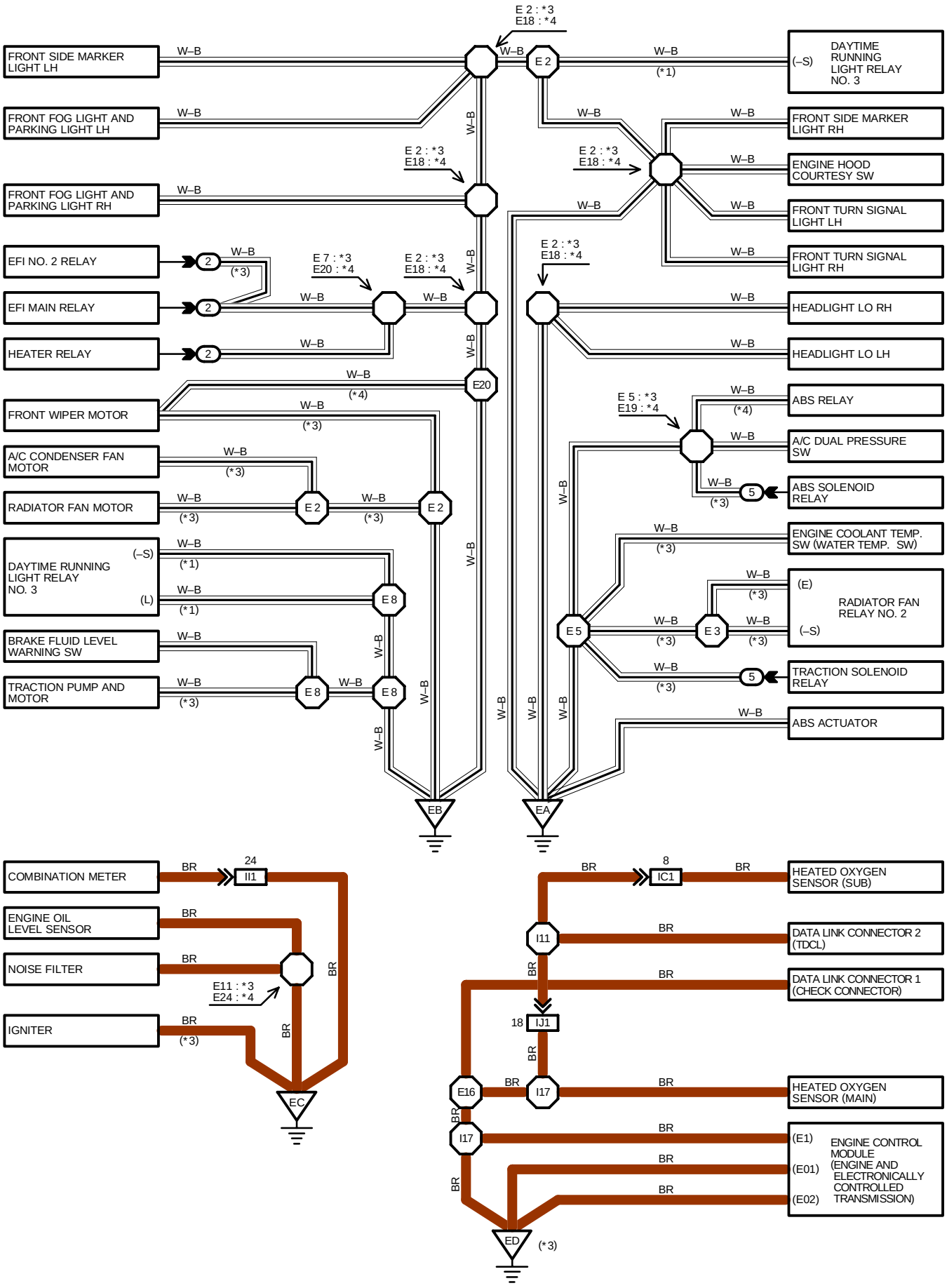

*1 : CANADA
*2 : USA
*3 : 2JZ–GTE
*4 : 2JZ–GE

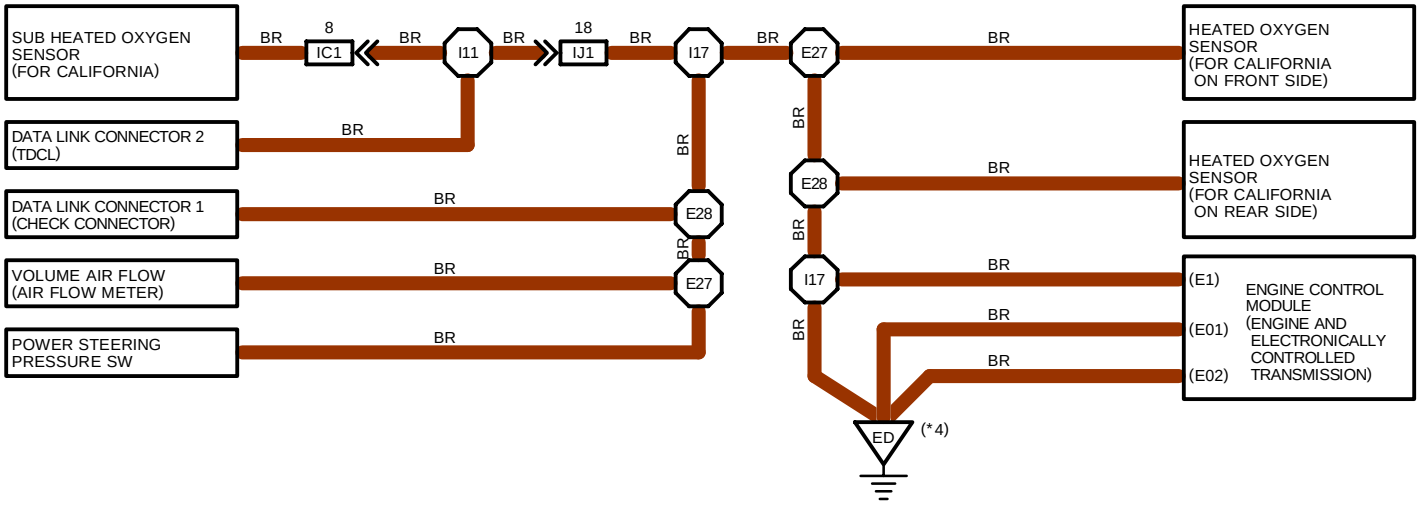

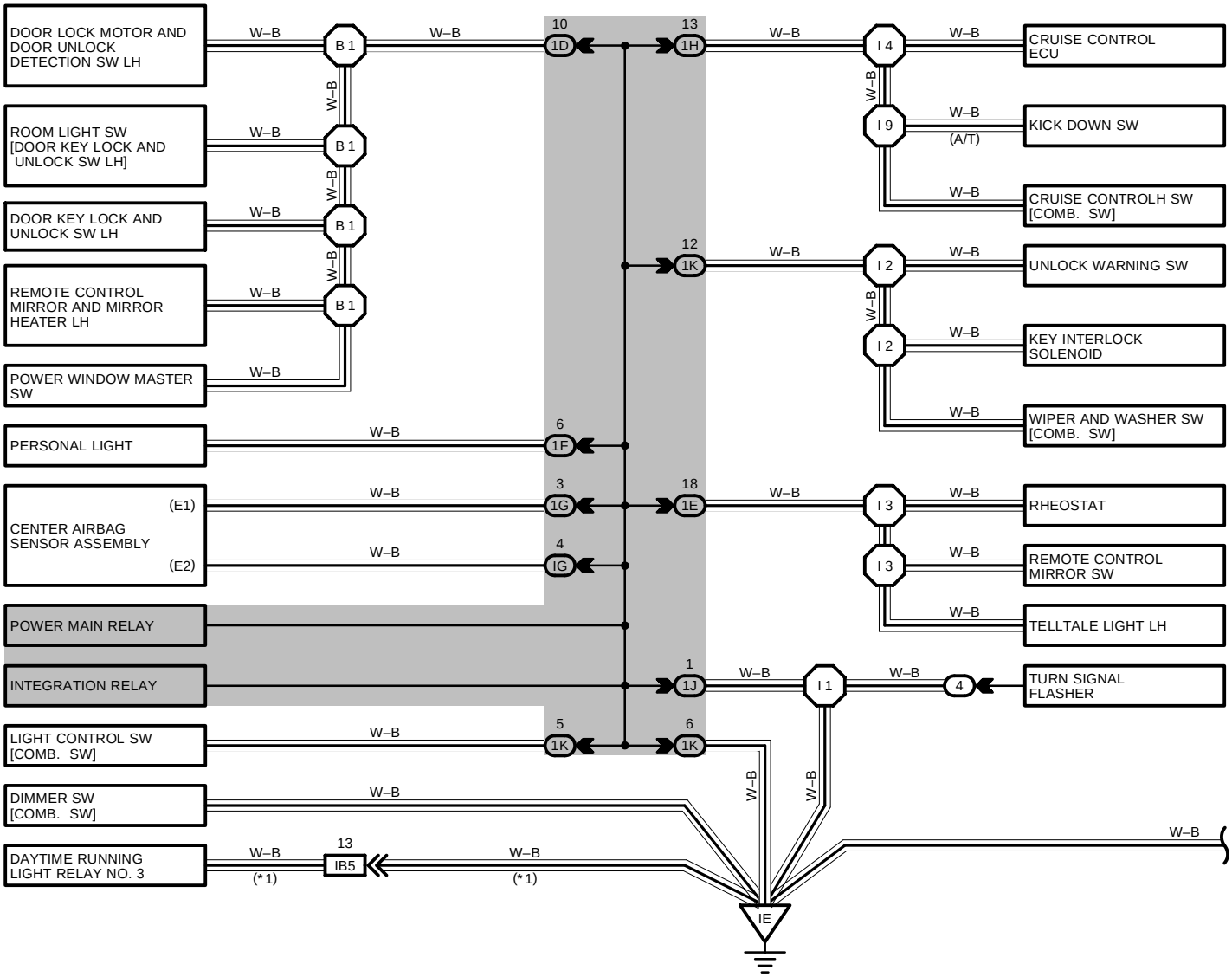

GROUND POINT

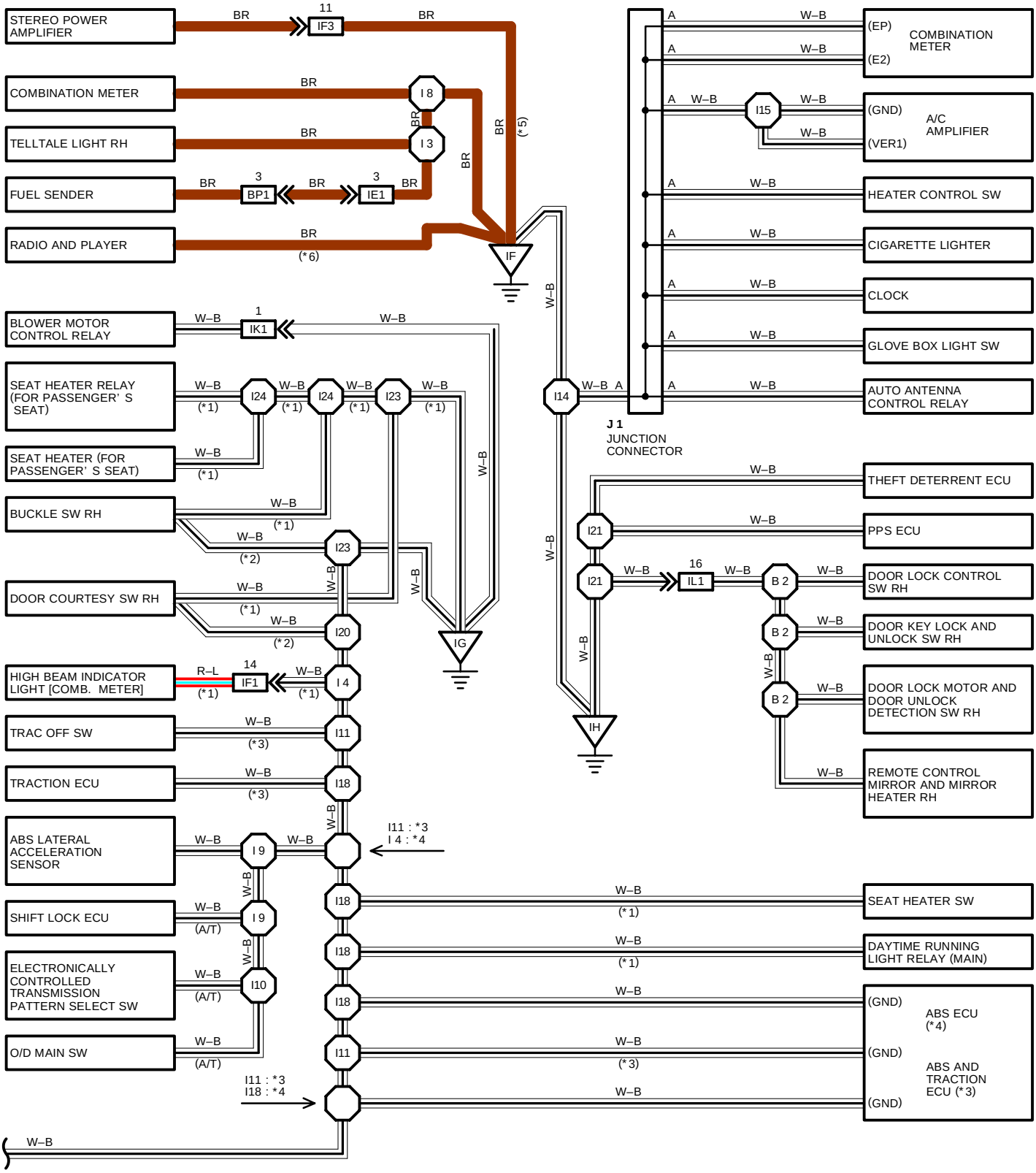

*1 : CANADA
*2 : USA
*3 : 2JZ–GTE
*4 : 2JZ–GE
*5 : W/ STEREO POWER AMPLIFIER
*6 : W/O STEREO POWER AMPLIFIER

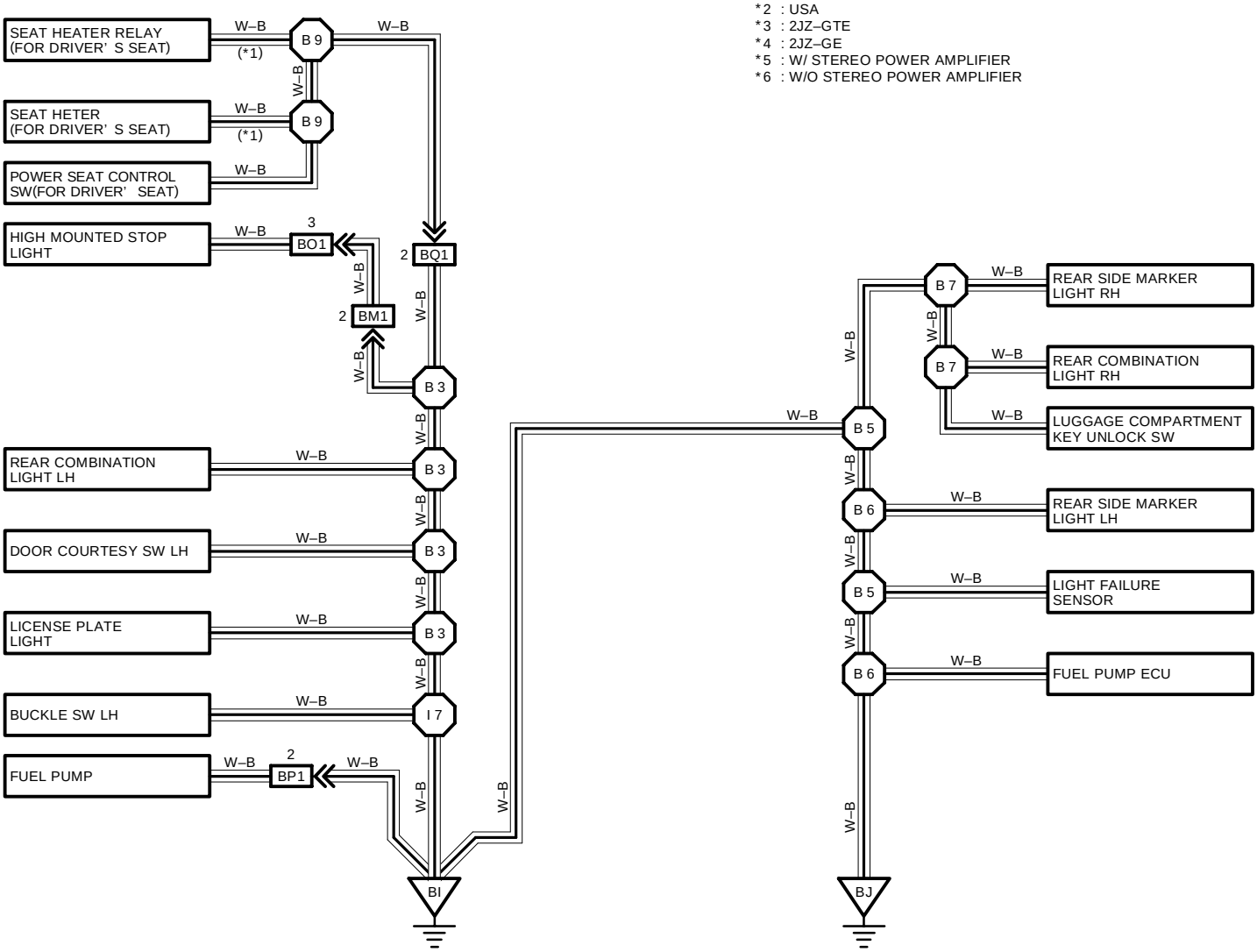

GROUND POINT

: PARTS LOCATION

CODE	SEE PAGE	CODE		SEE PAGE	CODE	SEE PAGE
J 1	29					

: RELAY BLOCKS

CODE	SEE PAGE	RELAY BLOCKS (RELAY BLOCK LOCATION)
2	22	R/B NO. 2 (ENGINE COMPARTMENT LEFT
4	23	R/B NO. 4 (LEFT KICK PANEL)
5	23	R/B NO. 5 (ENGINE COMPARTMENT RIGHT)

: JUNCTION BLOCK AND WIRE HARNESS CONNECTOR

CODE	SEE PAGE	JUNCTION BLOCK AND WIRE HARNESS (CONNECTOR LOCATION)
1D	20	FRONT DOOR LH WIRE AND J/B NO. 1 (LEFT KICK PANEL)
1E	20	INSTRUMENT PANEL WIRE AND J/B NO. 1 (LEFT KICK PANEL)
1F	20	ROOF WIRE AND J/B NO. 1 (LEFT KICK PANEL)
1G	20	COWL WIRE AND J/B NO. 1 (LEFT KICK PANEL)
1H		
1J		
1K		

: CONNECTOR JOINING WIRE HARNESS AND WIRE HARNESS

CODE	SEE PAGE	JOINING WIRE HARNESS AND WIRE HARNESS (CONNECTOR LOCATION)
IB5	36	ENGINE ROOM MAIN WIRE AND COWL WIRE (RIGHT KICK PANEL)
IC1	36	FLOOR NO. 2 WIRE AND COWL WIRE (LEFT KICK PANEL)
IE1	36	INSTRUMENT PANEL WIRE AND FLOOR NO. 2 WIRE (LEFT KICK PANEL)
IF1	36	INSTRUMENT PANEL WIRE AND COWL WIRE (INSTRUMENT PANEL REINFORCEMENT LH)
IF3	36	INSTRUMENT PANEL WIRE AND COWL WIRE (RIGHT KICK PANEL)
II1	38	ENGINE WIRE AND INSTRUMENT PANEL WIRE (RIGHT KICK PANEL)
IJ1	38	ENGINE WIRE AND COWL WIRE (RIGHT KICK PANEL)
IK1	38	COWL NO. 4 WIRE AND COWL WIRE (RIGHT KICK PANEL)
IL1	38	FRONT DOOR RH WIRE AND INSTRUMENT PANEL WIRE
BM1	40	BACK DOOR NO. 1 WIRE AND FLOOR NO. 2 WIRE (LEFT SIDE OF PACKAGE TRAY TRIM)
BO1	40	BACK DOOR NO. 2 WIRE AND BACK DOOR NO. 1 WIRE
BP1	40	FUEL GAUGE WIRE AND FLOOR NO. 2 WIRE (LUGGAGE ROOM FRONT LH)
BQ1	42	FLOOR NO. 2 WIRE AND SEAT WIRE (UNDER THE FRONT LH SEAT)

: GROUND POINTS

CODE	SEE PAGE	GROUND POINTS LOCATION
EA	32 (2JZ–GTE)	FRONT SIDE OF RIGHT FENDER
	34 (2JZ–GE)	
EB	32 (2JZ–GTE)	FRONT SIDE OF LEFT FENDER
	34 (2JZ–GE)	
EC	32 (2JZ–GTE)	FRONT SIDE OF INTAKE MANIFOLD
	34 (2JZ–GE)	
ED	32 (2JZ–GTE)	REAR SIDE OF INTAKE MANIFOLD
	34 (2JZ–GE)	
IE	36	LEFT KICK PANEL
IF		
IG	36	RIGHT KICK PANEL
IH		
BI	40	LEFT QUARTER PILLAR
BJ	40	LOWER BACK PANEL CENTER

: SPLICE POINTS

CODE	SEE PAGE	WIRE HARNESS WITH SPLICE POINTS	CODE	SEE PAGE	WIRE HARNESS WITH SPLICE POINTS
E 2	32	ENGINE ROOM MAIN WIRE	**I 9**	38	COWL WIRE
E 3			**I10**		
E 5			**I11**		
E 7			**I14**	38	INSTRUMENT PANEL WIRE
E 8			**I15**		
E11	32	ENGINE WIRE	**I16**	38	CONSOLE BOX WIRE
E16			**I17**	38	ENGINE WIRE
E18	34	ENGINE ROOM MAIN WIRE	**I18**	38	COWL WIRE
E19			**I20**	38	COWL WIRE
E20			**I21**	38	INSTRUMENT PANEL WIRE
E24	34	ENGINE WIRE	**I23**	38	COWL WIRE
E27			**I24**		
E28			**B 1**	40	FRONT DOOR LH WIRE
I 1	38	COWL WIRE	**B 2**	40	FRONT DOOR RH WIRE
I 2			**B 3**	40	FLOOR NO. 2 WIRE
I 3	38	INSTRUMENT PANEL WIRE	**B 5**		
I 4	38	COWL WIRE	**B 6**		
I 7	38	FLOOR NO. 2 WIRE	**B 7**		
I 8	38	INSTRUMENT PANEL WIRE	**B 9**	42	SEAT WIRE

J 1

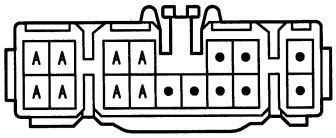

(HINT:SEE PAGE 7)

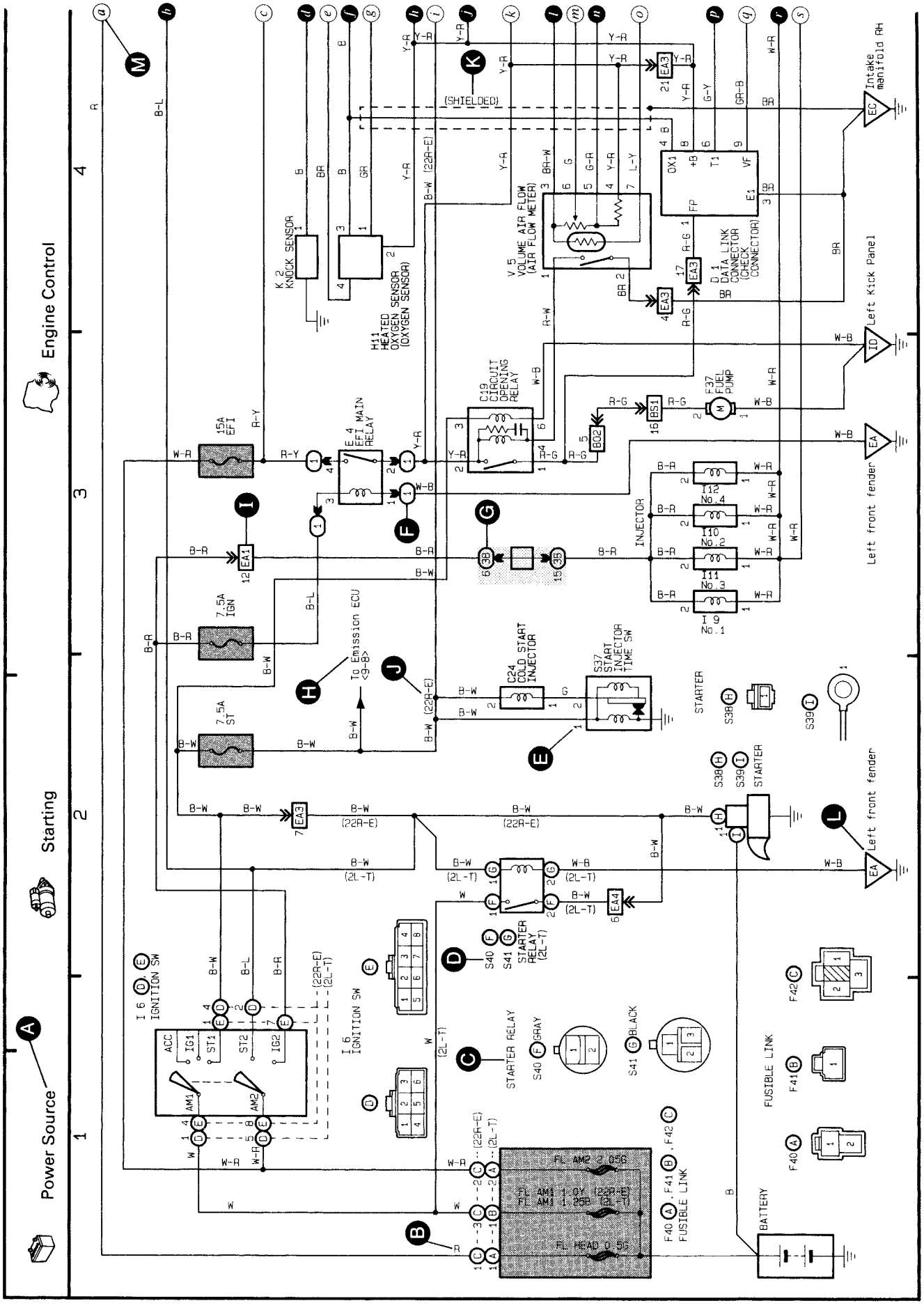
* The system shown here is an EXAMPLE ONLY. It is different to the actual circuit shown in the wiring diagram section.
HOW TO USE THIS MANUAL
Power Source
Starting
Engine Control
BATTERY
FUSIBLE LINK
STARTER RELAY
IGNITION SW
STARTER
INJECTOR
Intake manifold RH
Left front fender
Left Kick Panel
DATA LINK CONNECTOR (CHECK CONNECTOR)
HEATED OXYGEN SENSOR (OXYGEN SENSOR)
KNOCK SENSOR
VOLUME AIR FLOW (AIR FLOW METER)
CIRCUIT OPENING RELAY
EFI MAIN RELAY
FUEL PUMP
COLD START INJECTOR
START INJECTOR TIME SW
To Emission ECU
(SHIELDED)

Ⓐ: System Title

Ⓑ: Indicates the wiring color.

Wire colors are indicated by an alphabetical code.

B	= Black	L	= Blue	R	= Red
BR	= Brown	LG	= Light Green	V	= Violet
G	= Green	O	= Orange	W	= White
GR	= Gray	P	= Pink	Y	= Yellow

The first letter indicates the basic wire color and the second letter indicates the color of the stripe.

Example: L – Y

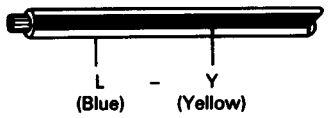

Ⓒ: Indicates the connector to be connected to a part (the numeral indicates the pin No.)

Ⓓ: The position of the parts is the same as shown in the wiring diagram and wire routing.

Ⓔ: Indicates the pin number of the connector. The numbering system is different for female and male connectors.

Example: **Numbered in order from upper left to lower right** **Numbered in order from upper right to lower left**

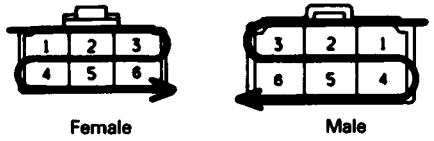

The numbering system for the overall wiring diagram is the same as above.

Ⓕ: Indicates a Relay Block. No Shading is used and only the Relay Block No. is shown to distinguish it from the J/B.

Example: ① Indicates Relay Block No. 1.

Ⓖ: Junction Block (The number in the circle is the J/B No. and connector code is shown beside it). Junction Blocks are shaded to clearly separate them from other parts (different junction blocks are shaded differently for further clarification.).

Example:

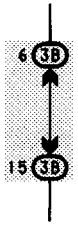

3B indicates that it is inside Junction Block No. 3.

Ⓗ: Indicates related system.

Ⓘ: Indicates the wiring harness and wiring harness connector. The wiring harness with male terminal is shown with arrows **(≫)**.

Outside numerals are pin numbers.

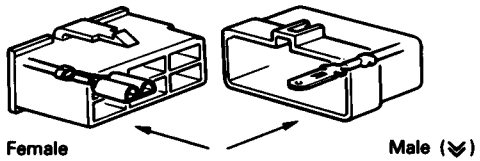

Ⓙ: ( ) is used to indicate different wiring and connector, etc. when the vehicle model, engine type, or specification is different.

Ⓚ: Indicates a shielded cable.



Ⓛ: Indicates and located on ground point.

Ⓜ: The same code occuring on the next page indicates that the wire harness is continuous.

SYSTEM INDEX

SYSTEMS	LOCATION
ABS (Anti–Lock Brake System)	18–3
ABS and Traction Control	19–3
Auto Antenna	24–4
Back–Up Light	16–8 (for 2JZ–GE) 15–8 (for 2JZ–GTE)
Charging	1–4
Cigarette Lighter	21–1
Clock	20–3
Combination Meter	25–3
Cruise Control	17–3
Electric Tension Reducer	20–4
Electronically Controlled Transmission and A/T Indicator	16–3 (for 2JZ–GE) 15–3 (for 2JZ–GTE)
Engine Control	4–3 (for 2JZ–GE) 3–3 (for 2JZ–GTE)
Fog Light	5–4
Front Wiper and Washer	22–4
Headlight	6–3 (for Canada) 5–3 (for USA)
Horn	9–4
Ignition	2–4 (for 2JZ–GE) 2–2 (for 2JZ–GTE)
Illumination	8–3
Interior Light	10–3
Light Auto Turn Off	11–2
Power Seat	12–4
Power Source	1~26–1
Power Window	12–2
PPS (Progressive Power Steering)	20–3
Radiator Fan and Automatic Air Conditioning	26–3
Radio and Player	23–3 (w/ Stereo Power Amplifier) 24–2 (w/o Stereo Power Amplifier)
Remote Window Defogger and Mirror Heater	20–2
Rear Wiper and Washer	22–2
Remote Control Mirror	11–4
Seat Heater (for Canada)	21–4
Shift Lock	21–2
SRS (Supplemental Restraint System)	13–3
Starting	1–2
Stop Light	7–4
Taillight	7–2
Theft Deterrent and Door Lock Control	14–3
Turn Signal and Hazard Warning Light	9–2
Unlock and Seat Belt Warning	10–2

1 SUPRA ELECTRICAL WIRING DIAGRAM

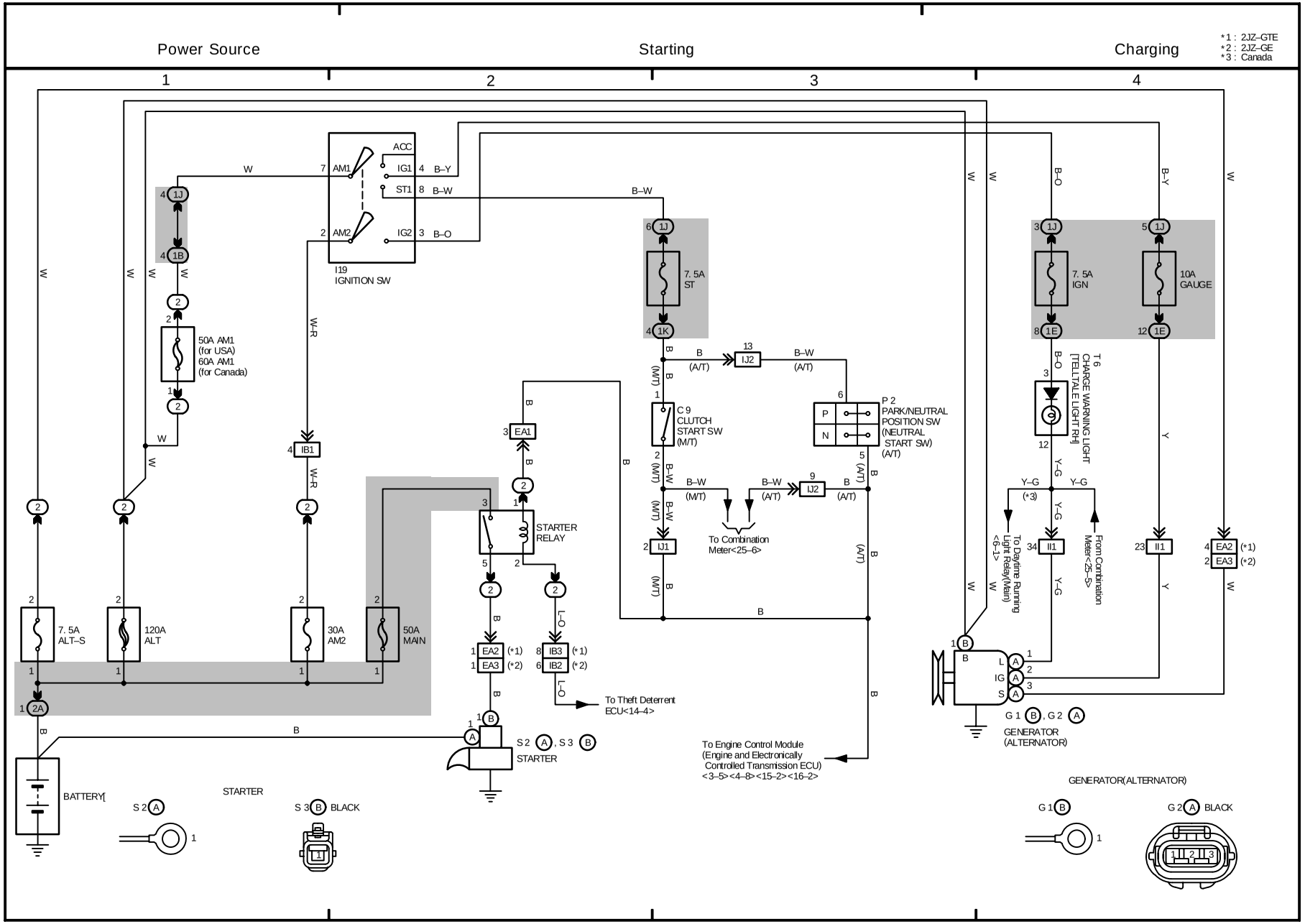

OVERALL ELECTRICAL WIRING DIAGRAM

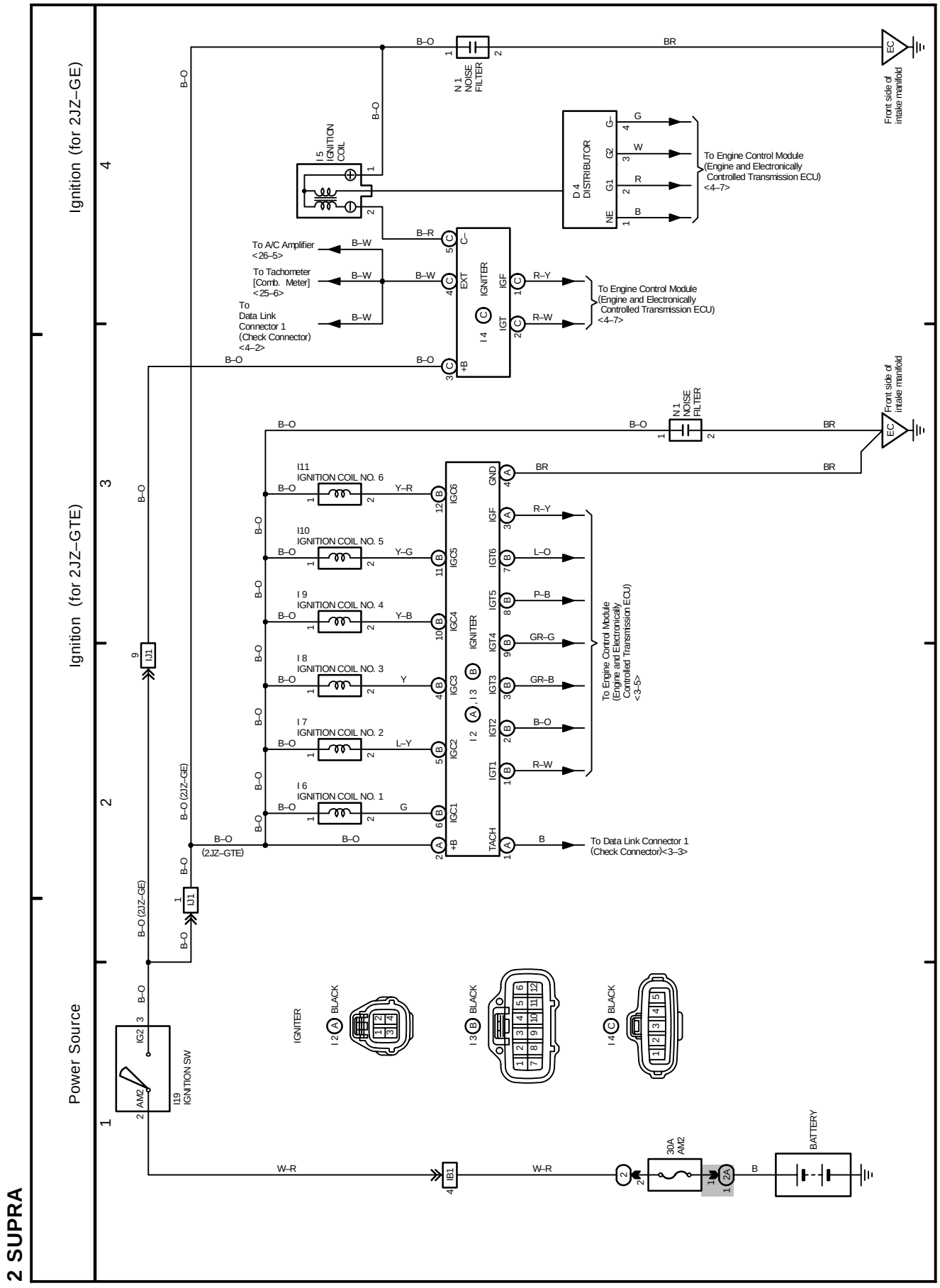

OVERALL ELECTRICAL WIRING DIAGRAM

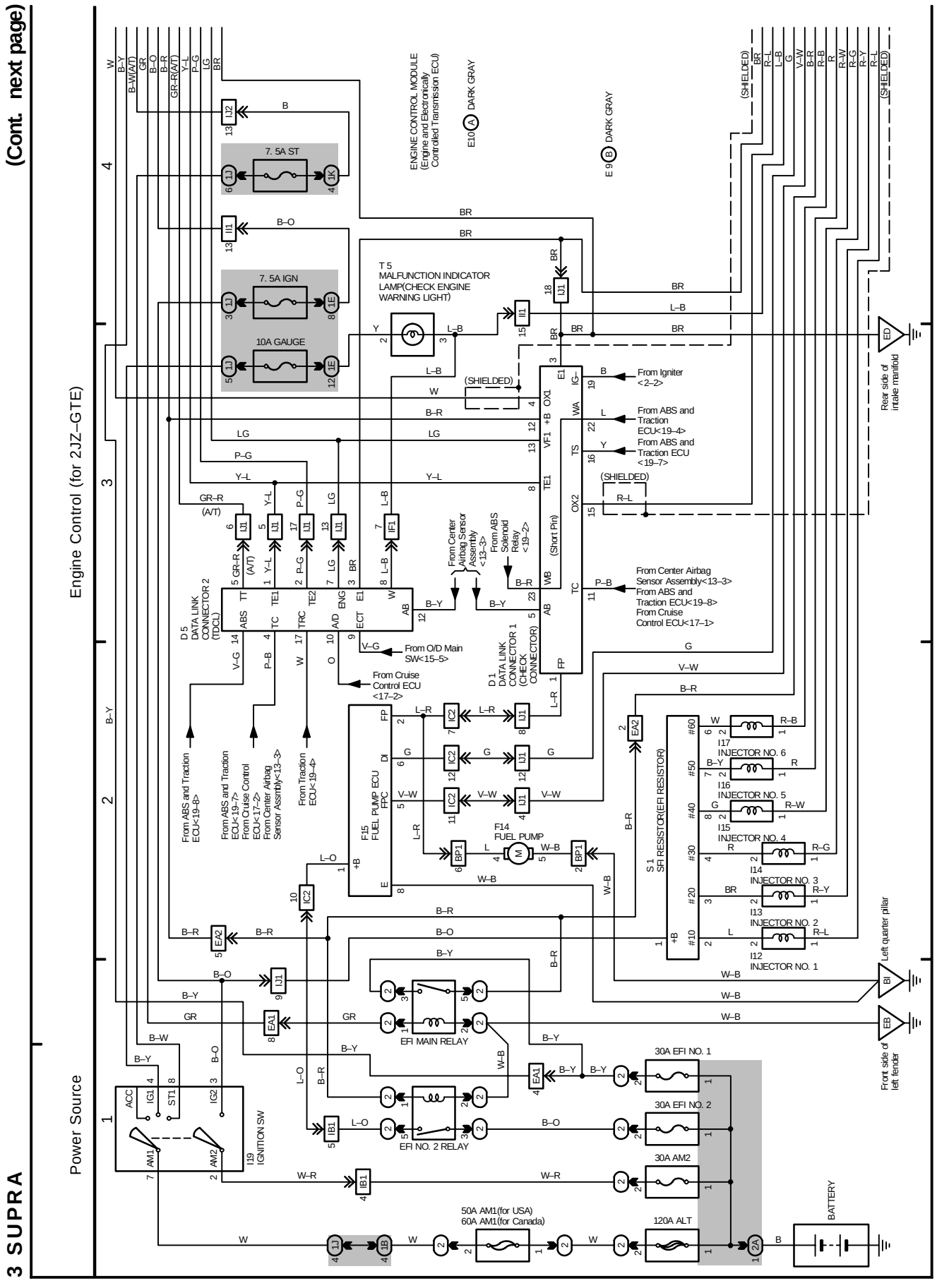

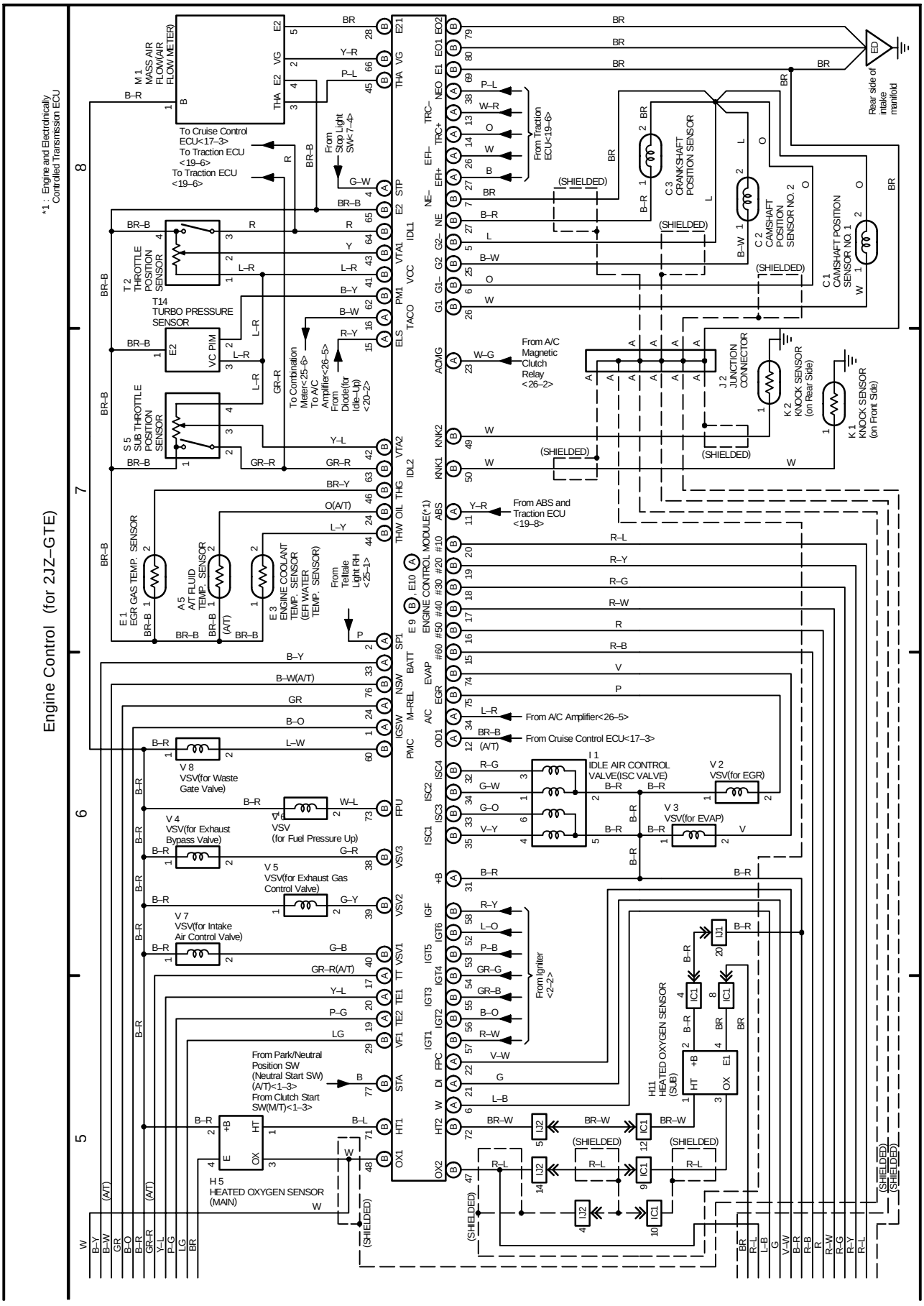
Engine Control (for 2JZ–GTE)
*1 : Engine and Electronically Controlled Transmission ECU
M 1 MASS AIR FLOW(AIR FLOW METER)
To Cruise Control ECU<17–3>
To Traction ECU <19–6>
To Traction ECU <19–6>
From Stop Light SW<7–4>
From Traction ECU<19–6>
T 2 THROTTLE POSITION SENSOR
T14 TURBO PRESSURE SENSOR
S 5 SUB THROTTLE POSITION SENSOR
To Combination Meter<25–6>
To A/C Amplifier<26–5>
From Diode(for Idle–Up) <20–2>
From A/C Magnetic Clutch Relay <26–2>
C 3 CRANKSHAFT POSITION SENSOR
C 2 CAMSHAFT POSITION SENSOR NO. 2
C 1 CAMSHAFT POSITION SENSOR NO. 1
J 2 JUNCTION CONNECTOR
K 2 KNOCK SENSOR (on Rear Side)
K 1 KNOCK SENSOR (on Front Side)
Rear side of intake manifold
E 1 EGR GAS TEMP. SENSOR
A 5 A/T FLUID TEMP. SENSOR
E 3 ENGINE COOLANT TEMP. SENSOR (EFI WATER TEMP. SENSOR)
From Telltale Light RH <25–1>
From ABS and Traction ECU <19–8>
E 9 ENGINE CONTROL MODULE(*1)
V 8 VSV(for Waste Gate Valve)
V 4 VSV(for Exhaust Bypass Valve)
V 6 VSV (for Fuel Pressure Up)
V 5 VSV(for Exhaust Gas Control Valve)
V 7 VSV(for Intake Air Control Valve)
From A/C Amplifier<26–5>
From Cruise Control ECU<17–3>
I 1 IDLE AIR CONTROL VALVE(ISC VALVE)
V 2 VSV(for EGR)
V 3 VSV(for EVAP)
From Igniter <2–2>
From Park/Neutral Position SW (Neutral Start SW) (A/T)<1–3>
From Clutch Start SW(M/T)<1–3>
H 5 HEATED OXYGEN SENSOR (MAIN)
H11 HEATED OXYGEN SENSOR (SUB)
(SHIELDED)
(A/T)
5
6
7
8

OVERALL ELECTRICAL WIRING DIAGRAM

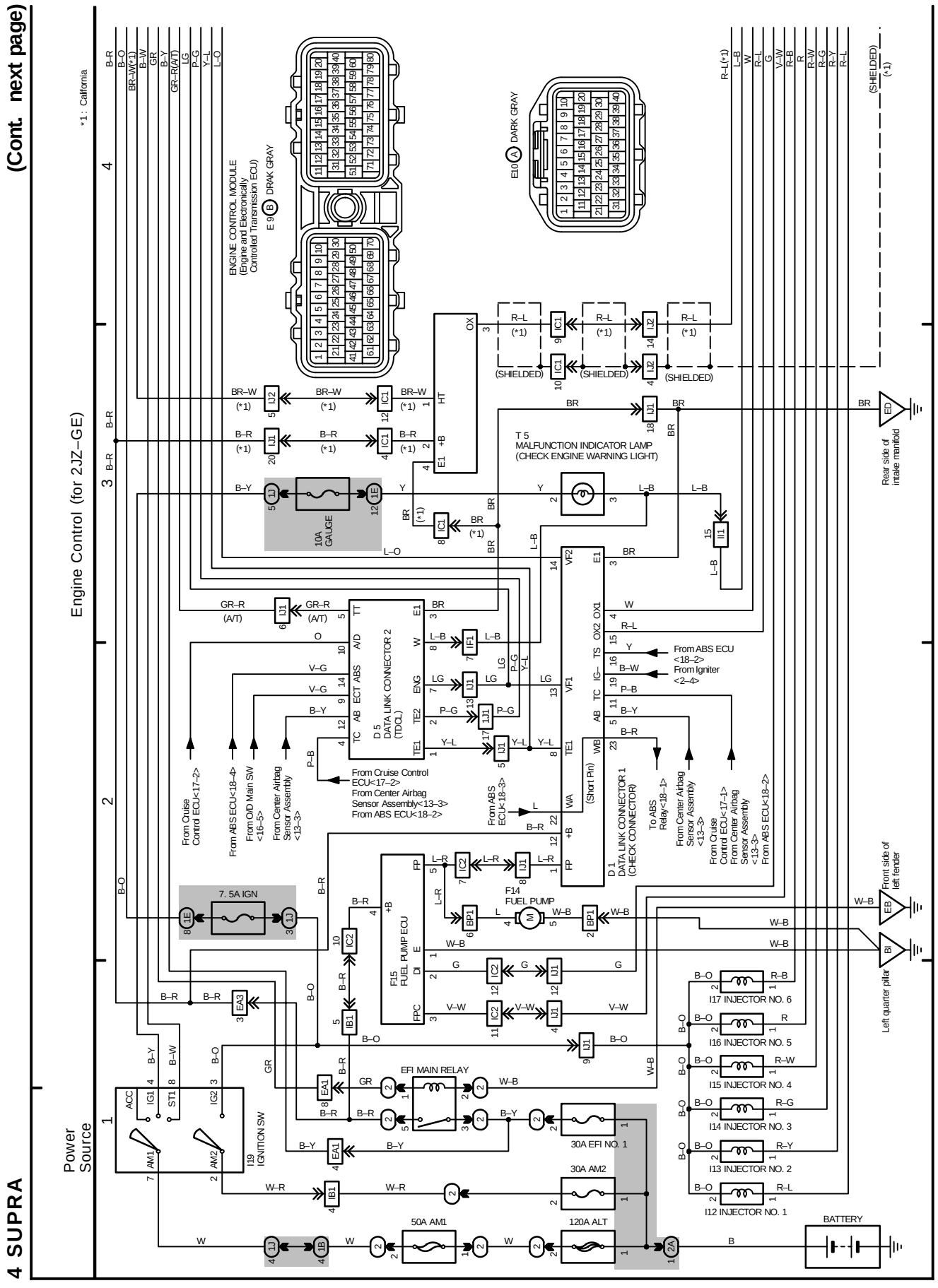

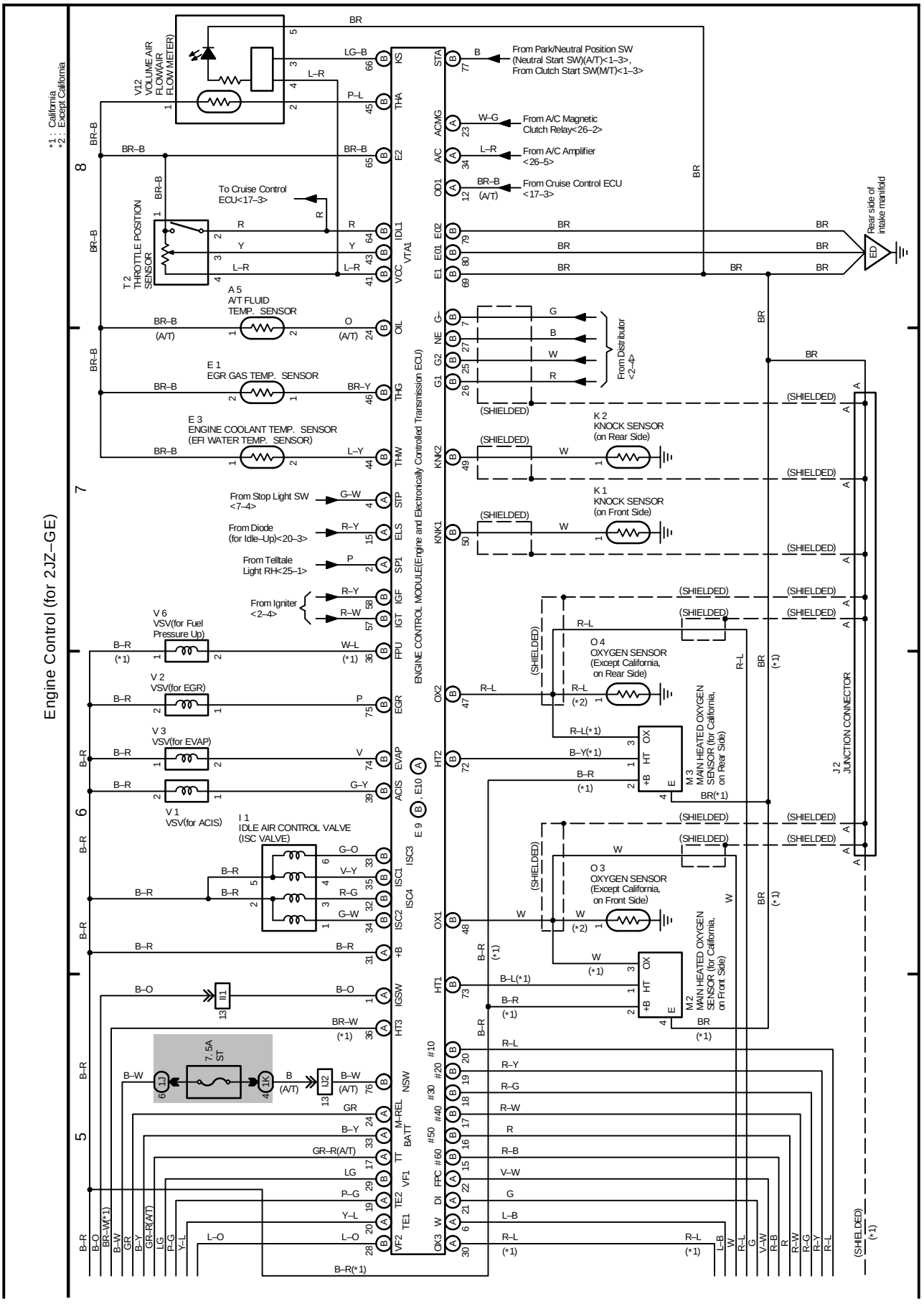
Engine Control (for 2JZ–GE)
*1 : California
*2 : Except California
ENGINE CONTROL MODULE(Engine and Electronically Controlled Transmission ECU)
V12 VOLUME AIR FLOW(AIR FLOW METER)
T 2 THROTTLE POSITION SENSOR
To Cruise Control ECU<17–3>
A 5 A/T FLUID TEMP. SENSOR
E 1 EGR GAS TEMP. SENSOR
E 3 ENGINE COOLANT TEMP. SENSOR (EFI WATER TEMP. SENSOR)
From Stop Light SW <7–4>
From Diode (for Idle–Up)<20–3>
From Telltale Light RH<25–1>
From Igniter <2–4>
V 6 VSV(for Fuel Pressure Up)
V 2 VSV(for EGR)
V 3 VSV(for EVAP)
V 1 VSV(for ACIS)
I 1 IDLE AIR CONTROL VALVE (ISC VALVE)
7. 5A ST
From Park/Neutral Position SW (Neutral Start SW)(A/T)<1–3>, From Clutch Start SW(M/T)<1–3>
From A/C Magnetic Clutch Relay<26–2>
From A/C Amplifier <26–5>
From Cruise Control ECU <17–3>
From Distributor <2–4>
K 2 KNOCK SENSOR (on Rear Side)
K 1 KNOCK SENSOR (on Front Side)
O 4 OXYGEN SENSOR (Except California, on Rear Side)
O 3 OXYGEN SENSOR (Except California, on Front Side)
M 3 MAIN HEATED OXYGEN SENSOR (for California, on Rear Side)
M 2 MAIN HEATED OXYGEN SENSOR (for California, on Front Side)
J 2 JUNCTION CONNECTOR
Rear side of intake manifold
(SHIELDED)

OVERALL ELECTRICAL WIRING DIAGRAM

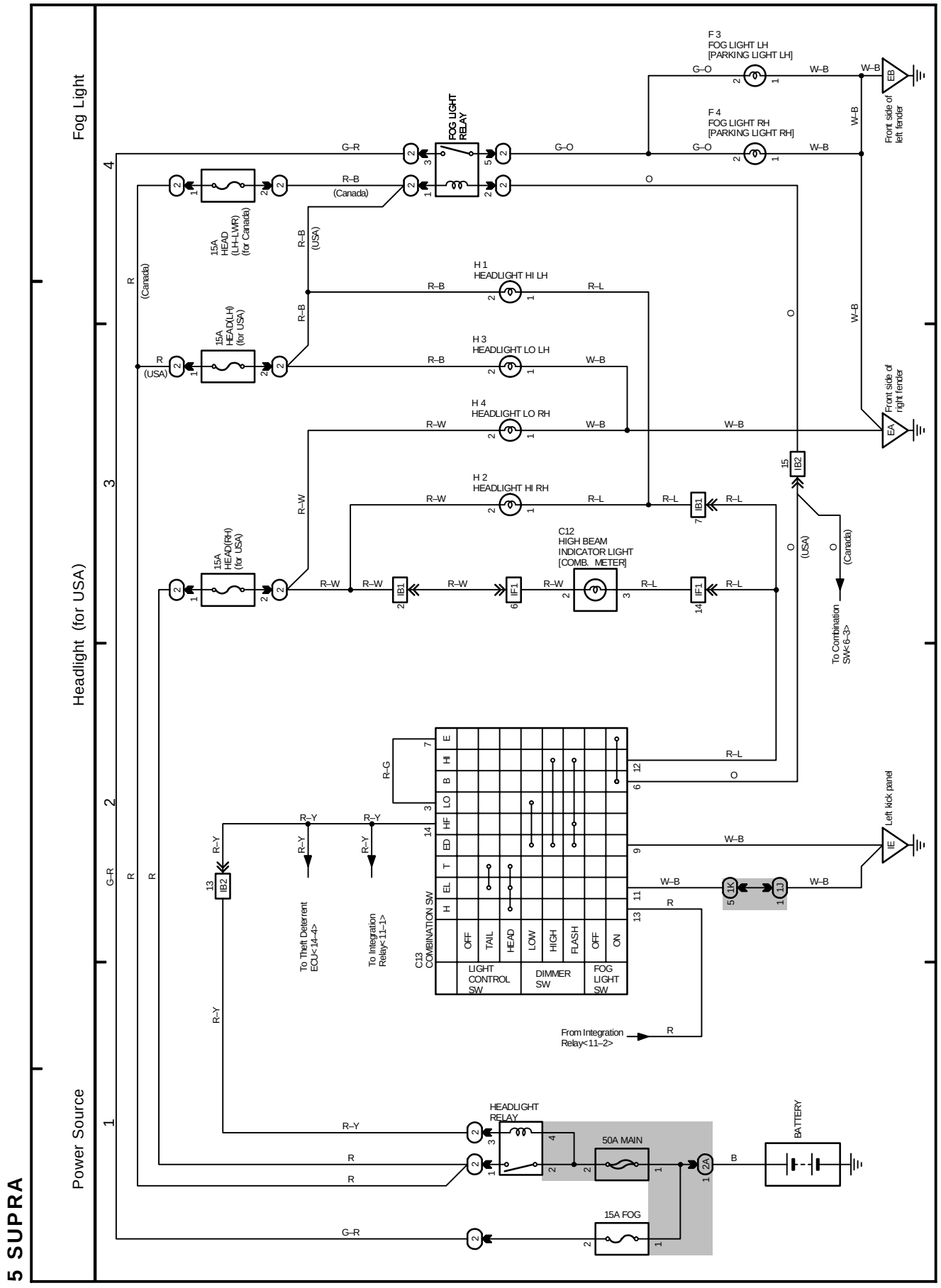

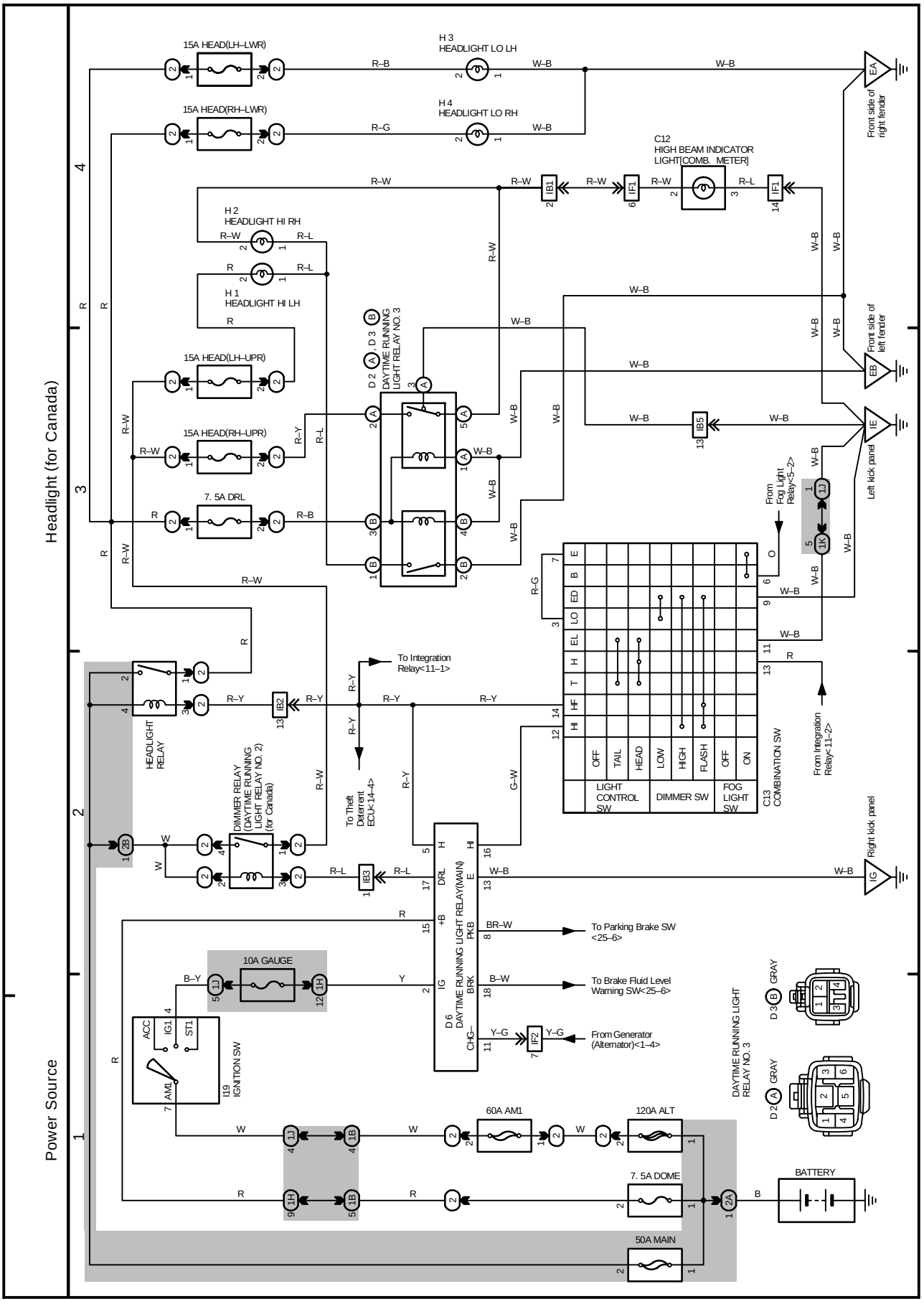
Headlight (for Canada)
Power Source
15A HEAD(LH–LWR)
15A HEAD(RH–LWR)
15A HEAD(LH–UPR)
15A HEAD(RH–UPR)
7. 5A DRL
H 1 HEADLIGHT HI LH
H 2 HEADLIGHT HI RH
H 3 HEADLIGHT LO LH
H 4 HEADLIGHT LO RH
C12 HIGH BEAM INDICATOR LIGHT[COMB. METER]
D 2 D 3 DAYTIME RUNNING LIGHT RELAY NO. 3
HEADLIGHT RELAY
DIMMER RELAY (DAYTIME RUNNING LIGHT RELAY NO. 2) (for Canada)
D 6 DAYTIME RUNNING LIGHT RELAY(MAIN)
I19 IGNITION SW
10A GAUGE
60A AM1
120A ALT
7. 5A DOME
50A MAIN
BATTERY
C13 COMBINATION SW
LIGHT CONTROL SW
DIMMER SW
FOG LIGHT SW
To Integration Relay<11–1>
To Theft Deterrent ECU<14–4>
From Integration Relay<11–2>
From Fog Light Relay<5–2>
To Parking Brake SW <25–6>
To Brake Fluid Level Warning SW<25–6>
From Generator (Alternator)<1–4>
Front side of right fender
Front side of left fender
Left kick panel
Right kick panel
DAYTIME RUNNING LIGHT RELAY NO. 3

OVERALL ELECTRICAL WIRING DIAGRAM

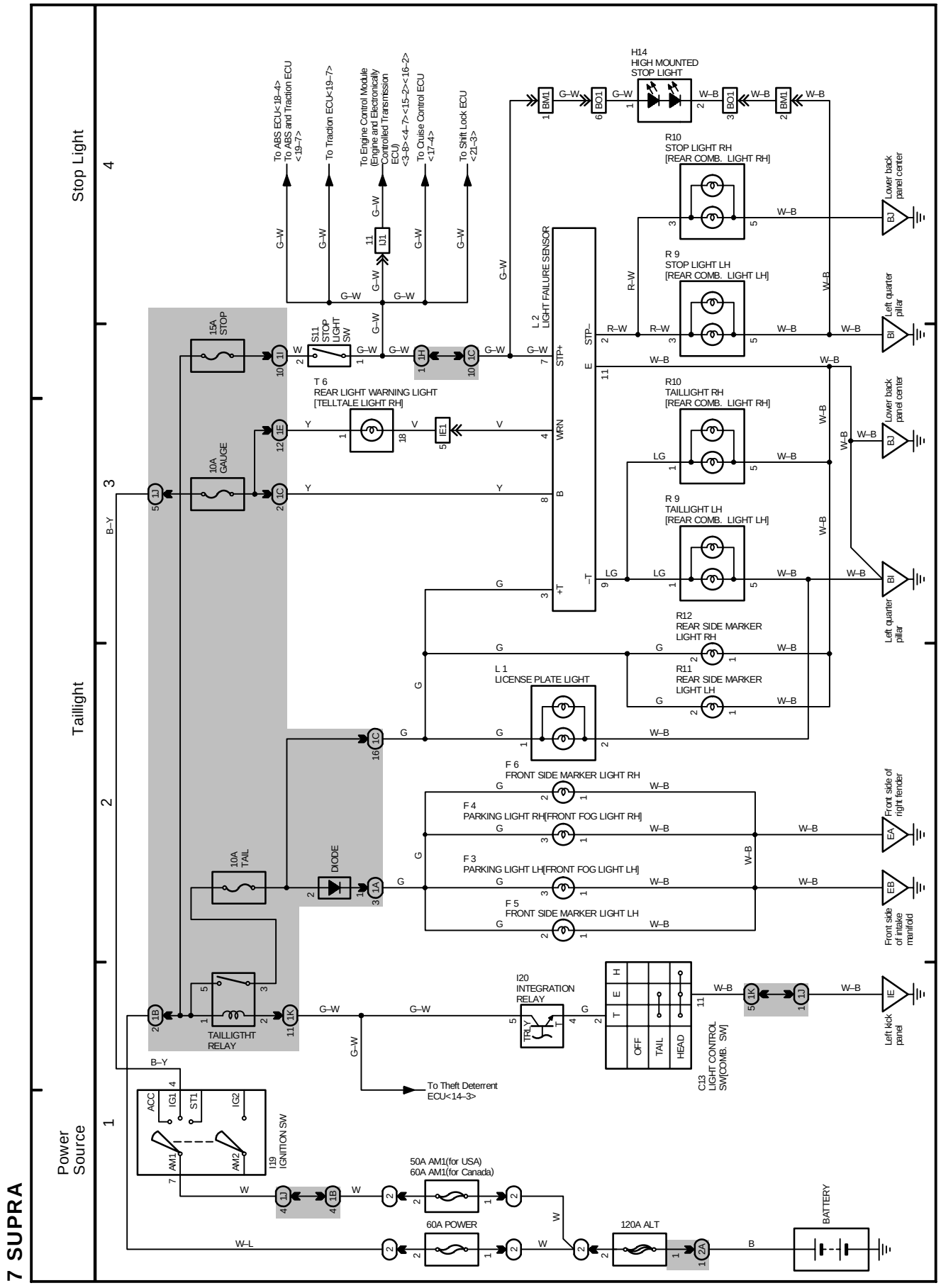

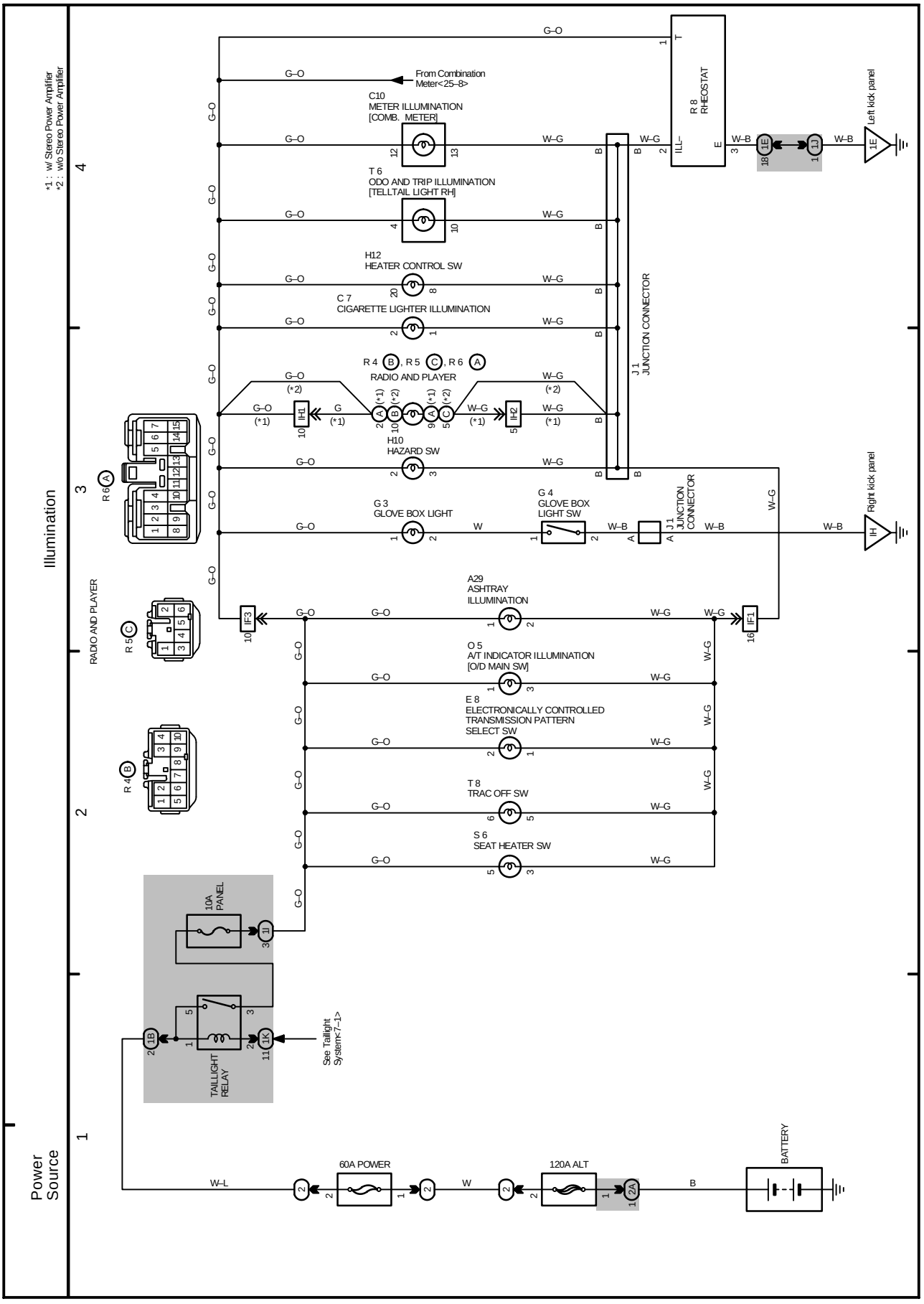
Power Source
Illumination
*1 : w/ Stereo Power Amplifier
*2 : w/o Stereo Power Amplifier
From Combination Meter<25–8>
C10 METER ILLUMINATION [COMB. METER]
T 6 ODO AND TRIP ILLUMINATION [TELLTAIL LIGHT RH]
H12 HEATER CONTROL SW
C 7 CIGARETTE LIGHTER ILLUMINATION
R 4 B , R 5 C , R 6 A RADIO AND PLAYER
H10 HAZARD SW
G 3 GLOVE BOX LIGHT
G 4 GLOVE BOX LIGHT SW
A29 ASHTRAY ILLUMINATION
O 5 A/T INDICATOR ILLUMINATION [O/D MAIN SW]
E 8 ELECTRONICALLY CONTROLLED TRANSMISSION PATTERN SELECT SW
T 8 TRAC OFF SW
S 6 SEAT HEATER SW
R 8 RHEOSTAT
J1 JUNCTION CONNECTOR
Left kick panel
Right kick panel
RADIO AND PLAYER
10A PANEL
TAILLIGHT RELAY
See Taillight System<7–1>
60A POWER
120A ALT
BATTERY

OVERALL ELECTRICAL WIRING DIAGRAM

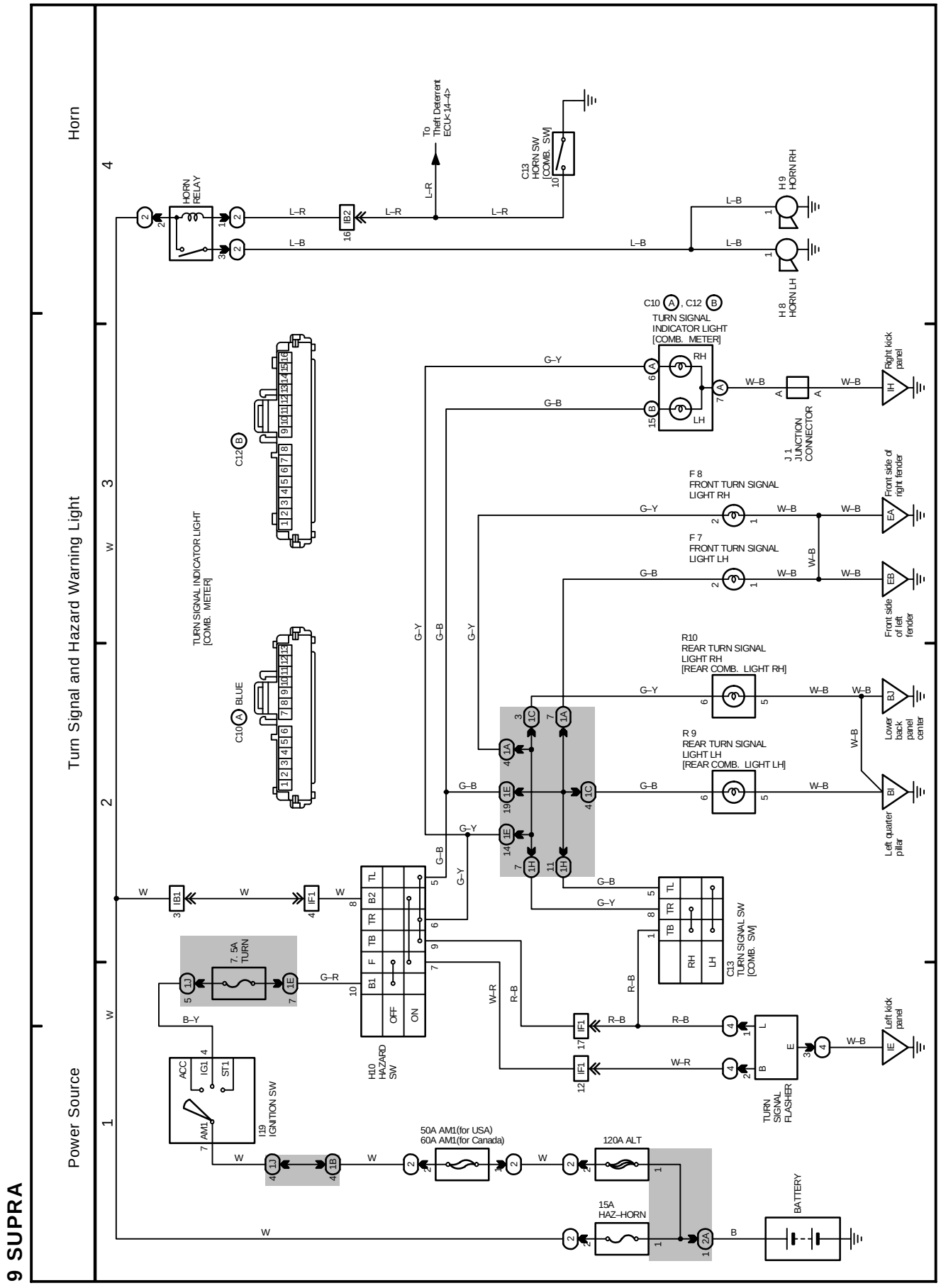

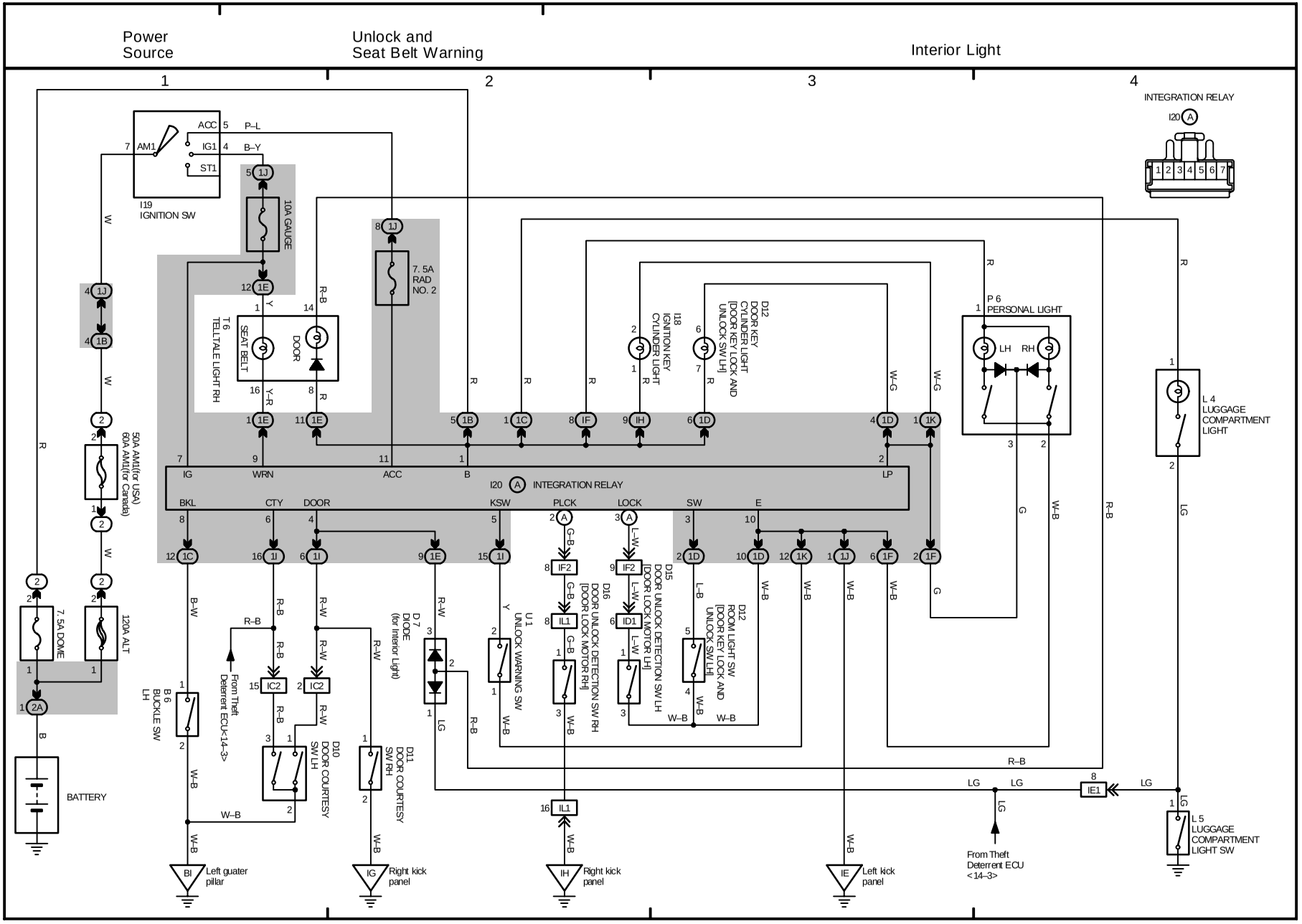
Power Source
Unlock and Seat Belt Warning
Interior Light
1
2
3
4
INTEGRATION RELAY
I20 A
I19 IGNITION SW
ACC
IG1
ST1
AM1
10A GAUGE
7. 5A RAD NO. 2
T 6 TELLTALE LIGHT RH
SEAT BELT
DOOR
I18 IGNITION KEY CYLINDER LIGHT
D12 DOOR KEY CYLINDER LIGHT [DOOR KEY LOCK AND UNLOCK SW LH]
P 6 PERSONAL LIGHT
LH
RH
L 4 LUGGAGE COMPARTMENT LIGHT
50A AM1(for USA) 60A AM1(for Canada)
7. 5A DOME
120A ALT
BATTERY
IG
WRN
ACC
B
LP
BKL
CTY
DOOR
KSW
PLCK
LOCK
SW
E
B 6 BUCKLE SW LH
From Theft Deterrent ECU<14-3>
D10 DOOR COURTESY SW LH
D11 DOOR COURTESY SW RH
D7 DIODE (for Interior Light)
U1 UNLOCK WARNING SW
D16 DOOR UNLOCK DETECTION SW RH [DOOR LOCK MOTOR RH]
D15 DOOR UNLOCK DETECTION SW LH [DOOR LOCK MOTOR LH]
D12 ROOM LIGHT SW [DOOR KEY LOCK AND UNLOCK SW LH]
L 5 LUGGAGE COMPARTMENT LIGHT SW
From Theft Deterrent ECU <14-3>
BI Left guater pillar
IG Right kick panel
IH Right kick panel
IE Left kick panel

OVERALL ELECTRICAL WIRING DIAGRAM

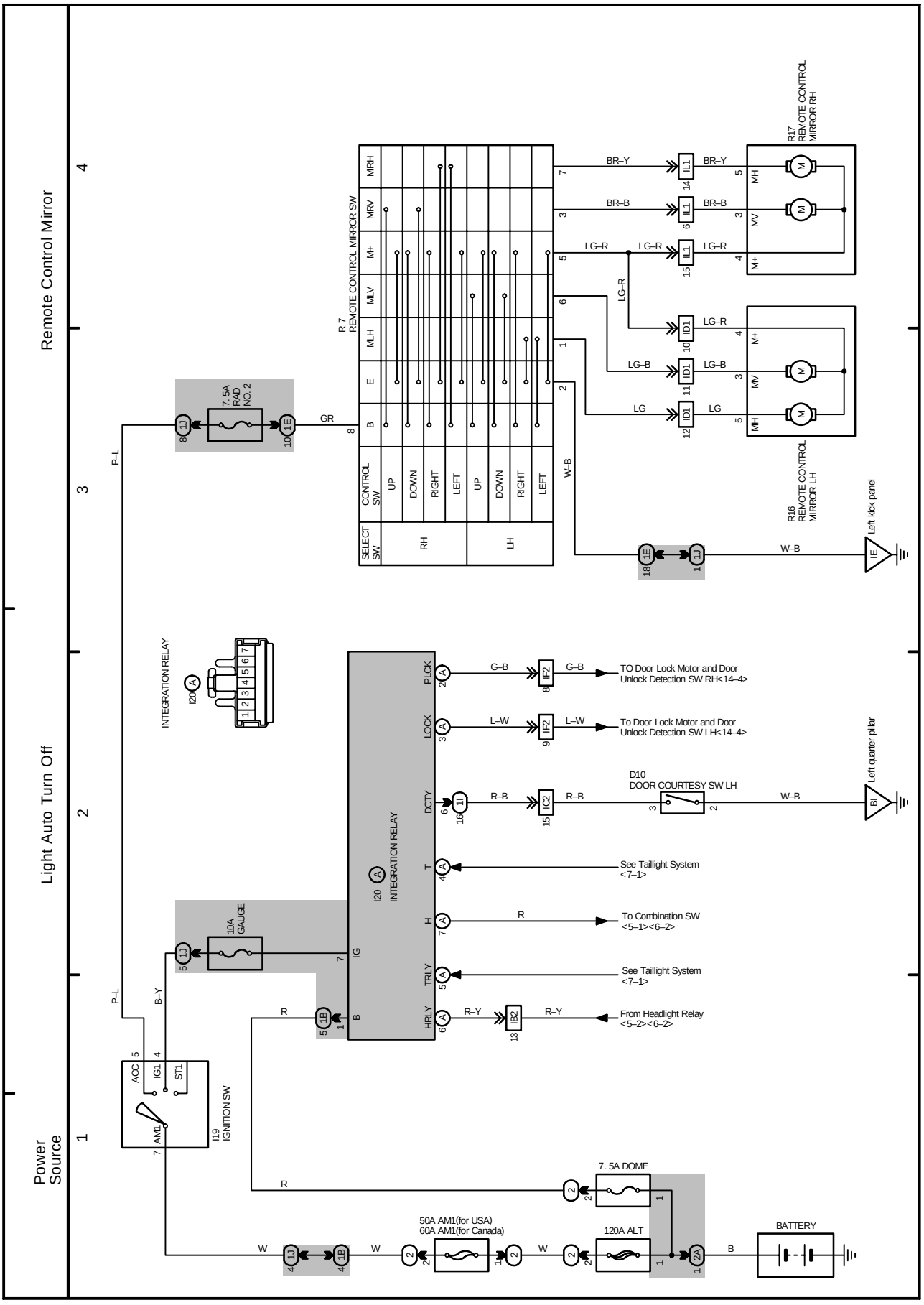

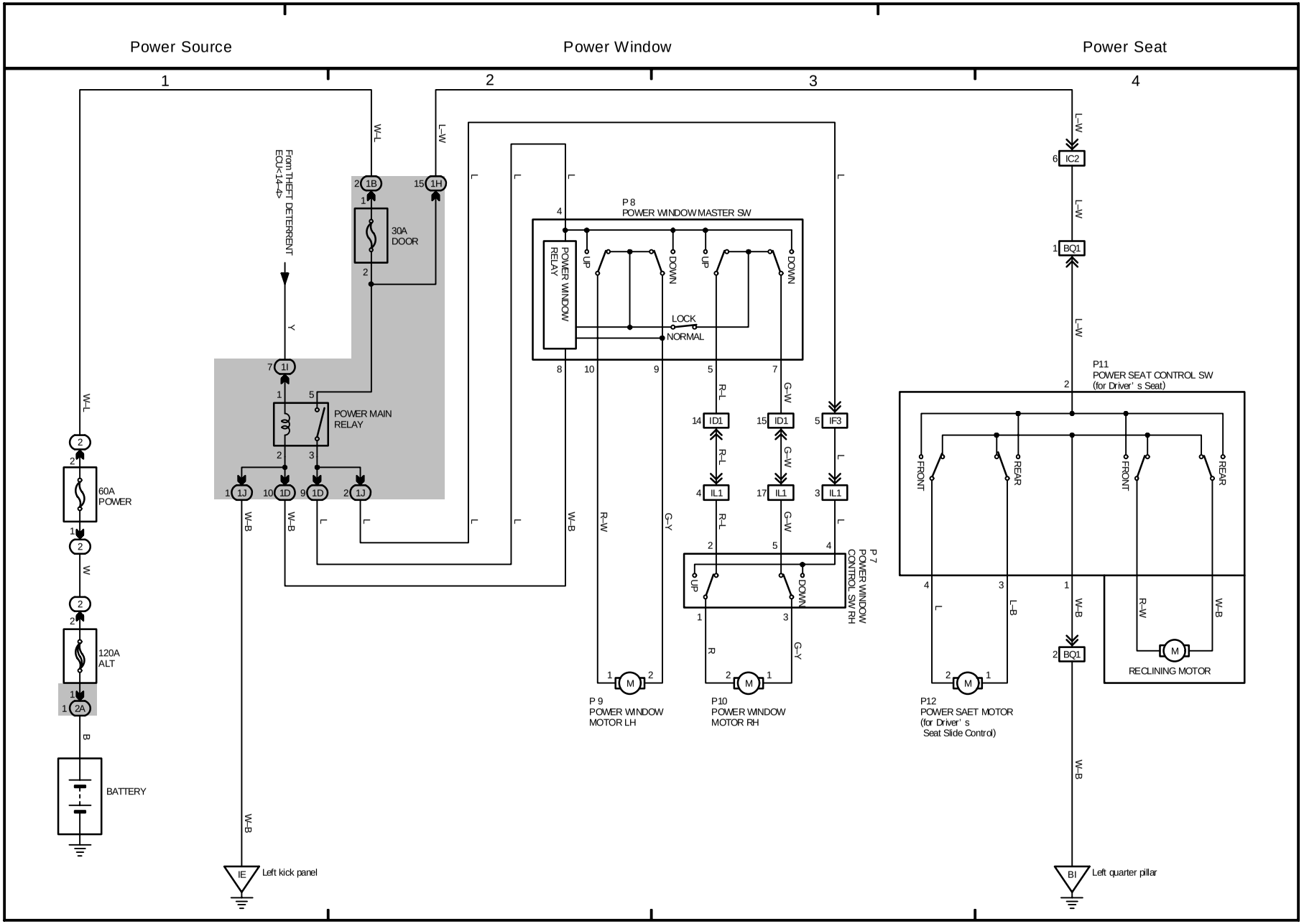
Power Source
Power Window
Power Seat
1
2
3
4
From THEFT DETERRENT ECU<14-4>
30A DOOR
POWER MAIN RELAY
60A POWER
120A ALT
BATTERY
Left kick panel
P 8
POWER WINDOW MASTER SW
POWER WINDOW RELAY
UP
DOWN
LOCK
NORMAL
P 9
POWER WINDOW MOTOR LH
P10
POWER WINDOW MOTOR RH
P 7
POWER WINDOW CONTROL SW RH
P11
POWER SEAT CONTROL SW (for Driver's Seat)
FRONT
REAR
RECLINING MOTOR
P12
POWER SAET MOTOR (for Driver's Seat Slide Control)
Left quarter pillar

OVERALL ELECTRICAL WIRING DIAGRAM

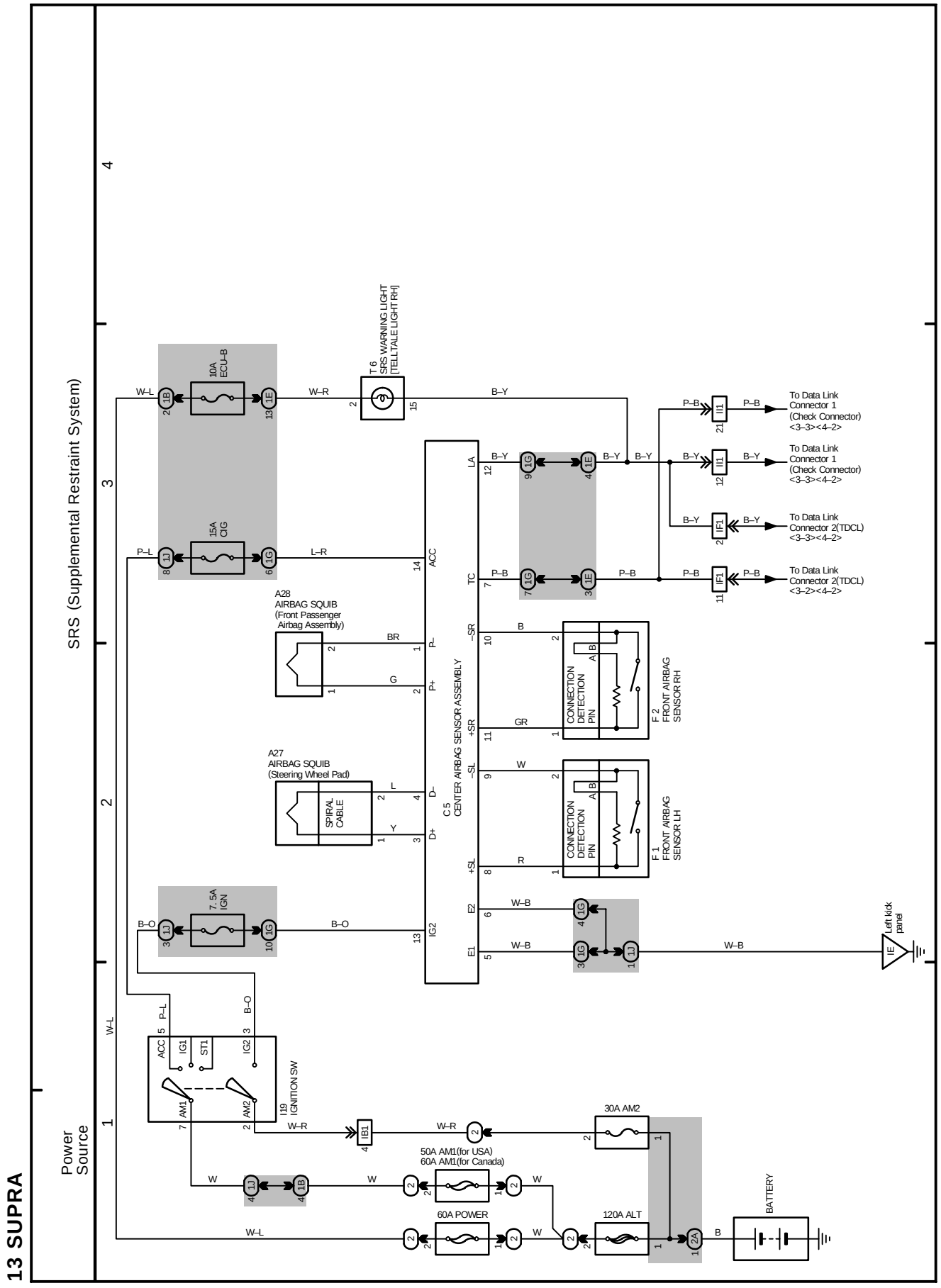

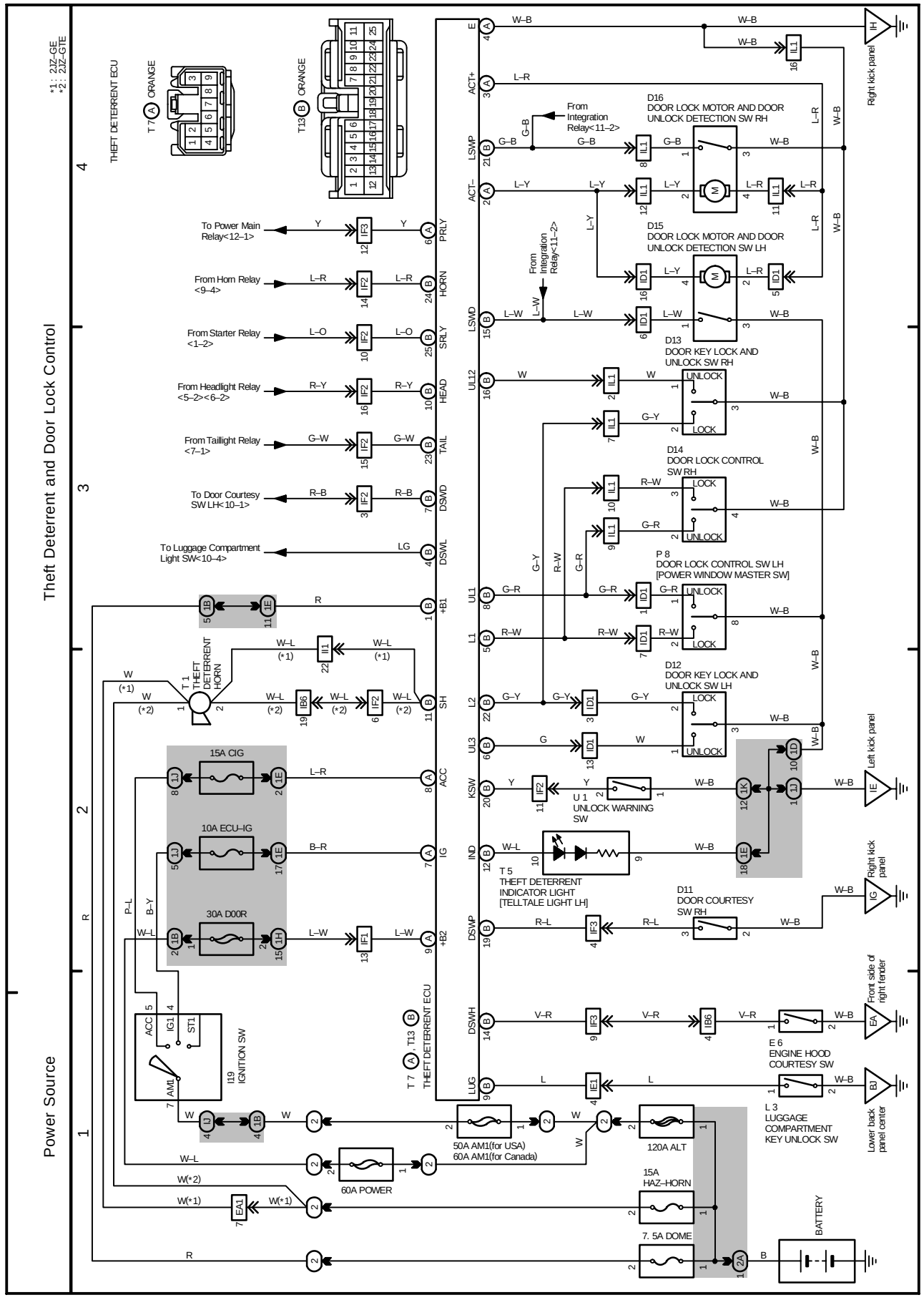
Power Source
Theft Deterrent and Door Lock Control
*1: 2JZ–GE
*2: 2JZ–GTE
THEFT DETERRENT ECU
T 7 (A) ORANGE
T13 (B) ORANGE
To Power Main Relay<12–1>
From Horn Relay <9–4>
From Starter Relay <1–2>
From Headlight Relay <5–2><6–2>
From Taillight Relay <7–1>
To Door Courtesy SW LH<10–1>
To Luggage Compartment Light SW<10–4>
From Integration Relay<11–2>
D16 DOOR LOCK MOTOR AND DOOR UNLOCK DETECTION SW RH
D15 DOOR LOCK MOTOR AND DOOR UNLOCK DETECTION SW LH
D13 DOOR KEY LOCK AND UNLOCK SW RH
D14 DOOR LOCK CONTROL SW RH
P 8 DOOR LOCK CONTROL SW LH [POWER WINDOW MASTER SW]
D12 DOOR KEY LOCK AND UNLOCK SW LH
D11 DOOR COURTESY SW RH
T 1 THEFT DETERRENT HORN
15A CIG
10A ECU–IG
30A D00R
I19 IGNITION SW
50A AM1(for USA) 60A AM1(for Canada)
120A ALT
60A POWER
15A HAZ–HORN
7. 5A DOME
BATTERY
U 1 UNLOCK WARNING SW
T 5 THEFT DETERRENT INDICATOR LIGHT [TELLTALE LIGHT LH]
E 6 ENGINE HOOD COURTESY SW
L 3 LUGGAGE COMPARTMENT KEY UNLOCK SW
Right kick panel
Left kick panel
Front side of right fender
Lower back panel center

OVERALL ELECTRICAL WIRING DIAGRAM

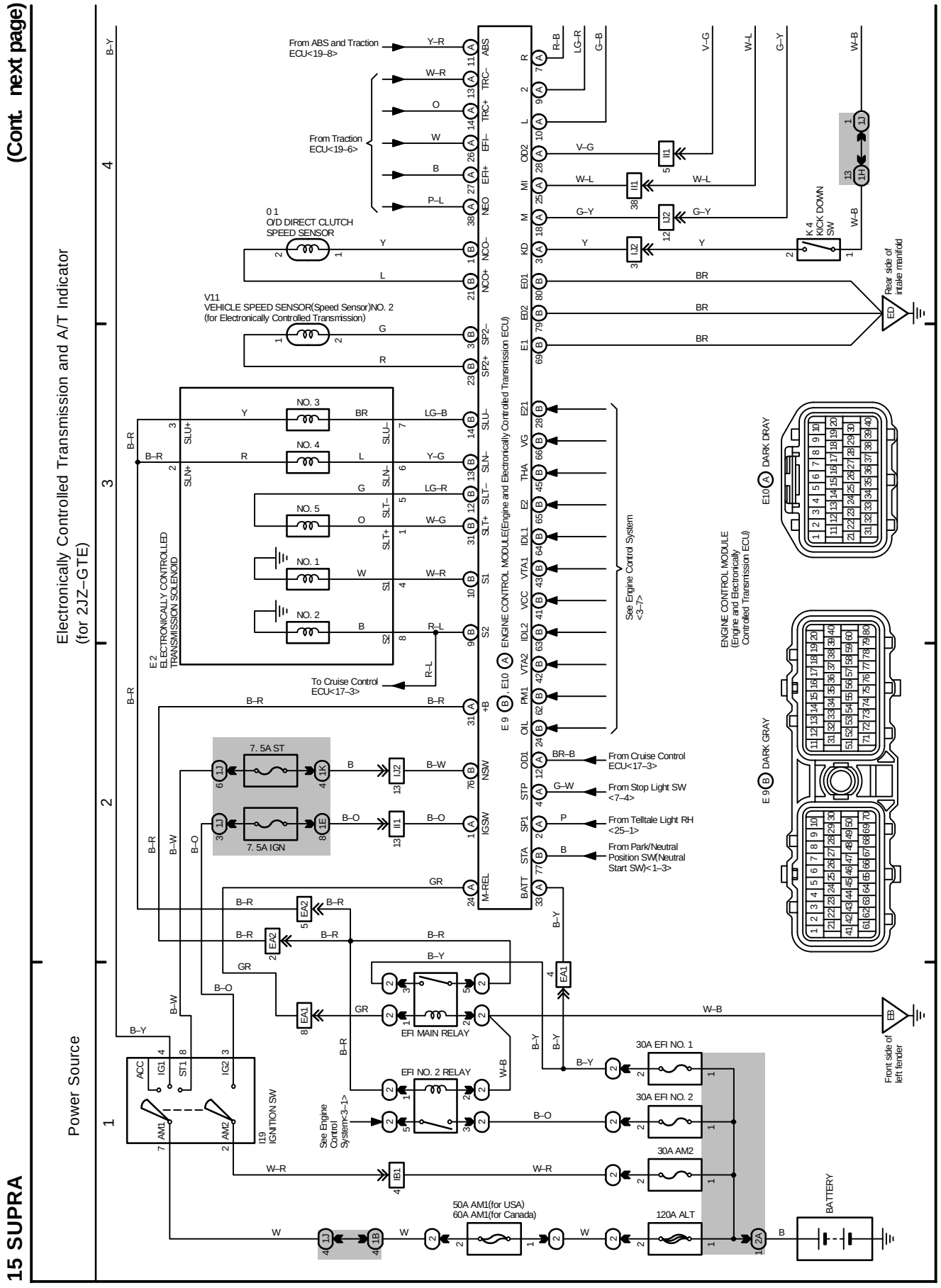

15 SUPRA (Cont' d)

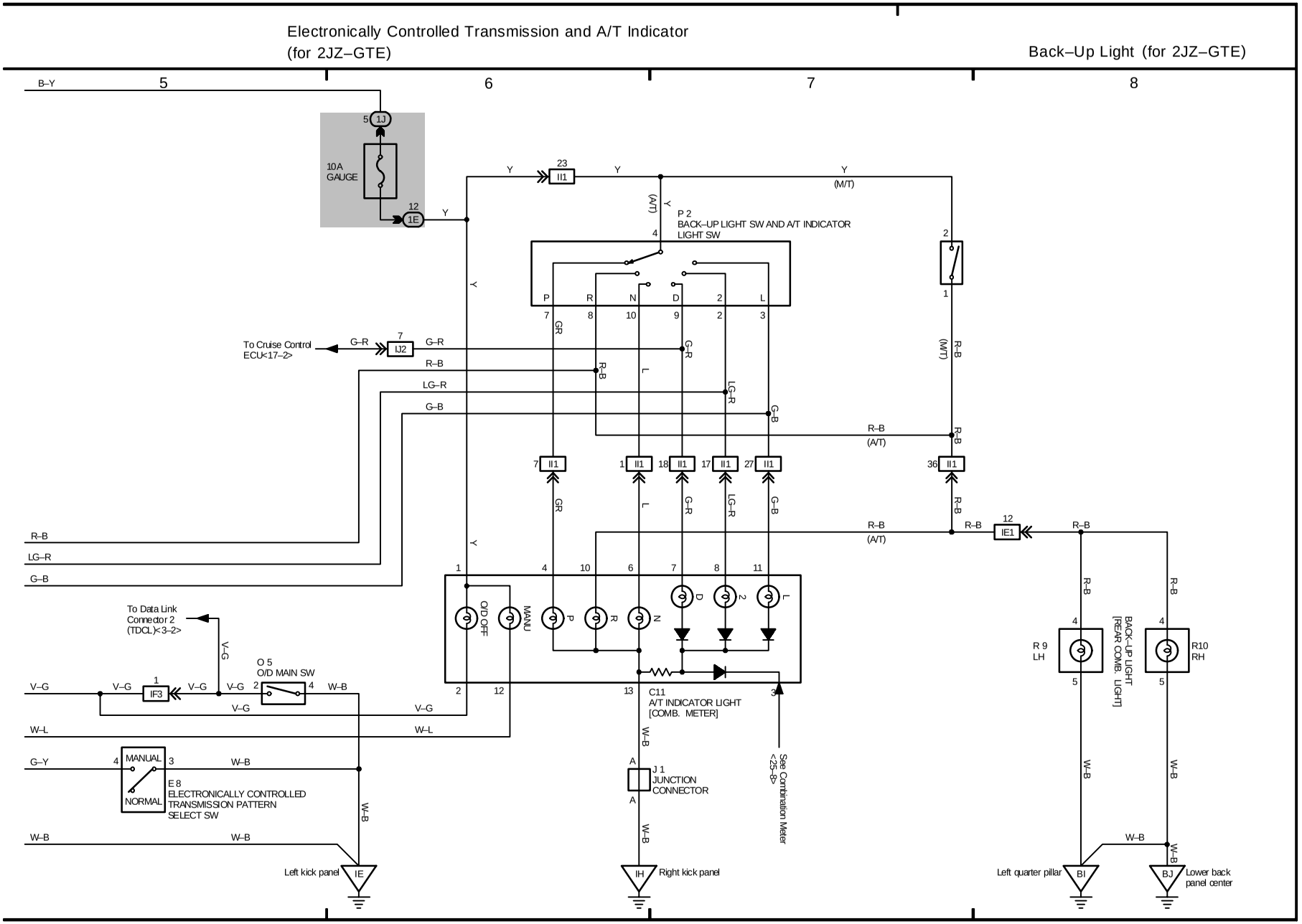

OVERALL ELECTRICAL WIRING DIAGRAM

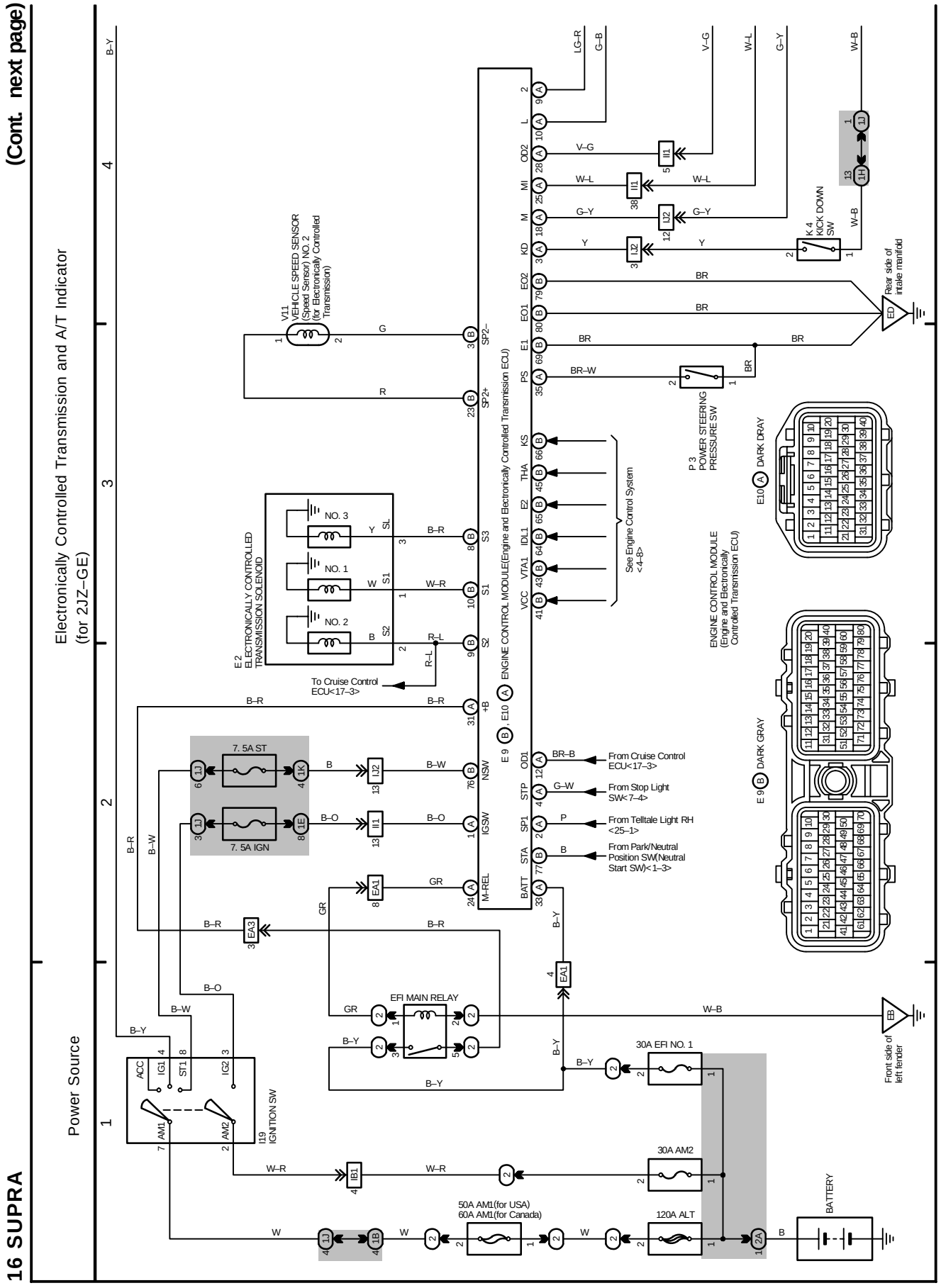

Electronically Controlled Transmission and A/T Indicator (for 2JZ–GE)

Back–Up Light (for 2JZ–GE)

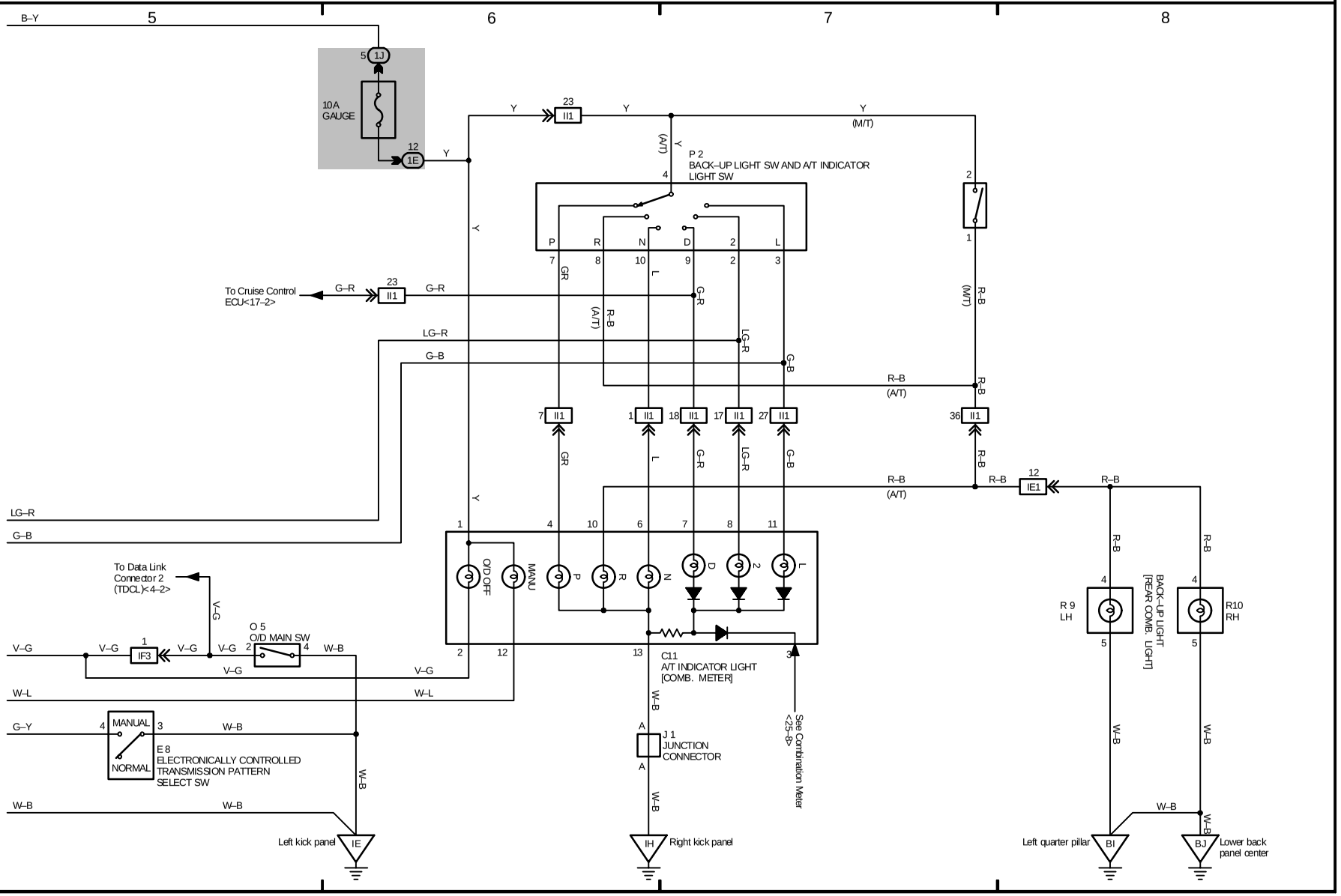

OVERALL ELECTRICAL WIRING DIAGRAM

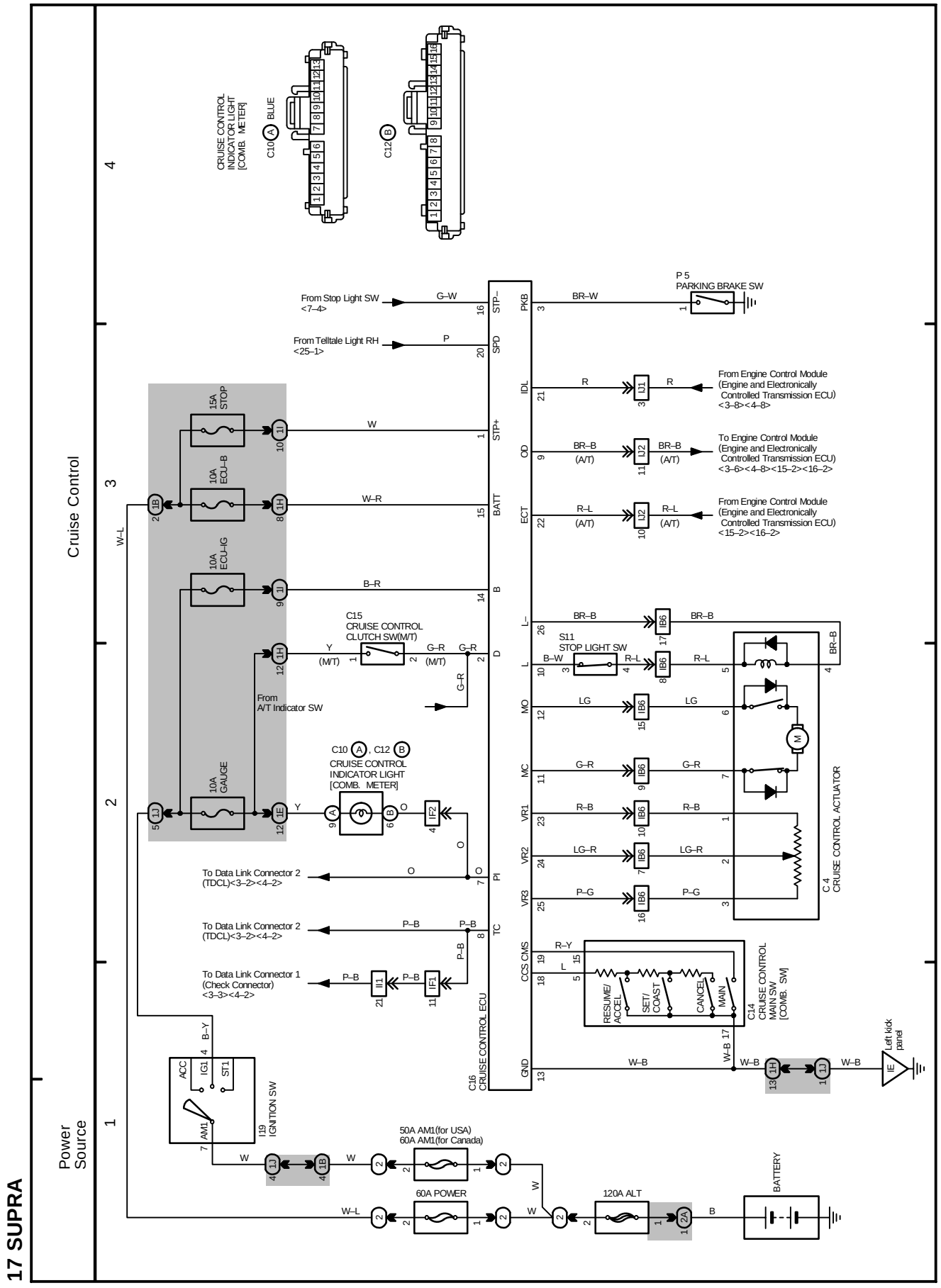

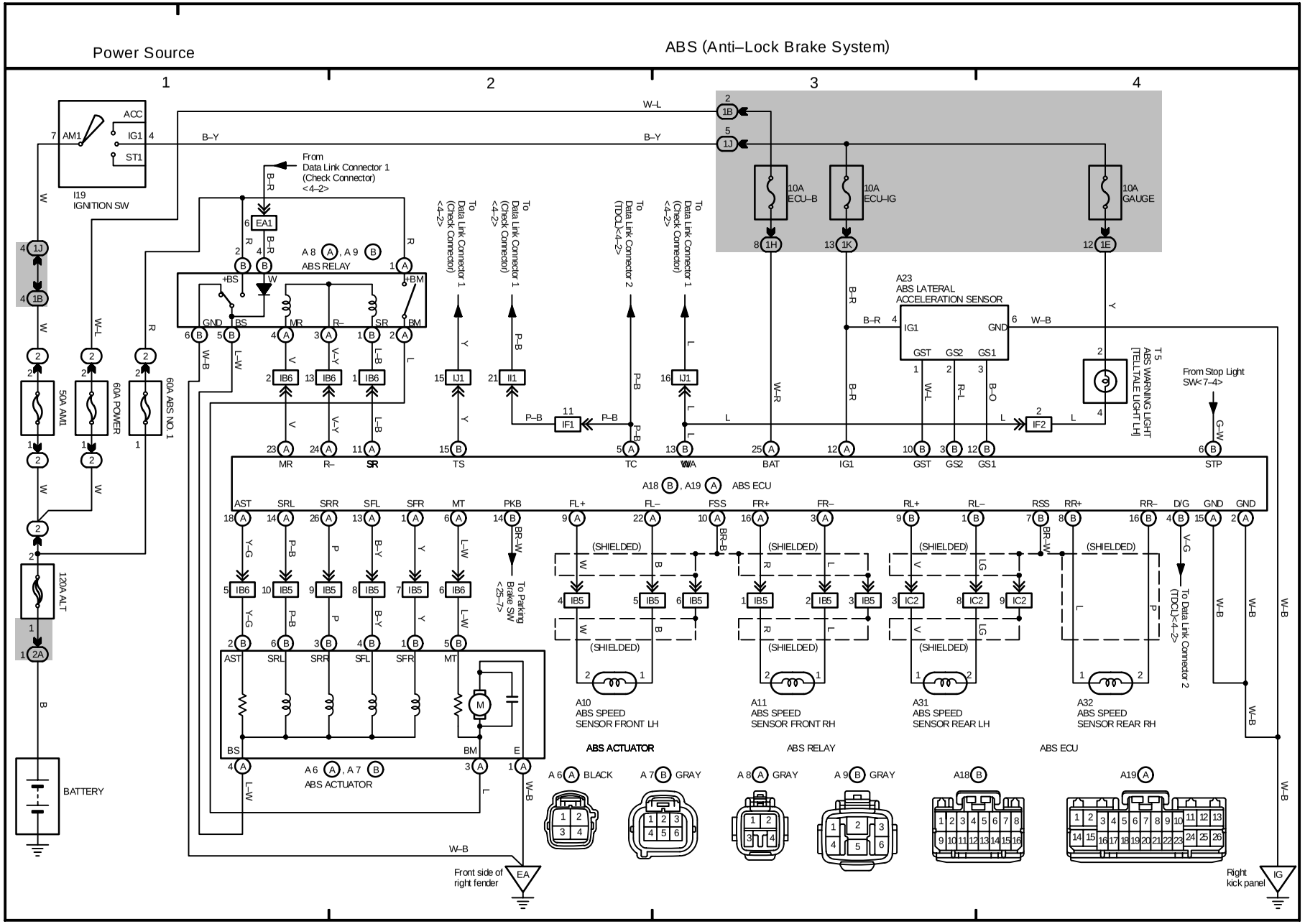
Power Source
ABS (Anti–Lock Brake System)
1
2
3
4
I19
IGNITION SW
ACC
AM1
IG1
ST1
BATTERY
50A AM1
60A POWER
60A ABS NO. 1
120A ALT
10A
ECU–B
10A
ECU–IG
10A
GAUGE
ABS RELAY
A 8 , A 9
From
Data Link Connector 1
(Check Connector)
<4–2>
To
Data Link Connector 1
(Check Connector)
<4–2>
To
Data Link Connector 2
(TDCL)<4–2>
A23
ABS LATERAL
ACCELERATION SENSOR
IG1
GND
GST
GS2
GS1
T5
ABS WARNING LIGHT
[TELLTALE LIGHT LH]
From Stop Light
SW<7–4>
MR
R–
SR
TS
TC
BAT
IG1
GST
GS2
GS1
STP
A18 , A19
ABS ECU
AST
SRL
SRR
SFL
SFR
MT
PKB
FL+
FL–
FSS
FR+
FR–
RL+
RL–
RSS
RR+
RR–
D/G
GND
GND
To Parking
Brake SW
<25–7>
To Data Link Connector 2
(TDCL)<4–2>
(SHIELDED)
A10
ABS SPEED
SENSOR FRONT LH
A11
ABS SPEED
SENSOR FRONT RH
A31
ABS SPEED
SENSOR REAR LH
A32
ABS SPEED
SENSOR REAR RH
ABS ACTUATOR
A 6 , A 7
ABS ACTUATOR
BS
BM
E
A 6 BLACK
A 7 GRAY
A 8 GRAY
A 9 GRAY
A18
A19
ABS RELAY
ABS ECU
Front side of
right fender
Right
kick panel
EA
IG

OVERALL ELECTRICAL WIRING DIAGRAM

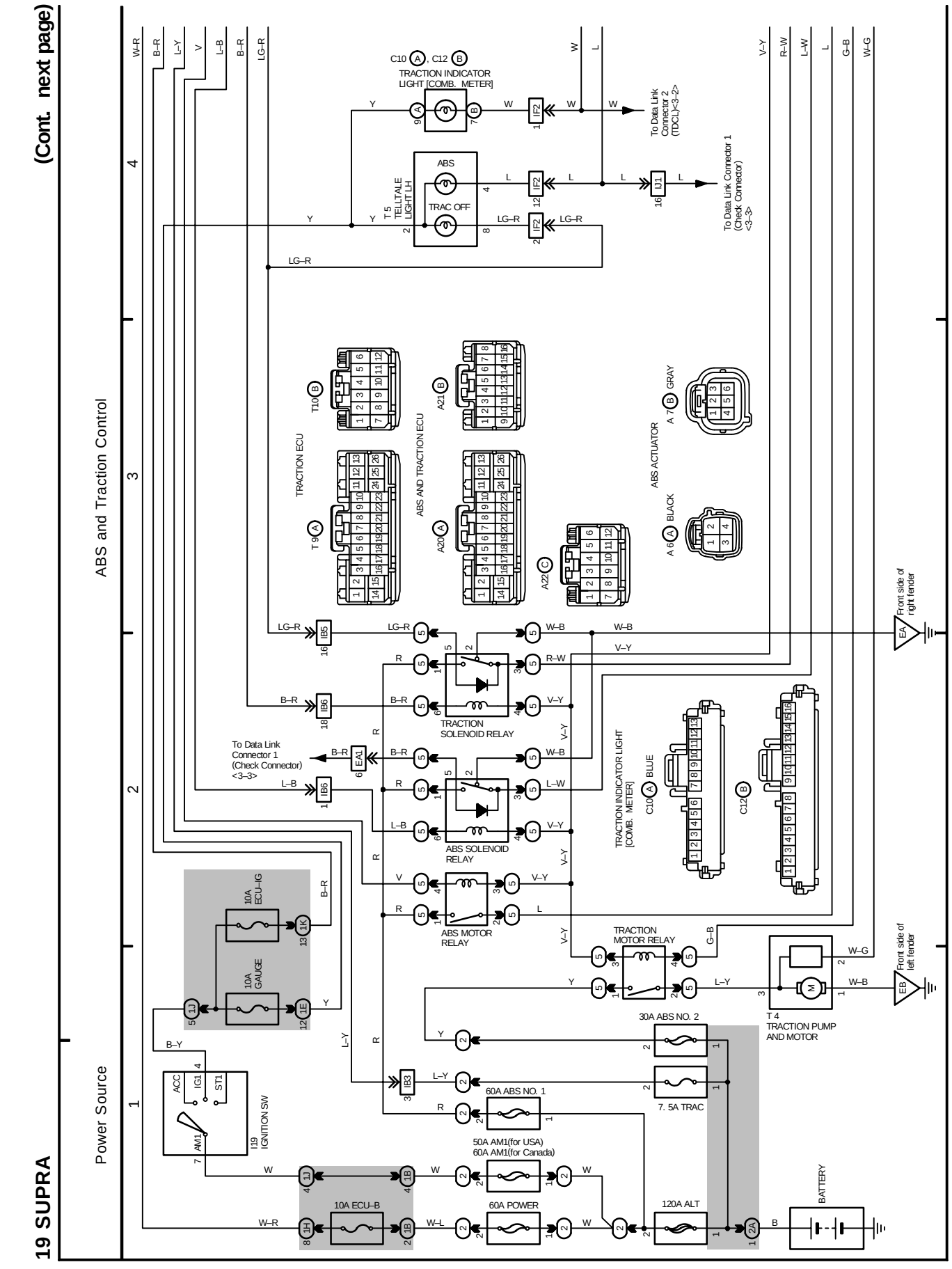

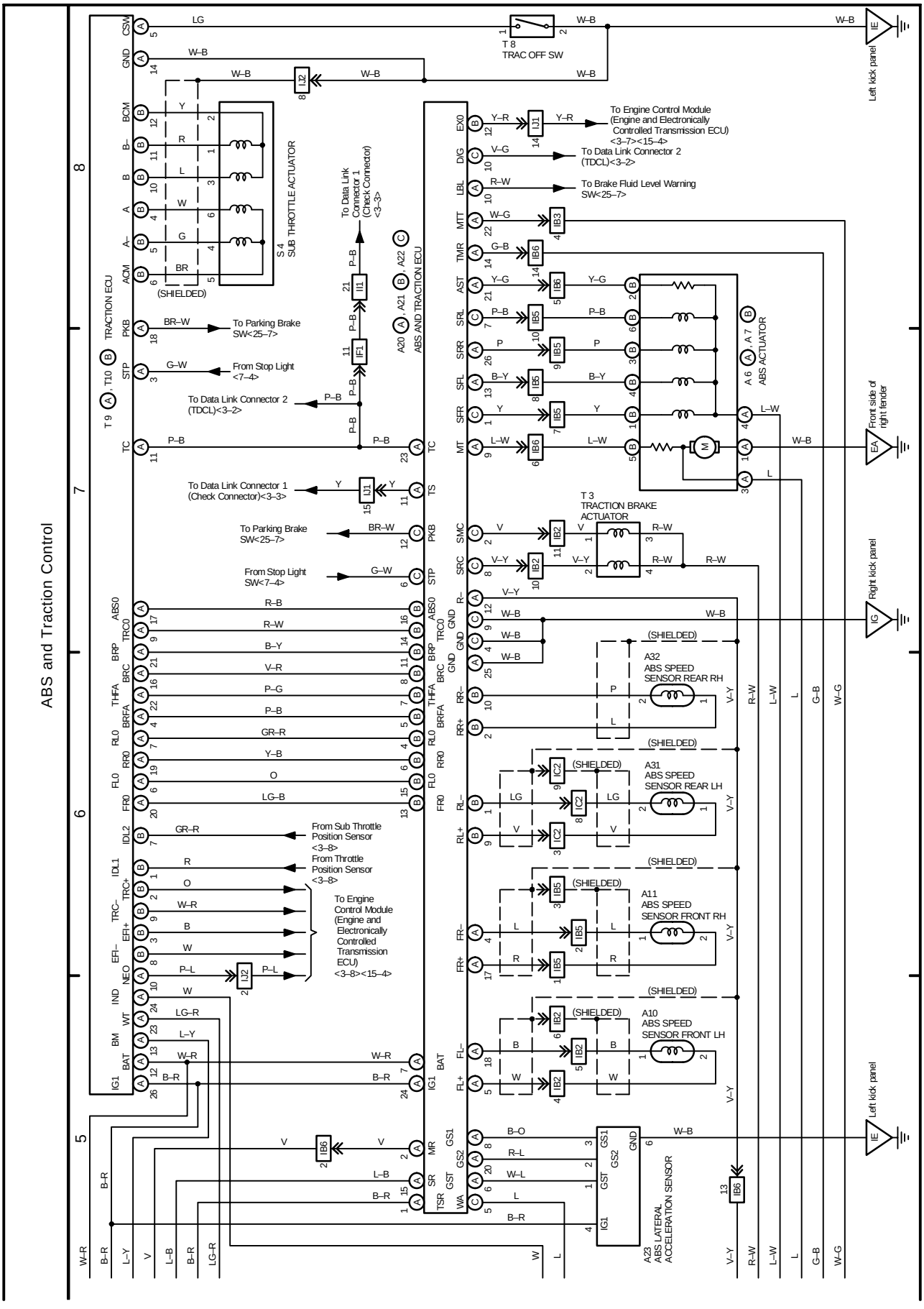
ABS and Traction Control
TRACTION ECU
ABS AND TRACTION ECU
T 8
TRAC OFF SW
Left kick panel
To Engine Control Module (Engine and Electronically Controlled Transmission ECU) <3–7><15–4>
To Data Link Connector 2 (TDCL)<3–2>
To Brake Fluid Level Warning SW<25–7>
S 4
SUB THROTTLE ACTUATOR
(SHIELDED)
To Data Link Connector 1 (Check Connector) <3–3>
To Parking Brake SW<25–7>
From Stop Light <7–4>
To Data Link Connector 2 (TDCL)<3–2>
To Data Link Connector 1 (Check Connector)<3–3>
To Parking Brake SW<25–7>
From Stop Light SW<7–4>
T 3
TRACTION BRAKE ACTUATOR
A 6 , A 7
ABS ACTUATOR
Front side of right fender
Right kick panel
A32
ABS SPEED SENSOR REAR RH
A31
ABS SPEED SENSOR REAR LH
A11
ABS SPEED SENSOR FRONT RH
A10
ABS SPEED SENSOR FRONT LH
From Sub Throttle Position Sensor <3–8>
From Throttle Position Sensor <3–8>
To Engine Control Module (Engine and Electronically Controlled Transmission ECU) <3–8><15–4>
A23
ABS LATERAL ACCELERATION SENSOR

OVERALL ELECTRICAL WIRING DIAGRAM

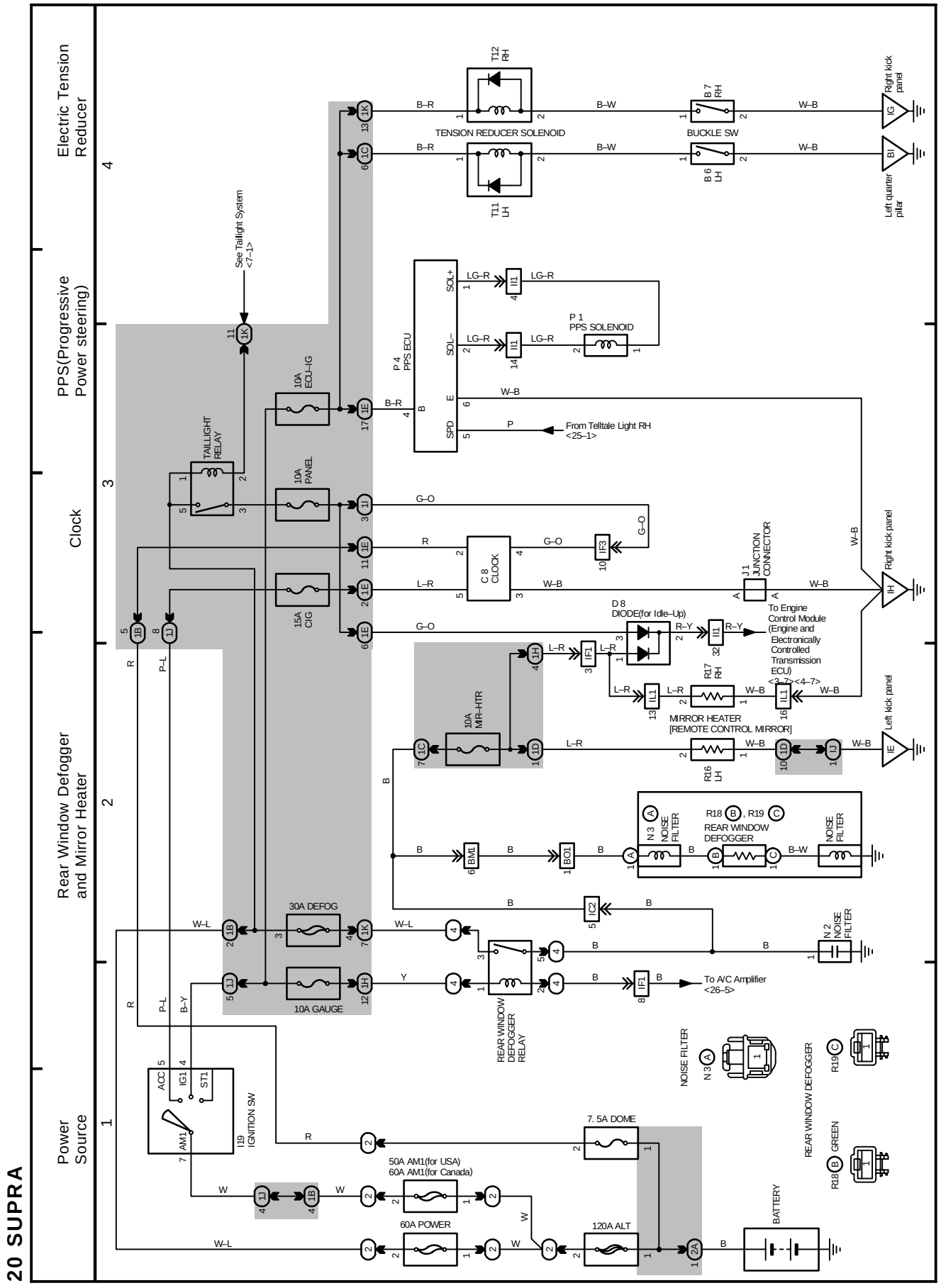

21 SUPRA

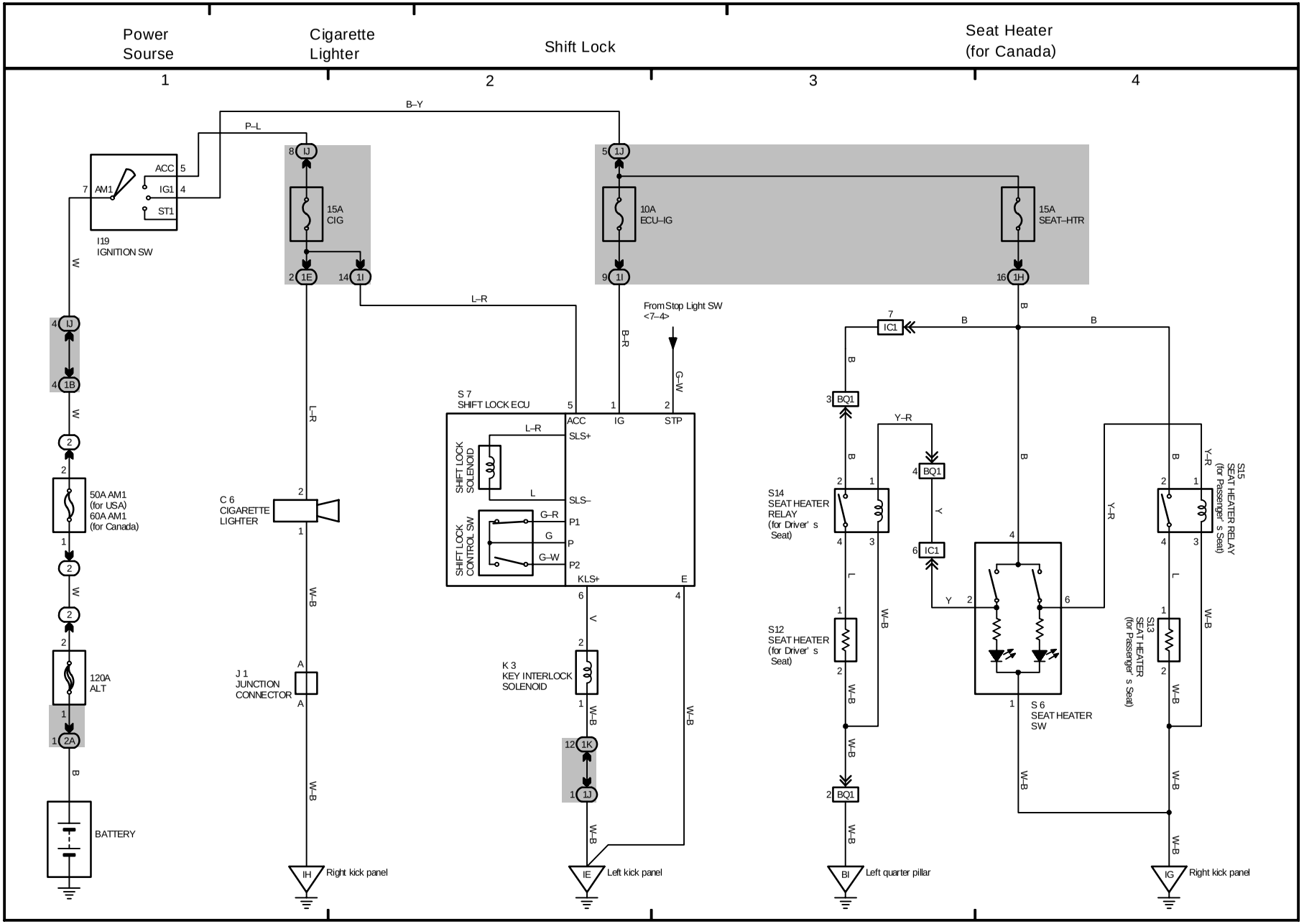
Power Sourse
Cigarette Lighter
Shift Lock
Seat Heater (for Canada)
1
2
3
4
B–Y
P–L
ACC
IG1
ST1
AM1
I19
IGNITION SW
15A
CIG
10A
ECU–IG
15A
SEAT–HTR
W
L–R
From Stop Light SW
<7–4>
B–R
G–W
S 7
SHIFT LOCK ECU
ACC
IG
STP
SLS+
SLS–
KLS+
SHIFT LOCK SOLENOID
SHIFT LOCK CONTROL SW
G–R
P1
G
P
G–W
P2
50A AM1
(for USA)
60A AM1
(for Canada)
120A
ALT
BATTERY
C 6
CIGARETTE LIGHTER
J 1
JUNCTION CONNECTOR
K 3
KEY INTERLOCK SOLENOID
W–B
V
IC1
BQ1
Y–R
Y
S14
SEAT HEATER RELAY
(for Driver' s Seat)
S12
SEAT HEATER
(for Driver' s Seat)
S 6
SEAT HEATER SW
S13
SEAT HEATER
(for Passenger' s Seat)
S15
SEAT HEATER RELAY
(for Passenger' s Seat)
Right kick panel
Left kick panel
Left quarter pillar
Right kick panel

OVERALL ELECTRICAL WIRING DIAGRAM

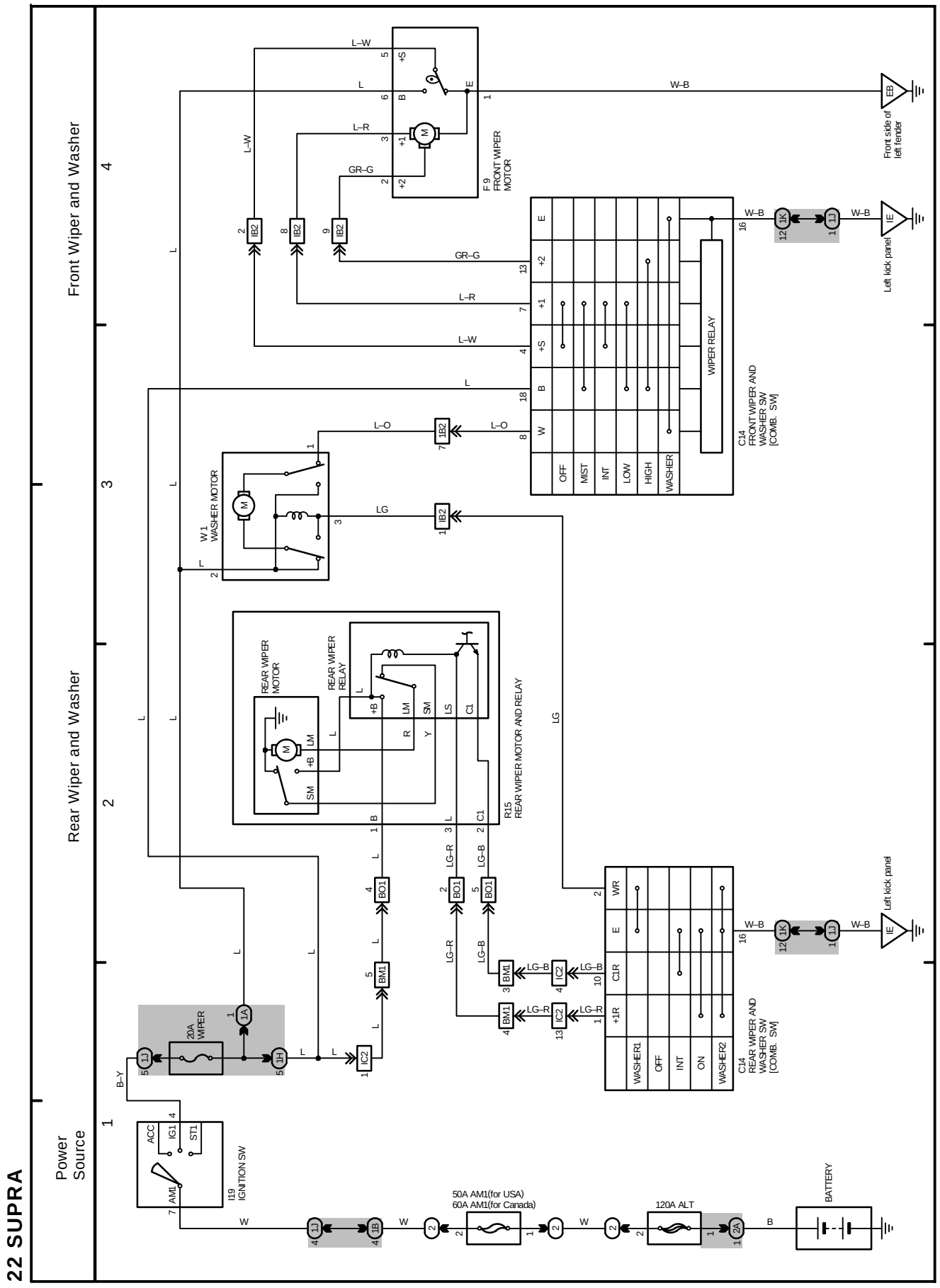

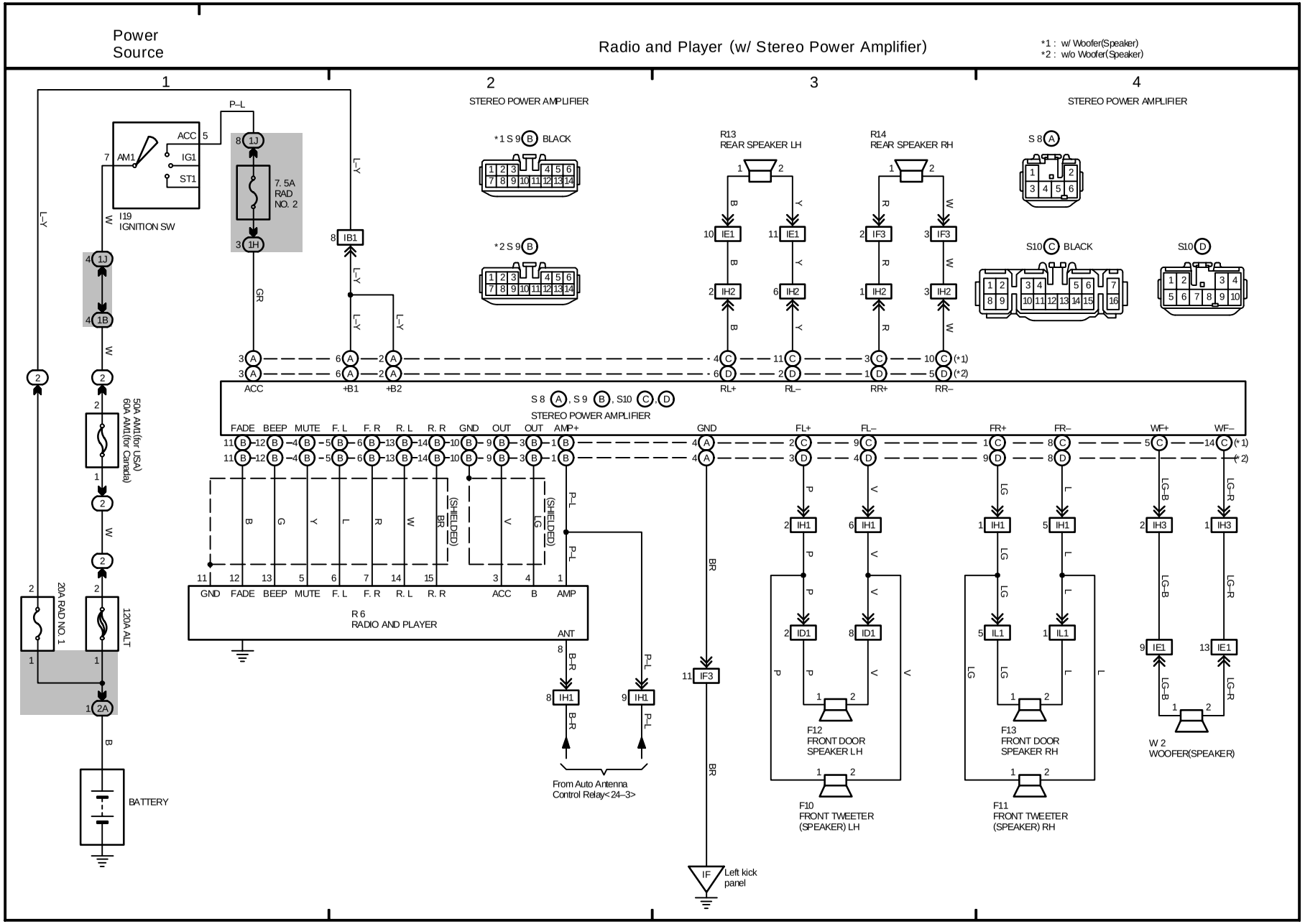
Power Source
Radio and Player (w/ Stereo Power Amplifier)
*1 : w/ Woofer(Speaker)
*2 : w/o Woofer(Speaker)
1
2
3
4
STEREO POWER AMPLIFIER
STEREO POWER AMPLIFIER
P–L
ACC
IG1
ST1
AM1
I19
IGNITION SW
7.5A
RAD
NO. 2
L–Y
W
GR
*1 S9 B BLACK
*2 S9 B
R13
REAR SPEAKER LH
R14
REAR SPEAKER RH
S8 A
S10 C BLACK
S10 D
ACC
+B1
+B2
RL+
RL–
RR+
RR–
S8 A, S9 B, S10 C, D
STEREO POWER AMPLIFIER
FADE BEEP MUTE F. L F. R R. L R. R GND OUT OUT AMP+
GND FL+ FL– FR+ FR– WF+ WF–
50A AM1(for USA)
60A AM1(for Canada)
20A RAD NO. 1
120A ALT
BATTERY
R6
RADIO AND PLAYER
GND FADE BEEP MUTE F. L F. R R. L R. R ACC B AMP
ANT
(SHIELDED)
P–L
B–R
From Auto Antenna
Control Relay<24–3>
F12
FRONT DOOR
SPEAKER LH
F13
FRONT DOOR
SPEAKER RH
F10
FRONT TWEETER
(SPEAKER) LH
F11
FRONT TWEETER
(SPEAKER) RH
W 2
WOOFER(SPEAKER)
IF
Left kick
panel

OVERALL ELECTRICAL WIRING DIAGRAM

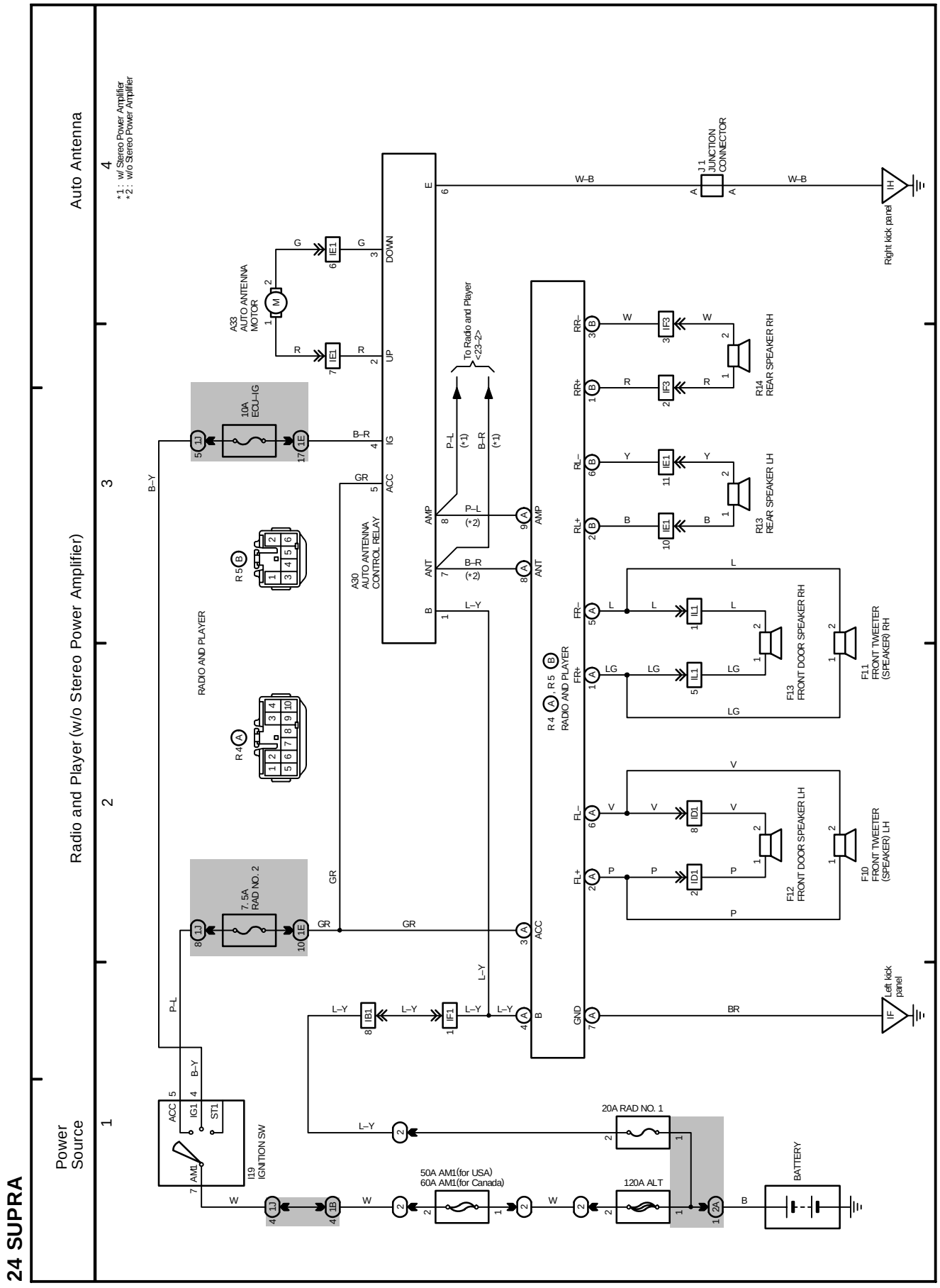

OVERALL ELECTRICAL WIRING DIAGRAM

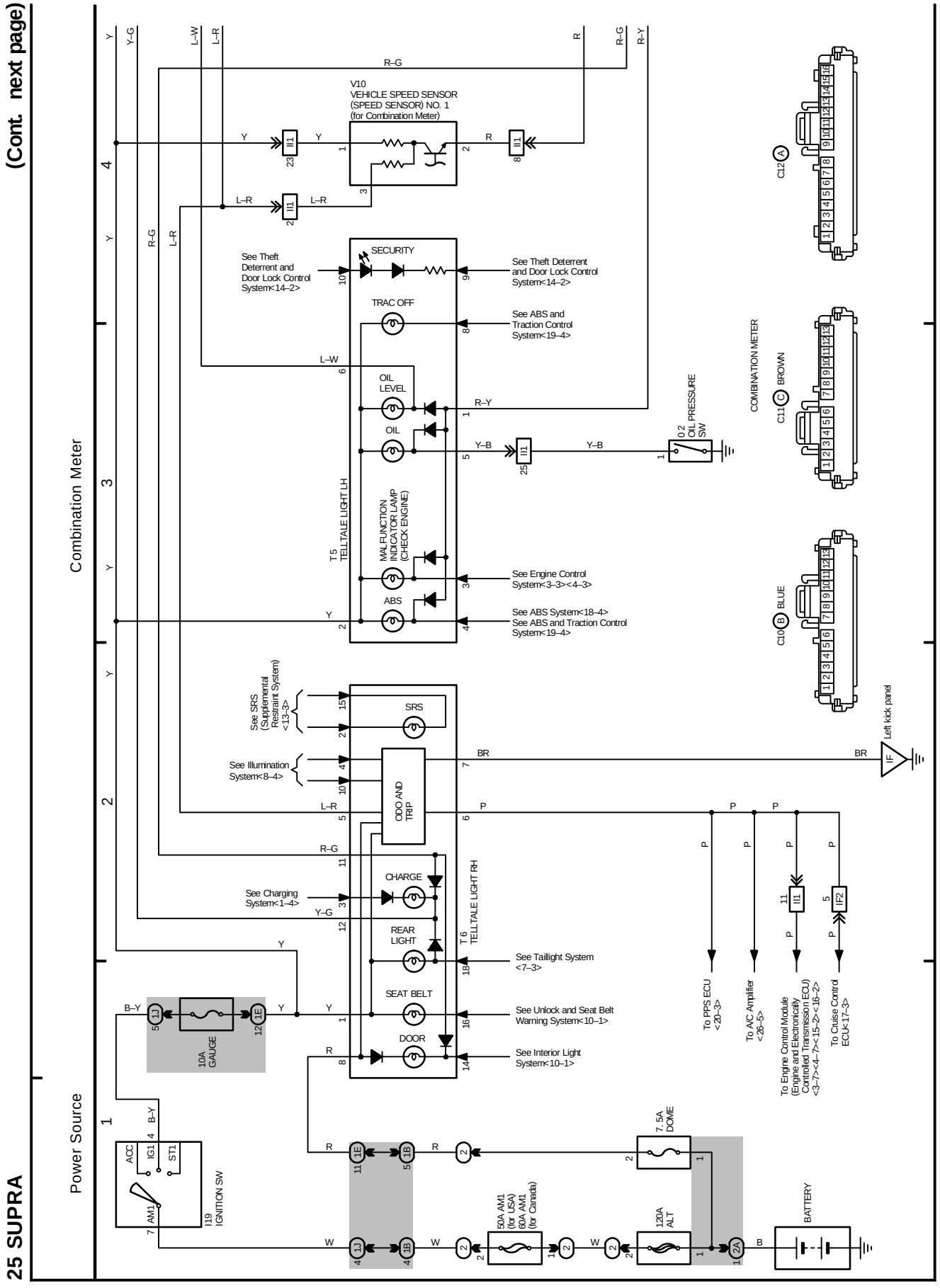

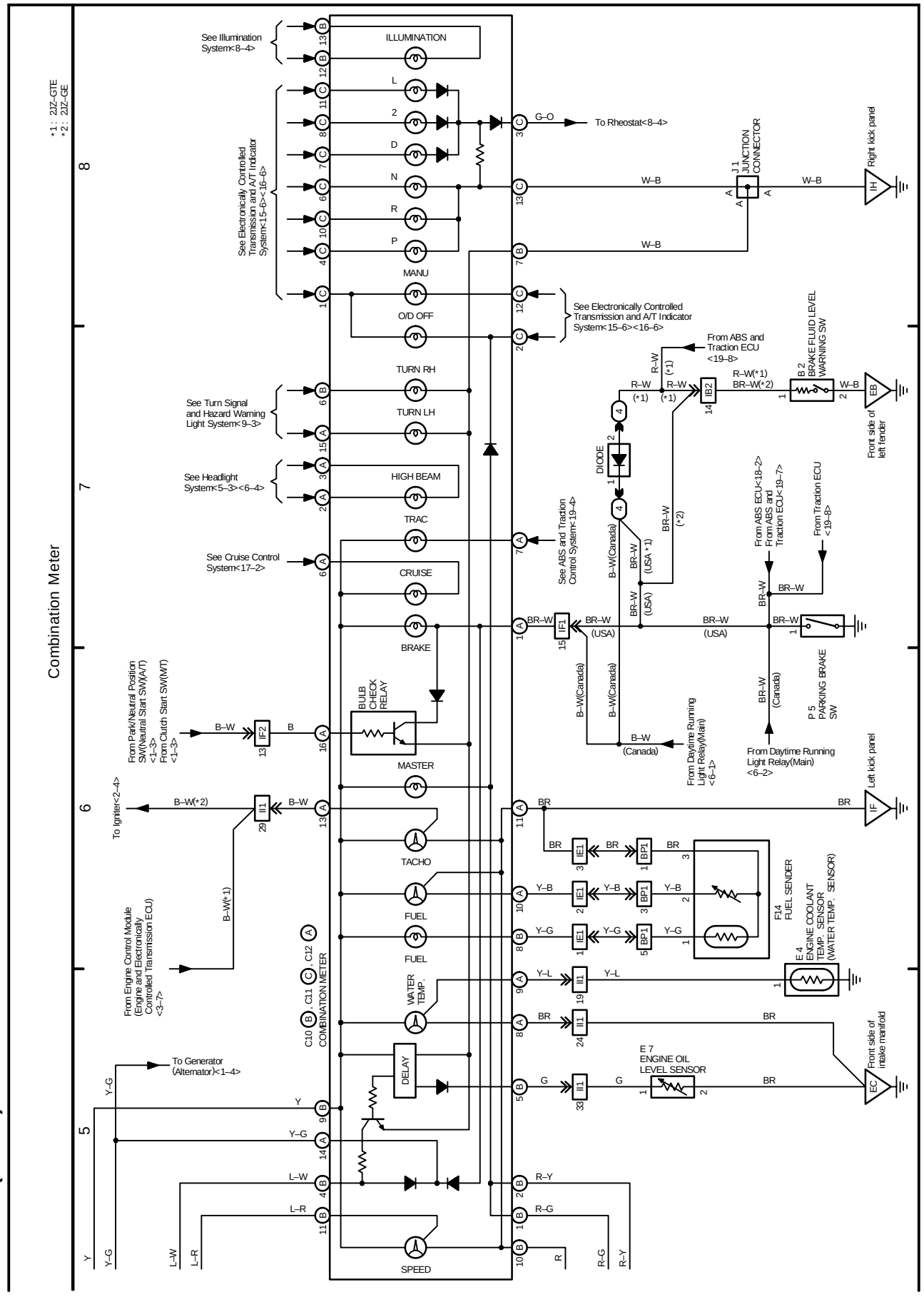
Combination Meter
*1: 2JZ-GTE
*2: 2JZ-GE
ILLUMINATION
See Illumination System<8–4>
See Electronically Controlled Transmission and A/T Indicator System<15–6><16–6>
L
2
D
N
R
P
MANU
O/D OFF
TURN RH
TURN LH
See Turn Signal and Hazard Warning Light System<9–3>
See Headlight System<5–3><6–4>
HIGH BEAM
TRAC
See Cruise Control System<17–2>
CRUISE
BRAKE
BULB CHECK RELAY
MASTER
TACHO
FUEL
FUEL
WATER TEMP.
SPEED
DELAY
To Rheostat<8–4>
See Electronically Controlled Transmission and A/T Indicator System<15–6><16–6>
J 1 JUNCTION CONNECTOR
Right kick panel
From ABS and Traction ECU <19–8>
B 2 BRAKE FLUID LEVEL WARNING SW
Front side of left fender
DIODE
See ABS and Traction Control System<19–4>
From ABS ECU<18–2>
From ABS and Traction ECU<19–7>
From Traction ECU <19–8>
P 5 PARKING BRAKE SW
From Daytime Running Light Relay(Main) <6–1>
From Daytime Running Light Relay(Main) <6–2>
Left kick panel
F14 FUEL SENDER
E 4 ENGINE COOLANT TEMP. SENSOR (WATER TEMP. SENSOR)
E 7 ENGINE OIL LEVEL SENSOR
Front side of intake manifold
From Park/Neutral Position SW(Neutral Start SW(A/T) <1–3> From Clutch Start SW(M/T) <1–3>
To Igniter<2–4>
From Engine Control Module (Engine and Electronically Controlled Transmission ECU) <3–7>
To Generator (Alternator)<1–4>
C10 (B), C11 (C), C12 (A) COMBINATION METER
W–B
G–O
R–W
BR–W
B–W
Y–B
Y–G
Y–L
R–Y
R–G
L–W
L–R
BR
G
Y
R

OVERALL ELECTRICAL WIRING DIAGRAM

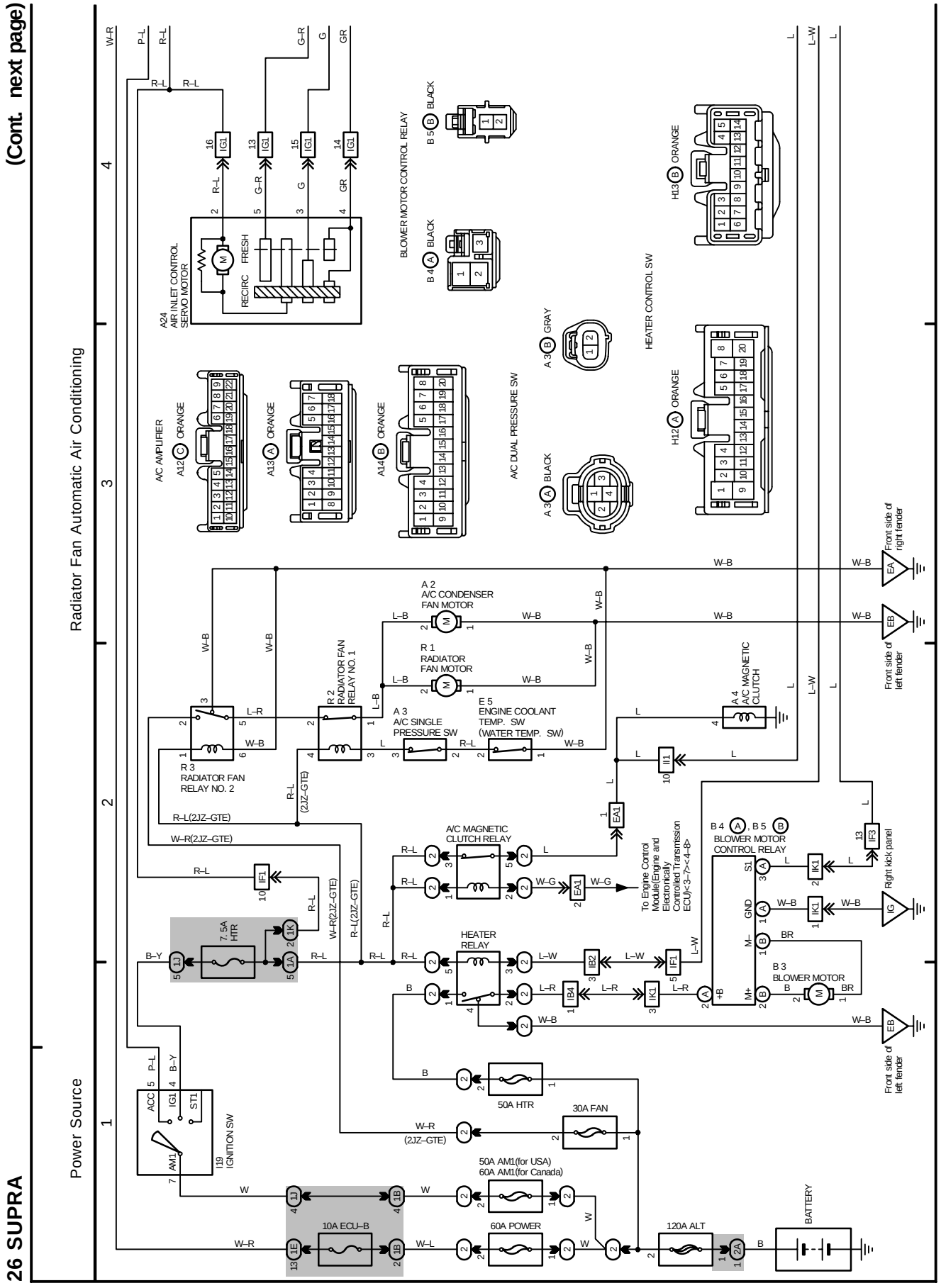

26 SUPRA (Cont' d)

